ELECTRICAL SITE PLAN

SCALE: APPROX. 1" = 30'

POWER LEGEND

- DUPLEX RECEPTACLE, INSTALL AT 18" AFF UNO
  - +48 = INSTALL AT 48" AFF
  - +60 = INSTALL AT 60" AFF
  - TV = INSTALL AT 72" AFF, UNO
  - * = INSTALL 6" ABOVE COUNTER OR DESK
  - REF = DEDICATED FOR REFRIGERATOR
  - M/W = DEDICATED FOR MICROWAVE
  - COFF = DEDICATED FOR COFFEE POT
- DUPLEX RECEPTACLE, GFI
  - WP = WEATHERPROOF
- CEILING DUPLEX RECEPTACLE
- DOUBLE DUPLEX RECEPTACLES
- DOUBLE DUPLEX GFI RECEPTACLES
- CEILING DOUBLE DUPLEX RECEPTACLES
- SINGLE RECEPTACLE
- SPECIAL RECEPTACLE AS NOTED
- POWER FLOOR OUTLET
- POWER/TELECOM FLOOR BOX
- JUNCTION BOX
- DISCONNECT SWITCH
- STARTER/DISCONNECT SWITCH
- STARTER OR CONTACTOR
- VARIABLE FREQUENCY/SPEED DRIVE
- MANUAL MOTOR STARTER WITH THERMAL OVERLOAD PROTECTION
- PANELBOARD
- ELECTRIC MOTOR
- UTILITY METER
- HOMERUN
- CIRCUIT CONTINUATION
- CONDUIT CONCEALED IN WALL OR CEILING
- CONDUIT UNDERGROUND OR IN FLOOR
- DRIVEN GROUND ROD
- GROUND INSPECTION WELL
- CIRCUIT BREAKER
- FUSE
- SWITCH
- KEYNOTE SYMBOL
- INTERCEPT LOCATION
- CONCRETE-FILLED PIPE BOLLARD
- DRAWOUT CIRCUIT BREAKER
- LIGHTING PROTECTION AIR TERMINAL
- LIGHTNING PROTECTION CONDUCTOR
- REVISION SYMBOL
- EMERGENCY PUSH BUTTON

LIGHTING LEGEND

- 2'X4' LIGHT FIXTURE
  - UPPERCASE LETTER = FIXTURE TYPE
  - LOWERCASE LETTER = SWITCH CIRCUIT
- 2'X2' LIGHT FIXTURE
- WALL-MOUNTED LINEAR FIXTURE
- SURFACE-MOUNTED STRIP FIXTURE
- TRACK LIGHTING
- STRIP OR TAP LIGHTING
- RECESSED CAN LIGHT
- HANGING PENDANT FIXTURE
- SURFACE-MOUNTED CIRCULAR FIXTURE
- WALL-MOUNTED SCONCE OR WALL-PACK
- EMERGENCY LIGHT, WALL-MOUNTED
- EMERGENCY LIGHT, CEILING-MOUNTED
- EXIT SIGN, WALL/CEILING-MOUNTED, CHEVRON DIRECTION INDICATED BY ARROWS
- EXIT SIGN AND EMERGENCY LIGHT, WALL/CEILING-MOUNTED
- OCCUPANCY SENSOR, WALL/CEILING-MOUNTED, DUAL TECHNOLOGY TYPE, UNO
- PHOTOCELL
- LIGHT SWITCH
  - 3 = 3-WAY
  - 4 = 4-WAY
  - D = 0-10V DIMMER, UNO
- COMBINATION WALL-SWITCH/OCCUPANCY SENSOR
- CHANDELIER
- CEILING FAN

SYSTEMS LEGEND

- TELECOM OUTLET, INSTALL AT 18", UNO
- TELECOM FLOOR OUTLET
- TV OUTLET, INSTALL AT 72" AFF, UNO
- SPEAKER
- CAMERA
- ANTENNA

ABBREVIATIONS

A	AMPERE
AC	ABOVE COUNTER
AFC	AVAILABLE FAULT CURRENT
AFF	ABOVE FINISHED FLOOR
AFG	ABOVE FINISHED GRADE
AH	AIR HANDLER
AHJ	AUTHORITY HAVING JURISDICTION
AHU	AIR HANDLING UNIT
AWG	AMERICAN WIRE GAUGE
BFG	BELOW FINISHED GRADE
BJ	BONDING JUMPER
BKR	BREAKER
BLDG	BUILDING
C	CONDUIT
CKT	CIRCUIT
CLG	CEILING
CONC	CONCRETE
COORD	COORDINATE
CPT	CONTROL POWER TRANSFORMER
CRI	COLOR RENDITION INDEX
CTRL	CONTROL
Cu	COPPER
CU	CONDENSING UNIT
DEF	DIESEL EXHAUST FUEL
DISC	DISCONNECT
DISP	DISPENSER
DGR	DRIVEN GROUND ROD
EA	EACH
EBJ	EQUIPMENT BONDING JUMPER
EF	EXHAUST FAN
EGC	EQUIPMENT GROUNDING CONDUCTOR
EJ	EXPANSION JOINT
EM	EMERGENCY
ENCL	ENCLOSURE, ENCLOSED
ETR	EXISTING TO REMAIN
EWC	ELECTRIC WATER COOLER
EWH	ELECTRIC WATER HEATER
EX	EXISTING
EXIST	EXISTING
FA	FIRE ALARM
FACP	FIRE ALARM CONTROL PANEL
FMP	FUEL MONITORING PANEL
G, GND	GROUND
GEC	GROUNDING ELECTRODE CONDUCTOR
GFI	GROUND FAULT INTERRUPT
GWB	GYPSUM WALL BOARD
HD	HEAVY DUTY
HOA	HAND-OFF-AUTO
I.S.	INTRINSICALLY SAFE
JB	JUNCTION BOX
K	KELVIN
KVA	KILO-VOLT AMPERE
KW	KILO-WATT
LED	LIGHT EMITTING DIODE
LFMC	LIQUIDTIGHT FLEXIBLE METAL CONDUIT
LTG	LIGHTING
LTS	LIGHTS
MBJ	MAIN BONDING JUMPER
MCB	MAIN CIRCUIT BREAKER
MIN	MINIMUM
MLO	MAIN LUGS ONLY
MTD	MOUNTED
N	NEUTRAL
NEC	NATIONAL ELECTRICAL CODE
NF	NON-FUSED
NL	NIGHT LIGHT
NS	NOT SWITCHED
NTS	NOT TO SCALE
OAE	OR APPROVED EQUAL
OE	OR EQUAL
OEM	ORIGINAL EQUIPMENT MANUFACTURER
OH	OVERHEAD
OL	OVERLOAD
P	POLE
PB	PULL BOX
PC	PHOTOCELL
PP	PUSH PLATE
PH, Ø	PHASE
PNL	PANEL
PRI	PRIMARY
REC	RECEPTACLE
RECEPT	RECEPTACLE
REF	REFRIGERATOR
RGS	RIGID GALVANIZED STEEL
RTU	ROOFTOP UNIT
SBJ	SYSTEM BONDING JUMPER
SEC	SECONDARY
SPD	SURGE PROTECTIVE DEVICE
STP	SUBMERSIBLE TURBINE PUMP
SW	SWITCH
TC	TIMECLOCK
THD	TOTAL HARMONIC DISTORTION
TYP	TYPICAL
UG	UNDERGROUND
UNO	UNLESS NOTED OTHERWISE
V	VOLT
VA	VOLT-AMPERE
VAC	VOLTS ALTERNATING CURRENT
W	WIRE OR WATT
W/	WITH
WAP	WIRELESS ACCESS POINT
WP	WEATHERPROOF
WW	WIREWAY
XFMR	TRANSFORMER
XP	EXPLOSION PROOF
~	APPROXIMATELY
Δ	DELTA
§	SECTION
>	GREATER THAN
≥	GREATER THAN OR EQUAL TO
<	LESS THAN
≤	LESS THAN OR EQUAL TO

NOTE: NOT ALL SYMBOLS AND ABBREVIATIONS ARE USED

GENERAL NOTES

1. DIESEL CANOPY AND ASSOCIATED TANKS, DISPENSERS, AND LIGHTING WERE DESIGNED BY OTHERS (INFINITY). REFER TO DIESEL DRAWINGS FOR DETAILS. CONDUIT SEAL-OFF REQUIREMENTS ARE NOTED IN DIESEL DRAWINGS.
2. EXISTING ELECTRICAL SYSTEM IS FED FROM HIGH LEG OPEN DELTA SERVICE. CONTRACTOR SHALL ENSURE HIGH PHASE LEG IS DISTINCTLY AND PROPERLY IDENTIFIED THROUGHOUT SYSTEM - INCLUDING EXISTING AND NEW EQUIPMENT.

ELECTRICAL SHEET INDEX

E100	ELECTRICAL SITE PLAN, LEGEND, AND ABBREVIATIONS
E200	ELECTRICAL DEMO & NEW PLANS
E300	ELECTRICAL RISER DIAGRAMS
E400	ELECTRICAL PANEL SCHEDULES
E500	ELECTRICAL SPECIFICATIONS

COBURN AND ASSOCIATES, INC
MECHANICAL • ELECTRICAL • CONSULTING ENGINEERS
P.O. BOX 577
HIGH SPRINGS, FLORIDA
PH 386-454-3748
CELL 352-538-0163
CERTIFICATE OF AUTHORIZATION 3687

CHAD J. FRALICK LICENSE No 73811 STATE OF FLORIDA PROFESSIONAL ENGINEER

THIS ITEM HAS BEEN DIGITALLY SIGNED AND SEALED BY CHAD J. FRALICK, PE ON THE INDICATED DATE. USING A DIGITAL SIGNATURE AND SEAL. PRINTED COPIES OF THIS DOCUMENT ARE NOT CONSIDERED SIGNED AND SEALED AND THE SIGNATURE MUST BE VERIFIED ON ANY ELECTRONIC DOCUMENTS. IF THERE IS ANY DOUBT AS TO THE AUTHENTICITY OF THE DOCUMENT, THE ORIGINAL DOCUMENT MAY BE REQUESTED FROM THE ENGINEER OF RECORD.

Digitally signed by Chad J Fralick
Date: 2022.06.30 22:42:26 -04'00'

CA JOB NO. 2205	DRAWN KLL	APPROVED CJF	
DATE OF ISSUE	7/1/2022		
REVISIONS			

PROJECT TITLE AND LOCATION:

RENOVATIONS FOR
SUNSTOP STORE #303
1166 E DUVAL ST
LAKE CITY, FL 32055

SHEET TITLE:

ELECTRICAL LEGEND AND ABBREVIATIONS

E100

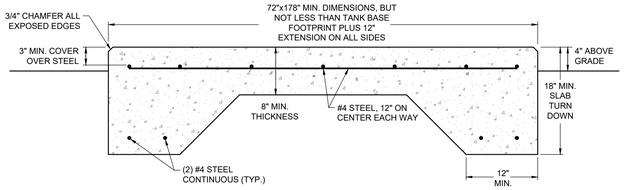

CONCRETE: 3000 PSI (28-DAY COMPRESSIVE STRENGTH), 4" SLUMP, MIX RATIO 1:2:3 (CEMENT:SAND:AGGREGATE).

ASSUMPTIONS:
GENERATOR PACKAGE DRY WEIGHT <4200LBS (150KW)
BASE TANK, FUEL, AND OILS <6000LBS
LOAD ON SOIL <2 PSI

GENERATOR PAD DETAIL

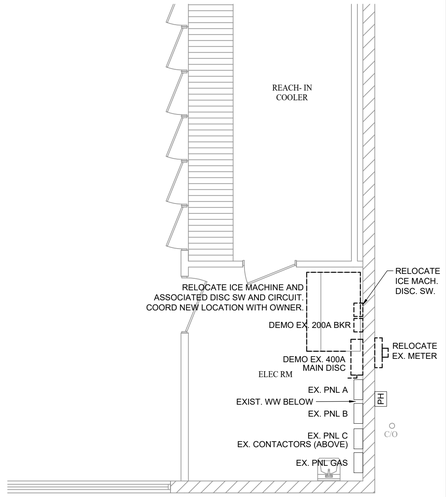

DEMO PLAN - ELEC RM AND GEN

SCALE: 1/4" = 1' - 0"

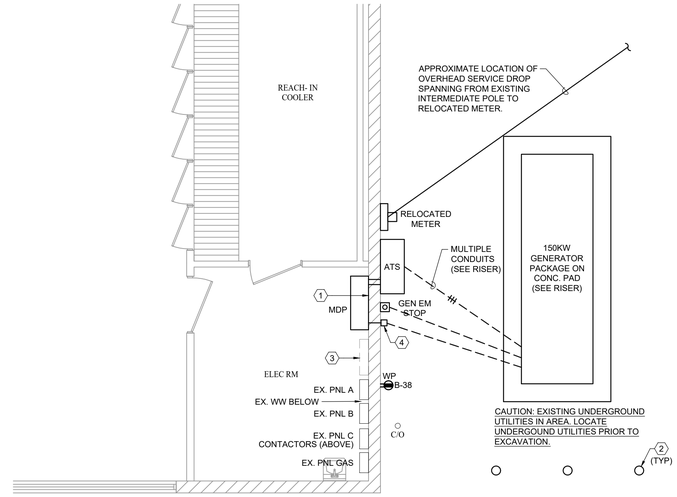

NEW WORK PLAN - ELEC RM AND GEN

SCALE: 1/4" = 1' - 0"

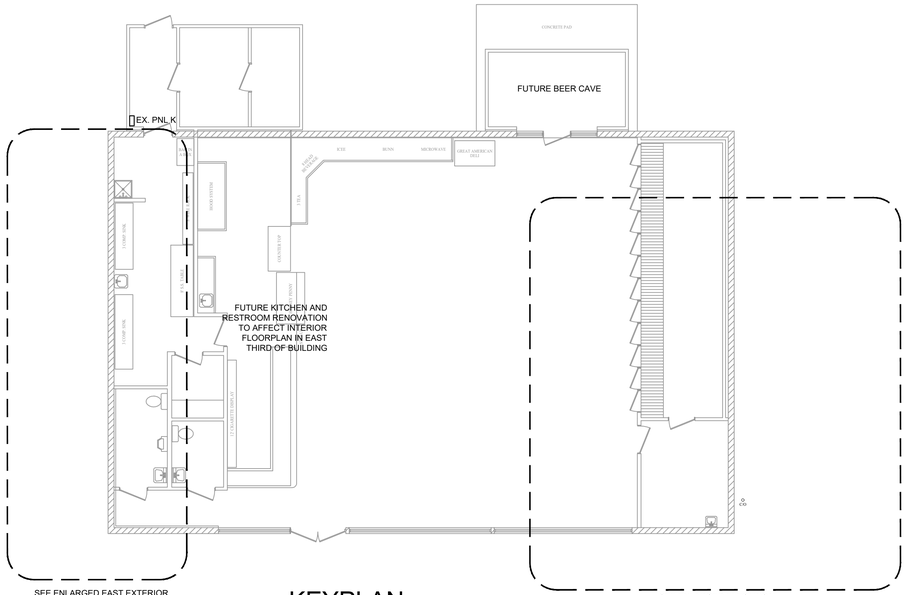

KEYPLAN

SCALE: 1/8" = 1' - 0"

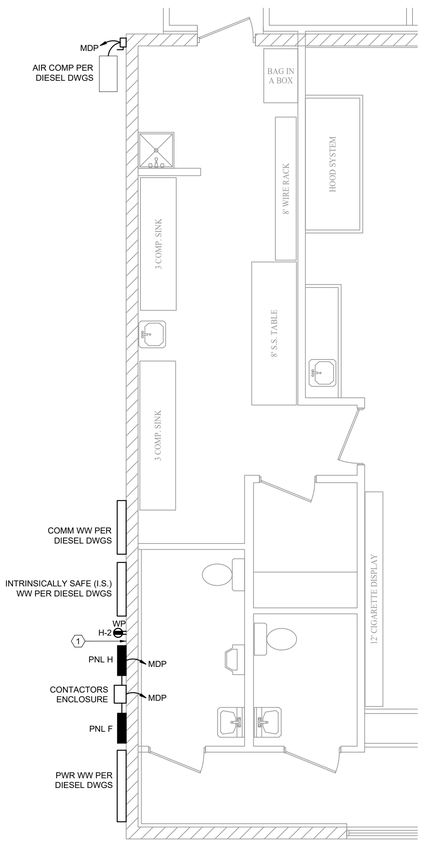

NEW WORK PLAN - EAST EXTERIOR

SCALE: 1/4" = 1' - 0"

SHEET NOTES

A. REFER TO DIESEL DRAWINGS BY OTHERS (INFINITY) FOR INFORMATION REGARDING DIESEL CANOPY, FUEL STORAGE, DISPENSERS, PUMPS, AIR COMPRESSOR, CONDUIT SEALS, EXTERIOR WIREWAYS, AND ALL CIRCUITS EXTENDING TO FUEL DISPENSING LOCATIONS.

B. UTILITY DISCONNECTION AND RE-CONNECTION SHALL BE COORDINATED WITH FPL.

SHEET KEYNOTES

1. PROVIDE WEATHERPROOF WALL PENETRATIONS.
2. PROVIDE YELLOW, CONCRETE ENCASED STEEL PIPE, BOLLARD. PROVIDE REMOVE-ABLE TYPE BOLLARD IN LOCATIONS AS REQUIRED FOR GENERATOR MAINTENANCE ACCESS AND RE-FUELING ACCESS.
3. SAVE 24" MIN. WIDTH CLEAR WALL SPACE FOR FUTURE PANEL.
4. PROVIDE WP PENETRATION AND LB AT WALL FOR FEEDER TO LOAD CENTER IN GENERATOR ENCLOSURE.

COBURN AND ASSOCIATES, INC
MECHANICAL• ELECTRICAL• CONSULTING ENGINEERS
P.O. BOX 577
HIGH SPRINGS, FLORIDA
PH 386-454-3748
CELL 352-538-0163
CERTIFICATE OF AUTHORIZATION 3687

CHAD J. FRALICK LICENSE No 73811 STATE OF FLORIDA PROFESSIONAL ENGINEER

THE SEAL HAS BEEN APPLIED TO THIS DOCUMENT BY CHAD J. FRALICK ON THE INDICATED DATE USING A DIGITAL SIGNATURE. PRINTED COPIES OF THIS DOCUMENT ARE NOT CONSIDERED SIGNED AND SEALED AND THE SIGNATURE MUST BE VERIFIED ON ANY ELECTRONIC DOCUMENTS. IF THERE IS ANY DOUBT AS TO THE AUTHENTICITY OF THE DOCUMENT, THE SIGNATURE MUST BE VERIFIED WITH THE ORIGINATOR.

Digitally signed by Chad J Fralick
Date: 2022.06.30 22:42:56 -04'00'

CA JOB NO.	DRAWN	APPROVED
2205	KLL	CJF

DATE OF ISSUE 7/1/2022

REVISIONS

PROJECT TITLE AND LOCATION

RENOVATIONS FOR
SUNSTOP STORE #303
1166 E DUVAL ST
LAKE CITY, FL 32055

SHEET TITLE

ELECTRICAL DEMO AND NEW PARTIAL PLANS

E200

PROVIDE SIGNS ON NOTED EQUIPMENT. SIGNS SHALL BE LAMINATED BLACK PHENOLIC RESIN WITH SOLID WHITE CORE WITH ENGRAVED LETTERING MINIMUM OF ¼ INCH HEIGHT.

SIGNS ON INTERIOR ITEMS MAY BE ATTACHED USING ADHESIVE. SIGNS ON EXTERIOR ITEMS SHALL BE ATTACHED USING WEATHERPROOF/UV RESISTANT ADHESIVE.

EXAMPLES ARE DEPICTED BELOW.

MAIN DISCONNECT FOR SUNSTOP (ALSO FED FROM STANDBY GENERATOR WEST OF BUILDING)	PROVIDE ON ATS, FRONT COVER
MAIN DISCONNECT FOR SUNSTOP GENERATOR	PROVIDE ON OUTSIDE OF GENERATOR ENCLOSURE, ON ENCLOSURE DOOR IN FRONT OF GENERATOR BREAKER
VOLTAGE 240/120 3PH PHASE A BLACK PHASE B ORANGE (HIGH LEG) PHASE C BLUE NEUTRAL WHITE GROUND GREEN OTHER UNIDENTIFIED SYSTEMS EXIST ON PREMISES	PROVIDE ON INSIDE FRONT COVER OF 240/120V 3PH PANEL(S) (NEW AND EXISTING), AND IN ATS
VOLTAGE 120/240 1PH PHASE A BLACK PHASE C BLUE NEUTRAL WHITE GROUND GREEN OTHER UNIDENTIFIED SYSTEMS EXIST ON PREMISES	PROVIDE ON INSIDE FRONT COVER OF 120/240V (SINGLE PHASE) PANEL(S), NEW AND EXISTING
PANEL A 240/120 VOLTS, 3-PHASE, 4-WIRE SERVED FROM PANEL MDP, CKTS 2,4,6 ELEC ROOM	PROVIDE ON FRONT COVER OF EACH PANEL (NEW AND EXISTING), WITH APPLICABLE INFORMATION ON LABEL INCLUDING PANEL NAME, VOLTAGE, PHASE, WIRE, AND FEEDER SOURCE.
STANDBY GENERATOR SHUT OFF	PROVIDE ADJACENT TO REMOTE SHUT OFF BUTTON.

EXAMPLE NAMEPLATE DETAILS

FEEDER SCHEDULE

NAME	PHASE (AWG)	N (AWG)	G (AWG)	EBJ (AWG)	CONDUIT (3PH 4W)	CONDUIT (1PH OR 3PH 3W)	CONDUIT (1PH 2W)	AMPA-CITY
20	12	12	12	-	3/4"	3/4"	3/4"	20
30	10	10	10	-	3/4"	3/4"	3/4"	30
50	8	8	10	8	3/4"	3/4"	3/4"	50
60	6	6	10	8	1"	3/4"	3/4"	65
60*	4	4	10	8	-	1-1/4"	-	85
70	4	4	8	8	1-1/4"	1"	1"	85
80	4	4	8	8	1-1/4"	1"	1"	85
90	3	3	8	8	1-1/4"	1-1/4"	1"	100
100	3	3	8	8	1-1/4"	1-1/4"	1"	100
115	2	2	6	8	1-1/4"	1-1/4"	1"	115
125	1	1	6	6	1-1/2"	1-1/2"	-	130
150	1/0	1/0	6	6	2"	1-1/2"	-	150
175	2/0	2/0	6	4	2"	2"	-	175
200	3/0	3/0	6	4	2"	2"	-	200
225	4/0	4/0	4	2	2-1/2"	2"	-	230
250	250	250	4	2	3"	2-1/2"	-	255
300	350	350	4	1/0	3"	3"	-	310
380	500	500	3	1/0	3-1/2"	3"	-	380
400	(2) 3/0	(2) 3/0	(2) 3	(2) 1/0	(2) 2"	(2) 2"	-	400
400*	600	600	3	1/0	4"	3-1/2"	-	420
500	(2) 250	(2) 250	(2) 2	(2) 1/0	(2) 3"	(2) 2-1/2"	-	510
600	(2) 350	(2) 350	(2) 1	(2) 2/0	(2) 3"	(2) 3"	-	620

SIZES NOTED ABOVE ARE MINIMUM VALUES (AWG OR KCMIL).

ASSUMPTIONS FOR ITEMS ABOVE:
- AMPACITY BASED ON CU THHN/THWN-2 CONDUCTORS
- CONDUIT SIZES BASED ON PVC SCHED 40, EMT, IMC, OR RMC
- AMPACITY BASED ON TERMINATIONS & EQUIP RATED 75 DEGREE C
- CONTRACTOR IS AWARE OF CIRCUIT/FEEDER VOLTAGE

EXAMPLES:
60/G
3PH 3W FEEDER WITH EQUIPMENT GROUNDING CONDUCTOR: 3-#6AWG PHASE CONDUCTORS, NO NEUTRAL, AND 1-#10AWG EQUIPMENT GROUNDING CONDUCTOR IN A 3/4"" CONDUIT

100/N/EBJ
3PH 4W FEEDER WITH EQUIPMENT BONDING JUMPER: 3-#3AWG PHASE CONDUCTORS, 1-#3AWG NEUTRAL CONDUCTOR, AND 1-#8AWG EQUIPMENT BONDING JUMPER IN A 1-1/4"" CONDUIT"

20/G (1PH)
1PH 2W FEEDER WITH EQUIPMENT GROUNDING CONDUCTOR: 2-#12AWG PHASE CONDUCTORS (OR ONE PHASE AND ONE NEUTRAL IF 120V OR 277V), AND 1-#12AWG EQUIPMENT GROUNDING CONDUCTOR IN 3/4" CONDUIT.

20/G (1PH 3W) OR 20/N/G (1PH)
1PH 3W FEEDER WITH EQUIPMENT GROUNDING CONDUCTOR: 2-#12AWG PHASE CONDUCTORS, 1-#12AWG NEUTRAL CONDUCTORS, AND 1-#12AWG EQUIPMENT GROUNDING CONDUCTOR IN 3/4" CONDUIT.

LOAD SUMMARY

EXISTING LOADS		
12-MNTH KW PEAK	58.0	
ASSUMED PF	0.8	
KVA	72.5	
VA * 125%		90,625
LOADS REMOVED (VA)		0
NONE		
LOADS ADDED (VA)		58,452
DEF STP (1.5HP)	2,400	
DIESEL PUMP (2HP)	2,880	
DISPENSERS	1,600	
AIR COMPR (5HP)	6,318	
DIESEL LTG	1,554	
DIESEL SIGNS	4,800	
MISC CTRLS	1,000	
GEN HEATER	2,000	
FTR HVAC (NET)	6,000	
FTR BEER CAVE	3,500	
65% FTR KITCHEN (NET)	23,400	
MISC FUTURE (FTR)	3,000	
NEW LOAD SUMMATION (VA)		149,077
AMPS AT 240V/3PH (BALANCED)		359
APPROX AMPS 120/240 LOADS		485
NEW SERVICE SIZE		600

MAXIMUM PAST DEMAND ON EXISTING SERVICE OVER MOST RECENT 12-MONTH PERIOD, AS OF 4/29/2022: 58KW, PER FPL UTILITY, OBSERVED DURING RECENT WINTER.

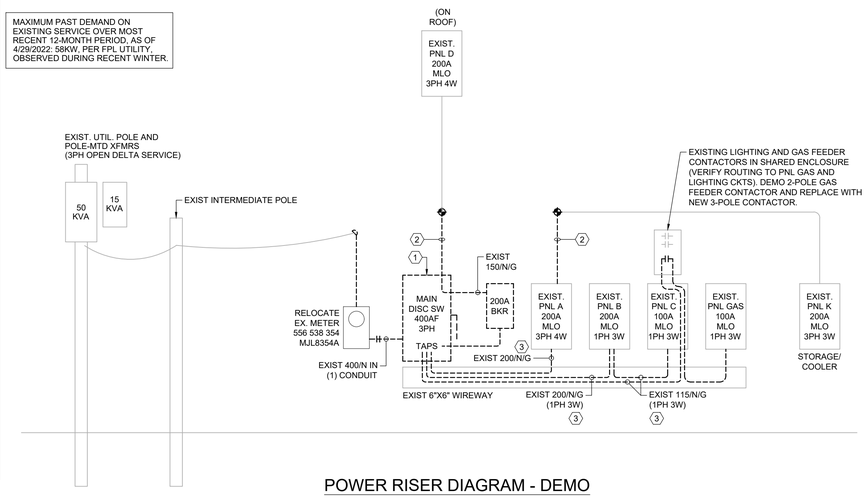

POWER RISER DIAGRAM - DEMO

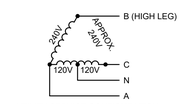

UTILITY SERVICE CONFIGURATION

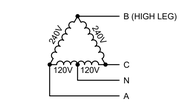

NEW GENERATOR CONFIGURATION

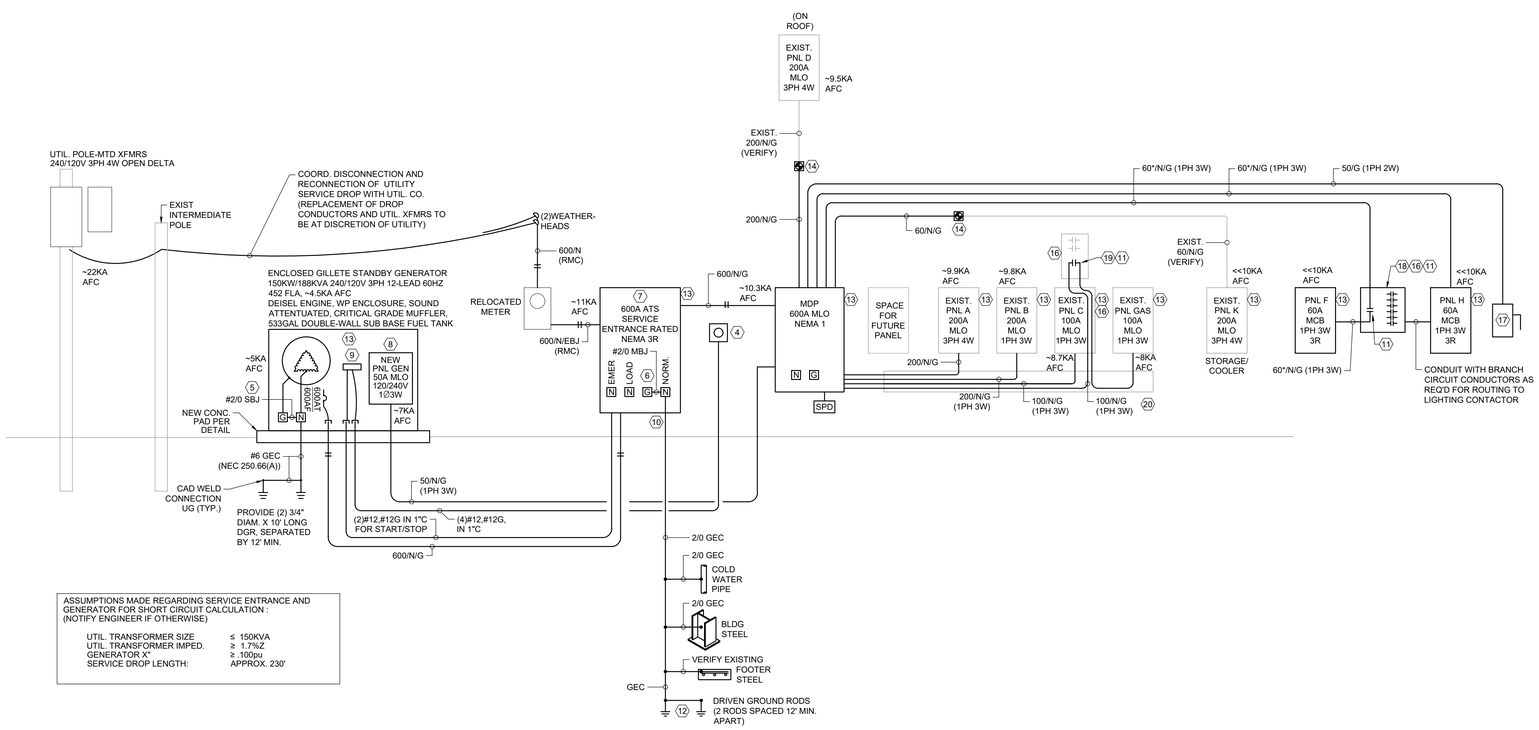

ASSUMPTIONS MADE REGARDING SERVICE ENTRANCE AND GENERATOR FOR SHORT CIRCUIT CALCULATION : (NOTIFY ENGINEER IF OTHERWISE)

UTIL. TRANSFORMER SIZE	≤ 150KVA
UTIL. TRANSFORMER IMPED.	≥ 1.7%Z
GENERATOR X"	≥ .100pu
SERVICE DROP LENGTH:	APPROX. 230'

POWER RISER DIAGRAM - NEW WORK

SHEET NOTES

A. NOT USED THIS SHEET.

SHEET KEYNOTES

1. DEMO MAIN DISCONNECT SWITCH, WEATHER HEAD, AND ASSOCIATED NIPPLES AND FEEDERS.
2. DEMO FEEDER UP TO INTERCEPT LOCATION.
3. DEMO FEEDER.
4. PROVIDE GENERATOR REMOTE STOP BUTTON ADJACENT TO ATS. CONNECT TO GENERATOR CONTROLLER (REMOTE SHUT OFF) .
5. GENERATOR SHALL BE CONSIDERED A SEPARATELY DERIVED SYSTEM. PROVIDE SYSTEM BONDING JUMPER BETWEEN GENERATOR NEUTRAL AND GENERATOR FRAME/GROUND.
6. PROVIDE MAIN BONDING JUMPER BETWEEN INCOMING SERVICE (NORMAL) NEUTRAL AND GROUND BAR WITHIN ENCLOSURE. DO NOT BOND GENERATOR (EMER) NEUTRAL OR LOAD NEUTRAL TO GROUND AT ATS.
7. 3-PHASE 4-WIRE ATS WITH SWITCHED NEUTRAL (4-POLE). SERVICE ENTRANCE BREAKER (ON INCOMING NORMAL SIDE) SHALL HAVE 600A TRIP, 65KAIC.
8. PROVIDE BRANCH CIRCUITS TO MISCELLANEOUS GENERATOR LOADS NOTED IN PANEL GEN SCHEDULE.
9. GENERATOR CONTROLLER IN ENCLOSURE.
10. BOND ATS NORM. NEUTRAL TO EXISTING AND NEW GROUNDING ELECTRODES (METALLIC COLD WATER PIPING).
11. CONTACTOR SHALL BE CONNECTED TO SIMULTANEOUSLY DISCONNECT ALL PHASE AND NEUTRAL CONDUCTORS OF 1PH 3W FEEDER UPON ACTIVATION OF ANY 'EMERGENCY FUEL SHUT-OFF' PUSHBUTTON. REFER TO DIESEL DRAWINGS FOR DIAGRAM.
12. CONFIRM EXISTING OR PROVIDE NEW.
13. PROVIDE LABEL, SEE DETAILS.
14. PROVIDE PULLBOX WITH SPLICES AT INTERCEPT LOCATION IN ELECTRICAL ROOM.
15. NOT USED.
16. PROVIDE LABEL TO INDICATE LOCATION OF DISCONNECTING MEANS FOR ALL NON-GROUNDED CONDUCTORS, IF DISCONNECTING MEANS IS NOT LOCATED WITHIN SAME ENCLOSURE.
17. 2P, 60A, 240VAC, HD, NF, NEMA 3R DISCONNECT AT AIR COMPRESSOR LOCATION. USE 3P DEVICE IF 2P IS NOT AVAILABLE.
18. NEMA 3R ENCLOSURE FOR CONTACTOR "F" (240V, 3P, 60A, ELECTRICALLY HELD, 120V COIL, INTERLOCKED WITH EMERGENCY SHUT OFF BUTTONS PER DIESEL DWGS) FOR PANEL F FEEDER, AND 6-POLE LIGHTING CONTACTOR (ELECTRICALLY HELD, 30A CONTACTS, 120V COIL, CONTROLLED VIA SWITCH AT CASHIER STATION) FOR PANEL H LIGHTING CIRCUITS.
19. PROVIDE NEW 3P 60A ELECTRICALLY HELD CONTACTOR WITH 120V COIL, FOR GAS PANEL FEEDER.
20. INTERCEPT EXISTING CONDUIT STUBUPS FROM EXISTING GAS CANOPY AREAS AND PROVIDE SEAL-OFF FITTINGS PER DIESEL DRAWINGS.

COBURN AND ASSOCIATES, INC
MECHANICAL • ELECTRICAL • CONSULTING ENGINEERS
P.O. BOX 577
HIGH SPRINGS, FLORIDA
PH 386-454-3748
CELL 352-538-0163
CERTIFICATE OF AUTHORIZATION 3687

CHAD J. FRALICK LICENSE No 73811 STATE OF FLORIDA PROFESSIONAL ENGINEER

THIS ITEM HAS BEEN DIGITALLY SIGNED AND SEALED BY CHAD J. FRALICK, P.E. ON THE INDICATED DATE. USING A DIGITAL SIGNATURE AND SEAL. PRINTED COPIES OF THIS DOCUMENT ARE NOT CONSIDERED SIGNED AND SEALED AND THE SIGNATURE MUST BE VERIFIED ON ANY ELECTRONIC DOCUMENTS. IF THERE IS ANY DOUBT AS TO THE AUTHENTICITY OF THE DOCUMENT, REFER TO THE ORIGINAL SIGNED AND SEALED DOCUMENT.

Digitally signed by Chad J Fralick
Date: 2022.06.30 22:43:15 -04'00'

CA JOB NO. 2205	DRAWN KLL	APPROVED CJF	
DATE OF ISSUE	7/1/2022		
REVISIONS			

PROJECT TITLE AND LOCATION

RENOVATIONS FOR SUNSTOP STORE #303

1166 E DUVAL ST
LAKE CITY, FL 32055

SHEET TITLE

ELECTRICAL RISER DIAGRAM

E300

EXISTING 3-PHASE PANEL SCHEDULE — A

MLO (A) 200 | POLES 30 | REMARKS: CAT. NO. CH2EE COVER
VOLTAGE 240/120 ▲ | MOUNTING SURFACE | CH TYPE LOAD CENTER, TAN BREAKERS
PHASE WIRE 3PH 4W | BRAND/TYPE CUTLER HAMMER
INTERRUPT 10KAIC | LOCATION ELEC RM
ENCL. TYPE 1 | FED FROM MAIN MDP
CAUTION: 3PH HIGH LEG PANEL

DESCRIPTION	BKR A/P	CKT NO.	C	A	B (HIGH LEG)	CKT NO.	BKR A/P	DESCRIPTION
EX. FRYER	40/3	1				2	50/3	EX. FRYER
---	---	3				4	---	---
---	---	5				6	---	---
EX. ICE	20/2	7				8	60/3	~~PANEL K~~ SPARE
---	---	9				10	---	---
SPACE (HIGH LEG)		11				12	---	---
EXISTING LOAD	20/1	13				14	30/2	EX. OVEN
EXISTING LOAD	20/1							
EX. COOLER FANS	20/1	15				16	---	---
EX. COOLER LTG	20/1							
SPARE	20/2	17				18		SPACE (HIGH LEG)
---	---	19				20	30/2 (OFF)	EX. DELI HOT CASE
EX. WARMER	20/2	21				22	---	---
---	---	23				24	20/2	EX. WARMER
EX. COMPUTER	20/1	25				26	---	---
EXISTING LOAD	20/1							
EX. HOOD LIGHTS	20/1	27				28	30/2	EX. GRILL
EXISTING LOAD	20/1							
SPACE (HIGH LEG)		29				30	---	---

ET LOAD ON PANEL TO DECREASE WITH THIS PROJEC

EXISTING 1-PHASE PANEL SCHEDULE — B

MLO (A) 200 | POLES 42 | REMARKS: CH TYPE LOAD CENTER, TAN BREAKERS
VOLTAGE 120/240 | MOUNTING SURFACE
PHASE WIRE 1PH 3W | BRAND/TYPE CUTLER HAMMER
INTERRUPT 10KAIC | LOCATION ELEC RM
ENCL. TYPE 1 | FED FROM MAIN MDP

DESCRIPTION	LOAD TYPE	BKR A/P	CKT NO.	A	C	CKT NO.	BKR A/P	LOAD TYPE	DESCRIPTION
EX. SIGN/AIR PUMP		30/1	1			2	20/2		EXISTING LOAD
EXISTING LOAD		20/1	3			4	---		---
EXISTING LOAD		20/1							
EX. FLOOR BOX		20/1	5			6	20/1		EXISTING LOAD
EXISTING LOAD		20/1					20/1		EXISTING LOAD
EXISTING LOAD		20/1	7			8	20/1		EX. LIGHTS
							20/1		EXISTING LOAD
EXISTING LOAD		20/1	9			10	40/2		EX. COTTER
EXISTING LOAD		20/1							
EXISTING LOAD		20/1	11			12	---		---
EXISTING LOAD		20/1							
EXISTING LOAD		30/1	13			14	20/1		EXISTING LOAD
							20/1		EXISTING LOAD
EX. SMOOTHIE		20/1	15			16	20/1		EXISTING LOAD
EXISTING LOAD		20/1					20/1		EXISTING LOAD
EX. ICE MOUNTAIN		20/1	17			18	20/1		EXISTING LOAD
EXISTING LOAD		20/1					20/1		EXISTING LOAD
EXISTING LOAD		20/1	19			20	20/1		EXISTING LOAD
EXISTING LOAD		20/1					20/1		EXISTING LOAD
EX. HOOD		40/2	21			22	20/1		EXISTING LOAD
							20/1		EXISTING LOAD
---		---	23			24	20/1		EX. CONVECTION OVEN
							20/1		EX. INTAKE FAN
EX. MONITOR		20/1	25			26	20/1		EX. DELI RECEPT
							20/1		EXISTING LOAD
EXISTING LOAD		20/1	27			28	30/2		EX. PREP CASE
EXISTING LOAD		20/1	29			30	---		---
EXISTING LOAD		20/1	31			32	20/1		EXISTING LOAD
							20/1		EXISTING LOAD
EXISTING LOAD		20/1	33			34	20/1		EXISTING LOAD
EXISTING LOAD		20/1					20/1		EXISTING LOAD
EXISTING LOAD		20/1	35		0	36	~~100/2~~ 20/1		~~PNL C~~ SPARE (4)
							---	R	---
EX. WALK LIGHT		20/1	37			38	20/1		EXTERIOR REC (4)
EXISTING LOAD		20/1	39			40	20/1		EXISTING LOAD
EXISTING LOAD		20/1					20/1		EXISTING LOAD
EX. SPRINKLER SYSTEM		20/1	41			42			EXISTING LOAD
EX. ICE CREAM FREEZER		20/1							

ET LOAD ON PANEL TO DECREASE WITH THIS PROJEC

LOAD TYPE
L = LIGHTING
R = RECEPTACLE
M = MOTOR
G = GENERAL
S = SPECIAL
V = VARIED
* = NON CONCURRENT

EXISTING 1-PHASE PANEL SCHEDULE — GAS

MLO (A) 100 | POLES 16 | REMARKS: CH TYPE LOAD CENTER, TAN BREAKERS
VOLTAGE 120/240 | MOUNTING SURFACE | FED WITH 60A FEEDER
PHASE WIRE 1PH 3W | BRAND/TYPE CUTLER HAMMER
INTERRUPT 10KAIC | LOCATION ELEC RM
ENCL. TYPE 1 | FED FROM MAIN MDP

DESCRIPTION	BKR A/P	CKT NO.	A	C	CKT NO.	BKR A/P	DESCRIPTION
EX. REG GAS PUMP	30/2	1			2	~~20/1~~ 20/1	~~SPARE (BAD BKR)~~ SPARE (2)
---	---	3			4	SWN	---
EX. PREM. GAS PUMP	20/2	5			6	~~20/1~~ 20/1	EX. MPDS (4)
---	---	7			8	SWN	~~EX. GAS CONSOLE~~ ---(CKT SWN)'---
						~~20/1~~	
EX. HOOK ISOLATION (4)	~~20/1~~ 20/1	9			10	~~20/1~~ 20/1	~~G SITE~~ EX. GAS CONSOLE (4)
SPACE ---(CKT SWN)'---	SWN	11			12	SWN	SPACE ---(CKT SWN)'---
SPACE		13			14	20/1	SPACE EX. G SITE (4)
SPACE		15			16	SWN	SPACE ---(CKT SWN)'---

NET LOAD ON PANEL TO STAY THE SAME.

NEW 3-PHASE PANEL SCHEDULE — MDP

MLO (A) 600 | MTG SPACE 63" MIN. | REMARKS: CAUTION: 3PH HIGH LEG PANEL
VOLTAGE 240/120 ▲ | MOUNTING SURFACE | COORD. PHASE CONNECTION OF
PHASE WIRE 3PH 4W | B.O.D. SQ D I-LINE HCF | 2-POLE BREAKERS TO AVOID HIGH LEG
INTERRUPT 42KAIC | LOCATION EXTERIOR WALL | 250A MAX BRANCH BREAKERS
ENCL. TYPE 1 | FED FROM ATS

DESCRIPTION	LOAD TYPE	BKR A/P	CKT NO.	A	B (HIGH LEG)	C	CKT NO.	BKR A/P	LOAD TYPE	DESCRIPTION
EX. PNL D (ROOF)		200/3	1				2	60/3		SPD (200KA)
---		---	3				4	---		---
---		---	5				6	---		---
EX. PNL A		200/3	7				8			
---		---	9				10			
---		---	11			4,340	12	60/2	V	PNL F (DSL PANEL)
EX. PNL K		60/3	13	2,640			14	---	V	---
---		---	15				16			
---		---	17				18	100/2	L	EX. PNL C
			19				20	---	L	---
			21				22			
EX. PNL B		200/2	23			1,730	24	50/2	V	PNL GEN
---		---	25	1,000			26	---	V	---
SPACE FOR FUTURE 200A BKR			27				28			
---			29			3,159	30	40/2	M	AIR COMPRESSOR (PER DIESEL DWGS)
---			31	3,159			32	---	M	---
			33				34			
EX. PNL GAS		60/2	35			2,790	36	60/2	V	PNL H
---		---	37	2,444			38	---	V	---
			39				40			
			41				42			

SEE LOAD SUMMARY ON RISER SHEET.

LOAD TYPE
L = LIGHTING
R = RECEPTACLE
M = MOTOR
G = GENERAL
S = SPECIAL
V = VARIED
* = NON CONCURRENT

NEW 1-PHASE PANEL SCHEDULE — F (6)

MCB (A) 60 | POLES 30 | REMARKS: DIESEL LOADS PANEL
VOLTAGE 120/240 | MOUNTING SURFACE | BREAKER TYPES:
PHASE WIRE 1PH 3W | B.O.D. SQ D NQ | L = LOCKABLE IN OFF POSITION
INTERRUPT 10KAIC | LOCATION EAST EXT WALL | SWN = SWITCHED NEUTRAL
ENCL TYPE 3R | FED FROM MDP VIA CONT-F

DESCRIPTION	LOAD TYPE	BKR A/P	CKT NO.	A	C	CKT NO.	BKR A/P	LOAD TYPE	DESCRIPTION
MISC-DIESEL/DEF ENSP #1 Or 2	M	20/1 &SWN	1	800 1,440		2	25/2 L	M	DIESEL STP (2HP)
--- (CKT SWN) ---		---	3		0 1,440	4	---	M	---
MISC-DIESEL/DEF ENSP #1 Or 2	M	20/1 &SWN	5	800 1,200		6	20/2 L	M	DEF STP (1.5HP)
--- (CKT SWN) ---		---	7		0 1,200	8	---	M	---
SPARE		20/1 &SWN	9	0 100		10	20/1 L	G	OVERFILL ALARM
--- (CKT SWN) ---		---	11		0 0	12	20/1 L		SPARE
SPACE			13	0 0		14			SPACE
SPACE			15		0 0	16			SPACE
SPACE			17	0 0		18			SPACE
SPACE			19		0 0	20			SPACE
SPACE			21	0 0		22			SPACE
SPACE			23		0 0	24			SPACE
SPACE			25	0 0		26			SPACE
SPACE			27		0 0	28			SPACE
SPACE			29	0 0		30			SPACE
VA TOTAL EACH PHASE				4,340	2,640				

	CONNECTED	NEC FEEDER
VA LIGHTING	0	0
VA RECEPTACLE	0	0
VA MOTOR	6,880	7,600
VA GENERAL	100	100
VA W/ MULTIPLIER	0	0
	VA	AMPS
TOTAL CONNECTED	6,980	29.1
TOTAL NEC FEEDER	7,700	32.1

NEC Feeder calc:
Lighting per NEC 215.2 & 220.12,
Receptacle per NEC 220.14 & 220.44,
Motor per NEC 430.24.

LOAD TYPE
L = LIGHTING
R = RECEPTACLE
M = MOTOR
G = GENERAL
S = SPECIAL
V = VARIED
* = NON CONCURRENT

NEW 1-PHASE PANEL SCHEDULE — GEN

MLO (A) 50 | POLES 12 | REMARKS: LOAD CENTER AT GENERATOR
VOLTAGE 120/240 | MOUNTING SURFACE
PHASE WIRE 1PH 3W | B.O.D. SQ D QO
INTERRUPT 10KAIC | LOCATION GEN ENCL
ENCL TYPE 1 | FED FROM MDP

DESCRIPTION	LOAD TYPE	BKR A/P	CKT NO.	A	B	CKT NO.	BKR A/P	LOAD TYPE	DESCRIPTION
REC & LT	V	20/1	1	230 500		2	20/1	G	BATTERY CHARGER
COOLANT HEATER (1)	G	20/2	3		1,000 0	4	20/1		SPARE
---	G	---	5	1,000 0		6			SPACE
SPACE			7		0 0	8			SPACE
SPACE			9	0 0		10			SPACE
SPACE			11		0 0	12			SPACE
VA TOTAL EACH PHASE				1,730	1,000				

	CONNECTED	NEC FEEDER
VA LIGHTING	50	63
VA RECEPTACLE	180	180
VA MOTOR	0	0
VA GENERAL	2,500	2,500
VA W/ MULTIPLIER	0	0
	VA	AMPS
TOTAL CONNECTED	2,730	11.4
TOTAL NEC FEEDER	2,743	11.4

NEC Feeder calc:
Lighting per NEC 215.2 & 220.12,
Receptacle per NEC 220.14 & 220.44,
Motor per NEC 430.24.

LOAD TYPE
L = LIGHTING
R = RECEPTACLE
M = MOTOR
G = GENERAL
S = SPECIAL
V = VARIED
* = NON CONCURRENT

NEW 1-PHASE PANEL SCHEDULE — H (6)

MCB (A) 60 | POLES 30 | REMARKS: DIESEL LOADS PANEL
VOLTAGE 120/240 | MOUNTING SURFACE | BREAKER TYPES:
PHASE WIRE 1PH 3W | B.O.D. SQ D NQ | L = LOCKABLE IN OFF POSITION
INTERRUPT 10KAIC | LOCATION EAST EXT WALL | SWN = SWITCHED NEUTRAL
ENCL TYPE 3R | FED FROM MDP VIA CONT-F

DESCRIPTION	LOAD TYPE	BKR A/P	CKT NO.	A	C	CKT NO.	BKR A/P	LOAD TYPE	DESCRIPTION
SITE LTG	L	20/1	1	810 180		2	20/1	R	REC NEAR PANEL
TRUCK CANOPY LTG	L	20/1	3		744 0	4	20/1		SPARE
EFSO	G	20/1	5	100 0		6	20/1		SPARE
TRUCK CANOPY SIGN	L	20/1	7		1,200 0	8	20/1		SPARE
TRUCK CANOPY SIGN	L	20/1	9	1,200 0		10	20/1		SPARE
TRUCK CANOPY DEF PRICER	L	20/1 HT	11		500 0	12	20/1		SPARE
TRUCK CANOPY DSL PRICER	L	20/1 HT	13	500 0		14			SPACE
SPACE			15		0 0	16			SPACE
SPACE			17	0 0		18			SPACE
SPACE			19		0 0	20			SPACE
SPACE			21	0 0		22			SPACE
SPACE			23		0 0	24			SPACE
SPACE			25	0 0		26			SPACE
SPACE			27		0 0	28			SPACE
SPACE			29	0 0		30			SPACE
VA TOTAL EACH PHASE				2,790	2,444				

	CONNECTED	NEC FEEDER
VA LIGHTING	4,954	6,193
VA RECEPTACLE	180	180
VA MOTOR	0	0
VA GENERAL	100	100
VA W/ MULTIPLIER	0	0
	VA	AMPS
TOTAL CONNECTED	5,234	22
TOTAL NEC FEEDER	6,473	27

NEC Feeder calc:
Lighting per NEC 215.2 & 220.12,
Receptacle per NEC 220.14 & 220.44,
Motor per NEC 430.24.

LOAD TYPE
L = LIGHTING
R = RECEPTACLE
M = MOTOR
G = GENERAL
S = SPECIAL
V = VARIED
* = NON CONCURRENT

SHEET NOTES

A. NOT USED THIS SHEET.

SHEET KEYNOTES

1. COORDINATE BREAKER SIZE AND POLES WITH HEATER NAMEPLATE REQUIREMENTS.
2. CONTRACTOR SHALL VERIFY EXISTING FEEDER AND EXISTING ROOF PANEL BUS SIZE; ADJUST BREAKER SIZE TO MATCH.
3. NOT USED.
4. PROVIDE NEW BREAKER IN EXISTING PANEL.
5. PROVIDE NEW FILLER PLATE FOR TO COVER SPACE OPENING.
6. REFER TO DIESEL DRAWINGS FOR ALL BRANCH CIRCUITS NOTED IN THIS PANEL.

COBURN AND ASSOCIATES, INC
MECHANICAL • ELECTRICAL • CONSULTING ENGINEERS
P.O. BOX 577
HIGH SPRINGS, FLORIDA
PH 386-454-3748
CELL 352-538-0163
CERTIFICATE OF AUTHORIZATION 3687

CHAD J. FRALICK LICENSE No 73811 STATE OF FLORIDA PROFESSIONAL ENGINEER

THE ELECTRONICALLY SEALED AND SIGNED BY CHAD J. FRALICK ON THE INDICATED DATE IS ONLY VALID FOR THE PDF VERSION OF THIS DOCUMENT. ANY NOT CONSIDERED SIGNED AND SEALED. THE SEAL APPEARING ON ANY OTHER ELECTRONIC DOCUMENTS, IF THERE IS ANY DOUBT AS TO THE AUTHENTICITY OF THE DOCUMENT, THE WORKING COPY MAY BE VERIFIED BY CONTACTING THE ORIGINATOR.

Digitally signed by Chad J Fralick
Date: 2022.06.30 22:43:33 -04'00'

APPROVED	CJF
DRAWN	KLL
DATE OF ISSUE	7/1/2022
REVISIONS	
CA JOB NO.	2205

PROJECT TITLE AND LOCATION

RENOVATIONS FOR
SUNSTOP STORE #303
1166 E DUVAL ST
LAKE CITY, FL 32055

SHEET TITLE

PANEL SCHEDULES

A	B	GAS	MDP
F	GEN	H	

E400

ELECTRICAL SPECIFICATIONS GENERAL

A. All work shall be performed or installed in strict accordance with the following (each contractor and subcontractor shall be responsible for compliance):
   1. NFPA 70 National Electrical Code (2017 Edition)
   2. Florida Building Code (2020, 7th Edition)
   3. NFPA 72 National Fire Alarm and Signaling Code (2016 Edition)
   4. NFPA 101 Life Safety Code (2018)
   5. NFPA 110 Emergency and Standby Power Systems (2016)
   6. NFPA 780 Lightning Protection (2017)
   7. OSHA Regulations
   8. All other applicable rules, regulations, and codes of local, state, and federal governments having lawful jurisdiction.

B. Furnish all labor, materials, fixtures, equipment, tools and service necessary for installation, testing, and adjusting of all electrical system. Electrical systems shall be furnished and installed in compliance with the Drawings, Specifications, and any Addenda thereto.

C. All equipment and materials provided shall meet or exceed specification requirements, be new and unused (unless furnished by the owner), listed under an UL category, and shall be a product of a manufacturer regularly engaged in producing such equipment and materials for at least five years.

D. Drawings and Specification shall be understood to cover, according to their intent and meaning, complete electrical systems. Work shown on the drawings yet not specified, and work specified yet not shown on the drawings shall be performed as though mentioned in both.

E. Minor items and accessories reasonably inferred as necessary for the complete and proper operation of any system shall be provided by contractor or subcontractor for such system whether or not they are specifically called for.

F. The Electrical Contractor shall include in his bid the cost of furnishing, installing, maintaining, and removing all material and equipment required to provide temporary lights and power to perform the work of all trades during construction and until work is completed. Adequate lighting and receptacle outlets for operation of hand tools shall be provided throughout the project - including shanties, trailers, field offices, and temporary toilet enclosures - and shall be extended as construction progresses.

G. Prior to bidding, the Electrical Contractor shall coordinate with the electric power company to ascertain, in detail, the division of work, and the extent of performance by the Power Company.
   9.

H. Each panelboard, switchboard, disconnect, pullbox larger than 4"x4", transformer, contactor, separately enclosed breaker, separately enclosed starter, transfer switch, and time clock shall be labeled with the same designation shown on the drawings.

I. Labels shall be laminated plastic engraved, with letter size no less than 3/8 inch in height. Exterior labels shall be UV resistant and weatherproof.

J. Furnish all equipment and personnel and conduct all tests required to secure approval of the installation.

K. Safety Tests
   1. All systems shall test free from short circuits and grounds, shall be free from mechanical and electrical defects, and shall show an insulation resistance between phase conductors and ground of not less than that specified by the cable manufacturer.
   2. All systems shall show proper neutral connections.
   3. Key-operated interlock mechanisms shall be demonstrated to perform as intended.

M. Upon completion of each part of the electrical system, the contractor shall demonstrate to the Engineer that each item on that system is installed with proper covers, safeties, controls, etc., and that all are in proper working order.

N. A set of "red-lined" electrical drawings shall be carefully maintained at the job site. Actual conditions are to be put legibly on the drawings in red on a daily basis so the drawings will continuously show locations and routings of cable trays, conduits, pull boxes, circuit numbers, and other information required by the Owner and Engineer.

O. Shop drawings and product data shall be submitted on all equipment, fixtures, etc. Shop drawings shall be labeled in the same designation as individual piece of equipment for which they are being submitted; the proper designation shall be the designation used on the various equipment schedules and or in other Sections of this Specification, i.e. Fixture A, Panel B, MDP, etc. Each submittal package shall be combined into a single PDF file and emailed (or otherwise electronically transmitted) to Engineer.

P. Job condition shall be determined prior to bidding in the following manner:
   1. Site visit to determine:
      a. Existing conditions
      b. How and where materials will be delivered and stored
      c. Special problems encountered during construction
   2. Examine all Contract Drawings and Specifications to determine:
      a. Type of construction to be used
      b. Nature and extent of work of other trades

S. General
   1. Contract Drawings show the intended arrangements and sizes of principal apparatus and devices to be provided under this Contract. Drawings shall be followed as closely as actual building construction will permit.
   2. Dimensions of work as indicated on Plans are not guaranteed to be as-built dimensions.
   3. Measurements shall not be scaled from Drawings and used as definite dimensions for layout or fitting of work in place.
   4. Layout of equipment, as shown on the plan, shall be checked and exact location determined by dimension of equipment approved by the Architect.
   5. Consult the Drawings for all dimensions, locations of partitions, sizes of structural members, foundations etc.
   6. Do not make final layouts until shop or equipment drawings are approved and job conditions verified.

T. Coordination:
   1. Work shall be coordinated between all Contractors, Subcontractors, Installers, Suppliers, Trades, etc. to:
      a. Insure a neatly fitted installation
      b. Eliminate interferences
      c. Maintain maximum headroom and clearances
   2. Any interference which develops or is foreseen and cannot be resolved by the affected trades, shall be handled as follows:
      a. Cease installation of the portion of the work which is in conflict.
      b. Continue work on items which are not in conflict.
      c. Notify the Architect immediately.
      d. Architect's decision shall be final as to any relocation, rerouting, removal, or change.
      e. No additional compensation will be allowed for removal, relocation, repairs or changes required by interferences.

U. Clear away all debris, surplus materials, etc. resulting from work. Maintain job and equipment in clean, first-class condition.

V. Clean all panel boards, switches, boxes, etc., and leave them in a ready-to-use condition.

W. All panelboard and junction box covers shall be secured with proper screws or bolts.

X. Where factory finish is provided on equipment, each marred or damaged surface shall be touched-up or refinished in accordance with manufacturer recommendations.

Y. In addition to provisions and stipulation set forth in other Sections of these Specifications, provide various types of protection as follows:
   1. Protect finished floors from chips and cutting oil by use of metal chip receiving pan and oil-proof floor cover.
   2. Protect surfaces and items from over-spray and drops due to painting and finishing work associated with electrical work.
   3. Protect grills, diffusers, parts, openings, and vents as necessary to prevent intrusion of smoke, dust, and debris into devices, equipment, and systems. Ensure protection of heat-generating equipment does not cause equipment to overheat.
   4. Stored equipment shall be covered to exclude dust and moisture, shall be protected from weather, shall be protected from entry of foreign materials, and shall be protected from theft and vandalism.

Z. Concrete housekeeping pad or pads shall be provided for floor-mounted equipment, U.N.O. Concrete shall be cast no less than 4" thick, shall be rated no less than 3000 PSI, and shall be cast with 1/2" chamfered top perimeter edges. Housekeeping pad vertical surfaces, chamfers, and a stripe 6" wide around the top perimeter of the pad shall be painted safety yellow.

AA. Contractor shall be responsible for photographing the following items, or ensuring that the items are safely observable - with covers removed or easily removable - during substantial inspection: incoming feeder terminations at main disconnecting means, main bonding jumper, grounding electrode connection(s) at each system (main and separately derived), transfer switch terminations, transformer terminations, system bonding jumper(s) as applicable, isolated neutral at downstream equipment, panels, switchboards, switchgear, motor control centers, starters, disconnects, and pull-boxes.

AB. Each penetration of a rated assembly by a pipe, tube, wire, conduit, or cable tray shall be protected by a UL listed fire-stop system (tested per ANSI/UL 1479 or ASTM E814) with a rating no less than the rating of the assembly, and in no case less than 1-hour.

AC. Self-illuminated exit signs, emergency lighting fixtures, and emergency lighting drivers shall be connected to unswitched conductors. Such conductors shall be connected directly to the branch circuit breaker (bypassing all control devices, switches, contactors, timeclocks, photocells, etc.). Contractor shall provide additional conductor with switched lighting circuit conductor as necessary to meet this requirement.

DEMOLITION

A. Demolition of each noted item shall include complete removal of associated dedicated circuiting back to source.

B. Demolition of circuiting shall include complete removal of cables, conductors, raceway, conduit, tubing, conduit bodies, fittings, boxes, labeling, splices, taps, mounting hardware, hangers, anchors, and supporting means. Empty raceway concealed below concrete floors, within concrete, or within existing-to-remain walls may be abandoned in place. Exposed conduit at floor stub-ups, at wall stub-outs, and at cast-ceiling stub-outs shall be cut off and shall be ground below surface; the affected surface shall be repaired to be flush with adjacent surfaces and shall be refinished to match adjacent surfaces.

C. For each branch circuit removed:
   1. The associated circuit schedule and source labeling shall be updated to identify existing breaker as "SPARE".
   2. The associated existing branch breaker shall be opened (switched to the "OFF" position).

D. An appropriately sized cover or plug shall be provided to close each opening - in raceways, boxes, and enclosures - caused by work under this project.

E. Surface openings resulting from demolition shall be sealed, patched, repaired, and finished to match existing adjacent surfaces.

F. Each existing-to-remain item damaged by demolition work shall be replaced or repaired to previous condition.

G. Dedicated support accessories - such as concrete pads, tank saddles, support piers, equipment curbs, pole bases, posts, stanchions, trunions, anchors, guy wires, suspension means, and other support accessories - shall be removed if the item supported is removed.

H. Each surface exposed by the removal of a surface-mounted item shall be cleaned and repainted to match adjacent surfaces.

I. Landscaping, sod, sidewalk, asphalt and grading damaged by demolition work shall be repaired to match surrounding area.

J. Disposal of demolished items shall be in accordance with all applicable regulations.

K. Fluids shall be removed from demolished items prior to transport.

EXCAVATION AND BACKFILL

A. Contractor shall coordinate with the General Contractor to determine the extent of his responsibility to perform the excavation and backfilling related to the electrical scope of work.

B. Contractor shall be responsible for contacting the appropriate "CALL BEFORE YOU DIG" authority prior to commencing excavation activities.

ROUGH-IN

A. Contractor shall rough-in for all equipment, fixtures, etc., in building whether or not such equipment is furnished by this Contractor or under other divisions of Specifications or by Owner.

B. Determine in advance the location and size of all openings and chases necessary for proper installation of all work and have openings and chases provided during construction.

C. Install all inserts for hangers and supports of electrical work as general construction progresses.

D. Rough-in openings in masonry, brick, or stud walls shall be cut, not broken or chiseled.

E. Openings shall not be larger than the coverplate or box which will fit over it.

F. A sleeves shall be required at each location where exposed conduit is to pass through a concrete wall, concrete floor slab, or masonry wall. Sleeves installed below grade or where subject to high water conditions shall be installed water tight.

BASIC MATERIALS & METHODS CONDUIT

A. Rigid metal conduit (RMC) shall be steel, hot dip galvanized, minimum trade size shall be 3/4".

B. Electrical Metallic Tubing (EMT) shall be steel, electro or hot dip galvanized. EMT fittings shall be compression type, concrete-tight.

C. Flexible Metallic Tubing shall be galvanized steel (aluminum not acceptable). Sealtite type UA or EF shall be used for all motor connections.

D. Rigid Non-metallic conduit shall be listed for use as electrical raceways. PVC shall be high density Type I Schedule 40, unless noted otherwise.

E. Connectors shall have insulated throats.

F. All fittings and connectors shall be steel or malleable iron. Pot-metal not acceptable.

G. Power conductors shall be installed in conduit.

H. Fittings or symmetrical bends shall be required wherever right angle turns are made in exposed work.

I. Bends and offsets shall be avoided wherever possible, but where necessary, they shall be made with an approved conduit bending tool or machine.

J. All conduit joints shall be cut square, reamed smooth and drawn up tight.

K. Conduit shall be installed in horizontal and vertical runs in such a manner as to ensure against trouble from the collection of trapped condensation and shall be arranged so as to be devoid of traps.

L. Special care shall be used to ensure that aboveground conduit runs are parallel or perpendicular to walls, structural members, building lines, or intersections of vertical planes and ceiling.

M. During construction, all conduit work shall be protected to prevent introduction of water, dust, or debris into conduits, fittings or boxes.

N. Previously plugged or capped conduit shall be entirely free of damage, accumulation, debris, and residue prior to use, or the conduit shall be replaced.

O. All conduits in floors or below grade shall be swabbed free of debris and moisture before wires are pulled.

P. Conduit noted as "SPARE", "EMPTY", or "FOR FUTURE USE" shall be provided with pullstring and readily removable caps or duct seal (no glue). Such conduit shall be labeled on both ends of run.

Q. Conduit shall be properly supported per NEC and as specified herein.

R. Expansion fittings or other approved devices shall be used to provide for expansion and contraction where conduits cross building expansion joints and as recommended by manufacturer for long runs.

S. Each conduit passing from conditioned to non-conditioned space (such as from interior to exterior) or between two conditioned spaces with temperature differences greater than 15°F (such as from conditioned building to refrigeration unit) shall be sealed internally with duct seal or similar at the the penetration.

T. A flexible grounding strap shall bridge expansion joints and shall be bonded to conduit.

U. Conduit, boxes, devices, lights, and other electrical items shall be located to eliminate interference with moveable or serviceable items, such as eyebolts, cranes, equipment access doors, lifts, rollup doors, valves, or other items that may require clearance.

V. Conduit above slab shall be run concealed in the walls or ceilings unless specifically noted to be exposed. Noted exceptions include electrical and mechanical rooms.

W. Conduit under ground shall be buried no less than 24 inches below finished grade for non-service entrance, and no less than 30 inches below finished grade for service entrance (unless utility requires greater depth).

X. Conduit installed for incoming utilities (such as service entrance power, telephone, data, cable TV, etc.) shall comply with the appropriate utility requirements. Contractor shall coordinate with utility inspection of installation prior to backfill.

Y. Conduit bushings shall be provided at the termination point of all conduit runs, if not otherwise terminated at enclosures with connectors.

Z. Underground raceway shall be thoroughly photographed by the contractor prior to backfill or concrete pour. The photos shall be taken in sufficient quantity and in such a manner to enable the Engineer and Owner to accurately discern the raceway routing, burial depth, type of bends (coated RMC, for example) and if applicable, duct bank layout and reinforcing steel.

AA. Routing with conduits less than 2" trade size is intentionally not typically depicted on drawings, but shall be provided. Routing for conduit 2" trade size and larger is typically depicted to show intended routing. Exact routing of conduit shall be determined in the field for ease of installation provided that the following criteria is met:
   1. All conduit, home runs, and circuits are made to the panel specified on the drawings, unless specifically noted to be routed via a control device (such as a switch, contactor, or time clock).
   2. Conduit runs shall comply with NEC.
   3. Conduits shall not conflict with other trades.
   4. Conduits shall not encroach on spaces dedicated for clearance or accessibility.
   5. Routing shall not render covers or doors inaccessible or non-removeable.

AB. Final connection to motors, etc., shall be made via one of the following methods (method must also be appropriate for the environment installed):
   1. Flexible metal conduit with stranded conductors
   2. Liquid-light flexible metal conduit with stranded conductors
   3. Armored flexible conduit which shall be waterproof for any locations outside, in kitchens, or any inside area subject to water, heavy moisture, condensation, etc.

AC. SPECIFIC CONDUIT TO BE USED
   1. All conduit and fittings shall be in new, unused condition, shall be free from rust, dirt, moisture, kinks, flats, cuts, or other distortions of shape.
   2. Concealed and exposed conduit in building, above slab shall be EMT with compression fittings. IMC and RMC also permitted.
   3. Straight conduit embedded in concrete shall be PVC with waterproof joints or PVC-coated RMC.
   4. Exposed conduit outside building, above grade shall be RMC with threaded waterproof fittings.
   5. Underground straight conduit shall be PVC with waterproof joints.
   6. Underground bends, penetrations through slabs-on-grade, and stub-ups from final bends up to equipment shall be PVC-coated RMC with radius of bend no less than 8x trade size of conduit.

SUPPORTS AND HANGERS

A. Conduit shall be supported on structural building members such as columns, beams, purlins, block, studs, or joists.

B. Conduit shall be supported on galvanized or aluminum brackets, clamps, or straps.

C. Conduit hangers shall be attached to building steel by beam clamps.

D. Hangers and supports shall be attached to wooden stud walls with wood screws.

E. Hangers and supports shall be attached to masonry with expansion type anchors (shield).

F. Supports shall be channel type supports such as manufactured by Uni-Strut, Globe, Kindorf, or equal.

G. Supporting means shall not be attached to roof decking.

BOXES

A. Pullboxes in air-conditioned spaces shall be code gauge and size, galvanized steel with screw-type or hinged-type cover.

B. Exterior pullboxes above grade shall be code gauge and size, galvanized steel with enamel finish and with screw-type or hinged-type cover. Boxes shall be rainproof and rated for the environment, but not less than NEMA 3R.

C. Exterior pullboxes underground and associated covers shall be no less than code size, shall be ANSI-Tier-rated as noted on drawings, and shall be fiberglass-reinforced concrete polymer. Covers shall be gasketed, with logo on top - such as ELECTRIC, TELECOM, or other applicable logo.

D. Device boxes in stud walls (3-1/2" thickness or greater) shall be galvanized steel, no less than 2-1/2" deep.

E. Device boxes in furred and stud walls less than 3-1/2" thick shall be galvanized steel, 1 1/2 inch deep.

F. Wall boxes in four inch block shall be galvanized steel 2-1/2" deep. And In walls larger than four inch block, galvanized steel 3-1/2" deep.

G. Boxes may be ganged as required for multiple devices.

H. Through-wall boxes are prohibited.

I. Lighting outlet boxes and specified junction boxes shall be galvanized steel, 4" octagon with cover. Ratings shall not be less than N.E.C.

J. Floor boxes shall be standard depth-cast steel, flush-mounted cover with brass. Furnish with threaded brass receptacle covers, unless noted otherwise.

K. Telephone/data boxes shall be standard gauge galvanized steel, 4" square.

L. All wiring devices shall be installed in metallic boxes. Provide outlet boxes, receptacle boxes, junction boxes, and ceiling boxes at locations noted on the drawings and at locations required by the NEC.

M. Provide pull boxes as shown on the Drawings, as required by code, and as needed for ease of construction. Pull boxes shall remain accessible.

N. Outlets shall be installed in the locations shown on the drawings.

O. Contractor shall study the general building plans in relation to the space surrounding each outlet, in order that his work may fit with all other work required by these Specifications.

P. All steel supports for outlet boxes shall be furnished and installed.

Q. Outlet boxes for use with exposed steel conduit shall be cast steel. Cast metal fittings shall be cast steel. Cast metal fittings shall be Crouse-Hinds, Square D, Bryant, or equal.

R. All openings in electrical equipment, enclosures, cabinet, outlet and junction boxes shall be by means of welded bosses, standard knockouts, or shall be sawed, drilled, or punched with tools specially made for the purpose. The use of a cutting torch is prohibited.

S. All conduit connections to electrical boxes shall be made with locknuts and nonmetallic bushings.

T. Locknuts shall be drawn down tight to make ground connection between the conduit and box.

U. All boxes shall be labeled to indicate circuit (and/or feeder name). Boxes larger than 4x4 shall be provided with painted or adhesive labels. Boxes 4x4 and smaller may be legibly labeled via permanent marker. Refer to wiring devices specs regarding cover plate labeling.

WIRE AND CABLES

A. All wire used throughout work shall be soft drawn copper of not less than 98% conductivity. Aluminum is not acceptable.

B. Wire and cable shall be new; and manufacturer's name permanently marked on the outer covering at regular intervals.

C. Conductors AWG No. 8 or smaller may be solid or stranded; larger sizes shall be stranded. Stranded conductors shall be used for final connections to vibrating equipment (such as motors).

D. All conductors for general wiring shall be insulated with THHN/THWN-2 insulation.

E. Conductors shall have solid-colored insulation with specific colors as noted on the details (based on voltage and phase), and shall be in compliance with the N.E.C.

F. Grounding conductors, if insulated, shall have green solid-colored insulation.

G. All wiring shall be installed in conduit.

H. Conductors shall be sized according to the N.E.C., yet not smaller than shown on the drawings.

I. Minimum conductor size for 20A receptacle and lighting circuits shall be No. 12 AWG. Where one-way circuit distance from panelboard to furthest circuit load exceeds 65 feet, use No. 10 AWG minimum; over 100 feet, use No. 8 AWG.

J. All wiring shall be fully polarized throughout using white (or gray depending on voltage) wires for neutral and making all switching connections in colored hot wires.

K. No conductors shall be drawn into conduits until all work which may cause damage is completed; only approved cable lubricants shall be used.

L. As far as practical, all feeder cables shall be continuous from feeder source to load termination without using splices at intermediate pull boxes.

M. All cable terminals, taps, and splices shall be made with solderless, pressure type connectors; connectors shall be Type QA-B or Q2A as manufactured by Burndy, Okonite, McJunkin or equal.

N. The minimum free length of conductor at each box for the connection of a fixture, switch or receptacle shall be 8".

O. Each branch circuit requiring a neutral connection shall be provided with a dedicated neutral conductor, even if multiple branch circuits share the same raceway. No shared neutrals permitted.

P. Boxes for light switches or other lighting control devices shall be provided with a neutral conductor from each branch circuit brought to devices in the box.

PANELBOARDS

A. The panelboards shall be of dead-front construction with code gauge galvanized steel box, and door-in-door hinged front finished in gray lacquer.

B. Doors shall be provided with a plate tumbler lock with flush handle and typed directory card and holders.

C. Panels rated 225 amp or less shall be Square D, type NQ, or equal, unless noted otherwise.

D. Panel rated 400 to 800 amp shall be Square D, "I-Line" or equal, unless noted otherwise.

E. Panels greater than 800 amps are considered to be Distribution Switchboards.

F. Furnish and install electrical system as described on Drawings, panel schedules and electrical riser diagram.

G. Panels shall be surface mounted or recessed (flush) as specified on the panel schedule.

H. All panelboards shall be circuit breaker type unless noted otherwise.

I. Voltage, phase, wires, poles/breaker space as specified on schedules and riser.

J. Solid neutral.

K. Panels rated at 10,000 AIC shall have stab-in breakers.

L. Panels rated greater than 10,000 AIC shall have bolt-on breakers.

M. Breakers size and quantity as shown on Schedules.

N. Breakers listed as "spare" shall be furnished and installed.

O. Panel listed with "space" shall be provided with extra space for future breakers.
   1. Each "space" shall be on one single pole. For I-Line (or similar) panels, each "space" shall be understood to be the mounting space required to accommodate one 20A single-pole breaker.

P. Panels rated 225 amps or less shall be provided as full 42 space panels unless specifically noted otherwise.

Q. Unless otherwise indicated on Drawings, install all panels with the top of the trim 6'-3" above finished floor.

R. Install panelboards in location shown on the Drawings.

S. Panelboards shall be mounted with screws, bolts, or anchors as required.

T. Panels shall not be supported by conduit alone.

U. Panelboards shall be internally and externally clean and shall be free from dust, debris, and non-intentional markings. Panelboards shall be vacuumed and wiped down (internally and externally) prior to substantial inspection.

V. Neutral and equipment grounding terminals shall be electrically isolated, unless specifically noted otherwise.

W. Panelboard cover shall be provided with engraved phenolic plastic identification and wiring color code nameplates. Refer to detail on drawings.

X. Mount a typewritten directory behind glass or plastic on the inside of each panel door, showing panel information, circuit number, and complete description of all outlets on each circuit. Handwritten edits are not acceptable. Directory shall be installed prior to substantial inspection

CIRCUIT BREAKERS

J. Breakers shall be of the size specified on the Panel Schedules.

K. Breakers rated at 10,000 AIC shall be plug-on.

L. Breakers rated greater than 10,000 AIC shall be bolt-on.

M. Breakers shall have visual trip indicators.

N. Breaker sizes shall be verified against equipment it serves.

O. Current-limiting breakers shall be used where shown on panel schedules.

P. On three-phase panels, breakers shall alternate consecutivelybetween busses to provide a balanced load.

Q. Breaker types listed below are for Square D equipment and are listed for reference only.

R. For Type NQ Panels, the main breaker shall be equal to the Square D numbers as listed below:
   1. 10,000 AIC - Q1B, Q2, KA, LA
   2. 22,000 AIC - Q1B-VH, Q2-H, KA, LA
   3. 42,000 AIC - KH, LA
   4. 65,000 AIC - KH, LH

J. For type NQ Panels, the branch breakers shall be equal to Square D models:
   1. 10,000 AIC - QO, QOH, Q1-H
   2. 22,000 AIC - QO-VH, Q1-VH
   3. 42,000 AIC - Q1H
   4. 65,000 AIC - QH

K. For I-Line panels, the main breaker shall be 65,000 AIC rated, and equal to Square D Models FA, FH, KA, LA, LH, MA, MH.

L. For I-Line panels, the branch breakers shall be rated at 65,000 AIC and equal to Square D Models FA, FH, FY, IF, Q2, Q2-H, Q2H, KA, KH, IK, Q4, LA, LH, MA, MH, ME.

M. Breakers listed as current limiting breakers shall be equal to Square D - I - Limiterm, in IF or IK frame sizes.

N. Furnish and install all circuits breakers as described on the panel schedules and drawings.

O. Contractor shall be responsible for confirming brand, breaker type, mounting type, kits, accessories, and compatibility of new breakers to be installed in existing panelboards. Existing panelboard information and characteristics shall be field-verified.

P. Unconnected, spare, and future breakers shall be switched to and remain in the "OFF" (open) position.

FUSES

A. General duty fuses shall be equal to Bussman 250 volt, "Tron JJN" Fuses.

B. Motor circuit fuses and compressor fuses shall be equal to Bussman 250V, "Fusetron FRN" dual element fuses.

C. Current-limiting fuses shall be equal to Bussman KTN-R fast acting fuses.

DISCONNECTS

A. Ampere-rated for general disconnects.

B. Horsepower-rated for motor disconnects.

C. Meet Federal Spec. W-S-865c for Heavy Duty Switches.

D. UL Listed.

E. Grey baked enamel finish.

F. Quick-break operating mechanism.

G. Visible handle.

H. Meets NEMA KSI-1975 for Type HD.

I. Indoor disconnects shall be NEMA 1, unless noted otherwise.

J. Outdoor disconnects shall be NEMA 3R, unless noted otherwise.

K. Supply and install a disconnecting means for each motor where required by N.E.C. or if shown on drawings.

L. Locate disconnect as shown or as near as possible to motor within N.E.C compliance.

M. Disconnects furnished as an integral part of any piece of equipment shall be acceptable in lieu of a safety switch.

N. Switches shall be fused where shown on drawings.

O. Motor-rated switches shall be acceptable as disconnects for motors of 1/3 HP or less.

P. Disconnect switches shall be provided with machine-produced labels (on front cover) to indicate circuit source, circuit number, and load served.

STARTERS

A. Provide magnetic or manual starters and associated equipment as required for each motor.

B. Each starter shall have properly sized thermal overload protection for the motor it serves, based on nameplate FLA markings.

C. Overloads shall be manual reset type.

D. Supply and install magnetic motor starters with appropriate control buttons or switches for each piece of equipment unless other specifications call for starter to be furnished with equipment.

E. Contractor shall coordinate with both general contractor and mechanical contractor to assure that a starter has been provided for all equipment.

F. Where both a disconnect switch and motor starter are required in the same location, a combination starter shall be acceptable in lieu of individual components.

WIRING DEVICES

A. Model or part number listed below are for reference and establishing quality.

B. In so far as practical, all wiring devices shall be of the same manufacturer.

C. All catalog numbers listed are Hubbell unless noted.

D. Acceptable manufacturers shall be Hubbell, Pass and Seymour, Leviton, or Arrow-Hart.

E. Contractor shall be responsible for confirming device color and cover plate color with owner and architect.

F. General Purpose Receptacles and single appliance type receptacles.
   1. General purpose receptacles shall be specification grade, 120 volt AC, 20 amp, NEMA 5-20R, grounding type, capable of accepting 15A and 20A plugs.
   2. Catalog numbers shall be:
      a. Single receptacle: 5361
      b. Duplex receptacle: 5362

G. Special purpose receptacle
   1. Special purpose receptacles shall be installed as required and as shown to match equipment and appliance cord.
   2. Refer to plan and/or equipment schedule for NEMA configuration.

H. Switches
   1. General light switches shall be specification grade, 125-277 volt, 20 amp, heavy duty.
   2. Catalog numbers shall be: SPST 1221 DPST 1222 3-Way 1223 4-Way 1224
   3. Motor rated switches shall be used for any switches controlling singles phase motors.
   4. Motor rated switches shall be 120-277 volt and rated in accordance with the voltage and amperage of the motor.

I. Cover plates
   1. In finished areas with flush boxes: All cover plates shall be thermoplastic smooth nylon for finished areas. Thermoset or residential grade materials not acceptable.
   2. In areas with exposed raceway and surface-mounted boxes: cover plates shall be galvanized steel.
   3. Exterior receptacles shall be provided with metallic, gasketed, weatherproof while-in-use covers.
   4. Contractor shall provide adhesive label on each cover plate to indicate source panel and circuit number. Also, circuit number shall be written on back side of cover plate.
   5. Catalog numbers:
      a. Switches: Single gang--P1, Two gang-----P2, Three gang---P3
      b. Single Receptacle 93091
      c. Duplex Receptacle Single gang P8, Two gang P82
      d. Special purpose outlets: Single gang P7882, Duplex 7423
      e. Weatherproof covers: Switches 7420 Receptacles 5205W0

GROUNDING AND GROUND FAULT PROTECTION

A. All equipment and circuits shall be grounded and bonded in accordance with the National Electrical Code, Article 250.

B. Provide ground fault protection for all circuits noted on the drawings as GFI, all receptacles indicated on the drawings via GFI receptacle symbol, all restroom/bathroom receptacles, all receptacles in exterior locations, and for all locations required by N.E.C. Standard receptacles shall be considered ground fault protected if in series with the GFI protection provided in an upstream GFI receptacle or GFI breaker.

C. Provide ground fault protection on all temporary construction circuits as required by OSHA or the National Electrical Code.

D. Service-entrance neutral and separately-derived neutrals shall each be bonded to the grounding electrode system once and as located on the electrical riser diagram.

E. Grounding electrode conductors shall be sized per N.E.C., yet no smaller than shown on drawings.

F. All conduits shall contain a continuous "green" solid-colored equipment grounding conductor, sized in accordance with Table 250.122 of the N.E.C.

G. All metallic raceway shall be bonded to the equipment grounding conductor.

H. Provide driven ground rod(s) as close as possible to the service entrance location, sized and separated as shown on the drawings and in accordance with N.E.C.

I. Nearest metallic cold water supply pipe, concrete encased steel, building steel, and other electrodes per N.E.C. shall be bonded together to create the grounding electrode system.

J. Mechanical Equipment
   1. All mechanical equipment motors shall have grounded cases.
   2. All equipment shall have its metallic enclosure, frame, etc. bonded to the circuit equipment grounding conductor.

DATA/TELEPHONE

A. Provide conduit system for Telephone/Data including fish wires, boxes and blank plates.

B. Conduit, cabling, and outlets shall be provided as shown on the drawings and the telephone riser.

C. Consult the local utility representative prior to bidding for any special requirements. All electrical work required by the telephone company shall be furnished and performed by the Electrical Contractor.

DIMMERS

A. LED 0-10V, unless otherwise required to be compatible with controlled fixture(s).

B. Dimmers shall not rely on equipment grounding conductor as a return current path for control power, provide a neutral for this purpose.

C. Dimmers shall be fully compatible with the drivers they control.

SURGE PROTECTION DEVICE (SPD)

A. Provide TYPE 2 on panels as shown.

B. Provide SPD with integral audible and visible alarm features to indicate loss of protection.

C. MOV TYPE meeting UL-1449, 3rd edition, TYPE 2 listing.
   1. 120KA Surge Current Rating (L-L and L-G)
   2. 20KA Nominal Discharge Current.
   3. 200KA SCCR (Short Circuit Current Rating)
   4. 150V MCOV (Maximum Continuous Operating Voltage) for 120/240V and 208Y/120V systems, 320V MCOV for 480Y/277V systems.

DETAIL NOTES:
1. ALL GEC, SBJ, ETC. RUN SEPARATELY SHALL BE PROTECTED BY A CONDUIT SYSTEM.
2. ALL SYSTEM GROUNDING OR BONDING CONDUCTORS SHALL GENERALLY BE ENCLOSED BY A RGS CONDUIT. PROVIDE GROUND BUSHING ON EACH END AND BOND CONDUCTORS TO RACEWAY SYSTEM.
3. SYSTEM BONDING CONDUCTORS THAT PENETRATE CONCRETE SLABS SHALL BE ENCLOSED BY A PVC CONDUIT. PROVIDE BELL END FITTING ON EACH END AND SEAL. CONDUITS TERMINATING AT A STUB-UP SHALL BE FLUSH WITH FLOOR.

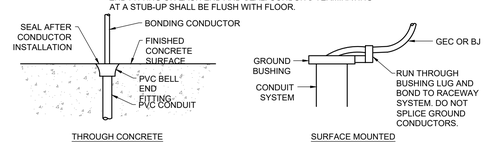

THROUGH CONCRETE SURFACE MOUNTED

TYPICAL GEC OR BJ IN CONDUIT SYSTEM

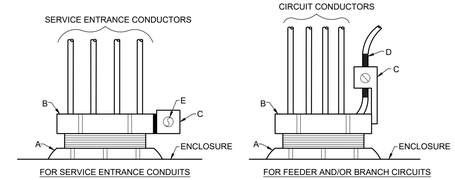

FOR SERVICE ENTRANCE CONDUITS FOR FEEDER AND/OR BRANCH CIRCUITS

DETAIL NOTES:
A. LOCK-NUT ASSEMBLY
B. METAL GROUNDING BUSHING
C. COPPER GROUND LUG
D. COPPER GROUND CONDUCTOR. REMOVE INSULATION AT BUSHING, RUN THROUGH BUSHING LUG, AND BOND TO RACEWAY SYSTEM. DO NOT SPLICE OR TAP.
E. CONTINUOUS COPPER GROUND CONDUCTOR FROM GROUND BUS THROUGH EACH BUSHING. DO NOT SPLICE OR TAP.

TYPICAL GROUND BUSHING INSTALLATION DETAIL

COBURN AND ASSOCIATES, INC
MECHANICAL• ELECTRICAL• CONSULTING ENGINEERS
P.O. BOX 577 HIGH SPRINGS, FLORIDA
PH 386-454-3748 CELL 352-538-0163
CERTIFICATE OF AUTHORIZATION 3687

CHAD J. FRALICK LICENSE No 73811 STATE OF FLORIDA PROFESSIONAL ENGINEER

THIS ITEM HAS BEEN DIGITALLY SIGNED AND SEALED BY CHAD J. FRALICK PE ON THE INDICATED DATE. USING A DIGITAL SIGNATURE AND SEAL. PRINTED COPIES OF THIS DOCUMENT ARE NOT CONSIDERED SIGNED AND SEALED AND THE SIGNATURE MUST BE VERIFIED ON ANY ELECTRONIC DOCUMENTS. IF THERE IS ANY DOUBT AS TO THE AUTHENTICITY OF THE DOCUMENT, THE SIGNATURE AND SEAL MUST BE VERIFIED.

Digitally signed by Chad J Fralick
Date: 2022.06.30 22:43:49 -04'00'

CA JOB NO. 2205	DRAWN KLL	APPROVED CJF
DATE OF ISSUE	7/1/2022	
REVISIONS		

PROJECT TITLE AND LOCATION:
RENOVATIONS FOR
SUNSTOP STORE #303
1166 E DUVAL ST
LAKE CITY, FL 32055

SHEET TITLE
ELECTRICAL SPECIFICATIONS

E500