NANTUCKET - M

FLORIDA DESIGN CRITERIA

REVISED 05-03-07

BUILDING DATA

FLORIDA BUILDING CODE 2004 : RESIDENTIAL, 2005 and 2006 SUPPLEMENT
FLORIDA BUILDING CODE 2004 : PLUMBING, 2005 and 2006 SUPPLEMENT
FLORIDA BUILDING CODE 2004 : MECHANICAL, 2005 and 2006 SUPPLEMENT
FLORIDA BUILDING CODE 2004 : FUEL GAS, 2005 and 2006 SUPPLEMENT

NATIONAL ELECTRICAL CODE 2005

STRUCTURAL DESIGN PARAMETERS: ASCE 7-2002 (PER FRC 2004 : SECTION R301.2.1)

CLASSIFICATION : 2

OCCUPANCY: RESIDENTIAL

BUILDING DESIGN: ENCLOSED

WIND SPEED: 125 MPH - 3 SECOND GUST (FRC 2004 : SECTION R301.2.1.3)

EXPOSURE: B

INTERNAL PRESSURE COEFFICIENT: GCpi = +/- 0.18

IMPORTANCE FACTOR: 1.0

NUMBER OF STORIES: TWO STORY

BUILDING MEAN ROOF HEIGHT: 25 FEET, MAX.

WOOD FRAMING INSPECTION

ALL PLUMBING, ELECTRICAL AND MECHANICAL ROUGH-INS MUST BE COMPLETE, INSPECTED AND APPROVED BEFORE REQUESTING THE FRAMING INSPECTION. (FRC 2004, SECTION R109.3)

TERMITE TREATMENT

THE BUILDING AND PATIO SLAB HAVE RECIEVED A COMPLETE TREATMENT FOR THE PREVENTION OF SUBTERRANEAN TERMITES. THE TREATMENT IS IN ACCORDANCE WITH THE RULES AND LAWS OF THE FLORIDA DEPARTMENT OF AGRICULTURE AND CONSUMER SERVICES. (FRC 2004, SECTION R320)

BORA CARE : TERMITE TREATMENT

THE BUILDING HAS RECIEVED A COMPLETE TREATMENT FOR THE PREVENTION OF SUBTERRANEAN TERMITES. THE TREATMENT IS IN ACCORDANCE WITH THE RULES AND LAWS OF THE FLORIDA DEPARTMENT OF AGRICULTURE AND CONSUMER SERVICES. (FRC 2004, SECTION R320.1.8)

EXTERIOR WINDOWS AND GLASS DOORS

EXTERIOR WINDOWS AND GLASS DOORS SHALL BE TESTED BY AN APPROVED INDEPENDENT TESTING LABORATORY, AND SHALL BE LABELED WITH AN APPROVED LABEL (FRC 2004, SECTION R613)

SEE MANUFACTURER'S DETAIL SHEETS FOR DESIGN CRITERIA AND INSTALLATION METHODS.

WINDBOURNE DEBRIS REGIONS

WINDOWS IN BUILDINGS LOCATED IN WIND-BOURNE DEBRIS REGIONS SHALL HAVE GLAZED OPENINGS PROTECTED FROM WIND-BOURNE DEBRIS. GLAZED OPENING PROTECTION FOR WIND-BORNE DEBRIS SHALL MEET THE REQUIREMENTS OF THE LARGE MISSILE TEST OF ASTM E 1996 AND OF ASTM E 1886, SSTD 12, ANSI/DASMA 115 (FOR GARAGE DOORS) OR TAS201, 202 AND 203 . (FRC 2004, SECTION R301.2.1.2)

INDEX OF DRAWINGS

FLOOR TRUSS

REVISIONS :

08-14-07 REV. CODE INFORMATION

Maronda Homes
(407) 321-0064 4005 MARONDA WAY SANFORD, FLORIDA

9TM01201 JAX
12-1 9TM

FLORIDA THIS STRUCTURE WAS DESIGNED IN ACCORDANCE AND MEETS THE REQUIREMENTS OF SECTION R301 OF THE FLORIDA BUILDING CODE 2004 RESIDENTIAL AND 2005, 2006 SUPPLEMENT FOR 125 MPH - 3 SEC. GUST. HI-EXPOSURE B, ENCLOSED BUILDING. ALL CONNECTORS HAVE BEEN CHECKED TO WITHSTAND ALL APPLICABLE LOADS.

pxf:\houses_05\nantucket\125\nd-m-125.000

AMERICANA | COVER SHEET

NANTUCKET

ELEVATION "M"

GARAGE: RIGHT

125 MPH

DRAWN BY:

RELEASE DATE: 08-01-06

14:59:05

Maronda Systems
4005 Maronda Way
Sanford, FL 32771
(407)321-0064

Elmer Bergman, P.E.
License No. 50158

MAY 28 2008

SHEET:

0m

PLOT DATE: 16 JAN 2008

FLORIDA BUILDING CODE 2004 : RESIDENTIAL

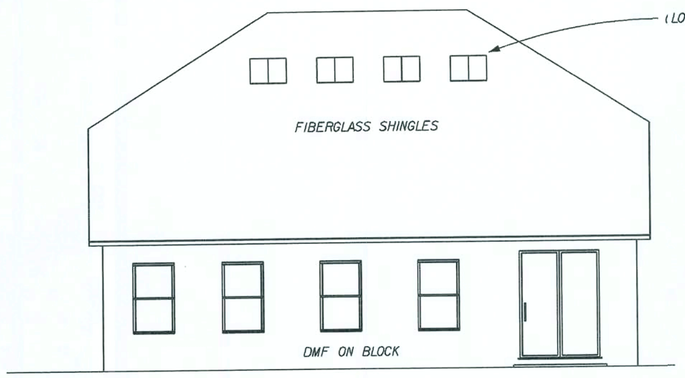

D — REAR ELEVATION
SCALE : 1/8" = 1'-0"

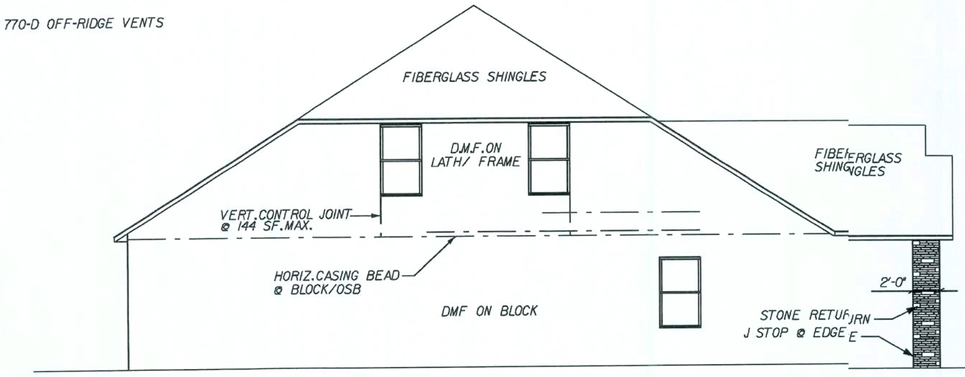

C — LEFT ELEVATION
SCALE : 1/8" = 1'-0"

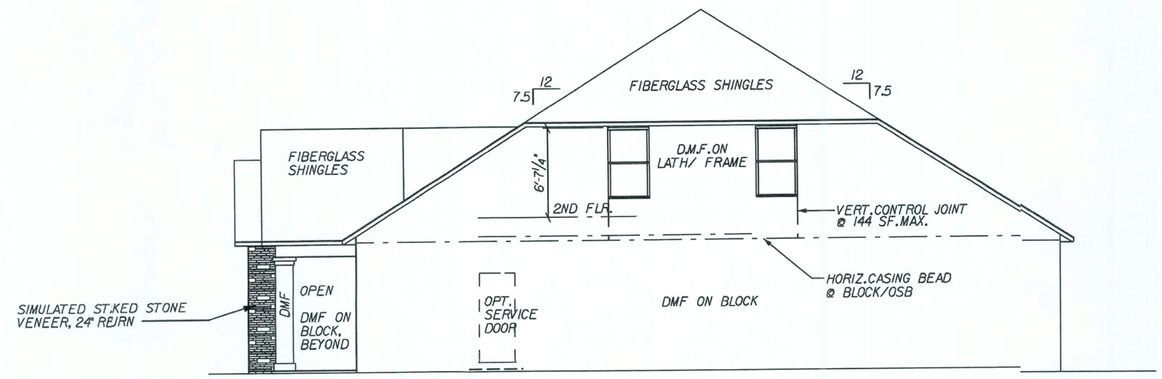

B — RIGHT ELEVATION
SCALE : 1/8" = 1'-0"

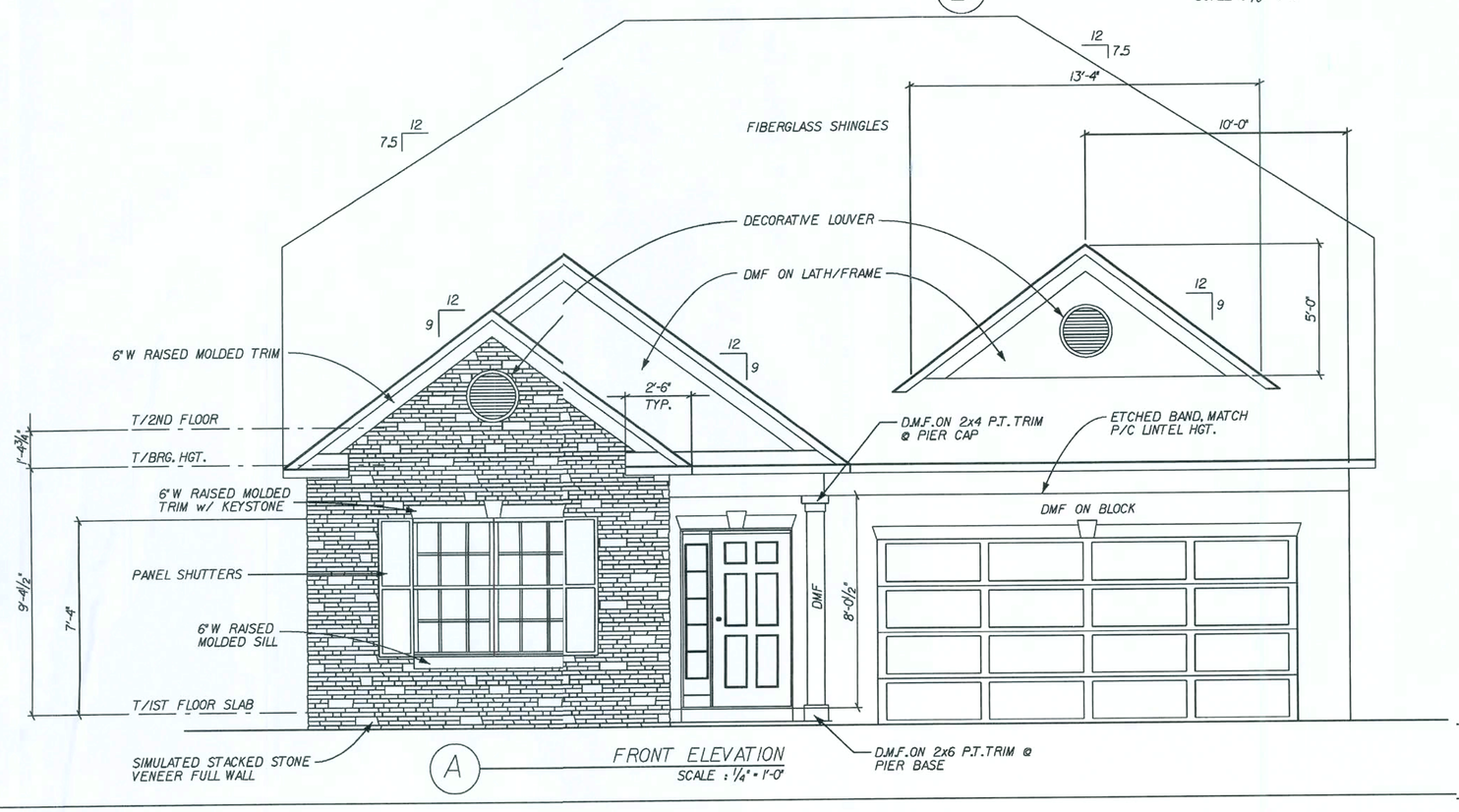

A — FRONT ELEVATION
SCALE : 1/4" = 1'-0"

GENERAL ELEVATION NOTES:

REVISED 01-05-06

1. DMF - DECO MASONRY/STUCCO FINISH SHALL COMPLY WITH THE REQUIREMENTS OF ATSM C926 AND C1063.
2. EAVE & GABLE OVERHANGS 12" ALUM FASCIA AND SOFFITS. PLUMB CUT WITH LEVEL RETURNS.
3. 7/8" MIN. THICKNESS DMF OVER LATH/FRAME AND 1/2" MIN. THICKNESS OVER BLOCK
4. DMF/STUCCO INSTALLED OVER PAPER-BACKED LATH AND HOUSEWRAP @ ALL EXTERIOR WOOD FRAME CONSTRUCTION.

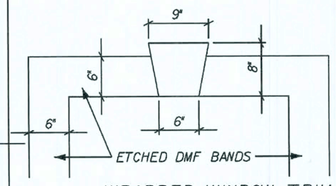

WRAPPED WINDOW TRIM
SCALE: 3/4" = 1'-0"

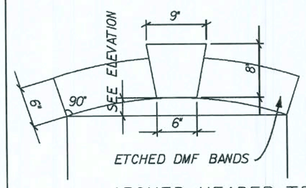

ARCHED HEADER TRIM
SCALE: 3/4" = 1'-0"

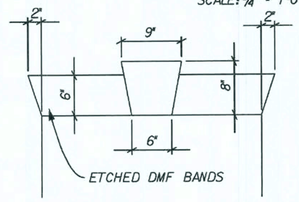

STRAIGHT HEADER TRIM
SCALE: 3/4" = 1'-0"

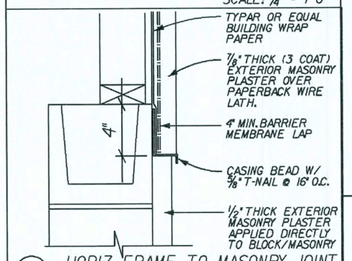

1 HORIZ. FRAME TO MASONRY JOINT
REVISED 12-11-06 SCALE: N.T.S.

REVISIONS :

11-14-06	REV. SLIDER TO 6'-0" x 8'-0"
02-09-07	REV. ROOF SLOPE PER 2nd FLR
04-03-07	REV. PER VALUE ENG'G
04-26-07	REV. SIDE WINDOW HGT.
09-18-07	REV. PIER TRIM
09-21-07	DEL. VINYL SIDING
11-01-07	REV. RAISED MOLDED TRIM NOTE

Maronda Homes
(407) 321-0064 4005 MARONDA WAY SANFORD, FLORIDA

FLORIDA ARCHITECTURE WAS DESIGNED IN ACCORDANCE AND MEETS THE REQUIREMENTS OF THE FLORIDA BUILDING CODE 2004 : RESIDENTIAL AND 2006 SUPPLEMENT

AMERICANA — EXT. ELEVATIONS

NANTUCKET

ELEVATION - M

GARAGE: RIGHT

DRAWN BY: SWe

RELEASE DATE: 08-01-06

14:59:06

PLOT DATE: 16 JAN 2008

Maronda Systems
4005 Maronda Way
Sanford, FL 32771
(407)321-0064

Elmer Bergman, P.E.
License No. 50158

MAY 28 2008

SHEET:
1m

FLORIDA BUILDING CODE 2004 : RESIDENTIAL

p:\f\houses_05\nantucket\sfd\nd-m.001

GENERAL FOUNDATION NOTES:

ALL FOOTING REBAR SHALL BE CONTINUOUS (2) #5 BARS GRADE 40 STEEL w/ 3" MIN. COVERAGE, U.N.O.

ALL VERTICAL REBAR, DOWN REBAR, DOWEL REBAR AND BOND BEAM REINFORCEMENT SHALL BE #5 BARS GRADE 40 STEEL

PLUMBING PASSING UNDER OR THROUGH A FOOTING SHALL BE ENCASED IN A PIPE TWO (2) SIZES LARGER THAN THE PLUMBING PIPE.

■ = INDICATES FILLED CELL WITH REBAR
□ = INDICATES FILLED CELL WITHOUT REBAR

ALL CONCRETE GROUTED CELLS FILLED w/ 3000 psi CONCRETE SHALL BE CLEAR UNOBSTRUCTED CONTINUOUS 3" x 3" MIN. CELLS w/ (1) #5 BAR GRADE 40 STEEL TIED AT FOOTING LINTEL STEEL. PROVIDE INSPECTION HOLE AT BOTTOM OF GROUTED CELL STACK.

TYPICAL CONCRETE SLAB: 3½" DEEP POURED 2500 psi CONCRETE SLAB w/ 6x6 10/ WIRE OR FIBER MESH ON VISQUEEN VAPOR BARRIER w/ ALL JOINTS TAPED OVER CLEAN COMPACTED (2000 psf. MIN.) TERMITE TREATED FILL.

FOR INSTALLATION OF GROUND ROD, SEE TYP.CONC.ENCASED ELECTRODE DETAIL SHEET* FTG

SEE DRAWING * FP1 FOR UNDERGROUND PLUMBING AND MECH. CHASES FOR LOCATIONS

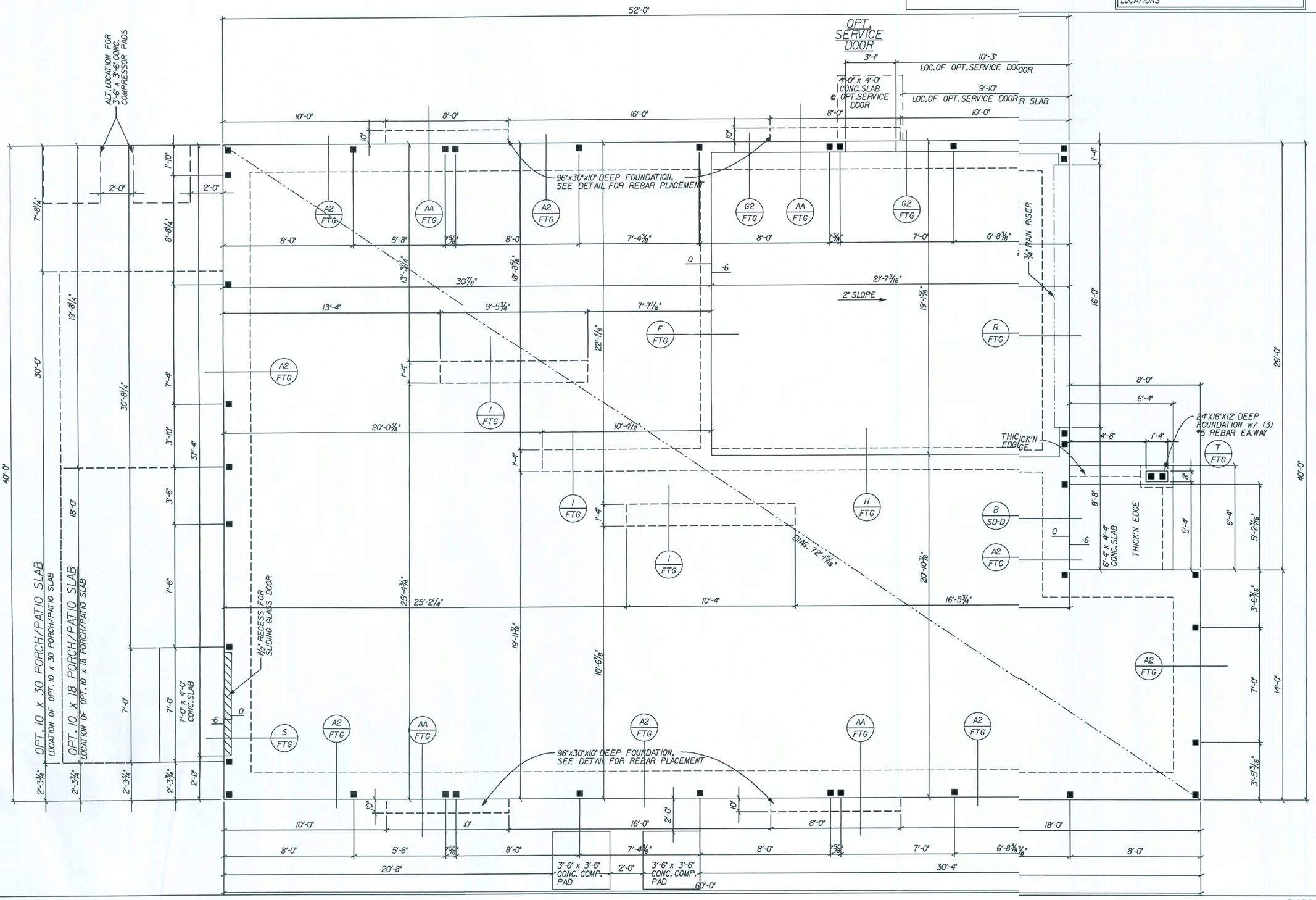

REVISIONS :	
02-09-07	REV. DOWN CELLS PER 2nd FLR
03-26-07	REV. FRONT FOR 8" SET-BACK
03-27-07	REV. PER FLOOR FRAMING
08-14-07	REV. CODE INFORMATION

Maronda Homes

(407) 321-0064 4005 MARONDA WAY SANFORD, FLORIDA

FLORIDA
THIS STRUCTURE WAS DESIGNED IN ACCORDANCE AND MEETS THE REQUIREMENTS OF SECTION R301 OF THE FLORIDA BUILDING CODE 2004 RESIDENTIAL AND 2005, 2006 SUPPLEMENT, RESULTING IN 125 MPH 3 SEC. GUST PRESSURE OR ENCLOSED BUILDING. ALL CONNECTORS HAVE BEEN CHECKED TO WITHSTAND ALL APPLICABLE LOADS.

AMERICANA — FOUNDATION PLAN

NANTUCKET

ELEVATION "M"

DRAWN BY: GARAGE: RIGHT

RELEASE DATE: 08-01-06 125 MPH

Maronda Systems
4005 Maronda Way
Sanford, FL 32771
(407)321-0064

Elmer Bergman, P.E.
License No. 50158

MAY 28 2008

SHEET: 2m

PLOT DATE: 16 JAN 2008 14:59:07

daf\houses_05\nantucket\125\nd-m-125.002

FLORIDA BUILDING CODE 2004 : RESIDENTIAL

GENERAL FIRST FLOOR NOTES:

REVISED 10-10-07

ALL EXTERIOR WALLS SHALL BE CONSIDERED SHEAR WALLS MINUS ALL WINDOW AND DOOR OPENINGS.

EXTERIOR WALLS TO BE 7⅝" CONCRETE BLOCK w/ P.T. FURRING STRIPS IN A/C AREA, TOTAL WIDTH = 8⅝"

EXTERIOR OPENING DIMENSIONS ARE TO FACE OF MASONRY OPENING.

INTERIOR LOAD BEARING WALLS TO BE 2x4 WOOD FRAME WALLS w/ STUDS @ 16" O.C. SEE STRUCTURAL WALL SCHEDULE SHEET = TR1

INTERIOR NON-LOAD BEARING WALLS TO BE NOMINAL 3⅝" MTL STUD, 25 ga. UNO.

ALL WOOD NOT SEPERATED FROM AND/OR IN DIRECT CONTACT WITH CONCRETE OR MASONRY SHALL BE "PRESSURE TREATED WOOD"

SEE LINTEL SHEET FOR LINTEL SIZES OVER WINDOWS AND DOORS. PRECAST LINTELS BY CAST-CRETE.

ALL COMPOSITE BEAMS OVER WINDOW AND DOOR OPENINGS ARE TO BE NOMINAL WIDTH AND 16" NOMINAL HEIGHT, LOWEST THE 8" NOMINAL HEIGHT FULL COURSE OF AN 8" TOP COURSE (BOND BEAM BLOCK) FILLED w/ 3000 psi CONCRETE w/ (1) GRADE = 40 CONTINUOUS HORZ. #5 REBAR AND AN 8" HIGH STRENGTH PRECAST LINTEL. LOWER COURSE WHICH SHALL BE UNFILLED, UNO. FOR FILLED PRECAST LINTELS, USE 3000 psi CONCRETE w/ ⅜" AGGREGATE. FOR REINFORCED PRECAST LINTELS, USE GRADE 40 REINFORCING STEEL.

PROVIDE SAFETY GLAZING AT: T = TEMPERED ALL WINDOWS OVER BATH TUBS. ALL WINDOWS WITHIN 24" OF A DOOR SWING. ALL SLIDING GLASS DOORS. ALL FIXED GLASS LITES OVER 30 SQ.FT. ALL LITES WITHIN 18" OF THE FLOOR AND INDIVIDUAL PANE GREATER THAN 9 SQ.FT. ALL SHOWER ENCLOSURES.

PROVIDE AFCIs (arc-fault circuit interrupters) IN ALL DWELLING UNIT BEDROOMS PER NEC, SECTION 210-12.

THE A/C DISCONNECT WILL BE LOCATED WITHIN 3 FEET OF THE COMPRESSOR.

SCALLOPED ARCH WINDOW AND LINTEL

PROVIDE HEADER w/ (1) 2x4 JACK AND (1) 2x4 STUD, EACH SIDE OF OPENING (NO STRAPPING REQUIRED, UNO). HDR TO BE NO.2 SYP SEE PLAN FOR SIZE

ALL DRYWALL TO BE ½" THICK, UNO.

SC DOOR = MIN. 1⅜" THICK SOLID CORE DOOR

SQUARE FOOTAGE:

1st FLOOR LIVING	1790	SQ.FT.
2nd FLOOR LIVING	934	SQ.FT.
TOTAL LIVING	2724	SQ.FT.
GARAGE AREA	417	SQ.FT.
COVERED ENTRY	40	SQ.FT.
TOTAL AREA	3181	SQ.FT.

OPENING PRESSURES 125mph

REVISED 09-12-07

A	B	D	E
+28.1 / -30.5	+23.7 / -27.6	+24.9 / -29.7	+24.2 / -27.1
C			
+28.1 / -37.6			

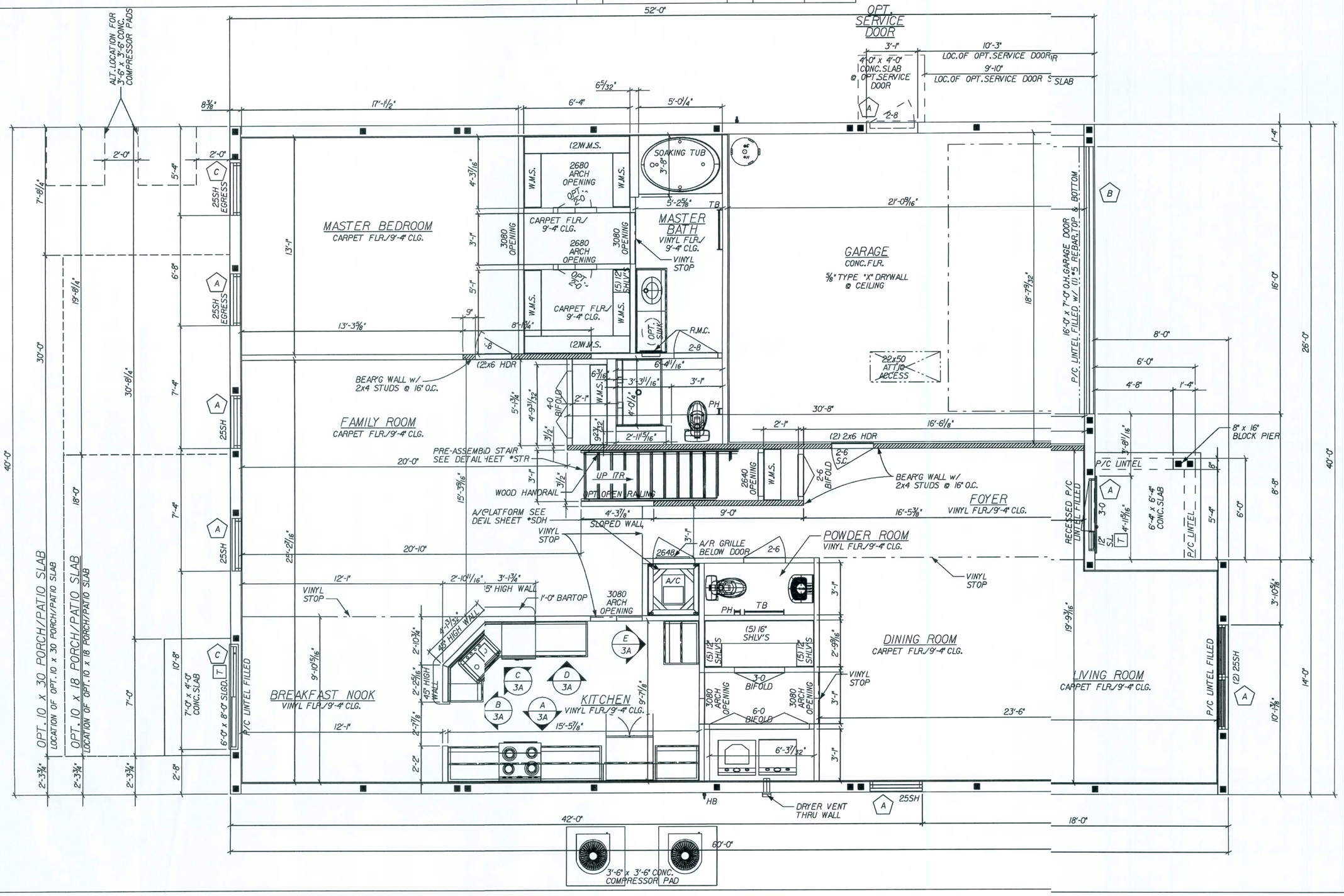

REVISIONS :

11-14-06	REV. SLIDER TO 6'-0" x 8'-0"
12-19-06	REV. SERVICE DOOR SWING
02-09-07	REV. PER 2nd FLR
03-26-07	REV. FRONT FOR 8" SET-BACK
03-27-07	REV. PER FLOOR FRAMING
10-25-07	REV. MSTR BATH WIDTH
08-14-07	REV. CODE INFORMATION

Maronda Homes

(407) 321-0064 4005 MARONDA WAY SANFORD, FLORIDA

FLORIDA THIS STRUCTURE WAS DESIGNED IN ACCORDANCE AND MEETS THE REQUIREMENTS OF SECTION 1609 OF THE FLORIDA BUILDING CODE, 2004 : RESIDENTIAL AND 2005, 2006 SUPPLEMENT FOR 125 MPH - 3 SEC. GUST, HIGH EXPOSURE, B, ENCLOSED BUILDING. TO COMPLY WITH THE FLORIDA ENERGY CODE TO WITHSTAND ALL APPLICABLE LOADS.

AMERICANA

IST FLOOR PLAN

NANTUCKET

ELEVATION "M"

GARAGE: RIGHT

125 MPH

DRAWN BY:

RELEASE DATE: 08-01-06

PLOT DATE: 16 JAN 2008

14159.08

pxf\houses_05\nantucket\25\nat-m-125.003

Maronda Systems
4005 Maronda Way
Sanford, FL 32771
(407)321-0064

Elmer Bergman, P.E.
License No. 50158

MAY 28 2008

SHEET:

3m

FLORIDA BUILDING CODE 2004 : RESIDENTIAL

FASTENERS SCHEDULE USING 3/16" X 2 1/4" TAPCONS THROUGH BUCK INTO BLOCK

NOTE 1) 1/2 WIDE: 2 FASTENERS IN HEADER-JAMB
NOTE 2) 2 WIDE: 2 FASTENERS IN HEADER-JAMB
NOTE 3) 3 WIDE: 3 FASTENERS IN HEADER-JAMB
NOTE 4) 2 HIGH: 2 FASTENERS IN EA. SIDE JAMB
NOTE 5) 3,4,OR 5 HIGH: 3 FAST. EA. SIDE JAMB
NOTE 6) 6 HIGH 26 3/4": 4 FASTENERS IN EACH SIDE JAMB
NOTE 7) 438 WINDOW INTO FRAME OPENING: #10 X 1 3/4" SCREWS
NOTE 8) SGD FASTENED WITH: #10 1 3/4": PANHEAD ALL HOLES SILLS 3/16" X 1 3/4" ANCHORS EVERY HOLE

WINDOW NOTES

F.O. WIDTH IS FROM JACK TO SILL.
F.O. HEIGHT IS FROM SILL TO BEAM.
M.O. WIDTH IS FROM BLOCK TO BLOCK.
M.O. HEIGHT IS FROM LIP OF SILL TO PRECAST.
1st. DIMENTION IS ALWAYS WIDTH.
UNIT OF MEASURE IS INCH.

ATTENTION

SCHEDULES FOR NORANDEX WINDOW FASTENERS AND CAST-CRETE LINTELS AS SHOWN, ARE TAKEN DIRECTLY FROM TABLES SUPPLIED BY THE RESPECTIVE MANUFACTURERS, AND ARE PROVIDED FOR CONVENIENCE ONLY.

NORANDEX SERIES (MO)437-(FO)438 WINDOW SIZE CHART

SERIES 500/502 SGD DOOR OPENINGS

SIZE	M.O.	FAST.		SIZE	M.O.	FAST.	
6068	75 1/2 X 81 3/4	8		6080	75 1/2 X 97 3/4	8	

SERIES (MO)437 - (FO)438 OPENINGS

SIZE	SINGLE M.O.	FAST.	DOUBLE M.O.	FAST.	SIZE	SINGLE F.O.	FAST.	DOUBLE F.O.	FAST.
25	37 3/4 X 63	2.5	74 3/4 X 63	2.5	25	36 1/2 X 62 1/2	7		

MATERIALS

1. f'c precast lintels = 3500 psi.
2. f'c prestressed lintels = 6000 psi.
3. f'c grout = 3000 psi w/ maximum 3/8" aggregate.
4. Concrete masonry units (CMU) per ASTM C90 w/minimum net area compressive strength = 1900 psi.
5. Rebar provided in precast lintel per ASTM A615 GR60. Field rebar per ASTM A615 GR40 or GR60.
6. Prestressing strand per ASTM A416 grade 270 low relaxation.
7. 7/3 wire per ASTM A510.
8. Mortar per ASTM C270 type M or S.

TYPICAL GARAGE DESIGNATION

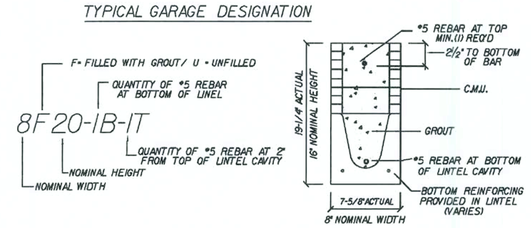

TYPICAL DESIGNATION

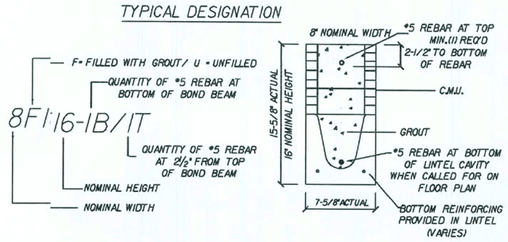

REVISED 12/29/04

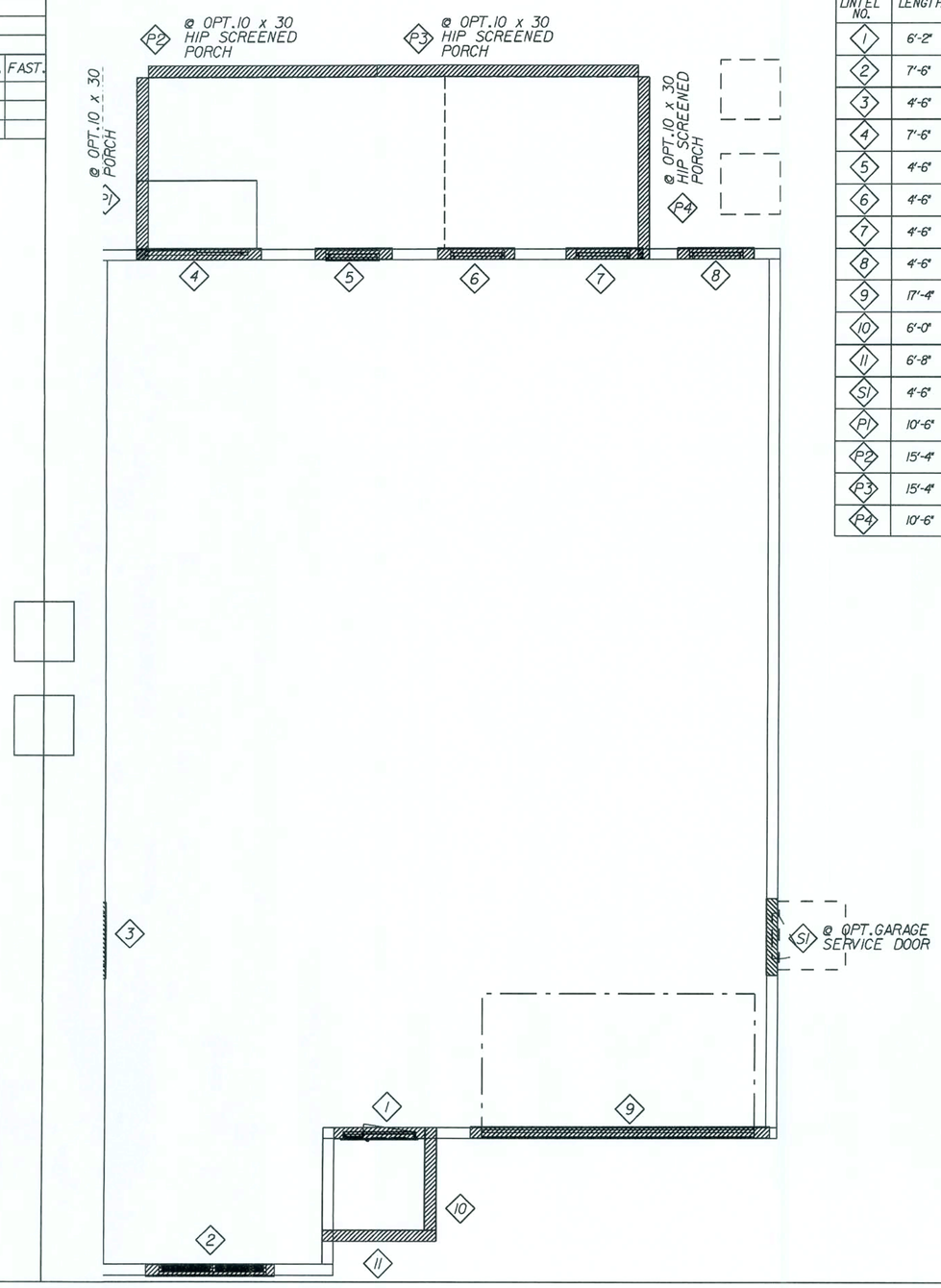

CAST-CRETE LINTEL SCHEDULE

LINTEL NO.	LENGTH	TYPE	APPLIED LOADS (PLF) GRAVITY	APPLIED LOADS (PLF) UPLIFT	SAFE LOADS GRAVITY	SAFE LOADS UPLIFT	COMMENT
1	6'-2"	8RF22-0B/IT	318	155	7747	2758	RECESSED
2	7'-6"	8F24-0B/IT	316	154	2698	2314	-
3	4'-6"	8U24-0B/IT	200	200	4576	4292	-
4	7'-6"	8F16-0B/IT	357	216	2632	1634	-
5	4'-6"	8U24-0B/IT	357	216	4576	4292	-
6	4'-6"	8U24-0B/IT	357	216	4576	4292	
7	4'-6"	8U24-0B/IT	357	216	4576	4292	
8	4'-6"	8U24-0B/IT	357	216	4576	4292	-
9	17'-4"	8F36-1B/IT	357	216	2047	1470	GARAGE DOOR
10	6'-0"	8F16-0B/IT	200	200	1631	2093	
11	6'-8"	8F16-0B/IT	200	200	2632	1634	
S1	4'-6"	8U24-0B/IT	200	200	4576	4292	@ OPT. SERVICE DOOR
P1	10'-6"	8F8-1B/IT	533	429	643	530	@ OPT. PORCH
P2	15'-4"	8F8-1B/IT	109	184	412	230	@ OPT. PORCH
P3	15'-4"	8F8-1B/IT	109	184	412	230	@ OPT. PORCH
P4	10'-6"	8F8-1B/IT	533	429	643	530	@ OPT. PORCH

THE SPECIFIED LINTELS ON SHEET WL1 ARE MANUFACTURED BY CAST-CRETE CORP. ALTERNATE MANUFACTURED LINTELS ARE AVAILABLE "BY OTHERS". SOLE AND FULL RESPONSIBILITY IS RETAINED BY THE SUB-CONTRACTOR IN THE SELECTION OF THE ALTERNATE LINTELS AS HAVING EQUAL TO OR GREATER THAN THE ACTUAL GRAVITY AND UPLIFT LOADS, THAT ARE LISTED ON THIS HOUSE SPECIFIC WL1 LINTEL SCHEDULE.

REVISED 04-02-07

REVISIONS:
11-14-06 REV. SLIDER TO 6'-0" x 8'-0"
03-26-07 REV. FRONT FOR 8" SET-BACK
08-14-07 REV. CODE INFORMATION

Maronda Homes
(407) 321-0064 4005 MARONDA WAY SANFORD, FLORIDA

FLORIDA:
THIS STRUCTURE WAS DESIGNED IN ACCORDANCE AND MEET'S THE REQUIREMENTS OF SECTION R301 OF THE FLORIDA BUILDING CODE, 2004 : RESIDENTIAL AND 2005, BOCA SUPPLEMENT WITH 125 MPH 3 SEC. GUST, I=1.0, EXPOSURE B, ENCLOSED BUILDING. ALL CONNECTORS HAVE BEEN CHECKED TO WITHSTAND ALL APPLICABLE LOADS.

P:\Houses_05\nantucket\125\nat-m-125.wll

AMERICANA | WINDOW/LINTEL

NANTUCKET

ELEVATION "M"

GARAGE: RIGHT

125 MPH

DRAWN BY:

RELEASE DATE: 08-01-06

14,590.9

Maronda Systems
4005 Maronda Way
Sanford, FL 32771
(407)321-0064

Elmer Bergman, P.E.
License No. 50158

MAY 28 2008

SHEET:
WL1m

PLOT DATE: 16 JAN 2008

FLORIDA BUILDING CODE 2004 : RESIDENTIAL

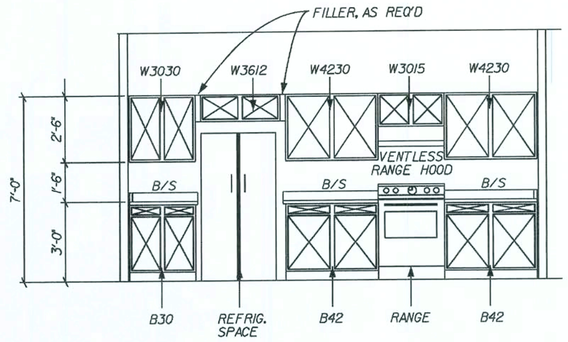

A KITCHEN ELEVATION

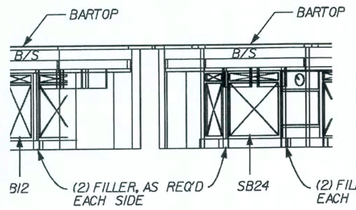

B KITCHEN EEVATION

C KITCHEN ELEVATION

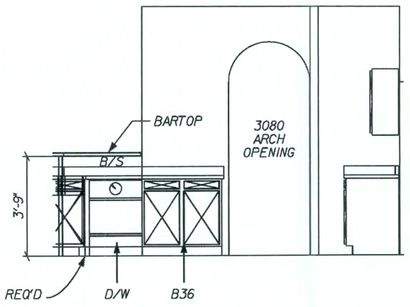

D KITCHEN ELEVATION

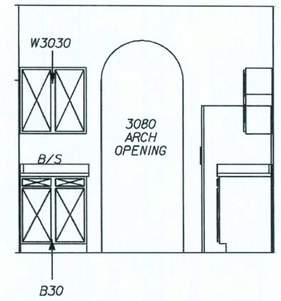

E KITCHEN ELEVATION

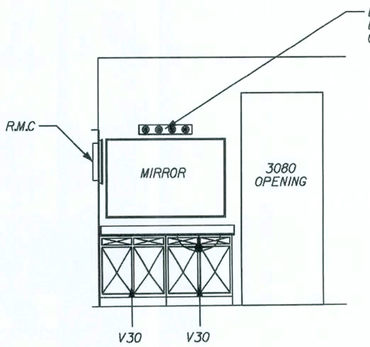

F MASTER BATH ELEVATION

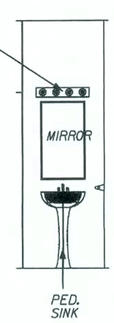

G POWDER ROM

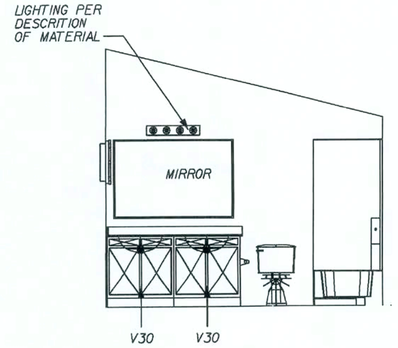

H HALL BATH VANITY

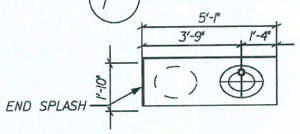

MASTER BATH LAV TOP PLAN

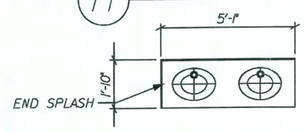

HALL BATH LAV TOP PLAN

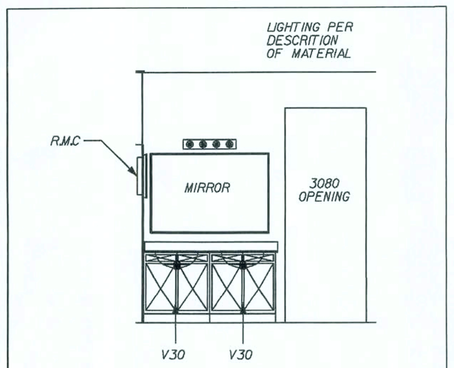

F MASTER BATH ELEVATION OPT. DBL. VANITY SINK

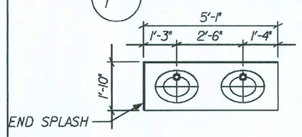

MASTER BATH LAV TOP PLAN

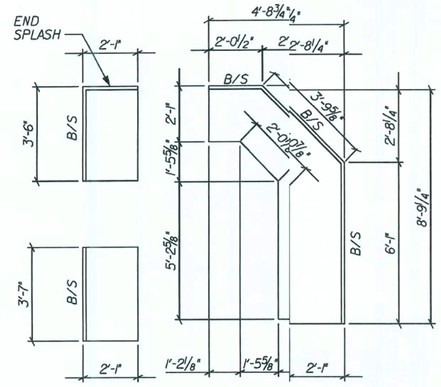

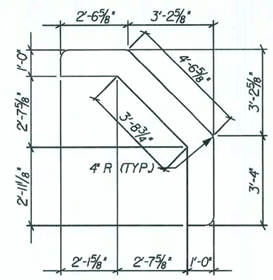

KITCHEN BAR TOP PLAN

FOR COUNTER TOP CONSTRUCTION ONLY. NOT FOR FIELD USE

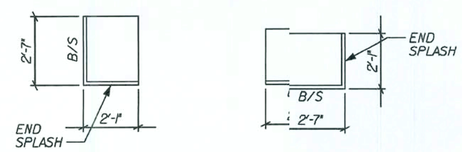

KITCHEN COUNTER TOP PLAN

FOR COUNTER TOP CONSTRUCTION ONLY. NOT FOR FIELD USE

REVISIONS :

12-28-06	ADDED DIM. @ BAR TOP
03-27-07	REV. PER FLOOR FRAMING
04-16-07	ADD OPT. SINK M. BATH

Maronda Homes
4005 MARONDA WAY SANFORD, FLORIDA
(407) 321-0064

FLORIDA STRUCTURE WAS DESIGNED IN ACCORDANCE AND MEETS THE REQUIREMENTS OF THE FLORIDA BUILDING CODE 2004 : RESIDENTIAL AND2005, 2006 SUPPLEMENT

AMERICANA INTERIOR ELEVATIONS

NANTUCKET

ALL ELEVATIONS

GARAGE: RIGHT

DRAWN BY:

RELEASE DATE: 08-01-06

SHEET:

3A

PLOT DATE: 16 JAN 2008 14:59:10

p:\f1houses_05\nantucket\std\nat03a

FLORIDA BUILDING CODE 2004 : RESIDENTIAL

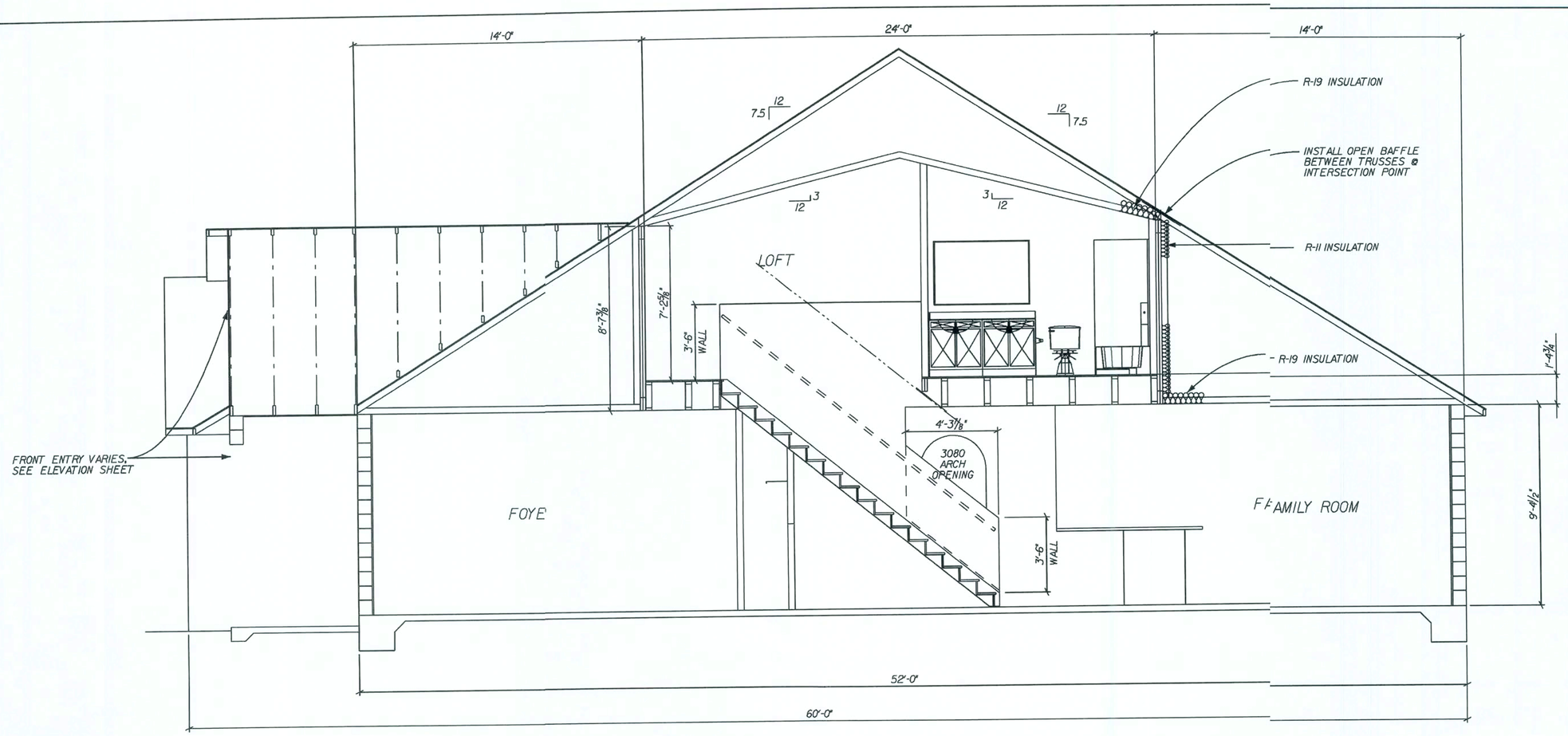

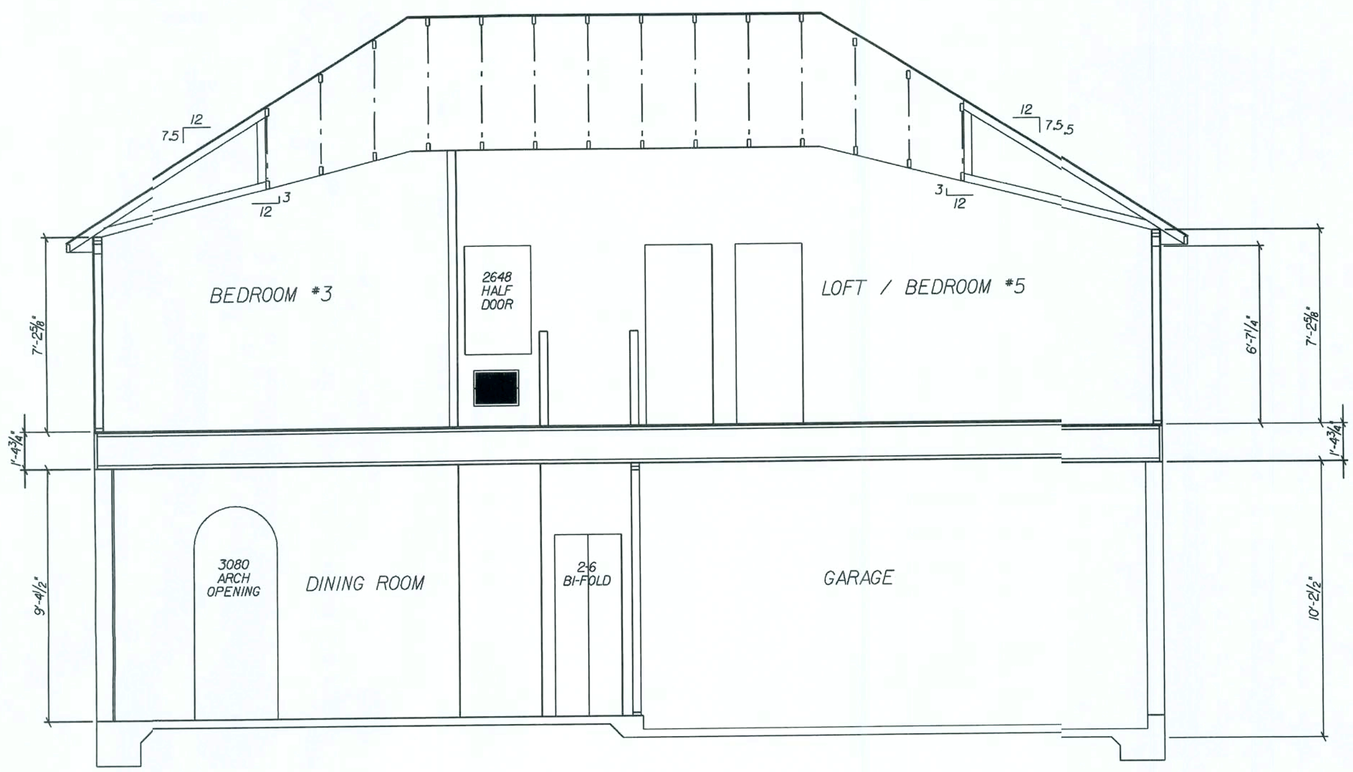

REVISIONS :

02-09-07	REV. ROOF SLOPE PER 2nd FLR
03-27-07	REV. PER FLOOR FRAMING
04-03-07	REV. PER VALUE ENG'G
04-26-07	REV. SIDE WINDOW HGT.

Maronda Homes

(407) 321-0064 4005 MARONDA WAY SANFORD, FLORIDA

FLORIDA: THIS STRUCTURE WAS DESIGNED IN ACCORDANCE WITH THE REQUIREMENTS OF THE FLORIDA BUILDING CODE 2004 : RESIDENTIAL ANDE2005, 2006 SUPPLEMENT

AMERICANA BUILD. SECTION

NANTUCKET

ALL ELEVATIONS

GARAGE: RIGHT

DRAWN BY:

RELEASE DATE: 08-01-06

14,591I

p:\houses_05\nantucket\sfd\nd.csu

Maronda Systems
4005 Maronda Way
Sanford, FL 32771
(407)321-0064

Elmer Bergman, P.E.
License No. 50158

MAY 28 2008

SHEET:

CSU

PLOT DATE: 16 JAN 2008

FLORIDA BUILDING CODE 2004 : RESIDENTIAL

GENERAL SECOND FLOOR NOTES:

ALL EXTERIOR WALLS SHALL BE CONSIDERED SHEAR WALLS MINUS ALL WINDOW AND DOOR OPENINGS.

EXTERIOR WALLS TO BE 4" THICK, CONSISTING OF 2x4 #2 S.Y.P. STUDS w/ 7/16" OSB SHEATHING, TYPICAL, U.N.O.

EXTERIOR OPENING DIMENSIONS ARE TO FACE OF ROUGH OPENING

INTERIOR NON-LOAD BEARING WALLS TO BE NOMINAL 3 5/8" MTL STUD, 25 ga. U.N.O.

PROVIDE SAFETY GLAZING AT: [T] = TEMPERED
- ALL WINDOWS OVER BATH TUBS.
- ALL WINDOWS WITHIN 24" OF A DOOR SWING.
- ALL SLIDING GLASS DOORS.
- ALL FIXED GLASS LITES OVER 30 SQ.FT.
- ALL LITES WITHIN 18" OF THE FLOOR AND IF LARGER THAN 9 SQ.FT.
- ALL SHOWER ENCLOSURES.

PROVIDE AFCIs (arc-fault circuit interrupters) IN ALL DWELLING UNIT BEDROOMS PER NEC, SECTION 210-12

ALL BEDROOM WINDOWS ARE CONSIDERED EGRESS UNLESS OTHERWISE NOTED

SEE SHEET #WL FOR WINDOW AND LINTEL SCHEDULES AND DETAILS

OPENING PRESSURES 125mph:

A: +28.1 / -30.5	B: +23.7 / -27.6	E: +24.2 / -27.1	REVISED 09-12-07
C: +28.1 / -37.6	D: +24.9 / -29.7		

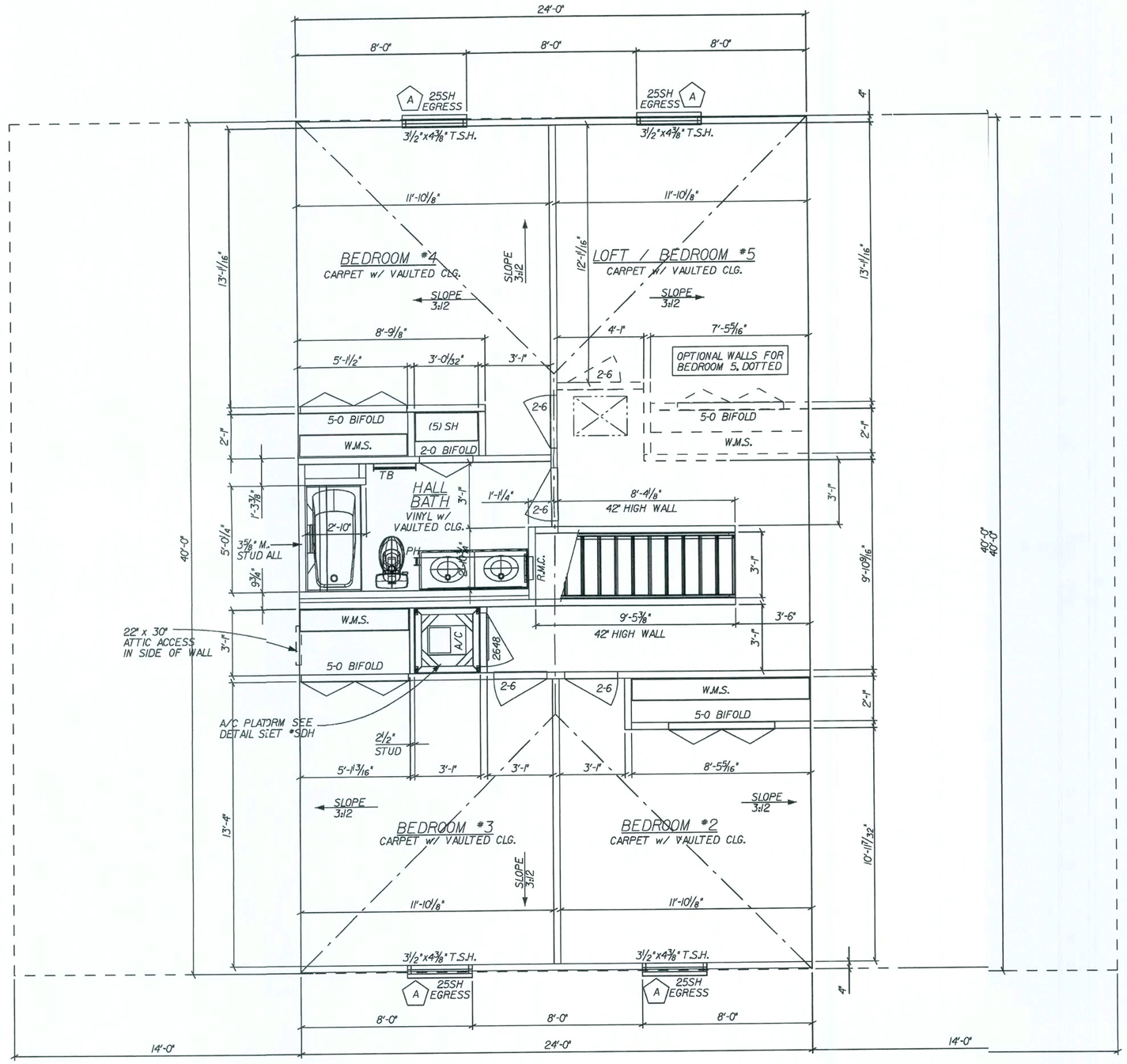

FLORIDA BUILDING CODE 2004 : RESIDENTIAL

REVISIONS :
03-27-07 REV. PER FLOOR FRAMING
08-14-07 REV. CODE INFORMATION

Maronda Homes
(407) 321-0064 4005 MARONDA WAY SANFORD, FLORIDA

FLORIDA
THIS STRUCTURE WAS DESIGNED IN ACCORDANCE AND MEETS THE REQUIREMENTS OF SECTION R301 OF THE FLORIDA BUILDING CODE 2004 : RESIDENTIAL AND 2005, 2006 SUPPLEMENTS FOR EXPOSURE "B" SITES. GUSTS HAVE BEEN CHECKED. ALL CONNECTORS HAVE BEEN CHECKED TO WITHSTAND ALL APPLICABLE LOADS.

pw:\houses_05\nantucket\125\nat-125.004

AMERICANA

2ND FLOOR PLAN

NANTUCKET

GARAGE: RIGHT

125 MPH

DRAWN BY: SWe

RELEASE DATE: 02-08-07

14.59x12

Maronda Systems
4005 Maronda Way
Sanford, FL 32771
(407)321-0064

Elmer Bergman, P.E.
License No. 50158

MAY 28 2008

SHEET: 4

PLOT DATE: 16 JAN 2008

VENTILATION OF ATTIC SPACE: NANTUCKET

REQUIREMENTS:
TOTAL NET FREE VENTILATION AREA SHALL NOT BE LESS THAN 1/300 OF THE AREA OF SPACE VENTILATED. PROVIDED AT LEAST 50 PERCENT OF THE REQUIRED VENTILATING AREA IS BALANCED BETWEEN RIDGE AND EAVE.
(FBCR 2004, SECTION R806.2)

SOFFIT VENTILATION:
ALSCO - QUAD 4 VENTED SOFFIT (16" WIDE) = 26.1 si/LF
26.1 si / 1.34' = 19.5 si/LF PER 12" wide soffit

RIDGE VENTILIATION:
LOMANCO - 770-D ROOF LOUVER [OFF-RIDGE VENT] = 140 si

CALCULATIONS:
MAIN ROOF
2188 SF / 300 = 7.3 SF TOTAL VENTILATION REQUIRED
7.3 SF / 2 = 3.65 SF BALANCED RIDGE & SOFFIT

SOFFIT:
60 L.F. SOFFIT VENT @ 19.5 si/LF = 1170.0 si
1170.0 si / 144 si PER SF = 8.125 SF ACTUAL

RIDGE:
3.65 SF * (140 si/144 si PER SF) = 3.5 UNITS or 4 UNITS REQ'D

GENERAL ROOF NOTES:

7/16" OSB SHT'G w/ 8d RING/SCREW SHANK NAIL (AS PER R803.2.3.1) 4" O.C. EDGE & 6" O.C. FIELD, (3" O.C. @ GABLE END TRUSS) w/ CLIPS ON PRE-ENGINEERED TRUSSES @ 24" O.C.

TOTAL ROOF SHEATHING:

99 SHEETS

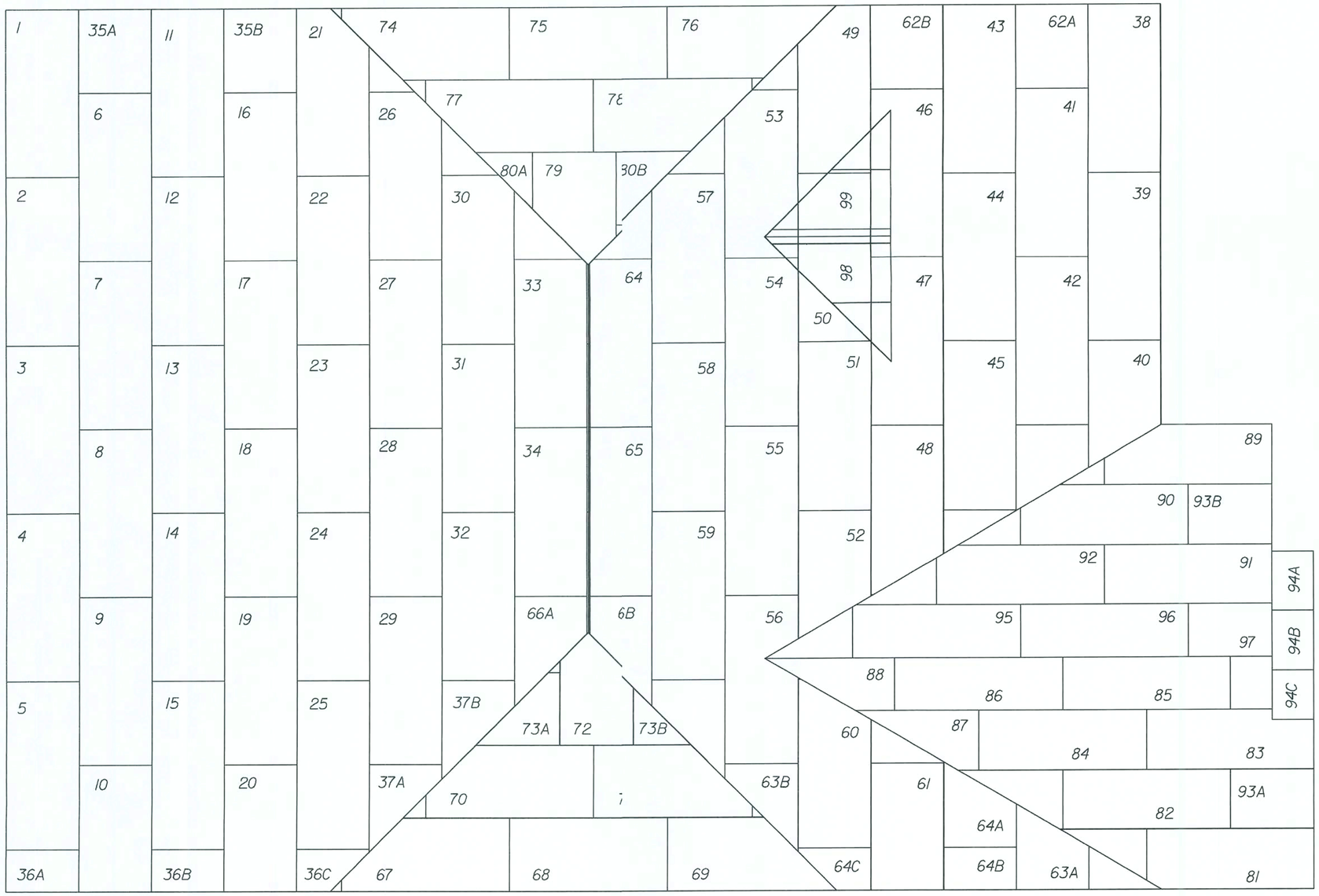

REVISIONS :
03-26-07 REV. FRONT FOR 8' SET-BACK
REVISED 05-07-07

Maronda Homes
(407) 321-0064 4005 MARONDA WAY SANFORD, FLORIDA

FLORIDA:
THIS STRUCTURE WAS DESIGNED IN ACCORDANCE AND MEETS THE REQUIREMENTS OF THE FLORIDA BUILDING CODE 2004 : RESIDENTIAL AND 2005, 2006 SUPPLEMENT

AMERICANA ROOF SHEATHING

NANTUCKET

ELEVATION "M"

DRAWN BY:
GARAGE: RIGHT
RELEASE DATE: 08-01-06

SHEET:
RS/m

PLOT DATE: 16 JAN 2008
14:59:13
p:\fl\houses_05\nantucket\sfd\nd-m.rsl

FLORIDA BUILDING CODE 2004 : RESIDENTIAL

FASTNER SCHEDULE

THD48 HANGER: (28) 16d x 3½" NAILS @ HEADER
(16) 10d x 3" NAILS @ TRUSS

FLOOR FRAMING:

ITEM	DESCRIPTION
FA - FD	16" WOOD TRUSS

ERECTION/INSTALLATION NOTES

WARNING!:

THE ERECTION/INSTALLATION CONTRACTOR SHOULD PROVIDE ADEQUATE RIGGING (CRANE, TAGLINES, SPREADER BARS) FOR SUFFICIENT CONTROL DURING LIFTING AND PLACEMENT TO ASSURE SAFETY TO PERSONNEL AND TO PREVENT DAMAGE TO FLOOR DECK PANELS AND PROPERTY.

NOTE:

ALL FLOOR DECK PANELS UP TO 30': KEEP LINE ANGLE FAT CRANING POINTS AT 60' OR LESS.

ALL FLOOR DECK PANELS 30' TO 60': ATTACH FLOOR DECK PANEL TO SPREADER BAR WITH LINES THAT SLOPE INWARD OR "TOE-IN". LINES THAT "TOE-OUT" COULD CAUSE FLOOR DECK PANEL TO BUCKLE.

FLOOR FRAMING NOTES:

16" DEEP WOOD FLOOR TRUSSES @ 24" O.C., U.N.O.

1¼" x 16" HIGH WOOD RIM BOARD

DESIGN LOADS:
TC LIVE LOAD = 40 psf
TC DEAD LOAD = 10 psf
BC DEAD LOAD = 5 psf
TOTAL LOAD = 55 psf

DEFLECTION:
LL = L/360
TL = L/240

ROOF LOADS ASSUMED TO BE BEARING ON PERIMETER WALLS ONLY.

FLOOR SHEATHING:
¾" T&G WOOD DECKING GLUED & NAILED w/ 7d x 2¼" SCREW SHANK NAIL @ 4" O.C. EDGES AND 8" O.C. FIELD (TYP.) or 16ga x 1¾" STAPLE @ 2" O.C. EDGES AND 4" O.C. FIELD. SEE SHEET * FDO. GLUE MUST BE INCLUDED IN THE GROOVE OF EACH PANEL AND BTWN SHEATHING AND TRUSSES.

FLOOR CONNECTORS:

- FA3, RIM BOARD CONNECTION DETAIL * B/WS-S1 & LADDER TRUSS CONNECTION DETAIL * E/WS-S1
- TYPICAL ATTACHMENT TO BEARING WALL w/ (2) 10d NAILS, TOE-NAILED. SEE DETAIL D/WS-S1
- BLK SOLID WOOD FIRE BLOCKING SEE DETAIL F/WS-S1.
- LPTA, SEE DETAIL SHEET B/WS-S2
- TA14, SEE DETAIL SHEET E/WS-S2

REVISED 05-02-07 WALL SPACING

REVISIONS :

12-11-06	ADDED FA3's
12-11-06	REV. HANGER/TRUSSES
4-30-07	REV. FLOOR LAYOUT
6-13-07	REVISED PANEL ID'S
8-20-07	ADDED 2x4 LET-IN BRACE
8-20-07	FIELD INSTALL FIRE BLOCKING
10-23-07	FADDED FB-A TRUSS
3-6-08	REMOVED CRANING BLOCKS
08-14-07	REV. CODE INFORMATION

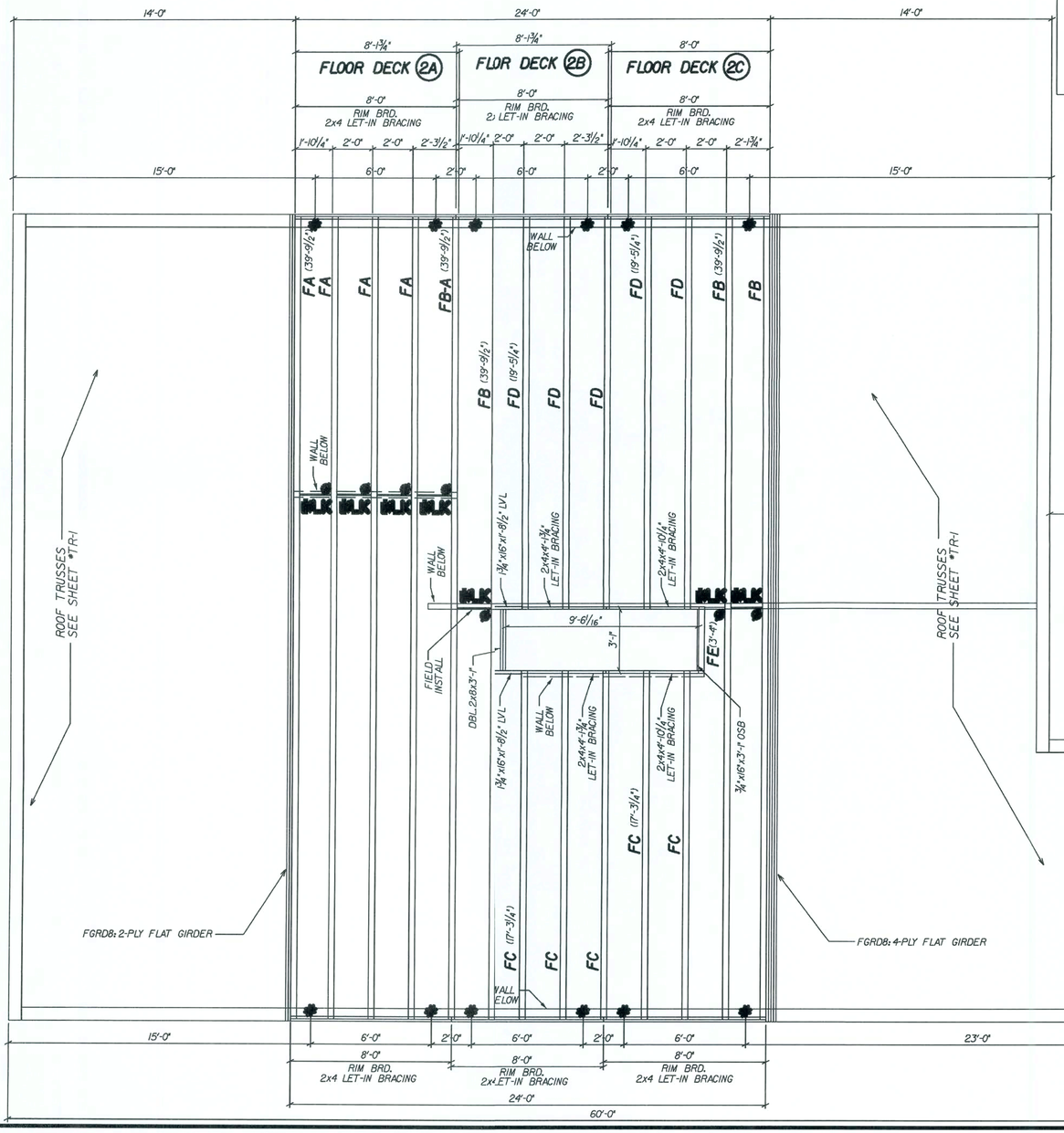

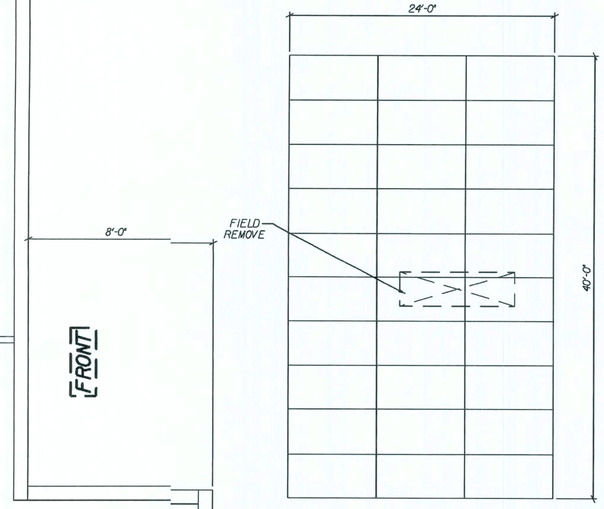

30 SHEETS - 4x8 SHEATHING

SECOND FLOOR SHEATHING LAYOUT

Maronda Homes
(407) 321-0064 4005 MARONDA WAY SANFORD, FLORIDA

FLORIDA,
THIS STRUCTURE WAS DESIGNED IN ACCORDANCE WITH THE FLORIDA BUILDING CODE 2004 RESIDENTIAL AND 2005 NDS SUPPLEMENT FOR 125 MPH WIND GUST, HI-EXPOSURE B, ENCLOSED BUILDING. ALL CONNECTORS HAVE BEEN CHECKED TO WITHSTAND ALL APPLIED LOADS.

AMERICANA | FLOOR FRAMING
NANTUCKET
ELEVATION "M"
DRAWN BY: GARAGE: RIGHT
RELEASE DATE: / / 125 MPH

Maronda Systems
4005 Maronda Way
Sanford, FL 32771
(407)321-0064

Elmer Bergman, P.E.
License No. 50158
MAY 28 2008

SHEET: FT2

PLOT DATE: 07 MAR 2008 08606x43

g:\mhc\houses\fl\nantucket\dor det\rfl\rfl-fm125712

FLORIDA BUILDING CODE 2004 : RESIDENTIAL

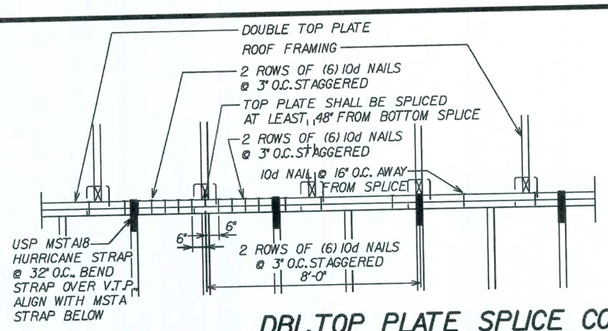

DBL.TOP PLATE SPLICE CONN.

REVISED 02-15-07 : MSTA18 STRAP

SCALE: N.T.S.

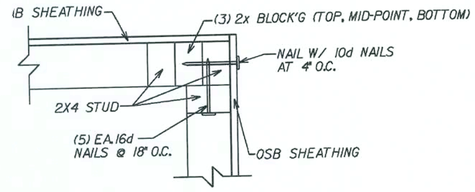

1 TOP CORNER DETAIL

SCALE: N.T.S.

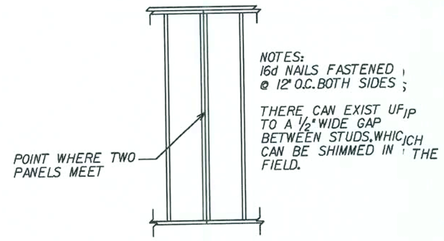

A WALL JOINT DETAIL

SCALE: N.T.S.

WALL STRAP KEY

(UNDER SHEATHING)

- (S1) - RSPT4

(ON TOP OF SHEATHING)

- (S2) - MSTA12 (BENT)
- (S3) - MSTA18
- (S4) - MP6F
- (S5) - MSTA30
- (S6) - MSTA24

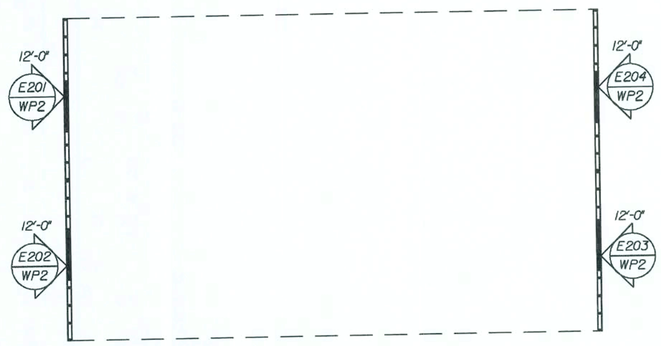

SECOND FLOOR WALL PANEL LAYOUT

ALL ELEVATIONS

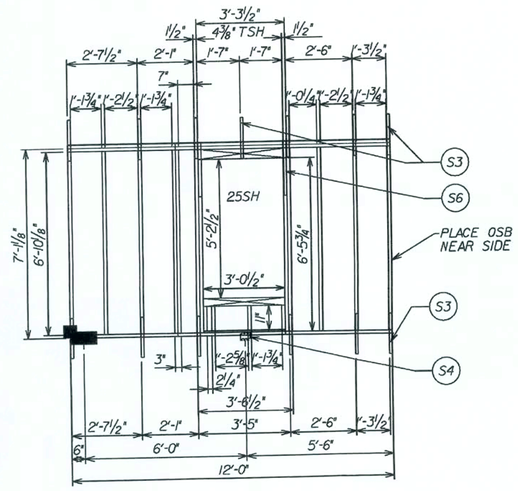

PANEL E201

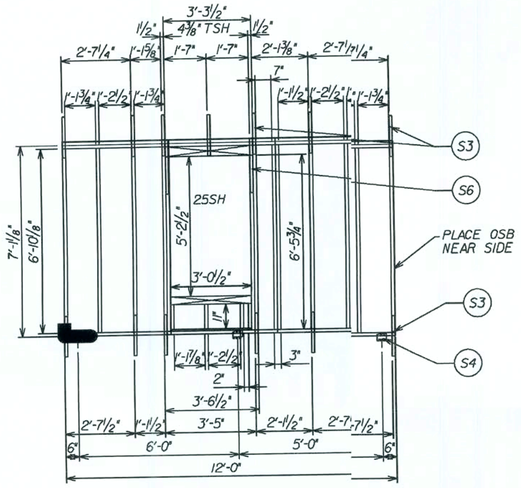

PANEL E202

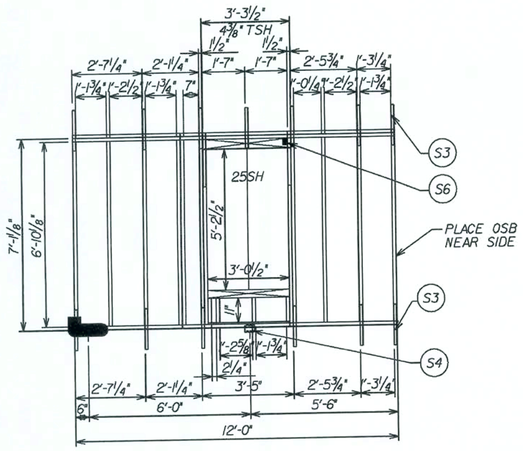

PANEL E203

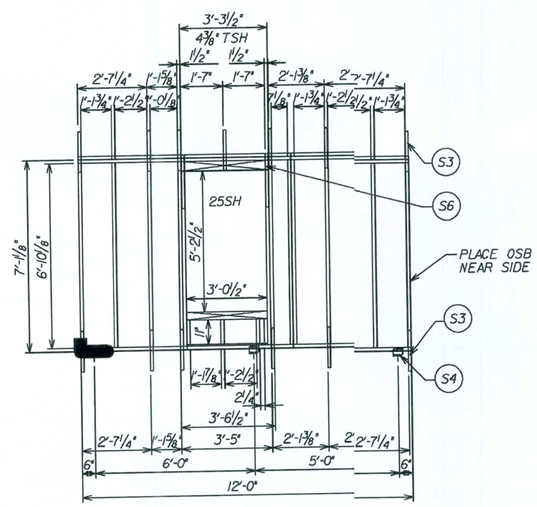

PANEL E204

REVISIONS :

12-06-06 ADDED FRAMING DETAILS.swe

Maronda Homes

(407) 321-0064 4005 MARONDA WAY SANFORD, FLORIDA

g:\mlco\houses\f\nantucket\border\light\nantucket.wp2

AMERICANA | WALL PANEL LAYOUT

NANTUCKET

ALL ELEVATIONS

DRAWN BY: E.JONES GARAGE: RIGHT

RELEASE DATE: 2/27/06

Maronda Systems
4005 Maronda Way
Sanford, FL 32771
(407)321-0064

Elmer Bergman, P.E.
License No. 50158

MAY 28 2008

SHEET:

WP2

PLOT DATE: 23 AUG 2007 10:21:25

FLORIDA BUILDING CODE 2004 : RESIDENTIAL

USP HARDWARE - 160%

MARK	PRODUCT CODE #	MAN.	FASTENERS	UPLIFT
N	16d NAILS -(2) TOP CHORD NAILS / (2) BOTTOM CHORD NAILS			
1	HUS 26	USP	(14) 16d HEADER (6) 16d TRUSS	1925
2	HUS 28	USP	(22) 16d HEADER (8) 16d TRUSS	2570
3	JUS 26	USP	(4) 10d HEADER (4) 10d TRUSS	1115
4	MP6F	USP	HEADER/STUD (6) 8d TYPE 1 JOIST/PLATE (6) 8d	605
5	MPAI & MPAIF	USP	HEADER/STUD (6) 8d JOIST/PLATE (6) 8d	660
6	SKH 26 L/R	USP	HEADER (6) 16d JACK (6) 10d X 1½"	1085
7	SKHH26 L/R	USP	HEADER (18) 16d JACK (12) 10d X 1½"	2190
8	SUH 26	USP	HEADER (6) 10d JACK (4) 10d X 1½"	725
9	SUH 28	USP	HEADER (8) 10d JACK (6) 10d X 1½"	800
10	THD26	USP	HEADER (18) 16d TRUSS (12) 10d X 1½"	2170
11	THD28	USP	HEADER (28) 16d TRUSS (16) 10d X 1½"	2330
12	THD28-2	USP	HEADER (28) 16d TRUSS (16) 10d X 1½"	2485
13	THDH28-3	USP	HEADER (36) 16d TRUSS (16) 10d X 1½"	2665
14	THD48	USP	HEADER (28) 16d TRUSS (16) 10d X 1½"	2485
15	THJ 26	CLEVELAND	HIP(7)10d-HEADER(16)16d JACK (5) 10d x1½"	1010
16	(2) MTW 12	USP	(14) 10d (14) 10d x 1-1/2	2060
17	(2) MUGT15	USP	THREADED ROD (1) 5/8 GIRDER (22) 10d X 1½"	8330
18	(2) RT16-2	USP	TOP PLATES (8) 8d TRUSS (8) 8d X 1½"	2320
19	(2) MSTA24	USP	(18) 10d (18) 10d	3280
20	(2) RT16	USP	TOP PLATES (8) 8d TRUSS (8) 8d X 1½"	2060
21	C44	USP	POST (6) 16d BEAM (6) 10d X 1½"	1000
22	FA3	USP	TOP (4) 10d X 1½" SIDE (2) 10d X 1½"	1155
23	HC520 CLIP	USP	PLATES (11) 8d STUD (6) 8d	445
24	HHCP2 CRNR CLIP	USP	TRUSS (10) 10d X 1½" PLATE (10) 10d X 1½"	800
25	HTA 20 ANCHOR	USP	(14) 10d X 1½"	1615
26	HTA 20(2) ANCHOR	USP	(13) 10d X 1½"	3230
27	HTW24	USP	(20) 10d	1325
28	HUGT2	USP	CONC.- ANC.BOLT (2)3/4"-(2)1¾"WASH 3¼" EMBED. -ALL GRDR.-(8) 10d	9790
29	HUGT3	USP	CONC.- ANC.BOLT (2)3/4"-(2)1¾"WASH 3¼" EMBED. -ALL GRDR.-(8) 10d	9860
30	KST227 STRP ANC.	USP	(34) 16d	4750
31	LFTA	USP	FACE OF GABLE w/ 2x4 (11) 10d x 1½"	1250
32	LSTA36	USP	(22) 10d X 1½"	1640
33	LTW12	USP	(12) 10d	670
34	LTS20 STRAP ANC	USP	ANCHOR-1/2" WEDGE BOLT 3¼" EMBED. (10) 10d X 1½"STRAP	1890
35	LBP12 BEARING PLT	USP	½" J-BOLT	2515
36	LFTA6	USP	PLATE (8) 8d STUD (8) 8d	1035
37	MSTA12	USP	(10) 10d	1015
38	MSTA18	USP	(14) 10d	1420
39	MSTA24	USP	(18) 10d	1640
40	MSTA30	USP	(22) 10d	2065
41	MTW12	USP	(14) 10d	1030
42	MTW18	USP	(14) 10d	1030
43	MTS27B STRP ANC	USP	(24) 16d (1)3¼" ANCHOR BOLT 3¼" EMBEDDED	4635
44	MUGT15	USP	(22) 10d (1)1⅝" ANCHOR BOLT 3¾" EMBEDDED	4165
45	NP37 3/8 X 7	USP	HEADER (6) 16d TOP OF BOT. SEC.(6) 10d X 1½"	
46	PA 28	USP	(15) 16d	3360
47	RT16	USP	TOP PLATES (8) 8d TRUSS (8) 8d X 1½"	1030
48	RT16A	USP	TRUSS (9) 10d x 1½" PLATE (8) 10d	1380
49	RT16-2	USP	TOP PLATES (8) 8d TRUSS (8) 8d X 1½"	1160
50	RT5 CLIPS L/R	USP	TRUSS (4) 8d PLATE (4) 8d	540
51	RT3 CLIPS L/R	USP	(4) 8d TOP (4) 8d BOTTOM	530
52	TA 12	USP	(5) 10d x 1½"	790
53	TA 14	USP	(7) 10d x 1½"	1110
54	TA 18	USP	(8) 10d x 1½"	1205
55	(2)TA 18	USP	(8) 10d x 1½" 1-PLY (8) 10d x 1½" 2-PLY	2410 2410
56	TA 24	USP	(8) 10d x 1½"	1205
57	(2)TA 24	USP	(8) 10d x 1½" 1-PLY (8) 10d x 1½" 2-PLY	2410 2410
58	USC63	USP	TRUSS (8) 10d (4)¾" EXP. BOLTS #6170 2¾" EMBEDDED	11150
59	USC3F	USP	TRUSS (8) 10d (4)¾" EXP. BOLTS #6170 2¾" EMBEDDED	11150
60	USC73	USP	TRUSS (8) 16d (4)¾" EXP. BOLTS #6170 2¾" EMBEDDED	11150
61	UGTS63	USP	TRUSS (8) 16d (2)¾" ANC. BOLTS 2¾"" EMBEDDED	6170
62	(2) HTW24	USP	(20) 10d (20) 10d	2650

TRUSS HARDWARE SCHEDULE

TRUSS ID	TRUSS TYPE	QUAN.	UPLIFT LEFT	UPLIFT MID	UPLIFT RIGHT	STRAP LEFT	STRAP MID	STRAP RIGHT
FGRDI	2-PLY FLAT GIRDER	2 (2)	5076		5060	17		17
GI	GABLE	1	164		164	31		31
GRDI	2-PLY GABLE GIRDER	1(2)	535	936	237	54	54	54
HS	HIP SCISSOR	2	184		203	47		47
HSI	HIP SCISSOR	2	220		171	47		47
HS2	HIP SCISSOR	2	194		194	47		47
HSGRDI	2-PLY HIP GIRDER	2 (2)	1008		1069	49		49
JS	END JACK	18	138	27	114	50	50	3
JSI	CORNER JACK	4	16		111	50		3
JS2	CORNER JACK	4	3		40	50		3
JS3	CORNER JACK	4	133		85	50		3
JS4	CORNER JACK	4	147		7	50		3
JSGRDI	HIP JACK	4	199		104	24		15
MI	MONO	19	110		249	54		3
MIA	MONO	4	25		254	54		3
MIB	MONO	6	104		371	3		3
MIG	MONO GABLE	3	135		135	31		31
MIGA	MONO GABLE	1	151		151	31		31
SI	SCISSOR	8	190		190	50		50
TI	COMMON	2	307	977	219	54	54	54
TIG	COMMON GABLE	1	313	273	133	54	54	54
VI-V5	VALLEY TRUSS	33						

GENERAL TRUSS NOTES:

1. INFORMATION BASED ON 5 mph WINDLOAD. ALL PRESSURES WERE CALCULATED USING MWFRS/C-C HYBRID WINASCE 7-02
2. ROOF TRUSS LOADING:
   - 16 psf TOP CHORD LL
   - 7 psf TOP CHORD DL
   - 10 psf BOTTOM CHORD LL
   - 10 psf BOTTOM CHORD DL
   - 43 psf TOTAL LOAD
3. PROVIDE TRUSS BRACING PER TRUSS ENGINEERING & BCSI-03

REVISED 1/18/08

X DENOTES A GRTY LOAD OF 5000 LBS (HIGHER

ALL HARDWARE MANUFACTURED USP XXXX [1]
ALL HARDWARE MANUFACTURED SIMPSON XXXX
ALL HARDWARE MANUFACTURED CLEVELAND XXXX [2]

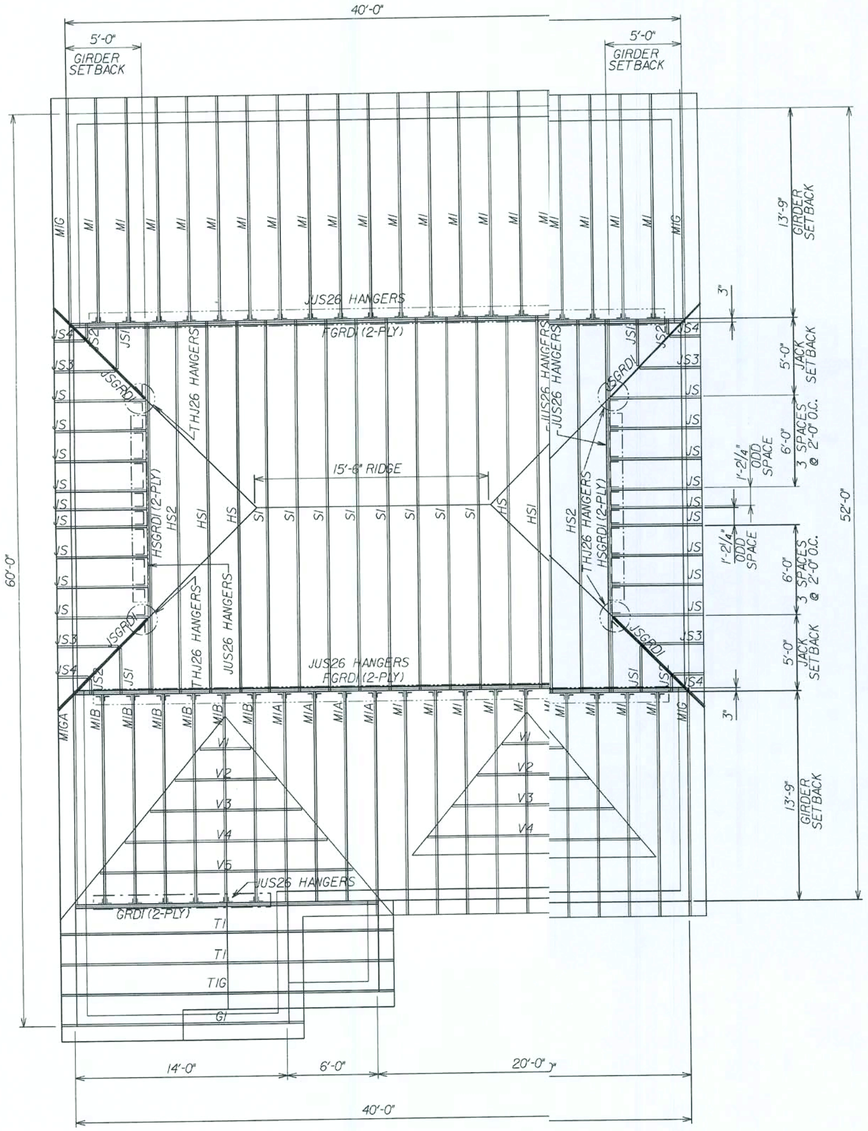

REVISIONS :

12-07-06 REV. CODE INFORMATION

Maronda Homes
(407) 321-0064 4005 MARONDA WAY SANFORD, FLORIDA

FLORIDA STRUCTURE WAS DESIGNED IN ACCORDANCE AND MEETS THE REQUIREMENTS OF SECTION R301 OF THE FLORIDA BUILDING CODE RESIDENTIAL AND ASCE 7-2005 SUPPLEMENT FOR 125 MPH 3 SEC. GUST, HIS EXPOSURE B ENCLOSED BUILDING. ALL WINDOWS AND DOORS ARE RATED TO WITHSTAND ALL APPLICABLE LOADS.

p:\houses.05\contucket\25\ntlak_1r1\non-h125-1r1

TRUSS INFO PACKET

HERITAGE

NANTUCKET

ELEVATION "M"

GARAGE: RIGHT

125 MPH

DRAWN BY: EJ

RELEASE DATE: 04-22-05

1409.57

Maronda Systems
4005 Maronda Way
Sanford, FL 32771
(407)321-0064

Elmer Bergman, P.E.
License No. 50158

MAY 28 2008

SHEET:
TRIM

PLOT DATE: 27 FEB 2008

FLORIDA BUILDING CODE 2004 : RESIDENTIAL

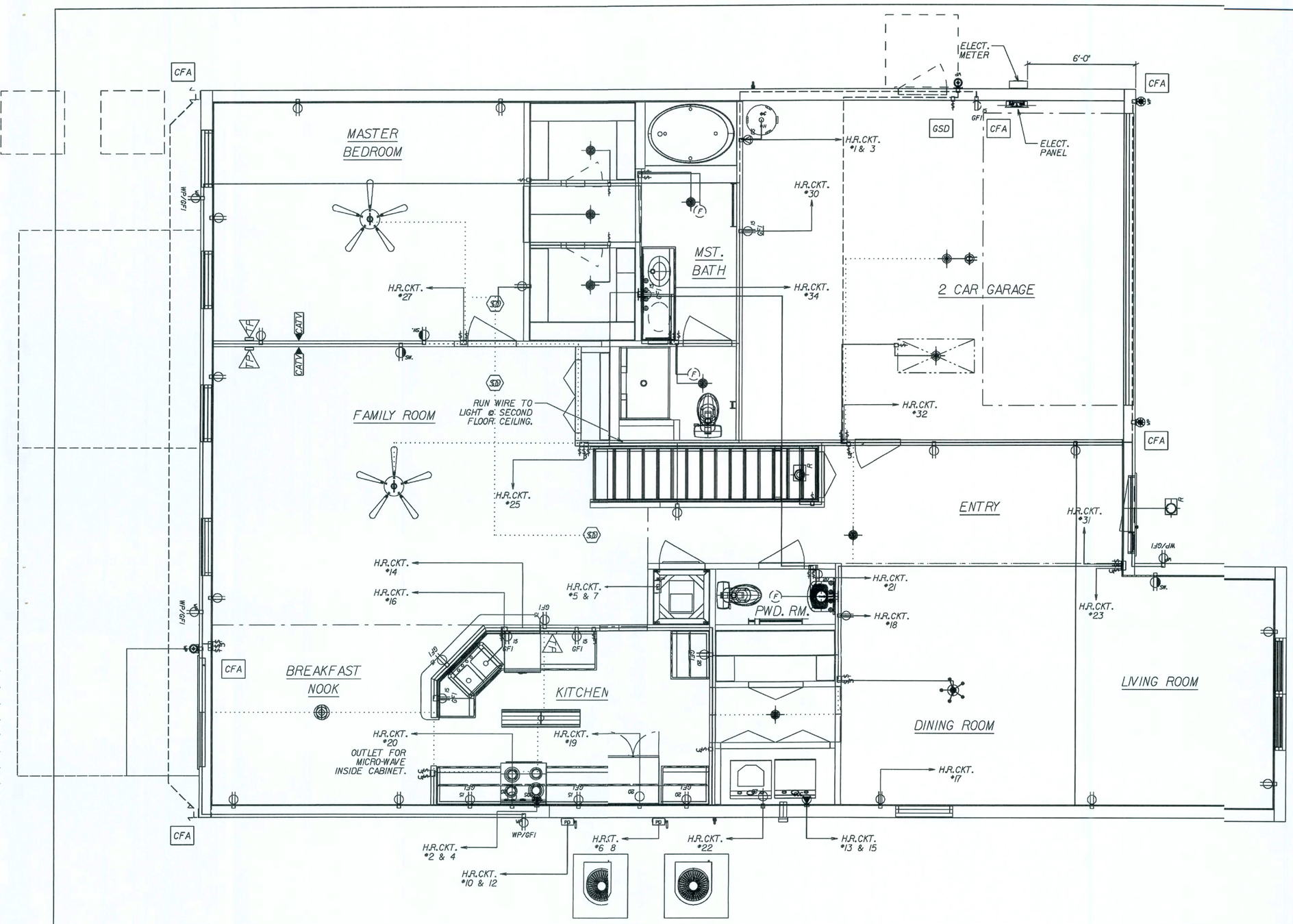

GENERAL ELECTRICAL NOTES:

CIRCUITRY IS DIAGRAMATIC ONLY, FIELD CONDITIONS MAY CHANGE ACTUAL INSTALLATION.

PROVIDE AFCIs (arc-fault circuit interrupters) IN ALL DWELLING UNIT BEDROOMS PER NEC, SECTION 210J2

SMOKE DETECTORS ARE INSTALLED PER MFG. INSTRUCTIONS AND NFPA 72, ALL DEVICES SHALL BE INTERCONNECTED WITH BATTERY BACK-UP.

FOR INSTALLATION OF GROUND ROD, SEE TYP. CONC. ENCASED ELECTRODE DETAIL SHEET* FTG

REVISED 10-05-06

LIST OF OPTIONS:

CFA	OPTIONAL COACH LIGHTS, (2) FLOOD LIGHTS AT REAR AND GARAGE OUTLET REVISED 11-18-05
GSD	OPTIONAL DOOR LIGHT REVISED 11-18-05

ELECTRICAL SYMBOL LEGEND:

REGULAR TEXT	REVERSE TEXT	DESCRIPTION
PD	PD	Power Disconnect Switch
		Door Bell Chime
		Door Bell Buzzer
		Ceiling Fan (By Others)
SD	SD	Smoke Detector
		Light Fixture Bath
		Exterior WP Lamp
		Single Pole Switch
		Three Way Switch
		Single Receptacle
		Duplex Receptacle
GFI	GFI	GFI Receptacle
SW.	SW.	Switched Receptacle
		220 V. Special Receptacle
		Ceiling Ltg Fixture
R	R	Recessed Ltg. Fixture
F	F	Exhaust Fan
CATV	CATV	Cable TV
TP	TP	Telephone Outlet
		Flood Lights
F		Exhaust Fan / Light Combo

REVISED 03-19-07

REVISIONS :
02-19-07 ADD SMOKE DETECTOR TO MASTER BEDROOM
02-21-07 REVISIONS PER PROTOTYPE.
04-25-07 REVISIONS PER PROTOTYPE.
10-29-07 REV. MSTR. BATH. WALL @ O/S TUB

Maronda Homes
(407) 321-0064 4005 MARONDA WAY SANFORD, FLORIDA

FLORIDA: THIS STRUCTURE WAS DESIGNED IN ACCORDANCE AND MEETS THE REQUIREMENTS OF THE FLORIDA BUILDING CODE 2004 : RESIDENTIAL AND 2005, 2006 SUPPLEMENT

AMERICANA | 1st Flr. ELECTRICAL

NANTUCKET

4 BEDROOM W/LOFT

GARAGE: RIGHT

DRAWN BY:

RELEASE DATE: 08-24-06

p:\fl\houses_05\nantucket\electrical\nanell

15JAN03

PLOT DATE: 16 JAN 2008

SHEET: E1

elecitem REPORT

Fri Aug 25 11:15:24 2006
p:*fl*houses 05*nantucket*electrical*ele.ele

QUANTITY			DESCRIPTION
43	118LB	160010.0031	1 Gang BOX W/BRACKET
3	1275E	160025.0003	SMOKE DETECTOR
1	1594	160015.0017	15A G.F.I. CONTROL RECEPTACLE
3	2094	160015.0021	20A G.F.I. CONTROL RECEPTACLE
7	234LB	160010.0021	2 Gang BOX W/BRACKET
2	276-WH6	160025.0085	KEYLESS LIGHT FIXTURE
8	3232	160015.0015	15A DUPLEX CIRCUIT RECEPTACLE
4	3232	160015.0015	15A DUPLEX RECEPTACLE W/WP COVER
18	3232	160015.0015	15A DUPLEX RECEPTACLE
3	3232	160015.0015	SWITCHED RECEPTACLE
4	345LB	160010.0032	3 Gang BOX W/BRACKET
1	3854	160015.0024	SURFACE RANGE RECEPTACLE
1	3884	160015.0023	SURFACE DRYER RECEPTACLE
3	5351	160015.0011	20A Single Receptacle
23	660-WG	160015.0001	15A 120V SINGLE POLE SWITCH
9	663-WG	160015.0002	15A 120V THREE WAY SWITCH
3	690RA	160025.0014	EXHAUST FAN HOUSING
4	7302	160010.0030	1 Gang NAIL ON BOX
1	731	160035.0049	4" ROUND DUPLEX CVR PLATE
19	B620H	160010.0027	Octagon Hanger
2	P2501-10	160025.0449	52" CEILING FAN
2	P3298-30	160025.0258	24" VANITY STRIP LIGHT
7	P3605-30SW	160025.0264	6" GLOBE CLOSE TO CEILING LIGHT FIXTURE
1	P4009-10	160025.0441	5-BULB DINING ROOM CHANDELIER
1	P4402-29	160025.0267	OPAL GLOBE
1	P5612-30	160025.0268	REAR DOOR LAMP
1	P7279-60	160025.0279	52" SOFT CLOUD FLUORESCENT LIGHT
2	P87-AT	160025.0004	RECESSED LIGHT HOUSING
9	SP1-W	160035.0008	1 GANG SWITCH CVR PLATE
6	SP2-W	160035.0009	2 GANG SWITCH CVR PLATE
2	SP3-W	160035.0010	3 GANG SWITCH CVR PLATE
3	SP7-W	160035.0017	1 GANG SINGLE RECEPTACLE (15/20) CVR PLATE
27	SP8-W	160035.0011	1 GANG DUPLEX CVR PLATE
1	TFN60R	160020.0055	60A SPECIAL DISCONNECT SWITCH
9	THQB1115	160020.0011	15A SINGLE POLE BREAKER
6	THQB1120	160020.0010	20A SINGLE POLE BREAKER
1	THQB2125	160020.0039	25A DOUBLE POLE BREAKER
4	THQB2130	160020.0009	30A DOUBLE POLE BREAKER
1	THQB2135	160020.0043	35A DOUBLE POLE BREAKER
1	THQB2150	160020.0008	50A DOUBLE POLE BREAKER
5	THQL1115AF	160020.0053	15A ARC FAULT BREAKER
1	TM408CO	xxxxxx.xxxx	200 AMP PANEL COVER
1	TML4020CCU	160020.0022	200 AMP LUG PANEL
1	TP18-W	160035.0021	2 GANG SWITCH/DUPLEX CVR PLATE
3	TP26-W	160035.0020	1 GANG GFI (DECORATOR) CVR PLATE
1	TP28-I	160035.0024	3 GANG 2 SWITCH/DUPLEX CVR PLATE
3	TPTE1	160015.0020	TELEPHONE WALL JACK
1	U200	160020.0015	200A Underground Meter Socket
4	WR181-C	160035.0012	1 GANG DUPLEX (VERTICAL) RECEPTACLE WATERPROOF CVR W/LID
3		160025.0143	POWER DISCONNECT SWITCH
2		xxxxxx.xxxx	Cable TV

Elecinth REPORT

Fri Aug 25 11:15:24 2006
p:*fl*houses 05*nantucket*electrical*ele.ele

QUANTITY	DESCRIPTION		
51'	10-2W/G-NM	160005.0009	10 Gauge/2 Cond. Copper
132'	10-3W/G-NM	160005.0008	10 Gauge/3 Cond. Copper
703'	12-2W/G-NM	160005.0007	12 Gauge/2 Cond. Copper
1698'	14-2W/G-NM	160005.0003	14 Gauge/2 Cond. Copper
337'	14-3W/G-NM	160005.0005	14 Gauge/3 Cond. Copper
87'	6-3W/G-NM	160005.0046	6 Gauge/3 Cond. Copper
150'	8-2W/G-NM	160005.0041	8 Gauge/2 Cond. Copper

FLORIDA BUILDING CODE 2004 : RESIDENTIAL

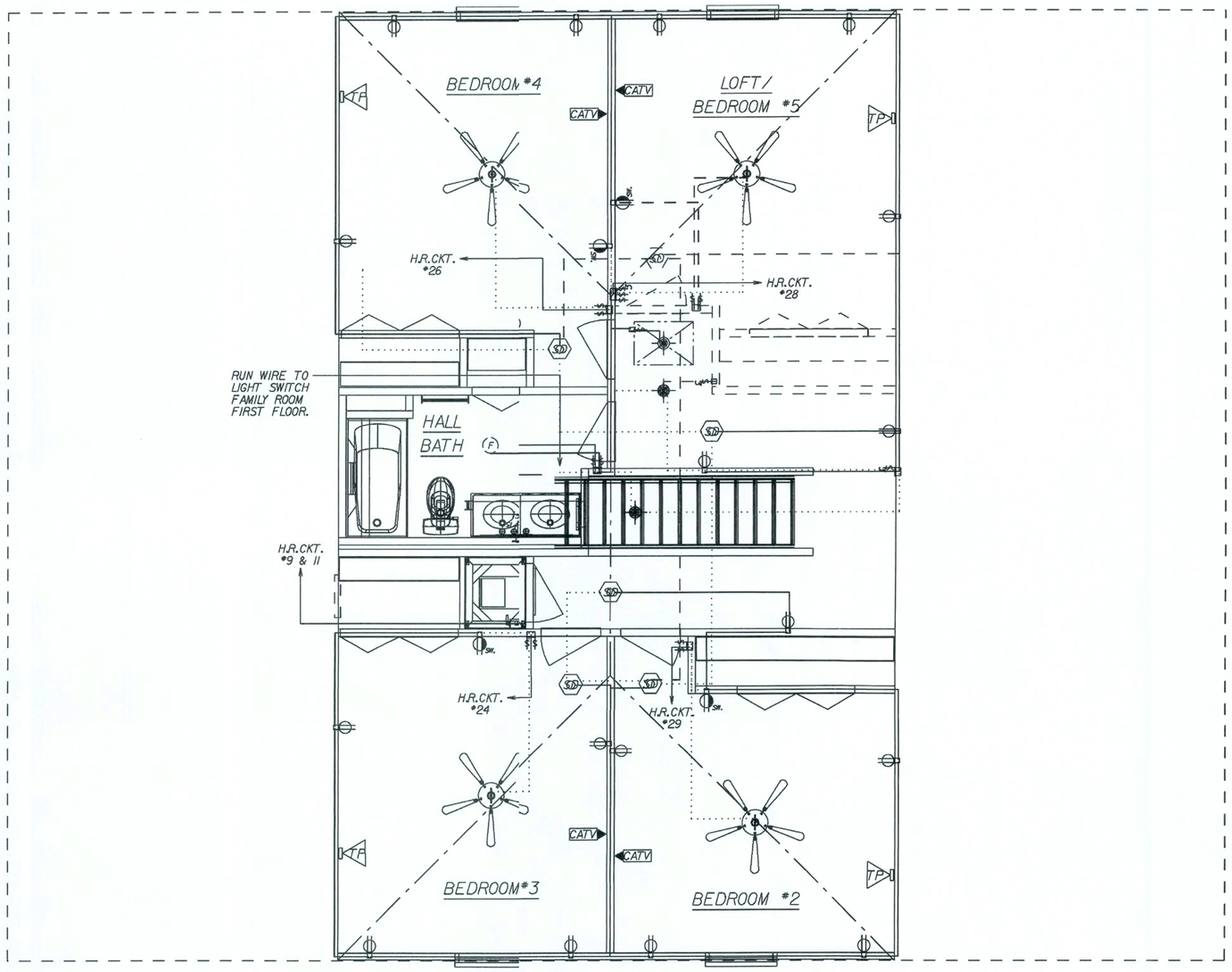

GENERAL ELECTRICAL NOTES:

CIRCUITRY IS DIAGRAMATIC ONLY, FIELD CONDITIONS MAY CHANGE ACTUAL INSTALLATION.

PROVIDE AFCIs (arc-fault circuit interrupters) IN ALL DWELLING UNIT BEDROOMS PER NEC, SECTION 210J2

SMOKE DETECTORS ARE INSTALLED PER MFG. INSTRUCTIONS AND NFPA 72, ALL DEVICES SHALL BE INTERCONNECTED WITH BATTERY BACK-UP.

FOR INSTALLATION OF GROUND ROD, SEE TYP. CONC. ENCASED ELECTRODE DETAIL SHEET* FTG

REVISED 10-05-06

LIST OF OPTIONS:

CFA	OPTIONAL COACH LIGHTS, (2) FLOOD LIGHTS AT REAR AND GARAGE OUTLET REVISED 11-18-05
GSD	OPTIONAL DOOR LIGHT REVISED 11-18-05

ELECTRICAL SYMBOL LEGEND:

REGULAR TEXT	REVERSE TEXT	DESCRIPTION
PD	PD	Power Disconnect Switch
		Door Bell Chime
BB	BB	Door Bell Buzzer
		Ceiling Fan (By Others)
SD	02	Smoke Detector
		Light Fixture Bath
		Exterior WP Lamp
		Single Pole Switch
		Three Way Switch
		Single Receptacle
		Duplex Receptacle
GFI	GFI	GFI Receptacle
SW.	SW.	Switched Receptacle
		220 V. Special Receptacle
		Ceiling Ltg Fixture
R	R	Recessed Ltg. Fixture
F	F	Exhaust Fan
CATV	NTAC	Cable TV
TP	TP	Telephone Outlet
		Flood Lights
EL	EL	Exhaust Fan / Light Combo

REVISED 03-19-07

REVISIONS :
03-05-07 REVISIONS PER PROTOTYPE.

Maronda Homes
4005 MARONDA WAY SANFORD, FLORIDA
(407) 321-0064

FLORIDA:
THIS STRUCTURE WAS DESIGNED IN ACCORDANCE AND MEETS THE REQUIREMENTS OF THE FLORIDA BUILDING CODE RESIDENTIAL 2004 SUPPLEMENT

AMERICANA | 2nd Flr. ELECTRICAL

NANTUCKET

4 BEDROOM W/LOFT

GARAGE: RIGHT

DRAWN BY:

RELEASE DATE: 08-24-06

p:\houses_05\nantucket\electrical\ele.el2

15x10x04

PLOT DATE: 16 JAN 2008

SHEET: EL2

FLORIDA BUILDING CODE 2004 : RESIDENTIAL

elecitem REPORT

Mon Mar 05 14:02:26 2007
p:*fl*houses 05*nantucket*electrical*ele.el2

QUANTITY	DESCRIPTION		
5	1275E	160025.0003	SMOKE DETECTOR
1	276-WH6	160025.0085	KEYLESS LIGHT FIXTURE
1	3232	160015.0015	15A DUPLEX CIRCUIT RECEPTACLE
18	3232	160015.0015	15A DUPLEX RECEPTACLE
4	3232	160015.0015	SWITCHED RECEPTACLE
11	660-WG	160015.0001	15A 120V SINGLE POLE SWITCH
2	663-WG	160015.0002	15A 120V THREE WAY SWITCH
1	690RA	160025.0014	EXHAUST FAN HOUSING
24	7302	160010.0030	1 Gang NAIL ON BOX
5	7835	160010.0050	2 Gang NAIL ON BOX
1	7846	160010.0004	3 Gang NAIL ON BOX
8	B620H	160010.0027	Octagon Hanger
4	P2501-10	160025.0449	52" CEILING FAN
1	P3298-30	160025.0258	24" VANITY STRIP LIGHT
2	P3605-30SW	160025.0264	6" GLOBE CLOSE TO CEILING LIG' FIXTURE
1	SP1-W	160035.0008	1 GANG SWITCH CVR PLATE
5	SP2-W	160035.0009	2 GANG SWITCH CVR PLATE
1	SP3-W	160035.0010	3 GANG SWITCH CVR PLATE
23	SP8-W	160035.0011	1 GANG DUPLEX CVR PLATE
4	TPTE1	160015.0020	TELEPHONE WALL JACK
1		160025.0143	POWER DISCONNECT SWITCH
4		xxxxxx.xxxx	Cable TV

Elecinth REPORT

Mon Mar 05 14:02:26 2007
p:*fl*houses 05*nantucket*electrical*ele.el2

QUANTITY	DESCRIPTION		
65'	10-3W/G-NM	160005.0008	10 Gauge/3 Cond. Copper
11'	12-2W/G-NM	160005.0007	12 Gauge/2 Cond. Copper
862'	14-2W/G-NM	160005.0003	14 Gauge/2 Cond. Copper
266'	14-3W/G-NM	160005.0005	14 Gauge/3 Cond. Copper

ELECTRICAL LOAD CALCULATIONS

11/28/06

MODEL: NANTUCKET 4 w/ LOFT

		VOLT/AMPS
LARGEST LOAD:HEAT PUMPW/SUPPLEMENTAL HEAT		**23800**
SQUARE FEET LIVING AREA	**2616** @ 3 VOLT/AMPS	7848
SMALL APPLIANCE CIRCUITS		3000
LAUNDRY CIRCUIT		1500
OVEN		11700
WATER HEATER		4500
DISHWASHER		1500
DRYER		5000
DISPOSAL		500
TOTAL LOAD		**35548**

FIRST 10KVA @100%	10000
REMAINDER @40%	10219.2
LARGEST LOAD	23800

TOTAL LOAD **44019** V.A./240 VOLTS= **183** AMPS

SERVICE SIZE: 200 AMPS

NOTE: HEAT PUMPS ARE CALCULATED AT 100% WITH SUPPLIMENTAL HEAT AT 100%

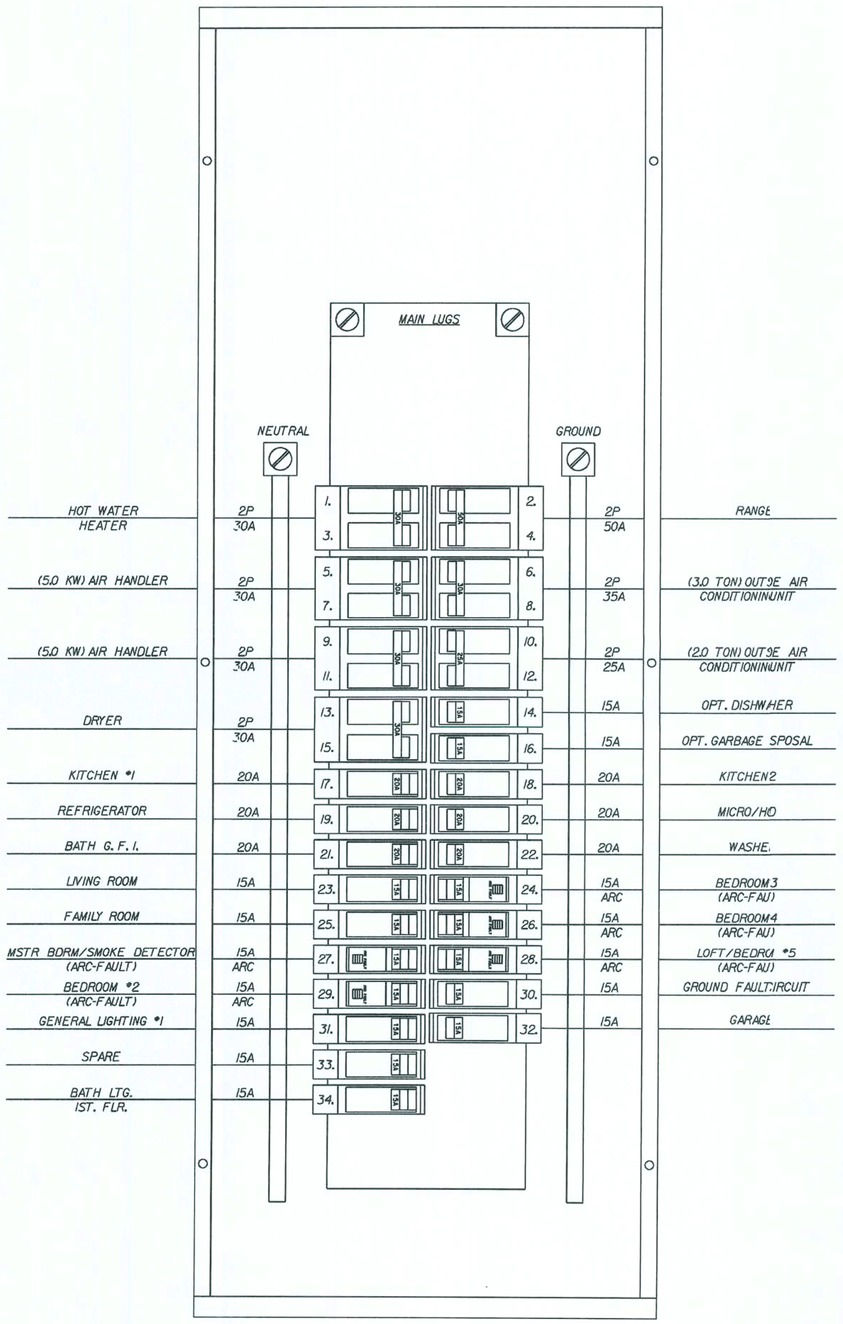

MAIN LOG LOAD CENTER

NOTE:
IF LOCAL CODE REQUESTS A LOCK-DOG DEVICE ON BREAKERS FOR APPLIANCES, FIELD WILL SUPPLY TO COMPLY

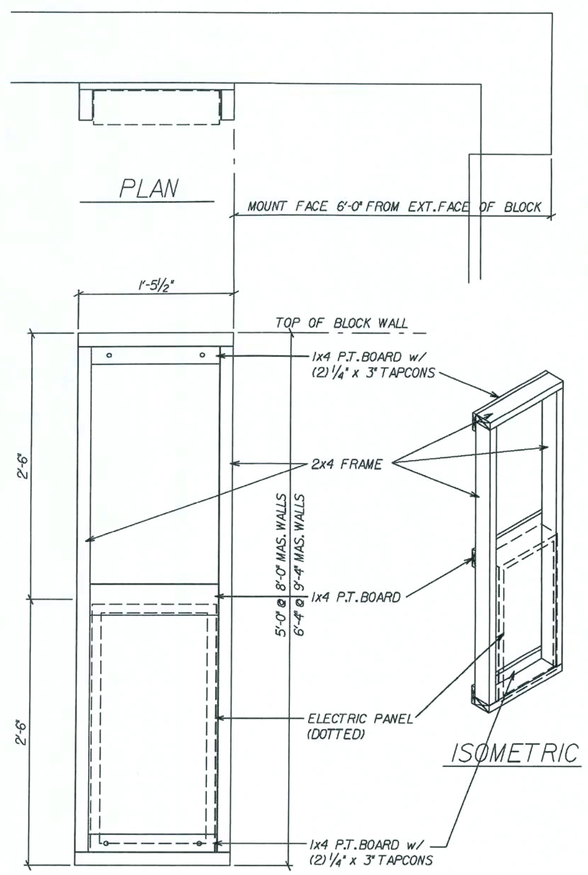

ELECTRIC PANEL FRAME

REVISED 09-07-07
ADDED HGT. @ 9'-4" MAS. WALL

SCALE: 1" = 1'-0"

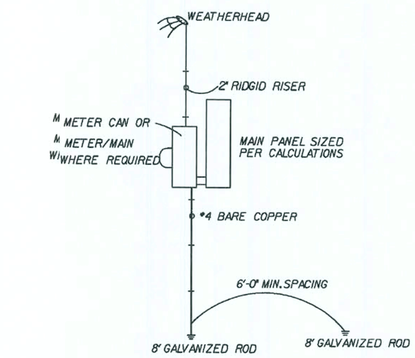

OVERHEAD SERV.

REVISED 06-06-06
SPACING REQUIREMENT

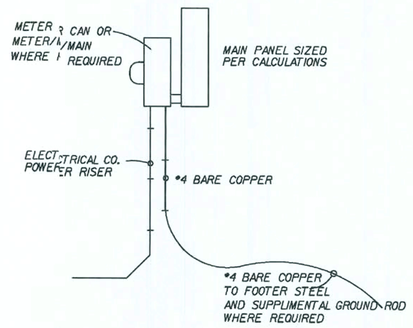

UNDER GROUND SERV.

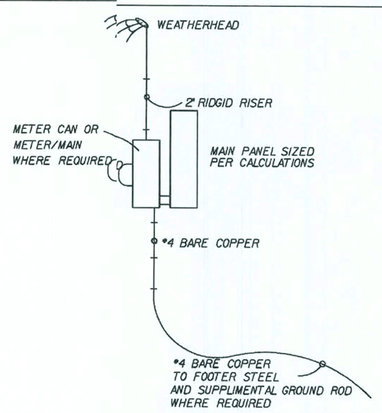

OVERHEAD SERV.

REVISED 06-06-06
SPACING REQUIREMENT

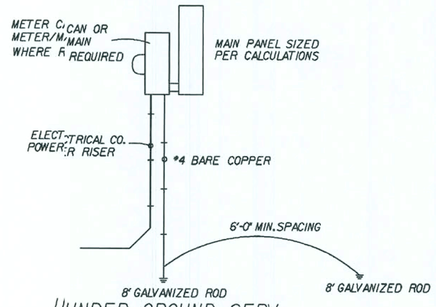

UNDER GROUND SERV.

* GROUNDING ELECTRODE SYSTEM TO BE INSTALLED PER ARTICLE 250 NAT. ELECT. CODE *

REVISIONS :
11-28-06 REV. ELECT. LOAD CALC.
02-19-07 ADD SMOKE DETECTOR TO MASTER BEDROOM

Maronda Homes
(407) 321-0064 4005 MARONDA WAY SANFORD, FLORIDA

FLORIDA: THIS STRUCTURE WAS DESIGNED IN ACCORDANCE WITH THE REQUIREMENTS OF THE FLORIDA BUILDING CODE 2004 : RESIDENTIAL AND 2006 SUPPLEMENT

AMERICANA | ELECTRICAL DETAIL

NANTUCKET

4 BEDROOM W/LOFT

GARAGE:

DRAWN BY:

RELEASE DATE: 08-24-06

15.01.04

SHEET: ELA

PLOT DATE: 16 JAN 2008

p:\houses_05\nantucket\electrical\panela

FLORIDA BUILDING CODE 2004 : RESIDENTIAL

* USE WITH 13 SEER EQUIP. *

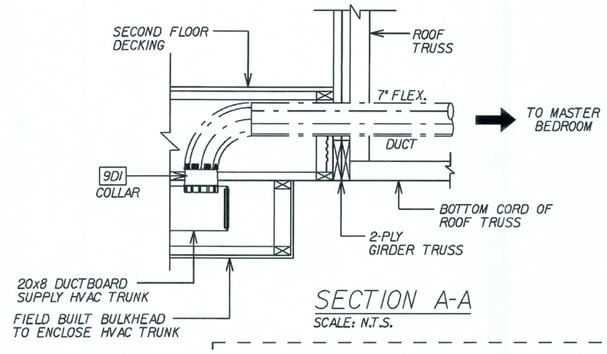

SECTION A-A
SCALE: N.T.S.

GENERAL MECHANICAL NOTES:

ALL TAPES, CONNECTORS AND MASTIC USED WILL BE UL-181 APPROVED.

SEE ELECTRIC PLANS FOR EXHAUST FAN LOCATIONS IN BATH AREAS.

SEE FLOOR PLAN FOR CLOTHES DRYER VENT LOCATION.

M1602.4 BALANCED RETURN AIR:
TRANSFER GRILLES & HABITABLE ROOMS SEE DETAIL BELOW:

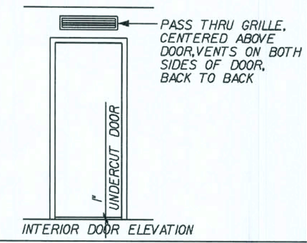

INTERIOR DOOR ELEVATION

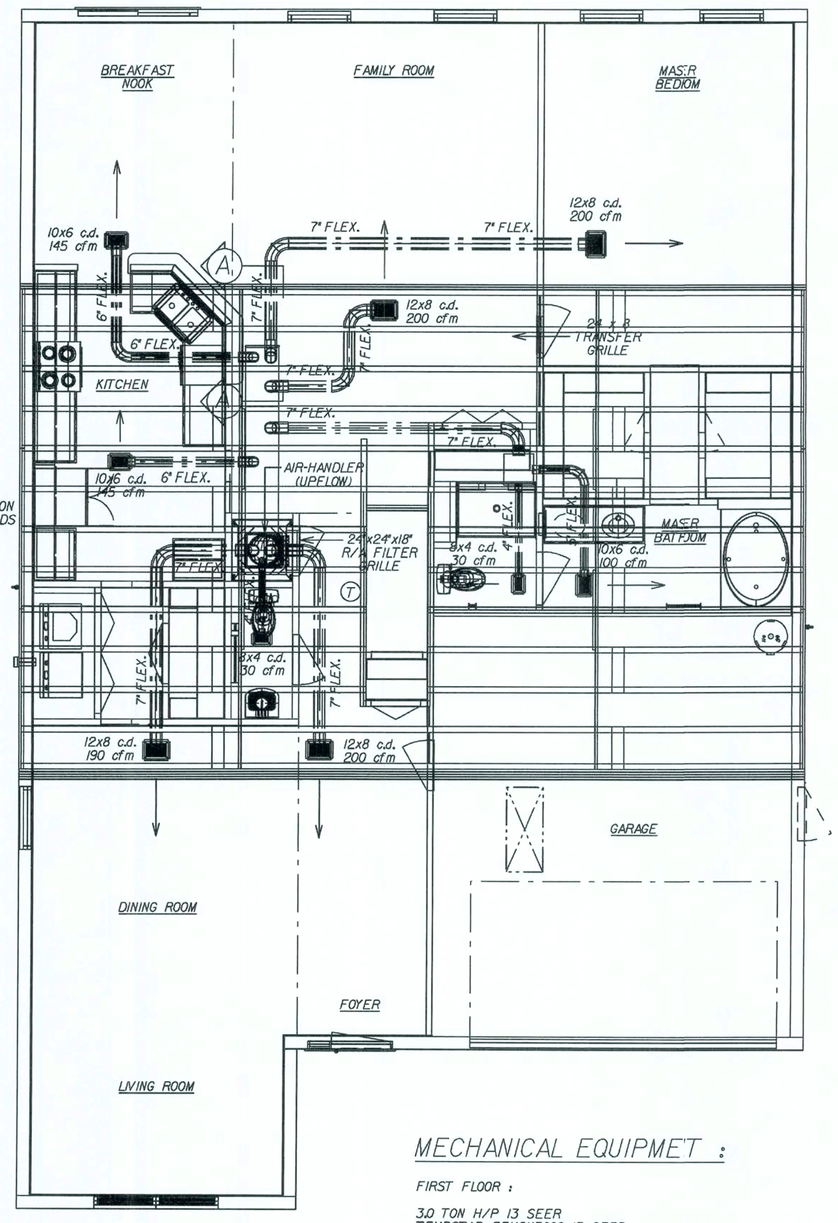

APPROXIMITE LOCATION OF A/C UNITS & PADS

FIRST FLOOR REGISTER LAYOUT
SCALE: 3/16"1'-0"

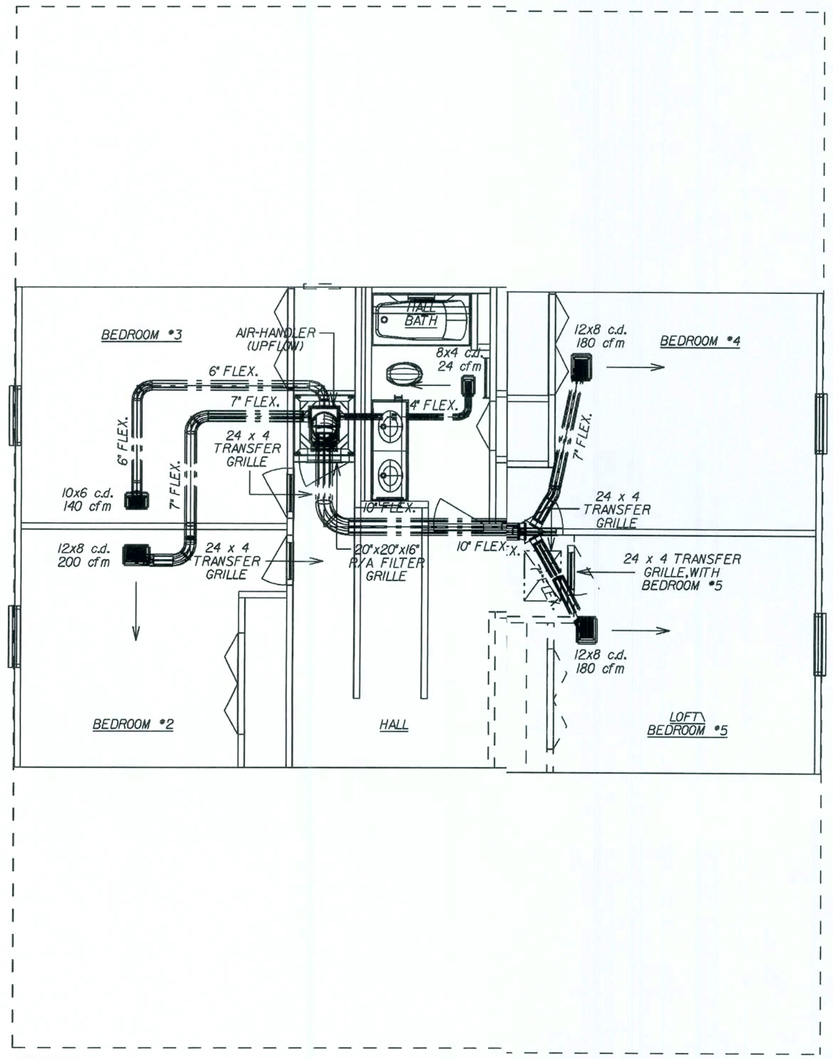

SECOND FLOOR REGISTER LAYOUT
SCALE: 3/16"1'-0"

MECHANICAL EQUIPMET :

FIRST FLOOR :

3.0 TON H/P 13 SEER
TEMPSTAR FEM2X3600 13 SEER
TEMPSTAR N2H336AKA 13 SEER
5.0 KW
BRAEBURN 5200 2 STAGE HEAT PUMP PGRAMABLE
BROAN 671-70 CFM
EXT STATIC .60 - 1240 CFM HIGH

ALL TAPES, CONNECTORS AND MASTIC USED WILL BE UL-181 APPROVED

SECOND FLOOR :

2.0 TON H/P 13 SEER
TEMPSTAR FSM2X2400 13 SEER
TEMPSTAR N2H324AKA 13 SEER
5.0 KW
BRAEBURN 5200 2 STAGE HEAT PUMP PROGRAMABLE
BROAN 671-70 CFM
EXT STATIC .60 - 724 CFM HIGH

ALL TAPES, CONNECTORS AND MASTIC USED WILL BE UL-181 APPROVED

REVISIONS :
12/19/06 CHNGD. 2ND FLR CONDENSER TJM
2/23/07 REVISED HVAC AS PER DWGS. TJM
4/25/07 REVISED AS PER BACKGRND TJM

Maronda Homes
(407) 321-0064 4005 MARONDA WAY SANFORD, FLORIDA

FLORIDA:
THIS STRUCTURE WAS DESIGNED IN ACCORDANCE AND MEETS THE REQUIREMENTS OF THE FLORIDA BUILDING CODE 2004 ; RESIDENTIAL AND 2005, 2006 SUPPLEMENT

AMERICANA | REGISTER LAYOUT
NANTUCKET
ELEVATION "M"
DRAWN BY: | GARAGE: RIGHT
RELEASE DATE: 08/22/06 | R.W. PIOTROWSKI

SHEET:
HVA

PLOT DATE: 16 JAN 2008 15:01:42
p:\f:\houses_05\nantucket\hvac\nantb.hva

FLORIDA BUILDING CODE 2004 : RESIDENTIAL

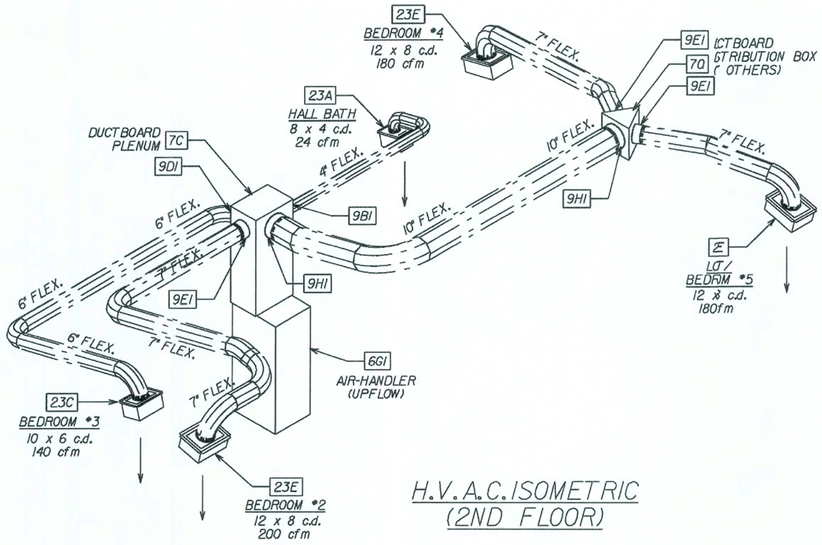

H.V.A.C. ISOMETRIC (2ND FLOOR)

hvacitem REPORT

Fri May 04 14:20:11 2007
p:*fl*houses 05*nantucket*hvac*nanh.htg

QUANTITY	DESCRIPTION		
3	23A	150045.0035	8x4 CEILING BOOT W/4" DIA. COLLAR
1	23B	150045.0036	10x6 CEILING BOOT W/5" DIA. COLLAR
3	23C	150045.0036	10x6 CEILING BOOT W/6" DIA. COLLAR
7	23E	150045.0038	12x8 CEILING BOOT W/7" DIA. COLLAR
1	23X	150045.0044	20x20 R/A TRANSITION BOOT W/16" COLLAR
1	23Z	150045.0046	24x24 R/A TRANSITION BOOT W/18" COLLAR
12'	3F10	150040.0097	10" FOIL FLEX R6
1'	3F16	150040.0108	16" FOIL FLEX R6
1'	3F18	150040.0138	18" FOIL FLEX R6
14'	3F4	150040.0091	4" FOIL FLEX R6
6'	3F5	150040.0092	5" FOIL FLEX R6
28'	3F6	150040.0093	6" FOIL FLEX R6
77'	3F7	150040.0094	7" FOIL FLEX R6
1	6G1	150005.0022	FEM2X2400A 13 SEER 2.0 TON AIR HANDLER UNIT
1	6J1	150005.0043	FEM2X3600A 13 SEER 3.0 TON AIR HANDLER UNIT
1	6N1	150010.0101	N2H324AKA 13 SEER 2.0 TON CONDENSER
1	6P1	150010.0103	N2H336AKA 13 SEER 3.0 TON CONDENSER
2	7C	150005.0110	19x13x30"H BOX PLENUM
1	7Q	150040.0118	DUCT PLENUM TRIANGLE
1	7R	150040.0111	18" SQUARE DUCT PLENUM
4	81A	150055.0041	24x4 TRANSFER GRILLE
4	81B	150045.0052	24x4 TRANSFER GRILLE FRAME
1	81C	150055.0078	24x8 TRANSFER GRILLE
1	81D	150045.0078	24x8 TRANSFER GRILLE FRAME
1	84A	150055.0032	24x24 RETURN AIR FILTER GRILLE
1	84C	150055.0030	20x20 RETURN AIR FILTER GRILLE
3	9B1	150040.0075	4" K-COLLAR/ROTH (4KC/413)
1	9C1	150040.0076	5" K-COLLAR/ROTH (5KC/413)
3	9D1	150040.0077	6" K-COLLAR/ROTH (6KC/413)
9	9E1	150040.0078	7" K-COLLAR/ROTH (7KC/413)
2	9H1	150040.0081	10" K-COLLAR/ROTH (10KC/413)
1	9M1	150040.0137	18" K-COLLAR/ROTH (18KC/413)
1	9N1	150040.0084	16" K-COLLAR/ROTH (16KC/413)

MECHANICAL EQUIPMENT :

FIRST FLOOR :

3.0 TON H/P 13 SEER
TEMPSTAR FEM2X3600 13 SEER
TEMPSTAR N2H336AKA 13 SEER
5.0 KW
BRAEBURN 5200 2 STAGE HEAT PUMP PROGRAMABLE
BROAN 671-70 CFM
EXT STATIC .60 - 1240 CFM HIGH

SECOND FLOOR :

2.0 TON H/P 13 SEER
TEMPSTAR FSM2X2400 13 SEER
TEMPSTAR N2H324AKA 13 SEER
5.0 KW
BRAEBURN 5200 2 STAGE HEAT PUMP PROGRAMABLE
BROAN 671-70 CFM
EXT STATIC .60 - 724 CFM HIGH

ALL TAPES, CONNECTORS AND MASTIC USED WILL BE UL-181 APPROVED

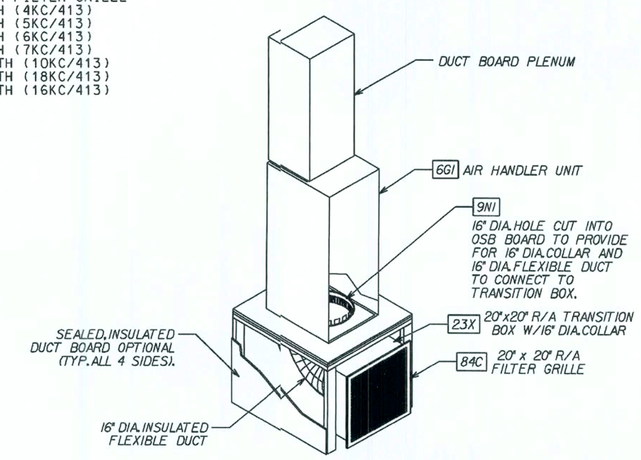

RETURN AIR ISOMETRIC (2ND FLOOR)

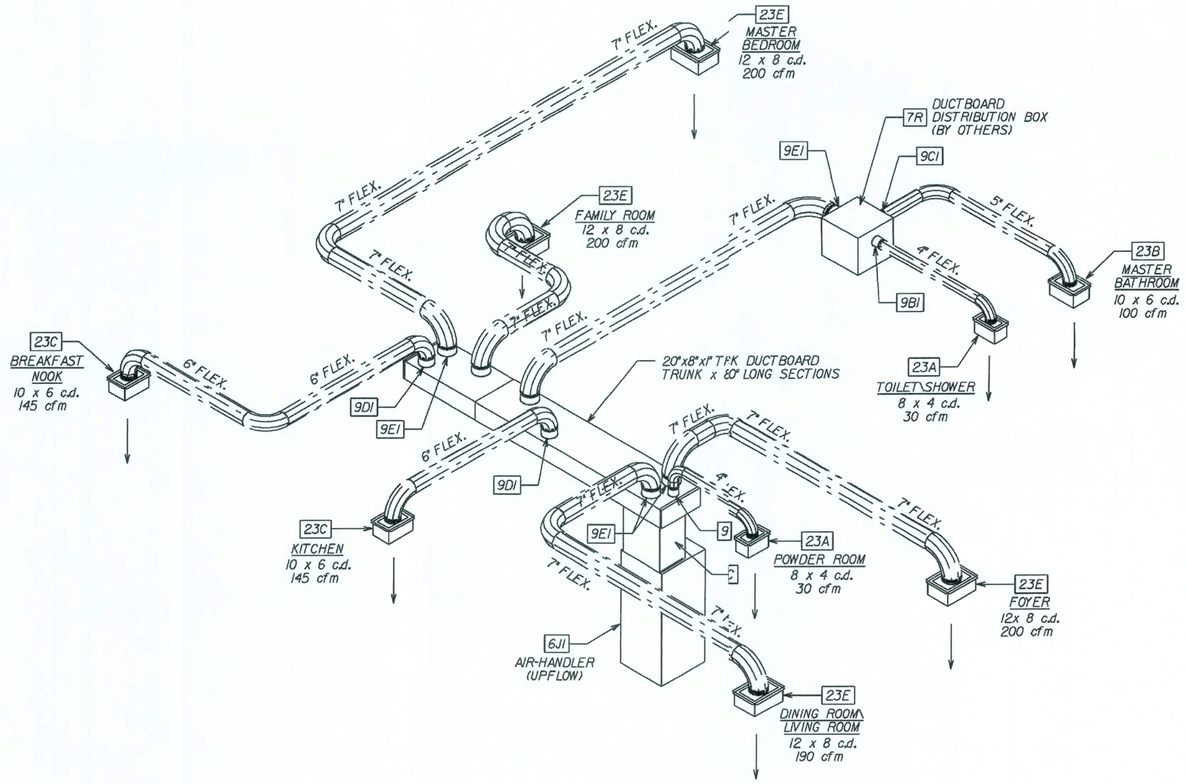

H.V.A.C. ISOMETRIC (1ST FLOOR)

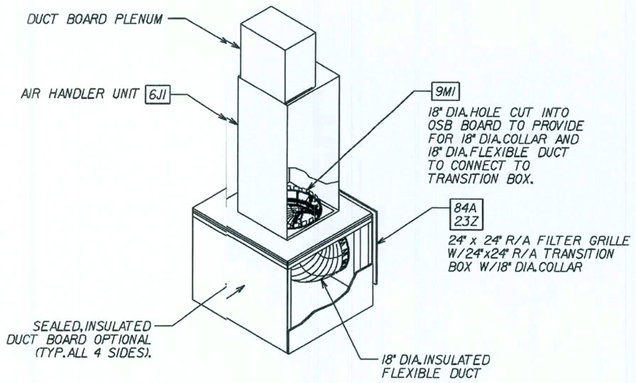

RETURN AIR ISOMETRIC (1ST FLOOR)

* USE WITH 13 SEER EQUIPMENT *

REVISIONS :
12/19/06 CHNGD. 2ND FLR CONDENSER TJM
2/22/07 REVISED HVAC AS PER DWGS. TJM
4/25/07 REVISED AS PER BACKGRND TJM

Maronda Homes
(407) 321-0064 4005 MARONDA WAY SANFORD, FLORIDA

FLORIDA: THIS STRUCTURE WAS DESIGNED IN ACCORDANCE AND MEETS THE REQUIREMENTS OF THE FLORIDA BUILDING CODE 2004 : RESIDENTIAL AND 2006 SUPPLEMENT

AMERICANA HVAC ISOMETRIC
NANTUCKET
ELEVATION "M"
DRAWN BY: GARAGE: RIGHT
RELEASE DATE: 08/22/06 R.W. PIOTROWSKI

p:\fl\houses_05\nantucket\hvac\nanh.iso
15:01:43
PLOT DATE: 16 JAN 2008

SHEET:
ISO-H

FLORIDA BUILDING CODE 2004 : RESIDENTIAL

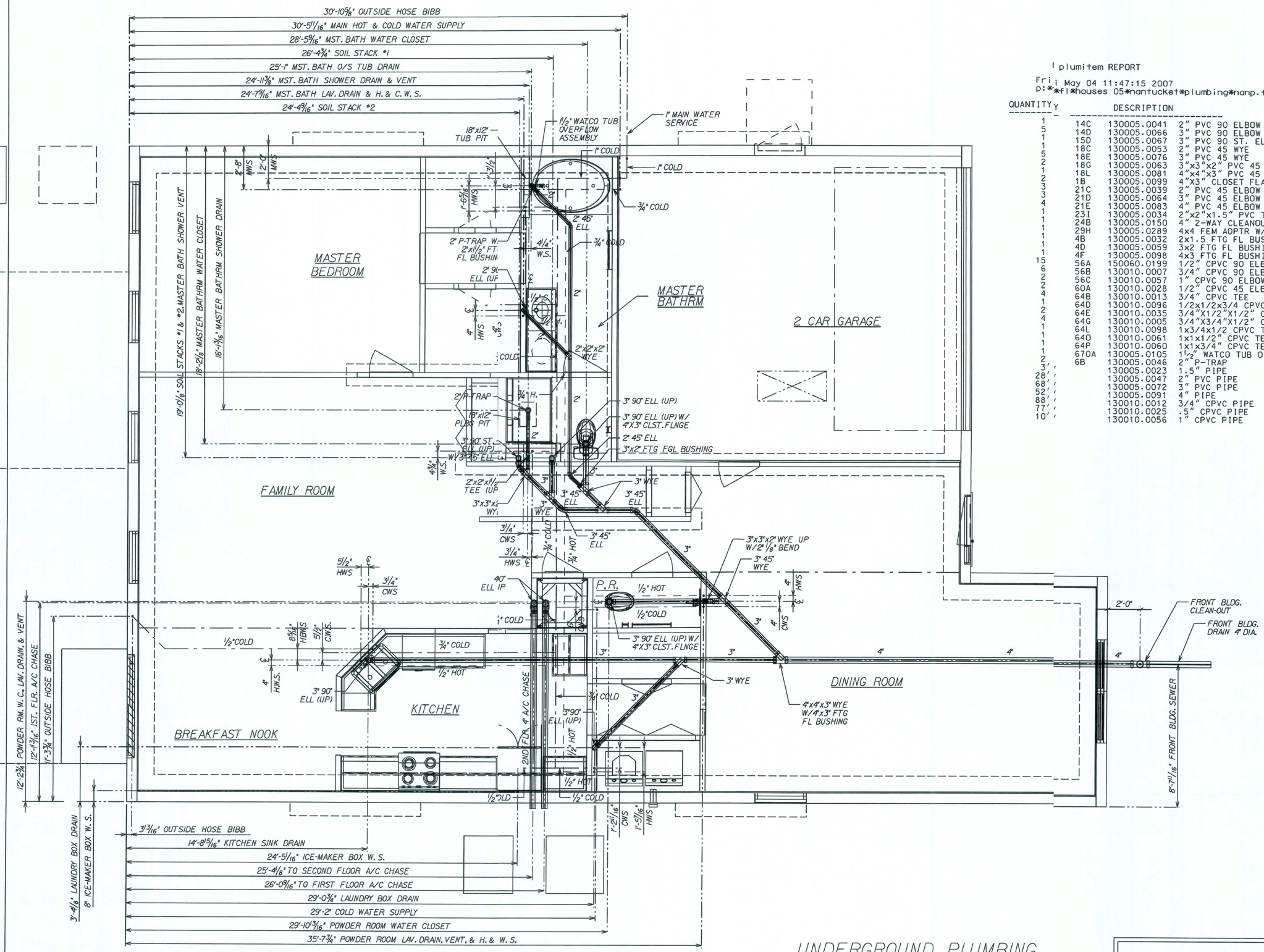

plumitem REPORT

Fri May 04 11:47:15 2007
p:**fl*houses 05*nantucket*plumbing*nanp.fp1

QUANTITY			DESCRIPTION
1	14C	130005.0041	2" PVC 90 ELBOW
5	14D	130005.0066	3" PVC 90 ELBOW
1	15D	130005.0067	3" PVC 90 ST. ELBOW
1	18C	130005.0053	2" PVC 45 WYE
5	18E	130005.0076	3" PVC 45 WYE
2	18G	130005.0063	3"x3"x2" PVC 45 WYE
1	18L	130005.0081	4"x4"x3" PVC 45 WYE
2	1B	130005.0099	4"X3" CLOSET FLANGE
3	21C	130005.0039	2" PVC 45 ELBOW
3	21D	130005.0064	3" PVC 45 ELBOW
4	21E	130005.0083	4" PVC 45 ELBOW
1	23I	130005.0034	2"x2"x1.5" PVC TEE
1	24B	130005.0150	4" 2-WAY CLEANOUT TEE
1	29H	130005.0289	4x4 FEM ADPTR W/ C/O PLG.
1	4B	130005.0032	2x1.5 FTG FL BUSHING
1	4D	130005.0059	3x2 FTG FL BUSHING
1	4F	130005.0098	4x3 FTG FL BUSHING
15	56A	150060.0199	1/2" CPVC 90 ELBOW
6	56B	130010.0007	3/4" CPVC 90 ELBOW
2	56C	130010.0057	1" CPVC 90 ELBOW
2	60A	130010.0028	1/2" CPVC 45 ELBOW
4	64B	130010.0013	3/4" CPVC TEE
1	64D	130010.0096	1/2x1/2x3/4 CPVC TEE
2	64E	130010.0035	3/4"X1/2"X1/2" CPVC TEE
4	64G	130010.0005	3/4"X3/4"X1/2" CPVC TEE
1	64L	130010.0098	1x3/4x1/2 CPVC TEE
1	64O	130010.0061	1x1x1/2" CPVC TEE
1	64P	130010.0060	1x1x3/4" CPVC TEE
1	670A	130005.0105	1 1/2" WATCO TUB O.F. ASSEMBLY
2	6B	130005.0046	2"P-TRAP
3' ,		130005.0023	1.5" PIPE
28' ,		130005.0047	2" PVC PIPE
68' ,		130005.0072	3" PVC PIPE
52' ,		130005.0091	4" PIPE
88' ,		130010.0012	3/4" CPVC PIPE
77' ,		130010.0025	.5" CPVC PIPE
10' ,		130010.0056	1" CPVC PIPE

REVISIONS :
2/23/07 REVISED FPI AS PER DWGS TJM
4/23/07 REVISED FPI TO BACKGROUND TJM
10/26/07 REVISED FPI TO BACKGROUND TJM

Maronda Homes
(407) 321-0064 4005 MARONDA WAY SANFORD, FLORIDA

FLORIDA
THIS STRUCTURE WAS DESIGNED IN ACCORDANCE, AND MEETS THE REQUIREMENTS OF THE FLORIDA BUILDING CODE 2004 : RESIDENTIAL AND 2005, 2006 SUPPLEMENT

AMERICANA | UNGRD. PLUMBING

NANTUCKET

4 BEDROOM W/LOFT

DRAWN BY: | GARAGE: RIGHT

RELEASE DATE: 08/08/06

p:\fl\houses_05\nantucket\plumbing\nanp.fpl

15:02:17

PLOT DATE: 16 JAN 2008

SHEET: FPI

PER FLORIDA PLUMBING CODE: ALL DWV THROUGH FOOTERS WILL BE SLEEVED
REVISED 08-15-05

PER FLORIDA PLUMBING CODE: ALL WATER INTO HOUSE WILL RUN ON 1" CPVC TO FIRST FIXTURE GROUP.
REVISED 10-03-06

WATER LINES
COLD - — - — -
HOT - - - - - - - - -

FLORIDA BUILDING CODE 2004 : RESIDENTIAL

COMPLETE SANITARY PLUMBING DIAGRAM:

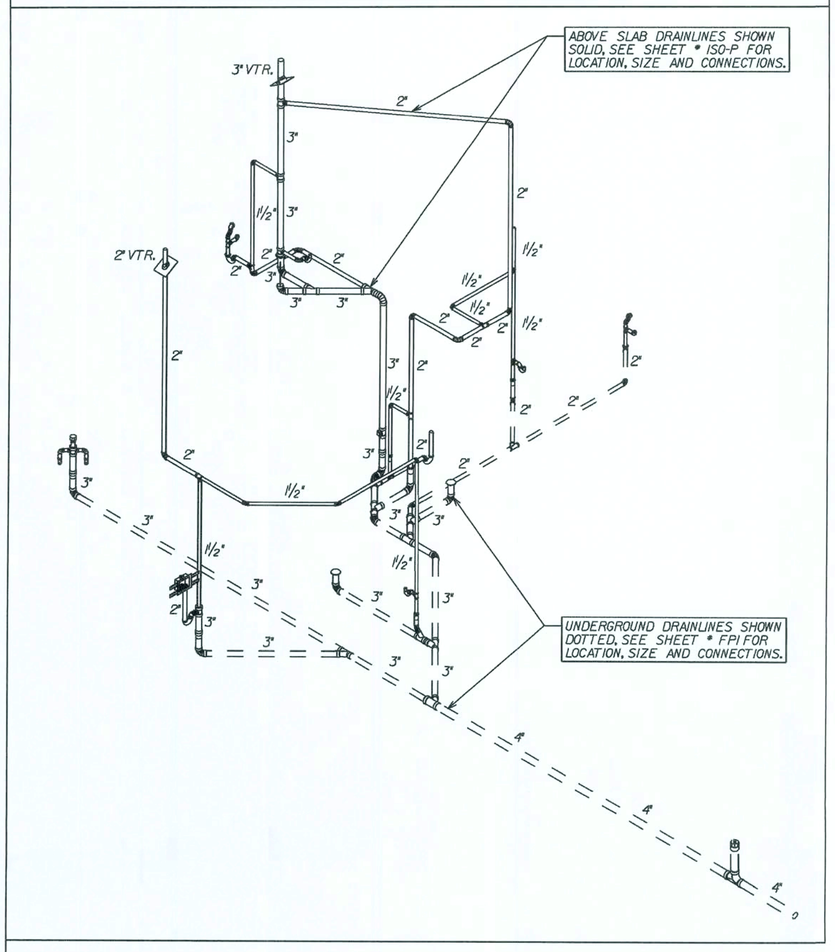

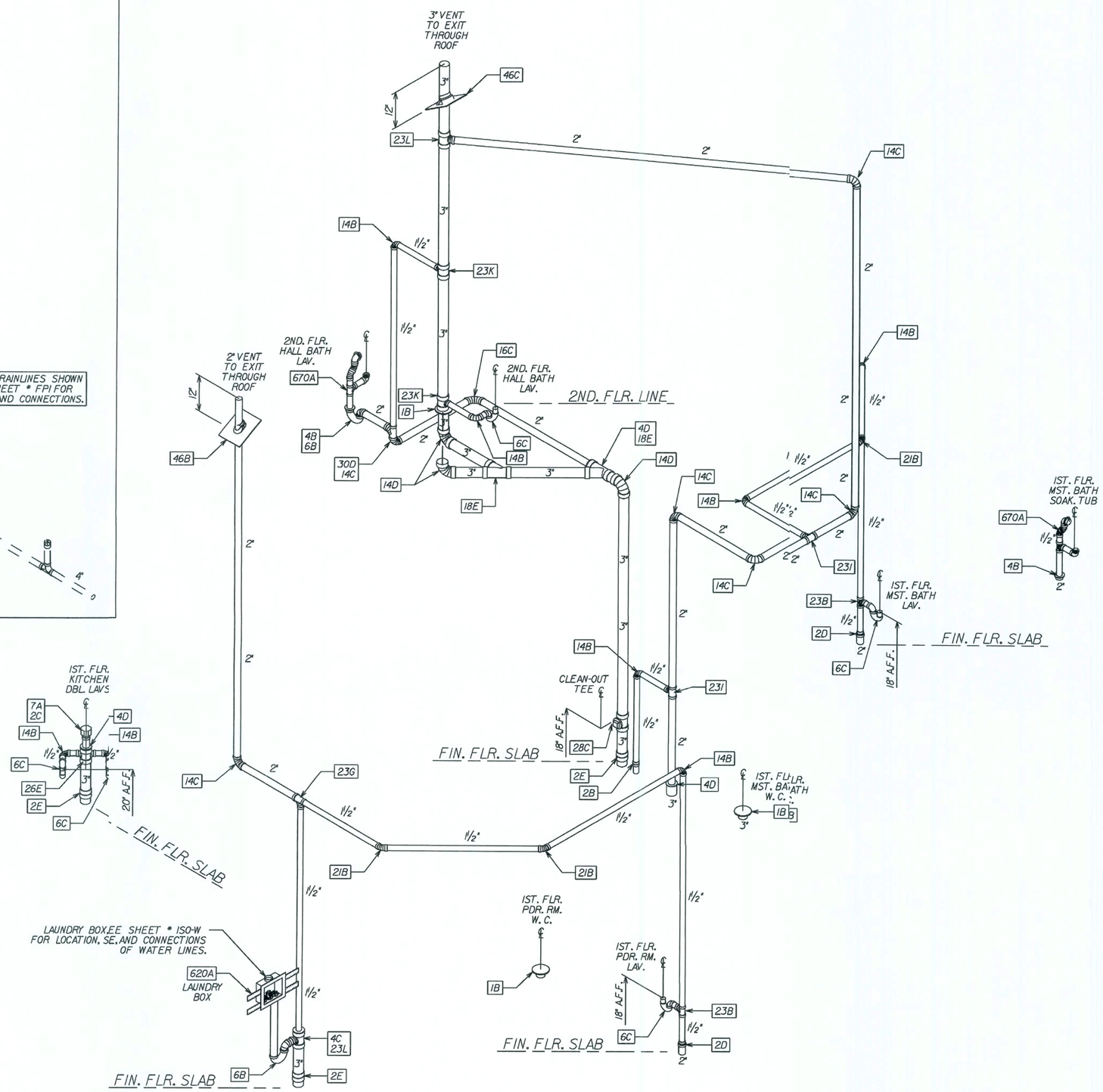

plumitem REPORT

Thu May 10 10:47:44 2007
p:*fl*houses 05*nantucket*plumbing*nanp.plm

QUANTITY			DESCRIPTION
8	14B	130005.0013	1.5" PVC 90 ELBOW
6	14C	130005.0041	2" PVC 90 ELBOW
3	14D	130005.0066	3" PVC 90 ELBOW
1	16C	130005.0119	2" PVC 90 LR ELBOW
2	18E	130005.0076	3" PVC 45 WYE
1	1B	130005.0099	4"X3" CLOSET FLANGE
3	21B	130005.0010	1.5" PVC 45 ELBOW
2	23B	130005.0024	1.5" PVC TEE
1	23G	130005.0029	2"x1.5"x1.5" PVC TEE
2	23I	130005.0034	2"x2"x1.5" PVC TEE
2	23K	130005.0056	3"x3"x1.5" PVC TEE
2	23L	130005.0062	3"x3"x2" PVC TEE
1	26E	130005.0132	3"x3"x1.5"x1.5" DOUBLE TEE
1	28C	130005.0070	3" TEST TEE W/CO PLUG
1	2B	130005.0017	1.5" PVC COUPLING
1	2C	130005.0043	2" PVC COUPLING
2	2D	130005.0033	2x1.5 PVC REDUCER COUPLING
3	2E	130005.0068	3" PVC COUPLING
1	30D	130005.0280	2x1.5x2" ST. TEE
1	46B	130050.0125	2" NEOPRENE ROOF FLASHING
1	46C	130050.0028	3" NEOPRENE ROOF FLASHING
2	4B	130005.0032	2x1.5 FTG FL BUSHING
1	4C	130005.0054	3x1.5 FTG FL BUSHING
3	4D	130005.0059	3x2 FTG FL BUSHING
1	620A	130035.0027	2" WMOB QUADTRO LAUNDRY BOX #38531
2	670A	130005.0105	1 1/2" WATCO TUB OVERFLOW ASSEMBLY
2	6B	130005.0046	2" P-TRAP
5	6C	130005.0107	1.5"x1.25" P-TRAP W/UNION JT
1	7A	130005.0160	1.25-2" STUDOR MINI-VENT

Plumlnth REPORT

Thu May 10 10:47:44 2007
p:*fl*houses 05*nantucket*plumbing*nanp.plm

QUANTITY	DESCRIPTION	
66'	130005.0023	1.5" PIPE
64'	130005.0047	2" PVC PIPE
32'	130005.0072	3" PVC PIPE

PER FLORIDA PLUMBING CODE: ALL DWV THROUGH FOOTERS WILL BE SLEEVED

REVISED 08-15-05

REVISIONS :
4/23/07 REVISED AS PER BACKGRND TJM
10/26/07 REVISED AS PER BACKGRND TJM

Maronda Homes
(407) 321-0064 4005 MARONDA WAY SANFORD, FLORIDA

FLORIDA
THIS STRUCTURE WAS DESIGNED IN ACCORDANCE, AND MEETS THE REQUIREMENTS OF THE FLORIDA BUILDING CODE 2004 : RESIDENTIAL AND 2006 SUPPLEMENT

AMERICANA DWV PLUMBING

NANTUCKET

4 BEDROOM W/LOFT

GARAGE: RIGHT

DRAWN BY:

RELEASE DATE: 08/30/06

p:\houses_05\nantucket\plumbing\nanp.iso

PLOT DATE: 16 JAN 2008

15:02:18

SHEET: ISO-P

FLORIDA BUILDING CODE 2004 : RESIDENTIAL

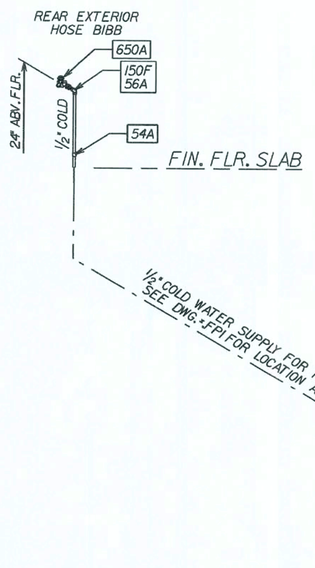

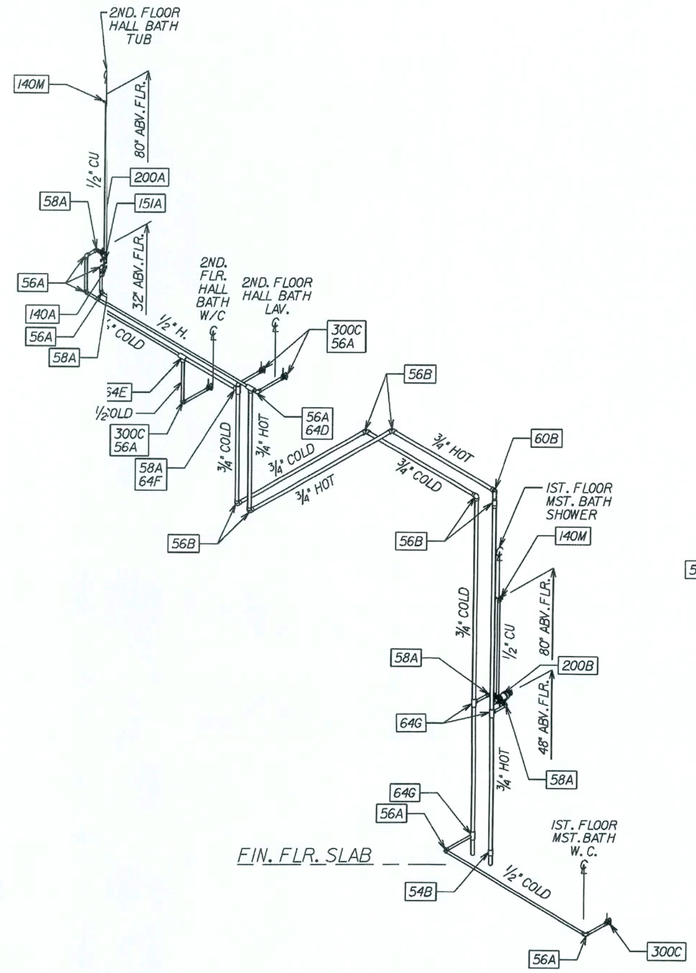

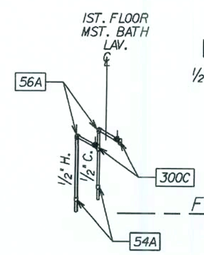

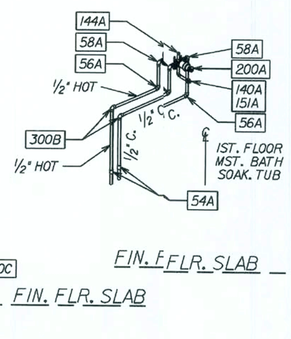

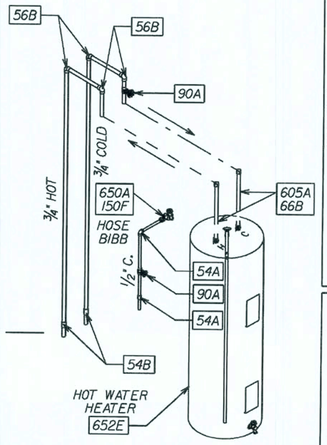

RELOCATION OF HOT WATER TANK SHOWN FOR CLARITY.

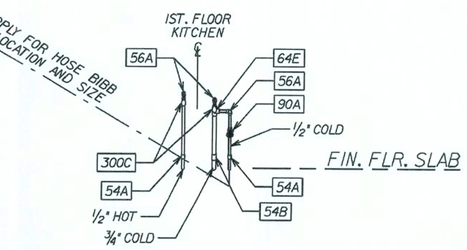

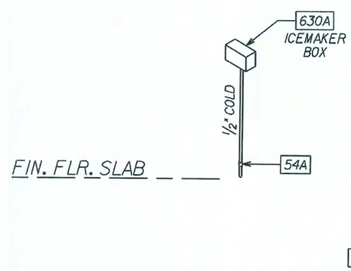

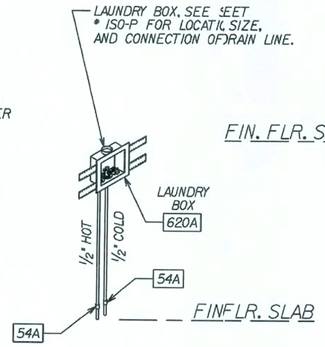

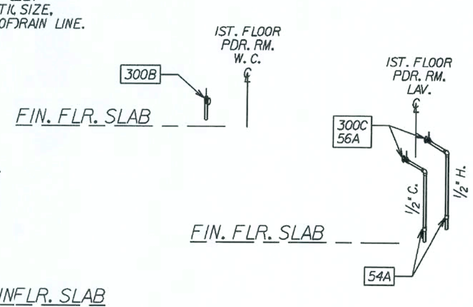

plumitem REPORT

Fri May 04 15:59:40 2007
p:*fl*houses 05*nantucket*plumbing*nanp.wtr

QUANTITY	DESCRIPTION			
2	140A	130025.001	117	1/2" COPPER 90 ELBOW
2	140M	130025.005	51	1/2" COPPER 90 ELBOW Drop
1	144A	130025.002	24	1/2" COPPER CAP
2	150F	130025.004	41	1/2"x3/4" COPPER FEMALE ADAPTER
2	151A	130025.002	20	1/2" COPPER MALE ADAPTER
2	200A	130035.006	61	Tub Diverter
1	200B	130035.006	61	Shower Diverter
1	300B	130010.004	49	Straight Valve 1/2" x 3/8"
10	300C	130010.004	46	1/2" x 3/8"Angle Valve
13	54A	130010.002	22	1/2" CPVC COUPLING
4	54B	130010.000	09	3/4" CPVC COUPLING
21	56A	150060.019	99	1/2" CPVC 90 ELBOW
10	56B	130010.000	07	3/4" CPVC 90 ELBOW
7	58A	130010.002	27	1/2" CPVC 90 ST. ELBOW
2	605A	130055.004	47	Corr Gas App Conn
1	60B	130010.001	14	3/4" CPVC 45 ELBOW
1	620A	130035.002	27	2" WMOB QUADTRO LAUNDRY BOX #38531
1	630A	130035.005	57	Ice Maker Box
1	64D	130010.009	96	1/2x1/2x3/4 CPVC TEE
2	64E	130010.003	35	3/4"X1/2"X1/2" CPVC TEE
1	64F	130010.003	37	3/4"X1/2"X3/4" CPVC TEE
3	64G	130010.000	05	3/4"X3/4"X1/2" CPVC TEE
2	650A	130050.010	09	1/2" Hose Bib
1	652EL	130055.001	12	52 Gal ELECT. WATER HEATER
2	66B	130010.001	10	3/4" CPVC MALE ADAPTER BRASS THREADS
2	70A	130010.003	30	1/2" CPVC FEMALE ADAPTER BRASS THREADS
2	90A	130035.008	80	Shut-Off Valve
1	90B	130050.009	90	3/4" SHUT-OFF GATE VALVE
60'		130010.001	12	3/4" CPVC PIPE
56'		130010.002	25	.5" CPVC PIPE
8'		130025.000	06	1/2" COPPER Pipe

PER FLORIDA PLUMBING CODE: ALL WATER INTO HOUSE WILL RUN ON 1" CPVC TO FIRST FIXTURE GROUP.
REVISED 10-03-06

REVISIONS :
4/23/07 REVISED AS PER BACKGRND TJM
10/26/07 REVISED AS PER BACKGRND TJM

Maronda Homes
(407) 321-0064 4005 MARONDA WAY SANFORD, FLORIDA

FLORIDA:
THIS STRUCTURE WAS DESIGNED IN ACCORDANCE AND MEETS THE REQUIREMENTS OF THE FLORIDA BUILDING CODE 2004 : RESIDENTIAL AND2005, 2006 SUPPLEMENT

AMERICANA | CPVC WATER

NANTUCKET
4 BEDROOM W/LOFT

GARAGE: RIGHT
DRAWN BY:
RELEASE DATE: 08/30/06

SHEET: ISO-W

PLOT DATE: 16 JAN 2008 15:02:19

p:\fl\houses_05\nantucket\plumbing\nanw.iso

FLORIDA BUILDING CODE 2004 : RESIDENTIAL

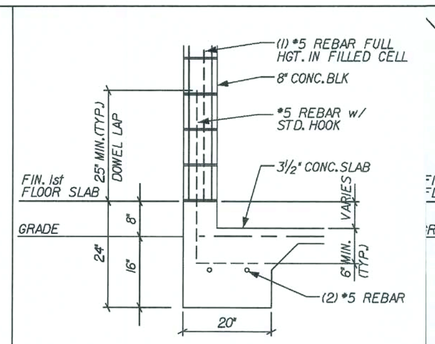

G2 GARAGE 2-STORY
REVISED 11-07-06 DELETED STONE LEDGE
SCALE: ½" = 1'-0"

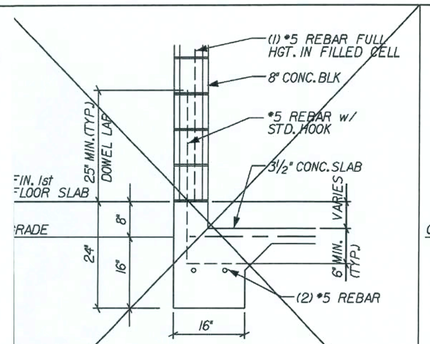

G GARAGE 1-STORY
REVISED 11-07-06 DELETED STONE LEDGE
NOT USED
SCALE: ½" = 1'-0"

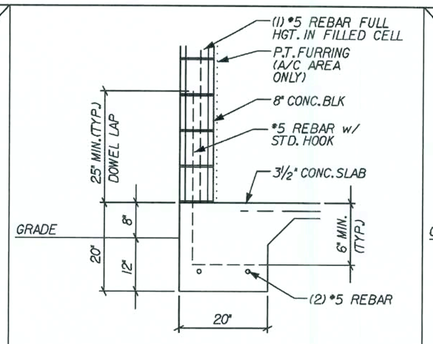

A2 TYPICAL 2-STORY
REVISED 11-07-06 DELETED STONE LEDGE
SCALE: ½" = 1'-0"

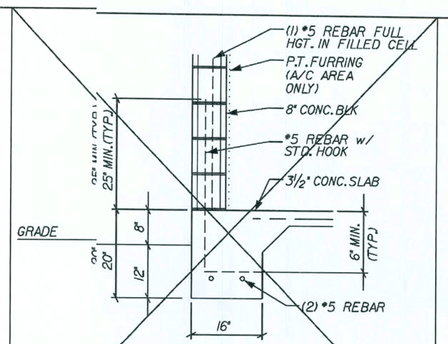

A TYPICAL 1-STORY
REVISED 11-07-06 DELETED STONE LEDGE
NOT USED
SCALE: ½" = 1'-0"

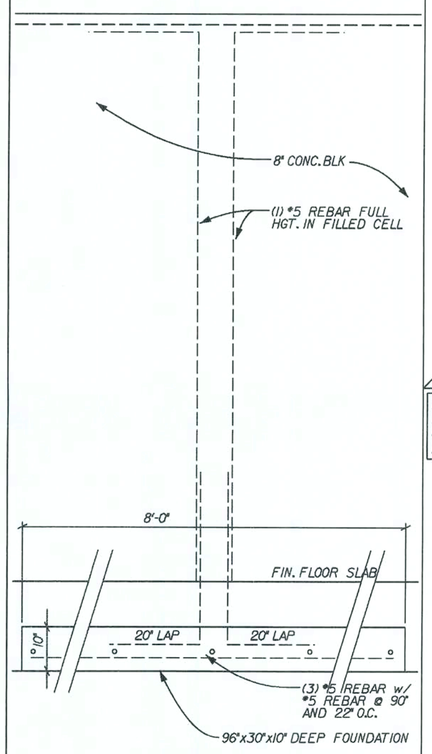

ELEV FOOTING @ GIRDER

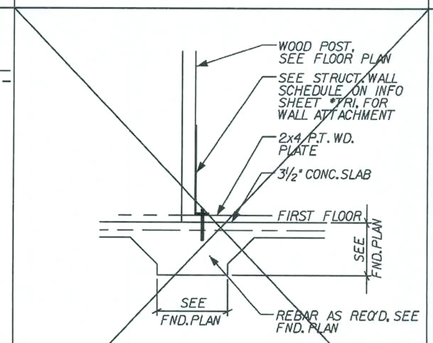

J INTERIOR BEARING POST
NOT USED
SCALE: ½" = 1'-0"

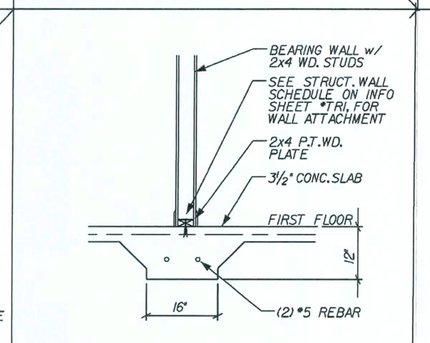

I INTERIOR BEARING
SCALE: ½" = 1'-0"

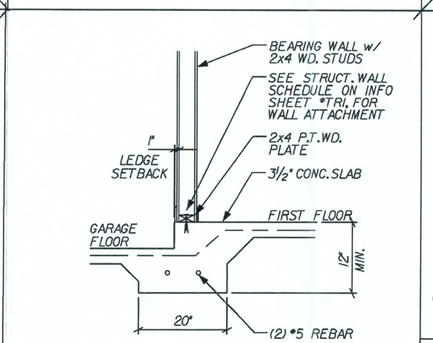

H STEP/BEARING
REVISED 01-31-05
SCALE: ½" = 1'-0"

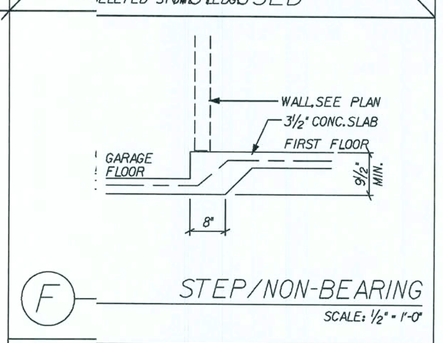

F STEP/NON-BEARING
SCALE: ½" = 1'-0"

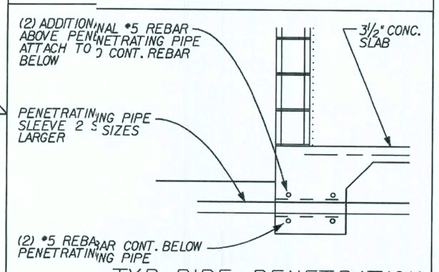

TYP. PIPE PENETRATION
REVISED 06-01-06 ADDED DETAIL
SCALE: ½" = 1'-0"

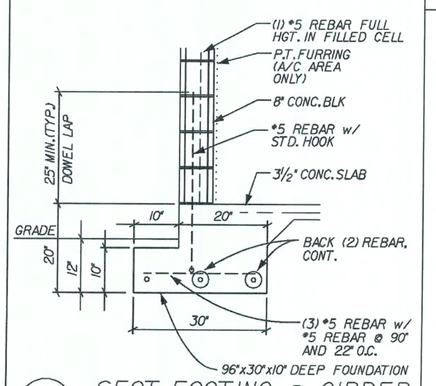

AA SECT. FOOTING @ GIRDER
SCALE: ½" = 1'-0"

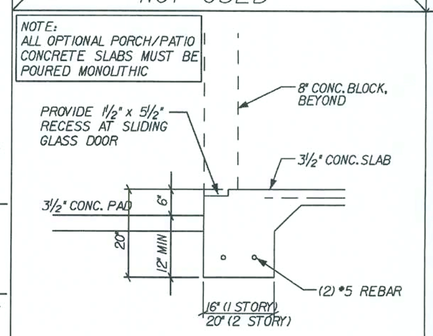

S RECESS @ SLIDER
REVISED 05-06-05
SCALE: ½" = 1'-0"

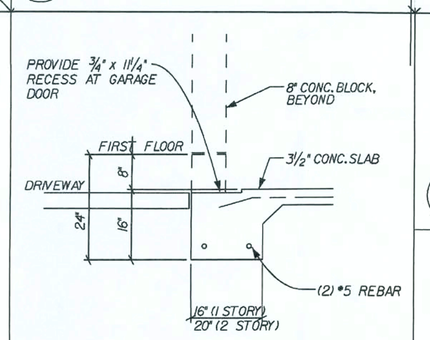

R THICK'N EDGE/GARAGE
REVISED 04-23-06
SCALE: ½" = 1'-0"

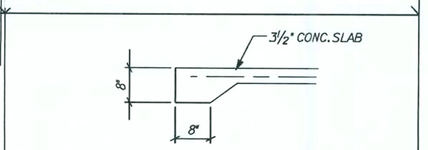

N THICK'N EDGE
SCALE: ½" = 1'-0"

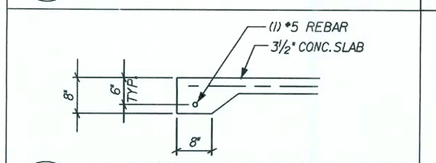

P THICK'N EDGE/BEARING
SCALE: ½" = 1'-0"

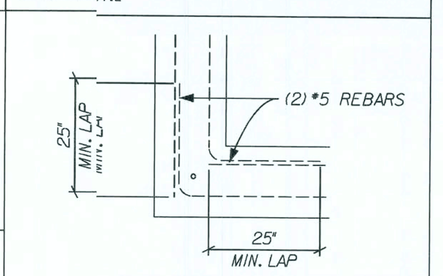

TYP. FTNG @ CORNERS
04-07-08 CONE CORNER DTL
SCALE: ½" = 1'-0"

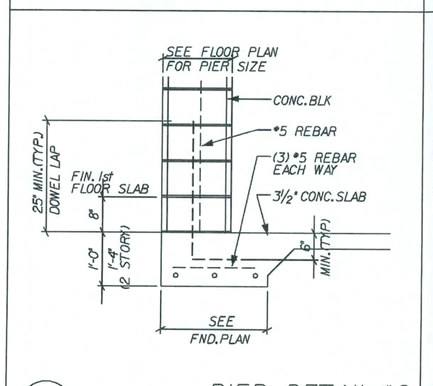

U PIER DETAIL #2
REVISED 02-20-07 16" DEEP @ 2 STORY
SCALE: ½" = 1'-0"

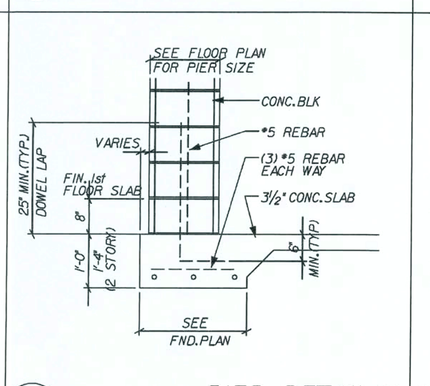

T PIER DETAIL #1
REVISED 02-20-07 16" DEEP @ 2 STORY
SCALE: ½" = 1'-0"

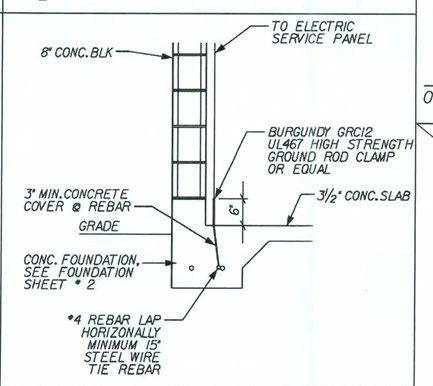

TYP. CONC. ENCASED ELECTRODE
SCALE: ½" = 1'-0"

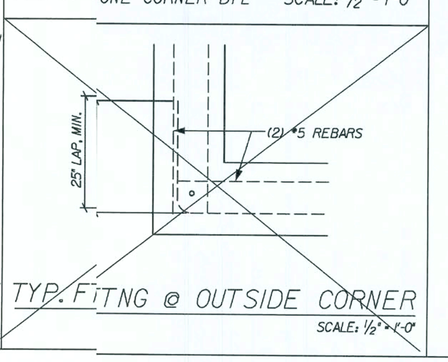

TYP. FTNG @ OUTSIDE CORNER
SCALE: ½" = 1'-0"

REVISIONS :

Maronda Homes
(407) 321-0064 4005 MARONDA WAY SANFORD, FLORIDA

FLORIDA:
THIS STRUCTURE WAS DESIGNED IN ACCORDANCE AND MEETS THE REQUIREMENTS OF THE FLORIDA BUILDING CODE 2004 , RESIDENTIAL AND 2005, 2006 SUPPLEMENT

FOOTINGS

NANTUCKET

GARAGE:

DRAWN BY:

RELEASE DATE: 08-22-06

Maronda Systems
4005 Maronda Way
Sanford, FL 32771
(407)321-0064

Elmer Bergman, P.E.
License No. 50158

MAY 28 2008

SHEET:
FTG

p:\f\houses_05\nantucket\details\nat-std1ftg

PLOT DATE: 16 JAN 2008 15:00:17

FLORIDA BUILDING CODE 2004 : RESIDENTIAL

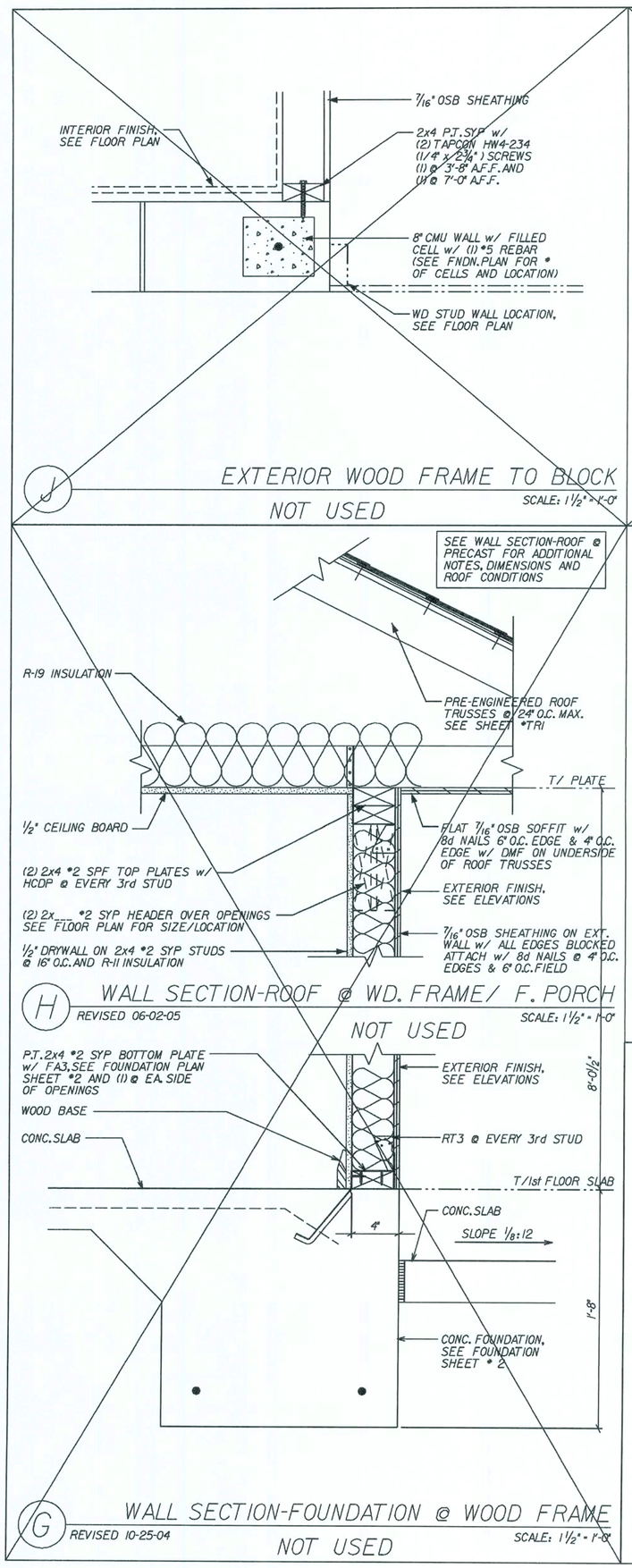

REVISIONS :

Maronda Homes

(407) 321-0064 4005 MARONDA WAY SANFORD, FLORIDA

FLORIDA: THIS STRUCTURE WAS DESIGNED IN ACCORDANCE WITH THE REQUIREMENTS OF THE FLORIDA BUILDING CODE 2004 : RESIDENTIAL AND 2005, 2006 SUPPLEMENT

ONE STORY

WALL SECTIONS

NANTUCKET

GARAGE:

DRAWN BY:

RELEASE DATE: 01-10-06

15.0047

Maronda Systems
4005 Maronda Way
Sanford, FL 32771
(407)321-0064

Elmer Bergman, P.E.
License No. 50158

MAY 28 2008

SHEET:

WS-B1

PLOT DATE: 16 JAN 2008

P:\1\houses_05\nantucket\details\std_ws-b1.sws

FLORIDA BUILDING CODE 2004 : RESIDENTIAL

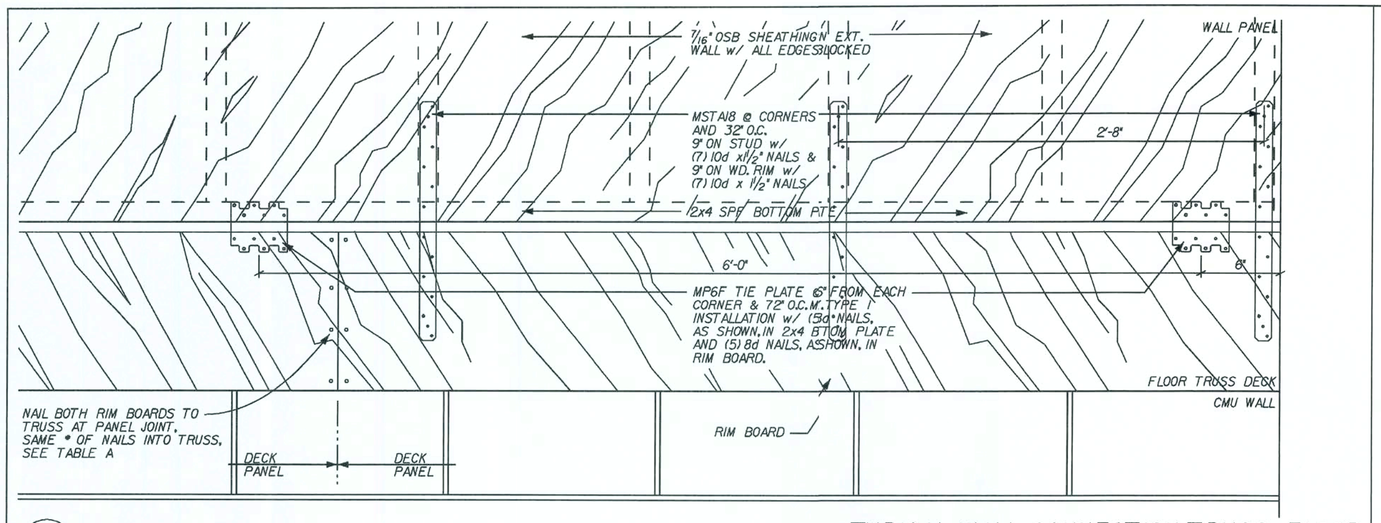

J

TYPICAL WALL CONNECTION-TRUSS FLOOR

SCALE: 1 1/2" = 1'-0"

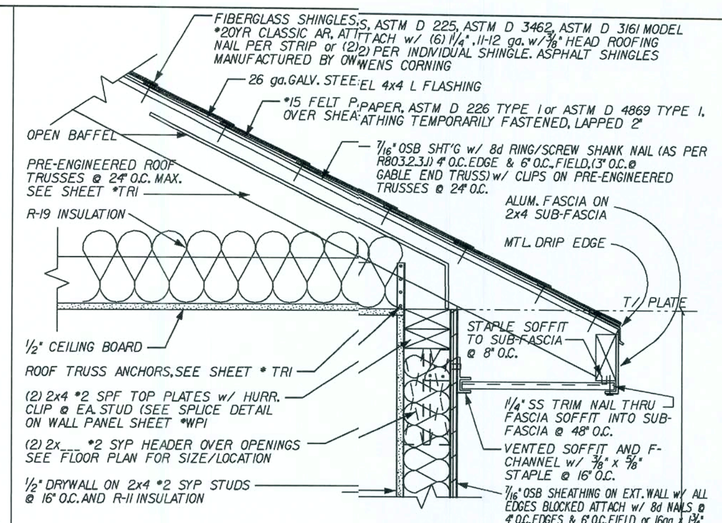

C

WALL SECTION-FRAMED ROOF

REVISED 05-02-07 - OSB ROOF NAIL TYPE

SCALE: 1 1/2" = 1'-0"

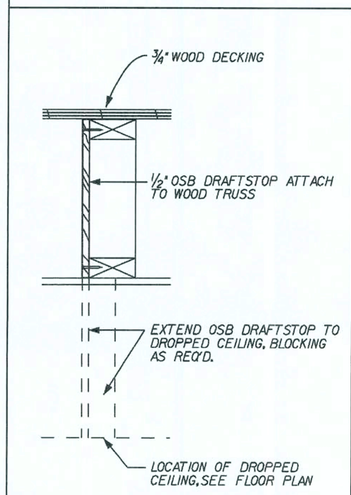

H

DRAFT STOPPING-TRUSS FLOOR

SCALE: 1 1/2" = 1'-0"

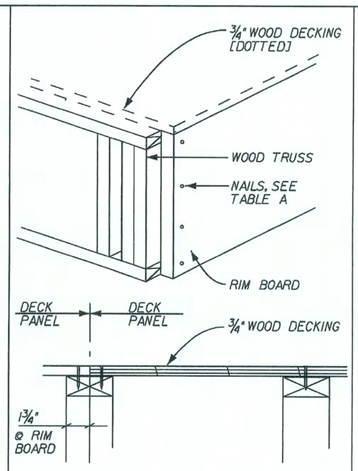

G

DECK CONNECTION @ PANEL JOINT TRUSS FLOOR

SCALE: 1 1/2" = 1'-0"

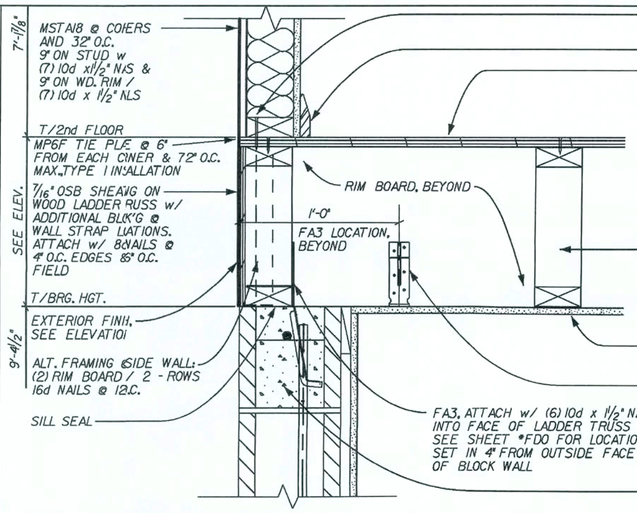

E

PARTIAL SECTION-TRUSS FLOOR SIDE WALL

REVISED 05-02-07
FLOOR DECK NAIL'G

SCALE: 1 1/2" = 1'-0"

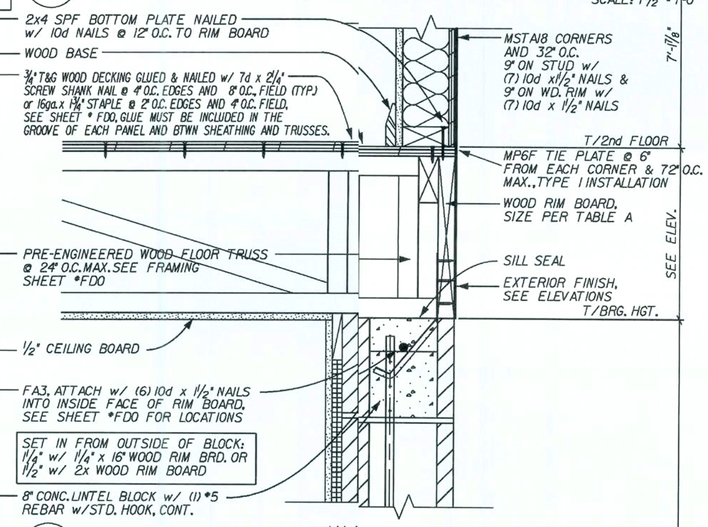

B

WALL SECTION-TRUSS FLOOR

REVISED 05-02-07
FLOOR DECK NAIL'G

SCALE: 1 1/2" = 1'-0"

TABLE A

TRUSS DEP.	RIM BD.	# NAILS, RIM BRD. TO FLOOR TRUSS
9 1/4"	2x10	(4) 10d NAILS
11 1/4"	2x12	(6) 10d NAILS
16"	1 1/4" x 16"	(6) 10d NAILS

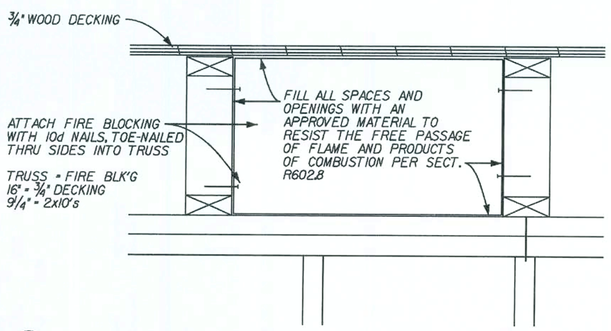

F

FIRE BLOCKING-TRUSS FLOOR

REVISED 05-05-06
REV. NOTE @ OPENINGS

SCALE: 1 1/2" = 1'-0"

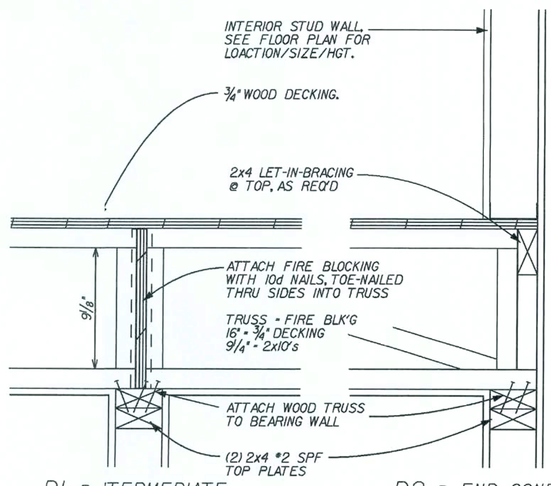

D1 @ INTERMEDIATE D2 @ END CONDITION

D

TYPICAL INTERIOR BEARING WALL-TRUSS FLOOR

REVISED 1-04-07
LET-IN BRACING NOTE

SCALE: 1 1/2" = 1'-0"

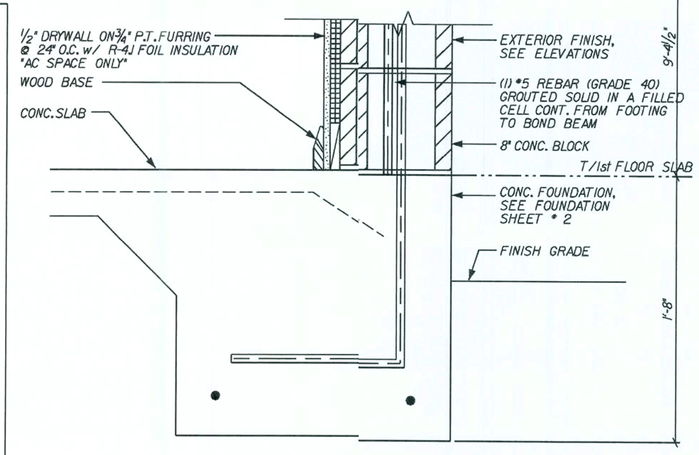

A

WALL SECTION-FOUNDATION @ BLOCK

REVISED 02-19-07
FOIL INSUL TO R-4.1

SCALE: 1 1/2" = 1'-0"

REVISIONS :

Maronda Homes
(407) 321-0064 4005 MARONDA WAY SANFORD, FLORIDA

FLORIDA:
THIS STRUCTURE WAS DESIGNED IN ACCORDANCE AND MEETS THE REQUIREMENTS OF THE FLORIDA BUILDING CODE 2004 : RESIDENTIAL AND 2006 SUPPLEMENT

TWO STORY WALL SECTION

NANTUCKET

GARAGE:

DRAWN BY:

RELEASE DATE: 09/01/04

p:\fhouses_05\nantucket\defaults\std_ws-s1.sws

15:00:18

PLOT DATE: 16 JAN 2008

Maronda Systems
4005 Maronda Way
Sanford, FL 32771
(407)321-0064

Elmer Bergman, P.E.
License No. 50158

MAY 28 2008

SHEET:

WS-S1

FLORIDA BUILDING CODE 2004 : RESIDENTIAL

USP HARDWARE - 160% REVISED 05-10-06

PRODUCT CODE #	MAN.	FASTENERS	UPLIFT
C44	USP	POST (6) 16d BEAM (6) 10d X 1½"	1000
FA3	USP	TOP (4) 10d X 1½" SIDE (2) 10d X 1½"	1155
HC520 CLIP	USP	PLATES (11) 8d STUD (6) 8d	445
HHCP2 CRNR CLIP	USP	TRUSS (10) 10d X 1½" PLATE (10) 10d X 1½"	800
HTA 20 ANCHOR	USP	(14) 10d X 1½"	1615
HTA 20(2) ANCHOR	USP	(13) 10d X 1½"	3230
HTW24	USP	(20) 10d	1325
HUGT2	USP	CONC. ANC.BOLT (2)3/4"-(2)¾"WASH 3¼" " EMBED. -ALL GRDR.-(8) 10d	9790
HUGT3	USP	CONC. ANC.BOLT (2)3/4"-(2)¾"WASH 3¼" EMBED. -ALL GRDR.-(8) 10d	9860
JUS 26	USP	(4) 10d HEADER (4) 10d TRUSS	1115
KST227 STRP ANC.	USP	(34) 16d	4750
LPTA	USP	FACE OF GABLE W/ 2x4 (11) 10d x 1½"	1250
LSTA36	USP	(22) 10d X 1½"	1640
LTW12	USP	(12) 10d	670
LTS20 STRAP ANC	USP	ANCHOR-1/2" WEDGE BOLT 3¼" EMBED. (10) 10d X 1½"STRAP	1890
LBP12 BEARING PLT	USP	½" J-BOLT	2515
LFTA6	USP	PLATE (8) 8d STUD (8) 8d	1035
MP6F	USP	HEADER/STUD (6) 8d TYPE 1 JOIST/PLATE (6) 8d	605
MPAI & MPAIF	USP	HEADER/STUD (6) 8d JOIST/PLATE (6) 8d	660
MSTAI2	USP	(10) 10d	1015
MSTAI8	USP	(14) 10d	1420
MSTA24	USP	(18) 10d	1640
MSTA30	USP	(22) 10d	2065
MTW12	USP	(14) 10d	1030
MTW18	USP	(14) 10d	1030
MTS27B STRP ANC	USP	(24) 16d (1)¾" ANCHOR BOLT 3¼" EMBEDDED	4635
MUGT15	USP	(22) 10d (1)⅝" ANCHOR BOLT 3¾" EMBEDDED	4165
NP37 3⅛X 7	USP	HEADER (6) 16d TOP OF BOT. SEC.(6) 10d X 1½"	
PA 28	USP	(15) 16d	3360
RT-16	USP	TOP PLATES (8) 8d TRUSS (8) 8d X 1½"	1030
RT-16A	USP	TRUSS (9) 10d x 1½" PLATE (8) 10d	1380
RT16-2	USP	TOP PLATES (8) 8d TRUSS (8) 8d X 1½"	1160
RT5 CLIPS L/R	USP	TRUSS (4) 8d PLATE (4) 8d	540
RT3 CLIPS L/R	USP	(4) 8d TOP (4) 8d BOTTOM	530
SKH 26 L\R	USP	HEADER (6) 16d JACK (6) 10d X 1½"	1085
SKHH26 L/R	USP	HEADER (18) 16d JACK (12) 10d X 1½"	2190
SUH 26	USP	HEADER (6) 10d JACK (4) 10d X 1½"	725
SUH 28	USP	HEADER (8) 10d JACK (6) 10d X 1½"	800
TAI2 TA 12/METAL	USP	(5) #10 SCREWS (9) #10 SCREWS	825 910
TA 14	USP	(7) 10d x 1½"	920
TA 18	USP	(8) 10d x 1½"	1205
(2)TA 18	USP	(8) 10d x 1½" 1-PLY (8) 10d x 1½" 2-PLY	2410 2410
TA 24	USP	(8) 10d x 1½"	1205
(2)TA 24	USP	(8) 10d x 1½" 1-PLY (8) 10d x 1½" 2-PLY	2410 2410
THD26	USP	HEADER (18) 16d TRUSS (12) 10d X 1½"	2170
THD28	USP	HEADER (28) 16d TRUSS (16) 10d X 1½"	2330
THD28-2	USP	HEADER (28) 16d TRUSS (16) 10d X 1½"	2485
THDH28-3	USP	HEADER (36) 16d TRUSS (16) 10d X 1½"	2665
THD48	USP	HEADER (28) 16d TRUSS (16) 10d X 1½"	2485
THJ 26 2	CLEVELAND	HIP(7)10d-HEADER(16)16d JACK (5) 10d x1½"	1010
USC63	USP	TRUSS (8) 10d (4)¾" EXP. BOLTS #6170 2¾" EMBEDDED	11150
USC3F	USP	TRUSS (8) 10d (4)¾" EXP. BOLTS #6170 2¾" EMBEDDED	11150
USC73	USP	TRUSS (8) 16d (4)¾" EXP. BOLTS #6170 2¾" EMBEDDED	11150
UGTS63	USP	TRUSS (8) 16d (2)¾" ANC. BOLTS 2¾"" EMBEDDED	6170

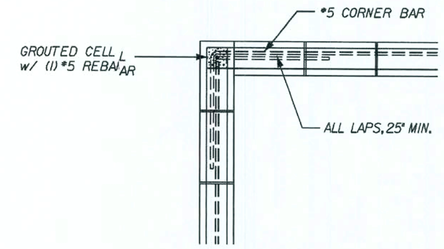

TYPICAL BOND BEAM @ CORNER

REVISED 04-22-05 SCALE: ½" = 1'-0"

CONNECTOR	MAX. UPLIFT
LTW12	775 LBS
LFTA6	990 LBS
RT16	700 LBS

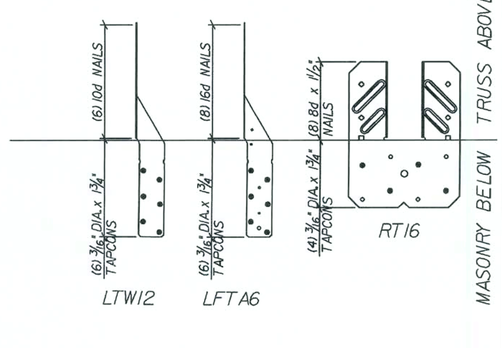

FOR MISSED FLOOR ANCHORS, CONSULT ENGINEER STAFF

ANCHOR FASTENING SCHEDULE
MISSED ROOF TIE DOWN REPAIR

SCALE: N.T.S.

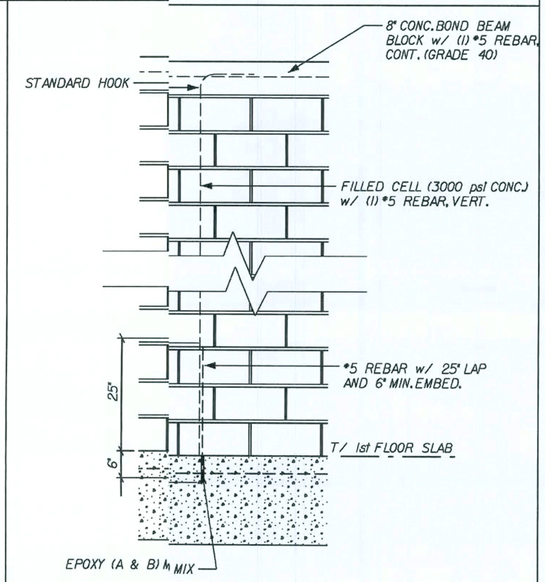

MISSED DOWN ROD REPAIR

SCALE: ½" = 1'-0"

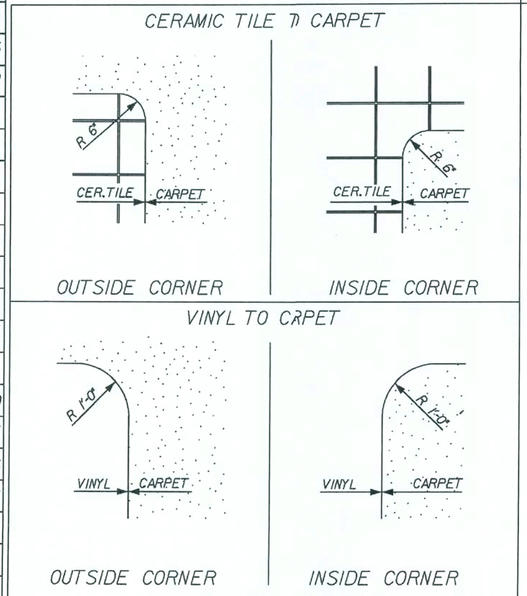

FLOOR EDGE CORNER DETAIL

SCALE: ½" = 1'-0"

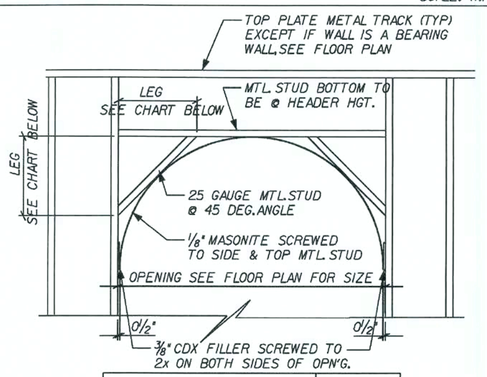

OPENING	LEGS
2'-1" = 2'-0" ARCH OPENING	7½"
2'-7" = 2'-6" ARCH OPENING	8⅞"
2'-9" = 2'-8" ARCH OPENING	9 7/16"
3'-1" = 3'-0" ARCH OPENING	10⅝"
4'-1" = 4'-0" ARCH OPENING	15"
-	-

INTERIOR CURVED ARCH

SCALE: ½" = 1'-0"

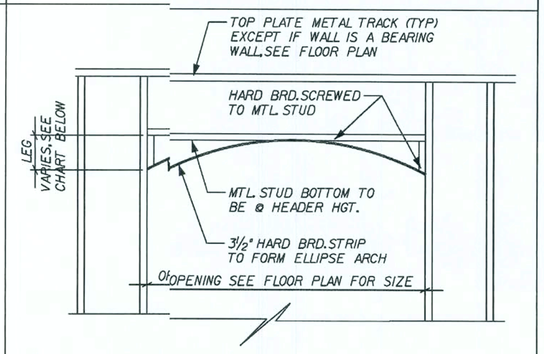

OPENING	LEGS
2'-0" - 3'-1"	4"
3'-2 "- 4'-0"	5½"
4'-1"- 5'-0"	6½"
5'-1" - 7'-0"	8"
7'-1 "- 9'-0"	9½"
9'-1"- 12'-0"	12"

INTERIOR ELLIPSE ARCH

SCALE: ½" = 1'-0"

REVISIONS :

Maronda Homes
(407) 321-0064 4005 MARONDA WAY SANFORD, FLORIDA

FLORIDA:
THIS STRUCTURE WAS DESIGNED IN ACCORDANCE AND MEETS THE REQUIREMENTS OF THE FLORIDA BUILDING CODE 2004 RESIDENTIAL AND 2005, 2006 SUPPLEMENT

STANDARD DETAILS

NANTUCKET

GARAGE:

DRAWN BY:

RELEASE DATE: 01-10-06

PLOT DATE: 16 JAN 2008 15:00:19

p:\Houses_05\nantucket\details\std_details.sdl

Maronda Systems
4005 Maronda Way
Sanford, FL 32771
(407)321-0064

Elmer Bergman, P.E.
License No. 50158

MAY 28 2008

SHEET:

SD1

FLORIDA BUILDING CODE 2004 : RESIDENTIAL

REVISED 02-15-07
83¾" -> 82⅞"

DOOR SCHEDULE

DOOR TYPE	ACTUAL SIZE	ROUGH FRAME OPENING	ROUGH BLOCK OPENING 2" BUCK
2-0 STANDARD I.S.	25½" x 80⅝"	26" x 80⅞"	29" x 82⅜"
2-8 STANDARD I.S.	33½" x 80⅝"	34" x 80⅞"	37" x 82⅜"
2-10 STANDARD I.S.	35½" x 80⅝"	36" x 80⅞"	39" x 82⅜"
3-0 STANDARD I.S.	37½" x 82"	38" x 82¼"	41" x 82⅜"
3-0 w/SIDELIGHT I.S.	51⅛" x 82"	51⅝" x 82¼"	54⅝" x 82⅜"
3-0 w/(2) SIDELIGHT I.S.	64½" x 82"	65" x 82¼"	68" x 82⅜"
5-8 (2)2-10 FRENCH I.S.	70½" x 80⅝"	71" x 80⅞"	74" x 82⅜"

** FINISH OPENING IS DETERMINED BY ACTUAL SIZE +¼" FOR HEIGHT
** FINISH OPENING IS DETERMINED BY ACTUAL SIZE +½" FOR WIDTH
** O.S.= OUTSWING
** I.S.= INSWING

MAX. OPN'G SIZE	JACKS @ EA.END	HEADER SIZE	STUDS @ EA.END 8'-0" MAX.HGT.	STUDS @ EA.END 9'-0" MAX.HGT.	
2'-3"	(1)	2x HEADER, SEE FLOOR PLAN FOR PROPER SIZE FRAMING	1	2	
3'-3"	(1)		2	2	
6'-3"	(1)		2	3	

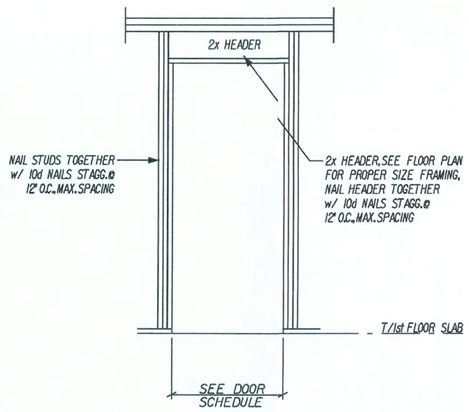

K STD.DOOR - WD RAME, NO-UPLIFT
SCALE: N.T.S.

MAX. OPN'G SIZE	JACKS @ EA.END	HEADER SIZE	STUDS @ EA.END 8'-0" MAX.HGT.	STUDS @ EA.END 10'-0" MAX.HGT.	MSTA 12
2'-3"	(1)	2x HEADER, SEE FLOOR PLAN FOR PROPER SIZE FRAMING	1	2	N/A
3'-3"	(1)		2	2	(1) @ CEN.OF HDR.
6'-3"	(1)		2	3	(1) @ 2'-0" OFF EA.END OF HDR.

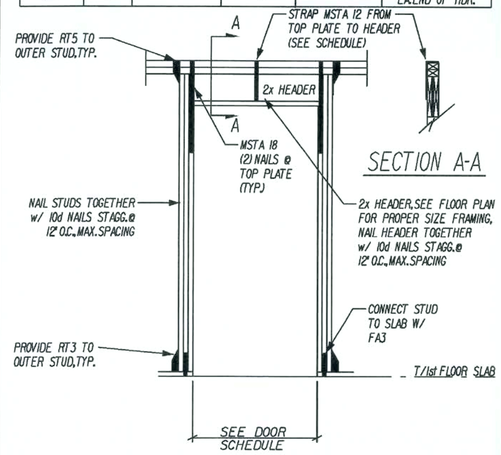

J STD.DOOR - WD FRAME, UPLIFT
SCALE: N.T.S.

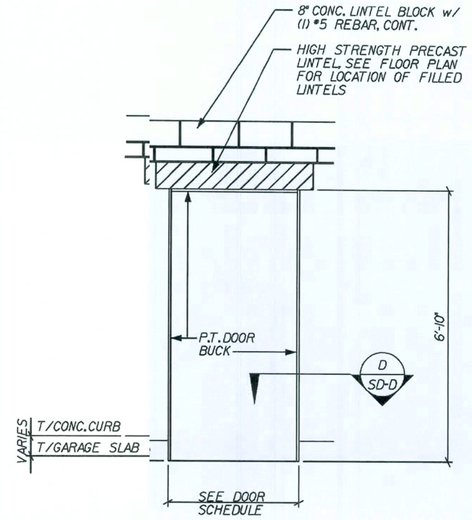

H OPTIONAL SERVICE DOOR
REVISED 08-12-04
SCALE: ⅜" = 1'-0"

CONTRACTOR NOTE:
INSTALLATION FOR GARAGE DOOR TYPES (AS PER TEST #960507-A)

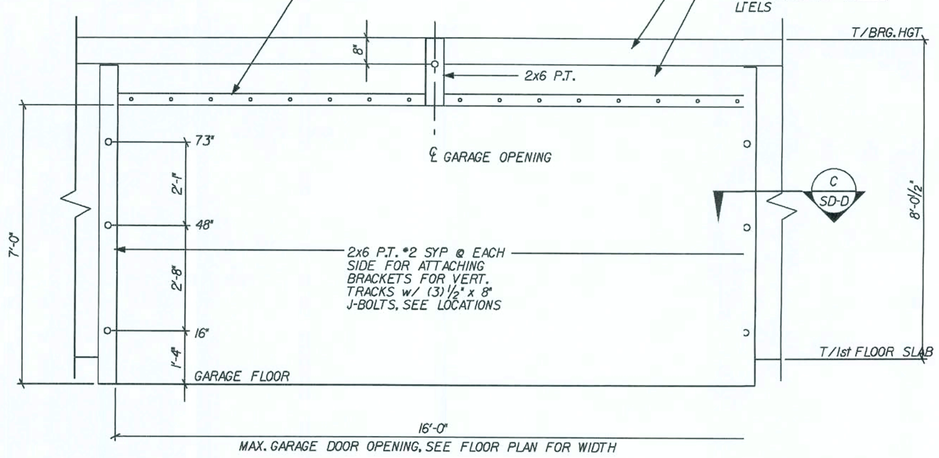

G GARAGE DOR ELEVATION
SCALE: ⅜" = 1'-0"

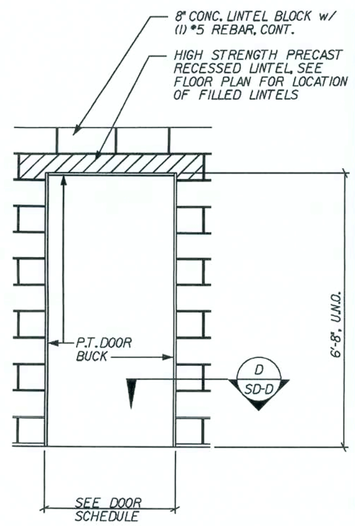

F STANDARD DOOR ELEVATION
SCALE: ⅜" = 1'-0"

CONTRACTOR NOTE:
FOR INSTALLATION SIZES [illegible] OF NORANDEX SLIDING DOOR [illegible] SERIES 500 UP TO 8'-0" x [illegible] x 6'-8" AS PER #96-0131J0 & SERIES 502 UP TO 8'-0" x 8'-0" MAX. (AS PER TEST #96-0608.2[illegible]20)

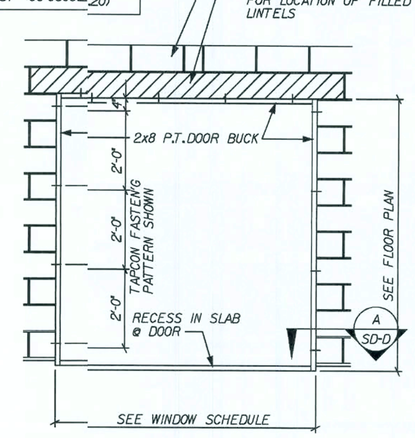

E SLIDING GLASS DOOR ELEVATION
SCALE: ⅜" = 1'-0"

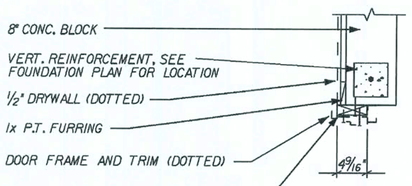

D 2x DOOR BUCK DETAIL
SCALE: ¾" = 1'-0"

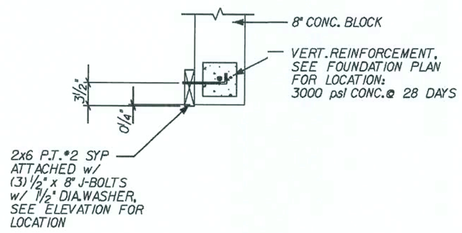

C GARAGE DOOR BUCK DETAIL
SCALE: ¾" = 1'-0"

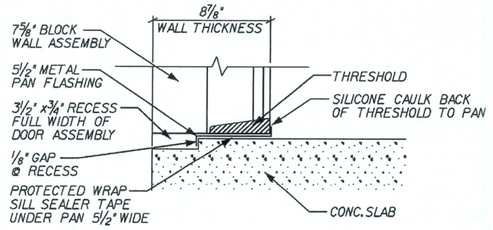

B DOOR PAN FLASHING
REVISED 06-08-06
NEW DETAIL
SCALE: ¾" = 1'-0"

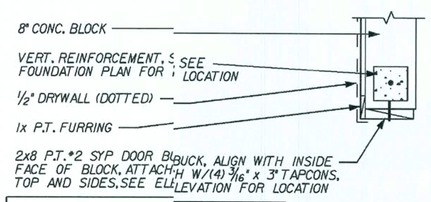

* ALLOWABLE CONTINUOUS [illegible]S FILLER, UP TO 1x NAILED TO 2x8 @ 6" [illegible] O.C. STAGGERED

A SLIDING GLASS DOOR BUCK DETAIL
REVISED 10-21-04
SCALE: ¾" = 1'-0"

REVISIONS :
01-31-07 UNDELETED SERVICE DR. OPT.

Maronda Homes
(407) 321-0064 4005 MARONDA WAY SANFORD, FLORIDA

FLORIDA: THIS STRUCTURE WAS DESIGNED IN ACCORDANCE WITH THE FOLLOWING REQUIREMENTS OF THE FLORIDA BUILDING CODE 2004 : RESIDENTIAL AND 2005, 2006 SUPPLEMENT

DOORS | STANDARD DETAILS

NANTUCKET

GARAGE:
DRAWN BY:
RELEASE DATE: 01-10-06

p:\houses_05\nantucket\details\std_doors.sdd

Maronda Systems
4005 Maronda Way
Sanford, FL 32771
(407)321-0064

Elmer Bergman, P.E.
License No. 50158
MAY 28 2008

SHEET:
SD-D

PLOT DATE: 16 JAN 2008 15:00:20

FLORIDA BUILDING CODE 2004 : RESIDENTIAL

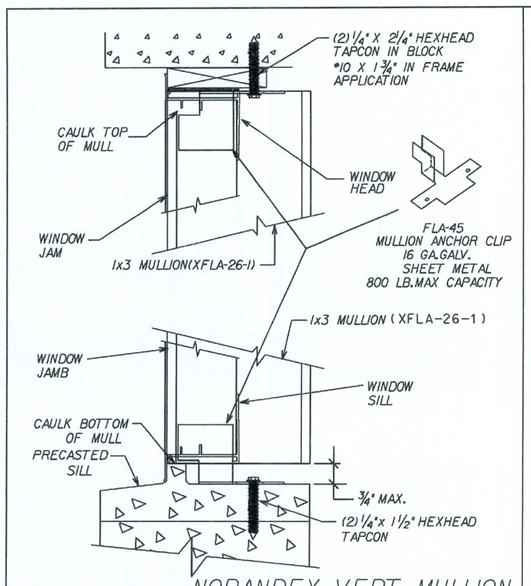

NORANDEX VERT. MULLION CLIP STYLE FLA-45

SCALE: 3/4" = 1'-0"

CONTRACTOR NOTE:
FOR INSTALLATION SIES OF NORANDEX WINDOW SRIES 437/438 UP TO 53 1/8 X 76 3/8" AS PER TEST #96-064.20

STANDARD WINDOW DTAILS IN BLOCK WALLS UP TOO FEET HIGH

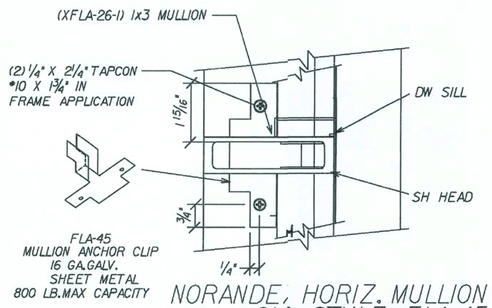

NORANDE, HORIZ. MULLION CLP STYLE FLA-45

SCALE: 3/4" = 1'-0"

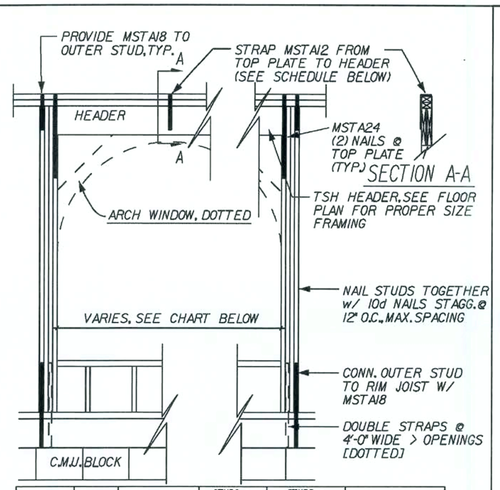

MAX. OPNG SIZE	JACKS @ EA.END	HEADER SIZE	STUDS @ EA.END 8'-0" MAX.HGT.	STUDS @ EA.END 10'-0" MAX.HGT.	MSTA 12
2'-3"	(1)	2x HEADER, SEE FLOOR PLAN FOR PROPER SIZE FRAMING	1	2	N/A
3'-3"	(1)		1	2	(1) @ CEN.OF HDR.
6'-3"	(2)		2	3	(1) @ 2'-0" OFF EA.END OF HDR.

K TYP.HEADER DETAIL-2ND FLOOR FRAMING

REVISED 06-06-07 : PER WALL PANELS

SCALE: N.T.S.

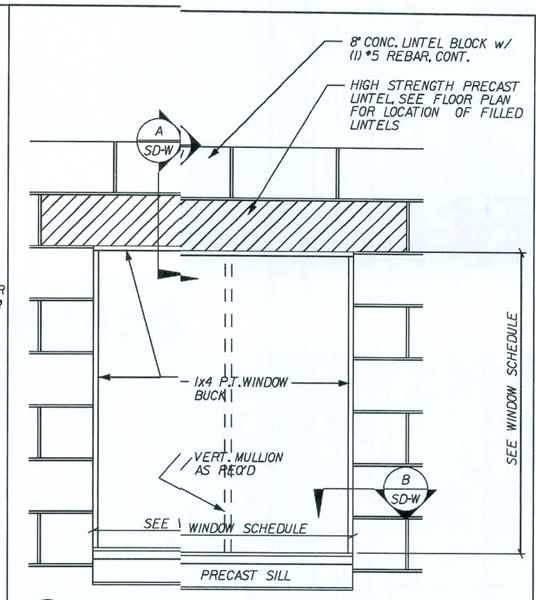

J WINDOW-STANDARD-BLK

SCALE: 3/4" = 1'-0"

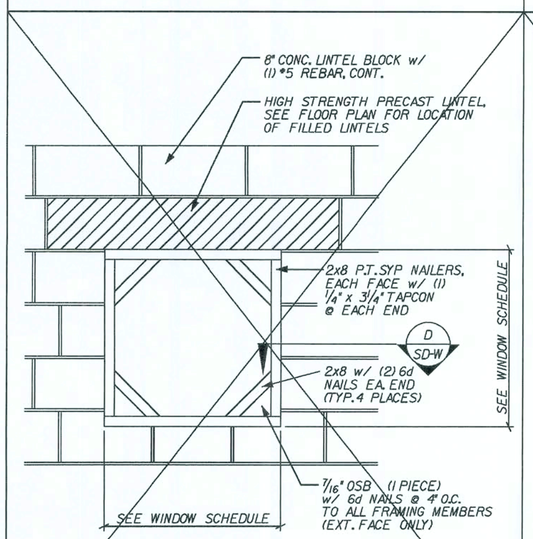

H WINDOW-OCTAGON-BLK

NOT USED

SCALE: 3/4" = 1'-0"

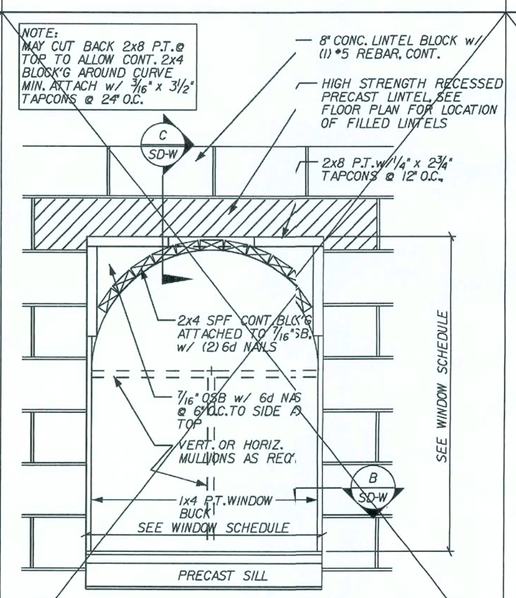

G WINDOW-1/2 ROUND TOP-BLK

NOT USED

SCALE: 3/4" = 1'-0"

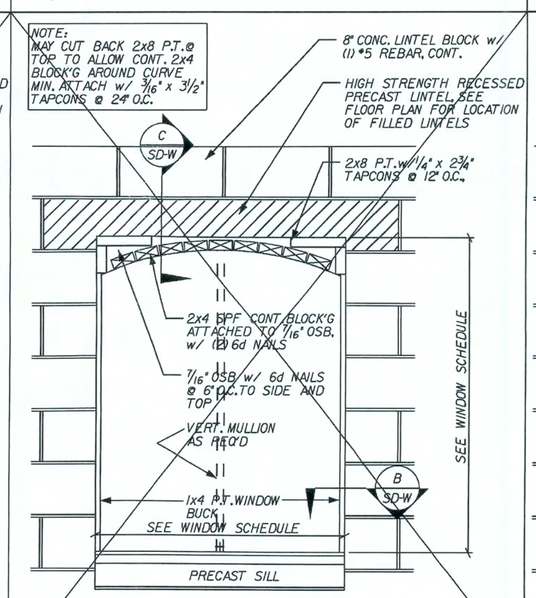

F WINDOW-EYEBROW-BLK

NOT USED

SCALE: 3/4" = 1'-0"

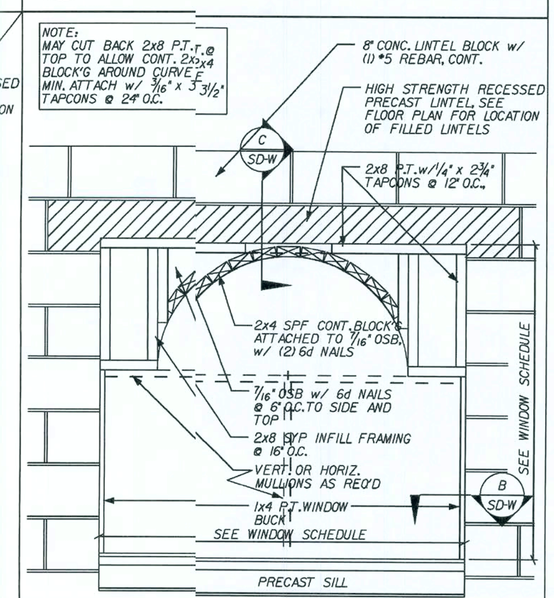

E WINDOW-COMBINATION-BLK

SCALE: 3/4" = 1'-0"

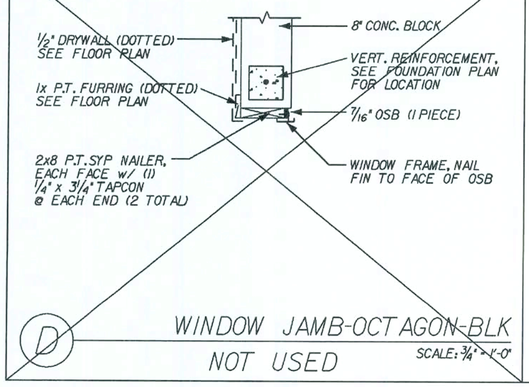

D WINDOW JAMB-OCTAGON-BLK

NOT USED

SCALE: 3/4" = 1'-0"

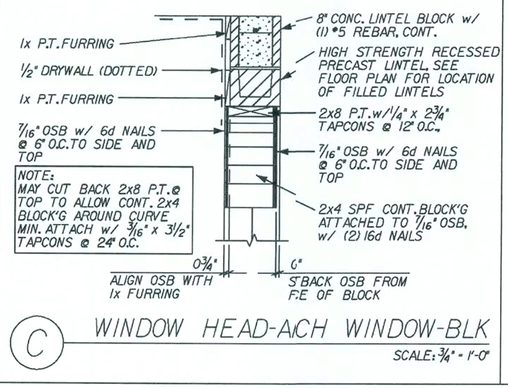

C WINDOW HEAD-ARCH WINDOW-BLK

SCALE: 3/4" = 1'-0"

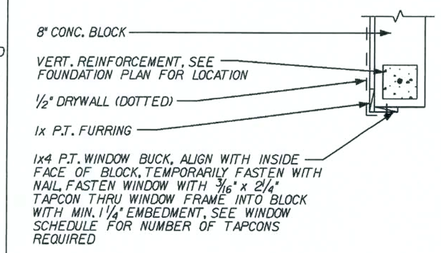

B WINDOW JAMB-STANDARD-BLK

SCALE: 3/4" = 1'-0"

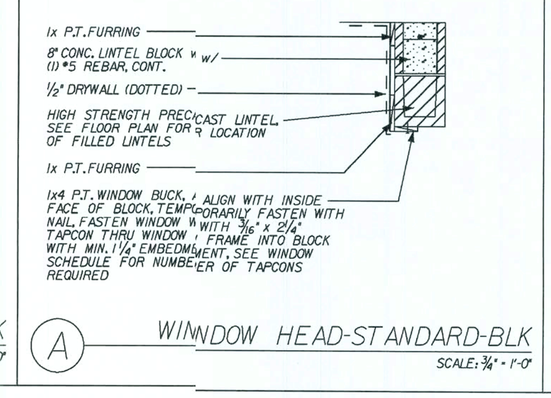

A WINDOW HEAD-STANDARD-BLK

SCALE: 3/4" = 1'-0"

REVISIONS :

Maronda Homes
(407) 321-0064 4005 MARONDA WAY SANFORD, FLORIDA

FLORIDA:
THIS STRUCTURE WAS DESIGNED IN ACCORDANCE AND MEET'S THE REQUIREMENTS OF THE FLORIDA BUILDING CODE RESIDENTIAL 2004 AND 2006 SUPPLEMENT

WINDOWS | STANDARD DETAILS

NANTUCKET

GARAGE:

DRAWN BY:

RELEASE DATE: 01-10-06

PLOT DATE: 16 JAN 2008

15,000.21

p:\houses_05\nantucket\details\std_windows.sdw

Maronda Systems
4005 Maronda Way
Sanford, FL 32771
(407)321-0064

Elmer Bergman, P.E.
License No. 50158

MAY 28 2008

SHEET:

SD-W

FLORIDA BUILDING CODE 2004 : RESIDENTIAL

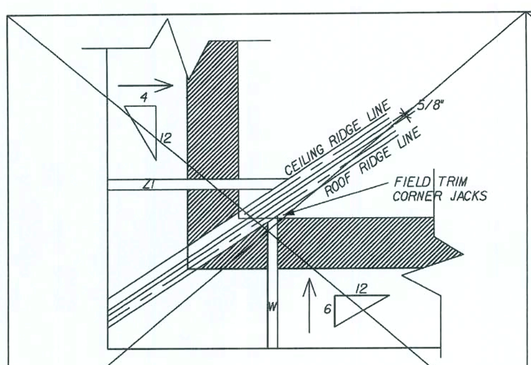

TRUSS PLACEMENT CORNER DETAIL B
NOT USED
SCALE: N.T.S.

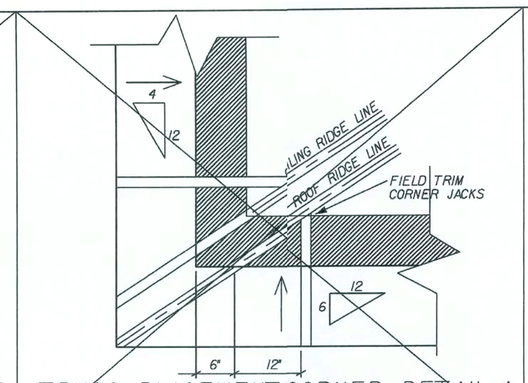

TRUSS PLACEMENT CORNER DETAIL A
NOT USED
SCALE: N.T.S.

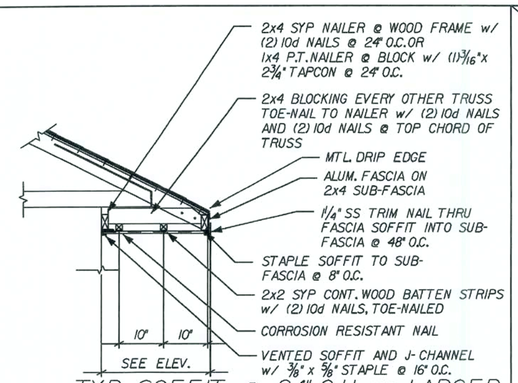

TYP. SOFFIT @ 24" O.H. or LARGER
REVISED 01-11-05
SCALE: 1/2" = 1'-0"

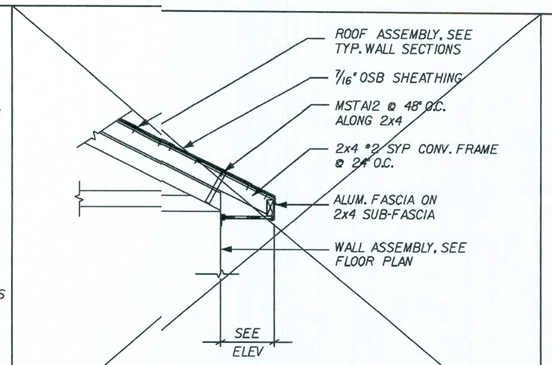

CONV. FRAMED HIP ROOF
NOT USED
SCALE: 1/2" = 1'-0"

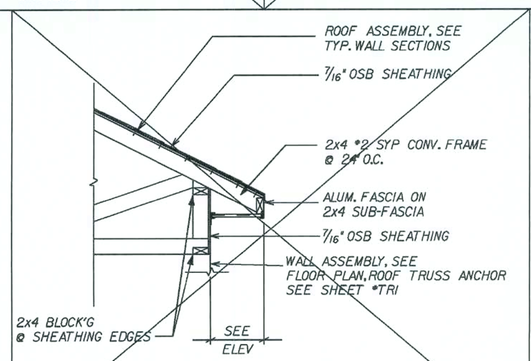

DETAIL @ RAISED HEEL
NOT USED
SCALE: 1/2" = 1'-0"

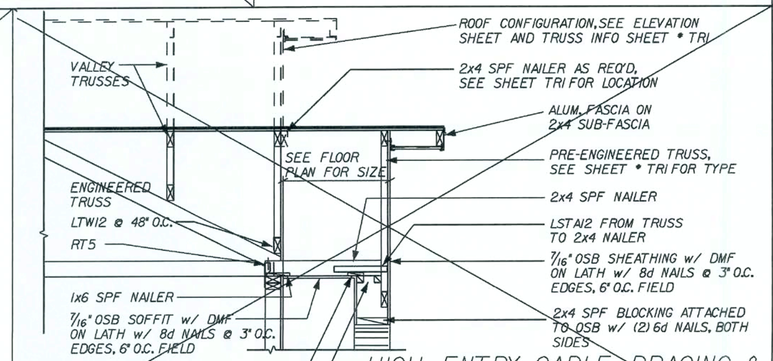

NOTE: GABLE BRACED BY ROOF AND/OR CEILING DIAPHRAGM STRONGBACK AND CONNECTIONS, NO X-BRACING NEEDED.

HIGH ENTRY GABLE BRACING & SHEATHING CONNECTION DETAIL
NOT USED
SCALE: 1/2" = 1'-0"

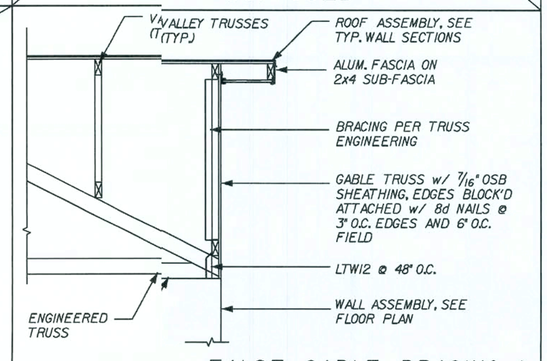

NOTE: GABLE BRACED BY ROOF AND/OR CEILING DIAPHRAGM STRONGBACK AND CONNECTIONS, NO X-BRACING NEEDED.

FALSE GABLE BRACING & SHEATHING CONNECTION DETAIL
SCALE: 1/2" = 1'-0"

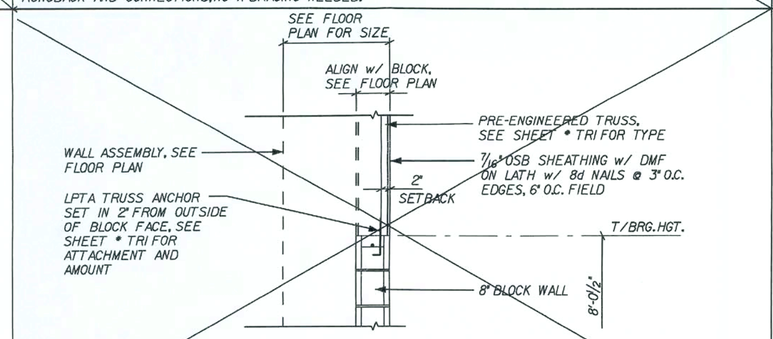

TRUSS / BLOCK CONNECTION DETAIL
NOT USED
SCALE: 1/2" = 1'-0"

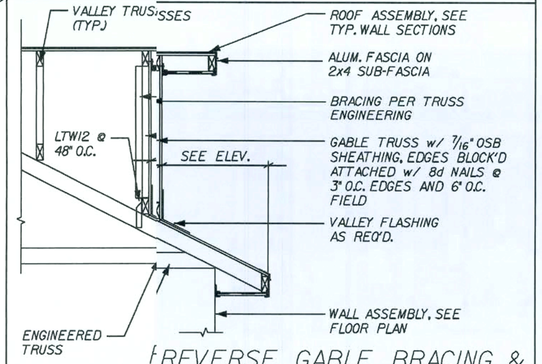

REVERSE GABLE BRACING & SHEATHING CONNECTION DETAIL
SCALE: 1/2" = 1'-0"

NOTE: GABLE BRACED BY ROOF AND/OR CEILING DIAPHRAGM STRONGBACK AND CONNECTIONS, NO X-BRACING NEEDED.

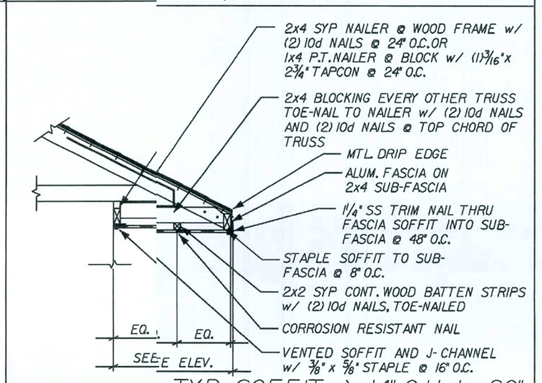

TYP. SOFFIT > 14" O.H. to 20"
REVISED 12-20-06
SCALE: 1/2" = 1'-0"

REVISIONS :

Maronda Homes
(407) 321-0064 4005 MARONDA WAY SANFORD, FLORIDA

FLORIDA: THIS STRUCTURE WAS DESIGNED IN ACCORDANCE AND MEETS THE REQUIREMENTS OF THE FLORIDA BUILDING CODE 2004 : RESIDENTIAL AND 2005, 2006 SUPPLEMENT

p:\houses_05\nantucket\details\std_roof.sdr

ROOF | STANDARD DETAILS

NANTUCKET

GARAGE:

DRAWN BY:

RELEASE DATE: 01-10-06

15:00:22

PLOT DATE: 16 JAN 2008

Maronda Systems
4005 Maronda Way
Sanford, FL 32771
(407)321-0064

Elmer Bergman, P.E.
License No. 50158

MAY 28 2008

SHEET:
SD-R

FLORIDA BUILDING CODE 2004 : RESIDENTIAL

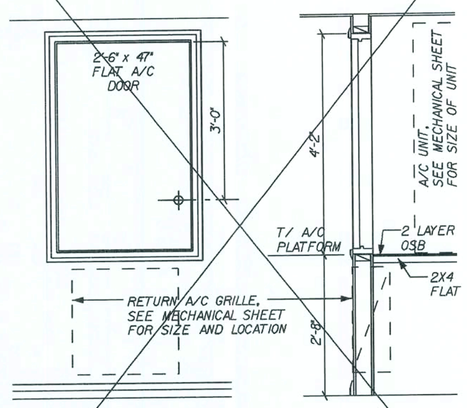

ELEVATION SECTION

7'-0" CEIL. ENCLOSED A/C PLATFORM

SCALE: 1/2" = 1'-0"

NOT USED

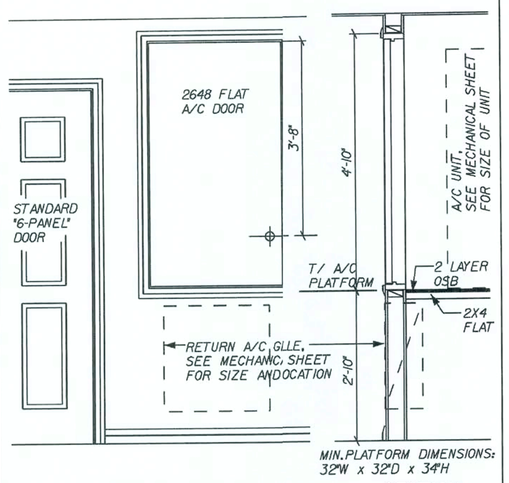

ELEVATION SECTION

ENCLOSED A/C PLATFORM

SCALE: 1/2" = 1'-0"

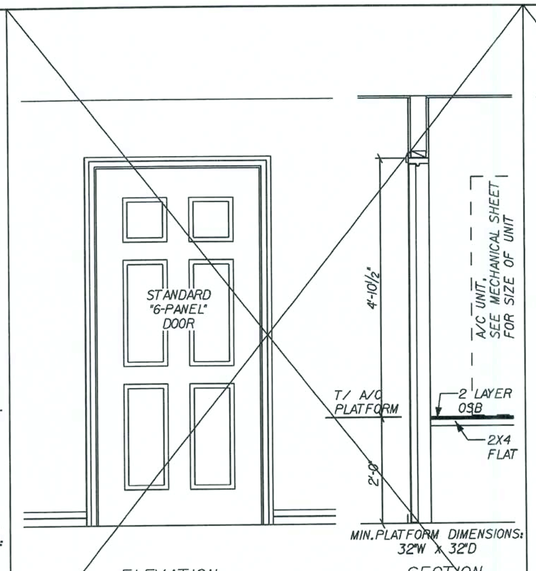

ELEVATION SECTION

FULL DOOR ENCLOSED A/C PLATFORM

SCALE: 1/2" = 1'-0"

NOT USED

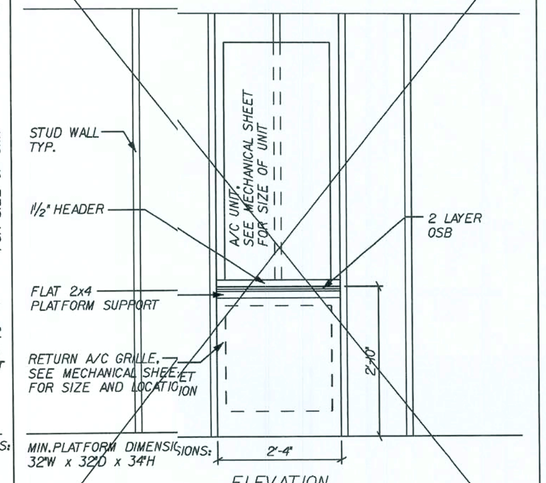

ELEVATION

OPEN A/C PLATFORM

SCALE: 1/2" = 1'-0"

NOT USED

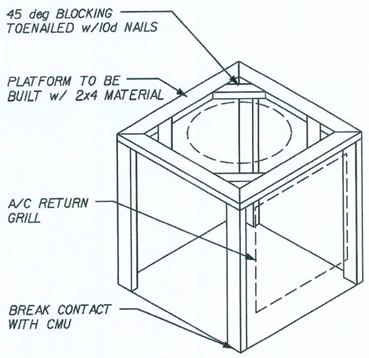

A/C PLATFORM FRAMING

REVISED 01-24-05

SCALE: 1/2" = 1'-0"

REVISIONS :

Maronda Homes

(407) 321-0064 4005 MARONDA WAY SANFORD, FLORIDA

FLORIDA:
THIS STRUCTURE WAS DESIGNED IN ACCORDANCE AND MEETS THE REQUIREMENTS OF THE FLORIDA BUILDING CODE 2004, RESIDENTIAL AND 2006 SUPPLEMENT.

STANDARD PLATFORM DETAILS

NANTUCKET

A/R-HEAT DETAILS

DRAWN BY:

GARAGE: RIGHT

RELEASE DATE: 01-10-06

p:\f\houses_05\nantucket\details\std_heating.sdh

15:00:23

Maronda Systems
4005 Maronda Way
Sanford, FL 32771
(407)321-0064

Elmer Bergman, P.E.
License No. 50158

MAY 28 2008

SHEET:

SD-H

PLOT DATE: 16 JAN 2008

FLORIDA BUILDING CODE 2004 : RESIDENTIAL

RG OPTIONAL WOOD RAILING AND SPINDELS IN LIEU OF 42" DRWALL SLOPED WALL

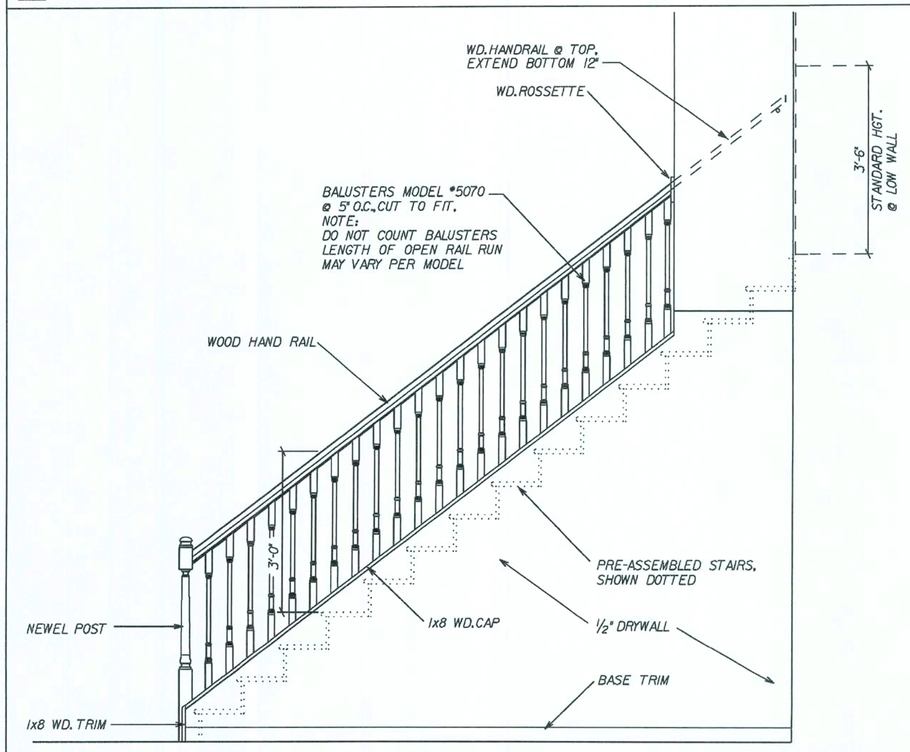

OPEN RAIL STAIR ELEVATION

SCALE: 1/2" = 1'-0"

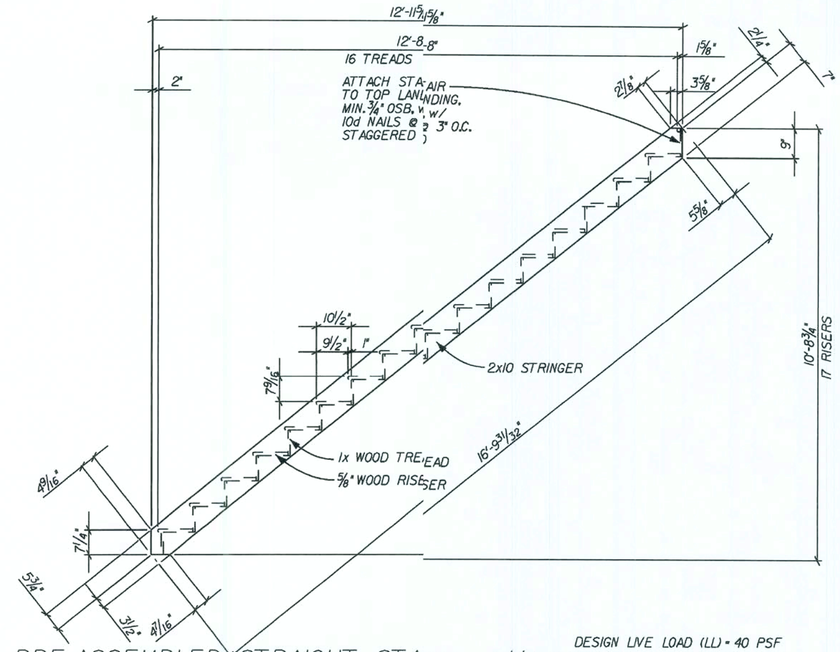

PRE-ASSEMBLED STRAIGHT STAIR : 9 1/2" TREAD [16" FRM'G]

DESIGN LIVE LOAD (LL) = 40 PSF

SCALE: 3/8" = 1'-0"

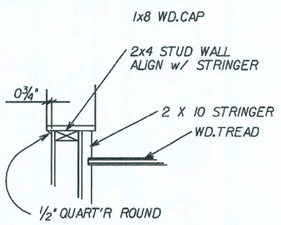

SECTION B

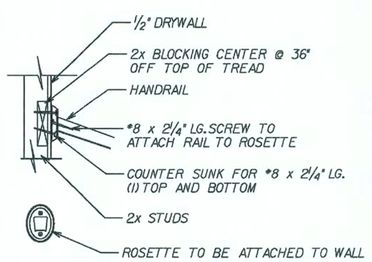

RAIL ATTACHMENT TO WALL

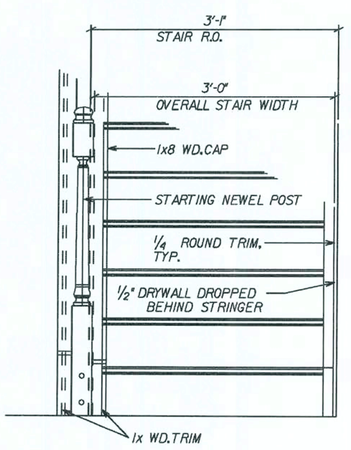

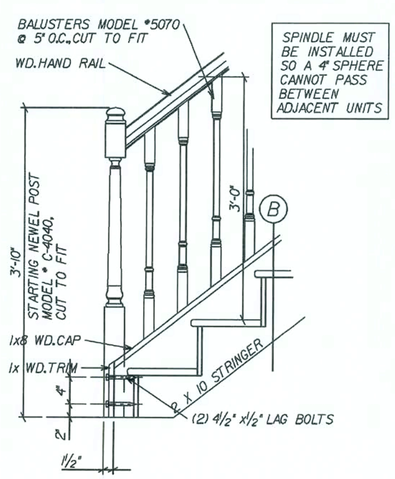

OPTIONAL OPEN RAIL STAIR DETAILS

REVISED 01-25-05

SCALE: 3/4" = 1'-0"

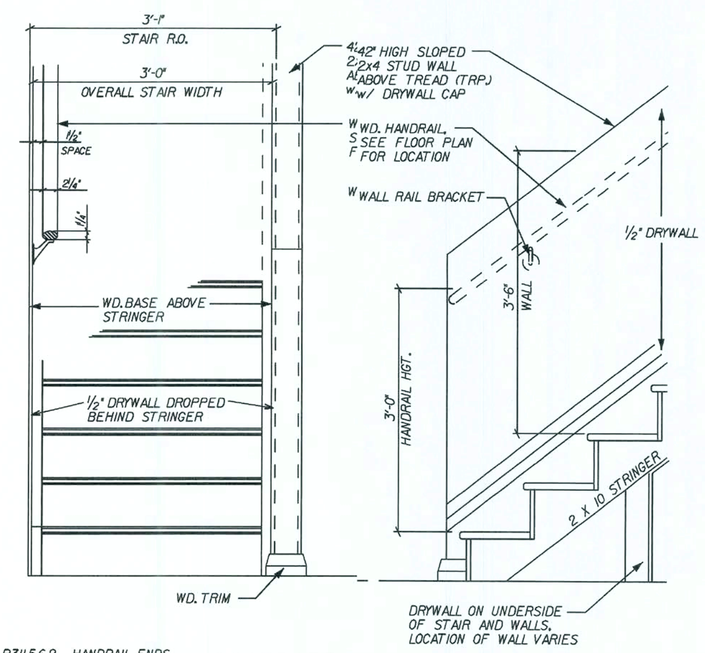

NOTE:
SECTION R311.5.6.2 HANDRAIL ENDS SHALL BE RETURNED TO WALL

REVISED 11-12-07
ADDED WOOD BASE ABOVE STRINGER

STANDARD STAIR w/ 42" HIGH WALL

SCALE: 3/4" = 1'-0"

REVISIONS :

Maronda Homes

(407) 321-0064 4005 MARONDA WAY SANFORD, FLORIDA

FLORIDA:
THIS STRUCTURE WAS DESIGNED IN ACCORDANCE, AND MEETS THE REQUIREMENTS OF THE FLORIDA BUILDING CODE 2004, RESIDENTIAL AND 2006 SUPPLEMENT.

p:\7\houses_05\vantucker\details\17-129_25.str

16" FRM'G | 17 RISER : STRAIGHT

STAIR DETAILS

GARAGE:

DRAWN BY:

RELEASE DATE: 08-01-06

15:00:23

Maronda Systems
4005 Maronda Way
Sanford, FL 32771
(407)321-0064

Elmer Bergman, P.E.
License No. 50158

MAY 28 2008

SHEET:

STR

PLOT DATE: 16 JAN 2008

FLORIDA BUILDING CODE 2004 : RESIDENTIAL

Disclaimer: The purpose of this installation drawing is to present the manufacturer's recommendations for anchorage (i.e., concrete screws, wood screws, nails and Vulkem structural adhesive) to achieve the design pressure specified on the fenestration product as required by Florida Building Code, Section 1707.4.4. Anchorage methods. Recommendations regarding flashing, sealing, sealants or other joint sealant practices does not constitute a warranty either expressed or implied.

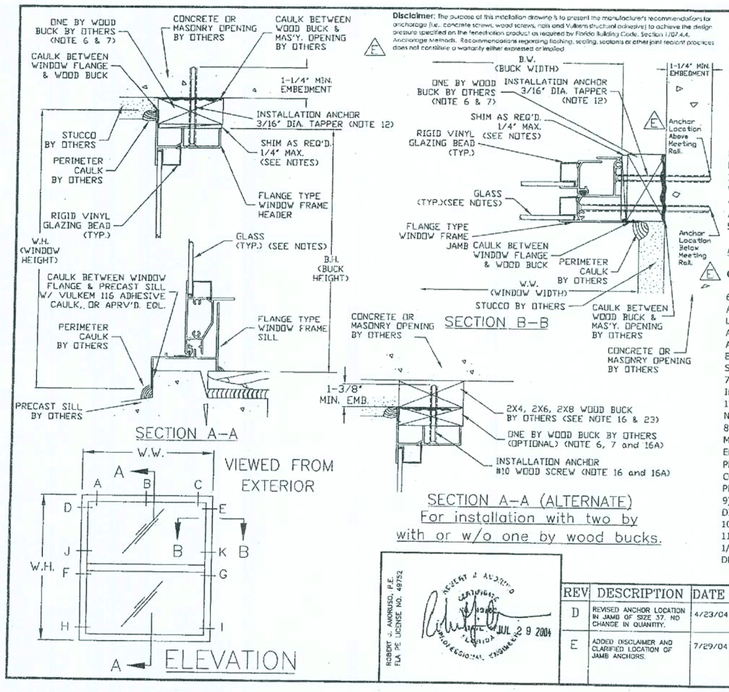

IMPORTANTIFORMATION & GENERAL NOTES

These notes are ṗided to ensure proper installation of Florida Extruders Milestone products and mue followed fully.

GENERAL INSTALTION INSTRUCTIONS

1) SHIM AS REQ'ET EACH INSTALLATION ANCHOR WITH LOAD BEARING SHIM. MAX. ALLOWABLE SHITACK TO BE 1/4".
2) USE SILICONI2 ACRYLIC CAULK BEHIND WINDOW FLANGE AT HEAD & JAMBS. SILL MUST BE ATCHED TO THE SUBSTRATE WITH VULKEM 116 ADHESIVE CAULK OR APPROVED EQUAPPLICATION OF VULKEM 116 ADHESIVE CAULK OR APPROVED EQUAL AT FRAMELL MUST COMPLY WITH SEALANT MANUFACTURER'S RECOMMENDATIC.
3) USE SILICONI2 ACRYLIC CAULK FOR PERIMETER SEAL AROUND EXTERIOR OF WINDOW FLANGND TO SEAL HEADS OF INSTALLATION FASTENERS.
4) FLORIDA EXTRERS 1000 SERIES SINGLE HUNG IS SHOWN. THIS PRINT ALSO APPLIES TO THE IRIDA EXTRUDERS 1500 AND 2000 SERIES SINGLE HUNGS.
5) WINDOW FRAMATERIAL: ALUMINUM ALLOY 6063.

ANCHOR INSTALLON INSTRUCTIONS

GENERAL:

6) NAIL ATTACHMT OF NON-STRUCTURAL ONE BY BUCK IS 4" FROM EACH CORNER AND 8" ON CENTE USE A HARDENED "T-NAIL" WITH A 0.097" DIAMETER AND 1 3/8" LENGTH (5/8" EMBMENT), A HARDENED "MASONRY NAIL" WITH A 0.148" DIAMETER AND 1 1/2" LENGT3/4" EMBEDMENT) OR EQUIVALENT. FOR ALTERNATE SECTION A-A/B-B, USE A 0." DIAMETER COMMON WIRE NAIL WITH A 3/4" EMBEDMENT OR EQUIVALENT FORILING NON-STRUCTURAL ONE BY BUCK INTO A TWO BY STRUCTURAL BUC
7) APPLIES TO ALDN-STRUCTURAL BUCKS LESS THAN 1 1/2" THICKNESS. NOT INTENDED TO LIMTO NOMINAL ONE BY WOOD BUCK ONLY. BUCKS GREATER THAN 1" NOMIMAL (3/4" ICK) AND LESS THAN 2" NOMINAL (1 1/2" THICK) WILL REQUIRE NAIL LENGTH SUFIENT TO MEET EMBEDMENT REQUIREMENTS OF NOTE 6.
8) ALL INSTALLATI ANCHORS MUST BE MADE OF CORROSION RESISTANT MATERIALS OR HAA CORROSION RESISTANT COATING APPLIED SUITABLE FOR THE ENVIRONMENT ANDR FRAMING MATERIAL. WHERE ANCHORS ARE USED IN PRESSURE-PRESERTIVE TREATED WOOD, THE WOOD SUPPLIER SHALL BE CONSULTED FOR ROMMENDATION OF ANCHORS COMPATIBLE WITH THE PRESSURE-PRESERTIVE TREATMENT PROCESS USED.
9) ALL FIELD SUPPD HOLES IN THE FRAME (IF REQUIRED) WILL BE 3/16" IN DIAMETER.
10) WOOD SCREWSHALL MEET ANSI B18.6.1 DIMENSIONAL REQUIREMENTS.
11) IF WOOD TENITO SPLIT, PRE-BORE HOLES AS FOLLOWS: #8 WOOD SCREW - 1/8" DIA. PILOT HC& #10 WOOD SCREW - 9/64" DIA. PILOT HOLE (NATIONAL DESIGN SPECIFICAN FOR WOOD CONSTRUCTION).

[SEE SHEET 2 FOR CONTINUATION OF NOTES]

REV	DESCRIPTION	DATE	INI
D	REVISED ANCHOR LOCATION IN JAMB OF SIZE 37. NO CHANGE IN QUANTITY.	4/23/04	RJA
E	ADDED DISCLAIMER AND CLARIFIED LOCATION OF JAMB ANCHORS.	7/29/04	RJA

FLOIDA EXTRUDERS INTERNATIONAL, INC.
2540 JEWETT LANE
SANFORD, FLORIDA
CERTIFICATF AUTHORIZATION NO. 9235
TITLE: ITALLATION DETAIL
SGL. HG FLANGE WINDOWS - SERIES 1000, 1500 & 2000
DRAWN : BB
APPROVED BY:RJA
DATE: 7/9/04
SCALE: NTS
DWG.: FLEX0016, SHT 1 OF 2

CALL SIZE	BUCK SIZE	LOCATIONS IN HEAD		LOCATIONS IN JAMB	
		30PSF TO 40PSF	41PSF TO 70PSF	30PSF TO 40PSF	41PSF TO 70PSF
12	18 1/8 X 25	B	B	F,G	F,G
13	18 1/8 X 37 3/8	B	B	F,G	F,G
14	18 1/8 X 49 5/8	B	B	F,G	F,G
145	18 1/8 X 55 1/4	B	B	F,G	F,G
15	18 1/8 X 62	B	B	F,G	F,G
16	18 1/8 X 71	B	B	F,G	F,G,H,I
17	18 1/8 X 83	B	B	F,G	F,G,J,K
1H2	25 1/2 X 25	B	B	F,G	F,G
1H3	25 1/2 X 37 3/8	B	B	F,G	F,G
1H4	25 1/2 X 49 5/8	B	B	F,G	F,G,H,I
1H45	25 1/2 X 55 1/4	B	B	F,G	F,G,H,I
1H5	25 1/2 X 62	B	B	F,G	F,G,H,I
1H6	25 1/2 X 71	B	B	F,G	F,G,H,I
1H7	25 1/2 X 83	B	B	F,G,J,K	F,G,J,K
30 1/2 X 26	29 1/2 X 25	B	B	F,G	F,G
30 1/2 X 38 3/8	29 1/2 X 37 3/8	B	B	F,G	F,G
30 1/2 X 50 5/8	29 1/2 X 49 5/8	B	B	F,G	F,G,H,I
30 1/2 X 56 1/4	29 1/2 X 55 1/4	B	B	F,G	F,G,H,I
30 1/2 X 63	29 1/2 X 62	B	B	F,G	F,G,H,I
30 1/2 X 72	29 1/2 X 71	B	B	F,G,H,I	F,G,H,I
30 1/2 X 84	29 1/2 X 83	B	B	F,G,J,K	F,G,J,K
22	36 x 25	B	B	F,G	F,G
23	36 x 37 3/8	B	B	F,G	F,G
24	36 x 49 5/8	B	B	F,G	F,G,H,I
245	36 x 55 1/4	B	B	F,G	F,G,H,I
25	36 x 62	B	B	F,G,H,I	F,G,H,I
26	36 x 71	B	B	F,G,H,I	D,E,F,G,H,I
27	36 x 83	B	B	F,G,J,K	F,G,H,I,J,K
42 x 26	41 x 25	B	B	F,G	F,G
42 x 38 3/8	41 x 37 3/8	B	B	F,G	F,G,H,I
42 x 50 5/8	41 x 49 5/8	B	B	F,G	F,G,H,I
42 x 56 1/4	41 x 55 1/4	B	B	F,G,H,I	F,G,H,I
42 x 63	41 x 62	B	B	F,G,H,I	D,E,F,G,H,I
42 x 72	41 x 71	B	B	F,G,H,I	D,E,F,G,H,I
42 x 84	41 x 83	B	B	F,G,J,K	F,G,H,I,J,K
48 x 26	47 x 25	B	A,C	F,G	F,G
48 x 38 3/8	47 x 37 3/8	B	A,C	F,G	F,G,H,I
48 x 50 5/8	47 x 49 5/8	B	A,C	F,G	F,G,H,I
48 x 56 1/4	47 x 55 1/4	B	A,C	F,G,H,I	F,G,H,I
48 x 63	47 x 62	B	A,C	F,G,H,I	D,E,F,G,H,I
48 x 72	47 x 71	B	A,C	F,G,H,I	D,E,F,G,H,I
48 x 84	47 x 83	B	A,C	F,G,J,K	D,E,F,G,H,I,J,K
32	52 1/8 X 25	B	A,C	F,G	F,G
33	52 1/8 X 37 3/8	B	A,C	F,G	F,G,H,I
34	52 1/8 X 49 5/8	B	A,C	F,G,H,I	F,G,H,I
345	52 1/8 X 55 1/4	B	A,C	F,G,H,I	D,E,F,G,H,I
35	52 1/8 X 62	B	A,C	F,G,H,I	D,E,F,G,H,I
36	52 1/8 X 71	B	A,C	F,G,H,I	D,E,F,G,H,I
* 37	52 1/8 X 83	B	A,C	F,G,J,K	D,E,F,G,H,I,J,K

TAPPER LOCATION CHART

* 37 SIZE NOT AVAILABLE IN 1000 OR 1500 SERIES.

IMPORTANT INFORMATION & GENERAL NOTES (cont.)

ANCHOR INSTALLATION INSTRUCTIONS (cont.)

3/16" DIA. TAPPER CONCRETE SCREW (WITH NON-STRUCTURAL ONE BY WOOD BUCK):

12) WHERE WINDOW IS INSTALLED IN MASONRY OPENING WITH A NON-STRUCTURAL ONE BY WOOD BUCK (NOTE 7), USE A 3/16" DIA. TAPPER CONCRETE SCREW OF SUFFICIENT LTH. TO ACHIEVE MIN. EMBEDMENT OF 1-1/4" INTO MASONRY OR CONCRETE.
13) SEE THIS SHEET FOR TAPPER INSTALLATION ANCHOR LOCATION CHART. LETTER DESIGNATIONS ON THE TAPPER LOCATION CHART INDICATE WHERE TAPPER CONCRETE SCREWS ARE TO BE INSTALLED WHEN USING THE EXTERIOR ELEVATION AS A KEY.
14) TAPPER (RAWL) CONCRETE SCREW MANUFACTURED BY POWERS FASTENING, INC. WILL BE USED. TAPCON (by ELCO TEXTRON INC.) OR TITEN (by SIMPSON STRONG-TIE) CAN BE SUBSTITUTED WITH THE FOLLOWING LIMITATIONS FOR THE SINGLE HUNG WINDOW SIZES (1) 18 1/8 x 62 AND (2) 30 1/2 x 84:
a) LIMIT TO 65 PSF, OR
b) INSTALL ONE ADDITIONAL FASTENER IN EACH JAMB OVER CHART REQUIREMENTS AT LOCATIONS H AND I.
15) ALL REMAINING FACTORY APPLIED INSTALLATION FASTENER HOLES NOT USED FOR TAPPER CONCRETE SCREW INSTALLATION SHOULD BE FILLED WITH #8 WOOD SCREWS OF SUFFICIENT LTH. TO PROVIDE MIN. 5/8 IN. EMBEDMENT INTO WOOD BUCK.

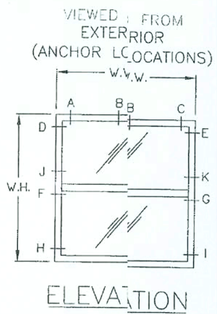

#10 WOOD SCREW (WITH STRUCTURAL TWO BY WOOD BUCK AND OPTIONAL ONE BY WOOD BUCK - SECTION A-A ALTERNATE ILLUSTRATES THIS OPTION, SIMILAR FOR SECTION B-B):

16) WHERE WINDOW IS INSTALLED IN MASONRY OPENING WITH A STRUCTUAL TWO BY WOOD BUCK, USE #10 WOOD SCREWS (ANSI B18.6.1) OF SUFFICIENT LENGTH TO ACHIEVE 1-3/8" MIN. EMBEDMENT INTO THE TWO BY WOOD BUCK.
16A) IF A TWO BY & ONE BY WOOD BUCK ARE USED (SEE SECTION A-A ALTERNATE, SIMILAR FOR SECTION B-B), THEN #10 WOOD SCREWS OF SUFFICIENT LENGTH TO ACHIEVE 1-3/8" MIN. EMBEDMENT INTO THE TWO BY WOOD BUCK WILL BE USED AND THE ONE BY WOOD BUCK WILL BE SECURED TO THE TWO BY WOOD BUCK AS REQUIRED IN NOTE 6 & 7.
17) #10 WOOD SCREWS SHALL BE INSTALLED AT ALL FACTORY APPLIED INSTALLATION FASTENER HOLE LOCATIONS.
18) WOOD SCREWS SHALL NOT BE USED TO FASTEN ASSEMBLY INTO THE END GRAIN OF WOOD.

DESIGN PRESSURE RATING & FBC REQUIREMENTS

19) IF EXACT WINDOW SIZE IS NOT LISTED IN TAPPER ANCHOR CHART FOR NON-STRUCTURAL BUCK INSTALLATION, USE ANCHOR QUANTITY LISTED FOR NEXT LARGER SIZE, FOR THE APPROPRIATE DESIGN PRESSURE REQ'D.
20) INSTALLATIONS DEPICTED IN THESE INSTRUCTIONS ACCEPTABLE FOR DESIGN PRESSURES TO 70 PSF FOR THE WINDOW SIZES SHOWN IN THE CHART. DESIGN PRESSURES (D.P.) SHOWN ARE POSITIVE AND NEGATIVE.
21) GLASS THICKNESS MAY VARY PER THE REQUIREMENTS OF ASTM E1300 GLASS CHARTS.
22) COMPLIES WITH FBC, CHAPTER 17 SECTIONS 1707.4.4.1 FOR ANCHORING REQUIREMENTS, 1707.4.4.2 FOR MASONRY, CONCRETE OR OTHER STRUCTURAL SUBSTRATES AND 1707.4.4.3 FOR WOOD OR APPROVED FRAMING MEMBERS, MARCH 1, 2002.
23) TWO BY WOOD BUCK AND/OR FRAMING AT THE HEAD AND JAMBS TO BE SECURELY FASTENED TO TRANSFER THE LOAD TO THE MASONRY, CONCRETE OR OTHER STRUCTURAL SUBSTRATE PER FBC, SECTION 1707.4.4.2 AND THE ENGINEER OF RECORD'S DETAILS.

REV
B
C
D
E

FLORIDA EXTRUDERS INTERNATIONAL, INC.
2540 JEWETT LANE
SANFORD, FLORIDA
CERTIFICATE OF AUTHORIZATION NO. 9235
TITLE: INSTALLATION DETAIL
SGL. HUNG FLANGE WINDOWS - SERIES 1000 , 1500 & 2000
DRAWN BY: RJA
APPROVED BY:RJA
DATE: 7/29/04
SCALE: NTS
DWG.:FLEX0016, SHT 2 OF 2

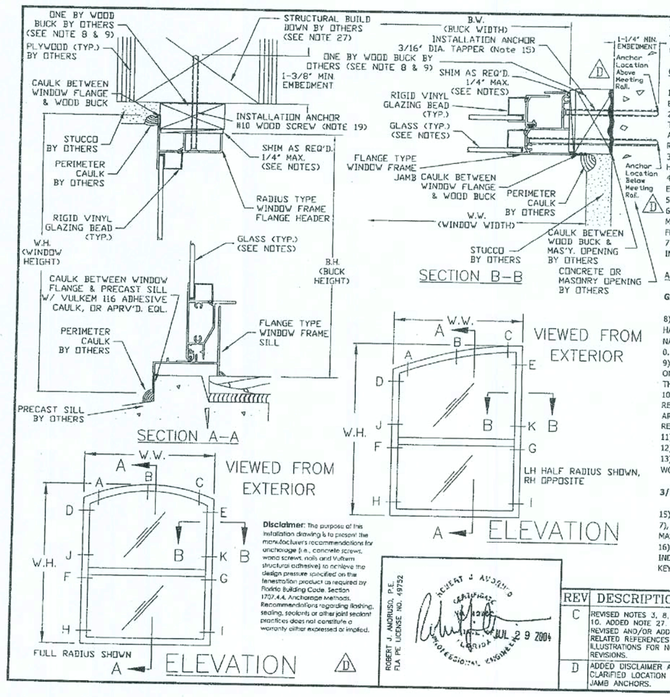

Disclaimer: The purpose of this installation drawing is to present the manufacturer's recommendations for anchorage (i.e., concrete screws, wood screws, nails and Vulkem structural adhesive) to achieve the design pressure specified on the fenestration product as required by Florida Building Code, Section 1707.4.4. Anchorage methods. Recommendations regarding flashing, sealing, sealants or other joint sealant practices does not constitute a warranty either expressed or implied.

IMPORTANT INFORMATN & GENERAL NOTES

These notes are provided to ensure ṗer installation of Florida Extruders Milestone products and must be followed fully.

GENERAL INSTALLATION INSTRUCTB

1) SHIM AS REQ'D. AT EACH INSTALIION ANCHOR WITH LOAD BEARING SHIM. MAX. ALLOWABLE SHIM STACK TO BE 1/4".
2) USE SILICONIZED ACRYLIC CAULKHIND WINDOW FLANGE AT HEAD & JAMBS. SILL MUST BE ATTACHED TO THE SUBSTRATE WITH VULKEM 116 IESIVE CAULK OR APPROVED EQUAL. APPLICATION OF VULKEM 116 ADHESIVE CAULK OR APPROVED EQLAT FRAME SILL MUST COMPLY WITH SEALANT MANUFACTURER'S RECOMMENDATIONS.
3) USE SILICONIZED ACRYLIC CAULKR PERIMETER SEAL AROUND EXTERIOR OF WINDOW FLANGE AND TO SEAL HEADS OF INSTALLATION FASTENER:
4) FLORIDA EXTRUDERS 1000 SERIENGLE HUNG IS SHOWN. THIS PRINT ALSO APPLIES TO THE FLORIDA EXTRUDERS 1500 AND 2000 SERIES SLE HUNGS.
5) WINDOW FRAME MATERIAL: ALUMM ALLOY 6063.
6) BUILD DOWN AROUND CURVED PIION OF WINDOW FRAME TO BE ENGINEERED BY OTHERS. BUILD DOWN MUST BE OF SUFFICIENT STRENGTH ADEQUATELY TRANSFER LOAD FROM WINDOW TO THE STRUCTURE PER FBC, SECTION 1707.4.4.
7) WINDOW UNIT CAN BE MULLED TTHER UNITS USING ALUMINUM TUBE MULLION. SEE MULLION INSTALLATION SHEETS FOR REQUIRNTS.

ANCHOR INSTALLATION INSTRUCTIO

GENERAL:

8) NAIL ATTACHMENT OF NON-STRUCAL ONE BY BUCK IS 4" FROM EACH CORNER AND 8" ON CENTER. USE A HARDENED "T-NAIL" WITH A 0.097" DIETER AND 1 3/8" LENGTH (5/8" EMBEDMENT), A HARDENED "MASONRY NAIL" WITH A 0.148" DIAMETER AND 2" LENGTH (3/4" EMBEDMENT) OR EQUIVALENT FOR THE JAMBS. USE A 0.113" DIAMETER COMMON WIRE NAITH A 3/4" EMBEDMENT OR EQUIVALENT FOR THE HEAD.
9) APPLIES TO ALL NON-STRUCTURALCKS LESS THAN 1 1/2" THICKNESS. NOT INTENDED TO LIMIT TO NOMINAL ONE BY WOOD BUCK ONLY. BUCKS GRTER THAN 1" NOMIMAL (3/4" THICK) AND LESS THAN 2" NOMINAL (1 1/2" THICK) WILL REQUIRE NAIL LENGTH FICIENT TO MEET EMBEDMENT REQUIREMENTS OF NOTE 8.
10) ALL INSTALLATION ANCHORS MUSE MADE OF CORROSION RESISTANT MATERIALS OR HAVE A CORROSION RESISTANT COATING APPLIED SUITABFOR THE ENVIRONMENT AND/OR FRAMING MATERIAL. WHERE ANCHORS ARE USED IN PRESSURE-PRESERVATIVREATED WOOD, THE WOOD SUPPLIER SHALL BE CONSULTED FOR RECOMMENDATION OF ANCHORS COMTIBLE WITH THE PRESSURE-PRESERVATIVE TREATMENT PROCESS USED.
11) ALL FIELD SUPPLIED HOLES IN THRAME (IF REQUIRED) WILL BE 3/16" IN DIAMETER.
12) WOOD SCREWS SHALL MEET ANSI3.6.1 DIMENSIONAL REQUIREMENTS.
13) IF WOOD TENDS TO SPLIT, PRE-B: HOLES AS FOLLOWS: #8 WOOD SCREW - 1/8" DIA. PILOT HOLE & #10 WOOD SCREW - 9/64" DIA. PILOT HOLATIONAL DESIGN SPECIFICATION FOR WOOD CONSTRUCTION).

3/16" DIA. TAPPER CONCRETE SCN (WITH NON-STRUCTURAL ONE BY WOOD BUCK):

15) WHERE WINDOW IS INSTALLED INSONRY OPENING WITH A NON-STRUCTURAL ONE BY WOOD BUCK (NOTE 7), USE A 3/16" DIA. TAPPER CONCRETCREW OF SUFFICIENT LTH. TO ACHIEVE MIN. EMBEDMENT OF 1-1/4" INTO MASONRY OR CONCRETE.
16) SEE SHEET 2 FOR INSTALLATION AIOR LOCATION CHART. LETTER DESIGNATIONS ON THE LOCATION CHART INDICATE WHERE TAPPER CONCRETE EWS ARE TO BE INSTALLED WHEN USING THE EXTERIOR ELEVATION AS A KEY.

[SEE SHEET 2 FOR CONTINUATION OF NOTES]

REV	DESCRIPTION	DATE	INI
C	REVISED NOTES 3, 8, 9 & 10. ADDED NOTE 27. REVISED AND/OR ADDED RELATED REFERENCES AND ILLUSTRATIONS FOR NOTE REVISIONS.	12/19/03	RJA
D	ADDED DISCLAIMER AND CLARIFIED LOCATION OF JAMB ANCHORS.	7/29/04	RJA

FLOIDA EXTRUDERS INTERNATIONAL, INC.
2540 JEWETT LANE
SANFORD, FLORIDA
CERTIFICATE AUTHORIZATION NO. 9235
TITLE: IFALLATION DETAIL SINGLE HUNG RADIUS HEAD
FLANGE/FRAME BUILD DOWN - SERIES 1000 , 1500 & 2000
DRAWN : JBH
APPROVED BY: RJA
DATE: 7/?04
SCALE: NTS
DWG.: FLEX0040 SHEET 1 OF 2

CALL SIZE	BUCK SIZE	LOCATIONS IN HEAD (see note 1 below)		LOCATIONS IN JAMB (see notes 2 & 3 below)	
		30PSF TO 40PSF	41PSF TO 70PSF	30PSF TO 40PSF	41PSF TO 70PSF
12	18 1/8 X 27 5/16	A,C	A,C	F,G	F,G
13	18 1/8 X 39 11/16	A,C	A,C	F,G	F,G
14	18 1/8 X 51 15/16	A,C	A,C	F,G	F,G
145	18 1/8 X 57 19/32	A,C	A,C	F,G	F,G (a)
15	18 1/8 X 64 5/16	A,C	A,C	F,G	F,G (a)
16	18 1/8 X 73 5/16	A,C	A,C	F,G (a)	F,G,H,I
1H2	25 1/2 X 28 9/16	A,C	A,C	F,G	F,G
1H3	25 1/2 X 40 15/16	A,C	A,C	F,G	F,G
1H4	25 1/2 X 53 3/16	A,C	A,C	F,G	F,G,H,I
1H45	25 1/2 X 58 13/16	A,C	A,C	F,G	F,G,H,I
1H5	25 1/2 X 65 9/16	A,C	A,C	F,G	F,G,H,I
1H6	25 1/2 X 74 9/16	A,C	A,C	F,G	F,G,H,I
30 1/2 X 30 7/32	29 1/2 X 29 7/32	A,C	A,C	F,G	F,G
30 1/2 X 42 19/32	29 1/2 X 41 19/32	A,C	A,C	F,G	F,G
30 1/2 X 54 27/32	29 1/2 X 53 27/32	A,C	A,C	F,G	F,G,H,I
30 1/2 X 60 15/32	29 1/2 X 59 15/32	A,C	A,C	F,G	F,G,H,I
30 1/2 X 67 7/32	29 1/2 X 66 7/32	A,C	A,C	F,G (a)	F,G,H,I
30 1/2 X 76 7/32	29 1/2 X 75 7/32	A,C	A,C	F,G,H,I	F,G,H,I (b)
22	36 x 30 5/16	A,B,C	A,B,C	F,G	F,G
23	36 x 42 11/16	A,B,C	A,B,C	F,G	F,G (a)
24	36 x 54 15/16	A,B,C	A,B,C	F,G	F,G,H,I
245	36 x 60 9/16	A,B,C	A,B,C	F,G (a)	F,G,H,I
25	36 x 67 5/16	A,B,C	A,B,C	F,G,H,I	F,G,H,I (b)
26	36 x 76 5/16	A,B,C	A,B,C	F,G,H,I	D,E,F,G,H,I
42 x 32 5/32	41 x 31 5/32	A,B,C	A,B,C	F,G	F,G
42 x 44 17/32	41 x 43 17/32	A,B,C	A,B,C	F,G	F,G,H,I
42 x 56 25/32	41 x 55 25/32	A,B,C	A,B,C	F,G	F,G,H,I
42 x 62 3/8	41 x 61 3/8	A,B,C	A,B,C	F,G,H,I	F,G,H,I
42 x 69 5/32	41 x 68 5/32	A,B,C	A,B,C	F,G,H,I	D,E,F,G,H,I
42 x 78 5/32	41 x 77 5/32	A,B,C	A,B,C	F,G,H,I	D,E,F,G,H,I
48 x 33 5/32	47 x 32 5/32	A,B,C	A,B,C	F,G	F,G
48 x 45 17/32	47 x 44 17/32	A,B,C	A,B,C	F,G	F,G,H,I
48 x 57 25/32	47 x 56 25/32	A,B,C	A,B,C	F,G (a)	F,G,H,I
48 x 63 3/8	47 x 62 3/8	A,B,C	A,B,C	F,G,H,I	F,G,H,I (b)
48 x 70 5/32	47 x 69 5/32	A,B,C	A,B,C	F,G,H,I	D,E,F,G,H,I
48 x 79 5/32	47 x 78 5/32	A,B,C	A,B,C	F,G,H,I	D,E,F,G,H,I (c)
32	52 1/8 X 33	A,B,C	A,B,C	F,G	F,G
33	52 1/8 X 45 3/8	A,B,C	A,B,C	F,G	F,G,H,I
34	52 1/8 X 57 5/8	A,B,C	A,B,C	F,G,H,I	F,G,H,I
345	52 1/8 X 63 1/4	A,B,C	A,B,C	F,G,H,I	D,E,F,G,H,I
35	52 1/8 X 70	A,B,C	A,B,C	F,G,H,I	D,E,F,G,H,I
36	52 1/8 X 79	A,B,C	A,B,C	F,G,H,I	D,E,F,G,H,I (c)

ANCHOR LOCATION CHART (SEE NOTES BELOW)

ANCHOR LOCATION CHART NOTES:

1. Locations in HEAD for #10 Wood Screws into structural "two by" wood buck or "one by" wood buck/structural build-down.
2. Locations in JAMB for 3/16" TAPPER Concrete Screws into non-structural buck & concrete or masonry.
3. Locations in JAMB for #10 Wood Screws into structural "two by" buck. Where indicated by (a), (b) or (c) above, additional #10 Wood Screws shall be added at the following locations.
   (a) One additional anchor required in each jamb at locations "H" and "I".
   (b) One additional anchor required in each jamb at locations "D" and "E".
   (c) One additional anchor required in each jamb at locations "J" and "K".
4. Dimensions given are for half radius head units, full radius will be shorter.

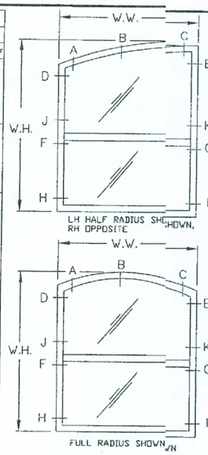

IMPORTANT INFORMATION & GENERAL NOTES (cont.)

ANCHOR INSTALLATION INSTRUCTIONS (cont.)

3/16" DIA. TAPPER CONCRETE SCREW (WITH NON-STRUCTURAL ONE BY WOOD BUCK) (cont.):

17) TAPPER (RAWL) CONCRETE SCREW MANUFACTURED BY POWERS FASTENING, INC. WILL BE USED. TAPCON (by ELCO TEXTRON INC.) OR TITEN (by SIMPSON STRONG-TIE) CAN BE SUBSTITUTED WITH THE FOLLOWING LIMITATIONS FOR THE SINGLE HUNG WINDOW CALL SIZE 15:
a) LIMIT TO 65 PSF, OR
b) INSTALL ONE ADDITIONAL FASTENER IN EACH JAMB OVER CHART REQUIREMENTS AT LOCATIONS H AND I.
18) ALL REMAINING FACTORY APPLIED INSTALLATION FASTENER HOLES NOT USED FOR TAPPER CONCRETE SCREW INSTALLATION SHOULD BE FILLED WITH #8 WOOD SCREWS OF SUFFICIENT LTH. TO PROVIDE MIN. 5/8 IN. EMBEDMENT INTO WOOD BUCK.

#10 WOOD SCREW (WITH STRUCTURAL TWO BY WOOD BUCK OR ONE BY WOOD BUCK/STRUCTURAL BUILD-DOWN):

19) WHERE WINDOW IS INSTALLED IN MASONRY OPENING WITH A STRUCTUAL TWO BY WOOD BUCK OR ONE BY WOOD BUCK/STRUCTURAL BUILD-DOWN, USE #10 WOOD SCREWS (ANSI B18.6.1) OF SUFFICIENT LENGTH TO ACHIEVE 1-3/8" MIN. EMBEDMENT INTO THE TWO BY WOOD BUCK OR THE STRUCTURAL BUILD-DOWN FRAMING COMPONENT.
20) SEE SHEET 2 FOR INSTALLATION ANCHOR LOCATION CHART. LETTER DESIGNATIONS ON THE LOCATION CHART INDICATE WHERE #10 WOOD SCREWS ARE TO BE INSTALLED WHEN USING THE EXTERIOR ELEVATION AS A KEY. ALSO SEE "ANCHOR LOCATION CHART NOTES", NOTE 3, FOR WINDOW SIZES REQUIRING ADDITIONAL ANCHORS AND LOCATIONS.
21) #10 WOOD SCREWS SHALL NOT BE USED TO FASTEN ASSEMBLY INTO THE END GRAIN OF WOOD.
22) ALL REMAINING FACTORY APPLIED INSTALLATION FASTENER HOLES NOT USED FOR #10 WOOD SCREW INSTALLATION SHOULD BE FILLED WITH #8 WOOD SCREWS OF SUFFICIENT LTH. TO PROVIDE MIN. 5/8 IN. EMBEDMENT INTO WOOD BUCK.

DESIGN PRESSURE RATING & FBC REQUIREMENTS

23) IF EXACT WINDOW SIZE IS NOT LISTED IN ANCHOR LOCATION CHART, USE ANCHOR QUANTITY LISTED FOR NEXT LARGER SIZE, FOR THE APPROPRIATE DESIGN PRESSURE REQ'D.
24) INSTALLATIONS DEPICTED IN THESE INSTRUCTIONS ACCEPTABLE FOR DESIGN PRESSURES TO 70 PSF FOR THE WINDOW SIZES SHOWN IN THE CHART. DESIGN PRESSURES (D.P.) SHOWN ARE POSITIVE AND NEGATIVE.
25) GLASS THICKNESS MAY VARY PER THE REQUIREMENTS OF ASTM E1300 GLASS CHARTS.
26) COMPLIES WITH CHAPTER 17 SECTIONS 1707.4.4.1 FOR ANCHORING REQUIREMENTS, 1707.4.4.2 FOR MASONRY, CONCRETE OR OTHER STRUCTURAL SUBSTRATES AND 1707.4.4.3 FOR WOOD OR APPROVED FRAMING MEMBERS, MARCH 1, 2002.
27) STRUCTURAL BUILD-DOWN AT THE HEAD TO BE DESIGN TO TRANSFER THE LOAD TO THE MASONRY, CONCRETE OR OTHER STRUCTURAL SUBSTRATE PER FBC, SECTION 1707.4.4.2 OR TO THE WOOD OR APPROVED FRAMING MEMBERS PER FBC, SECTION 1707.4.4.3AND THE ENGINEER OF RECORD'S DETAILS.

REV
B
C
D

FLORIDA EXTRUDERS INTERNATIONAL, INC.
2540 JEWETT LANE
SANFORD, FLORIDA
CERTIFICATE OF AUTHORIZATION NO. 9235
TITLE: INSTALLATION DETAIL SINGLE HUNG RADIUS HEAD
FLANGE W/FRAME BUILD DOWN - SERIES 1000 , 1500 & 2000
DRAWN BY: RJA
APPROVED BY: RJA
DATE: 7/29/04
SCALE: NTS
DWG.: FLEX0040 SHEET 2 OF 2

REVISIONS :

Maronda Homes
(407) 321-0064 4005 MARONDA WAY SANFORD, FLORIDA

FLORIDA EXTRUDERS
WINDOWS IN BLOCK

RELEASE DATE:

o:\f\title_blocks\18x24-1252d.dgn
31 MAR 2006 13:32:09

SHEET:
1 of 3

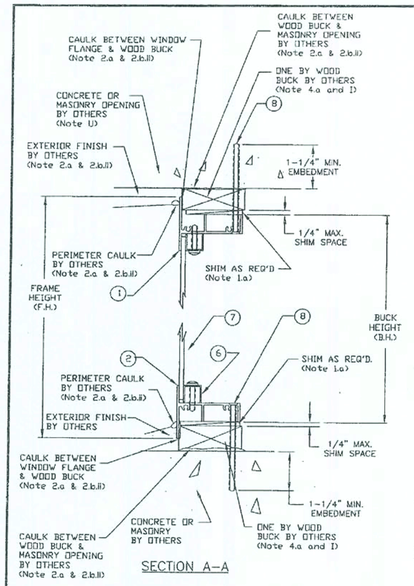

SECTION A–A

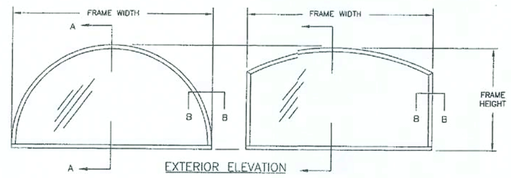

EXTERIOR ELEVATION

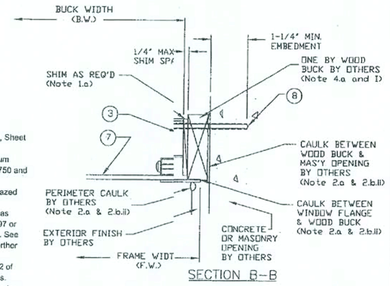

SECTION B–B

GENERAL NOTES

(I to 15) See General Notes Drawing FLEX20100, Sheet 1 & 2.

(A) Milestone Series 1000 Designer Fixed Aluminum Window is shown. Also applicable to Series 1750 and 2000 Designer Fixed Aluminum Windows.

(B) Drawing applicable to Non-Impact Resistant glazed windows.

(C) Production Glazing may differ from that tested as allowed by ANSI/AAMA/NWWDA 101/I.S. 2 - 97 or 101/I.S. 2 NAFS and applicable Building Code. See Note 12 and 13 on Drawing FLEX 20100 for further details.

(D) For Fastener Location & Quantities see Sheet 2 of this drawing. See Note (H) regarding deviations.

(E) Concrete screw edge distance measured from edge of concrete/masonry/block to centerline of concrete screw must meet or exceed 2 1/4". Minimum size and embedment per Parts List. See Note (H) regarding deviations.

(F) Wood or tapping screw edge distance measured from edge of wood to centerline of wood or tapping screw must meet or exceed 1". Minimum size and embedment per Parts List. See Note (H) regarding deviations.

(G) All field supplied holes in the frame (if required) will be 3/16" in diameter for 3/16" concrete screws and #10 wood screws.

(H) Any deviation less than the minimum requirements stated must be approved by the manufacturer or engineered by "other" Design Professional in accordance with the applicable Building Code and Product Approval.

PARTS LIST

1 Head - Flange Frame
2 Sill - Flange Frame
3 Jamb - Flange Frame
4 Not Used
5 Not Used
6 Glazing Bead - Rigid Vir
7 Glazing - See Note (B) a(C)
8 3/16" Dia. Flat Head Corte Screw with minimum working load hear of 255 lbs at 1 1/4" embedment. See h (J) on this drawing and Note 7 on Drawing EX20100.
9 #10 Wood or Tapping Sw with a minimum embedment of 1-3/8" inStructural Two By Buck or Framing". See b (L) on this drawing and Note 8 on Drawing EX20100.

Florida Extruders Int'l., Inc.
2540 Jewett Lane - Sanford, FL 32771
407-323-3300 - 407-323-3507 (fax)
www.floridaextruders.com
Florida COA No. 9235

TITLE: Milestone Series 1000, 1750 and 2000 Non Impact Resistant Aluminum Frame Designer Fixed Window Installation Drawing for Masonry Substrate & Concrete Header

No.	Date	Description
0	12/27/05	UA Supersedes FLEX0035

Date: 12/27/05
Scale: NTS
Drawn By: RJA
Checked By: JH

Robert J. Amoruso, P.E.
FL License No. 49752

Drawing No. FLEX28110
Sheet 1 of 2

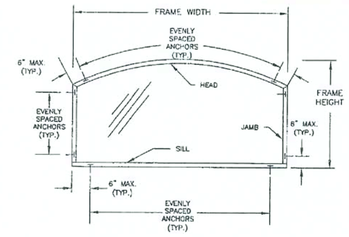

EXTERIOR ELEVATION

FASTENER SPACING ILLUSTRATION
EYEBROW ARCH DESIGNER WINDOW SHOWN AS EXAMPLE

EXAMPLE:

HEAD (CURVED PORTION) SECURED TO CONCRETE HEADER, JAMBS OR SILL SECURED TO CMU AND CAST-SILL RESPECTIVELY WITH ONE BY BUCK

USE 3/16" DIA. CONCRETE SCREWS AT 24" O.C. SPACING BETWEEN ANCHORS AND SPACED 6" MAXIMUM FROM CORNERS.

– or –

HEAD (CURVED PORTION), JAMBS OR SILL SECURED TO STRUCTURAL TWO BY BUCK (ATTACHED TO CONCRETE HEADER, JAMBS OR SILL)

USE #10 WOOD SCREWS AT 12" O.C. SPACING BETWEEN FASTENERS AND SPACED 6" MAXIMUM FROM CORNERS. (NOTE: 12" SPACING FOR EXAMPLE EYEBROW APPLICATION. OTHER APPLICATIONS MAY REQUIRE 10" SPACING PER NOTE (P))

FASTENER INSTALLATION

3/16" DIA. CONCRETE SCR
BUILD-DOWN:

(I) Nail attachment of non-str
(J) Where window is installed
use a 3/16" diameter con
masonry or concrete. See
requirements. See FLEX20
(K) Fastener spacing shall be

#10 WOOD SCREW WITH S
WHEN TWO BY BUCK EMPL

(L) Where window is installed
#10 wood screws of suffic
List" on Sheet 1 of this dr
wood screw requirements
(M) Wood screws shall not be
(N) Fastener spacing shall be

FASTENER SPACING (See E

(O) Concrete screw spacing sh
- 6" maximum from each
- evenly spaced between

(P) #10 wood screw spacing s
- 6" maximum from each
- evenly spaced between
  - eyebrow
  - half-circle arch
  - half-eyebrow
  - octagon
  - fan
  - pentoid
  - full-circle
  - half-circle
  - triangle
  - trapezoid
  - oval
- evenly spaced between
  - quarter-circle
  - quarter-circle arch
  - half-fan

(Q) Spacing in Note (O) and (P
for securing the window fra
- Concrete screw into co
- #10 wood screw into a

(R) If configuration requires co
lower of the maximum spa

DESIGN PRESSURE RATING

(S) Installations depicted in ther
are positive and negative. Over
quantity table and shall be deter
(T) Production Glazing may diffe
NAFS and applicable Building Co
(U) Concrete Header at least an
fastened to transfer the load to
record's details as applicable.
(V) See FLEX20100, Notes 10 to

N INSTRUCTIONS - FLEX28110

CREW WITH NON-STRUCTURAL ONE BY WOOD BUCK AND CONCRETE

structural one by buck per Note 4.a.ii.2 Drawing FLEX20100.
ed in an opening with a non-structural one by wood buck for the head, sill and jambs,
oncrete screw of sufficient length to achieve minimum embedment of 1-1/4" into
ee "Parts List" on Sheet 1 of this drawing for concrete screw size, embedment and load
20100, Note 7 for additional concrete screw requirements.
e per Notes (O), (Q) and (R) below.

STRUCTURAL TWO BY WOOD BUCK AND CONC E BUILD-DOWN. USED
PLOYED IN LIEU OF ONE BY BUCK (THIS CONFIGURATION NOT SHOWN):

ed in an opening with a structural two by wood buck for the head, sill and jambs, use
ficient length to achieve 1-3/8" min. embedment into the two by wood buck. See "Parts
drawing for wood screw size and embedment. See FLEX20100, Note 8 for additional
ts.
se used to fasten assembly into the end grain of wood.
e per Notes (P), (Q) and (R) below.

Elevation View on this Sheet):

shall be as follows:
ch corner of head, sill or jambs, and
en corner anchors but not exceeding 24" o.c. spacing in head, sill or jambs.
g shall be as follows:
ch corner of head, sill or jambs, and
en corner anchors but not exceeding 12" o.c. spacing in head, sill or jambs for the
ons:

(P) above based on the use of either a concrete screw or #10 wood screw as required
frame into the substrate as follows (see illustration this sheet):
concrete or masonry using a non-structural One By Wood Buck.
a Two By Wood Buck structurally attached to concrete or masonry substrate.
combination of concrete screw and #10 wood screw in either a head, sill or jamb, the
pacings above shall be used.

G & FBC CODE COMPLIANCE

hese instructions acceptable for design pressures to 70 PSF. Design Pressures (D.P.)
hall window assembly design pressure may be less than that shown in the fastener
etermined in accordance with Note 13 of FLEX20100.
ffer from that tested as allowed by ANSI/AAMA/NWWDA 101/I.S. 2 - 97 or 101/I.S. 2
Code. See Note 12 and 13 on Drawing FLEX 20100 for further details.
and/or two by wood buck and/or framing at the head, sill and jambs to be securely
to the masonry, concrete or other structural substrate per the FBC and the engineer of
to 15 for additional FBC Code Compliance.

Florida Extruders Int'l., Inc.
2540 Jewett Lane - Sanford, FL 32771
407-323-3300 - 407-323-3507 (fax)
www.floridaextruders.com
Florida COA No. 9235

TITLE: Milestone Series 1000, 1750 and 2000 Non Impact Resistant Aluminum Frame Designer Fixed Window Installation Drawing for Masonry Substrate & Concrete Header

No.	Date	Description
0	12/27/05	UA Supersedes FLEX0035

Date: 12/27/05
Scale: NTS
Drawn By: RJA
Checked By: JH

Drawing No. FLEX28110
Sheet 2 of 2

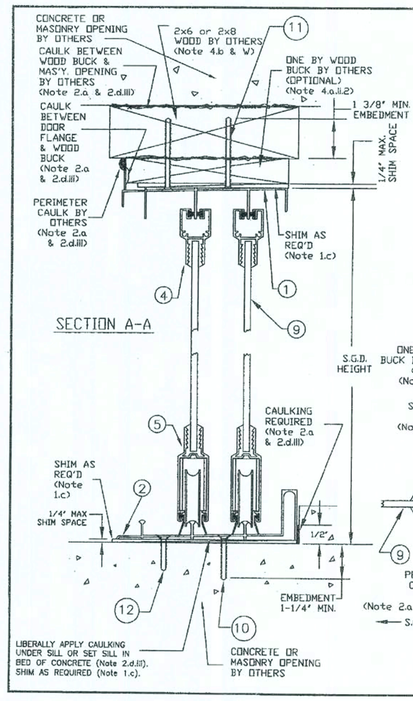

SECTION A–A

PARTS LIST

1 Head - Flange Frame
2 Sill - Flange Frame
3 Jamb - Flange Frame
4 Head - Panel
5 Sill - Panel
6 Lock Stile - Panel
7 Interlock - Panel
8 Hook Strip
9 Glazing - See Note (B) and (V)
10 3/16" Dia. Flat Head Concrete Screw with minimum working load in shear of 255 lbs at 1 1/4" embedment. See Note (K) on this drawing and Note 7 on Drawing FLEX20100.
11 #10 Wood or Tapping Screw with a minimum embedment of 1-3/8" into two by framing. See Note (P) on this drawing and Note 8 on Drawing FLEX20100.
12 #10 Wood or Tapping Screw with Plastic Inserts (Note 8.j on FLEX20100) at a minimum embedment of 1" into the concrete sill. See Note (O) on this drawing and Note 8 on Drawing FLEX20100.
13 #10 Wood or Tapping Screw with a minimum embedment of 7/8" into the "One By Wood Buck". See Note (R) on this drawing and Note 8 on Drawing FLEX20100.

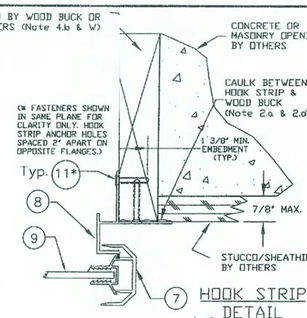

HOOK STRIP DETAIL

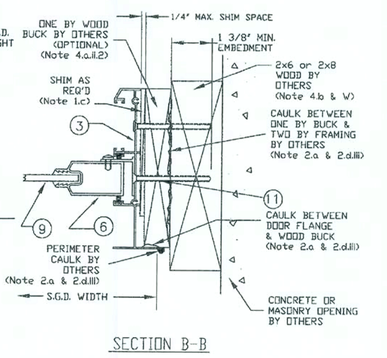

SECTION B–B

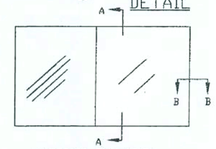

EXTERIOR ELEVATION
2 PANEL DOOR SHOWN
SEE NOTES (C), (D) & (E))

DISCLAIMER: The purpose of this installation drawing is to present the manufacturer's recommendations for anchorage (i.e., concrete screws, wood screws, tapping screws, nails and Vulkem Structural Adhesive (or other approved equal) as applicable) to achieve the design pressure specified on the fenestration product as required by the 2003 Florida Building Code (FBC), Section 1707.4.4, 2004 FBC-Building, Section 1714.5.4 and the 2004 FBC-Residential, Section R613.6. Recommendations regarding flashing, sealing, sealants or other joint sealant practices does not constitute a warranty either expressed or implied.

Robert J. Amoruso, P.E.
FL License No. 49752

Drawing No. FLEX24112
Sheet 1 of 2

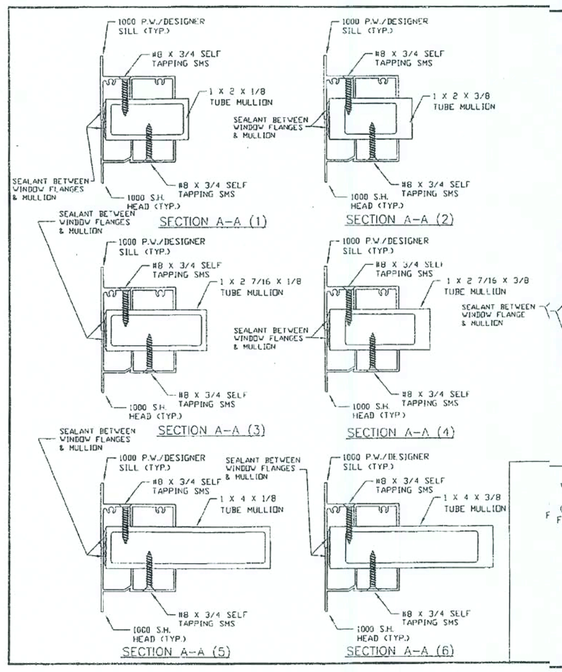

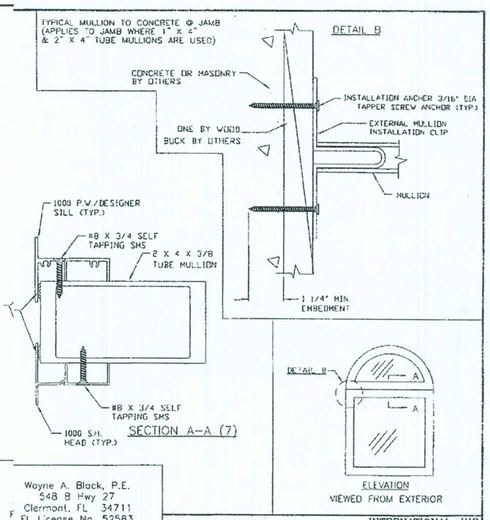

Wayne A. Block, P.E.
548 B Hwy 27
Clermont, FL 34711
FL License No. 52583

FLORIDA EXTRUDERS INTERNATIONAL, INC.
2540 JEWETT LANE
SANFORD, FLORIDA

TITLE: SER. 1000/1500 FLANGE SHEET 1 OF 2
HORIZONTAL MULLION SECTIONS

SEE OTHER SIDE (SHEET 2 OF 2) FOR DESIGN PRESSURE CAPACITIES

DRAWN BY: MSH	APPROVED BY: WAB	
DATE: 6/17/04	SCALE: NTS	DWG.: 1HMFLG

REVISIONS :

Maronda Homes
4005 MARONDA WAY SANFORD, FLORIDA
(407) 321-0064
COPYRIGHT © 2002 MARONDA HOMES

FLORIDA EXTRUDERS
WINDOWS IN BLOCK
RELEASE DATE:
3 MAR 2006

SHEET:
2 of 3

...\title_blocks\18x24-1252d.dgn Mar. 31, 2006 13:32:09

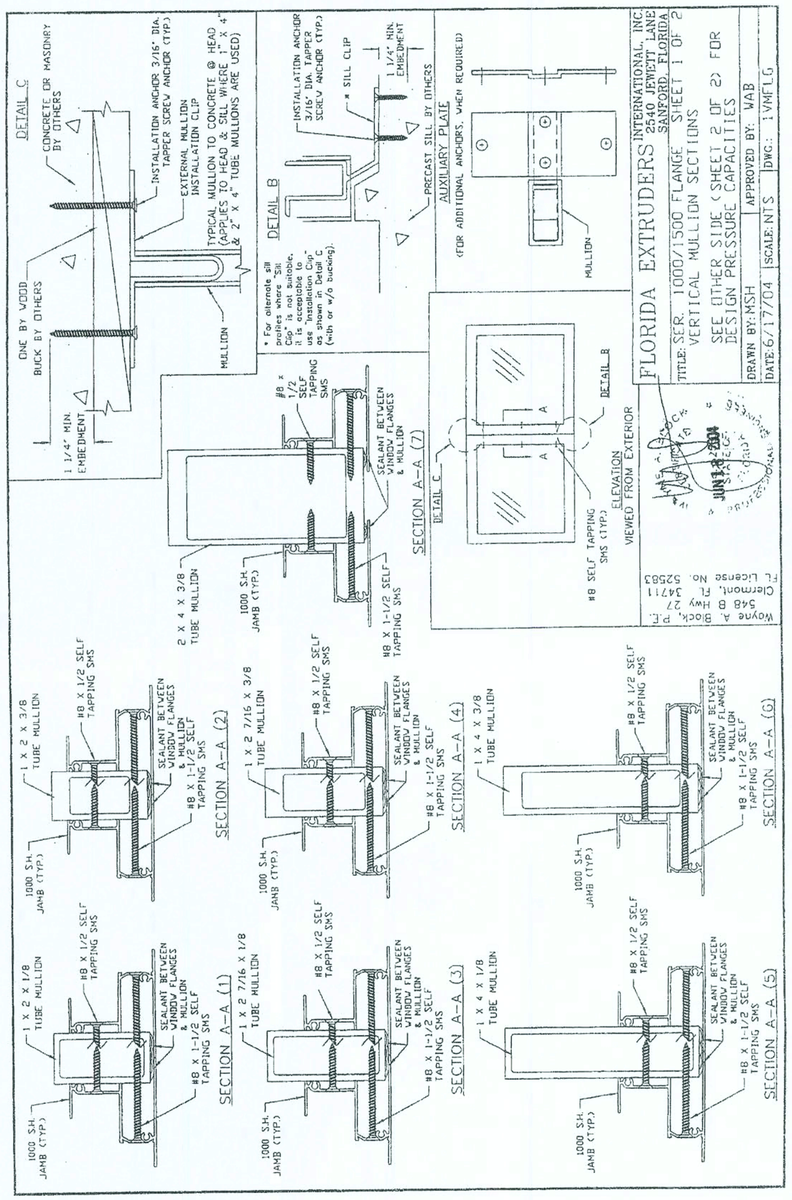

General Notes Drawing for Milestone Series 1000, 1500, 2000 and 3000 Non-Impact Resistant Aluminum Window and Patio Sliding Glass Door Installation Details

These notes are provided to ensure proper installation of Florida Extruders Milestone Non-Impact Resistant Aluminum Fenestration Products and must be followed fully. This General Notes drawing shall be used in tandem with the product specific installation drawing.

A) General Assembly Installation Instructions

1) SHIMMING:

a. FLANGE FRAME WINDOWS - Shim as required at each installation fastener with load bearing shim. The maximum allowable shim stack to be 1/4".
b. FIN FRAME WINDOWS - Shim as required at each installation fastener with load bearing shim. The maximum allowable shim stack to be 1/4". Apply a bead of Vulkem 116 adhesive sealant or approved equal at the fastener location prior to inserting the shim to adhere the shim to the substrate and/or window frame. Full bearing between the shim, substrate and window frame are required.
i. In the case where the nailing option is employed with finned windows, shims can be limited to the location spacing where wood screws are required. It is not mandatory that the shim be coincident with the nail.
c. SLIDING GLASS DOORS - Shim as required at each installation fastener with load bearing shim. The maximum allowable shim stack to be 1/4". Load bearing shim at sill must be pressure treated wood or plastic and must be completely encapsulated in sealant or set in wet concrete.

2) SEALING BETWEEN FENESTRATION PRODUCT AND SUBSTRATE & SGD SEAM SEALANT (See Disclaimer Statement above):

a. GENERAL - SEALANT TYPE (not applicable when a specific brand or type is required)
i. Sealant type shall be chosen based on the sealant manufacturer's recommendation as it relates to materials to be sealed, environmental conditions and intended use.
b. WINDOWS - FLANGE FRAME
i. Adhesive Seal - REQUIRED
1. Use Vulkem 116 adhesive sealant or approved equal between window's integral mounting fin and pre-cast concrete sill (or other sill construction) along full length of sill.
2. Application of Vulkem 116 adhesive sealant or approved equal must comply with sealant manufacturer's recommendations.
ii. Sealant - RECOMMENDED (see Disclaimer)
1. Use sealant behind window flange at head and jambs.
2. Use sealant for perimeter seal around exterior of flange window mounting fin and to seal heads of installation fasteners.
c. WINDOWS - FIN FRAME
i. Adhesive Seal - NOT REQUIRED
ii. Sealant - RECOMMENDED (see Disclaimer)
1. Use sealant behind window flange at head, sill and jambs.
2. Use sealant for perimeter seal around exterior of flange window mounting fin and to seal heads of installation fasteners.
d. SLIDING GLASS DOORS
i. Adhesive Seal - NOT REQUIRED
ii. Mechanically Fastened Corners - REQUIRED
1. Sliding Glass Doors received in "Knocked-Down" condition shall have jamb and sill corners sealed with a small joint seam sealant
iii. Sealant - RECOMMENDED (see Disclaimer)
1. Use sealant behind door flange at head & jambs and behind hook strip
2. Liberally apply sealant under sill or set sill in bed of wet concrete. Seal between back corner of sill riser and concrete. Seal all fastener holes prior to installing fastener and around head after installation.
3. Use sealant for perimeter seal around exterior of door and between hook strip & buck for pocket doors and to seal heads of installation fasteners.

3) MATERIALS:

a. Window and sliding glass door frame material is Aluminum Alloy 6063 T6.
b. Concrete Screws shall meet the minimum requirements of Note 7.
c. Wood Screws shall meet the requirements of Note 8
d. Tapping (i.e., Sheet Metal) Screws when used in lieu of Wood Screws shall meet the requirements of Note 8.
e. Nails shall meet the requirements of Note 9
f. Corrosive Resistance Coatings for installation fasteners shall meet the requirements of Note 5
g. Concrete block or concrete masonry units (CMU) shall meet the requirements of ASTM C90.
h. Concrete shall meet the minimum requirements of the Florida Building Code (minimum compressive strength of 2500 psi).

4) BUCKING:

a. One by (1x) wood bucking:
i. Applies to all non-structural bucks less than 1 1/2" thickness. Not intended to limit to nominal one by wood buck only.
ii. One by wood bucking shall be secured to the substrate (masonry, concrete or structural wood bucking or framing using fasteners suitable for the application.
1. If the product specific installation drawing does prescribe fastening requirements for the bucking, they shall be followed.
2. If the product specific installation drawing does not prescribe fastening requirements for the bucking, fastening must only be sufficient to maintain position of the bucking during window installation.
a. Installer, builder or design professional of record may specify method to secure one by wood bucking to substrate to facilitate window installation.
b. Two by (2x) wood bucking or framing:
i. Applies to all structural wood bucks and/or framing at the head, jamb or sill equal to and greater than 1 1/2" thickness.
ii. They shall be securely fastened to transfer the load to the masonry, concrete or other structural substrate per 2001 FBC, Section 1707.4.4, 2004 FBC Building, Section 1717.5.4 and 2004 FBC-Residential, Section R613.6 and/or the engineer of record's details as applicable.

B) General Fastener Installation Instructions

5) All installation fasteners must be made of corrosion resistant materials or have a corrosion resistant coating applied suitable for the environment and/or framing material. Where fasteners are used in pressure-preservative treated wood, the wood supplier shall be consulted for recommendation of fasteners compatible with the pressure preservative treatment process used.

6) All field supplied holes in the frame (if required) will be as follows.
a. 5/32" diameter for all #8 wood or tapping screws.
b. 3/16" in diameter for all #10 wood or tapping screws and 3/16" diameter or concrete screws.
c. No. 29 size drill bit for 0.1311" shank diameter nails.
d. No. 33 size drill bit for 0.113" shank diameter nails.

7) Concrete Screws (For attachment to masonry or concrete substrate.)

a. Shall be "Flat" head unless otherwise indicated.
b. Shall have a minimum nominal diameter of 3/16" unless otherwise noted.
c. Shall have a minimum embedment of 1 ¼" into the concrete, masonry or concrete block or masonry unit (CMU) receiving the point unless otherwise noted.
d. Shall have an allowable working load in shear as noted on the "Parts List" or on the product specific installation drawing.
i. Working load is defined as the ultimate load determined by test divided by 4 as determined and published by the concrete screw's manufacturer.
ii. If the allowable shear load exceeds the above minimum, required number of fasteners shown on the installation drawings CANNOT be decreased.
iii. If the allowable shear load is less than the above minimum, additional site engineering analysis meeting the building code and acceptable to the Authority Having Jurisdiction (AHJ) WILL BE required.
e. Concrete screws shall be of sufficient length so that the minimum embedment into the receiving substrate (member receiving the point) is met.
f. Minimum Edge Distance of concrete screw fasteners shall be 2 ¼" from the edge of the substrate for a 3/16" diameter concrete screw.

DISCLAIMER

The purpose of this installation drawing is to present the manufacturer's recommendations for anchorage [i.e., concrete screws, wood screws, tapping screws, nails and Vulkem Structural Adhesive (or other approved equal)] to achieve the design pressure specified on the fenestration product as required by the 2001 Florida Building Code (FBC), Section 1707.4.4, 2004 FBC-Building, Section 1714.5.4 and the 2004 FBC-Residential, Section R613.6. Recommendations regarding flashing, sealing sealants or other joint sealant practices does not constitute a warranty either expressed or implied.

NOTE ON PE SEALING

Original drawings with two sheets (pages) are reproduced on one sheet front and back. When reproduced this way, they are sealed on the first (front) sheet only. In response to Robert Amoruso's inquiry to the Florida Board of Professional Engineers, the FBPE at their meeting on June 20, 2002 responded that in such circumstances, it is acceptable for the sealing PE to only sign, date and seal the front sheet of the drawing when printed on the front and back. This was documented by letter to Robert Amoruso dated July 31, 2002 from the Office of the Attorney General, State of Florida.

Robert J. Amoruso, P.E.
FL License No. 49752

ROBERT JAMES AMORUSO LICENSE No. 49752 STATE OF FLORIDA PROFESSIONAL ENGINEER

Drawing No. FLEX20100
Sheet 1 of 2

FASTENER LOCATION TABLE (see Elevation View, Sheet 1)

Series	Size Code	Frame Width and Height			Fastener Screw Location	
		Width	Height (Full Radius)	Height (Half Radius)	Head (No. 10 WS)	Jambs (No. 10 WS or Concrete Screw)
1000/1500/2000	12	19 1/8	26 13/16	28 5/16	A, B, C	D, E, F, G, H, I
1000/1500/2000	13	19 1/8	39 3/16	40 11/16	A, B, C	D, E, F, G, H, I
1000/1500/2000	14	19 1/8	51 7/16	52 15/16	A, B, C	D, E, F, G, H, I
1000/1500/2000	145	19 1/8	57 1/16	58 9/16	A, B, C	D, E, F, G, H, I
1000/1500/2000	15	19 1/8	63 13/16	65 5/16	A, B, C	D, E, F, G, H, I
1000/1500/2000	16	19 1/8	72 13/16	74 5/16	A, B, C	D, E, F, G, H, I, J, K
1000/1500	17	19 1/8	84	84	A, B, C	D, E, F, G, H, I, J, K
2000	17	19 1/8	90	86 5/16	A, B, C	D, E, F, G, H, I, J, K, Y, Z
1000/1500/2000	1H2	26 1/2	27 7/16	29 9/16	A, B, C	D, E, F, G, H, I
1000/1500/2000	1H3	26 1/2	39 13/16	41 15/16	A, B, C	D, E, F, G, H, I
1000/1500/2000	1H4	26 1/2	52 1/16	54 3/16	A, B, C	D, E, F, G, H, I
1000/1500/2000	1H45	26 1/2	57 11/16	59 13/16	A, B, C	D, E, F, G, H, I
1000/1500/2000	1H5	26 1/2	64 7/16	66 9/16	A, B, C	D, E, F, G, H, I
1000/1500/2000	1H6	26 1/2	73 7/16	75 9/16	A, B, C	D, E, F, G, H, I, J, K
1000/1500	1H7	26 1/2	84	84	A, B, C	D, E, F, G, H, I, J, K
2000	1H7	26 1/2	90	87 9/16	A, B, C	D, E, F, G, H, I, J, K, Y, Z
1000/1500/2000	3H2	30 1/2	27 73/96	30 11/48	A, B, C	D, E, F, G, H, I
1000/1500/2000	3H3	30 1/2	40 13/96	42 29/48	A, B, C	D, E, F, G, H, I
1000/1500/2000	3H4	30 1/2	52 37/96	54 41/48	A, B, C	D, E, F, G, H, I
1000/1500/2000	3H45	30 1/2	58 1/96	60 23/48	A, B, C	D, E, F, G, H, I
1000/1500/2000	3H5	30 1/2	64 73/96	67 11/48	A, B, C	D, E, F, G, H, I
1000/1500/2000	3H6	30 1/2	73 73/96	76 11/48	A, B, C	D, E, F, G, H, I, J, K
1000/1500	3H7	30 1/2	84 1/96	83 47/48	A, B, C	D, E, F, G, H, I, J, K
2000	3H7	30 1/2	90 1/96	89 47/48	A, B, C	D, E, F, G, H, I, J, K, Y, Z
1000/1500/2000	22	37	28 5/16	31 5/16	A, B, C	D, E, F, G, H, I
1000/1500/2000	23	37	40 11/16	43 11/16	A, B, C	D, E, F, G, H, I
1000/1500/2000	24	37	52 15/16	55 15/16	A, B, C	D, E, F, G, H, I
1000/1500/2000	245	37	58 9/16	61 9/16	A, B, C	D, E, F, G, H, I
1000/1500/2000	25	37	65 5/16	68 5/16	A, B, C	D, E, F, G, H, I
1000/1500/2000	26	37	74 5/16	77 5/16	A, B, C	D, E, F, G, H, I, J, K
1000/1500	27	37	84	84	A, B, C	D, E, F, G, H, I, J, K
2000	27	37	90	89 5/16	A, B, C	D, E, F, G, H, I, J, K, Y, Z
1000/1500/2000	482	48	29 7/32	33 7/48	A, B, C	D, E, F, G, H, I
1000/1500/2000	483	48	41 19/32	45 25/48	A, B, C	D, E, F, G, H, I
1000/1500/2000	484	48	53 27/32	57 37/48	A, B, C	D, E, F, G, H, I
1000/1500/2000	4845	48	59 15/32	63 19/48	A, B, C	D, E, F, G, H, I
1000/1500/2000	485	48	66 7/32	70 7/48	A, B, C	D, E, F, G, H, I
1000/1500/2000	486	48	75 7/32	79 7/48	A, B, C	D, E, F, G, H, I, J, K
1000/1500	487	48	84	84 1/12	A, B, C	D, E, F, G, H, I, J, K
2000	487	48	90	90 1/12	A, B, C	D, E, F, G, H, I, J, K, Y, Z
1000/1500/2000	32	53 1/8	29 21/32	34	A, B, C	D, E, F, G, H, I
1000/1500/2000	33	53 1/8	42 1/32	46 3/8	A, B, C	D, E, F, G, H, I
1000/1500/2000	34	53 1/8	54 9/32	58 5/8	A, B, C	D, E, F, G, H, I
1000/1500/2000	345	53 1/8	59 29/32	64 1/4	A, B, C	D, E, F, G, H, I
1000/1500/2000	35	53 1/8	66 21/32	71	A, B, C	D, E, F, G, H, I
1000/1500/2000	36	53 1/8	75 21/32	80	A, B, C	D, E, F, G, H, I, J, K
1000/1500	n/a	n/a	n/a	n/a	n/a	n/a
2000	37	53 1/8	90	90	A, B, C	D, E, F, G, H, I, J, K, Y, Z

FASTENER INSTALLATION INSTRUCTIONS - FLEX22110

3/16" DIA. CONCRETE SCREW WITH NON-STRUCTURAL ONE BY WOOD BUCK:

(I) Where window is installed in an opening with a non-structural one by wood buck for the jambs and masonry or concrete sill, installation is as follows:
(1) At the jambs, use a 3/16" diameter concrete screw of sufficient length to achieve minimum embedment of 1-1/4" into masonry or concrete. See "Parts List" on Sheet 1 of this drawing for concrete screw size, embedment and load requirements. See FLEX20100, Note 7 for additional concrete screw requirements.
(2) At the sill, apply a Structural Adhesive Sealant for the full length of the Sill meeting the requirements of Note 2.b.i on FLEX 20100.
(J) See fastener installation table on this sheet for concrete screw locations in jambs and additional installation requirements.

#10 WOOD SCREW WITH (1) STRUCTURAL BUILD-DOWN FOR RADIUS HEAD, (2) OPTIONAL STRUCTURAL TWO BY WOOD BUCK AND (3) OPTIONAL ONE BY WOOD BUCK AT HEAD AND/OR JAMBS (SECTION A-A ALTERNATE ILLUSTRATES THIS OPTION FOR HEAD, SIMILAR FOR SECTION B-B AT JAMB):

(K) Where window is installed in an opening with a (1) structural build-down for radius head, (2) optional structural two by wood buck and (3) optional one by wood buck at head and/or jambs, installation is as follows:
(1) For structural build-down at the head and/or two by wood buck at the head and/or jambs as applicable, use #10 wood screws of sufficient length to achieve 1-3/8" min. embedment into the structural two by wood buck and/or or structural build-down. See "Parts List" on Sheet 1 of this drawing for wood screw size and embedment. See FLEX20100, Note 8 for additional wood screw requirements.
(2) For one by wood buck used in conjunction with a structural two by wood buck at the head and/or jambs as applicable use #10 wood screws of sufficient length to achieve 1-3/8" min. embedment into the two by wood buck. See "Parts List" on Sheet 1 of this drawing for wood screw size and embedment. See FLEX20100, Note 8 for additional wood screw requirements.
(3) At the sill, apply a Structural Adhesive Sealant for the full length of the Sill meeting the requirements of Note 2.b.i on FLEX 20100.
(L) If a two by and one by wood buck are used together (see Section A-A Alternate, similar for Section B-B), then #10 wood screws of sufficient length to achieve 1-3/8" min. embedment into the two by wood buck will be used and the one by wood buck will be secured to the two by wood buck as required in Note 4.a.ii.2 on drawing FLEX20100.
(M) #10 wood screws shall be installed at all factory applied installation fastener hole locations where applicable.
(N) Wood screws shall not be used to fasten assembly into the end grain of wood.

DESIGN PRESSURE RATING & FBC CODE COMPLIANCE

(O) If exact window size is not listed in fastener installation table, use fastener locations listed for next larger size.
(P) Installations depicted in these instructions acceptable for design pressures to 70 PSF for the window sizes shown in the chart. Design Pressures (D.P.) are positive and negative. Overall window assembly design pressure may be less than that shown in the fastener quantity table and shall be determined in accordance with Note 13 of FLEX20100.
(Q) Production Glazing may differ from that tested as allowed by ANSI/AAMA/NWWDA 101/I.S. 2, 101/I.S. 2/NAFS or AAMA/WDMA/CSA 101/I.S. 2/A440 and applicable Building Code. See Note 12 and 13 on Drawing FLEX 20100 for further details.
(R) Structural build-down at head, two by wood buck and/or framing at the head and jambs to be securely fastened to transfer the load to the masonry, concrete or other structural substrate per the FBC and the engineer of record's details as applicable.
(S) See FLEX20100, Notes 10 to 15 for additional FBC Code Compliance.

FASTENER LOCATION TABLE NOTES:
1. This chart and Notes I, J, K.1, L, M and N for use when Radius Head Flange Window is installed in opening with the following attributes:
a. Wood Structural Build-Down at Head, and
b. Masonry/Concrete Substrate and One-By Wood Buck at Jambs.
2. Install Radius Head Flange Window using #10 Wood Screws with a 1-3/8" minimum embedment into the structural wood substrate in accordance with Notes K to N in an opening with the following attributes.
a. Wood Structural Build-Down at Head,
b. Optional Structural Two By Buck is installed at the head or jambs, and
c. Optional One By Wood Buck is installed at the head or jambs.
3. See Note R regarding structural framing requirements.
4. See Sheet 1 for Fastener Location Diagrams.
5. Fasteners Y & Z applicable to Series 2000 Size 37 Only. 3/16" Hole must be drilled in field.

Drawing No. FLEX22110
Sheet 2 of 2

Florida Extruders Int'l., Inc.
2540 Jewett Lane - Sanford, FL 32771
407-323-3300 - 407-322-3507 (fax)
www.floridaextruders.com
Florida COA No. 9235

TITLE: General Notes Drawing for Milestone Series 1000, 1500, 2000 & 3000 Non-Impact Resistant Aluminum Window & Patio Sliding Glass Doors Installation Details

REVISIONS			
No.	Date	By	Description
0	6/6/05	RJA	Original Issue
1	9/26/05	RJA	Editorial Changes
2	12/27/05	RJA	Revised Notes 1, 6, 9 & 12
3	11/14/06	RJA	Revised Notes 2, 7, 8, 9, 11, 12, 13 & 15

Date: 11/14/06
Scale: NTS
Drawn By: RJA
Checked By: JH

Maronda Homes
4005 MARONDA WAY SANFORD, FLORIDA
(407) 321-0064

REVISIONS :

FLORIDA EXTRUDERS
WINDOWS IN BLOCK

RELEASE DATE:

Florida Extruders Int'l., Inc.
2540 Jewett Lane - Sanford, FL 32771
407-323-3300 - 407-322-3507 (fax)
www.floridaextruders.com
Florida COA No. 9235

TITLE: Milestone Series 1000, 1500 & 2000 Non-Impact Resistant Aluminum Fixed Radius Head SH Window Installation Dwg. for Masonry/Wood Substrate with Concrete/Wood Screws

REVISIONS			
No.	Date	By	Description
0	12/27/05	RJA	Supersedes FLEX0040
1	11/14/06	RJA	Revised Anchorage
2	3/02/07	RJA	Editorial Corrections

Date: 3/02/07
Scale: NTS
Drawn By: RJA
Checked By: JH

SHEET: 3 of 3

pVFNTitle_blocks\18x24-1252d.dgn 13:32:09 31 MAR 2006

...\title_blocks\18x24-1252d.dgn Mar. 31, 2006 13:32:09

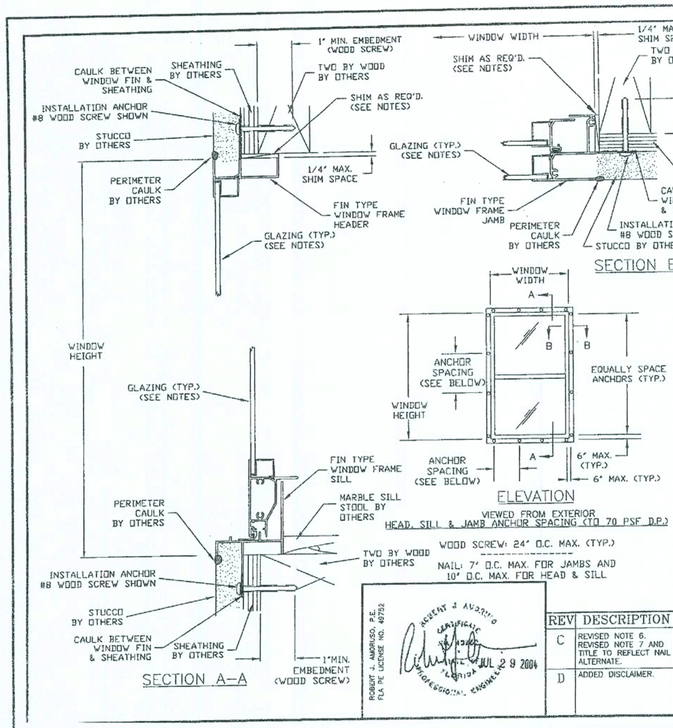

Disclaimer: The purpose of installation drawing is to present the manufacturer's recommendations for anchorage (i.e., wood screw/ nails) to achieve the design pressure specified on the fenestration product as required by Florida Building Code, Section 1709.4.4, Anchorage Methods. Recommendations regarding flashing, sealing, sealants or other joint sealant practices does not constitute a warranty either expressed or implied.

IMPORTANT INFORMATION & GENERAL NOTES

These notes are provided to ensure proper installation of Florida Extruders Milestone products and must be followed fully.

GENERAL INSTALLATION INSTRUCTIONS

1) SHIM AS REQ'D. ATTACH INSTALLATION ANCHOR WITH LOAD BEARING SHIM. MAX. ALLOWABLE SHIMSTACK TO BE 1/4". APPLY A BEAD OF VULKEM 116 ADHESIVE CAULK OR APPROVED EQUAL AT THE FASTENER LOCATION PRIOR TO INSERTING THE SHIM ADHERE THE SHIM TO THE SUBSTRATE AND/OR WINDOW FRAME. FULLEARING BETWEEN THE SHIM, SUBSTRATE AND WINDOW FRAME ARE REQUIRED.
2) USE SILICONIZED ACRLIC CAULK BEHIND WINDOW FIN AT HEAD, SILL & JAMBS.
3) USE SILICONIZED ACRLIC CAULK FOR PERIMETER SEAL AROUND EXTERIOR OF WINDOW FRAME.
4) FLORIDA EXTRUDERS 1000 SERIES SINGLE HUNG IS SHOWN. THIS PRINT ALSO APPLIES TO THE FLORIDA EXTRUDERS 1500 AND 2000 SERIES SINGLE HUNGS.
5) WINDOW FRAME MATRIAL: ALUMINUM ALLOY 6063.

ANCHOR INSTALLATION INSTRUCTIONS

GENERAL:

6) ALL INSTALLATION ANCHORS MUST BINDE OF CORROSION RESISTANT MATERIALS OR HAVE A CORROSION RESISTANT COATING APPLIEUITTABLE FOR THE ENVIRONMENT AND/OR FRAMING MATERIAL. WHERE ANCHORS ARE USED IRESSURE-PRESERVATIVE TREATED WOOD, THE WOOD SUPPLIER SHALL BE CONSULTED FOR REOMENDATION OF ANCHORS COMPATIBLE WITH THE PRESSURE-PRESERVATIVE TREATMENT PIESS USED.
7) ALL FIELD SUPPLIED HOLES IN THE FRE (IF REQUIRED) WILL BE:
a) 3/16" IN DIAMETER FOR #8 WOOD SCREWS, AND
b) THE SHANK DIAMETER OF THE NAIDUNDED UP TO THE NEXT STANDARD DESIGNATION DRILL BIT SIZE.
8) WOOD SCREWS SHALL MEET ANSI B18. DIMENSIONAL REQUIREMENTS.
9) NAILS SHALL MEET ASTM F 1667, "STIARD SPECIFICATION FOR DRIVEN FASTENERS: NAILS, SPIKES, AND STAPLES."
10) IF WOOD TENDS TO SPLIT, PRE-BORDLE AS FOLLOWS (PER NATIONAL DESIGN SPECIFICATION FOR WOOD CONSTRUCTION REQUIREMENTS):
a) #8 WOOD SCREWS - 1/8" DIA. PILOTOLE.
b) 0.113" DIA. NAILS - #44 DRILL SIZLOT HOLE.
c) OTHER NAIL DIAMETER PILOT HOLNOT EXCEEDING 75% OF THE NAIL'S DIAMETER AS REQUIRED.
11) WOOD SCREW AND NAIL WITHDRAW/ALUES USED TO GENERATE FASTENING REQUIREMENTS ARE BASED ON SOUTHERN PINE WITH A CIFIC GRAVITY OF 0.55.
12) WOOD SCREWS AND NAILS SHALL NOE MIXED TO FASTEN THE SAME ASSEMBLY.
13) WOOD SCREWS AND NAILS SHALL NOE USED TO FASTEN ASSEMBLY INTO THE END GRAIN OF WOOD.

[SEE SHEET 2 FOR CONTINUATION OF NS]

ROBERT J. MARONDA, P.E. FLA. PE. LICENSE NO. 49752
JUL 29 2004

REV	DESCRIPTION	DATE	INI
C	REVISED NOTE 6. REVISED NOTE 7 AND TITLE TO REFLECT NAIL ALTERNATE.	12/10/03	RJA
D	ADDED DISCLAIMER.	7/29/04	RJA

FLORIDA EXTRUDERS INTERNATIONAL, INC. 2540 JEWETT LANE SANFORD, FLORIDA
CERTIFICATE OF AUTHORIZATION NO. 9235
TITLE: INSTALLATN DETAIL W/#8 SCREWS OR NAILS
SINGLE HUNGIN WINDOW - SERIES 1000, 1500, & 2000
DRAWN BY: BB | APPROVED BY: RJA
DATE: 7/29/04 | SCALE: N. T. S. | DWG.:FLEX0026 SHT 1 OF 2

#8 WOOD SCREW INSTALLATION ANCHOR CHART			
CALL SIZE	WINDOW SIZE	QUANTITY IN HEAD & SILL	QUANTITY IN EACH JAMB
		UP TO 70 PSF	UP TO 70 PSF
2024	23 1/2 X 27 1/2	2	2
2030	23 1/2 X 35 1/2	2	2
2038	23 1/2 X 43 1/2	2	3
2040	23 1/2 X 47 1/2	2	3
2044	23 1/2 X 51 1/2	2	3
2050	23 1/2 X 59 1/2	2	4
2060	23 1/2 X 71 1/2	2	4
2070	23 1/2 X 83 1/2	2	4
2424	27 1/2 X 27 1/2	2	2
2430	27 1/2 X 35 1/2	2	2
2438	27 1/2 X 43 1/2	2	3
2440	27 1/2 X 47 1/2	2	3
2444	27 1/2 X 51 1/2	2	3
2450	27 1/2 X 59 1/2	2	4
2460	27 1/2 X 71 1/2	2	4
2470	27 1/2 X 83 1/2	2	4
2824	31 1/2 X 27 1/2	2	2
2830	31 1/2 X 35 1/2	2	2
2838	31 1/2 X 43 1/2	2	3
2840	31 1/2 X 47 1/2	2	3
2844	31 1/2 X 51 1/2	2	3
2850	31 1/2 X 59 1/2	2	3
2860	31 1/2 X 71 1/2	2	4
2870	31 1/2 X 83 1/2	2	4
3024	35 1/2 X 27 1/2	2	2
3030	35 1/2 X 35 1/2	2	2
3038	35 1/2 X 43 1/2	2	3
3040	35 1/2 X 47 1/2	2	3
3044	35 1/2 X 51 1/2	2	3
3050	35 1/2 X 59 1/2	2	3
3060	35 1/2 X 71 1/2	2	4
3070	35 1/2 X 83 1/2	2	4
3424	39 1/2 X 27 1/2	3	2
3430	39 1/2 X 35 1/2	3	2
3438	39 1/2 X 43 1/2	3	3
3440	39 1/2 X 47 1/2	3	3
3444	39 1/2 X 51 1/2	3	3
3450	39 1/2 X 59 1/2	3	4
3460	39 1/2 X 71 1/2	3	4
3470	39 1/2 X 83 1/2	3	4
3824	43 1/2 X 27 1/2	3	2
3830	43 1/2 X 35 1/2	3	2
3838	43 1/2 X 43 1/2	3	3
3840	43 1/2 X 47 1/2	3	3
3844	43 1/2 X 51 1/2	3	3
3850	43 1/2 X 59 1/2	3	3
3860	43 1/2 X 71 1/2	3	4
3870	43 1/2 X 83 1/2	3	4
4024	47 1/2 X 27 1/2	3	2
4030	47 1/2 X 35 1/2	3	2
4038	47 1/2 X 43 1/2	3	3
4040	47 1/2 X 47 1/2	3	3
4044	47 1/2 X 51 1/2	3	3
4050	47 1/2 X 59 1/2	3	4
4060	47 1/2 X 71 1/2	3	4
4070	47 1/2 X 83 1/2	3	4

#8 WOOD SCREW INSTALLATION ANCHOR CHART			
CALL SIZE	WINDOW SIZE	QUANTITY IN HEAD & SILL	QUANTITY IN EACH JAMB
		UP TO 70 PSF	UP TO 70 PSF
12	18 1/8 X 25	2	2
13	18 1/8 X 37 3/8	2	3
14	18 1/8 X 49 5/8	2	3
145	18 1/8 X 55 1/4	2	3
15	18 1/8 X 62	2	4
16	18 1/8 X 71	2	4
17	18 1/8 X 83	2	4
1H2	25 1/2 X 25	2	2
1H3	25 1/2 X 37 3/8	2	3
1H4	25 1/2 X 49 5/8	2	3
1H45	25 1/2 X 55 1/4	2	3
1H5	25 1/2 X 62	2	4
1H6	25 1/2 X 71	2	4
1H7	25 1/2 X 83	2	4
30 1/2 x 26	29 1/2 X 25	2	2
30 1/2 x 38 3/8	29 1/2 X 37 3/8	2	3
30 1/2 x 50 5/8	29 1/2 X 49 5/8	2	3
30 1/2 x 56 1/4	29 1/2 X 55 1/4	2	3
30 1/2 x 63	29 1/2 X 62	2	4
30 1/2 x 72	29 1/2 X 71	2	4
30 1/2 x 84	29 1/2 X 83	2	4
22	36 X 25	2	2
23	36 X 37 3/8	2	3
24	36 X 49 5/8	2	3
245	36 X 55 1/4	2	3
25	36 X 62	2	4
26	36 X 71	2	4
27	36 X 83	2	4
42 x 26	41 X 25	3	2
42 x 38 3/8	41 X 37 3/8	3	3
42 x 50 5/8	41 X 49 5/8	3	3
42 x 56 1/4	41 X 55 1/4	3	3
42 x 63	41 X 62	3	4
42 x 72	41 X 71	3	4
42 x 84	41 X 83	3	4
48 x 26	47 X 25	3	2
48 x 38 3/8	47 X 37 3/8	3	3
48 x 50 5/8	47 X 49 5/8	3	3
48 x 56 1/4	47 X 55 1/4	3	3
48 x 63	47 X 62	3	4
48 x 72	47 X 71	3	4
48 x 84	47 X 83	3	4
32	52 1/8 X 25	3	2
33	52 1/8 X 37 3/8	3	3
34	52 1/8 X 49 5/8	3	3
345	52 1/8 X 55 1/4	3	3
35	52 1/8 X 62	3	4
36	52 1/8 X 71	3	4
* 37	52 1/8 X 83	3	4

* 37 SIZE NOT AVAILABLE IN 1000 OR 1500 SERIES

IMPORTANT INFORMATION & GENERAL NOTES (cont.)

ANCHOR INSTALLATION INSTRUCTIONS (cont.)

#8 WOOD SCREWS:

14) SEE THIS SHEET FOR #8 WOOD SCREW INSTALLATION ANCHOR CHART.
15) #8 WOOD SCREW MUST BE OF SUFFICIENT LENGTH TO ACHIEVE MINIMUM EMBEDMENT OF 1" INTO THE TWO BY WOOD FRAMING
16) SPACING OF WOOD SCREWS SHALL BE:
a) 6" FROM EACH CORNER OF THE HEAD, SILL AND JAMBS, AND
b) EVENLY SPACED BETWEEN CORNER ANCHORS BUT NOT EXCEEDING 24" O.C. SPACING IN HEAD, SILL AND JAMBS.

NAILS:

17) NAILS SHALL MEET THE FOLLOWING REQUIREMENTS:
a) 0.113" DIAMETER OR GREATER,
b) SUFFICIENT LENGTH TO ACHIEVE MINIMUM EMBEDMENT OF 1 7/8" INTO THE TWO BY WOOD FRAMING (GENERALLY, NAIL 2 3/8" LENGTH OR GREATER SHALL MEET THIS REQUIREMENT),
c) HELICAL (SCREW) OR ANNULAR (RING) SHANK STYLE ONLY, AND
d) MANUFACTURER SHALL BE LISTED IN NATIONAL EVALUATION SERVICES, INC.'S NATIONAL EVALUATION REPORT, NER-272.
18) MANUFACTURER'S NAILS MEETING THESE REQUIREMENTS ARE (BUT NOT LIMITED TO) THE FOLLOWING:
a) PASLODE DEFORMED SHANK NAIL, NO. 404947, 404537, 650111 AND 650148.
b) DURO-FAST DEFORMED SHANK NAIL NO. 325.
19) SPACING OF NAILS SHALL BE:
a) 6" FROM EACH CORNER OF THE HEAD, SILL AND JAMBS, AND
b) EVENLY SPACED BETWEEN CORNER ANCHORS AND NOT EXCEEDING 7" O.C. SPACING FOR THE JAMBS AND 10" O.C. SPACING FOR THE HEAD AND SILL.

DESIGN PRESSURE RATING & FBC REQUIREMENTS

20) IF EXACT WINDOW SIZE IS NOT LISTED IN WOOD SCREW ANCHOR CHART, USE ANCHOR QUANTITY LISTED FOR NEXT LARGER SIZE.
21) INSTALLATIONS DEPICTED IN THESE INSTRUCTIONS ACCEPTABLE FOR DESIGN PRESSURES TO 70 PSF FOR WINDOW SIZES SHOWN IN CHART WITH SPACINGS SHOWN. DESIGN PRESSURES (D.P.) SHOWN ARE POSITIVE AND NEGATIVE.
22) GLASS THICKNESS MAY VARY PER THE REQUIREMENTS OF ASTM E1300 GLASS CHARTS.
23) COMPLIES WITH CHAPTER 17 SECTIONS 1707.4.4.1 FOR ANCHORING REQUIREMENTS AND 1707.4.4.3 FOR WOOD OR APPROVED FRAMING MEMBERS, MARCH 1,2002.

REV	FLORIDA EXTRUDERS INTERNATIONAL, INC. 2540 JEWETT LANE SANFORD, FLORIDA
A	CERTIFICATE OF AUTHORIZATION NO. 9235
B	TITLE: INSTALLATION DETAIL W/#8 SCREWS OR NAILS
C	SINGLE HUNG FIN WINDOW - SERIES 1000, 1500, & 2000
D	DRAWN BY: BB / APPROVED BY: RJA
	DATE: 7/29/04 / SCALE: NTS / DWG.: FLEX0026 SHT 2 OF 2

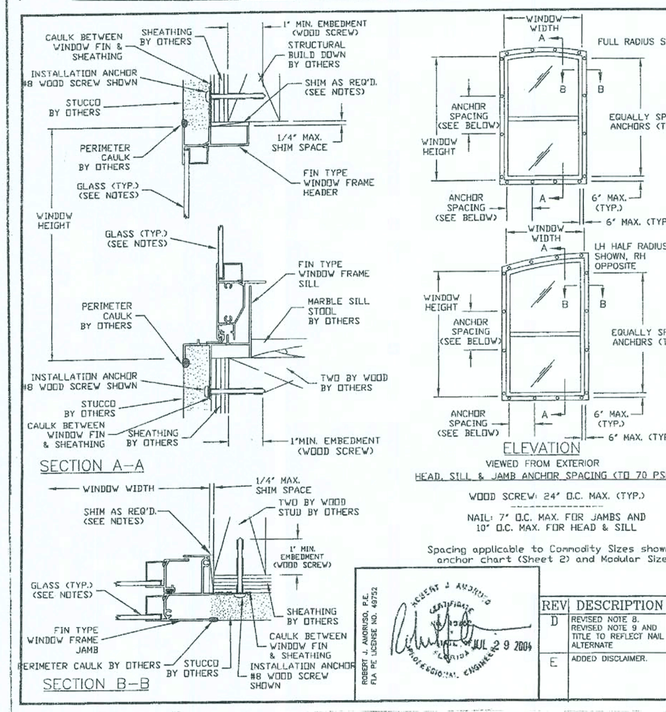

Disclaimer: The purpose of installation drawing is to present the manufacturer's recommendations for anchorage (i.e., wood screws and nails) to achieve the design pressure specified on the fenestration product as required by Florida Building Code, Section 1709.4.4, Anchorage Methods. Recommendations regarding flashing, sealing, sealants or other joint sealant practices does not constitute a warranty either expressed or implied.

IMPORTANT INFORMATION & GENERAL NOTES

These notes are provided to ensure proper installation of Florida Extruders Milestone products and must be followed fully.

GENERAL INSTALLATION INSTRUCTIONS

1) SHIM AS REQ'D. ATTACH INSTALLATION ANCHOR WITH LOAD BEARING SHIM. MAX. ALLOWABLE SHIM STACK TO BE 1/4". APPLY A BEAD OF VULKEM 116 ADHESIVE CAULK OR APPROVED EQUAL AT THE FASTENER LOCATION PRIOR TO INSERTING THE SHIM ADHERE THE SHIM TO THE SUBSTRATE AND/OR WINDOW FRAME. FULL BEARING BETWEEN THE SHIM, SUBSTRATE AND WINDOW FRAME ARE REQUIRED.
2) USE SILICONIZED ACRYLIC CAULK BEHIND WINDOW FIN AT HEAD, SILL & JAMBS.
3) USE SILICONIZED ACRYLIC CAULK FOR PERIMETER SEAL AROUND EXTERIOR OF WINDOW FRAME.
4) FLORIDA EXTRUDERS 1000 SERIES SINGLE HUNG IS SHOWN. THIS PRINT ALSO APPLIES TO THE FLORIDA EXTRUDERS 1500 AND 2000 SERIES SINGLE HUNGS.
5) WINDOW FRAME MATERIAL: ALUMINUM ALLOY 6063.
6) BUILD DOWN AROUND CURVED PORTION OF WINDOW FRAME TO BE ENGINEERED BY OTHERS. BUILD DOWN MUST BE OF SUFFICIENT STRENGTH TO ADEQUATELY TRANSFER LOAD FROM WINDOW TO THE STRUCTURE PER FBC, SECTION 1707.4.4.
7) WINDOW CAN BE MULLED TO OTHER UNITS USING ALUMINUM TUBE MULLION. SEE MULLION INSTALLATION SHEETS FOR REQUIREMENTS.

ANCHOR INSTALLATION INSTRUCTIONS

GENERAL:

8) ALL INSTALLATION ANCHORS MUST BE MADE OF CORROSION RESISTANT MATERIALS OR HAVE A CORROSION RESISTANT COATING AND SUITABLE FOR THE ENVIRONMENT AND/OR FRAMING MATERIAL. WHERE ANCHORS ARE USED IN PRESSURE-PRESERVATIVE TREATED WOOD, THE WOOD SUPPLIER SHALL BE CONSULTED FOR RECOMMENDATION OF ANCHORS COMPATIBLE WITH THE PRESSURE-PRESERVATIVE TREATMENT PROCESS USED.
9) ALL FIELD SUPPLIED HOLES IN THE FRAME (IF REQUIRED) WILL BE:
a) 3/16" IN DIAMETER FOR #8 WOOD SCREWS, AND
b) THE SHANK DIAMETER OF THE NAIL ROUNDED UP TO THE NEXT STANDARD DESIGNATION DRILL BIT SIZE.
10) WOOD SCREWS SHALL MEET ANSI B18.6.1 DIMENSIONAL REQUIREMENTS.
11) NAILS SHALL MEET ASTM F 1667 STANDARD SPECIFICATION FOR DRIVEN FASTENERS: NAILS, SPIKES, AND STAPLES."
12) IF WOOD TENDS TO SPLIT, PRE-DRILL HOLE AS FOLLOWS (PER NATIONAL DESIGN SPECIFICATION FOR WOOD CONSTRUCTION REQUIREMENTS):
a) #8 WOOD SCREWS - 1/8" DIA. PILOT HOLE.
b) 0.113" DIA. NAILS - #44 DRILL PILOT HOLE.
c) OTHER NAIL DIAMETER PILOTLES NOT EXCEEDING 75% OF THE NAIL'S DIAMETER AS REQUIRED.
13) WOOD SCREW AND NAIL WITHDRAWAL VALUES USED TO GENERATE FASTENING REQUIREMENTS ARE BASED ON SOUTHERN PINE WITH SPECIFIC GRAVITY OF 0.55.
14) WOOD SCREWS AND NAILS SHALL BE MIXED TO FASTEN THE SAME ASSEMBLY.
15) WOOD SCREWS AND NAILS SHALL BE USED TO FASTEN ASSEMBLY INTO THE END GRAIN OF WOOD.

[SEE SHEET 2 FOR CONTINUATION NOTES]

ROBERT J. MARONDA, P.E. FLA. PE. LICENSE NO. 49752
JUL 29 2004

REV	DESCRIPTION	DATE	INI
D	REVISED NOTE 8. REVISED NOTE 9 AND TITLE TO REFLECT NAIL ALTERNATE	12/10/03	RJA
E	ADDED DISCLAIMER.	7/29/04	RJA

FLORIDA EXTRUDERS INTERNATIONAL, INC. 2540 JEWETT LANE SANFORD, FLORIDA
CERTIFICATE OF AUTHORIZATION NO. 9235
TITLE: INSTALLATN DETAIL W/#8 SCREWS OR NAILS
SINGLE HUNG RADIUS HEAD FIN - SERIES 1000, 1500, & 2000
DRAWN BY: JBH | APPROVED BY: RJA
DATE: 7/29/04 | SCALE: N. T. S. | DWG.:FLEX0041 SHEET 1 OF 2

#8 WOOD SCREW INSTALLATION ANCHOR CHART			
CALL SIZE	WINDOW SIZE	QUANTITY IN HEAD & SILL	QUANTITY IN EACH JAMB
		UP TO 70 PSF	UP TO 70 PSF
12	18 1/8 X 27 5/16	2	2
13	18 1/8 X 39 11/16	2	3
14	18 1/8 X 51 15/16	2	3
145	18 1/8 X 57 19/32	2	3
15	18 1/8 X 64 5/16	2	4
16	18 1/8 X 73 5/16	2	4
1H2	25 1/2 X 28 9/16	2	2
1H3	25 1/2 X 40 15/16	2	3
1H4	25 1/2 X 53 3/16	2	3
1H45	25 1/2 X 58 13/16	2	3
1H5	25 1/2 X 65 9/16	2	4
1H6	25 1/2 X 74 9/16	2	4
29 1/2 X 29 7/32	29 1/2 X 29 7/32	2	2
29 1/2 X 41 19/32	29 1/2 X 41 19/32	2	3
29 1/2 X 53 27/32	29 1/2 X 53 27/32	2	3
29 1/2 X 59 15/32	29 1/2 X 59 15/32	2	3
29 1/2 X 66 7/32	29 1/2 X 66 7/32	2	4
29 1/2 X 75 7/32	29 1/2 X 75 7/32	2	4
22	36 X 30 5/16	2	2
23	36 X 42 11/16	2	3
24	36 X 54 15/16	2	3
245	36 X 60 9/16	2	4
25	36 X 67 5/16	2	4
26	36 X 76 5/16	2	4
41 X 31 5/32	41 X 31 5/32	3	2
41 X 43 17/32	41 X 43 17/32	3	3
41 X 55 25/32	41 X 55 25/32	3	3
41 X 61 3/8	41 X 61 3/8	3	3
41 X 68 5/32	41 X 68 5/32	3	4
41 X 77 5/32	41 X 77 5/32	3	4
47 X 32 5/32	47 X 32 5/32	3	2
47 X 44 17/32	47 X 44 17/32	3	3
47 X 56 25/32	47 X 56 25/32	3	3
47 X 62 3/8	47 X 62 3/8	3	3
47 X 69 5/32	47 X 69 5/32	3	4
47 X 78 5/32	47 X 78 5/32	3	4
32	52 1/8 X 33	3	2
33	52 1/8 X 45 3/8	3	3
34	52 1/8 X 57 5/8	3	3
345	52 1/8 X 63 1/4	3	3
35	52 1/8 X 70	3	4
36	52 1/8 X 79	3	4

INSTALLATION ANCHOR CHART NOTES:

1. Window sizes shown are for Commodity Size Windows.
2. Modular Size Windows will use the anchor quantities shown for the next larger sized Commodity Window.
3. Anchor spacing requirements for Commodity and Modular Size Windows shown on this sheet.
4. Dimensions given are for half radius head units, full radius will be shorter.

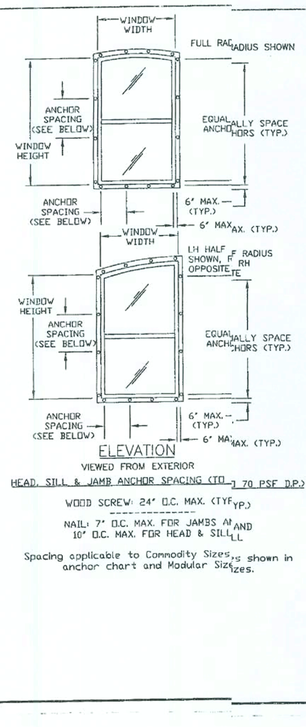

IMPORTANT INFORMATION & GENERAL NOTES (cont.)

ANCHOR INSTALLATION INSTRUCTIONS (cont.)

#8 WOOD SCREWS:

16) SEE THIS SHEET FOR #8 WOOD SCREW INSTALLATION ANCHOR CHART.
17) #8 WOOD SCREW MUST BE OF SUFFICIENT LENGTH TO ACHIEVE MINIMUM EMBEDMENT OF 1" INTO THE TWO BY WOOD BUCK OR BUILD-DOWN STRUCTURAL FRAMING COMPONENT.
18) SPACING OF WOOD SCREWS SHALL BE:
a) 6" FROM EACH CORNER OF THE HEAD, SILL AND JAMBS, AND
b) EVENLY SPACED BETWEEN CORNER ANCHORS BUT NOT EXCEEDING 24" O.C. SPACING IN HEAD, SILL AND JAMBS.

NAILS:

19) NAILS SHALL MEET THE FOLLOWING REQUIREMENTS:
a) 0.113" DIAMETER OR GREATER,
b) SUFFICIENT LENGTH TO ACHIEVE MINIMUM EMBEDMENT OF 1 7/8" INTO THE TWO BY WOOD BUCK OR BUILD-DOWN STRUCTURAL FRAMING COMPONENT(GENERALLY, NAIL 2 3/8" LENGTH OR GREATER SHALL MEET THIS REQUIREMENT),
c) HELICAL (SCREW) OR ANNULAR (RING) SHANK STYLE ONLY, AND
d) MANUFACTURER SHALL BE LISTED IN NATIONAL EVALUATION SERVICES, INC.'S NATIONAL EVALUATION REPORT, NER-272.
20) MANUFACTURER'S NAILS MEETING THESE REQUIREMENTS ARE (BUT NOT LIMITED TO) THE FOLLOWING:
a) PASLODE DEFORMED SHANK NAIL, NO. 404947, 404537, 650111 AND 650148.
b) DURO-FAST DEFORMED SHANK NAIL NO. 325.
21) SPACING OF NAILS SHALL BE:
a) 6" FROM EACH CORNER OF THE HEAD, SILL AND JAMBS, AND
b) EVENLY SPACED BETWEEN CORNER ANCHORS AND NOT EXCEEDING 7" O.C. SPACING FOR THE JAMBS AND 10" O.C. SPACING FOR THE HEAD AND SILL.

DESIGN PRESSURE RATING & FBC REQUIREMENTS

22) IF EXACT WINDOW SIZE IS NOT LISTED IN WOOD SCREW ANCHOR CHART, USE ANCHOR QUANTITY LISTED FOR NEXT LARGER SIZE.
23) INSTALLATIONS DEPICTED IN THESE INSTRUCTIONS ACCEPTABLE FOR DESIGN PRESSURES TO 70 PSF FOR WINDOW SIZES SHOWN IN CHART WITH SPACINGS SHOWN. DESIGN PRESSURES (D.P.) SHOWN ARE POSITIVE AND NEGATIVE.
24) GLASS THICKNESS MAY VARY PER THE REQUIREMENTS OF ASTM E1300 GLASS CHARTS.
25) COMPLIES WITH CHAPTER 17 SECTIONS 1707.4.4.1 FOR ANCHORING REQUIREMENTS AND 1707.4.4.3 FOR WOOD OR APPROVED FRAMING MEMBERS, MARCH 1, 2002.

REV	FLORIDA EXTRUDERS INTERNATIONAL, INC. 2540 JEWETT LANE SANFORD, FLORIDA
B	CERTIFICATE OF AUTHORIZATION NO. 9235
C	TITLE: INSTALLATION DETAIL W/#8 SCREWS OR NAILS
D	SINGLE HUNG RADIUS HEAD FIN - SERIES 1000, 1500, & 2000
E	DRAWN BY: RJA / APPROVED BY: RJA
	DATE: 7/29/04 / SCALE: N. T. S. / DWG.: FLEX0041 SHEET 2 OF 2

REVISIONS :

Maronda Homes
4005 MARONDA WAY SANFORD, FLORIDA
(407) 321-0064

FLORIDA EXTRUDERS
WINDOWS IN FRAME

RELEASE DATE:

c:\pasteuptitle.dgn 03 APR 2006 09:10:46

SHEET:
1 of 3

c:\pasteuptitle.dgn Apr. 03, 2006 09:10:46

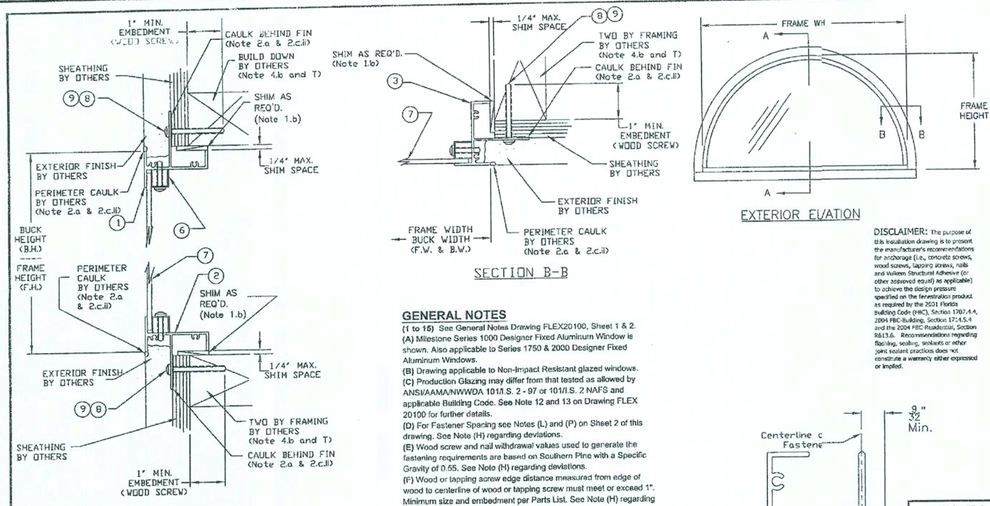

Wood Screw or Nailead must be in full contact wittattachment Fin. Centerline of faste shall be approximately 9/3 from edge of Attachment Fin.

PARTS LIST

1 Head - FinFrame
2 Sill - Fin Frame
3 Jamb - Fin Frame
4 Not Used
5 Not Used
6 Glazing Bead - Rigid Vinyl
7 Glazing - See Note (B) and (C)
8 #8 Wood or Tapping Screw with a minimum embedment of 1" into the structural wood substrate. See Note (K) and Detail A on this drawing and Note 4.b & 8 on Drawing FLEX20100.
9 Round Head Deformed Shank Nail with minimum 0.113" diameter (11 GA) and minimum embedment of 1-7/8" into the structural wood substrate. See Note (N) and Detail A on this drawing and Notes 4.b & 9 on Drawing FLEX20100.

GENERAL NOTES

(1 to 16) See General Notes Drawing FLEX20100, Sheet 1 & 2.
(A) Milestone Series 1000 Designer Fixed Aluminum Window is shown. Also applicable to Series 1750 & 2000 Designer Fixed Aluminum Windows.
(B) Drawing applicable to Non-Impact Resistant glazed windows.
(C) Production Glazing may differ from that tested as allowed by ANSI/AAMA/NWWDA 101/I.S. 2-97 or 101/I.S. 2 NAFS and applicable Building Code. See Note 12 and 13 on Drawing FLEX 20100 for further details.
(D) For Fastener Spacing see Notes (L) and (P) on Sheet 2 of this drawing. See Note (H) regarding deviations.
(E) Wood screw and nail withdrawal values used to generate the fastening requirements are based on Southern Pine with a Specific Gravity of 0.55. See Note (H) regarding deviations.
(F) Wood or tapping screw edge distance measured from edge of wood to centerline of wood or tapping screw must meet or exceed 1". Minimum size and embedment per Parts List. See Note (H) regarding deviations.
(G) Nail edge distance measured from edge of wood to centerline of nail must meet or exceed 9/16" or 5 times Shank Diameter, whichever is larger. Minimum size and embedment per Parts List. See Note (H) regarding deviations.
(H) Any deviation less than the minimum requirements stated must be approved by the manufacturer or engineered by "other" Design Professional in accordance with the applicable Building Code and Product Approval.
(I) All field supplied holes in the frame (if required) will be 3/16" in diameter for #8 wood screws or the shank diameter of the nail rounded up to the next standard designation drill bit size.
(J) Wood Screws and Nails SHALL NOT be mixed to fasten the same assembly.

DISCLAIMER: The purpose of this installation drawing is to present the manufacturer's recommendations for anchorage (i.e., concrete screws, wood screws, tapping screws, nails and Vulkem Structural Adhesive (or other approved equal) as applicable) to achieve the design pressure specified on the fenestration product as required by the 2001 Florida building Code (HVC), Section 1707.4.4, 2004 FBC-Building, Section 1710.5.4 and the 2004 FBC-Residential, Section R613.6. Recommendations regarding flashing, sealing, sealants or other joint sealant practices does not constitute a warranty either expressed or implied.

Florida Extruders Int'l., Inc.
2540 Jewett Lane - Sanford, FL 32771
407-323-3300 - 407-323-3307 (fax)
www.floridaextruders.com
Florida COA No. 9235

TITLE: Milestone Series 1000 & 2000 Non-Impact Resistant Aluminum Fin Frame Designer Fixed Window Installation Drawing for Wood Substrate with Wood Screws or Nails

REVISIONS

No.	Date	By	Description
0	12/27/05	RJA	Supersedes FLEX037

Date: 12/27/05
Scale: NTS
Drawn By: RJA
Checked By: JH

Robert J. Amoruso, P.E.
FL License No. 49752

Drawing No. FLEX28120
Sheet 1 of 2

FASTENER INSTALLATION INSTRUCTIONS - FLEX28120

#8 WOOD SCREWS:

(K) #8 Wood Screw must be of sufficient length to achieve minimum embedment of 1" into the two by wood framing or the build-down framing component.
(L) #8 Wood Screw spacing shall be as follows:
- 6" maximum from each corner of head, sill or jambs, and
- evenly spaced between corner fasteners but not exceeding 24" o.c. spacing in head, sill or jambs for the following configurations at design pressures to 70 PSF:
  - eyebrow
  - half-circle arch
  - half-eyebrow
  - octagon
  - fan
  - pentoid
  - full-circle
  - half-circle
  - triangle
  - trapezoid
  - oval
- evenly spaced between corner fasteners but not exceeding 16" o.c. spacing in head, sill or jambs for the following configurations at design pressures to 70 PSF:
  - quarter-circle
  - quarter-circle arch
  - half-fan

(M) Wood screws shall not be used to fasten assembly into end grain of wood.

NAILS:

(N) Nails shall meet the following requirements:
- 0.113" diameter or greater,
- sufficient length to achieve minimum embedment of 1 7/8" into the two by wood or build-down framing (generally, nail 2 3/8" length or greater shall meet this requirement), and
- helical (screw) or annular (ring) shank style only.

(O) Manufacturer's nails meeting these requirements are (but not limited to) the following:
- Paslode deformed shank nail, No. 404947, 404537, 650111 and 650148.
- Duro-Fast deformed shank nail No. 325.

(P) Spacing of nails shall be:
- 6" from each corner of the head, sill and jambs, and
- evenly spaced between corner fasteners but not exceeding the o.c. spacing in head, sill and jambs for the following configurations at design pressures 46 to 70 PSF:
  - eyebrow 7" o.c. spacing
  - half-eyebrow 7" o.c. spacing
  - fan 7" o.c. spacing
  - half-fan 5" o.c. spacing
  - full-circle 9" o.c. spacing
  - half-circle 7" o.c. spacing
  - half-circle arch 7" o.c. spacing
  - quarter-circle 5" o.c. spacing
  - quarter-circle arch 5" o.c. spacing
  - oval 15" o.c. spacing
  - octagon 9" o.c. spacing
  - pentoid 7" o.c. spacing
  - triangle 7" o.c. spacing
  - trapezoid 7" o.c. spacing

(P) Spacing of nails shall be (continued):
- evenly spaced between corner fasteners but not exceeding the o.c. spacing in head, sill and jambs for the following configurations at design pressures to 45 PSF:
  - eyebrow 12" o.c. spacing
  - half-eyebrow 12" o.c. spacing
  - fan 11" o.c. spacing
  - half-fan 8" o.c. spacing
  - full-circle 14" o.c. spacing
  - half-circle 11" o.c. spacing
  - half-circle arch 12" o.c. spacing
  - quarter-circle 8" o.c. spacing
  - quarter-circle arch 8" o.c. spacing
  - oval 24" o.c. spacing
  - octagon 14" o.c. spacing
  - pentoid 12" o.c. spacing
  - triangle 12" o.c. spacing
  - trapezoid 12" o.c. spacing

(Q) Nails shall not be used to fasten assembly into end grain of wood

DESIGN PRESSURE RATING & FBC CODE COMPLIANCE

(R) Installations depicted in these instructions acceptable for design pressures to 70 PSF with fastener spacing in Notes (L) and (P). Design Pressures (D.P.) are positive and negative. Overall window assembly design pressure may be less than 70 PSF and shall be determined in accordance with Note 13 of FLEX20100.
(S) Production Glazing may differ from that tested as allowed by ANSI/AAMA/NWWDA 101/I.S. 2 - 97 or 101/I.S. 2 NAFS and applicable Building Code. See Note 12 and 13 on Drawing FLEX 20100 for further details.
(T) Structural two by wood and/or framing at the head, sill and jambs to be securely fastened to transfer the load to the wood structural substrate per the FBC and the engineer of record's details as applicable.
(U) See FLEX20100, Notes 10 to 15 for additional FBC Code Compliance.

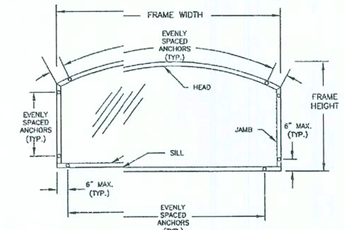

EXTERIOR ELEVATION

ANCHOR SPACING ILLUSTRATION
EYEBROW / ARCH DESIGNER WINDOW

Florida Extruders Int'l., Inc.
2540 Jewett Lane - Sanford, FL 32771
407-323-3300 - 407-323-3307 (fax)
www.floridaextruders.com
Florida COA No. 9235

TITLE: Milestone Series 1000 & 2000 Non-Impact Resistant Aluminum Fin Frame Designer Fixed Window Installation Drawing for Wood Substrate with Wood Screws or Nails

REVISIONS

No.	Date	By	Description
0	12/27/05	RJA	Supersedes FLEX037

Date: 12/27/05
Scale: NTS
Drawn By: RJA
Checked By: JH

Drawing No. FLEX28120
Sheet 2 of 2

REVISIONS :

COPYRIGHT © 2002 MARONDA HOMES

Maronda Homes
4005 MARONDA WAY SANFORD, FLORIDA
(407) 321-0064

FLORIDA EXTRUDERS
WINDOWS IN FRAME

RELEASE DATE:

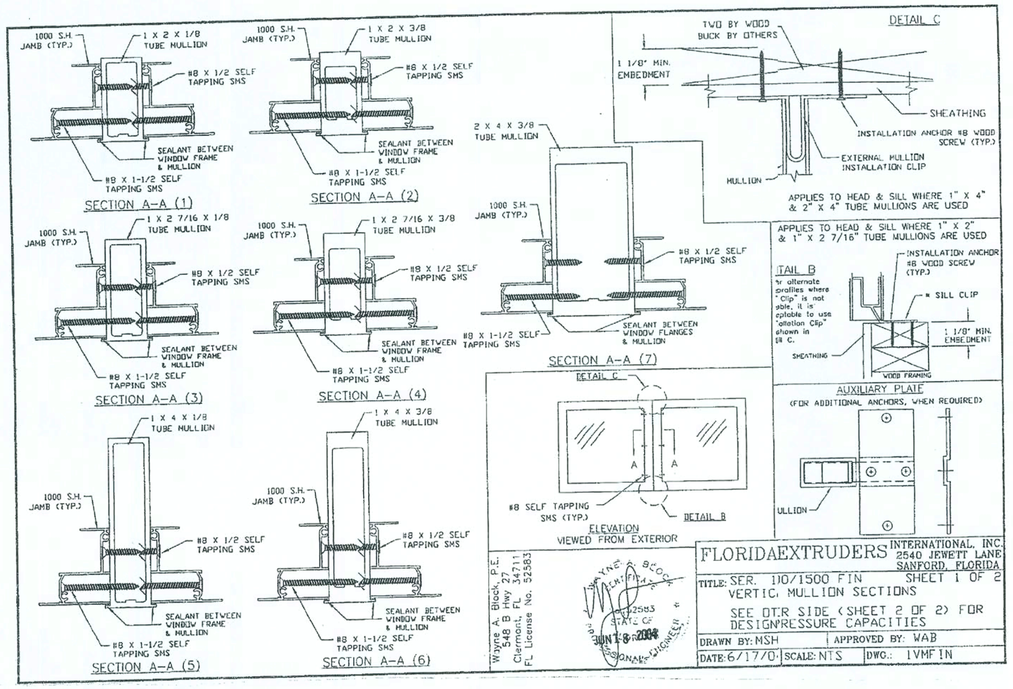

Wayne A. Block, P.E.
348 B Hwy 27
Clermont, FL 34711
FL License No. 52583

FLORIDA EXTRUDERS INTERNATIONAL, INC. 2540 JEWETT LANE SANFORD, FLORIDA
TITLE: SER. 1000/1500 FIN SHEET 1 OF 2
VERTICAL MULLION SECTIONS
SEE OTHER SIDE (SHEET 2 OF 2) FOR DESIGN PRESSURE CAPACITIES
DRAWN BY: MSH | APPROVED BY: WAB
DATE: 6/17/04 | SCALE: NTS | DWG.: 1VMFIN

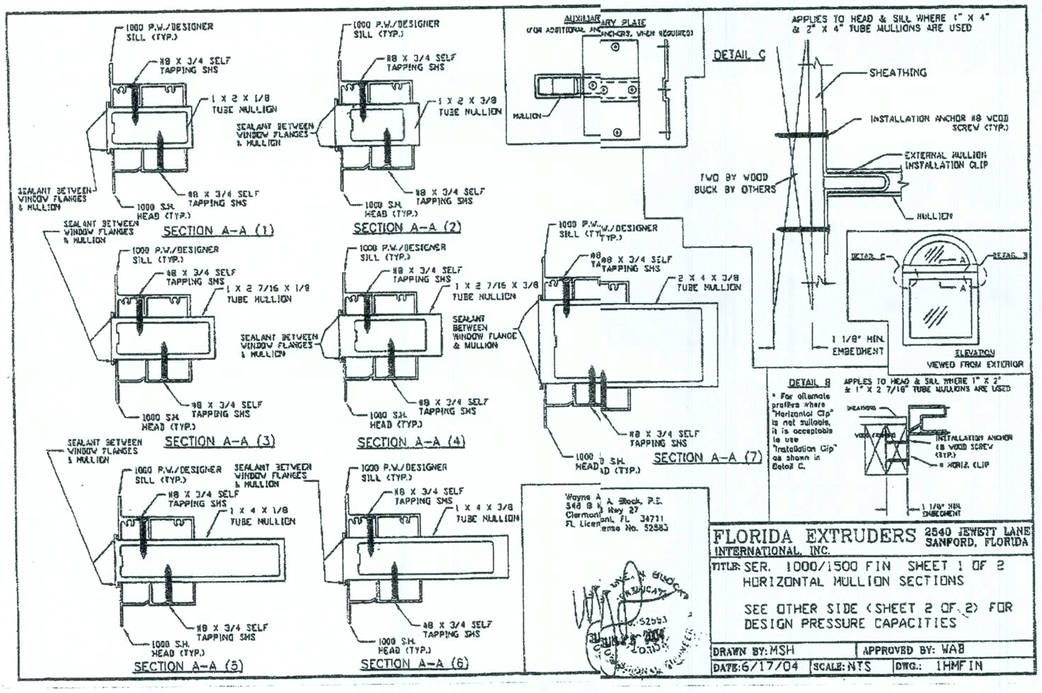

Wayne A. Block, P.E.
348 B Hwy 27
Clermont, FL 34711
FL License No. 52583

FLORIDA EXTRUDERS INTERNATIONAL, INC. 2540 JEWETT LANE SANFORD, FLORIDA
TITLE: SER. 1000/1500 FIN SHEET 1 OF 2
HORIZONTAL MULLION SECTIONS
SEE OTHER SIDE (SHEET 2 OF 2) FOR DESIGN PRESSURE CAPACITIES
DRAWN BY: MSH | APPROVED BY: WAB
DATE: 6/17/04 | SCALE: NTS | DWG.: 1HMFIN

c:\pasteuptitle.dgn 03 APR 2006 09:03

SHEET: 2 of 3

c:\pasteuptitle.dgn Apr. 03, 2006 09:11:03

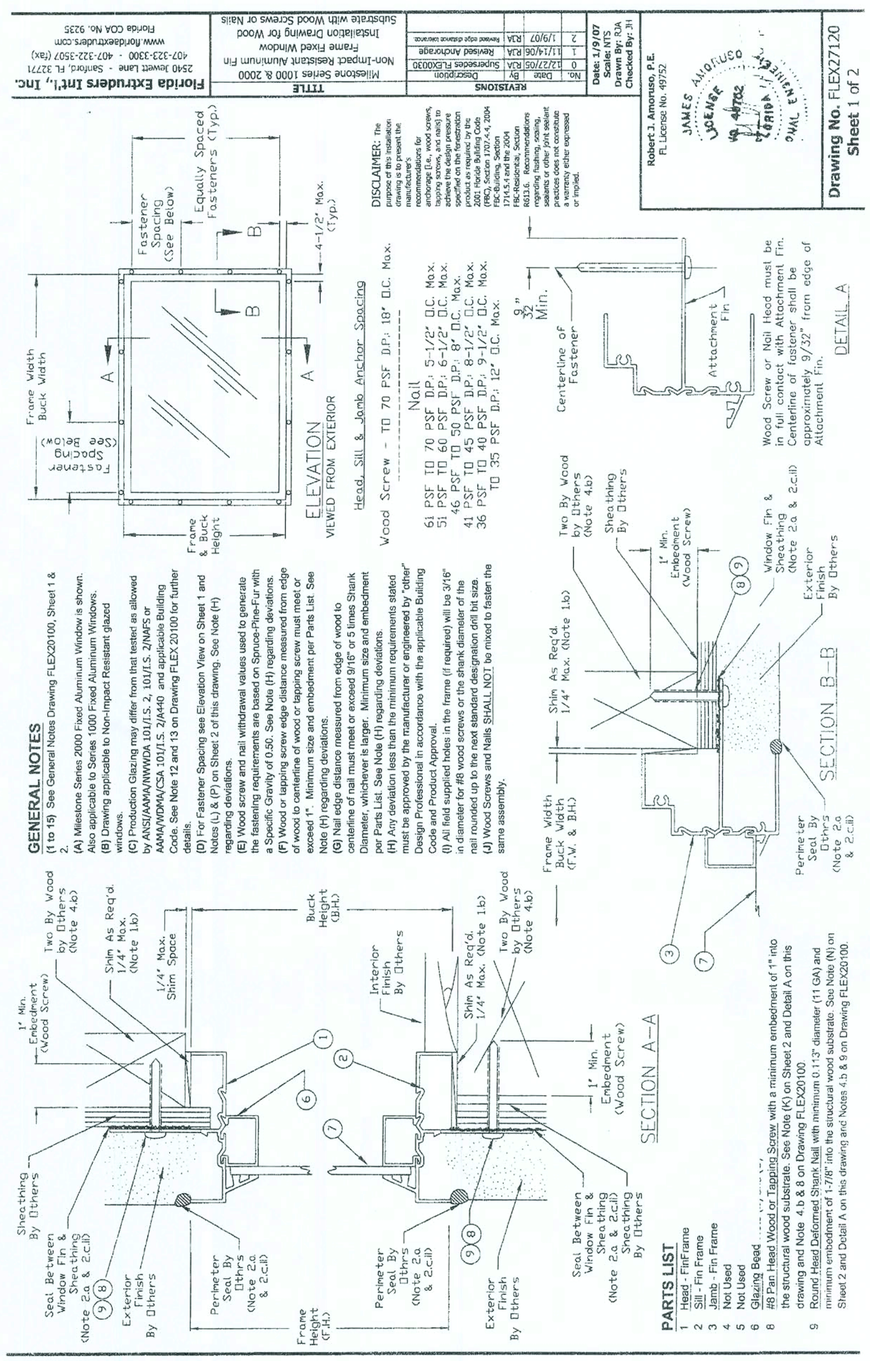

GENERAL NOTES

(1 to 15) See General Notes Drawing FLEX20100, Sheet 1 & 2.

(A) Milestone Series 2000 Fixed Aluminum Window is shown. Also applicable to Series 1000 Fixed Aluminum Windows.

(B) Drawing applicable to Non-Impact Resistant glazed windows.

(C) Production Glazing may differ from that tested as allowed by ANSI/AAMA/NWWDA 101/I.S. 2, 101/I.S. 2/NAFS or AAMA/WDMA/CSA 101/I.S. 2/A440 and applicable Building Code. See Note 12 and 13 on Drawing FLEX 20100 for further details.

(D) For Fastener Spacing see Elevation View on Sheet 1 and Notes (L) & (P) on Sheet 2 of this drawing. See Note (H) regarding deviations.

(E) Wood screw and nail withdrawal values used to generate the fastening requirements are based on Spruce-Pine-Fur with a Specific Gravity of 0.50. See Note (H) regarding deviations.

(F) Wood or tapping screw edge distance measured from edge of wood to centerline of wood or tapping screw must meet or exceed 1". Minimum size and embedment per Parts List. See Note (H) regarding deviations.

(G) Nail edge distance measured from edge of wood to centerline of nail must meet or exceed 9/16" or 5 times Shank Diameter, whichever is larger. Minimum size and embedment per Parts List. See Note (H) regarding deviations.

(H) Any deviation less than the minimum requirements stated must be approved by the manufacturer or engineered by "other" Design Professional in accordance with the applicable Building Code and Product Approval.

(I) All field supplied holes in the frame (if required) will be 3/16" in diameter for #8 wood screws or the shank diameter of the nail provided up to the next standard drill bit size.

(J) Wood screws and Nails SHALL NOT be moved to fasten the same assembly.

PARTS LIST

1. Head - FillFrame
2. Sill - Fin Frame
3. Jamb - Fin Frame
4. Not Used
5. Not Used
6. Glazing Bead
8. #8 Pan Head Wood or Tapping Screw with a minimum embedment of 1" into the structural wood substrate. See Note (K) on Sheet 2 and Detail A on this drawing and Note 4.b & 8 on Drawing FLEX20100.
9. Round Head Deformed Shank Nail with minimum 0.113" diameter (11 GA) and minimum embedment of 1-7/8" into the structural wood substrate. See Note (N) on Sheet 2 and Detail A on this drawing and Notes 4.b & 9 on Drawing FLEX20100.

FASTENER INSTALLATION INSTRUCTIONS - FLEX27120

#8 WOOD SCREWS:

(K) #8 Wood Screw must be of sufficient length to achieve minimum embedment of 1" into the two by wood framing.

(L) Spacing of wood screws shall be:
- 4-1/2" max. from each corner of the head, sill and jambs, and
- evenly spaced between corner fasteners but not exceeding 18" o.c. spacing for the head, sill and jambs as shown in Elevation View on Sheet 1 of this drawing.
- Tolerance is +/- 1". This tolerance is applicable to the evenly spaced distance. 2
- Corner distance measured from frame/buck width or height dimension of frame.

(M) Wood screws shall not be used to fasten assembly into end grain of wood.

NAILS:

(N) Nails shall meet the following requirements:
- 0.113" diameter or greater,
- sufficient length to achieve minimum embedment of 1 7/8" into the two by wood framing (generally, nail 2 3/8" length or greater shall meet this requirement), and
- helical (screw) or annular (ring) shank style only.

(O) Manufacturer's nails meeting these requirements are (but not limited to) the following:
- Paslode deformed shank nail, No. 404947, 404537, 650111 and 650148.
- Duro-Fast deformed shank nail No. 325.

(P) Spacing of nails shall be:
- 4-1/2" max. from each corner of the head, sill and jambs, and
- evenly spaced between corner fasteners and not exceeding o.c. spacing for the head, sill and jambs as shown in Elevation View on Sheet 1 of this drawing.
- Tolerance is +/- 1". This tolerance is applicable to the evenly spaced distance. 2
- Corner distance measured from frame/buck width or height dimension of frame.

(Q) Nails shall not be used to fasten assembly into end grain of wood.

DESIGN PRESSURE RATING & FBC CODE COMPLIANCE

(R) Installations depicted in these instructions acceptable for design pressures to 70 PSF with fastener spacing shown the Elevation View on Sheet 1 of this drawing for the following window sizes:
- to 52 1/8" x 95
- to 63" x 80"
- to 71" x 71"
- to 73" x 73"
- to 83" x 55 1/4"
- to 95" x 49 5/8"
- to 119" x 37 3/8"

Design Pressures (D.P.) are positive and negative. Overall window assembly design pressure may be less than 70 PSF and shall be determined in accordance with Note 13 of FLEX20100.

(S) Production Glazing may differ from that tested as allowed by ANSI/AAMA/NWWDA 101/I.S. 2, 101/I.S. 2/NAFS or AAMA/WDMA/CSA 101/I.S. 2/A440 and applicable Building Code. See Note 12 and 13 on Drawing FLEX 20100 for further details.

(T) Structural two by wood buck and/or framing at the head, sill and jambs to be securely fastened to transfer the load to the wood structural substrate per the FBC and the engineer of record's details as applicable.

(U) See FLEX20100, Notes 10 to 15 for additional FBC Code Compliance.

Drawing No. FLEX27120
Sheet 2 of 2

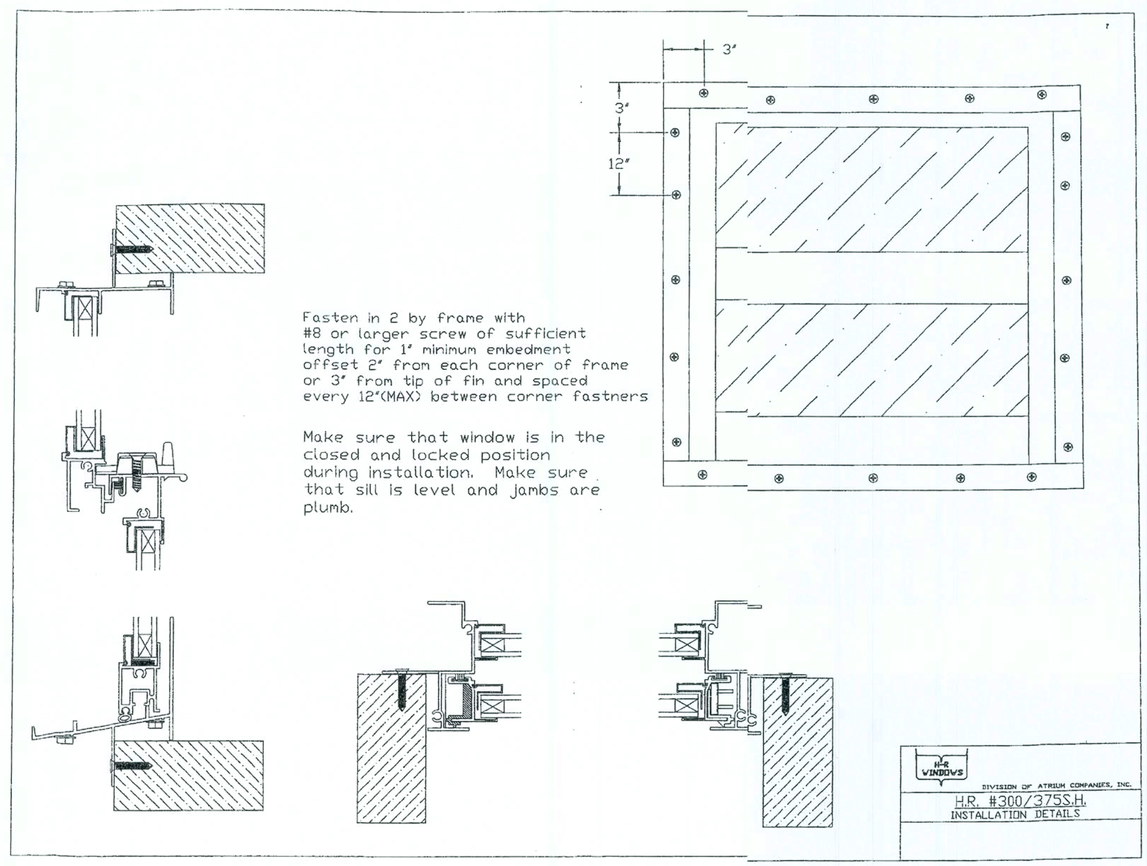

REVISIONS:
3-11-08 Revised

Maronda Homes
(407) 321-0064 4005 MARONDA WAY SANFORD, FLORIDA

FLORIDA EXTRUDERS
WINDOWS IN FRAME

RELEASE DATE:

SHEET:
3 of 3

c:\fla-extrud.dgn Sep. 01, 2006 09:32:39

PRODUCT APPROVAL INFORMATION SHEET FOR FLORDIA

PROJECT NAME: _____ PERMIT # _____

PROJECT ADDRESS: _____

As required by Florda Statute 553.842 and Florda Administrative Code 9b-72. Please provide the informah and product approval number(s) for the building components listed below as applicable to the building construction project for the permit number listed above. You should contact you product supplier if you do not know the product approval number for any of the applicable listed products. Information regarding statewide product approval may be obtained at: www.floridabuilding.org.

Category/Subcategory	Manufacturer	Product Description	Limitation of Use	State #	Design Pressures
A. EXTERIOR DOORS					
1. Swinging	Plastpro Inc.	Fiberglass Doors	Evaluated for use in locations adhering to the Florda Buildi Code and twere pressure requirements as determined by ACSE 7 Minimum Design Loa For Building and Other Structes.	FL 6729.1 FL 6729.5	+ 50 / -50 + 50 / -50
2. Sliding	Simonton/Norandex Florda Extruders	Sliding Glass Doors	500 72X80 SGD-R45 Milestone 1000 SGD	FL 5979.1 FL 45.1	+ 50 / -50 +45 / -45
3. Sectional					
4. Roll up	Wayne Dalton	Garage Doors 130 16' 9100 / 5120 8' Garage Doors 140 16' 9100 / 5120 8'	As indicated in evaluath report and Installation drawings. Not to be used in HVHZ.	FL 5287.1 Fl 5287.3 FL 9174.4 FL 9174.5	+26.9 /-30.8 +25.9 /-28.8 +43.2 /-49.6 +39.2 /-43.7
B. WINDOWS					
1. Single Hung	H-R Windows Danvid Window Co Florda Extruders	300 Fin Single Hung 341 Flange Frame S.H. Milestine 1000 S.H.	40-17 72x74 H-r45	FL5089.1 FL 2752.1 FL 42.1	+45 / -45 +55 / -55 +45 / -45
2. Horizontal Slider					
3. Casement					
4. Double hung					
5. Fixed	H-R Windows Danvid Window Co Florda Extruders	300Fin Frame Fixed341 Flange Frame Fixed Milestone 1000 Fixed	437.438 111X63 F-C60 :16 Tempered Glas. Flange & Fin	FL 1291.2 FL 2349.1 FL 44.1	+55 / -55 +70 / -70 +45 / -45
6. Awning					
7. Pass-through					
8. Projected					
9. Mullion	H-R Windows Florda Extruders	Mullions Milestone Tube Mull Fin Or Flange	Evaluated for use in locations adhering to the Florda Buildi Code and where pressure requirements as determined by ACSE 7 Minimum Design Loa for Building and Other Structes.	FL 5782 FL 3136-R2	+45 / -45
10. Wind breaker					
11. Dual action					
12. Other					
C. PANEL WALL					
1. Siding	Owen Corning	Norandex - Summit Manor Dbl 4.5 Butch Lap Reynolds - Easy Street Dbl 4.5 Dutch Lap	This Evaluation is not for use within the FBC HVHZar on Education Facilities win the State of Fiordta. Vinyl Siding is limited to Type construction, as defined bow. Section 602.5- TYPE V CONSTRUCTION Type V construction is the typef construction in which the structural elements, exterio walls and interior walls are of ant material permitti by this code. Compliance is valid only if the subject profile trade nam's current on the VSI Vinyl Sing Certification Program.	FL 920.3 FL 920.7	+NA / -152 +NA / -152
2. Soffit	Alsco Metal Corp	16" Vented Soffit Quad 4 Aluminum Soffit	For use as soffit only. No for use in HVHZ	FL 4459.1	46.71 PSF

Category/Subcategory	Manufacturer	Product Description	Limitation of Use	State #	Design Pressures
D. ROOFING PRODUCTS					
1. Asphalt shingles	Owens Corning	Asphalt Shingle Ridge Vents	This Approval not for use in the HVHZ. All FBC sections that apply to counties except Broward and Miami-Dade must be followed	FL 3663 FL 234	
2. Underlayments					
3. Roofing fasteners					
4. Nonstructural metal roof					
5. Built-up roofing					
6. Modified bitumen	Polyglass	Two layer torch down	The max design pressure for the selected assembly shall meet or exceed the Zone 1 design pressure determined in accordance with FBC chapter 16.	FL 1654.8 FL 1654.9	
7. Single ply roofing					
8. Roofing tiles					
9. Roofing insulation					
10. Waterproofing					
11. Wood shingles/shakes					
12. Roofing slate					
13. Liquid applied roofing					
14. Cement-adhesive coats					
15. roof tile adhesive					
16. Spray applied polyurethane roof					
17. roof vents	Owens Corning Stamco Inc. Lamanco	Galvanized metal roof vents	This Approval not for use in the HVHZ. All FBC sections that apply to counties except Broward and Miami-Dade must be followed.	FL 5289.1 FL 8103.1 FL 3792.5	
E. SHUTTERS					
1. Storm Panels	Atrium Shutters, Inc. K&D Manufacturing All American Shutters, Inc.	5L Panel Galv. Stl Storm	This product may only be Installed on concrete, hollow concrete block or wood substrates. This product is NOT suitable for Installation in the High Velocity Hurricane Zone.	FL 5547.1 FL 2773.1 FL 393.1	50 PSF +47 / -50
F. STRUCTURAL COMPONENTS					
1. Wood connector/anchor	United Steel Products	Anchors, Hangers Etc. Structural Components Wood Connectors	Subject to limitation and Installation Instructions specified in NOA 05-0105.05	FL.R1, 565, 569, 572, 576, 815, 816, 817, 818, 819, 820, 821, 822, 859, 1247, 1777, 2033, 2620, 3923, 4928, 5631, 6223	
2. Truss plates	Mitek Industries Inc	Truss Connectors	No Limitation of Use.	FL 2197 R1	
3. Engineered lumber					
4. Railing					
5. Coolers-freezers					
6. Concrete admixtures					
7. Material					
8. Insulation forms					
9. Plastics					
10. Deck-roof					
11. Wall					
12. Sheds					
G. SKYLIGHTS					
1. Skylight					
2. Other					
H. NEW EXTERIOR ENVELOPE PRODUCTS					
1.					
2.					

In addition to completing the above list of manufacturers, product description and State approval number for the products used on this project, It is the Contractor's or Authorized Agent's reponsibility to have a legible copy of each manufacturer's printed instructions, along with the list above, on the job site available to the Inspector.

The products listed below did not demonstrate product approval at time of plan review. I understand that before these products can be inspected, they must be submitted for review for code compliance and approved by the Plans Examiner. This form will be revised to include each new product in the categories listed above and will be highlighted to indicate the new products and required information.

_____

_____

_____

_____

_____

Authorized Project Agent: _____ _____
(Contractor or Design Professional) (Print Name) (Signature)

Company Name: _____

Mailing Address: _____

_____

City: _____ State: _____ Zip Code: _____

Telephone Number: ( ) _____ Fax Number: ( ) _____

Cell Phone Number: ( ) _____ E-mail Address: _____

REVISIONS :
10-29-07 UPDATE LISTS
01-21-08 UPDATE ROLL UP DOORS

Maronda Homes
(407) 321-0064 4005 MARONDA WAY SANFORD, FLORIDA

FLORIDA:
THIS STRUCTURE WAS DESIGNED IN ACCORDANCE AND MEETS THE REQUIREMENTS OF THE FLORIDA BUILDING CODE 2004 : RESIDENTIAL AND2005, 2006 SUPPLEMENT

PRODUCT APPROVAL

GARAGE:

DRAWN BY:

RELEASE DATE: 08/13/13

PLOT DATE: 21 JAN 2008

SHEET:

pvhprod_approval.dgn

DISTINCTION SERIES
SMC INSWING RESIDENTIAL INSULATED FIBERGLASS DOOR IN WOOD FRAME

GENERAL NOTES

1. THE FOLLOWING PRODUCT HAS BEEN EVALUATED FOR COMPLIANCE WITH THE WIND LOADS SPECIFIED IN SECTION 120 OF THE TEXAS DEPARTMENT OF INSURANCE WINDSTORM RESISTANT CONSTRUCTION GUIDE AND SECTION 103 OF THE TEXAS WINDSTORM INSURANCE ASSOCIATION BUILDING CODE FOR WINDSTORM RESISTANT CONSTRUCTION.
2. WOOD BUCKS BY OTHERS, MUST BE ANCHORED PROPERLY TO TRANSFER LOADS TO THE STRUCTURE.
3. PRODUCT ANCHORS SHALL BE AS LISTED AND SPACED AS SHOWN ON DETAILS. ANCHOR EMBEDMENT TO BASE MATERIAL SHALL BE BEYOND WALL DRESSING OR STUCCO.
4. PRODUCT DOES NOT MEET IMPACT RESISTANCE
5. DESIGN PRESSURE RATING SHALL BE AS FOLLOWS:
   - FOR 8' 8" HIGH DOORS: SEE TABLE 1.
   - FOR FRAMES OVER 6' 8" UP TO 8' 0": SEE TABLE 2.

DISTINCTION SMC FIBERGLASS DOOR

DOOR LEAF CONSTRUCTION:

FACE SHEETS: EACH SLAB IS CONSTRUCTED FROM 0.080" THICK FIBERGLASS SKIN.

CORE DESIGN: THE INTERIOR CAVITY OF EACH DOOR IS FILLED WITH RIGID POLYURETHANE.

CONSTRUCTION: THE VERTICAL EDGES OF THE SLAB CONSIST OF GLUED INTERLOCKING FIBERGLASS JOINTS.THE HORIZONTAL EDGES CONSIST OF THE FIBERGLASS SKIN GLUED TO THE WOOD BLOCK AT TOP AND TO THE RIGID PVC FOAM INSERT AT BOTTOM.

TABLE OF CONTENTS

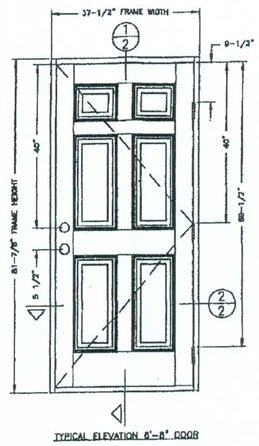

TYPICAL ELEVATION 6'-8" DOOR

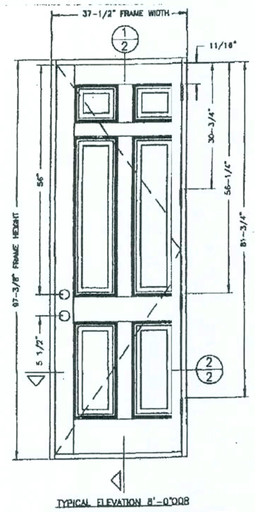

TYPICAL ELEVATION 8'-0"DOR

DESIGN PRESSURE RATING (TABLE #1)	WHERE WATER INFILTRATION REQUIREMENT IS NEEDED	WHERE WATER INFILTRATION REQUIREMENT IS NOT NEEDED
POSITIVE	NOT APPROVED	+60 PSF
NEGATIVE	NOT APPROVED	-60 PSF

DESIGN PRESSURE RATING (TAE #2)	WHERE WATER INFILTRATION REQUIREMENT IS NEEDED	WHERE WATER INFILTRATION REQUIREMENT IS NOT NEEDED
POSITIVE	NOT APPROVED	10 PSF
NEGATIVE	NOT APPROVED	15 PSF

PLASTPRO, INC.
9 PEACH TREE HILL RD
LIVINGSTON, NJ 07039

PRODUCT: DISTINCTION SERIES SMC INSWING FIBERGLASS PATIO DOOR
PART OR ASSEMBLY: GENERAL NOTES AND ELEVATIONS

NO.	DATE	REVISIONS	BY

RW CONSULTING (813) 684-3831
DATE: 01/06/99
SCALE: N.T.S.
DWG. BY: R.P.P.
CHK. BY:
DRAWING NO.: 99-01
SHEET 1 OF 4

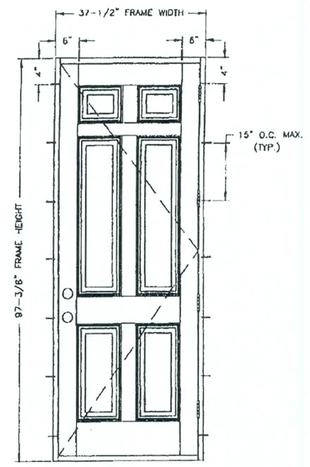

ANCHOR LAYOUT FOR 8'-0" DOOR

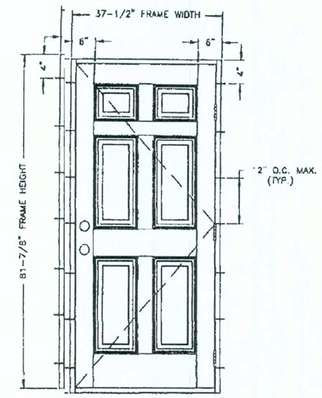

ANCHOR LAYOUT FOR 6'-8" DOOR

TYPICAL ANCHORS
1.) INTO 2BY WOOD BUCKS OR WOOD STRUCTURE
#8 PFH Wd. Screw, 1" MIN. EMBEDMENT
2.) INTO 1BY WOOD BUCKS OR INTO MASONRY
3/16" DIA. TAPCONS WITH 1-1/4" MIN. EMBEDMENT

PLASTPRO, INC.
9 PEACH TREE HILL RD
LIVINGSTON, NJ 07039

PRODUCT: DISTINCTION SERIES SMC INSWING FIBERGLASS PATIO DOOR
PART OR ASSEMBLY: ANCHORING LAYOUT

NO.	DATE	REVISIONS	BY

RW CONSULTING (813) 684-3831
DATE: 01/06/99
SCALE: N.T.S.
DWG. BY: R.P.P.
CHK. BY:
DRAWING NO.: 99-01
SHEET 3 OF 4

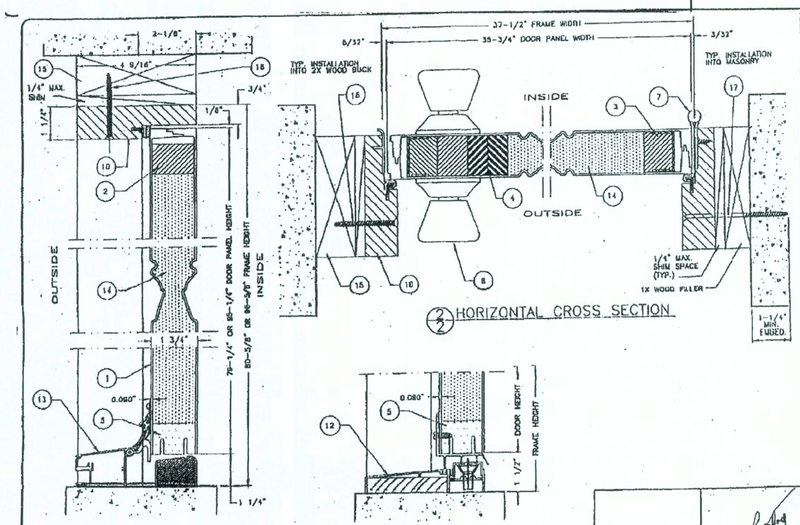

PLASTPRO, INC.
9 PEACH TREE HILL RD

PRODUCT: DISTINCTION SERIES SMC INSWING FIBERGLASS PATIO DOOR
PART OR ASSEMBLY:

RW CONSULTING (813) 684-3831
DATE: 01/06/99
SCALE: N.T.S.
DWG. BY: R.P.P.
CHK. BY:
DRAWING NO.: 99-01
SHEET 2 OF 4

NOTE:
WHEN REQ.THE USE OF 2X SHALL BE ALLOWED USING (4) EVENLY SPACED 1/4" X 3" TAPCONS IN THE SIDES, AND (2) EVENLY SPACED 1/4" X 3" TAPCONS IN THE HEADER ALL W/ 1 1/4" IMBEDMENT. IF NEEDED A 1X CAN BE NAILED 6" O.C. STAGGERED TO 2X. DOOR IS THEN ATTACHED PER DETAILS ON THIS PAGE.

FINAL ANCHORING OF A WOOD FRAME UP TO 5'4 X 6'8
SINGLE INSWING UNIT W/WO SIDELITES
PRODUCT ACCEPTANCE No.: DSI222

SCREW SCHEDULE		
①	#10 X 5/8"	PHILLIPS FLAT HEAD
②	#10 X 1 3/4"	PHILLIPS FLAT HEAD
③	#10 X 2"	PHILLIPS FLAT HEAD
④	#10 X 3"	PHILLIPS FLAT HEAD

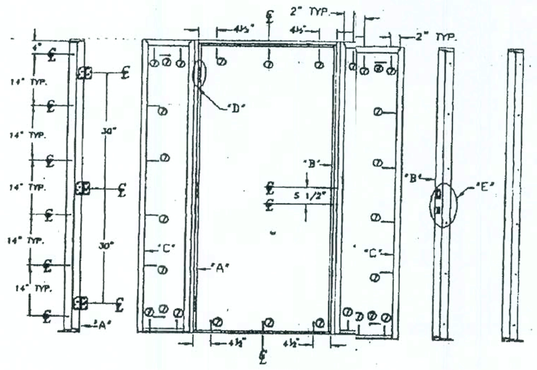

Product Acceptance No: DSI-222						
Size: up to 5'4 x 6'8	Inswing (wood jamb)			Configuration: X, OXO, XO, OX		
	2'0	2'4	2'6	2'8		3'0
Single Opaque W/Sidelites	+80 -80	+80 -80	+80 -80	80	+80 -80	+80 -60
Single Glazed W/Sidelites (Door does not meet Missile Impact)	+75 -80	+64 -77	+60 -71	71	+60 -60 +56 -67 +50 -60	+60 -60 +50 -60 +50 -60

Test # 210-1987, 210-2024 Mfg. by: Nan Ya Plastics / Plastpro Livingston, NJ 07039

ITEM	DESCRIPTION	PART No.	MATERIAL
1	DOOR SKIN (8 PANEL 8'-0")	SKS 84	SMC .080" THK FIBERGLASS
	DOOR SKIN (8 PANEL 8'-0")	SKS 96	SMC .080" THK FIBERGLASS
2	TOP RAIL (8'-0")	WCA 30	WOOD (MAHOGANY)
	TOP RAIL (8'-0")	WCA 30	WOOD (MAHOGANY)
3	HINGE STILE	WCA 30	WOOD (MAHOGANY)
		RU 422	STEEL (SS 411)
4	LOCK STILE	WCA 30 (TWO PCS.)	WOOD (MAHOGANY)
		RU 422	STEEL (SS 411)
		WCA 30 (TWO PCS.)	WOOD (MAHOGANY)
5	BOTTOM RAIL	PAS 73	FOAM PVC EXTRUSION
		MAS 0	PVC
6	DOOR BOTTOM (INSWING)	SK 250 (ENDURA)	PVC CO-EXTRUSION
		BENCHMARK ADJ. DOOR SWEEP	PVC CO-EXTRUSION
		DOOR SWEEP	ALUMINUM / PVC
7	BUTT HINGE	4 X 4	BRASS
8	LATCH LOCK	KWIKSET 200 SERIES	
9	DEAD BOLT	KWIKSET 660 SERIES	
10	DOOR FRAME	4-9/16" WOOD FRAME	FINGER JOINTED WHITE PINE
12	THRESHOLD (INSWING)	DOB 850 WEATHERSTRIP	SCHLEGEL 9-100
		4 X 4 CONNECTOR	ALUMINUM / WOOD
		DOB 830 WEATHERSTRIP	SCHLEGEL 9-100
13	THRESHOLD (INSWING)	DOB (STANDARD)	ALUMINUM / WOOD
		DOB 830	SCHLEGEL 9-100
		DOOR SWEEP	ALUMINUM / PVC
14	FOAM CORE		POLYURETHANE FOAM CORE
15	LIP		WOOD BLOCK
16	ANCHOR	#8X2-1/2" PFH Wd. Screw	STEEL
17	ANCHOR	3/16" X 1" TH TAPCON	STEEL

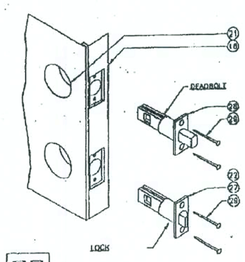

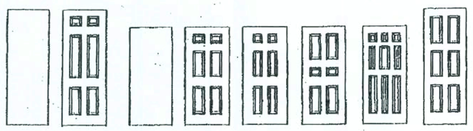

DOOR MODELS

PLASTPRO, INC.
9 PEACH TREE HILL RD

PRODUCT: DISTINCTION SERIES SMC INSWING FIBERGLASS PATIO DOOR
PART OR ASSEMBLY:

RW CONSULTING (813) 684-3831
DATE: 01/06
SCALE: N.T.S.
DWG. BY: R.P.
CHK. BY:
DRAWING NO.: 99-01
SHEET 4 OF 4

REVISIONS :

Maronda Homes
(407) 321-0064 4005 MARONDA WAY SANFORD, FLORIDA

EXT. DOOR DETAILS
IN SWING-FIBERGLASS

RELEASE DATE:

SHEET:
FD1

D:\Tbc2000\Tbc brocks\dc24-oaner\ication
09/03/33
03 JUN 2003

DISTINCTION SERIES

SMC OUTSWING RESIDENTIAL INSULATED FIBERGLASS DOOR IN WOOD FRAME

GENERAL NOTES

1. THIS PRODUCT IS DESIGNED TO MEET THE SOUTH FLORIDA BUILDING CODE 1994 EDITION FOR MIAMI-DADE COUNTY.
2. WOOD BUCKS BY OTHERS, MUST BE ANCHORED PROPERLY TO TRANSFER LOADS TO THE STRUCTURE.
3. PRODUCT ANCHORS SHALL BE AS LISTED AND SPACED AS SHOWN ON DETAILS. ANCHOR EMBEDMENT TO BASE MATERIAL SHALL BE BEYOND WALL DRESSING OR STUCCO.
4. IMPACT RESISTANT SHUTTERS NOT REQUIRED
5. DESIGN PRESSURE RATING SHALL BE AS FOLLOWS:
   - FOR 6' 8" HIGH DOORS: SEE TABLE 1.
   - FOR FRAMES OVER 6' 8" UP TO 8' 0": SEE TABLE 2.

DISTINCTION SMC FIBERGLASS DOOR

DOOR LEAF CONSTRUCTION:

FACE SHEETS: EACH SLAB IS CONSTRUCTED FROM 0.090" THICK FIBERGLASS SKIN.

CORE DESIGN: THE INTERIOR CAVITY OF EACH DOOR IS FILLED WITH RIGID POLYURETHANE.

CONSTRUCTION: THE VERTICAL EDGES OF THE SLAB CONSIST OF GLUED INTERLOCKING FIBERGLASS JOINTS.THE HORIZONTAL EDGES CONSIST OF THE FIBERGLASS SKIN GLUED TO THE WOOD BLOCK AT TOP AND TO THE RIGID PVC FOAM INSERT AT BOTTOM.

TABLE OF CONTENTS

SHEET #	DESCRIPTION
1	GENERAL NOTES, TYPICAL ELEVATIONS
2	CROSS SECTIONS (VERTICAL AND HORIZONTAL)
3	ANCHORING LAYOUT
4	PART LIST

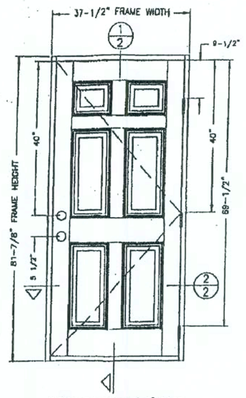

TYPICAL ELEVATION 6'-8" DOOR

DESIGN PRESSURE RATING (TABLE #1)		
	WHERE WATER INFILTRATION REQUIREMENT IS NEEDED	WHERE WATER INFILTRATION REQUIREMENT IS NOT NEEDED
POSITIVE	+50 PSF	+50 PSF
NEGATIVE	-50 PSF	-50 PSF

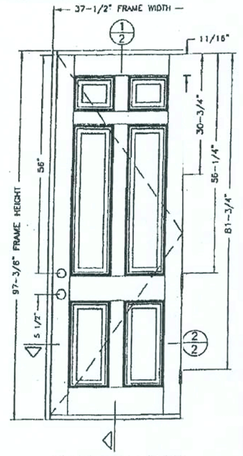

TYPICAL ELEVATION 8'-0" DOOR

DESIGN PRESSURE RATING (TABLE #2)		
	WHERE WATER INFILTRATION REQUIREMENT IS NEEDED	WHERE WATER INFILTRATION REQUIREMENT IS NOT NEEDED
POSITIVE	+50 PSF	+50
NEGATIVE	-55 PSF	-55

PLASTPRO, INC.
9 PEACH TREE HILL RD.
LIVINGSTON, NJ 07039

PRODUCT: DISTINCTION SERIES SMC OUTSWING FIBERGLASS GLAZED PATIO DOOR
PART OR ASSEMBLY: GENERAL NOTES AND ELEVATIONS

REVISIONS: NO. DATE BY

RW CONSULTING (813) 884-3831

DATE: 01/06/99
SCALE: N.T.S.
DWG. BY: R.P.P.
CHK. BY:
DRAWING NO.: 99-02
SHEET 1 OF 4

DISTINCTION SERIES

SMC OUTSWING RESIDENTIAL INSULATED FIBERGLASS DOOR IN WOOD FRAME (STEEL REINFORCED WITH FULL GLASS LITE)

GENERAL NOTES

1. THIS PRODUCT IS DESIGNED TO MEET THE SOUTH FLORIDA BUILDING CODE 1994 EDITION FOR MIAMI-DADE COUNTY.
2. WOOD BUCKS BY OTHERS, MUST BE ANCHORED PROPERLY TO TRANSFER LOADS TO THE STRUCTURE.
3. PRODUCT ANCHORS SHALL BE AS LISTED AND SPACED AS SHOWN ON DETAILS. ANCHOR EMBEDMENT TO BASE MATERIAL SHALL BE BEYOND WALL DRESSING OR STUCCO.
4. IMPACT RESISTANT SHUTTERS ARE REQUIRED
5. DESIGN PRESSURE RATING SHALL BE AS FOLLOWS:
   - FOR 6' 8" HIGH DOORS: SEE TABLE 1.
   - FOR FRAMES OVER 6' 8" UP TO 8' 0": SEE TABLE 2.

DOOR LEAF CONSTRUCTION:

1. FACE SHEETS: EACH SLAB IS CONSTRUCTED FROM 0.075 THK. FIBERGLASS SKIN.
2. CORE DESIGN: THE INTERIOR CAVITY OF EACH DOOR IS FILLED WITH RIGID POLYURETHANE.
3. CONSTRUCTION: THE VERTICAL EDGES OF THE SLAB CONSIST OF GLUED INTERLOCKING FIBERGLASS JOINTS THE HORIZONTAL EDGES CONSIST OF THE FIBERGLASS SKIN, GLUED TO THE WOOD BUCK AT TOP AND TO THE RIGID PVC FOAM INSERT AT BOTTOM
4. GLAZING: 5/8" OVERALL THICKNESS INSULATED GLASS PANEL CONSISTING OF: TWO 1/8" TEMPERED LITES AND ONE AIR SPACE.
5. REINFORCING: ONE (1) "U" SHAPED STEEL REINFORCING CHANNEL, MEASURING 1.591"x0.748"x0.078" THK. WAS LOCATED AT EACH PANEL STILE. (8'-0" DOOR ONLY)

TABLE OF CONTENTS

SHEET #	DESCRIPTION
1	GENERAL NOTES, TYPICAL ELEVATIONS
2	CROSS SECTIONS (VERTICAL AND HORIZONTAL)
3	ANCHORING LAYOUT
4	PART LIST

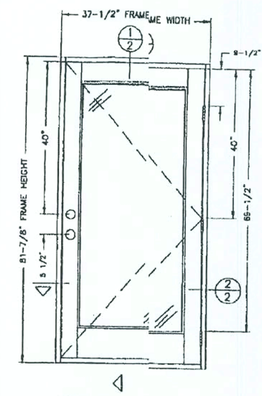

TYPICAL ELEVATION 6' 6'-8" DOOR

DESIGN PRESSURE RATING (TABLE #1)		
	WHERE WATER INFILTRATION REQUIREMENT IS NEEDED	WHERE WATER INFILTRATION REQUIREMENT IS NOT NEEDED
POSITIVE	+50 PSF	+50 PSF
NEGATIVE	-50 PSF	-50 PSF

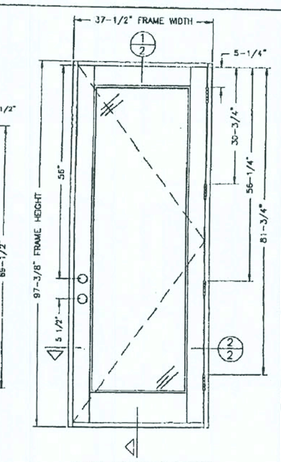

TYPICAL ELEVATION 8'-0" DOOR

DESIGN PRESSURE RATING (TABLE #2)		
	WHERE WATER INFILTRATION REQUIREMENT IS NEEDED	WHERE WATER INFILTRATION REQUIREMENT IS NOT NEEDED
POSITIVE	+80 PSF	+70 PSF
NEGATIVE	-70 PSF	-70 PSF

PLASTPRO, INC.
9 PEACH TREE HILL RD.
LIVINGSTON, NJ 07039

PRODUCT: DISTINCTION SERIES SMC OUTSWING FIBERGLASS GLAZED PATIO DOOR
PART OR ASSEMBLY: GENERAL NOTES AND ELEVATIONS

REVISIONS: NO. DATE BY

RW CONSULTING (813) 884-3831

DATE: 02/09/99
SCALE: 3/4"=1'2"
DWG. BY: R.P.P.
CHK. BY:
DRAWING NO.: 99-05
SHEET 1 OF 4

REVISIONS :

Maronda Homes

4005 MARONDA WAY SANFORD, FLORIDA
(407) 321-0064

EXT. DOOR DETAILS

OUT SWING-FIBERGLASS

RELEASE DATE:

SHEET:

FD 2

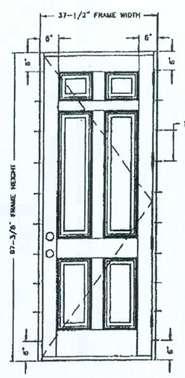

ANCHOR LAYOUT FOR 8'-0" DOOR

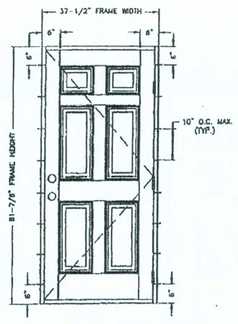

ANCHOR LAYOUT FOR 6'-8" DOOR

TYPICAL ANCHORS
1.) INTO 2BY WOOD BLOCKS OR WOOD STRUCTURE #8 SMS, 1-1/2" MIN. EMBEDMENT
2.) INTO 12BY WOOD BLOCKS OR INTO MASONRY 3/16" DIA. TAPCONS WITH 1-1/4" MIN. EMBEDMENT

PLASTPRO, INC.
9 PEACH TREE HILL RD.
LIVINGSTON, NJ 07039

PRODUCT: DISTINCTION SERIES SMC OUTSWING FIBERGLASS GLAZED PATIO DOOR
PART OR ASSEMBLY: ANCHORING LAYOUT

REVISIONS: NO. DATE BY

RW CONSULTING (813) 884-3831

DATE: 01/06/99
SCALE: N.T.S.
DWG. BY: R.P.P.
CHK. BY:
DRAWING NO.: 99-02
SHEET 3 OF 4

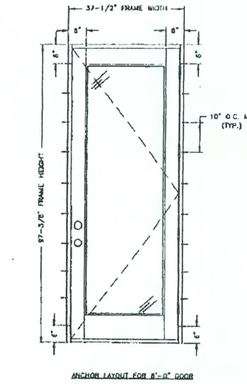

ANCHOR LAYOUT FOR 8'-0" DOOR

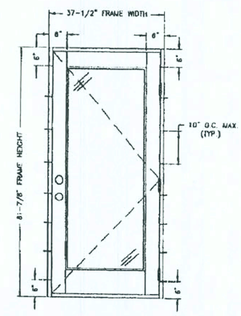

ANCHOR LAYOUT FOR 6'-8" DOOR

TYPICAL ANCHORS
1.) INTO 2BY WOOD BLOCKS OR WOOD STRUCTURE #8 SMS, 1-1/2" MIN. EMBEDMENT
2.) THRU 12BY WOOD BLOCKS AND INTO MASONRY 3/16" DIA. TAPCONS WITH 1-1/4" MIN. EMBEDMENT

PLASTPRO, INC.
9 PEACH TREE HILL RD.
LIVINGSTON, NJ 07039

PRODUCT: DISTINCTION SERIES SMC OUTSWING FIBERGLASS GLAZED PATIO DOOR
PART OR ASSEMBLY: ANCHORING LAYOUT

REVISIONS: NO. DATE BY

RW CONSULTING (813) 884-3831

DATE: 02/09/99
SCALE: N.T.S.
DWG. BY: R.P.P.
CHK. BY:
DRAWING NO.: 99-05
SHEET 3 OF 4

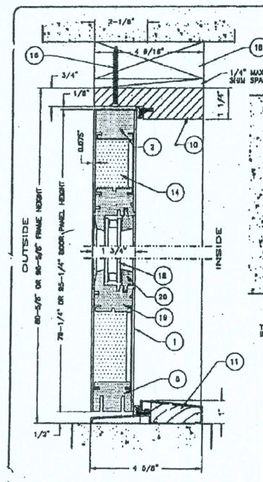

1/2 VERTICAL CROSS SECTION

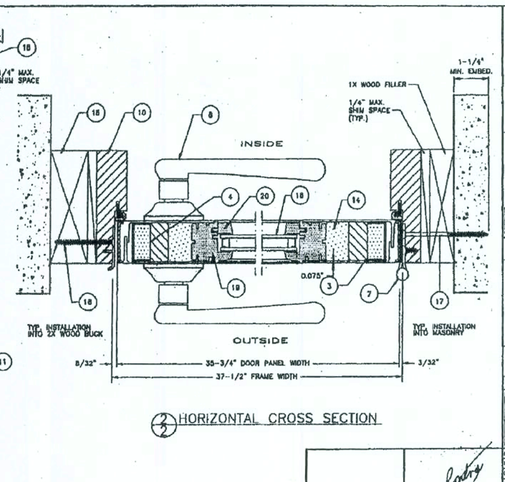

2/2 HORIZONTAL CROSS SECTION

PLASTPRO, INC.
9 PEACH TREE HILL RD.
LIVINGSTON, NJ 07039

PRODUCT: DISTINCTION SERIES SMC OUTSWING FIBERGLASS GLAZED PATIO DOOR
PART OR ASSEMBLY: VERTICAL & HORIZONTAL CROSS SECTIONS

REVISIONS: NO. DATE BY

RW CONSULTING (813) 884-3831

DATE: 02/09/99
SCALE: N.T.S.
DWG. BY: R.P.P.
CHK. BY:
DRAWING NO.: 99-03
SHEET 2 OF 4

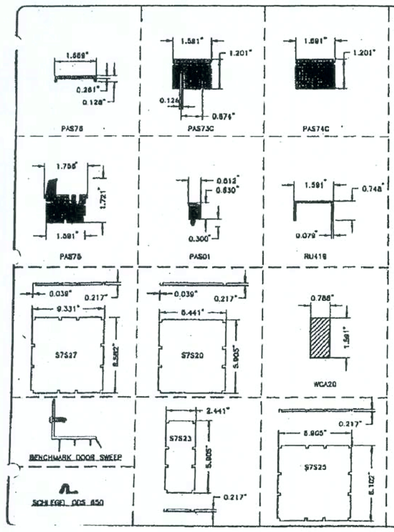

ITEM	DESCRIPTION	PART No.	MATERIAL
1	DOOR SKIN (6 PANEL 6'-8") DOOR SKIN (8 PANEL 8'-0")	--- ---	SMC .075" THK FIBERGLASS SMC .075" THK FIBERGLASS
2	TOP RAIL	PAS74C TOP RAIL S7523 ANCHOR (6'-8") S7525 ANCHOR (8'-0")	PVC FOAM STEEL STEEL
3	HINGE STILE	PAS78 DOOR EXTENSION WCA20 (6'-8" ONLY) WCA20 (8'-0" ONLY) RU 418 (8'-0" ONLY)	RIGID PVC WOOD (MAHOGANY) WOOD (MAHOGANY) STEEL (SS 41)
4	LOCK STILE	PAS78 DOOR EXTENSION WCA20 (6'-8" ONLY) WCA20 (8'-0" ONLY) RU 418 (8'-0" ONLY)	RIGID PVC WOOD (MAHOGANY) WOOD (MAHOGANY) STEEL (SS 41)
5	BOTTOM RAIL	PAS73C BOTTOM RAIL S7527 ANCHOR (6'-8") S7527 ANCHOR (8'-0")	PVC FOAM STEEL STEEL
6	DOOR BOTTOM (INSWING)	PAS73C BOTTOM RAIL DK 250 (THRESH) BENCHMARK ADJ. DOOR SWEEP DOOR SWEEP	PVC FOAM PVC CO-EXTRUSION PVC CO-EXTRUSION ALUMINUM / PVC
7	BUTT HINGE	1 1/2 X 4	BRASS
8	LATCH LOCK	KWIKSET 200 SERIES	
9	DEAD BOLT	KWIKSET 200 SERIES	
10	DOOR FRAME	1-5/16" WOOD FRAME DDS 850 WEATHERSTRIP OUTSWING BUMPER	WOOD SCHLEGEL Q-LON ALUMINUM / WOOD
11	THRESHOLD (OUTSWING)	DDS 850 WEATHERSTRIP	SCHLEGEL Q-LON
14	FOAM CORE		RIGID URETHANE FOAM CORE
15	JAMB		WOOD BLOCK
16	ANCHOR	#8 X 2-1/2" PAN SMS	STEEL
17	ANCHOR	3/16" X 1-1/4" FH TAPCON	STEEL
18	5/8" INSULATED GLASS CONSISTING OF: (2) LITES OF 1/8" TEMP. GLASS + AIR SPACE		
19	INTERNAL FRAME	PAS75	PVC FOAM
20	GLAZING BEAD	PAS01	PVC FOAM

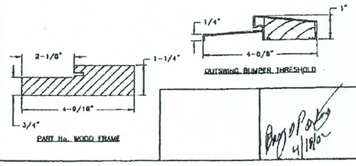

PART No. WOOD FRAME

OUTSWING BUMPER THRESHOLD

PLASTPRO, INC.
9 PEACH TREE HILL RD.
LIVINGSTON, NJ 07039

PRODUCT: DISTINCTION SERIES SMC OUTSWING FIBERGLASS GLAZED PATIO DOOR
PART OR ASSEMBLY: PARTS LIST

REVISIONS: NO. DATE BY

RW CONSULTING (813) 884-3831

DATE: 02/09/99
SCALE: N.T.S.
DWG. BY: R.P.P.
CHK. BY:
DRAWING NO.: 99-05
SHEET 4 OF 4

ITEM	DESCRIPTION	PART No.	MATERIAL
1	DOOR SKIN (6 PANEL 6'-8") DOOR SKIN (8 PANEL 8'-0")	SAG 52 SAG 54	SMC .090" THK FIBERGLASS SMC .090" THK FIBERGLASS
2	TOP RAIL (6'-8") TOP RAIL (8'-0")	WCA 20 WCA 30	WOOD (MAHOGANY) WOOD (MAHOGANY)
3	HINGE STILE	WCA 30 RU 422	WOOD (MAHOGANY) STEEL (SS 41)
4	LOCK STILE	WCA 30 (TWO PCS) RU 422	WOOD (MAHOGANY) STEEL (SS 41)
5	BOTTOM RAIL	WCA 20 (TWO PCS) PAS 73	WOOD (MAHOGANY) CAST PVC EXTRUSION
7	BUTT HINGE	MAS 01	PVC
8	LATCH LOCK	1 1/4 X	BRASS
9	DEAD BOLT	KWIKSET 200 SERIES	
10	DOOR FRAME	KWIKSET 660 SERIES 1-5/16" WOOD FRAME	WOOD
11	THRESHOLD (OUTSWING)	DDS 850 WEATHERSTRIP OUTSWING BUMPER DDS 850 WEATHERSTRIP	SCHLEGEL Q-LON ALUMINUM / WOOD SCHLEGEL Q-LON
14	FOAM CORE		RIGID URETHANE FOAM CORE
15	JAMB		WOOD BLOCK
16	ANCHOR	#8 X 2-1/2" PAN SMS	STEEL
17	ANCHOR	3/16" X 1-1/4" FH TAPCON	STEEL

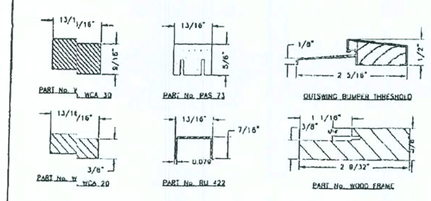

PART No. W WCA 30

PART No. PAS 73

OUTSWING BUMPER THRESHOLD

PART No. W WCA 20

PART No. RU 422

PART No. WOOD FRAME

PART No. SCHLEGEL DDS 850

PLASTPRO, INC.
9 PEACH TREE HILL RD.
LIVINGSTON, NJ 07039

PRODUCT: DISTINCTION SERIES SMC OUTSWING FIBERGLASS GLAZED PATIO DOOR
PART OR ASSEMBLY: PARTS LIST

REVISIONS: NO. DATE BY

RW CONSULTING (813) 884-3831

DATE: 01/08/99
SCALE: N.T.S.
DWG. BY: R.P.P.
CHK. BY:
DRAWING NO.: 99-02
SHEET 4 OF 4

D:\Pc200\The Doors\V8.24-generation

09/03/55

03 JUN 2003