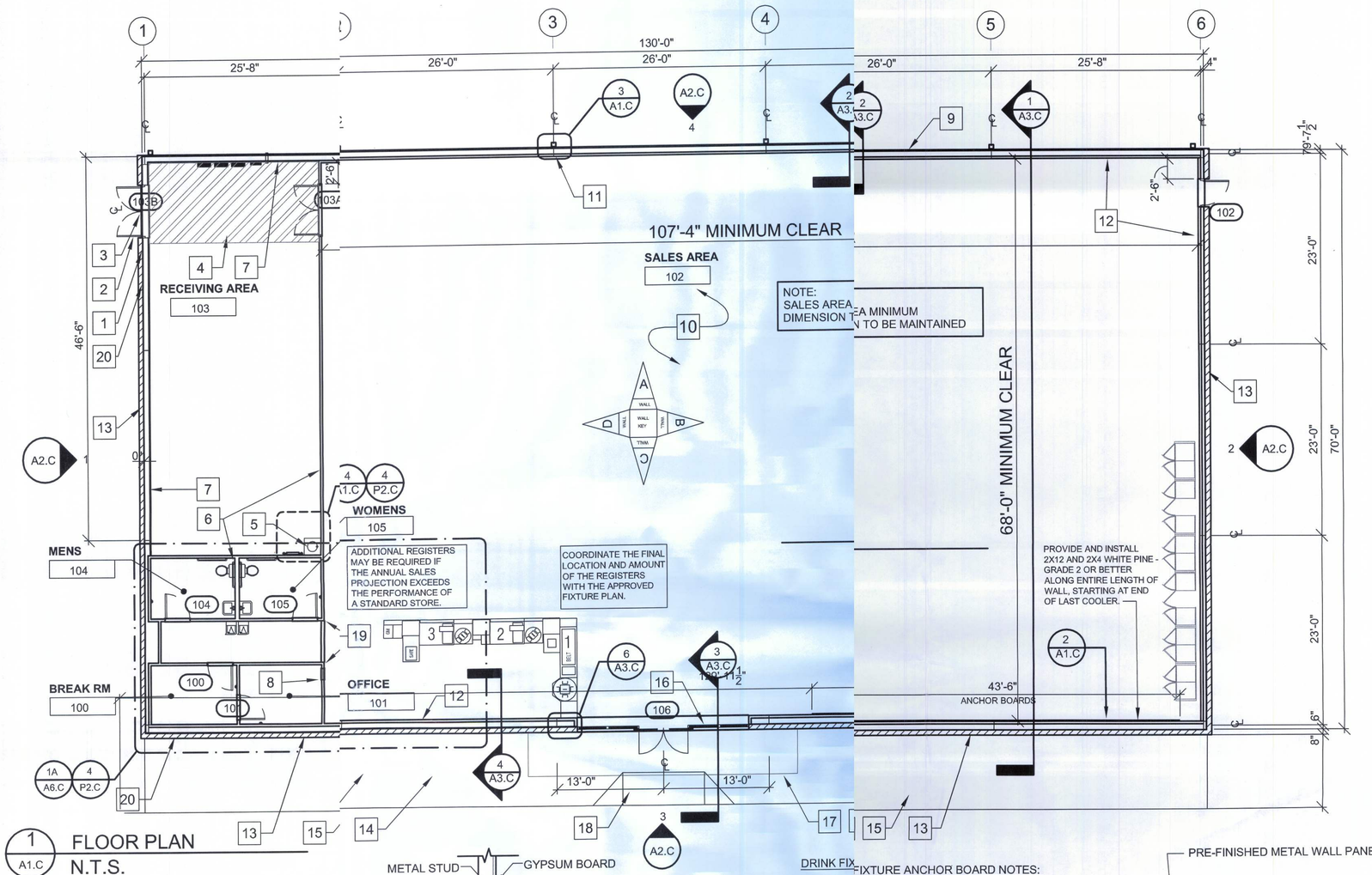

1 A1.C FLOOR PLAN
N.T.S.

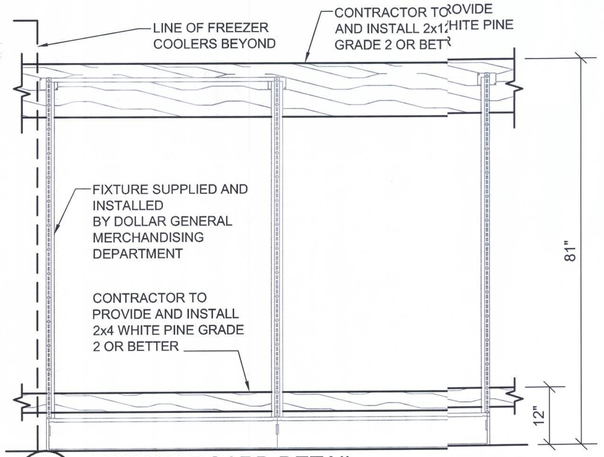

2 A1.C ANCHOR BOARD DETAIL
N.T.S.

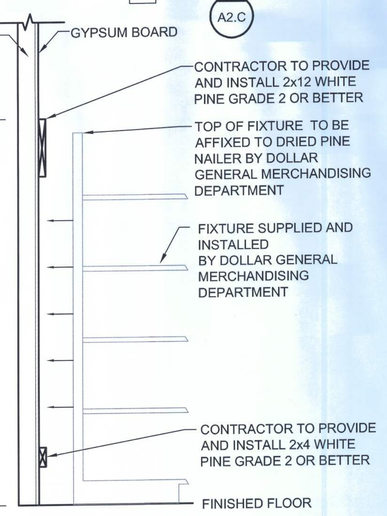

DRINK FIXTURE ANCHOR BOARD NOTES:

1. PROVIDE AND INSTALL 2X12 WHITE PINE - GRADE 2 OR BETTER.
2. PROVIDE AND INSTALL 2X4 WHITE PINE - GRADE 2 OR BETTER.
3. FASTEN THE 2X12 TO THE WALL WITH THE TOP EDGE OF THE BOARD AT 81" A.F.F.
4. FASTEN THE 2X4 TO THE WALL WITH THE TOP EDGE OF THE BOARD AT 12" A.F.F.
5. PRE-DRILL PILOT HOLES IN ALL BOARDS PRIOR TO INSTALLATION TO PREVENT WOOD SPLITS.
6. SECURE PRE THE 2X12 WITH THREE SELF-TAPPING SCREWS PER WALL STUD. MINIMUM SCREW SIZE IS 4"x¼".
7. FASTEN THE 2X4 WITH ONE SELF-TAPPING SCREW PER WALL STUD. MINIMUM SCREW SIZE IS 4"x¼".
8. CAULK THE EDGES OF THE 2X12 AT THE TOP AND BOTTOM WHERE IT MEETS THE WALL PRIOR TO PAINTING.
9. PRIME AND PAINT BOTH BOARDS TO MATCH WALL COLOR.

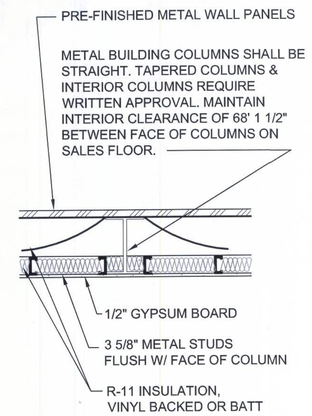

3 A1.C DETAIL @ COLUMN
N.T.S.

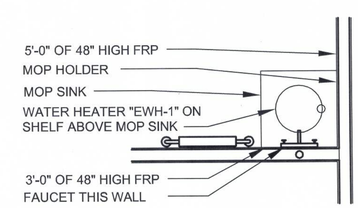

4 A1.C ENLARGED DETAIL
N.T.S. *SEE 4/P2.C ALSO

FLOOR PLAN KEYED NOTES

1. RECEIVING DOOR BUZZER - TORK MDL.#TA725 OR EQUAL
2. 2" DOOR SCOPE, BASS SECURITY DS/1000MB.
3. WEATHER STRIP & LOW PROFILE THRESHOLD - BASS SECURITY NGP 425HD
4. STRIPE FLOOR FOR DESIGNATED EGRESS PATH (PAINT YELLOW)
5. PROVIDE AND INSTALL A TEN GALLON WATER HEATER (OR LARGER IF REQUIRED BY CODE) ABOVE THE MOP SINK.
6. 3 5/8" METAL STUD WITH 1/2" GYP. BD.
7. METAL LINER PANELS TO UNDERSIDE OF ROOF DECK. (BY PRE-ENGINEERED BUILDING MANUFACTURER).
8. 18" x 18" ONE WAY WINDOW @ 36" A.F.F.
9. METAL BUILDING PANELS (BY PRE-ENGINEERED BUILDING MANUFACTURER).
10. CONCRETE SLAB WITH 6X6XW1.4 WELDED WIRE MESH OVER POLYETHYLENE VAPOR BARRIER (MIN. 4 MM THICK) OVER CRUSHED STONE BASE, TYP.
11. ALIGN FACE OF STUDS WITH COLUMN, TYP. AT EXTERIOR WALL. REFER TO DETAIL 2/A3 FOR ADDITIONAL INFORMATION
12. 3 5/8" METAL STUD PARTITION WITH 1/2" GYP. BD. (INFILL EXTERIOR SIDE WITH R-11 BATT INSULATION WITH VAPOR BARRIER).
13. 8" SPLIT-FACED CMU PAINTED SW #7037 BALANCED BEIGE. ALIGN FACE OF BLOCK WITH STEEL GIRT. PROVIDE PROPER ANCHORAGE TO STRUCTURE.
14. SLOPE CONCRETE 1/8" PER FOOT AWAY FROM BUILDING.
15. BROOM FINISH CONCRETE SIDEWALK, TYP.
16. BRONZE STOREFRONT SYSTEM. REFER TO SHEETS A4 AND A5 FOR ADDITIONAL INFORMATION. CONTINUE GYP. BD. TO DECK.
17. LINE OF SOFFIT OR CANOPY ABOVE.
18. A.D.A. COMPLIANT H.C. RAMP WITH YELLOW PAINTED SIDES TO H.C. PARKING STALLS.
19. MC CUE CART AND BUMPER GUARDS 4" A.F.F., ORDER PART TRIMKIT C/D.
20. WALL HYDRANT. REFER TO PLUMBING DRAWINGS FOR ADDITIONAL INFORMATION.

NICHOLAS PAUL GEISLER ARCHITECT
N.C.A.R.B. Certified
Lake City, FL 32055
386/755-9021
CASCO
10877 WATSON ROAD
ST. LOUIS, MO 63127
PHONE: 314-821-1100

DATE:
COMM:
AR0007005

CONCEPT CONSTRUCTION
License#: CGC1515491
ph: 386-755-1887
fx: 386-755-919
295 NW Commons Loop
Suite 115-32
Lake City, FL 32055
www.conceptconstruction.net

DOLLAR GENERAL®
LAKE CITY, FLORIDA
COUNTY RD 247, LAKE CITY, FL
STORE # 12851
2010 PROTOTYPE - PLAN "C" 9,100

DATE	30 MAR 2010
Design	JFB 06/10/10
Revisions	JFB 10/20/10

SHEET NUMBER
A1.C

FLOOR PLAN