30019

ITW Building Components Group, Inc.

1950 Marley Drive Haines City, FL 33844
Florida Engineering Certificate of Authorization Number: 0 278
Florida Certificate of Product Approval # FL1999
Page 1 of 1 Document ID:1UN2487-Z0118163947

DOUGLAS FLEMING LICENSE No. 66648 STATE OF FLORIDA PROFESSIONAL ENGINEER
06/18/2012

Truss Fabricator:	Anderson Truss Company
Job Identification:	12-010rev--BRYAN ZECHER Neely Residence -- 2682 NW Noegel Rd. Lake City, FL
Truss Count:	4
Model Code:	Florida Building Code 2007 and 2009 Supplement
Truss Criteria:	FBC2007Res/TPI-2002(STD)
Engineering Software:	Alpine Software,Version 10.03.
Structural Engineer of Record:	The identity of the structural EOR did not exist as of
Address:	the seal date per section 61G15-31.003(5a) of the FAC
Minimum Design Loads:	Roof - 40.0 PSF @ 1.25 Duration
	Floor - N/A
	Wind - 110 MPH ASCE 7-05 -Closed

Notes:

1. Determination as to the suitability of these truss components for the structure is the responsibility of the building designer/engineer of record, as defined in ANSI/TPI 1
2. The drawing date shown on this index sheet must match the date shown on the individual truss component drawing.
3. As shown on attached drawings; the drawing number is preceded by: HCUSR487

Details: BRCLBSUB-

Douglas Fleming
-Truss Design Engineer-

1950 Marley Drive
Haines City, FL 33844

#	Ref	Description	Drawing#	Date
1	41562-AG	69'10" Specia	12170119	06/18/12
2	41563--EJ7G1		12170116	06/18/12
3	41564-H15A	69'10" Step	12170117	06/18/12
4	41565-DG	35'7" Common	12170118	06/18/12

ALPINE

COLUMBIA COUNTY BUILDING DEPARTMENT
Received for FILE COPY
Code Compliance
PLANS EXAMINER

(12-010rev--BRYAN ZECHER Neely Residence -- 2682 NW Noegel Rd. Lake City, FL 3 - AG 69'10" Special Girder)

Top chord 2x4 SP #1 :T1 2x6 SP #2:
:T2 2x6 SP #1 Dense: :T3 2x4 SP M-30:
Bot chord 2x4 SP #1 :B1 2x6 SP M-26: :B2 2x6 SP SS:
:B3 2x6 SP #2:
Webs 2x4 SP #3 :W1, W18 2x6 SP #2:
:W2, W4, W10, W11, W12, W13 2x4 SP #1: :W16 2x4 SP M-30:

Special loads
------(Lumber Dur.Fac.=1.25 / Plate Dur.Fac.=1.25)
TC- From 62 plf at 0.00 to 62 plf at 9.00
TC- From 62 plf at 9.00 to 62 plf at 17.67
TC- From 62 plf at 17.67 to 62 plf at 28.60
TC- From 62 plf at 28.60 to 62 plf at 53.90
TC- From 62 plf at 53.90 to 62 plf at 69.83
BC- From 20 plf at 0.00 to 20 plf at 9.06
BC- From 10 plf at 9.06 to 10 plf at 10.54
BC- From 20 plf at 10.54 to 20 plf at 50.00
BC- From 20 plf at 50.00 to 20 plf at 69.83
TC- 205.00 lb Conc. Load at 0.00
PLT- 218.26 lb Conc. Load at (9.06,15.12)
PLB- 140.00 lb Conc. Load at (9.06,10.16)
PLB- 5130.23 lb Conc. Load at (10.54,10.16)

Wind loads and reactions based on MWFRS with additional C&C member design.

In lieu of structural panels use purlins to brace all flat TC @ 24" OC.

Bottom chord checked for 10.00 psf non-concurrent live load.

Deflection meets L/240 live and L/180 total load.

This design is based on lumber values in effect prior to June 1, 2012 and shall only be used on projects designed and permitted prior to this date unless specifically approved in writing by the building authority having jurisdiction, the building designer and the project owner.

(**) 1 plate(s) require special positioning. Refer to scaled plate plot details for special positioning requirements.

110 mph wind, 15.64 ft mean hgt, ASCE 7-05, CLOSED bldg, Located anywhere in roof, CAT II, EXP B, wind TC DL=5.0 psf, wind BC DL=5.0 psf. Iw=1.00 GCpi(+/-)=0.18

Left and right cantilevers are exposed to wind

Calculated horizontal deflection is 0.14" due to live load and 0.14" due to dead load.

(a) Continuous lateral bracing equally spaced on member.

WARNING: Furnish a copy of this DWG to the installation contractor. Failure to follow provisions of BCSI in handling and installation of trusses can result in serious injuries. Do not permit inexperienced and uninstructed people to install trusses. See "WARNING" note below. BCSI recommends retaining a registered professional engineer for the design of temporary bracing.

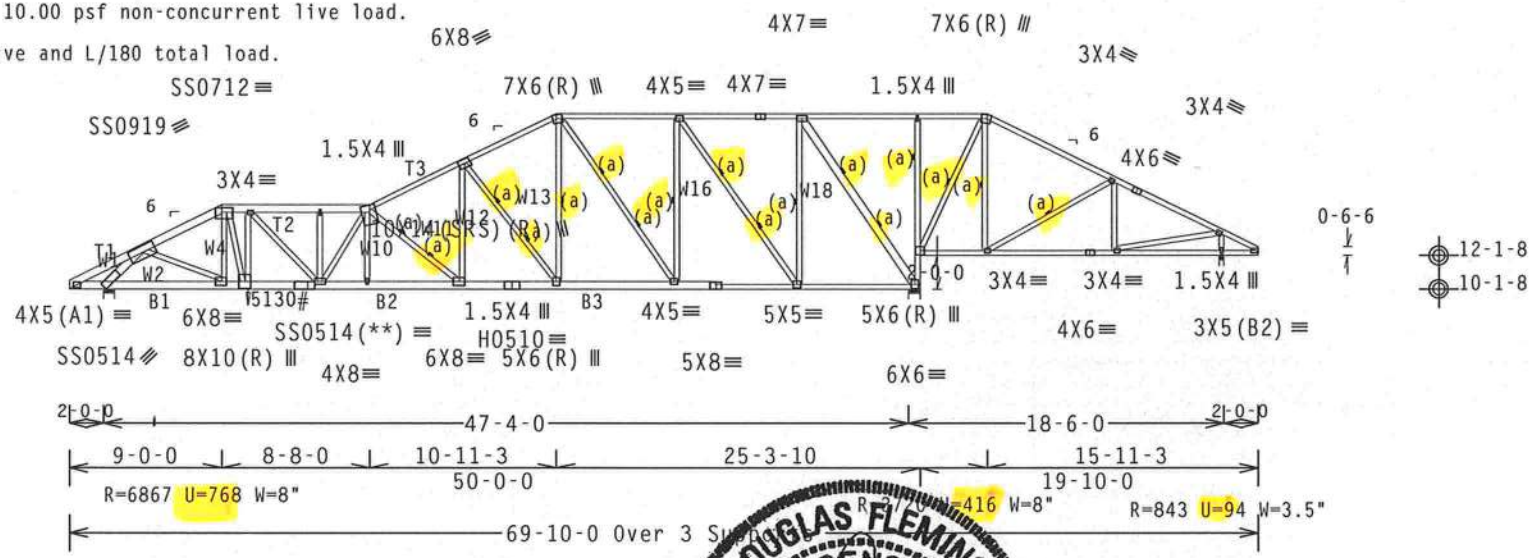

PLT TYP. 20 Gauge HS,18 Gauge HS, Wave Design Crit: FBC2007Res/TPI-2002(STD) FT/RT=10%(0%)/0(0) 10.03.11.0209.20 QTY 1 FL/-/4/-/-/R/- Scale =.09375"/Ft.

ALPINE
ITW Building Components Group Inc.
Haines City, FL 33844
FL COA #0 278

WARNING READ AND FOLLOW ALL NOTES ON THIS SHEET!
IMPORTANT FURNISH THIS DESIGN TO ALL CONTRACTORS INCLUDING INSTALLERS.

Trusses require extreme care in fabricating, handling, shipping, installing and bracing. Refer to and follow the latest edition of BCSI (Building Component Safety Information, by TPI and WTCA) for safety practices prior to performing these functions. Installers shall provide temporary bracing per BCSI. Unless noted otherwise, top chord shall have properly attached structural sheathing and bottom chord shall have a properly attached rigid ceiling. Locations shown for permanent lateral restraint of webs shall have bracing installed per BCSI sections B3, B7 or B10, as applicable.

ITW Building Components Group Inc. (ITWBCG) shall not be responsible for any deviation from this design, any failure to build the truss in conformance with ANSI/TPI 1, or for handling, shipping, installing and bracing of trusses. Apply plates to each face of truss and position as shown above and on the Joint Details, unless noted otherwise. Refer to drawings 160A-Z for standard plate positions. A seal on this drawing or cover page listing this drawing, indicates acceptance of professional engineering responsibility solely for the design shown. The suitability and use of this design for any structure is the responsibility of the Building Designer per ANSI/TPI 1 Sec.2. For more information see: This job's general notes page; ITW-BCG: www.itwbcg.com; TPI: www.tpinst.org; WTCA: www.sbcindustry.com; ICC: www.iccsafe.org

DOUGLAS FLEMING LICENSE No. 66648 STATE OF FLORIDA PROFESSIONAL ENGINEER
06/18/2012

TC LL	20.0 PSF	REF R487-- 41562
TC DL	10.0 PSF	DATE 06/18/12
BC DL	10.0 PSF	DRW HCUSR487 12170119
BC LL	0.0 PSF	HC-ENG DF/DF
TOT.LD.	40.0 PSF	SEQN- 10364
DUR.FAC.	1.25	
SPACING	24.0"	JREF- 1UN2487_Z01

(12-010rev--BRYAN ZECHER Neely Residence -- 2682 NW Noegel Rd. Lake City, FL 3 - EJ7G1)

Top chord 2x4 SP #1
Bot chord 2x6 SP #1 Dense
Webs 2x4 SP #3 :W3 2x4 SP #1:

This design is based on lumber values in effect prior to June 1, 2012 and shall only be used on projects designed and permitted prior to this date unless specifically approved in writing by the building authority having jurisdiction, the building designer and the project owner.

Special loads
------(Lumber Dur.Fac.=1.25 / Plate Dur.Fac.=1.25)
TC- From 62 plf at 0.00 to 62 plf at 7.00
BC- From 10 plf at 0.00 to 10 plf at 7.00
BC- 2637.36 lb Conc. Load at 1.15
BC- 5440.50 lb Conc. Load at 3.15
BC- 2721.00 lb Conc. Load at 5.15

Deflection meets L/240 live and L/180 total load.

2 COMPLETE TRUSSES REQUIRED

Nail Schedule:0.131"x3", min. nails
Top Chord: 1 Row @12.00" o.c.
Bot Chord: 2 Rows @ 2.00" o.c. (Each Row)
Webs : 1 Row @ 4" o.c.
Use equal spacing between rows and stagger nails in each row to avoid splitting.

110 mph wind, 15.00 ft mean hgt, ASCE 7-05, CLOSED bldg, Located anywhere in roof, CAT II, EXP B, wind TC DL=5.0 psf, wind BC DL=5.0 psf. Iw=1.00 GCpi(+/-)=0.18

Wind loads and reactions based on MWFRS with additional C&C member design.

Right end vertical not exposed to wind pressure.

(H1) = (J) Hanger not calculated (1)2x6 SP M-26 supporting member.

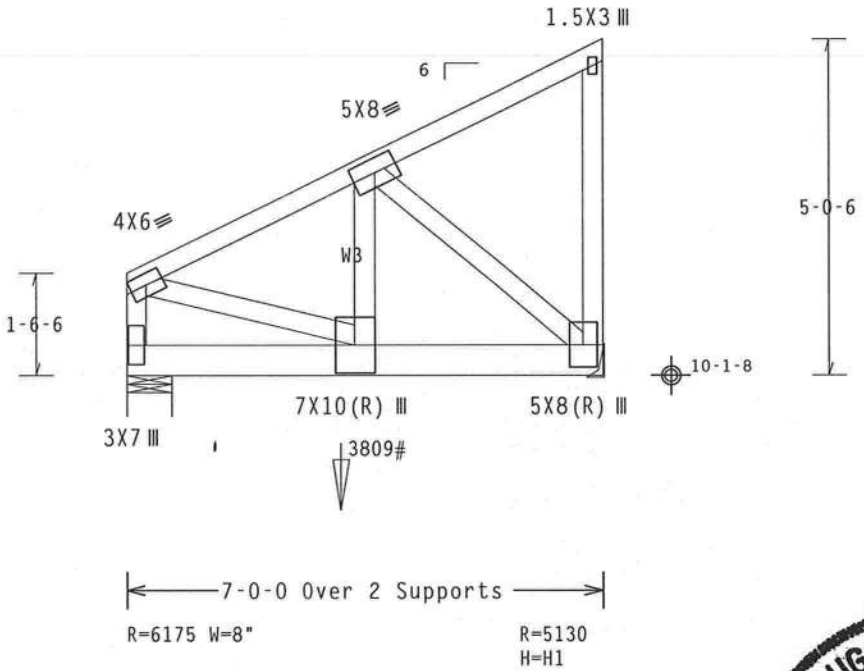

Design Crit: FBC2007Res/TPI-2002(STD)
FT/RT=10%(0%)/0(0)

PLT TYP. Wave

10.09.11 0209.20 QTY: FL/-/4/-/-/R/- Scale =.375"/Ft.

ALPINE
ITW Building Components Group Inc.
Haines City, FL 33844
FL COA #0 278

WARNING READ AND FOLLOW ALL NOTES ON THIS SHEET!
IMPORTANT FURNISH THIS DESIGN TO ALL CONTRACTORS INCLUDING INSTALLERS.

Trusses require extreme care in fabricating, handling, shipping, installing and bracing. Refer to and follow the latest edition of BCSI (Building Component Safety Information, by TPI and WTCA) for recommended practices prior to performing these functions. Installers shall provide temporary bracing per BCSI. Unless noted otherwise, top chord shall have properly attached structural sheathing and bottom chord shall have a properly attached rigid ceiling. Locations shown for permanent lateral restraint of webs shall have bracing installed per BCSI sections B3, B7 or B10, as applicable.

ITW Building Components Group Inc. (ITWBCG) shall not be responsible for any deviation from this design, any failure to build the truss in conformance with ANSI/TPI 1, or for handling, shipping, installation and bracing of trusses. Apply plates to each face of truss and position as shown above and on the Joint Details, unless noted otherwise. Refer to drawings 160A-Z for standard plate positions. A seal on this drawing or cover page listing this drawing, indicates acceptance of professional engineering responsibility solely for the design shown. The suitability and use of this design for any structure is the responsibility of the Building Designer per ANSI/TPI 1 Sec.2. For more information see: This job's general notes page; ITW-BCG: www.itwbcg.com; TPI: www.tpinst.org; WTCA: www.sbcindustry.com; ICC: www.iccsafe.org

DOUGLAS FLEMING LICENSE No.66648 STATE OF FLORIDA PROFESSIONAL ENGINEER
06/18/2012

TC LL	20.0 PSF	REF R487-- 41563
TC DL	10.0 PSF	DATE 06/18/12
BC DL	10.0 PSF	DRW HCUSR487 12170116
BC LL	0.0 PSF	HC-ENG DF/DF
TOT.LD.	40.0 PSF	SEQN- 10283
DUR.FAC.	1.25	
SPACING	24.0"	JREF- 1UN2487_Z01

(12-010rev--BRYAN ZECHER Neely Residence -- 2682 NW Noegel Rd. Lake City, FL 3 - H15A 69'10" Stepdown Hip Girder)

Top chord 2x6 SP #2 :T3, T4, T5 2x6 SP M-26:
Bot chord 2x6 SP SS
Webs 2x4 SP #3 :W2, W15, W17, W21 2x4 SP #1:
:Rt Level Return 2x6 SP #2::Rt Level Return 2x4 SP #3:

Special loads
------(Lumber Dur.Fac.=1.25 / Plate Dur.Fac.=1.25)

TC-	From	62 plf at 0.00 to	62 plf at 10.53		
TC-	From	62 plf at 10.53 to	62 plf at 17.00		
TC-	From	62 plf at 17.00 to	62 plf at 31.00		
TC-	From	62 plf at 31.00 to	62 plf at 45.00		
TC-	From	62 plf at 45.00 to	62 plf at 56.83		
TC-	From	62 plf at 56.83 to	62 plf at 69.83		
BC-	From	20 plf at 0.00 to	20 plf at 14.00		
BC-	From	20 plf at 14.00 to	20 plf at 28.00		
BC-	From	20 plf at 28.00 to	20 plf at 42.00		
BC-	From	10 plf at 42.00 to	10 plf at 46.52		
BC-	From	20 plf at 46.52 to	20 plf at 56.00		
BC-	From	20 plf at 56.00 to	20 plf at 67.83		
PLB-	From	4 plf at 67.87 to	4 plf at 69.79		
BC-	1784.94 lb Conc. Load at 43.90				
BC-	970.45 lb Conc. Load at 46.52				

Wind loads and reactions based on MWFRS with additional C&C member design.

(c) 2x6 #3 or better "T" brace. 80% length of web member. Attach with 16d Box or Gun (0.135"x3.5",min.)nails @ 6" OC.

(e) #3 or better scab brace. Same size & 80% length of web member. Attach with 10d Box or Gun (0.128"x3",min.)nails @ 6" OC.

Deflection meets L/240 live and L/180 total load.

RS1
(1) 2x6X15-1-2 SP SS Bottom chord scab centered 44-4-6 from left end. Attach to one face of chord with (3) rows of 0.131"x3", min. nails @ 6" O.C., staggered 3".

++ Negative reaction(s) of -1465# MAX. (See below) from a non-wind load case requires uplift connection. THE BUILDING DESIGNER MUST APPROVE AND PROVIDE FOR THIS REACTION AND BEARING CONDITION.

This design is based on lumber values in effect prior to June 1, 2012 and shall only be used on projects designed and permitted prior to this date unless specifically approved in writing by the building authority having jurisdiction, the building designer and the project owner.

++ Negative reaction(s) of -1464# MAX. (See below) from a non-wind load case requires uplift connection.

110 mph wind, 15.00 ft mean hgt, ASCE 7-05, CLOSED bldg, not located within 17.00 ft from roof edge, CAT II, EXP B, wind TC DL=5.0 psf, wind BC DL=5.0 psf. Iw=1.00 GCpi(+/-)=0.18

Right end vertical not exposed to wind pressure.

Left cantilever is exposed to wind

Calculated horizontal deflection is 0.14" due to live load and 0.14" due to dead load.

(a) 1x4 #3SRB SPF-S or better "T" brace. 80% length of web member. Attach with 8d Box or Gun (0.113"x2.5",min.)nails @ 6" OC.

(b) 2x4 #3 or better "T" brace. 80% length of web member. Attach with 16d Box or Gun (0.135"x3.5",min.)nails @ 6" OC.

(d) 2x8 #3 or better "T" brace. 80% length of web member. Attach with 16d Box or Gun (0.135"x3.5",min.)nails @ 6" OC.

In lieu of structural panels use purlins to brace all flat TC @ 24" OC.

Bottom chord checked for 10.00 psf non-concurrent live load.

WARNING: Furnish a copy of this DWG to the installation contractor. Failure to follow provisions of BCSI in handling and installation of trusses can result in serious injuries. Do not permit inexperienced and uninstructed people to install trusses. See "WARNING" note below. BCSI recommends retaining a registered professional engineer for the design of temporary bracing.

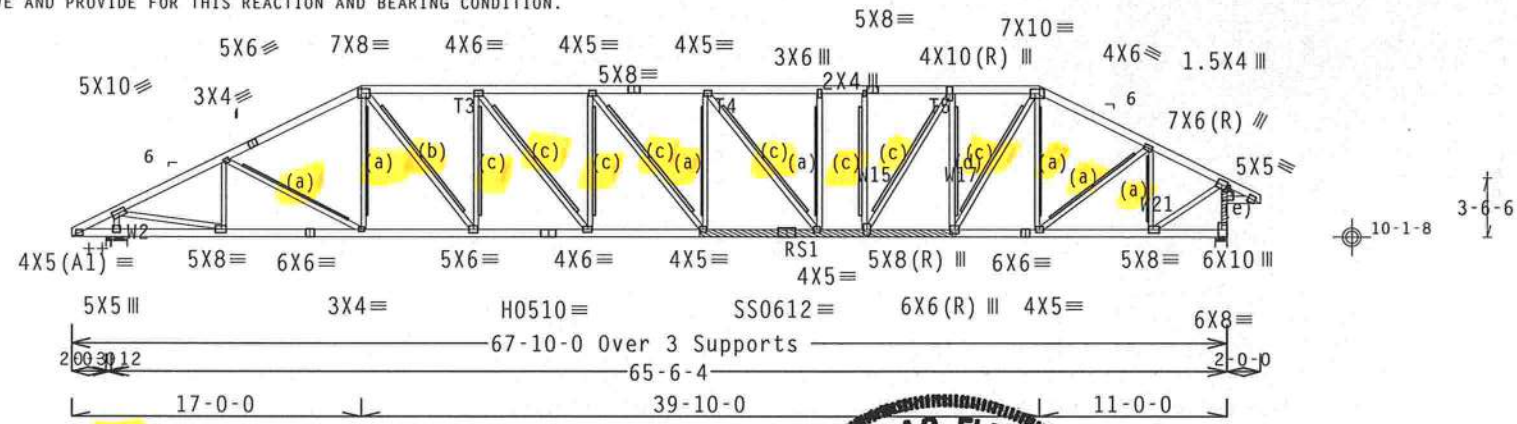

++
R=-1465 Rw=142 U=263 W=3.5"
RL=197/-163 R=5337 U=548 W=11.314"

R=4535 U=500 W=8"

PLT TYP. 20 Gauge HS,18 Gauge HS, Wave
Design Crit: FBC2007Res/TPI-2002(STD) FT/RT=10%(0%)/0(0)
10.03.11.0209.20 QTY: FL/-/4/-/-/R/-
Scale =.09375"/Ft.

ALPINE
ITW Building Components Group Inc.
Haines City, FL 33844
FL COA #0 278

WARNING READ AND FOLLOW ALL NOTES ON THIS SHEET!
IMPORTANT FURNISH THIS DESIGN TO ALL CONTRACTORS INCLUDING INSTALLERS.

Trusses require extreme care in fabricating, handling, shipping, installing and bracing. Refer to and follow the latest edition of BCSI (Building Component Safety Information, by TPI and WTCA) for handling practices prior to performing these functions. Installers shall provide temporary bracing per BCSI. Unless noted otherwise, top chord shall have properly attached structural sheathing and bottom chord shall have a properly attached rigid ceiling. Locations shown for permanent lateral restraint of webs shall have bracing installed per BCSI sections B3, B7 or B10, as applicable.

ITW Building Components Group Inc. (ITWBCG) shall not be responsible for any deviation from this design, any failure to build the truss in conformance with ANSI/TPI 1, or for handling, shipping, installing and bracing of trusses. Apply plates to each face of truss and position as shown above and on the Joint Details, unless noted otherwise. Refer to drawings 160A-Z for standard plate positions. A seal on this drawing or cover page listing this drawing, indicates acceptance of professional engineering responsibility solely for the design shown. The suitability and use of this design for any structure is the responsibility of the Building Designer per ANSI/TPI 1 Sec.2. For more information see: This job's general notes page; ITW-BCG: www.itwbcg.com; TPI: www.tpinst.org; WTCA: www.sbcindustry.com; ICC: www.iccsafe.org

DOUGLAS FLEMING LICENSE No. 66648 STATE OF FLORIDA PROFESSIONAL ENGINEER
06/18/2012

TC LL	20.0 PSF	REF R487-- 41564
TC DL	10.0 PSF	DATE 06/18/12
BC DL	10.0 PSF	DRW HCUSR487 12170117
BC LL	0.0 PSF	HC-ENG DF/DF
TOT.LD.	40.0 PSF	SEQN- 10314
DUR.FAC.	1.25	
SPACING	24.0"	JREF- 1UN2487_Z01

Top chord 2x6 SP M-26 :T3 2x6 SP #2: :T4 2x6 SP SS:
Bot chord 2x6 SP M-26 :B1 2x6 SP #1 Dense:
Webs 2x4 SP #1 :W1, W23 2x6 SP #2:
:W3, W13, W15, W16, W17, W21 2x4 SP #3: :W5, W19 2x4 SP #2:

This design is based on lumber values in effect prior to June 1, 2012 and shall only be used on projects designed and permitted prior to this date unless specifically approved in writing by the building authority having jurisdiction, the building designer and the project owner.

Special loads
------(Lumber Dur.Fac.=1.25 / Plate Dur.Fac.=1.25)
TC- From 62 plf at 0.00 to 62 plf at 35.58
BC- From 829 plf at 0.00 to 829 plf at 35.58
BC- 3318.00 lb Conc. Load at 7.00

110 mph wind, 16.11 ft mean hgt, ASCE 7-05, CLOSED bldg, Located anywhere in roof, CAT II, EXP B, wind TC DL=5.0 psf, wind BC DL=5.0 psf. Iw=1.00 GCpi(+/-)=0.18

Calculated horizontal deflection is 0.31" due to live load and 0.33" due to dead load.

Deflection meets L/240 live and L/180 total load.

4 COMPLETE TRUSSES REQUIRED

Nail Schedule:0.131"x3", min. nails
Top Chord: 1 Row @12.00" o.c.
Bot Chord: 2 Rows @ 4.50" o.c. (Each Row)
Webs : 1 Row @ 4" o.c.
Repeat nailing as each layer is applied. Use equal spacing between rows and stagger nails in each row to avoid splitting.
In addition apply (1) 1/2" bolt at each joint location.
4" o.c. spacing of nails perpendicular and parallel to grain required in area over bearings greater than 4"

(++) - This plate works for both joints covered.

(**) 2 plate(s) require special positioning. Refer to scaled plate plot details for special positioning requirements.

Wind loads and reactions based on MWFRS with additional C&C member design.

Laterally brace chord member above filler @ 24" O.C. or as specified, including a lateral brace at chord ends.

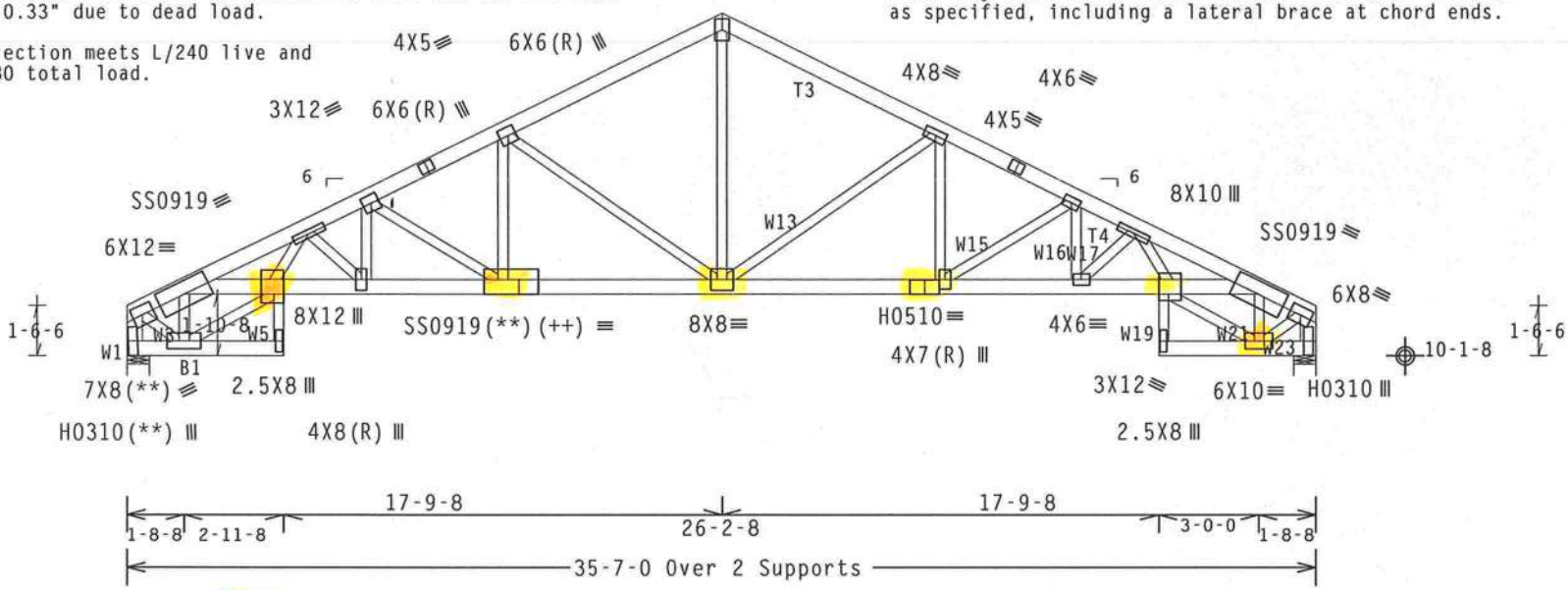

PLT TYP. 20 Gauge HS,18 Gauge HS, Wave
Design Crit: FBC2007Res/TPI-2002(STD) FT/RT=10%(0%)/0(0)
10.03.11.0209.2 QTY 1
FL/-/4/-/-/R/-
Scale =.1875"/Ft.

ALPINE
ITW Building Components Group Inc.
Haines City, FL 33844
FL COA #0 278

WARNING READ AND FOLLOW ALL NOTES ON THIS SHEET!
IMPORTANT FURNISH THIS DESIGN TO ALL CONTRACTORS INCLUDING INSTALLERS.

Trusses require extreme care in fabricating, handling, shipping, installing and bracing. Refer to and follow the latest edition of BCSI (Building Component Safety Information, by TPI and WTCA) for safety practices prior to performing these functions. Installers shall provide temporary bracing per BCSI. Unless noted otherwise, top chord shall have properly attached structural sheathing and bottom chord shall have a properly attached rigid ceiling. Locations shown for permanent lateral restraint of webs shall have bracing installed per BCSI sections B3, B7 or B10, as applicable.

ITW Building Components Group Inc. (ITWBCG) shall not be responsible for any deviation from this design, any failure to build the truss in conformance with ANSI/TPI 1, or for handling, shipping, installing and bracing of trusses. Apply plates to each face of truss and position as shown above and on the Joint Details, unless noted otherwise. Refer to drawings 160A-Z for standard plate positions. A seal on this drawing or cover page listing this drawing, indicates acceptance of professional engineering responsibility solely for the design shown. The suitability and use of this design for any structure is the responsibility of the Building Designer per ANSI/TPI 1 Sec.2. For more information see: This job's general notes page; ITW-BCG: www.itwbcg.com; TPI: www.tpinst.org; WTCA: www.sbcindustry.com; ICC: www.iccsafe.org

DOUGLAS FLEMING
LICENSE
No. 66648
STATE OF FLORIDA
PROFESSIONAL ENGINEER
06/18/2012

TC LL	20.0 PSF	REF R487-- 41565
TC DL	10.0 PSF	DATE 06/18/12
BC DL	10.0 PSF	DRW HCUSR487 12170118
BC LL	0.0 PSF	HC-ENG DF/DF
TOT.LD.	40.0 PSF	SEQN- 10333
DUR.FAC.	1.25	
SPACING	24.0"	JREF- 1UN2487_Z01

CLB WEB BRACE SUBSTITUTION

THIS DETAIL IS TO BE USED WHEN CONTINUOUS LATERAL BRACING (CLB) IS SPECIFIED ON A TRUSS DESIGN BUT AN ALTERNATIVE WEB BRACING METHOD IS DESIRED.

NOTES:

THIS DETAIL IS ONLY APPLICABLE FOR CHANGING THE SPECIFIED CLB SHOWN ON SINGLE PLY SEALED DESIGNS TO T-BRACING OR SCAB BRACING.

ALTERNATIVE BRACING SPECIFIED IN CHART BELOW MAY BE CONSERVATIVE. FOR MINIMUM ALTERNATIVE BRACING, RE-RUN DESIGN WITH APPROPRIATE BRACING.

WEB MEMBER SIZE	SPECIFIED CLB BRACING	ALTERNATIVE BRACING T OR L-BRACE	ALTERNATIVE BRACING SCAB BRACE
2X3 OR 2X4	1 ROW	2X4	1-2X4
2X3 OR 2X4	2 ROWS	2X6	2-2X4
2X6	1 ROW	2X4	1-2X6
2X6	2 ROWS	2X6	2-2X4(*)
2X8	1 ROW	2X6	1-2X8
2X8	2 ROWS	2X6	2-2X6(*)

T-BRACE, L-BRACE AND SCAB BRACE TO BE SAME SPECIES AND GRADE OR BETTER THAN WEB MEMBER UNLESS SPECIFIED OTHERWISE ON ENGINEER'S SEALED DESIGN.

(*) CENTER SCAB ON WIDE FACE OF WEB. APPLY (1) SCAB TO EACH FACE OF WEB.

T-BRACING OR L-BRACING:

APPLY TO EITHER SIDE OF WEB NARROW FACE.
ATTACH WITH 10d BOX OR GUN
(0.128"x 3.",MIN) NAILS.
AT 6" O.C.
BRACE IS A
MINIMUM 80% OF WEB
MEMBER LENGTH

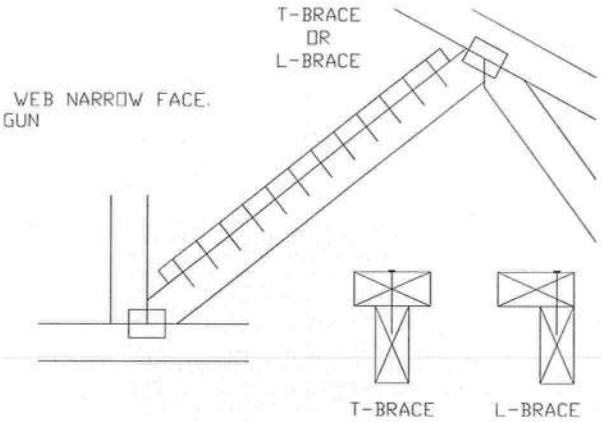

SCAB BRACING:

APPLY SCAB(S) TO WIDE FACE OF WEB.
NO MORE THAN (1) SCAB PER FACE.
ATTACH WITH 10d BOX OR GUN
(0.128"x 3.",MIN) NAILS.
AT 6" O.C.
BRACE IS A MINIMUM
80% OF WEB MEMBER LENGTH

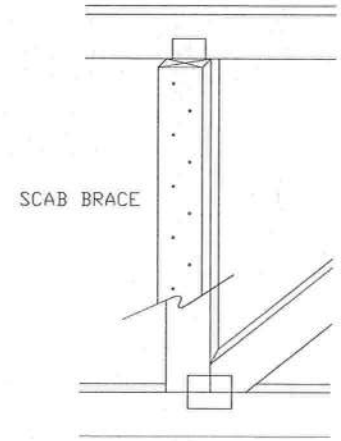

DOUGLAS FLEMING LICENSE No. 66648 STATE OF FLORIDA PROFESSIONAL ENGINEER
06/18/2012

TW Building Components Group Inc.
Earth City, MO 63045

WARNING READ AND FOLLOW ALL NOTES ON THIS SHEET!
Trusses require extreme care in fabricating, handling, shipping, installing and bracing. Refer to and follow BCSI (Building Component Safety Information, by TPI and WTCA) for safety practices prior to performing these functions. Installers shall provide temporary bracing per BCSI. Unless noted otherwise, top chord shall have properly attached structural panels and bottom chord shall have a properly attached rigid ceiling. Locations shown for permanent lateral restraint of webs shall have bracing installed per BCSI sections B3 & B7. See this job's general notes page for more information.

IMPORTANT FURNISH COPY OF THIS DESIGN TO INSTALLATION CONTRACTOR.
ITW Building Components Group Inc. (ITWBCG) shall not be responsible for any deviation from this design, any failure to build the truss in conformance with TPI, or fabricating, handling, shipping, installing & bracing of trusses. ITWBCG connector plates are made of 20/18/16GA (W,H/S/K) ASTM grade 37/40/60 (K/W/H,S) galv. steel. Apply plates to each face of truss, positioned as shown on and on Joint Details.
A seal on this drawing or cover page indicates acceptance and professional engineering responsibility solely for the truss component design shown. The suitability and use of this component for any building is the responsibility of the Building Designer per ANSI/TPI 1 Sec. 2.
ITW-BCG: www.itwbcg.com; TPI: www.tpinst.com; WTCA: www.sbcindustry.com; ICC: www.iccsafe.org

TC LL	PSF	REF	CLB SUBST.
TC DL	PSF	DATE	1/1/09
BC DL	PSF	DRWG	BRCLBSUB0109
BC LL	PSF		
TOT. LD.	PSF		
DUR. FAC.			
SPACING			

ITW Building Components Group, Inc.

1950 Marley Drive Haines City, FL 33844
Florida Engineering Certificate of Authorization Number: 0 278
Florida Certificate of Product Approval # FL1999
 Document ID:1UMZ487-Z0118164432

DOUGLAS FLEMING LICENSE No. 66648 STATE OF FLORIDA PROFESSIONAL ENGINEER
06/18/2012

Truss Fabricator:	Anderson Truss Company
Job Identification:	12-010rev--BRYAN ZECHER Neely Residence -- 2682 NW Noegel Rd. Lake City, FL
Truss Count:	150
Model Code:	Florida Building Code 2007 and 2009 Supplement
Truss Criteria:	FBC2007Res/TPI-2002(STD)
Engineering Software:	Alpine Software,Version 10.03.
Structural Engineer of Record:	The identity of the structural EOR did not exist as of
Address:	the seal date per section 61G15-31.003(5a) of the FAC
Minimum Design Loads:	Roof - 40.0 PSF @ 1.25 Duration
	Floor - N/A
	Wind - 110 MPH ASCE 7-05 -Closed

Notes:

1. Determination as to the suitability of these truss components for the structure is the responsibility of the building designer/engineer of record, as defined in ANSI/TPI 1
2. The drawing date shown on this index sheet must match the date shown on the individual truss component drawing.
3. As shown on attached drawings; the drawing number is preceded by: HCUSR487

Douglas Fleming
-Truss Design Engineer-

1950 Marley Drive
Haines City, FL 33844

Details: BRCLBSUB-PB120-

#	Ref Description	Drawing#	Date
115	29437-H19B 61'2" Stepd	12167028	06/15/12
116	29438-H21B 59'2" Stepd	12167016	06/15/12
117	29439--H11C	12167035	06/15/12
118	29440--H13C	12167037	06/15/12
119	29441--H15C	12167019	06/15/12
120	29442--H17C	12167024	06/15/12
121	29443--H7C	12167002	06/15/12
122	29444--H9C	12167029	06/15/12
123	29445--D	12167015	06/15/12
124	29446--H11D	12167008	06/15/12
125	29447--H13D	12167010	06/15/12
126	29448--H15D	12167013	06/15/12
127	29449--H17D	12167014	06/15/12
128	29450--H7D	12167022	06/15/12
129	29451--H9D	12167039	06/15/12
130	29452--E	12167033	06/15/12
131	29453--ES	12167001	06/15/12
132	29454--ES	12167034	06/15/12
133	29455--CJ1	12167004	06/15/12
134	29456--CJ1C	12167020	06/15/12
135	29457--CJ3	12167042	06/15/12
136	29458--CJ3C	12167030	06/15/12
137	29459--CJ5	12167040	06/15/12
138	29460--EJ7	12167017	06/15/12
139	29461--EJ7S	12167018	06/15/12
140	29462--EJ9	12167041	06/15/12
141	29463--HJ5	12167007	06/15/12
142	29464--HJ7	12167003	06/15/12
143	29465--HJ7C	12167012	06/15/12
144	29466--HJ9	12170112	06/18/12
145	29467--HJ9C	12167036	06/15/12
146	29468--K	12167006	06/15/12
147	29469--KS	12167005	06/15/12
148	29470--MG	12167023	06/15/12
149	29471--M	12167031	06/15/12
150	29472--MS	12167038	06/15/12

ALPINE

COLUMBIA COUNTY BUILDING DEPARTMENT
Received for FILE COPY
Code Compliance
PLANS EXAMINER

Top chord 2x6 SP #2 :T1, T6 2x4 SP #1:
Bot chord 2x6 SP #2
Webs 2x4 SP #3

Left and right cantilevers are exposed to wind

(b) 1x4 #3SRB SPF-S or better "T" brace. 80% length of web member. Attach with 8d Box or Gun (0.113"x2.5",min.)nails @ 6" OC.

(c) 2x6 #3 or better "T" brace. 80% length of web member. Attach with 16d Box or Gun (0.135"x3.5",min.)nails @ 6" OC.

Bottom chord checked for 10.00 psf non-concurrent live load.

WARNING: Furnish a copy of this DWG to the installation contractor. Failure to follow provisions of BCSI in handling and installation of trusses can result in serious injuries. Do not permit inexperienced and uninstructed people to install trusses. See "WARNING" note below. BCSI recommends retaining a registered professional engineer for the design of temporary bracing.

110 mph wind, 15.41 ft mean hgt, ASCE 7-05, CLOSED bldg, not located within 17.00 ft from roof edge, CAT II, EXP B, wind TC DL=5.0 psf, wind BC DL=5.0 psf. Iw=1.00 GCpi(+/-)=0.18

Wind loads and reactions based on MWFRS with additional C&C member design.

(a) 2x4 #3 or better "T" brace. 80% length of web member. Attach with 16d Box or Gun (0.135"x3.5",min.)nails @ 6" OC.

In lieu of structural panels use purlins to brace all flat TC @ 24" OC.

Deflection meets L/240 live and L/180 total load.

MWFRS loads based on trusses located at least 15.41 ft. from roof edge.

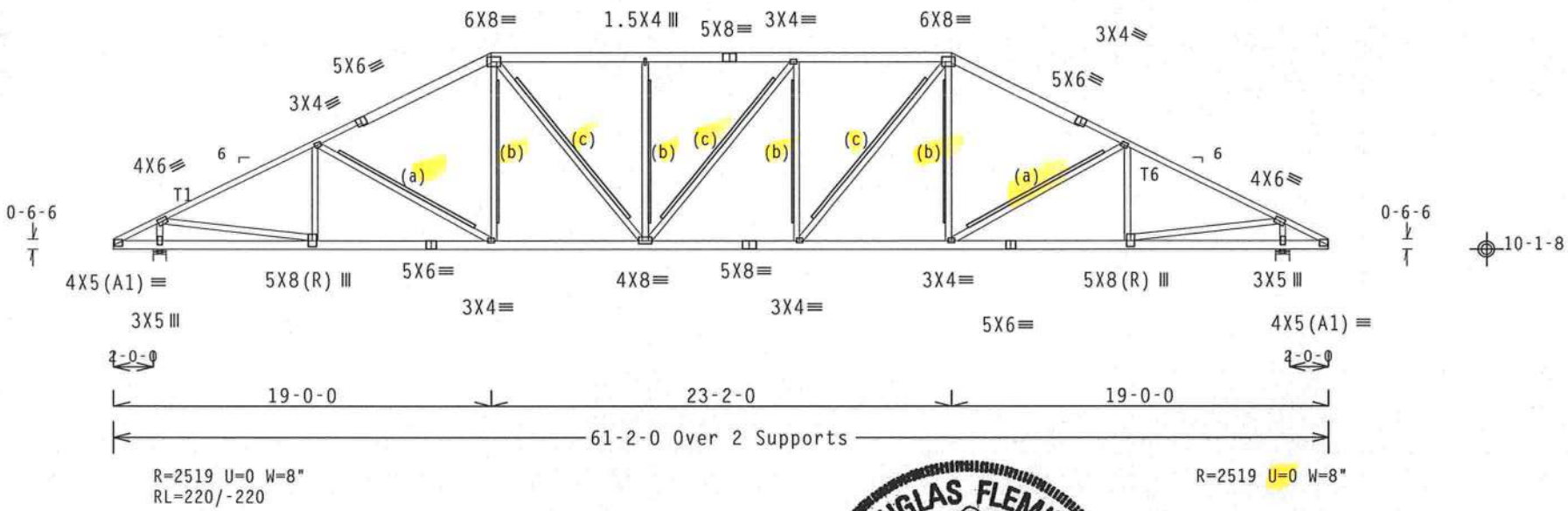

Design Crit: FBC2007Res/TPI-2002(STD)

PLT TYP. Wave | FT/RT=10%(0%)/0(0) | 10.03.04.0601.16 | QTY 1 | FL/-/4/-/-/R/- | Scale =.125"/Ft.

ALPINE
ITW Building Components Group Inc.
Haines City, FL 33844
FL COA #0 278

WARNING READ AND FOLLOW ALL NOTES ON THIS SHEET!
IMPORTANT FURNISH THIS DESIGN TO ALL CONTRACTORS INCLUDING INSTALLERS.

Trusses require extreme care in fabricating, handling, shipping, installing and bracing. Refer to and follow the latest edition of BCSI (Building Component Safety Information, by TPI and WTCA) for general practices prior to performing these functions. Installers shall provide temporary bracing per BCSI. Unless noted otherwise, top chord shall have properly attached structural sheathing and bottom chord shall have a properly attached rigid ceiling. Locations shown for permanent lateral restraint of webs shall have bracing installed per BCSI sections B3, B7 or B10, as applicable.

ITW Building Components Group Inc. (ITWBCG) shall not be responsible for any deviation from this design, any failure to build the truss in conformance with ANSI/TPI 1, or for handling, shipping, installing and bracing of trusses. Apply plates to each face of truss and position as shown above and on the Joint Details, unless noted otherwise. Refer to drawings 160A-Z for standard plate positions. A seal on this drawing or cover page listing this drawing, indicates acceptance of professional engineering responsibility solely for the design shown. The suitability and use of this design for any structure is the responsibility of the Building Designer per ANSI/TPI 1 Sec.2. For more information see: This job's general notes page; ITW-BCG: www.itwbcg.com; TPI: www.tpinst.org; WTCA: www.sbcindustry.com; ICC: www.iccsafe.org

DOUGLAS FLEMING LICENSE No. 66648 STATE OF FLORIDA PROFESSIONAL ENGINEER
06/18/2012

TC LL	20.0 PSF	REF	R487-- 29437
TC DL	10.0 PSF	DATE	06/15/12
BC DL	10.0 PSF	DRW	HCUSR487 12167028
BC LL	0.0 PSF	HC-ENG	DF/DF
TOT.LD.	40.0 PSF	SEQN-	262397
DUR.FAC.	1.25		
SPACING	24.0"	JREF-	1UMZ487_Z01

Top chord 2x6 SP #2 :T1, T6 2x4 SP #1:
Bot chord 2x6 SP #2
Webs 2x4 SP #3 :W2, W16 2x4 SP #2:

Left cantilever is exposed to wind

(a) 1x4 #3SRB SPF-S or better "T" brace. 80% length of web member. Attach with 8d Box or Gun (0.113"x2.5",min.)nails @ 6" OC.

(c) 2x6 #3 or better "T" brace. 80% length of web member. Attach with 16d Box or Gun (0.135"x3.5",min.)nails @ 6" OC.

Truss passed check for 20 psf additional bottom chord live load in areas with 42"-high x 24"-wide clearance.

Deflection meets L/240 live and L/180 total load.

MWFRS loads based on trusses located at least 15.91 ft. from roof edge.

110 mph wind, 15.91 ft mean hgt, ASCE 7-05, CLOSED bldg, not located within 13.00 ft from roof edge, CAT II, EXP B, wind TC DL=5.0 psf, wind BC DL=5.0 psf. Iw=1.00 GCpi(+/-)=0.18

Wind loads and reactions based on MWFRS with additional C&C member design.

(b) 2x4 #3 or better "T" brace. 80% length of web member. Attach with 16d Box or Gun (0.135"x3.5",min.)nails @ 6" OC.

In lieu of structural panels use purlins to brace all flat TC @ 24" OC.

Bottom chord checked for 10.00 psf non-concurrent live load.

WARNING: Furnish a copy of this DWG to the installation contractor. Special care must be taken during handling, shipping and installation of trusses. See "WARNING" note below.

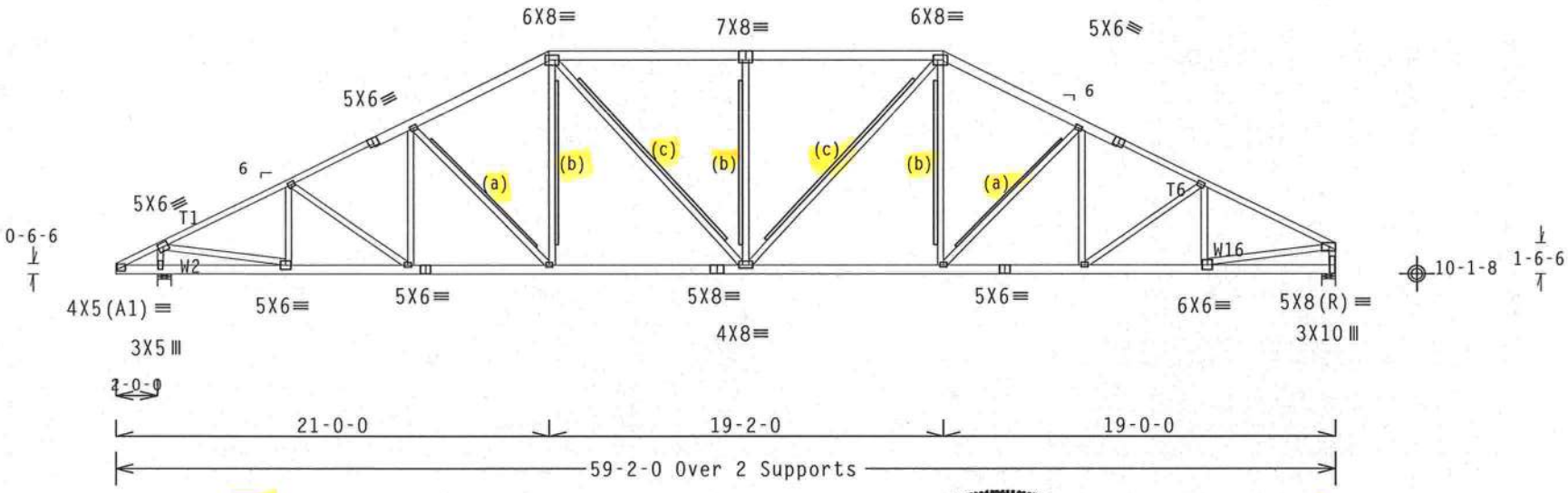

Note: All Plates Are 3X4 Except As Shown.

Design Crit: FBC2007Res/TPI-2002(STD)

PLT TYP. Wave FT/RT=10%(0%)/0(0) 10.03.04.0601.16 QTY: FL/-/4/-/-/R/- Scale =.125"/Ft.

ALPINE
ITW Building Components Group Inc.
Haines City, FL 33844
FL COA #0 278

WARNING READ AND FOLLOW ALL NOTES ON THIS SHEET!
IMPORTANT FURNISH THIS DESIGN TO ALL CONTRACTORS INCLUDING INSTALLERS.

Trusses require extreme care in fabricating, handling, shipping, installing and bracing. Refer to and follow the latest edition of BCSI (Building Component Safety Information, by TPI and WTCA) for general practices prior to performing these functions. Installers shall provide temporary bracing per BCSI. Unless noted otherwise, top chord shall have properly attached structural sheathing and bottom chord shall have a properly attached rigid ceiling. Locations shown for permanent lateral restraint of webs shall have bracing installed per BCSI sections B3, B7 or B10, as applicable.

ITW Building Components Group Inc. (ITWBCG) shall not be responsible for any deviation from this design, any failure to build the truss in conformance with ANSI/TPI 1, or for handling, shipping, installing and bracing of trusses. Apply plates to each face of truss and position as shown above and on the Joint Details, unless noted otherwise. Refer to drawings 160A-Z for standard plate positions. A seal on drawing or cover page listing this drawing, indicates acceptance of professional engineering responsibility solely for the design shown. The suitability and use of this design for any structure is the responsibility of the Building Designer per ANSI/TPI 1 Sec.2. For more information see: This job's general notes page; ITW-BCG: www.itwbcg.com; TPI: www.tpinst.org; WTCA: www.sbcindustry.com; ICC: www.iccsafe.org

DOUGLAS FLEMING LICENSE No. 66648 STATE OF FLORIDA PROFESSIONAL ENGINEER
06/18/2012

TC LL	20.0 PSF	REF R487-- 29438
TC DL	10.0 PSF	DATE 06/15/12
BC DL	10.0 PSF	DRW HCUSR487 12167016
BC LL	0.0 PSF	HC-ENG DF/DF
TOT.LD.	40.0 PSF	SEQN- 262454
DUR.FAC.	1.25	
SPACING	24.0"	JREF- 1UMZ487_Z01

Top chord 2x4 SP #1
Bot chord 2x4 SP #1
Webs 2x4 SP #3

Left and right cantilevers are exposed to wind

(b) 1x4 #3SRB SPF-S or better "T" brace. 80% length of web member. Attach with 8d Box or Gun (0.113"x2.5",min.)nails @ 6" OC.

In lieu of structural panels use purlins to brace all flat TC @ 24" OC.

Deflection meets L/240 live and L/180 total load.

MWFRS loads based on trusses located at least 7.50 ft. from roof edge.

110 mph wind, 15.00 ft mean hgt, ASCE 7-05, CLOSED bldg, not located within 13.00 ft from roof edge, CAT II, EXP B, wind TC DL=5.0 psf, wind BC DL=5.0 psf. Iw=1.00 GCpi(+/-)=0.18

Wind loads and reactions based on MWFRS with additional C&C member design.

(a) 2x6 #3 or better "T" brace. 80% length of web member. Attach with 16d Box or Gun (0.135"x3.5",min.)nails @ 6" OC.

Bottom chord checked for 10.00 psf non-concurrent live load.

WARNING: Furnish a copy of this DWG to the installation contractor. Special care must be taken during handling, shipping and installation of trusses. See "WARNING" note below.

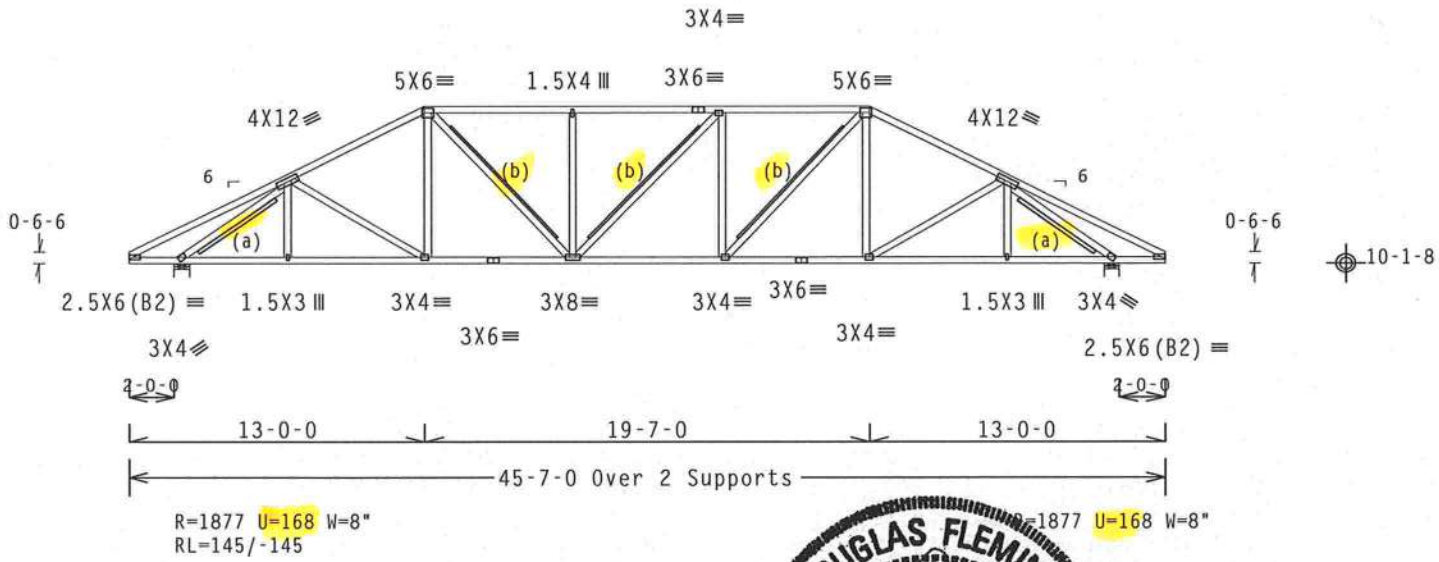

Design Crit: FBC2007Res/TPI-2002(STD)
FT/RT=10%(0%)/0(0)

PLT TYP. Wave

10.04.04 0603.16 QTY: FL/-/4/-/-/R/- Scale =.125"/Ft.

ALPINE
ITW Building Components Group Inc.
Haines City, FL 33844
FL COA #0 278

WARNING READ AND FOLLOW ALL NOTES ON THIS SHEET!
IMPORTANT FURNISH THIS DESIGN TO ALL CONTRACTORS INCLUDING INSTALLERS.

Trusses require extreme care in fabricating, handling, shipping, installing and bracing. Refer to and follow the latest edition of BCSI (Building Component Safety Information, by TPI and WTCA) for good practices prior to performing these functions. Installers shall provide temporary bracing per BCSI. Unless noted otherwise, top chord shall have properly attached structural sheathing and bottom chord shall have a properly attached rigid ceiling. Locations shown for permanent lateral restraint of webs shall have bracing installed per BCSI sections B3, B7 or B10, as applicable.

ITW Building Components Group Inc. (ITWBCG) shall not be responsible for any deviation from this design, any failure to build the truss in conformance with ANSI/TPI 1, or for handling, shipping, installation and bracing of trusses. Apply plates to each face of truss and position as shown above and on the Joint Details, unless noted otherwise. Refer to drawings 160A-Z for standard plate positions. A seal on this drawing or cover page listing this drawing, indicates acceptance of professional engineering responsibility solely for the design shown. The suitability and use of this design for any structure is the responsibility of the Building Designer per ANSI/TPI 1 Sec.2. For more information see: This job's general notes page; ITW-BCG: www.itwbcg.com; TPI: www.tpinst.org; WTCA: www.sbcindustry.com; ICC: www.iccsafe.org

DOUGLAS FLEMING LICENSE No. 66648 STATE OF FLORIDA PROFESSIONAL ENGINEER

06/18/2012

TC LL	20.0 PSF	REF R487-- 29439
TC DL	10.0 PSF	DATE 06/15/12
BC DL	10.0 PSF	DRW HCUSR487 12167035
BC LL	0.0 PSF	HC-ENG DF/DF
TOT.LD.	40.0 PSF	SEQN- 263210
DUR.FAC.	1.25	
SPACING	24.0"	JREF- 1UMZ487_Z01

Top chord 2x4 SP #1
Bot chord 2x4 SP #1
Webs 2x4 SP #3

Left and right cantilevers are exposed to wind

(a) 1x4 #3SRB SPF-S or better "T" brace. 80% length of web member. Attach with 8d Box or Gun (0.113"x2.5",min.)nails @ 6" OC.

Bottom chord checked for 10.00 psf non-concurrent live load.

WARNING: Furnish a copy of this DWG to the installation contractor. Special care must be taken during handling, shipping and installation of trusses. See "WARNING" note below.

110 mph wind, 15.00 ft mean hgt, ASCE 7-05, CLOSED bldg, not located within 13.00 ft from roof edge, CAT II, EXP B, wind TC DL=5.0 psf, wind BC DL=5.0 psf. Iw=1.00 GCpi(+/-)=0.18

Wind loads and reactions based on MWFRS with additional C&C member design.

In lieu of structural panels use purlins to brace all flat TC @ 24" OC.

Deflection meets L/240 live and L/180 total load.

MWFRS loads based on trusses located at least 15.00 ft. from roof edge.

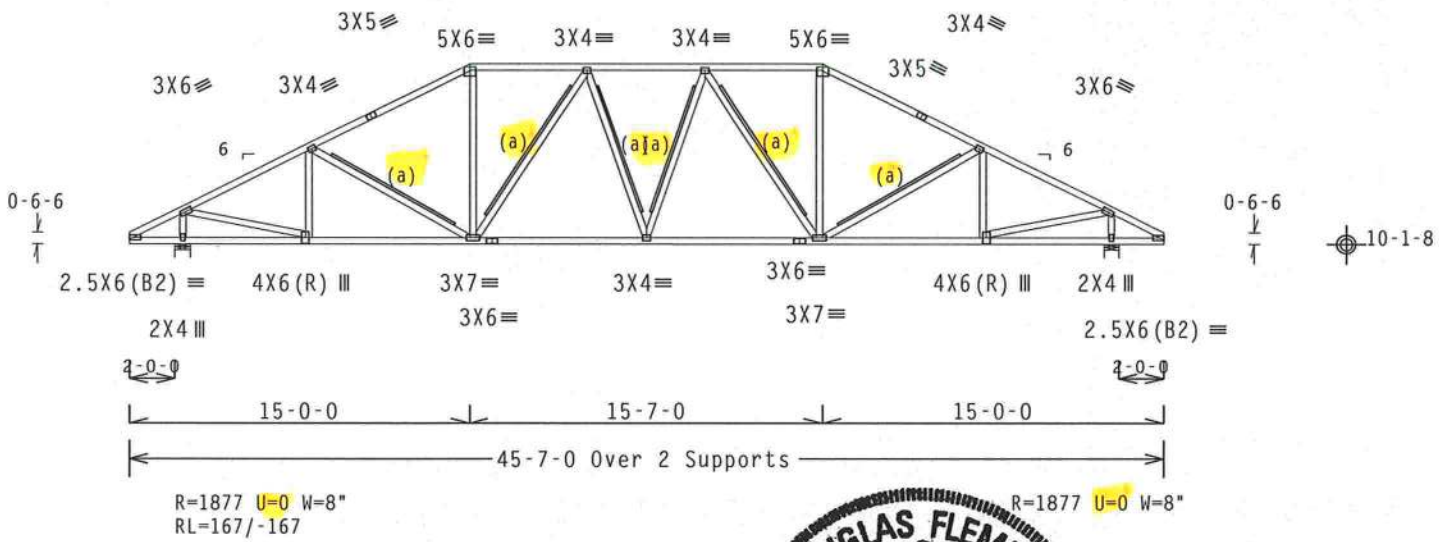

Design Crit: FBC2007Res/TPI-2002(STD)
FT/RT=10%(0%)/0(0)

PLT TYP. Wave

10.03.04.0601.16 QTY 1

FL/-/4/-/-/R/-

Scale =.125"/Ft.

ALPINE
ITW Building Components Group Inc.
Haines City, FL 33844
FL COA #0 278

WARNING READ AND FOLLOW ALL NOTES ON THIS SHEET!
IMPORTANT FURNISH THIS DESIGN TO ALL CONTRACTORS INCLUDING INSTALLERS.

Trusses require extreme care in fabricating, handling, shipping, installing and bracing. Refer to and follow the latest edition of BCSI (Building Component Safety Information, by TPI and WTCA) for safety practices prior to performing these functions. Installers shall provide temporary bracing per BCSI. Unless noted otherwise, top chord shall have properly attached structural sheathing and bottom chord shall have a properly attached rigid ceiling. Locations shown for permanent lateral restraint of webs shall have bracing installed per BCSI sections B3, B7 or B10, as applicable.

ITW Building Components Group Inc. (ITWBCG) shall not be responsible for any deviation from this design, any failure to build the truss in conformance with ANSI/TPI 1, or for handling, shipping, installing and bracing of trusses. Apply plates to each face of truss and position as shown above and on the Joint Details, unless noted otherwise. Refer to drawings 160A-Z for standard plate positions. A seal on this drawing or cover page listing this drawing, indicates acceptance of professional engineering responsibility solely for the design shown. The suitability and use of this design for any structure is the responsibility of the Building Designer per ANSI/TPI 1 Sec.2. For more information see: This job's general notes page; ITW-BCG: www.itwbcg.com; TPI: www.tpinst.org; WTCA: www.sbcindustry.com; ICC: www.iccsafe.org

DOUGLAS FLEMING
LICENSE
No. 66648
STATE OF
FLORIDA
PROFESSIONAL ENGINEER

06/18/2012

TC LL	20.0 PSF	REF R487-- 29440
TC DL	10.0 PSF	DATE 06/15/12
BC DL	10.0 PSF	DRW HCUSR487 12167037
BC LL	0.0 PSF	HC-ENG DF/DF
TOT.LD.	40.0 PSF	SEQN- 263223
DUR.FAC.	1.25	
SPACING	24.0"	JREF- 1UMZ487_Z01

THIS DWG PREPARED FROM COMPUTER INPUT (LOADS & DIMENSIONS) SUBMITTED BY TRUSS MFR.

Top chord 2x4 SP #1
Bot chord 2x4 SP #1
Webs 2x4 SP #3

Left and right cantilevers are exposed to wind

(a) 1x4 #3SRB SPF-S or better "T" brace. 80% length of web member. Attach with 8d Box or Gun (0.113"x2.5",min.)nails @ 6" OC.

In lieu of structural panels use purlins to brace all flat TC @ 24" OC.

Deflection meets L/240 live and L/180 total load.

MWFRS loads based on trusses located at least 15.00 ft. from roof edge.

110 mph wind, 15.00 ft mean hgt, ASCE 7-05, CLOSED bldg, not located within 13.00 ft from roof edge, CAT II, EXP B, wind TC DL=5.0 psf, wind BC DL=5.0 psf. Iw=1.00 GCpi(+/-)=0.18

Wind loads and reactions based on MWFRS with additional C&C member design.

(b) 2x4 #3 or better "T" brace. 80% length of web member. Attach with 16d Box or Gun (0.135"x3.5",min.)nails @ 6" OC.

Bottom chord checked for 10.00 psf non-concurrent live load.

WARNING: Furnish a copy of this DWG to the installation contractor. Special care must be taken during handling, shipping and installation of trusses. See "WARNING" note below.

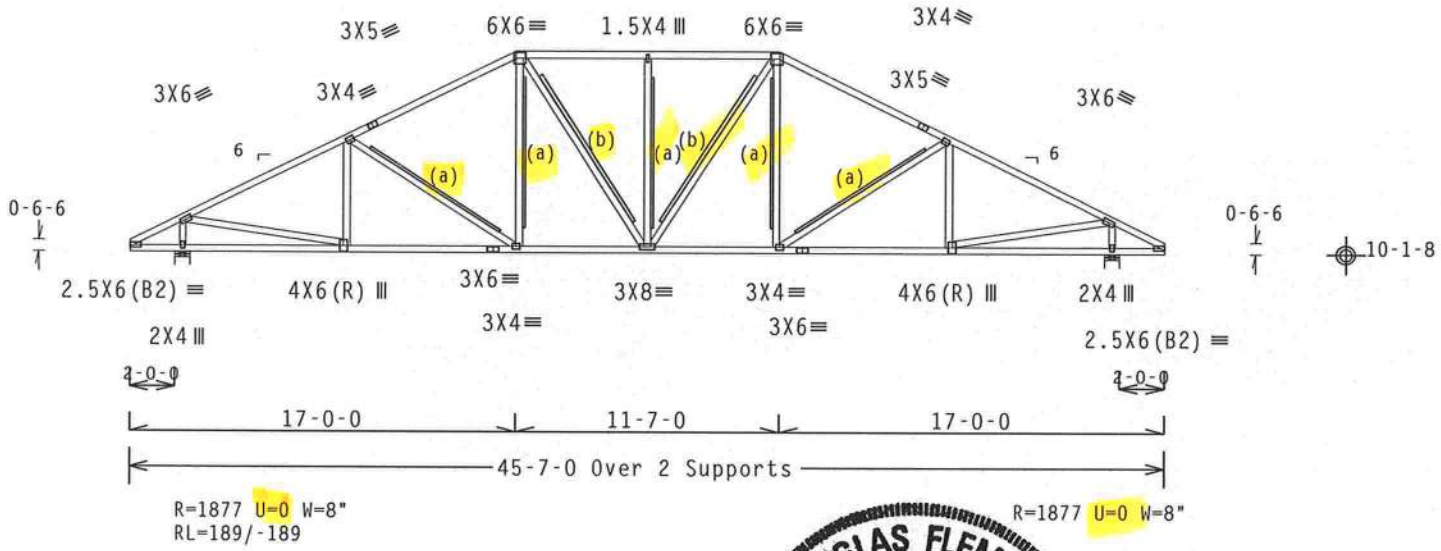

Design Crit: FBC2007Res/TPI-2002(STD)
FT/RT=10%(0%)/0(0)

PLT TYP. Wave

10.03.04.0601.16 QTY 1

FL/-/4/-/-/R/-

Scale =.125"/Ft.

ALPINE
ITW Building Components Group Inc.
Haines City, FL 33844
FL COA #0 278

WARNING READ AND FOLLOW ALL NOTES ON THIS SHEET!
IMPORTANT FURNISH THIS DESIGN TO ALL CONTRACTORS INCLUDING INSTALLERS.

Trusses require extreme care in fabricating, handling, shipping, installing and bracing. Refer to and follow the latest edition of BCSI (Building Component Safety Information, by TPI and WTCA) for safety practices prior to performing these functions. Installers shall provide temporary bracing per BCSI. Unless noted otherwise, top chord shall have properly attached structural sheathing and bottom chord shall have a properly attached rigid ceiling. Locations shown for permanent lateral restraint of webs shall have bracing installed per BCSI sections B3, B7 or B10, as applicable.

ITW Building Components Group Inc. (ITWBCG) shall not be responsible for any deviation from this design, any failure to build the truss in conformance with ANSI/TPI 1, or for handling, shipping, installing and bracing of trusses. Apply plates to each face of truss and position as shown above and on the Joint Details, unless noted otherwise. Refer to drawings 160A-Z for standard plate positions. A seal on this drawing or cover page listing this drawing, indicates acceptance of professional engineering responsibility solely for the design shown. The suitability and use of this design for any structure is the responsibility of the Building Designer per ANSI/TPI 1 Sec.2. For more information see: This job's general notes page; ITW-BCG: www.itwbcg.com; TPI: www.tpinst.org; WTCA: www.sbcindustry.com; ICC: www.iccsafe.org

DOUGLAS FLEMING LICENSE No. 66648 STATE OF FLORIDA PROFESSIONAL ENGINEER

06/18/2012

TC LL	20.0 PSF	REF R487-- 29441
TC DL	10.0 PSF	DATE 06/15/12
BC DL	10.0 PSF	DRW HCUSR487 12167019
BC LL	0.0 PSF	HC-ENG DF/DF
TOT.LD.	40.0 PSF	SEQN- 263235
DUR.FAC.	1.25	
SPACING	24.0"	JREF- 1UMZ487_Z01

Top chord 2x4 SP #1
Bot chord 2x4 SP #1
Webs 2x4 SP #3

Left cantilever is exposed to wind

(a) 1x4 #3SRB SPF-S or better "T" brace. 80% length of web member. Attach with 8d Box or Gun (0.113"x2.5",min.)nails @ 6" OC.

(c) 2x6 #3 or better "T" brace. 80% length of web member. Attach with 16d Box or Gun (0.135"x3.5",min.)nails @ 6" OC.

Bottom chord checked for 10.00 psf non-concurrent live load.

MWFRS loads based on trusses located at least 15.41 ft. from roof edge.

110 mph wind, 15.41 ft mean hgt, ASCE 7-05, CLOSED bldg, not located within 13.00 ft from roof edge, CAT II, EXP B, wind TC DL=5.0 psf, wind BC DL=5.0 psf. Iw=1.00 GCpi(+/-)=0.18

Wind loads and reactions based on MWFRS with additional C&C member design.

(b) 2x4 #3 or better "T" brace. 80% length of web member. Attach with 16d Box or Gun (0.135"x3.5",min.)nails @ 6" OC.

In lieu of structural panels use purlins to brace all flat TC @ 24" OC.

Deflection meets L/240 live and L/180 total load.

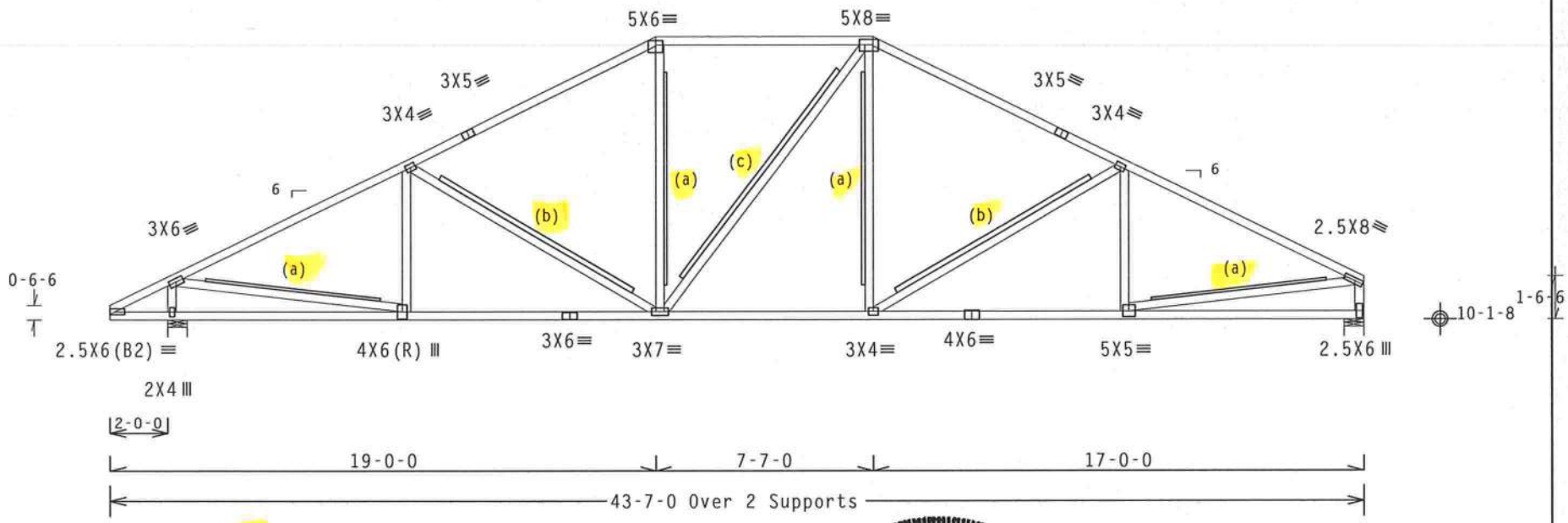

Design Crit: FBC2007Res/TPI-2002(STD)

PLT TYP. Wave FT/RT=10%(0%)/0(0) 10.04.0603.16 QTY:

FL/-/4/-/-/R/- Scale =.1875"/Ft.

TC LL	20.0 PSF	REF R487-- 29442
TC DL	10.0 PSF	DATE 06/15/12
BC DL	10.0 PSF	DRW HCUSR487 12167024
BC LL	0.0 PSF	HC-ENG DF/DF
TOT.LD.	40.0 PSF	SEQN- 263257
DUR.FAC.	1.25	
SPACING	24.0"	JREF- 1UMZ487_Z01

ALPINE
ITW Building Components Group Inc.
Haines City, FL 33844
FL COA #0 278

WARNING READ AND FOLLOW ALL NOTES ON THIS SHEET!
IMPORTANT FURNISH THIS DESIGN TO ALL CONTRACTORS INCLUDING INSTALLERS.

Trusses require extreme care in fabricating, handling, shipping, installing and bracing. Refer to and follow the latest edition of BCSI (Building Component Safety Information, by TPI and WTCA) for recommended practices prior to performing these functions. Installers shall provide temporary bracing per BCSI. Unless noted otherwise, top chord shall have properly attached structural sheathing and bottom chord shall have a properly attached rigid ceiling. Locations shown for permanent lateral restraint of webs shall have bracing installed per BCSI sections B3, B7 or B10, as applicable.

ITW Building Components Group Inc. (ITWBCG) shall not be responsible for any deviation from this design, any failure to build the truss in conformance with ANSI/TPI 1, or for handling, shipping, installation and bracing of trusses. Apply plates to each face of truss and position as shown above and on the Joint Details, unless noted otherwise. Refer to drawings 160A-Z for standard plate positions. A seal on this drawing or cover page listing this drawing, indicates acceptance of professional engineering responsibility solely for the design shown. The suitability and use of this design for any structure is the responsibility of the Building Designer per ANSI/TPI 1 Sec.2. For more information see: This job's general notes page; ITW-BCG: www.itwbcg.com; TPI: www.tpinst.org; WTCA: www.sbcindustry.com; ICC: www.iccsafe.org

DOUGLAS FLEMING LICENSE No.66648 STATE OF FLORIDA PROFESSIONAL ENGINEER

06/18/2012

Top chord 2x4 SP #1 :T2, T3 2x6 SP #2:
Bot chord 2x6 SP #2
Webs 2x4 SP #3

Left and right cantilevers are exposed to wind

(a) 1x4 #3SRB SPF-S or better "T" brace. 80% length of web member. Attach with 8d Box or Gun (0.113"x2.5",min.)nails @ 6" OC.

In lieu of structural panels use purlins to brace all flat TC @ 24" OC.

Left side jacks have 9-0-0 setback with 2-0-0 cant and 0-0-0 overhang. End jacks have 9-0-0 setback with 2-0-0 cant and 0-0-0 overhang. Right side jacks have 9-0-0 setback with 2-0-0 cant and 0-0-0 overhang.

110 mph wind, 15.00 ft mean hgt, ASCE 7-05, CLOSED bldg, Located anywhere in roof, CAT II, EXP B, wind TC DL=5.0 psf, wind BC DL=5.0 psf. Iw=1.00 GCpi(+/-)=0.18

Wind loads and reactions based on MWFRS with additional C&C member design.

(b) 2x6 #3 or better "T" brace. 80% length of web member. Attach with 16d Box or Gun (0.135"x3.5",min.)nails @ 6" OC.

#1 hip supports 9-0-0 jacks W/2 panel TC and no end vert.

Deflection meets L/240 live and L/180 total load.

WARNING: Furnish a copy of this DWG to the installation contractor. Special care must be taken during handling, shipping and installation of trusses. See "WARNING" note below.

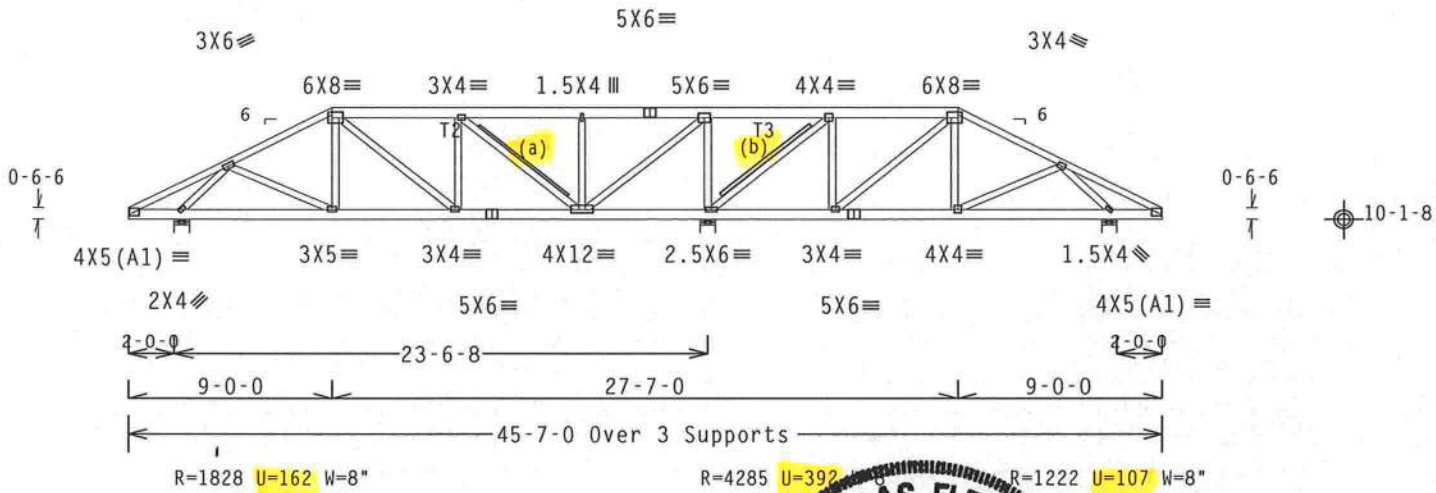

Design Crit: FBC2007Res/TPI-2002(STD)
FT/RT=10%(0%)/0(0)

PLT TYP. Wave

10.03.04.0601.16 QTY 1

FL/-/4/-/-/R/-

Scale =.125"/Ft.

TC LL	20.0 PSF	REF R487-- 29443
TC DL	10.0 PSF	DATE 06/15/12
BC DL	10.0 PSF	DRW HCUSR487 12167002
BC LL	0.0 PSF	HC-ENG DF/DF
TOT.LD.	40.0 PSF	SEQN- 263186
DUR.FAC.	1.25	
SPACING	24.0"	JREF- 1UMZ487_Z01

ALPINE
ITW Building Components Group Inc.
Haines City, FL 33844
FL COA #0 278

WARNING READ AND FOLLOW ALL NOTES ON THIS SHEET!
IMPORTANT FURNISH THIS DESIGN TO ALL CONTRACTORS INCLUDING INSTALLERS.

Trusses require extreme care in fabricating, handling, shipping, installing and bracing. Refer to and follow the latest edition of BCSI (Building Component Safety Information, by TPI and WTCA) for safety practices prior to performing these functions. Installers shall provide temporary bracing per BCSI. Unless noted otherwise, top chord shall have properly attached structural sheathing and bottom chord shall have a properly attached rigid ceiling. Locations shown for permanent lateral restraint of webs shall have bracing installed per BCSI sections B3, B7 or B10, as applicable.

ITW Building Components Group Inc. (ITWBCG) shall not be responsible for any deviation from the design, any failure to build the truss in conformance with ANSI/TPI 1, or for handling, shipping, installing and bracing of trusses. Apply plates to each face of truss and position as shown above and on the Joint Details, unless noted otherwise. Refer to drawings 160A-Z for standard plate positions. A seal on this drawing or cover page listing this drawing, indicates acceptance of professional engineering responsibility solely for the design shown. The suitability and use of this design for any structure is the responsibility of the Building Designer per ANSI/TPI 1 Sec.2. For more information see: This job's general notes page; ITW-BCG: www.itwbcg.com; TPI: www.tpinst.org; WTCA: www.sbcindustry.com; ICC: www.iccsafe.org

DOUGLAS FLEMING LICENSE No. 66648 STATE OF FLORIDA PROFESSIONAL ENGINEER

06/18/2012

THIS DWG PREPARED FROM COMPUTER INPUT (LOADS & DIMENSIONS) SUBMITTED BY TRUSS MFR.

Top chord 2x4 SP #1
Bot chord 2x4 SP #1
Webs 2x4 SP #3

Left and right cantilevers are exposed to wind

(a) 1x4 #3SRB SPF-S or better "T" brace. 80% length of web member. Attach with 8d Box or Gun (0.113"x2.5",min.)nails @ 6" OC.

Bottom chord checked for 10.00 psf non-concurrent live load.

WARNING: Furnish a copy of this DWG to the installation contractor. Special care must be taken during handling, shipping and installation of trusses. See "WARNING" note below.

110 mph wind, 15.00 ft mean hgt, ASCE 7-05, CLOSED bldg, not located within 6.50 ft from roof edge, CAT II, EXP B, wind TC DL=5.0 psf, wind BC DL=5.0 psf. Iw=1.00 GCpi(+/-)=0.18

Wind loads and reactions based on MWFRS with additional C&C member design.

In lieu of structural panels use purlins to brace all flat TC @ 24" OC.

Deflection meets L/240 live and L/180 total load.

MWFRS loads based on trusses located at least 7.50 ft. from roof edge.

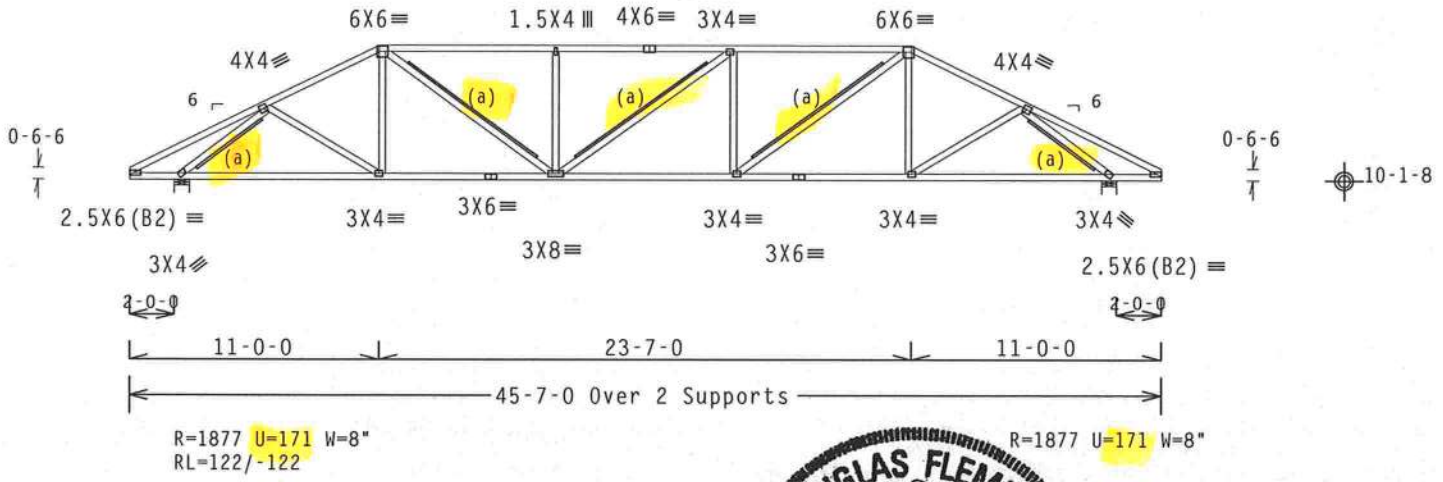

Design Crit: FBC2007Res/TPI-2002(STD)

PLT TYP. Wave FT/RT=10%(0%)/0(0) 10.03.04.0601.16 QTY 1 FL/-/4/-/-/R/- Scale =.125"/Ft.

ALPINE
ITW Building Components Group Inc.
Haines City, FL 33844
FL COA #0 278

WARNING READ AND FOLLOW ALL NOTES ON THIS SHEET!
IMPORTANT FURNISH THIS DESIGN TO ALL CONTRACTORS INCLUDING INSTALLERS.

Trusses require extreme care in fabricating, handling, shipping, installing and bracing. Refer to and follow the latest edition of BCSI (Building Component Safety Information, by TPI and WTCA) for safety practices prior to performing these functions. Installers shall provide temporary bracing per BCSI. Unless noted otherwise, top chord shall have properly attached structural sheathing and bottom chord shall have a properly attached rigid ceiling. Locations shown for permanent lateral restraint of webs shall have bracing installed per BCSI sections B3, B7 or B10, as applicable.

ITW Building Components Group Inc. (ITWBCG) shall not be responsible for any deviation from this design, any failure to build the truss in conformance with ANSI/TPI 1, or for handling, shipping, installing and bracing of trusses. Apply plates to each face of truss and position as shown above and on the Joint Details, unless noted otherwise. Refer to drawings 160A-Z for standard plate positions. A seal on this drawing or cover page listing this drawing, indicates acceptance of professional engineering responsibility solely for the design shown. The suitability and use of this design for any structure is the responsibility of the Building Designer per ANSI/TPI 1 Sec.2. For more information see: This job's general notes page; ITW-BCG: www.itwbcg.com; TPI: www.tpinst.org; WTCA: www.sbcindustry.com; ICC: www.iccsafe.org

DOUGLAS FLEMING LICENSE No. 66648 STATE OF FLORIDA PROFESSIONAL ENGINEER
06/18/2012

TC LL	20.0 PSF	REF	R487-- 29444
TC DL	10.0 PSF	DATE	06/15/12
BC DL	10.0 PSF	DRW	HCUSR487 12167029
BC LL	0.0 PSF	HC-ENG	DF/DF
TOT.LD.	40.0 PSF	SEQN-	263200
DUR.FAC.	1.25		
SPACING	24.0"	JREF-	1UMZ487_Z01

THIS DWG PREPARED FROM COMPUTER INPUT (LOADS & DIMENSIONS) SUBMITTED BY TRUSS MFR.

Top chord 2x4 SP #1
Bot chord 2x4 SP #1
Webs 2x4 SP #3

Left and right cantilevers are exposed to wind

(a) Continuous lateral bracing equally spaced on member.

Deflection meets L/240 live and L/180 total load.

110 mph wind, 15.61 ft mean hgt, ASCE 7-05, CLOSED bldg, not located within 9.00 ft from roof edge, CAT II, EXP B, wind TC DL=5.0 psf, wind BC DL=5.0 psf. Iw=1.00 GCpi(+/-)=0.18

Wind loads and reactions based on MWFRS with additional C&C member design.

Bottom chord checked for 10.00 psf non-concurrent live load.

MWFRS loads based on trusses located at least 15.61 ft. from roof edge.

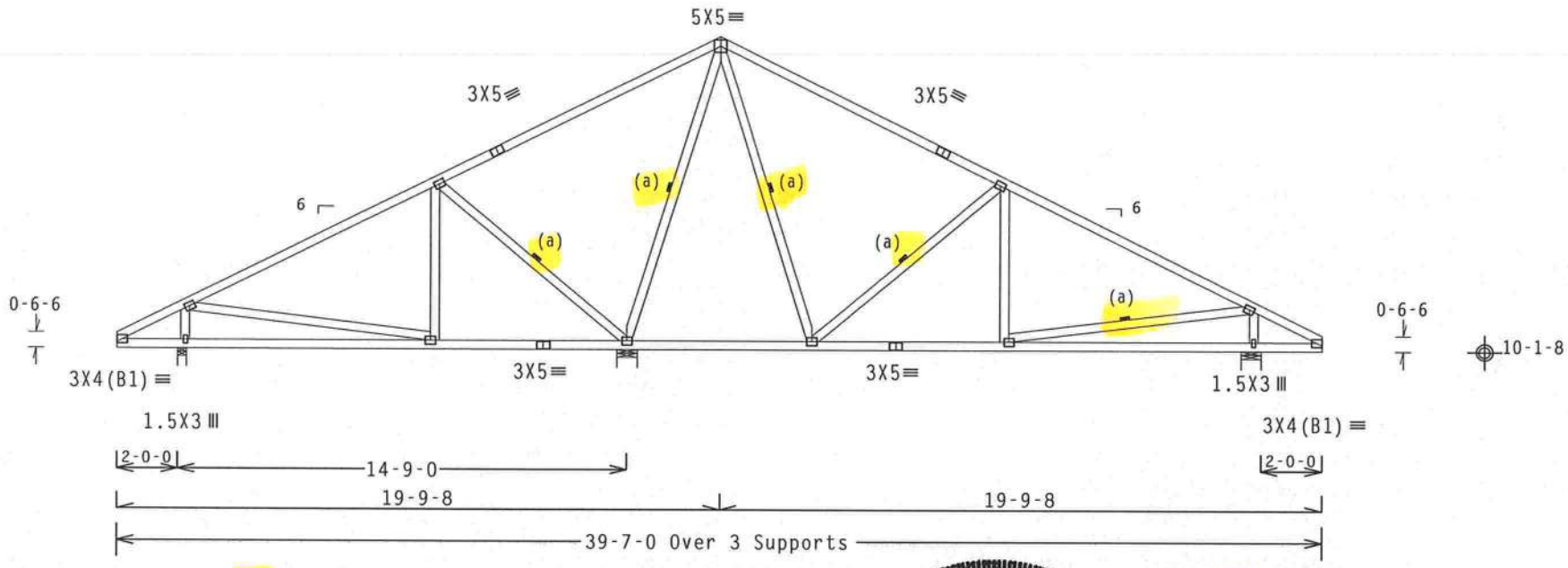

Note: All Plates Are 3X4 Except As Shown.

Design Crit: FBC2007Res/TPI-2002(STD)

PLT TYP. Wave

FT/RT=10%(0%)/0(0)

10.04.0601.16

QTY:

FL/-/4/-/-/R/-

Scale =.1875"/Ft.

ALPINE
ITW Building Components Group Inc.
Haines City, FL 33844
FL COA #0 278

WARNING READ AND FOLLOW ALL NOTES ON THIS SHEET!
IMPORTANT FURNISH THIS DESIGN TO ALL CONTRACTORS INCLUDING INSTALLERS.

Trusses require extreme care in fabricating, handling, shipping, installing and bracing. Refer to and follow the latest edition of BCSI (Building Component Safety Information, by TPI and WTCA) for recommended practices prior to performing these functions. Installers shall provide temporary bracing per BCSI. Unless noted otherwise, top chord shall have properly attached structural sheathing and bottom chord shall have a properly attached rigid ceiling. Locations shown for permanent lateral restraint of webs shall have bracing installed per BCSI sections B3, B7 or B10, as applicable.

ITW Building Components Group Inc. (ITWBCG) shall not be responsible for any deviation from this design, any failure to build the truss in conformance with ANSI/TPI 1, or for handling, shipping, installation and bracing of trusses. Apply plates to each face of truss and position as shown above and on the Joint Details, unless noted otherwise. Refer to drawings 160A-Z for standard plate positions. A seal on this drawing or cover page listing this drawing, indicates acceptance of professional engineering responsibility solely for the design shown. The suitability and use of this design for any structure is the responsibility of the Building Designer per ANSI/TPI 1 Sec.2. For more information see: This job's general notes page; ITW-BCG: www.itwbcg.com; TPI: www.tpinst.org; WTCA: www.sbcindustry.com; ICC: www.iccsafe.org

DOUGLAS FLEMING LICENSE No.66648 STATE OF FLORIDA PROFESSIONAL ENGINEER

06/18/2012

TC LL	20.0 PSF	REF R487-- 29445
TC DL	10.0 PSF	DATE 06/15/12
BC DL	10.0 PSF	DRW HCUSR487 12167015
BC LL	0.0 PSF	HC-ENG DF/DF
TOT.LD.	40.0 PSF	SEQN- 262301
DUR.FAC.	1.25	
SPACING	24.0"	JREF- 1UMZ487_Z01

THIS DWG PREPARED FROM COMPUTER INPUT (LOADS & DIMENSIONS) SUBMITTED BY TRUSS MFR.

Top chord 2x4 SP #1
Bot chord 2x4 SP #1
Webs 2x4 SP #3

Left and right cantilevers are exposed to wind

(a) 1x4 #3SRB SPF-S or better "T" brace. 80% length of web member. Attach with 8d Box or Gun (0.113"x2.5",min.)nails @ 6" OC.

Bottom chord checked for 10.00 psf non-concurrent live load.

MWFRS loads based on trusses located at least 7.50 ft. from roof edge.

110 mph wind, 15.00 ft mean hgt, ASCE 7-05, CLOSED bldg, not located within 9.00 ft from roof edge, CAT II, EXP B, wind TC DL=5.0 psf, wind BC DL=5.0 psf. Iw=1.00 GCpi(+/-)=0.18

Wind loads and reactions based on MWFRS with additional C&C member design.

In lieu of structural panels use purlins to brace all flat TC @ 24" OC.

Deflection meets L/240 live and L/180 total load.

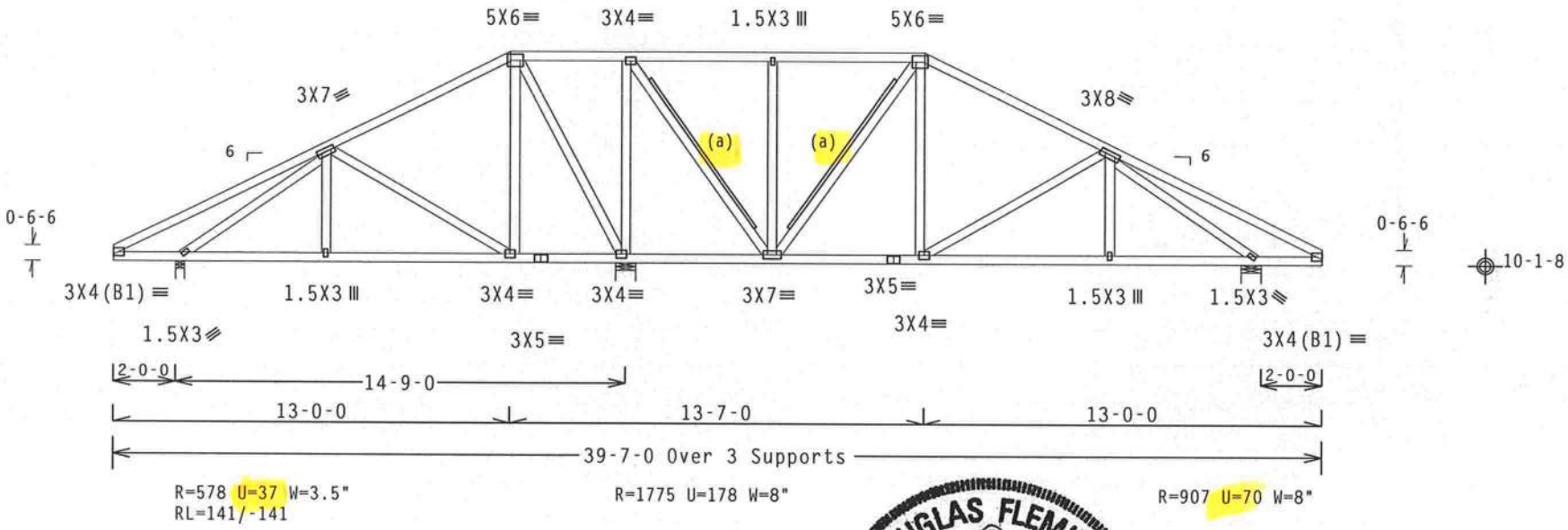

Design Crit: FBC2007Res/TPI-2002(STD)
FT/RT=10%(0%)/0(0)

PLT TYP. Wave

10.03.04.0601.16 QTY:

FL/-/4/-/-/R/-

Scale =.1875"/Ft.

ALPINE
ITW Building Components Group Inc.
Haines City, FL 33844
FL COA #0 278

WARNING READ AND FOLLOW ALL NOTES ON THIS SHEET!
IMPORTANT FURNISH THIS DESIGN TO ALL CONTRACTORS INCLUDING INSTALLERS.

Trusses require extreme care in fabricating, handling, shipping, installing and bracing. Refer to and follow the latest edition of BCSI (Building Component Safety Information, by TPI and WTCA) for standard practices prior to performing these functions. Installers shall provide temporary bracing per BCSI. Unless noted otherwise, top chord shall have properly attached structural sheathing and bottom chord shall have a properly attached rigid ceiling. Locations shown for permanent lateral restraint of webs shall have bracing installed per BCSI sections B3, B7 or B10, as applicable.

ITW Building Components Group Inc. (ITWBCG) shall not be responsible for any deviation from this design, any failure to build the truss in conformance with ANSI/TPI 1, or for handling, shipping, installation or bracing of trusses. Apply plates to each face of truss and position as shown above and on the Joint Details, unless noted otherwise. Refer to drawings 160A-Z for standard plate positions. A seal on this drawing or cover page listing this drawing, indicates acceptance of professional engineering responsibility solely for the design shown. The suitability and use of this design for any structure is the responsibility of the Building Designer per ANSI/TPI 1 Sec.2. For more information see: This job's general notes page; ITW-BCG: www.itwbcg.com; TPI: www.tpinst.org; WTCA: www.sbcindustry.com; ICC: www.iccsafe.org

DOUGLAS FLEMING LICENSE No. 66648 STATE OF FLORIDA PROFESSIONAL ENGINEER

06/18/2012

TC LL	20.0 PSF	REF R487-- 29446
TC DL	10.0 PSF	DATE 06/15/12
BC DL	10.0 PSF	DRW HCUSR487 12167008
BC LL	0.0 PSF	HC-ENG DF/DF
TOT.LD.	40.0 PSF	SEQN- 262235
DUR.FAC.	1.25	
SPACING	24.0"	JREF- 1UMZ487_Z01

THIS DWG PREPARED FROM COMPUTER INPUT (LOADS & DIMENSIONS) SUBMITTED BY TRUSS MFR.

Top chord 2x4 SP #1
Bot chord 2x4 SP #1
Webs 2x4 SP #3

Left and right cantilevers are exposed to wind

(a) 1x4 #3SRB SPF-S or better "T" brace. 80% length of web member. Attach with 8d Box or Gun (0.113"x2.5",min.)nails @ 6" OC.

Bottom chord checked for 10.00 psf non-concurrent live load.

MWFRS loads based on trusses located at least 15.00 ft. from roof edge.

110 mph wind, 15.00 ft mean hgt, ASCE 7-05, CLOSED bldg, not located within 9.00 ft from roof edge, CAT II, EXP B, wind TC DL=5.0 psf, wind BC DL=5.0 psf. Iw=1.00 GCpi(+/-)=0.18

Wind loads and reactions based on MWFRS with additional C&C member design.

In lieu of structural panels use purlins to brace all flat TC @ 24" OC.

Deflection meets L/240 live and L/180 total load.

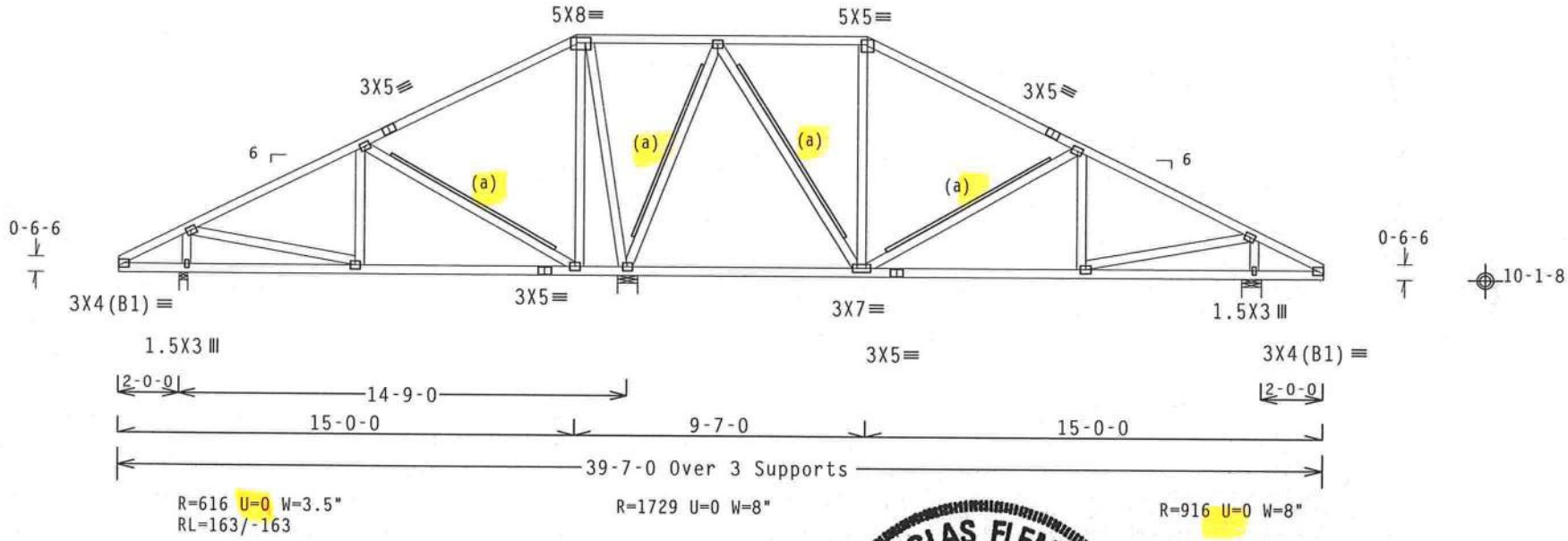

Note: All Plates Are 3X4 Except As Shown.

Design Crit: FBC2007Res/TPI-2002(STD)

PLT TYP. Wave

FT/RT=10%(0%)/0(0)

10.03.04.0601.16 QTY 1

FL/-/4/-/-/R/-

Scale =.1875"/Ft.

ALPINE
ITW Building Components Group Inc.
Haines City, FL 33844
FL COA #0 278

WARNING READ AND FOLLOW ALL NOTES ON THIS SHEET!
IMPORTANT FURNISH THIS DESIGN TO ALL CONTRACTORS INCLUDING INSTALLERS.

Trusses require extreme care in fabricating, handling, shipping, installing and bracing. Refer to and follow the latest edition of BCSI (Building Component Safety Information, by TPI and WTCA) for safety practices prior to performing these functions. Installers shall provide temporary bracing per BCSI. Unless noted otherwise, top chord shall have properly attached structural sheathing and bottom chord shall have a properly attached rigid ceiling. Locations shown for permanent lateral restraint of webs shall have bracing installed per BCSI sections B3, B7 or B10, as applicable.

ITW Building Components Group Inc. (ITWBCG) shall not be responsible for any deviation from this design, any failure to build the truss in conformance with ANSI/TPI 1, or for handling, shipping, installing and bracing of trusses. Apply plates to each face of truss and position as shown above and on the Joint Details, unless noted otherwise. Refer to drawings 160A-Z for standard plate positions. A seal on this drawing or cover page listing this drawing, indicates acceptance of professional engineering responsibility solely for the design shown. The suitability and use of this design for any structure is the responsibility of the Building Designer per ANSI/TPI 1 Sec.2. For more information see: This job's general notes page; ITW-BCG: www.itwbcg.com; TPI: www.tpinst.org; WTCA: www.sbcindustry.com; ICC: www.iccsafe.org

DOUGLAS FLEMING LICENSE No. 66648 STATE OF FLORIDA PROFESSIONAL ENGINEER

06/18/2012

TC LL	20.0 PSF	REF	R487-- 29447
TC DL	10.0 PSF	DATE	06/15/12
BC DL	10.0 PSF	DRW	HCUSR487 12167010
BC LL	0.0 PSF	HC-ENG	DF/DF
TOT.LD.	40.0 PSF	SEQN-	262250
DUR.FAC.	1.25		
SPACING	24.0"	JREF-	1UMZ487_Z01

(12-010rev--BRYAN ZECHER Neely Residence -- 2682 NW Noegel Rd. Lake City, FL 3 - H15D)

THIS DWG PREPARED FROM COMPUTER INPUT (LOADS & DIMENSIONS) SUBMITTED BY TRUSS MFR.

Top chord 2x4 SP #1
Bot chord 2x4 SP #1
Webs 2x4 SP #3

Left and right cantilevers are exposed to wind

(a) 1x4 #3SRB SPF-S or better "T" brace. 80% length of web member. Attach with 8d Box or Gun (0.113"x2.5",min.)nails @ 6" OC.

In lieu of structural panels use purlins to brace all flat TC @ 24" OC.

Deflection meets L/240 live and L/180 total load.

110 mph wind, 15.00 ft mean hgt, ASCE 7-05, CLOSED bldg, not located within 9.00 ft from roof edge, CAT II, EXP B, wind TC DL=5.0 psf, wind BC DL=5.0 psf. Iw=1.00 GCpi(+/-)=0.18

Wind loads and reactions based on MWFRS with additional C&C member design.

(b) 2x4 #3 or better "T" brace. 80% length of web member. Attach with 16d Box or Gun (0.135"x3.5",min.)nails @ 6" OC.

Bottom chord checked for 10.00 psf non-concurrent live load.

MWFRS loads based on trusses located at least 15.00 ft. from roof edge.

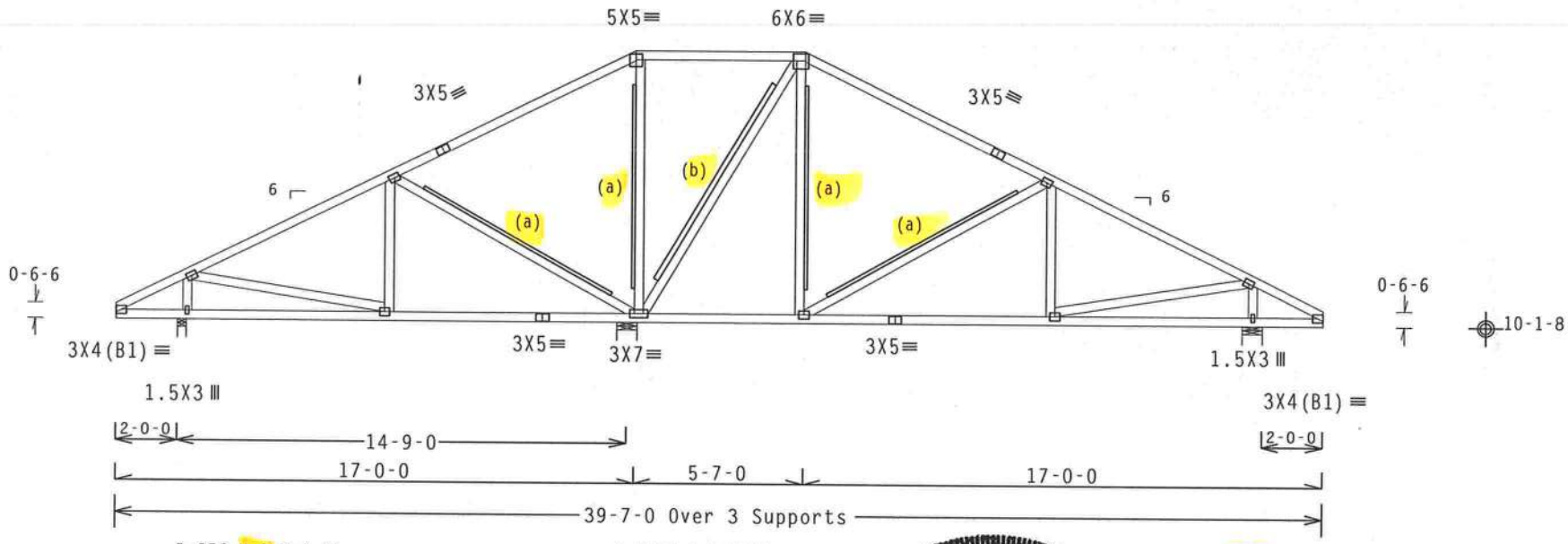

Note: All Plates Are 3X4 Except As Shown.

Design Crit: FBC2007Res/TPI-2002(STD)

PLT TYP. Wave FT/RT=10%(0%)/0(0) 10.00.04.0601.16 QTY: FL/-/4/-/-/R/- Scale =.1875"/Ft.

ALPINE
ITW Building Components Group Inc.
Haines City, FL 33844
FL COA #0 278

WARNING READ AND FOLLOW ALL NOTES ON THIS SHEET!
IMPORTANT FURNISH THIS DESIGN TO ALL CONTRACTORS INCLUDING INSTALLERS.

Trusses require extreme care in fabricating, handling, shipping, installing and bracing. Refer to and follow the latest edition of BCSI (Building Component Safety Information, by TPI and WTCA) for [illegible] practices prior to performing these functions. Installers shall provide temporary bracing per BCSI. Unless noted otherwise, top chord shall have properly attached structural sheathing and bottom chord shall have a properly attached rigid ceiling. Locations shown for permanent lateral restraint of webs shall have bracing installed per BCSI sections B3, B7 or B10, as applicable.

ITW Building Components Group Inc. (ITWBCG) shall not be responsible for any deviation from this [illegible] any failure to build the truss in conformance with ANSI/TPI 1, or for handling, shipping, installation bracing of trusses. Apply plates to each face of truss and position as shown above and on the Joint Details, unless noted otherwise. Refer to drawings 160A-Z for standard plate positions. A seal on this drawing or cover page listing this drawing, indicates acceptance of professional engineering responsibility solely for the design shown. The suitability and use of this design for any structure is the responsibility of the Building Designer per ANSI/TPI 1 Sec.2. For more information see: This job's general notes page; ITW-BCG: www.itwbcg.com; TPI: www.tpinst.org; WTCA: www.sbcindustry.com; ICC: www.iccsafe.org

DOUGLAS FLEMING LICENSE No. 66648 STATE OF FLORIDA PROFESSIONAL ENGINEER

06/18/2012

TC LL	20.0 PSF	REF	R487-- 29448
TC DL	10.0 PSF	DATE	06/15/12
BC DL	10.0 PSF	DRW	HCUSR487 12167013
BC LL	0.0 PSF	HC-ENG	DF/DF
TOT.LD.	40.0 PSF	SEQN-	262263
DUR.FAC.	1.25		
SPACING	24.0"	JREF-	1UMZ487_Z01

THIS DWG PREPARED FROM COMPUTER INPUT (LOADS & DIMENSIONS) SUBMITTED BY TRUSS MFR.

Top chord 2x4 SP #1
Bot chord 2x4 SP #1
Webs 2x4 SP #3

Left and right cantilevers are exposed to wind

(a) 1x4 #3SRB SPF-S or better "T" brace. 80% length of web member. Attach with 8d Box or Gun (0.113"x2.5",min.)nails @ 6" OC.

(b) 2x6 #3 or better "T" brace. 80% length of web member. Attach with 16d Box or Gun (0.135"x3.5",min.)nails @ 6" OC.

Bottom chord checked for 10.00 psf non-concurrent live load.

MWFRS loads based on trusses located at least 15.41 ft. from roof edge.

110 mph wind, 15.41 ft mean hgt, ASCE 7-05, CLOSED bldg, not located within 9.00 ft from roof edge, CAT II, EXP B, wind TC DL=5.0 psf, wind BC DL=5.0 psf. Iw=1.00 GCpi(+/-)=0.18

Wind loads and reactions based on MWFRS with additional C&C member design.

(c) 2x4 #3 or better "T" brace. 80% length of web member. Attach with 16d Box or Gun (0.135"x3.5",min.)nails @ 6" OC.

In lieu of structural panels use purlins to brace all flat TC @ 24" OC.

Deflection meets L/240 live and L/180 total load.

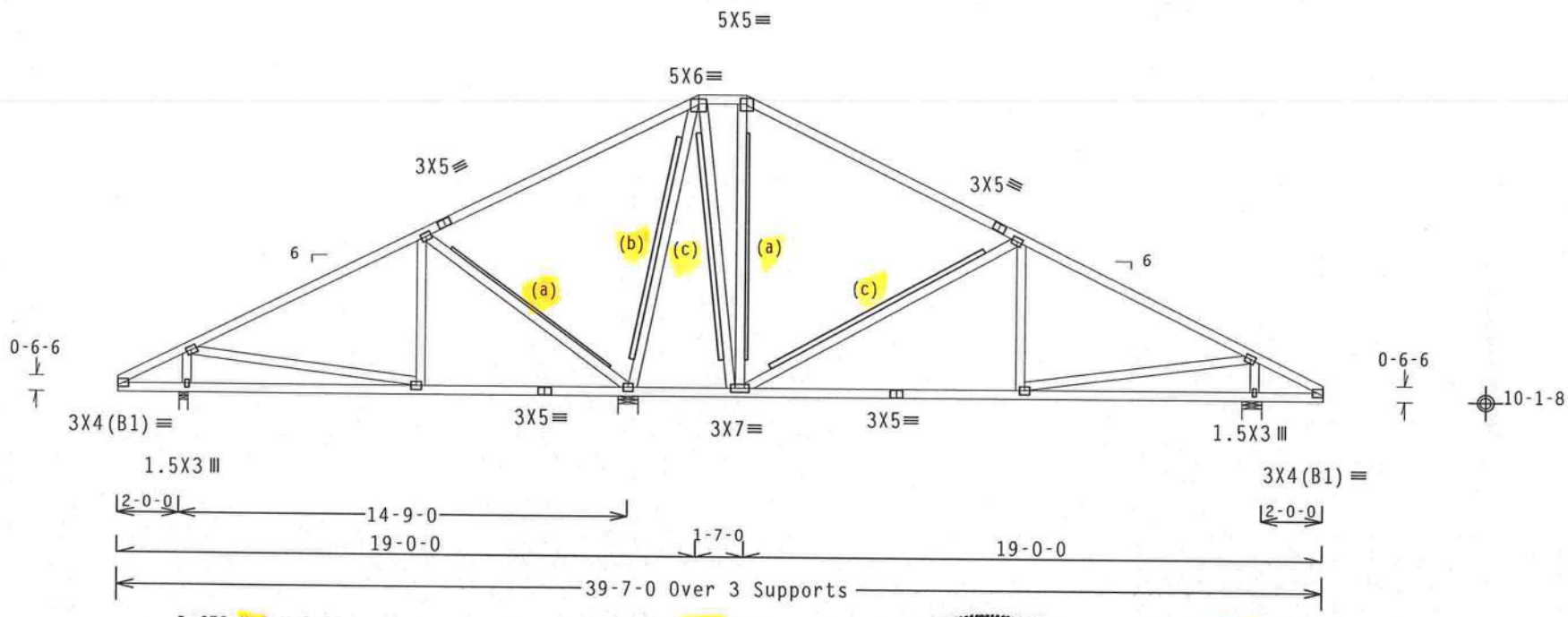

Note: All Plates Are 3X4 Except As Shown.

Design Crit: FBC2007Res/TPI-2002(STD)

PLT TYP. Wave

FT/RT=10%(0%)/0(0)

10.03.04.0601.16 QTY 1

FL/-/4/-/-/R/-

Scale =.1875"/Ft.

TC LL	20.0 PSF	REF R487-- 29449
TC DL	10.0 PSF	DATE 06/15/12
BC DL	10.0 PSF	DRW HCUSR487 12167014
BC LL	0.0 PSF	HC-ENG DF/DF
TOT.LD.	40.0 PSF	SEQN- 262277
DUR.FAC.	1.25	
SPACING	24.0"	JREF- 1UMZ487_Z01

ALPINE
ITW Building Components Group Inc.
Haines City, FL 33844
FL COA #0 278

WARNING READ AND FOLLOW ALL NOTES ON THIS SHEET!
IMPORTANT FURNISH THIS DESIGN TO ALL CONTRACTORS INCLUDING INSTALLERS.

Trusses require extreme care in fabricating, handling, shipping, installing and bracing. Refer to and follow the latest edition of BCSI (Building Component Safety Information, by TPI and WTCA) for safety practices prior to performing these functions. Installers shall provide temporary bracing per BCSI. Unless noted otherwise, top chord shall have properly attached structural sheathing and bottom chord shall have a properly attached rigid ceiling. Locations shown for permanent lateral restraint of webs shall have bracing installed per BCSI sections B3, B7 or B10, as applicable.

ITW Building Components Group Inc. (ITWBCG) shall not be responsible for any deviation from this design, any failure to build the truss in conformance with ANSI/TPI 1, or for handling, shipping, installing and bracing of trusses. Apply plates to each face of truss and position as shown above and on the Joint Details, unless noted otherwise. Refer to drawings 160A-Z for standard plate positions. A seal on this drawing or cover page listing this drawing, indicates acceptance of professional engineering responsibility solely for the design shown. The suitability and use of this design for any structure is the responsibility of the Building Designer per ANSI/TPI 1 Sec.2. For more information see: This job's general notes page; ITW-BCG: www.itwbcg.com; TPI: www.tpinst.org; WTCA: www.sbcindustry.com; ICC: www.iccsafe.org

DOUGLAS FLEMING LICENSE No. 66648 STATE OF FLORIDA PROFESSIONAL ENGINEER

06/18/2012

THIS DWG PREPARED FROM COMPUTER INPUT (LOADS & DIMENSIONS) SUBMITTED BY TRUSS MFR.

Top chord 2x4 SP #1 :T2, T3 2x6 SP #2:
Bot chord 2x4 SP #1
Webs 2x4 SP #3

Left and right cantilevers are exposed to wind

(b) 1x4 #3SRB SPF-S or better "T" brace. 80% length of web member. Attach with 8d Box or Gun (0.113"x2.5",min.)nails @ 6" OC.

In lieu of structural panels use purlins to brace all flat TC @ 24" OC.

Left side jacks have 9-0-0 setback with 2-0-0 cant and 0-0-0 overhang. End jacks have 9-0-0 setback with 2-0-0 cant and 0-0-0 overhang. Right side jacks have 9-0-0 setback with 2-0-0 cant and 0-0-0 overhang.

110 mph wind, 15.00 ft mean hgt, ASCE 7-05, CLOSED bldg, Located anywhere in roof, CAT II, EXP B, wind TC DL=5.0 psf, wind BC DL=5.0 psf. Iw=1.00 GCpi(+/-)=0.18

Wind loads and reactions based on MWFRS with additional C&C member design.

(a) 2x6 #3 or better "T" brace. 80% length of web member. Attach with 16d Box or Gun (0.135"x3.5",min.)nails @ 6" OC.

#1 hip supports 9-0-0 jacks W/2 panel TC and no end vert.

Deflection meets L/240 live and L/180 total load.

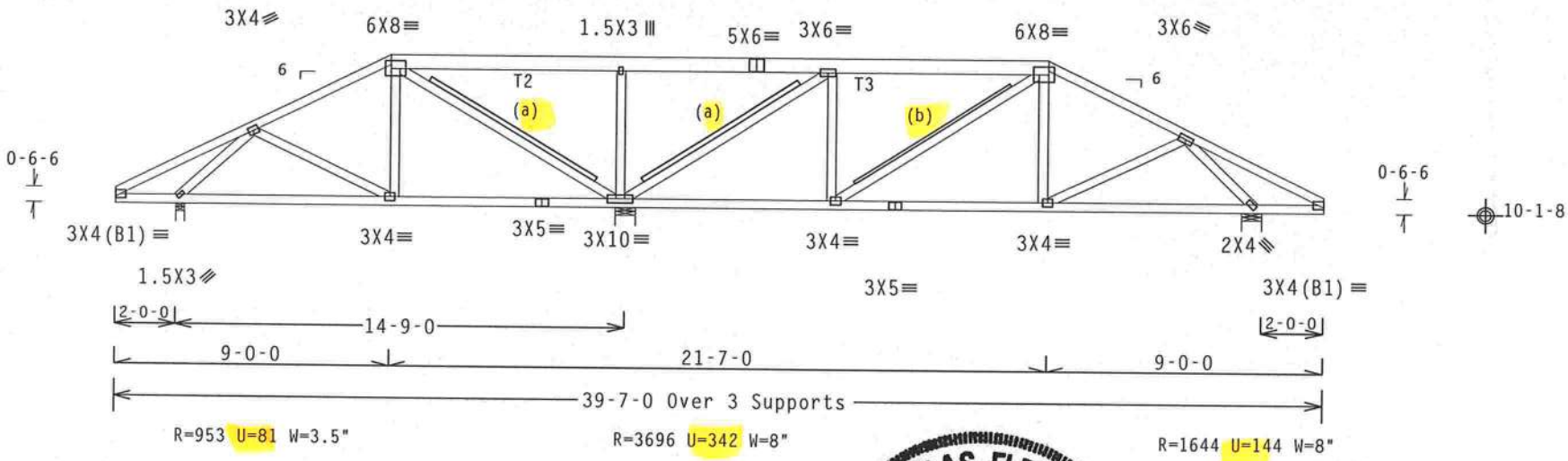

Design Crit: FBC2007Res/TPI-2002(STD)
FT/RT=10%(0%)/0(0)

PLT TYP. Wave

10.03.04.0601.15 QTY 1

FL/-/4/-/-/R/-

Scale =.1875"/Ft.

TC LL	20.0 PSF	REF	R487-- 29450
TC DL	10.0 PSF	DATE	06/15/12
BC DL	10.0 PSF	DRW	HCUSR487 12167022
BC LL	0.0 PSF	HC-ENG	DF/DF
TOT.LD.	40.0 PSF	SEQN-	262206
DUR.FAC.	1.25		
SPACING	24.0"	JREF-	1UMZ487_Z01

ALPINE
ITW Building Components Group Inc.
Haines City, FL 33844
FL COA #0 278

WARNING READ AND FOLLOW ALL NOTES ON THIS SHEET!
IMPORTANT FURNISH THIS DESIGN TO ALL CONTRACTORS INCLUDING INSTALLERS.

Trusses require extreme care in fabricating, handling, shipping, installing and bracing. Refer to and follow the latest edition of BCSI (Building Component Safety Information, by TPI and WTCA) for safety practices prior to performing these functions. Installers shall provide temporary bracing per BCSI. Unless noted otherwise, top chord shall have properly attached structural sheathing and bottom chord shall have a properly attached rigid ceiling. Locations shown for permanent lateral restraint of webs shall have bracing installed per BCSI sections B3, B7 or B10, as applicable.

ITW Building Components Group Inc. (ITWBCG) shall not be responsible for any deviation from this design, any failure to build the truss in conformance with ANSI/TPI 1, or for handling, shipping, installing and bracing of trusses. Apply plates to each face of truss and position as shown above and on the Joint Details, unless noted otherwise. Refer to drawings 160A-Z for standard plate positions. A seal on this drawing or cover page listing this drawing, indicates acceptance of professional engineering responsibility solely for the design shown. The suitability and use of this design for any structure is the responsibility of the Building Designer per ANSI/TPI 1 Sec.2. For more information see: This job's general notes page; ITW-BCG: www.itwbcg.com; TPI: www.tpinst.org; WTCA: www.sbcindustry.com; ICC: www.iccsafe.org

DOUGLAS FLEMING LICENSE No. 66648 STATE OF FLORIDA PROFESSIONAL ENGINEER

06/18/2012

Top chord 2x4 SP #1
Bot chord 2x4 SP #1
Webs 2x4 SP #3

Left and right cantilevers are exposed to wind

(a) 1x4 #3SRB SPF-S or better "T" brace. 80% length of web member. Attach with 8d Box or Gun (0.113"x2.5",min.)nails @ 6" OC.

Bottom chord checked for 10.00 psf non-concurrent live load.

MWFRS loads based on trusses located at least 7.50 ft. from roof edge.

110 mph wind, 15.00 ft mean hgt, ASCE 7-05, CLOSED bldg, not located within 9.00 ft from roof edge, CAT II, EXP B, wind TC DL=5.0 psf, wind BC DL=5.0 psf. Iw=1.00 GCpi(+/-)=0.18

Wind loads and reactions based on MWFRS with additional C&C member design.

In lieu of structural panels use purlins to brace all flat TC @ 24" OC.

Deflection meets L/240 live and L/180 total load.

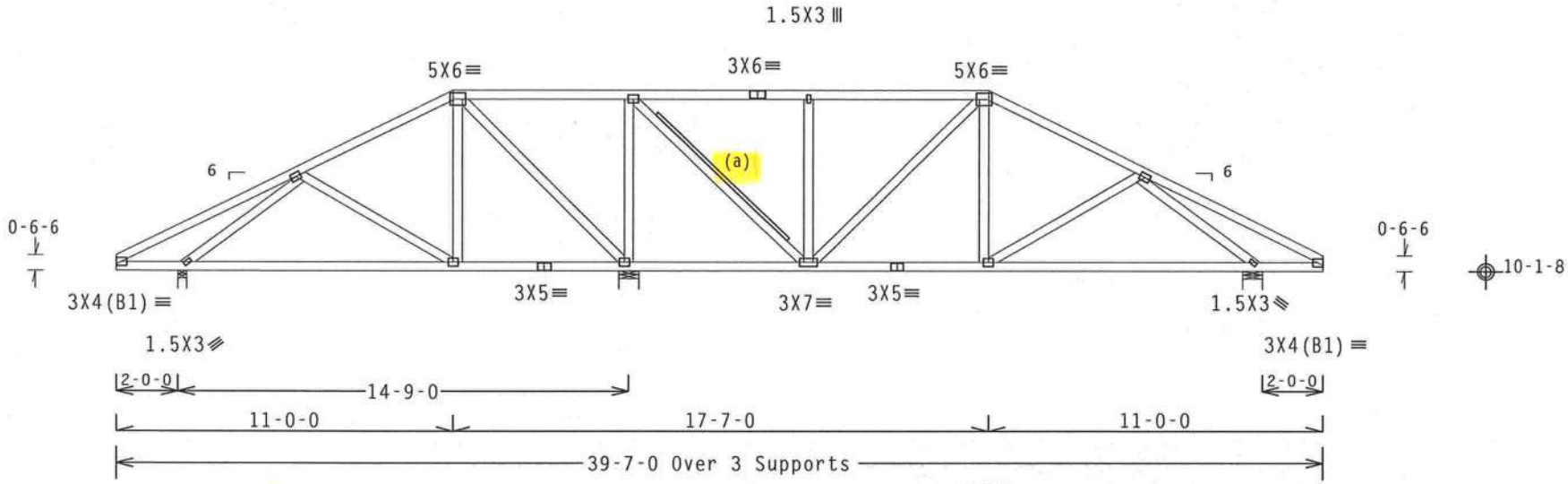

Note: All Plates Are 3X4 Except As Shown.

Design Crit: FBC2007Res/TPI-2002(STD)

PLT TYP. Wave FT/RT=10%(0%)/0(0) 10.03.04.0601.16 QTY 1 FL/-/4/-/-/R/- Scale =.1875"/Ft.

ALPINE
ITW Building Components Group Inc.
Haines City, FL 33844
FL COA #0 278

WARNING READ AND FOLLOW ALL NOTES ON THIS SHEET!
IMPORTANT FURNISH THIS DESIGN TO ALL CONTRACTORS INCLUDING INSTALLERS.

Trusses require extreme care in fabricating, handling, shipping, installing and bracing. Refer to and follow the latest edition of BCSI (Building Component Safety Information, by TPI and WTCA) for safety practices prior to performing these functions. Installers shall provide temporary bracing per BCSI. Unless noted otherwise, top chord shall have properly attached structural sheathing and bottom chord shall have a properly attached rigid ceiling. Locations shown for permanent lateral restraint of webs shall have bracing installed per BCSI sections B3, B7 or B10, as applicable.

ITW Building Components Group Inc. (ITWBCG) shall not be responsible for any deviation from this design, any failure to build the truss in conformance with ANSI/TPI 1, or for handling, shipping, installing and bracing of trusses. Apply plates to each face of truss and position as shown above and on the Joint Details, unless noted otherwise. Refer to drawings 160A-Z for standard plate positions. A seal on this drawing or cover page listing this drawing, indicates acceptance of professional engineering responsibility solely for the design shown. The suitability and use of this design for any structure is the responsibility of the Building Designer per ANSI/TPI 1 Sec.2. For more information see: This job's general notes page; ITW-BCG: www.itwbcg.com; TPI: www.tpinst.org; WTCA: www.sbcindustry.com; ICC: www.iccsafe.org

DOUGLAS FLEMING LICENSE No. 66648 STATE OF FLORIDA PROFESSIONAL ENGINEER

06/18/2012

TC LL	20.0 PSF	REF R487-- 29451
TC DL	10.0 PSF	DATE 06/15/12
BC DL	10.0 PSF	DRW HCUSR487 12167039
BC LL	0.0 PSF	HC-ENG DF/DF
TOT.LD.	40.0 PSF	SEQN- 262222
DUR.FAC.	1.25	
SPACING	24.0"	JREF- 1UMZ487_Z01

THIS DWG PREPARED FROM COMPUTER INPUT (LOADS & DIMENSIONS) SUBMITTED BY TRUSS MFR.

Top chord 2x4 SP #1
Bot chord 2x4 SP #1
Webs 2x4 SP #3

Left and right cantilevers are exposed to wind

(a) Continuous lateral bracing equally spaced on member.

Bottom chord checked for 10.00 psf non-concurrent live load.

Deflection meets L/240 live and L/180 total load.

110 mph wind, 15.00 ft mean hgt, ASCE 7-05, CLOSED bldg, not located within 9.00 ft from roof edge, CAT II, EXP B, wind TC DL=5.0 psf, wind BC DL=5.0 psf. Iw=1.00 GCpi(+/-)=0.18

Wind loads and reactions based on MWFRS with additional C&C member design.

Truss passed check for 20 psf additional bottom chord live load in areas with 42"-high x 24"-wide clearance.

MWFRS loads based on trusses located at least 30.00 ft. from roof edge.

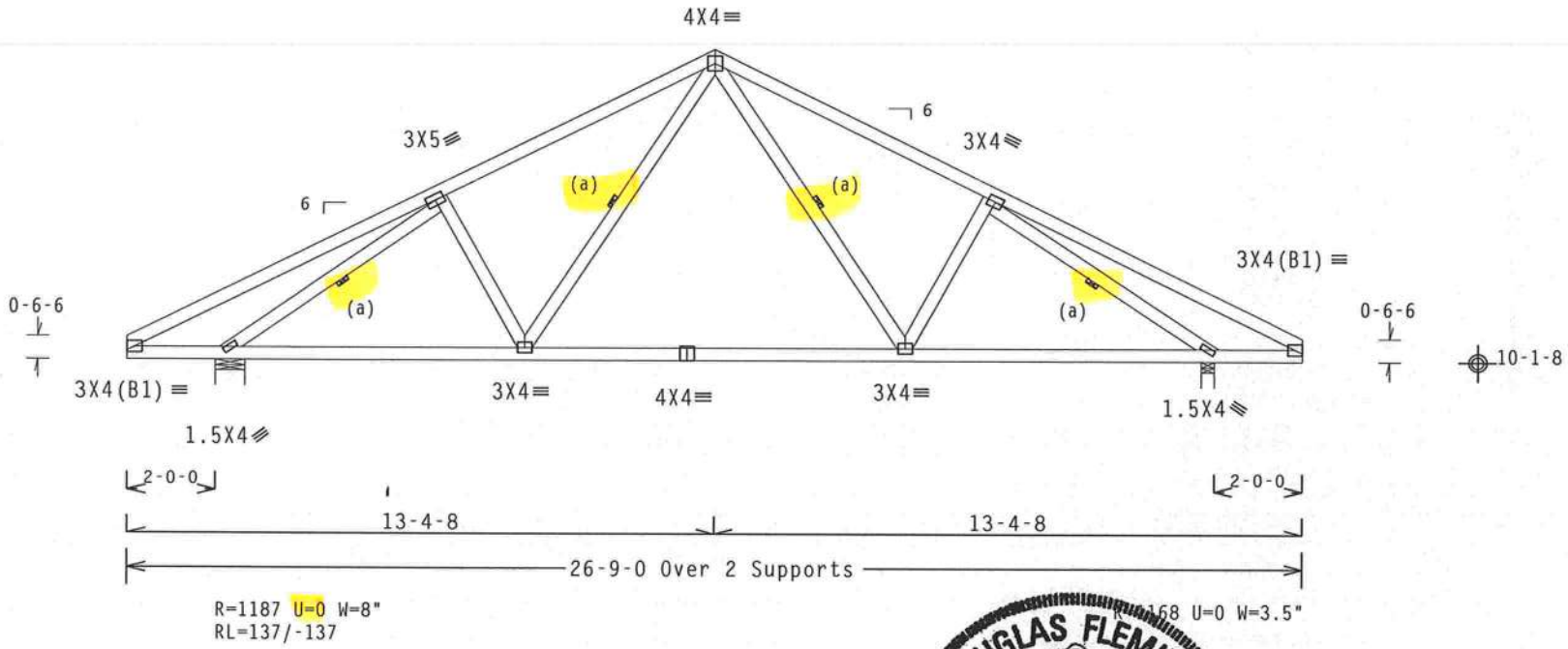

Design Crit: FBC2007Res/TPI-2002(STD)
FT/RT=10%(0%)/0(0)

PLT TYP. Wave

10.03.04.0601.16 QTY: 10 FL/-/4/-/-/R/- Scale =.25"/Ft.

ALPINE
ITW Building Components Group Inc.
Haines City, FL 33844
FL COA #0 278

WARNING READ AND FOLLOW ALL NOTES ON THIS SHEET!
IMPORTANT FURNISH THIS DESIGN TO ALL CONTRACTORS INCLUDING INSTALLERS.

Trusses require extreme care in fabricating, handling, shipping, installing and bracing. Refer to and follow the latest edition of BCSI (Building Component Safety Information, by TPI and WTCA) for general practices prior to performing these functions. Installers shall provide temporary bracing per BCSI. Unless noted otherwise, top chord shall have properly attached structural sheathing and bottom chord shall have a properly attached rigid ceiling. Locations shown for permanent lateral restraint of webs shall have bracing installed per BCSI sections B3, B7 or B10, as applicable.

ITW Building Components Group Inc. (ITWBCG) shall not be responsible for any deviation from this design, any failure to build the truss in conformance with ANSI/TPI 1, or for handling, shipping, installation and bracing of trusses. Apply plates to each face of truss and position as shown above and on the Joint Details, unless noted otherwise. Refer to drawings 160A-Z for standard plate positions. A seal on this drawing or cover page listing this drawing, indicates acceptance of professional engineering responsibility solely for the design shown. The suitability and use of this design for any structure is the responsibility of the Building Designer per ANSI/TPI 1 Sec.2. For more information see: This job's general notes page; ITW-BCG: www.itwbcg.com; TPI: www.tpinst.org; WTCA: www.sbcindustry.com; ICC: www.iccsafe.org

DOUGLAS FLEMING LICENSE No. 66648 STATE OF FLORIDA PROFESSIONAL ENGINEER
06/18/2012

TC LL	20.0 PSF	REF R487-- 29452
TC DL	10.0 PSF	DATE 06/15/12
BC DL	10.0 PSF	DRW HCUSR487 12167033
BC LL	0.0 PSF	HC-ENG DF/DF
TOT.LD.	40.0 PSF	SEQN- 262825
DUR.FAC.	1.25	
SPACING	24.0"	JREF- 1UMZ487_Z01

THIS DWG PREPARED FROM COMPUTER INPUT (LOADS & DIMENSIONS) SUBMITTED BY TRUSS MFR.

Top chord 2x4 SP #1
Bot chord 2x4 SP #1
Webs 2x4 SP #3

Left cantilever is exposed to wind

H = recommended connection based on manufacturer tested capacities and calculations. Conditions may exist that require different connections than indicated. Refer to manufacturer publication for additional information.

Bottom chord checked for 10.00 psf non-concurrent live load.

Deflection meets L/240 live and L/180 total load.

110 mph wind, 15.00 ft mean hgt, ASCE 7-05, CLOSED bldg, not located within 9.00 ft from roof edge, CAT II, EXP B, wind TC DL=5.0 psf, wind BC DL=5.0 psf. Iw=1.00 GCpi(+/-)=0.18

Wind loads and reactions based on MWFRS with additional C&C member design.

(a) Continuous lateral bracing equally spaced on member.

Truss passed check for 20 psf additional bottom chord live load in areas with 42"-high x 24"-wide clearance.

MWFRS loads based on trusses located at least 30.00 ft. from roof edge.

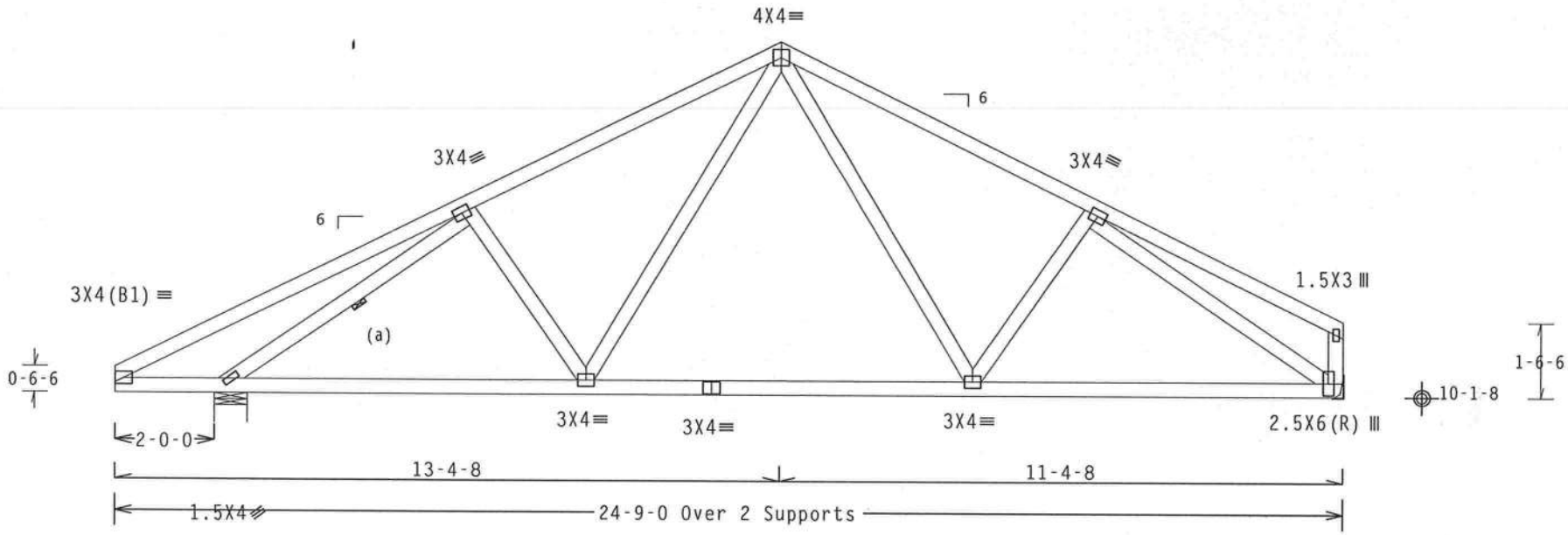

R=1192 U=0 W=8"
RL=132/-122

R=978 U=0 H=Simpson LUS26
Supported Member Face: (4) 0.148"x3"
Supporting Member Face: (4) 0.148"x3"
Supporting Member : (1) 2x6 SP #2

Design Crit: FBC2007Res/TPI-2002(STD)

PLT TYP. Wave

FT/RT=10%(0%)/0(0) 10.03.04.0601.16 QTY 3 FL/-/4/-/-/R/- Scale =.3125"/Ft.

ALPINE
ITW Building Components Group Inc.
Haines City, FL 33844
FL COA #0 278

WARNING READ AND FOLLOW ALL NOTES ON THIS SHEET!
IMPORTANT FURNISH THIS DESIGN TO ALL CONTRACTORS INCLUDING INSTALLERS.

Trusses require extreme care in fabricating, handling, shipping, installing and bracing. Refer to and follow the latest edition of BCSI (Building Component Safety Information, by TPI and WTCA) for safety practices prior to performing these functions. Installers shall provide temporary bracing per BCSI. Unless noted otherwise, top chord shall have properly attached structural sheathing and bottom chord shall have a properly attached rigid ceiling. Locations shown for permanent lateral restraint of webs shall have bracing installed per BCSI sections B3, B7 or B10, as applicable.

ITW Building Components Group Inc. (ITWBCG) shall not be responsible for any deviation from this design, any failure to build the truss in conformance with ANSI/TPI 1, or for handling, shipping, installing and bracing of trusses. Apply plates to each face of truss and position as shown above and on the Joint Details, unless noted otherwise. Refer to drawings 160A-Z for standard plate positions. A seal on this drawing or cover page listing this drawing, indicates acceptance of professional engineering responsibility solely for the design shown. The suitability and use of this design for any structure is the responsibility of the Building Designer per ANSI/TPI 1 Sec.2. For more information see: This job's general notes page; ITW-BCG: www.itwbcg.com; TPI: www.tpinst.org; WTCA: www.sbcindustry.com; ICC: www.iccsafe.org

DOUGLAS FLEMING LICENSE No. 66648 STATE OF FLORIDA PROFESSIONAL ENGINEER

06/18/2012

TC LL	20.0 PSF	REF	R487-- 29453
TC DL	10.0 PSF	DATE	06/15/12
BC DL	10.0 PSF	DRW	HCUSR487 12167001
BC LL	0.0 PSF	HC-ENG	DF/DF
TOT.LD.	40.0 PSF	SEQN-	262904
DUR.FAC.	1.25		
SPACING	24.0"	JREF-	1UMZ487_Z01

THIS DWG PREPARED FROM COMPUTER INPUT (LOADS & DIMENSIONS) SUBMITTED BY TRUSS MFR.

Top chord 2x4 SP #1
Bot chord 2x4 SP #1
Webs 2x4 SP #3

Right cantilever is exposed to wind

H = recommended connection based on manufacturer tested capacities and calculations. Conditions may exist that require different connections than indicated. Refer to manufacturer publication for additional information.

Bottom chord checked for 10.00 psf non-concurrent live load.

Deflection meets L/240 live and L/180 total load.

110 mph wind, 15.00 ft mean hgt, ASCE 7-05, CLOSED bldg, not located within 9.00 ft from roof edge, CAT II, EXP B, wind TC DL=5.0 psf, wind BC DL=5.0 psf. Iw=1.00 GCpi(+/-)=0.18

Wind loads and reactions based on MWFRS with additional C&C member design.

(a) Continuous lateral bracing equally spaced on member.

Truss passed check for 20 psf additional bottom chord live load in areas with 42"-high x 24"-wide clearance.

MWFRS loads based on trusses located at least 30.00 ft. from roof edge.

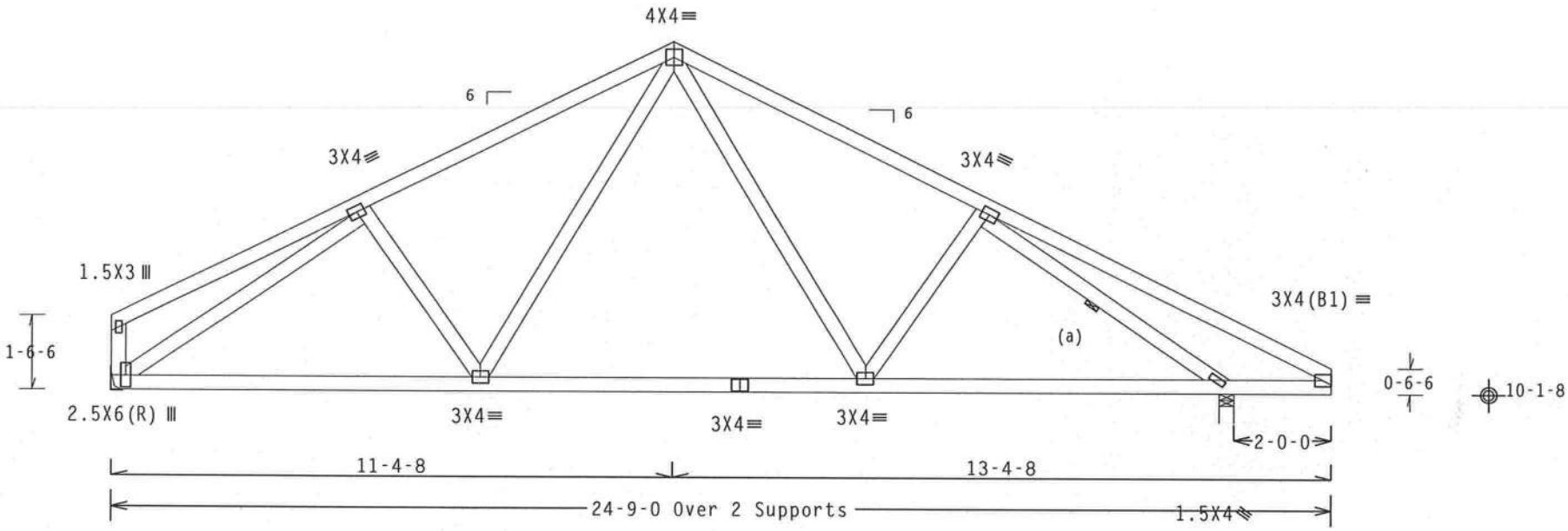

R=988 U=0
RL=122/-132 H=Simpson LUS26
Supported Member Face: (4) 0.148"x3" nails
Supporting Member Face: (4) 0.148"x3" nails
Supporting Member : (1) 2x6 SP #2

R=1182 U=0 W=3.5"

Design Crit: FBC2007Res/TPI-2002(STD)

PLT TYP. Wave FT/RT=10%(0%)/0(0) 10.03.04.0601.16 QTY: FL/-/4/-/-/R/- Scale =.3125"/Ft.

ALPINE
ITW Building Components Group Inc.
Haines City, FL 33844
FL COA #0 278

WARNING READ AND FOLLOW ALL NOTES ON THIS SHEET!
IMPORTANT FURNISH THIS DESIGN TO ALL CONTRACTORS INCLUDING INSTALLERS.

Trusses require extreme care in fabricating, handling, shipping, installing and bracing. Refer to and follow the latest edition of BCSI (Building Component Safety Information, by TPI and WTCA) for general practices prior to performing these functions. Installers shall provide temporary bracing per BCSI. Unless noted otherwise, top chord shall have properly attached structural sheathing and bottom chord shall have a properly attached rigid ceiling. Locations shown for permanent lateral restraint of webs shall have bracing installed per BCSI sections B3, B7 or B10, as applicable.

ITW Building Components Group Inc. (ITWBCG) shall not be responsible for any deviation from this design, any failure to build the truss in conformance with ANSI/TPI 1, or for handling, shipping, installation or bracing of trusses. Apply plates to each face of truss and position as shown above and on the Joint Details, unless noted otherwise. Refer to drawings 160A-Z for standard plate positions. A seal on this drawing or cover page listing this drawing, indicates acceptance of professional engineering responsibility solely for the design shown. The suitability and use of this design for any structure is the responsibility of the Building Designer per ANSI/TPI 1 Sec.2. For more information see: This job's general notes page; ITW-BCG: www.itwbcg.com; TPI: www.tpinst.org; WTCA: www.sbcindustry.com; ICC: www.iccsafe.org

DOUGLAS FLEMING LICENSE No. 66648 STATE OF FLORIDA PROFESSIONAL ENGINEER

06/18/2012

TC LL	20.0 PSF	REF R487-- 29454
TC DL	10.0 PSF	DATE 06/15/12
BC DL	10.0 PSF	DRW HCUSR487 12167034
BC LL	0.0 PSF	HC-ENG DF/DF
TOT.LD.	40.0 PSF	SEQN- 262990
DUR.FAC.	1.25	
SPACING	24.0"	JREF- 1UMZ487_Z01

THIS DWG PREPARED FROM COMPUTER INPUT (LOADS & DIMENSIONS) SUBMITTED BY TRUSS MFR.

Top chord 2x4 SP #1
Bot chord 2x4 SP #1

110 mph wind, 15.00 ft mean hgt, ASCE 7-05, CLOSED bldg, Located anywhere in roof, CAT II, EXP B, wind TC DL=5.0 psf, wind BC DL=5.0 psf. Iw=1.00 GCpi(+/-)=0.18

Bottom chord checked for 10.00 psf non-concurrent live load.

Provide (2) 16d common nails(0.162"x3.5"), toe nailed at Top chord.
Provide (2) 16d common nails(0.162"x3.5"), toe nailed at Bot chord.

Negative reaction(s) of -266# MAX. (See below) from a non-wind load case requires uplift connection.

Wind loads and reactions based on MWFRS with additional C&C member design.

Left and right cantilevers are exposed to wind

Deflection meets L/240 live and L/180 total load.

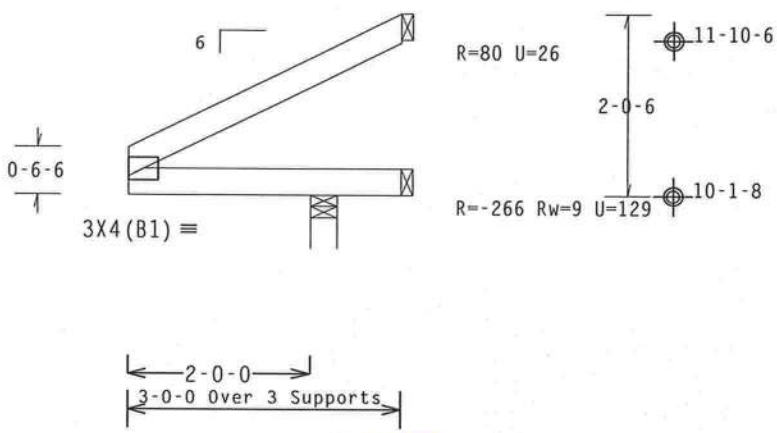

Design Crit: FBC2007Res/TPI-2002(STD)
FT/RT=10%(0%)/0(0)

PLT TYP. Wave

10.03.04.0607.16 QTY: 8 FL/-/4/-/-/R/- Scale =.5"/Ft.

ALPINE
ITW Building Components Group Inc.
Haines City, FL 33844
FL COA #0 278

WARNING READ AND FOLLOW ALL NOTES ON THIS SHEET!
IMPORTANT FURNISH THIS DESIGN TO ALL CONTRACTORS INCLUDING INSTALLERS.

Trusses require extreme care in fabricating, handling, shipping, installing and bracing. Refer to and follow the latest edition of BCSI (Building Component Safety Information, by TPI and WTCA) for general practices prior to performing these functions. Installers shall provide temporary bracing per BCSI. Unless noted otherwise, top chord shall have properly attached structural sheathing and bottom chord shall have a properly attached rigid ceiling. Locations shown for permanent lateral restraint of webs shall have bracing installed per BCSI sections B3, B7 or B10, as applicable.

ITW Building Components Group Inc. (ITWBCG) shall not be responsible for any deviation from this design, any failure to build the truss in conformance with ANSI/TPI 1, or for handling, shipping, installation and bracing of trusses. Apply plates to each face of truss and position as shown above and on the Joint Details, unless noted otherwise. Refer to drawings 160A-Z for standard plate positions. A seal on this drawing or cover page listing this drawing, indicates acceptance of professional engineering responsibility solely for the design shown. The suitability and use of this design for any structure is the responsibility of the Building Designer per ANSI/TPI 1 Sec.2. For more information see: This job's general notes page; ITW-BCG: www.itwbcg.com; TPI: www.tpinst.org; WTCA: www.sbcindustry.com; ICC: www.iccsafe.org

DOUGLAS FLEMING LICENSE No. 66648 STATE OF FLORIDA PROFESSIONAL ENGINEER

06/18/2012

TC LL	20.0 PSF	REF R487-- 29455
TC DL	10.0 PSF	DATE 06/15/12
BC DL	10.0 PSF	DRW HCUSR487 12167004
BC LL	0.0 PSF	HC-ENG DF/DF
TOT.LD.	40.0 PSF	SEQN- 261636
DUR.FAC.	1.25	
SPACING	24.0"	JREF- 1UMZ487_Z01

(12-010rev--BRYAN ZECHER Neely Residence -- 2682 NW Noegel Rd. Lake City, FL 3 - CJ1C)

THIS DWG PREPARED FROM COMPUTER INPUT (LOADS & DIMENSIONS) SUBMITTED BY TRUSS MFR.

Top chord 2x4 SP #1
Bot chord 2x4 SP #1

Bottom chord checked for 10.00 psf non-concurrent live load.

Deflection meets L/240 live and L/180 total load.

Provide (2) 16d common nails(0.162"x3.5"), toe nailed at Top chord.
Provide (2) 16d common nails(0.162"x3.5"), toe nailed at Bot chord.

110 mph wind, 15.00 ft mean hgt, ASCE 7-05, CLOSED bldg, Located anywhere in roof, CAT II, EXP B, wind TC DL=5.0 psf, wind BC DL=5.0 psf. Iw=1.00 GCpi(+/-)=0.18

Wind loads and reactions based on MWFRS with additional C&C member design.

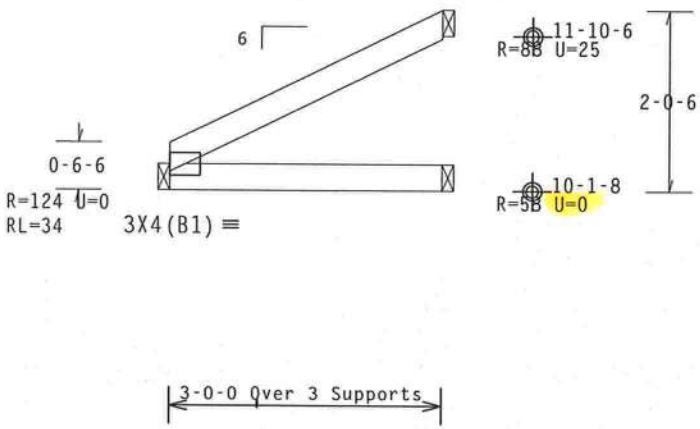

PLT TYP. Wave

Design Crit: FBC2007Res/TPI-2002(STD)
FT/RT=10%(0%)/0(0)

10.03.04 0603.16 QTY:4

FL/-/4/-/-/R/-

Scale =.5"/Ft.

ALPINE
ITW Building Components Group Inc.
Haines City, FL 33844
FL COA #0 278

WARNING READ AND FOLLOW ALL NOTES ON THIS SHEET!
IMPORTANT FURNISH THIS DESIGN TO ALL CONTRACTORS INCLUDING INSTALLERS.

Trusses require extreme care in fabricating, handling, shipping, installing and bracing. Refer to and follow the latest edition of BCSI (Building Component Safety Information, by TPI and WTCA) for safe practices prior to performing these functions. Installers shall provide temporary bracing per BCSI. Unless noted otherwise, top chord shall have properly attached structural sheathing and bottom chord shall have a properly attached rigid ceiling. Locations shown for permanent lateral restraint of webs shall have bracing installed per BCSI sections B3, B7 or B10, as applicable.

ITW Building Components Group Inc. (ITWBCG) shall not be responsible for any deviation from this design, any failure to build the truss in conformance with ANSI/TPI 1, or for handling, shipping, installation and bracing of trusses. Apply plates to each face of truss and position as shown above and on the Joint Details, unless noted otherwise. Refer to drawings 160A-Z for standard plate positions. A seal on this drawing or cover page listing this drawing, indicates acceptance of professional engineering responsibility solely for the design shown. The suitability and use of this design for any structure is the responsibility of the Building Designer per ANSI/TPI 1 Sec.2. For more information see: This job's general notes page; ITW-BCG: www.itwbcg.com; TPI: www.tpinst.org; WTCA: www.sbcindustry.com; ICC: www.iccsafe.org

DOUGLAS FLEMING LICENSE No. 66648 STATE OF FLORIDA PROFESSIONAL ENGINEER
06/18/2012

TC LL	20.0 PSF	REF	R487-- 29456
TC DL	10.0 PSF	DATE	06/15/12
BC DL	10.0 PSF	DRW	HCUSR487 12167020
BC LL	0.0 PSF	HC-ENG	DF/DF *
TOT.LD.	40.0 PSF	SEQN-	261741
DUR.FAC.	1.25		
SPACING	24.0"	JREF-	1UMZ487_Z01

(12-010rev--BRYAN ZECHER Neely Residence -- 2682 NW Noegel Rd. Lake City, FL 3 - CJ3)

THIS DWG PREPARED FROM COMPUTER INPUT (LOADS & DIMENSIONS) SUBMITTED BY TRUSS MFR.

Top chord 2x4 SP #1
Bot chord 2x4 SP #1
Webs 2x4 SP #3

Left and right cantilevers are exposed to wind

Bottom chord checked for 10.00 psf non-concurrent live load.

Provide (2) 16d common nails(0.162"x3.5"), toe nailed at Top chord.
Provide (2) 16d common nails(0.162"x3.5"), toe nailed at Bot chord.

110 mph wind, 15.00 ft mean hgt, ASCE 7-05, CLOSED bldg, Located anywhere in roof, CAT II, EXP B, wind TC DL=5.0 psf, wind BC DL=5.0 psf. Iw=1.00 GCpi(+/-)=0.18

Wind loads and reactions based on MWFRS with additional C&C member design.

Deflection meets L/240 live and L/180 total load.

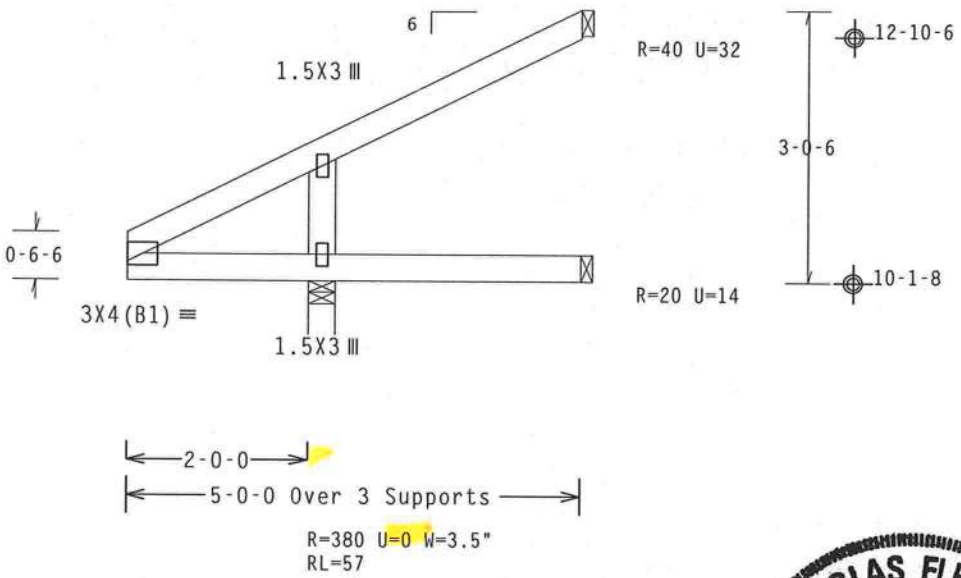

PLT TYP. Wave

Design Crit: FBC2007Res/TPI-2002(STD)
FT/RT=10%(0%)/0(0)

10.03.04.0601.16 QTY 18 FL/-/4/-/-/R/- Scale =.5"/Ft.

DOUGLAS FLEMING LICENSE No. 66648 STATE OF FLORIDA PROFESSIONAL ENGINEER

06/18/2012

ALPINE
ITW Building Components Group Inc.
Haines City, FL 33844
FL COA #0 278

WARNING READ AND FOLLOW ALL NOTES ON THIS SHEET!
IMPORTANT FURNISH THIS DESIGN TO ALL CONTRACTORS INCLUDING INSTALLERS.

Trusses require extreme care in fabricating, handling, shipping, installing and bracing. Refer to and follow the latest edition of BCSI (Building Component Safety Information, by TPI and WTCA) for safety practices prior to performing these functions. Installers shall provide temporary bracing per BCSI. Unless noted otherwise, top chord shall have properly attached structural sheathing and bottom chord shall have a properly attached rigid ceiling. Locations shown for permanent lateral restraint of webs shall have bracing installed per BCSI sections B3, B7 or B10, as applicable.

ITW Building Components Group Inc. (ITWBCG) shall not be responsible for any deviation from this design, any failure to build the truss in conformance with ANSI/TPI 1, or for handling, shipping, installing and bracing of trusses. Apply plates to each face of truss and position as shown above and on the Joint Details, unless noted otherwise. Refer to drawings 160A-Z for standard plate positions. A seal on this drawing or cover page listing this drawing, indicates acceptance of professional engineering responsibility solely for the design shown. The suitability and use of this design for any structure is the responsibility of the Building Designer per ANSI/TPI 1 Sec.2. For more information see: This job's general notes page; ITW-BCG: www.itwbcg.com; TPI: www.tpinst.org; WTCA: www.sbcindustry.com; ICC: www.iccsafe.org

TC LL	20.0 PSF	REF	R487-- 29457
TC DL	10.0 PSF	DATE	06/15/12
BC DL	10.0 PSF	DRW	HCUSR487 12167042
BC LL	0.0 PSF	HC-ENG	DF/DF
TOT.LD.	40.0 PSF	SEQN-	261625
DUR.FAC.	1.25		
SPACING	24.0"	JREF-	1UMZ487_Z01

THIS DWG PREPARED FROM COMPUTER INPUT (LOADS & DIMENSIONS) SUBMITTED BY TRUSS MFR.

Top chord 2x4 SP #1
Bot chord 2x4 SP #1
Webs 2x4 SP #3

Left and right cantilevers are exposed to wind

Bottom chord checked for 10.00 psf non-concurrent live load.

Deflection meets L/240 live and L/180 total load.

Provide (2) 16d common nails(0.162"x3.5"), toe nailed at Top chord.
Provide (2) 16d common nails(0.162"x3.5"), toe nailed at Bot chord.

Negative reaction(s) of -284# MAX. (See below) from a non-wind load case requires uplift connection.

110 mph wind, 15.00 ft mean hgt, ASCE 7-05, CLOSED bldg, not located within 4.50 ft from roof edge, CAT II, EXP B, wind TC DL=5.0 psf, wind BC DL=5.0 psf. Iw=1.00 GCpi(+/-)=0.18

Wind loads and reactions based on MWFRS with additional C&C member design.

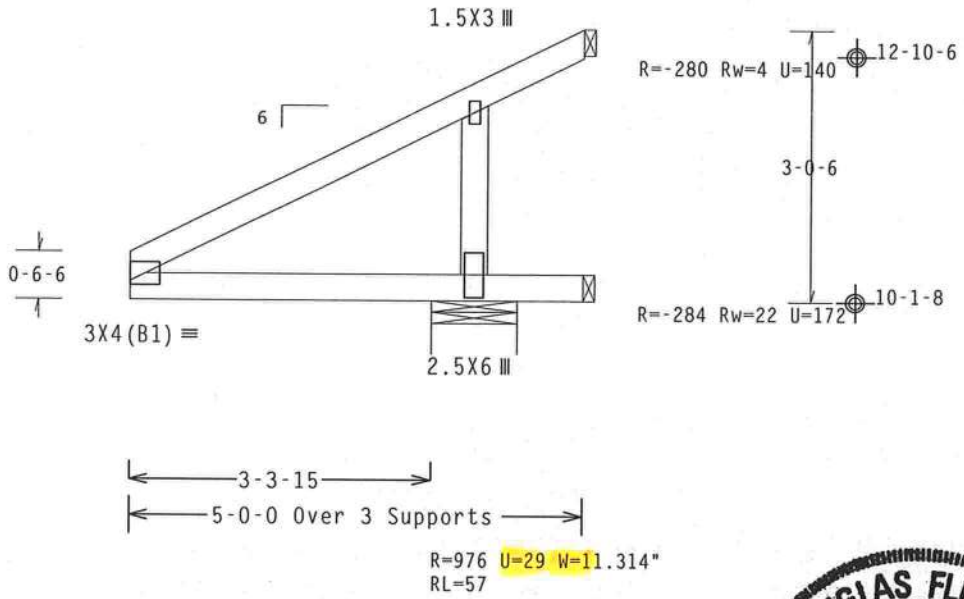

Design Crit: FBC2007Res/TPI-2002(STD)

PLT TYP. Wave

FT/RT=10%(0%)/0(0) 10.03.04.0601.16 QTY 4 FL/-/4/-/-/R/- Scale =.5"/Ft.

ALPINE
ITW Building Components Group Inc.
Haines City, FL 33844
FL COA #0 278

WARNING READ AND FOLLOW ALL NOTES ON THIS SHEET!
IMPORTANT FURNISH THIS DESIGN TO ALL CONTRACTORS INCLUDING INSTALLERS.

Trusses require extreme care in fabricating, handling, shipping, installing and bracing. Refer to and follow the latest edition of BCSI (Building Component Safety Information, by TPI and WTCA) for safety practices prior to performing these functions. Installers shall provide temporary bracing per BCSI. Unless noted otherwise, top chord shall have properly attached structural sheathing and bottom chord shall have a properly attached rigid ceiling. Locations shown for permanent lateral restraint of webs shall have bracing installed per BCSI sections B3, B7 or B10, as applicable.

ITW Building Components Group Inc. (ITWBCG) shall not be responsible for any deviation from this design, any failure to build the truss in conformance with ANSI/TPI 1, or for handling, shipping, installing and bracing of trusses. Apply plates to each face of truss and position as shown above and on the Joint Details, unless noted otherwise. Refer to drawings 160A-Z for standard plate positions. A seal on this drawing or cover page listing this drawing, indicates acceptance of professional engineering responsibility solely for the design shown. The suitability and use of this design for any structure is the responsibility of the Building Designer per ANSI/TPI 1 Sec.2. For more information see: This job's general notes page; ITW-BCG: www.itwbcg.com; TPI: www.tpinst.org; WTCA: www.sbcindustry.com; ICC: www.iccsafe.org

DOUGLAS FLEMING LICENSE No. 66648 STATE OF FLORIDA PROFESSIONAL ENGINEER

06/18/2012

TC LL	20.0 PSF	REF	R487-- 29458
TC DL	10.0 PSF	DATE	06/15/12
BC DL	10.0 PSF	DRW	HCUSR487 12167030
BC LL	0.0 PSF	HC-ENG	DF/DF
TOT.LD.	40.0 PSF	SEQN-	261735
DUR.FAC.	1.25		
SPACING	24.0"	JREF-	1UMZ487_Z01

THIS DWG PREPARED FROM COMPUTER INPUT (LOADS & DIMENSIONS) SUBMITTED BY TRUSS MFR.

Top chord 2x4 SP #1
Bot chord 2x4 SP #1
Webs 2x4 SP #3

Left and right cantilevers are exposed to wind

Bottom chord checked for 10.00 psf non-concurrent live load.

Provide (2) 16d common nails(0.162"x3.5"), toe nailed at Top chord.
Provide (2) 16d common nails(0.162"x3.5"), toe nailed at Bot chord.

110 mph wind, 15.00 ft mean hgt, ASCE 7-05, CLOSED bldg, not located within 4.50 ft from roof edge, CAT II, EXP B, wind TC DL=5.0 psf, wind BC DL=5.0 psf. Iw=1.00 GCpi(+/-)=0.18

Wind loads and reactions based on MWFRS with additional C&C member design.

Deflection meets L/240 live and L/180 total load.

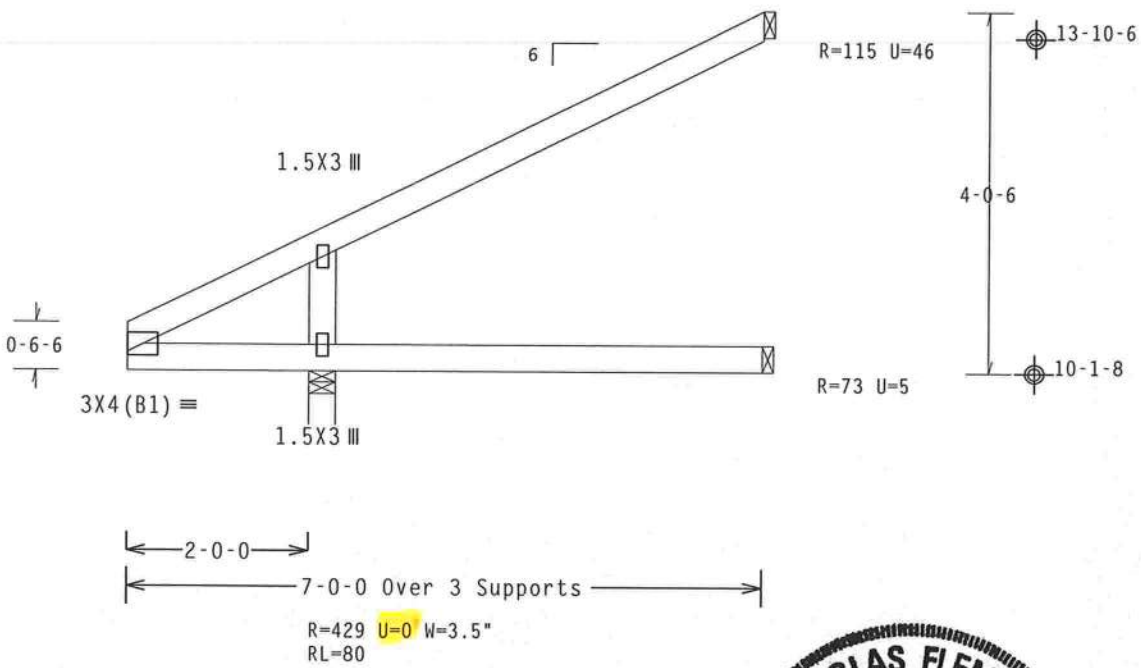

Design Crit: FBC2007Res/TPI-2002(STD)
FT/RT=10%(0%)/0(0)

PLT TYP. Wave

10.03.04.0601.16 QTY 21 FL/-/4/-/-/R/- Scale =.5"/Ft.

DOUGLAS FLEMING LICENSE No. 66648 STATE OF FLORIDA PROFESSIONAL ENGINEER

06/18/2012

ALPINE
ITW Building Components Group Inc.
Haines City, FL 33844
FL COA #0 278

WARNING READ AND FOLLOW ALL NOTES ON THIS SHEET!
IMPORTANT FURNISH THIS DESIGN TO ALL CONTRACTORS INCLUDING INSTALLERS.

Trusses require extreme care in fabricating, handling, shipping, installing and bracing. Refer to and follow the latest edition of BCSI (Building Component Safety Information, by TPI and WTCA) for safety practices prior to performing these functions. Installers shall provide temporary bracing per BCSI. Unless noted otherwise, top chord shall have properly attached structural sheathing and bottom chord shall have a properly attached rigid ceiling. Locations shown for permanent lateral restraint of webs shall have bracing installed per BCSI sections B3, B7 or B10, as applicable.

ITW Building Components Group Inc. (ITWBCG) shall not be responsible for any deviation from this design, any failure to build the truss in conformance with ANSI/TPI 1, or for handling, shipping, installing and bracing of trusses. Apply plates to each face of truss and position as shown above and on the Joint Details, unless noted otherwise. Refer to drawings 160A-Z for standard plate positions. A seal on this drawing or cover page listing this drawing, indicates acceptance of professional engineering responsibility solely for the design shown. The suitability and use of this design for any structure is the responsibility of the Building Designer per ANSI/TPI 1 Sec.2. For more information see: This job's general notes page; ITW-BCG: www.itwbcg.com; TPI: www.tpinst.org; WTCA: www.sbcindustry.com; ICC: www.iccsafe.org

TC LL	20.0 PSF	REF	R487-- 29459
TC DL	10.0 PSF	DATE	06/15/12
BC DL	10.0 PSF	DRW	HCUSR487 12167040
BC LL	0.0 PSF	HC-ENG	DF/DF
TOT.LD.	40.0 PSF	SEQN-	261628
DUR.FAC.	1.25		
SPACING	24.0"	JREF-	1UMZ487_Z01

(12-010rev--BRYAN ZECHER Neely Residence -- 2682 NW Noegel Rd. Lake City, FL 3 - EJ7)

THIS DWG PREPARED FROM COMPUTER INPUT (LOADS & DIMENSIONS) SUBMITTED BY TRUSS MFR.

Top chord 2x4 SP #1
Bot chord 2x4 SP #1
Webs 2x4 SP #3

Left and right cantilevers are exposed to wind

Bottom chord checked for 10.00 psf non-concurrent live load.

MWFRS loads based on trusses located at least 7.50 ft. from roof edge.

110 mph wind, 15.00 ft mean hgt, ASCE 7-05, CLOSED bldg, not located within 9.00 ft from roof edge, CAT II, EXP B, wind TC DL=5.0 psf, wind BC DL=5.0 psf. Iw=1.00 GCpi(+/-)=0.18

Wind loads and reactions based on MWFRS with additional C&C member design.

Deflection meets L/240 live and L/180 total load.

Provide (2) 16d common nails(0.162"x3.5"), toe nailed at Top chord.
Provide (2) 16d common nails(0.162"x3.5"), toe nailed at Bot chord.

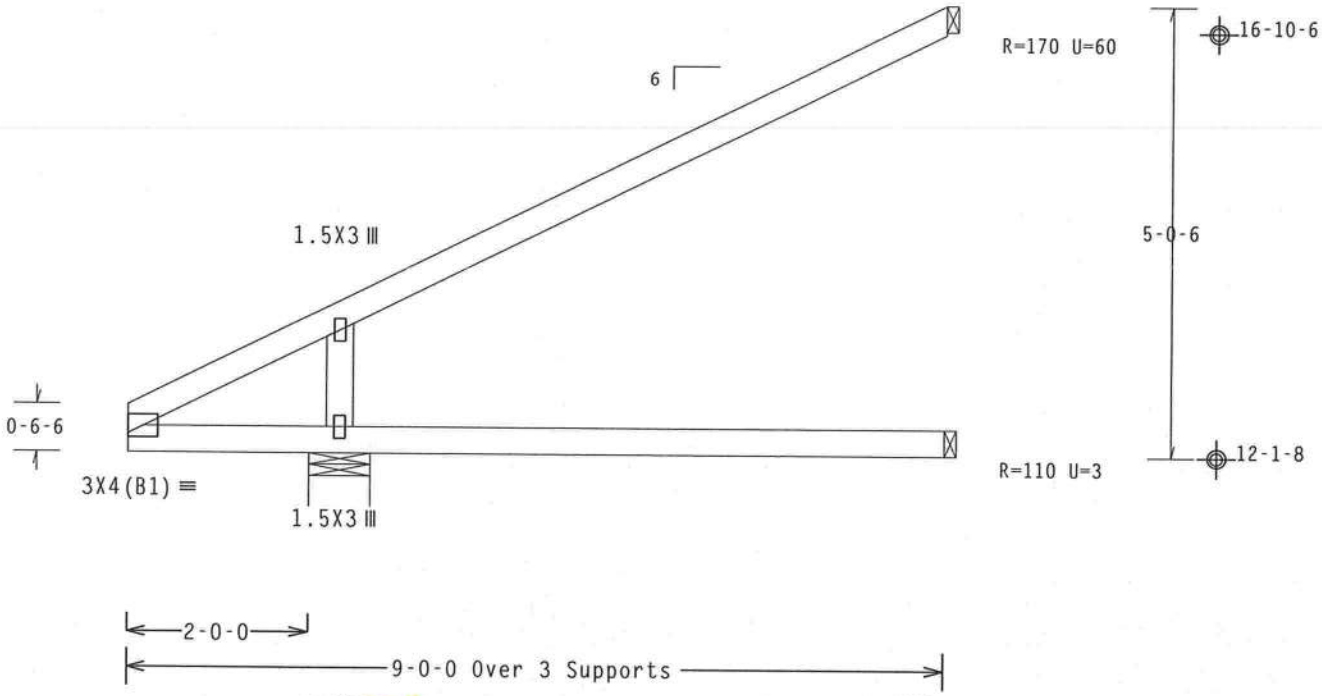

Design Crit: FBC2007Res/TPI-2002(STD)
FT/RT=10%(0%)/0(0)

PLT TYP. Wave

10.03.04.0601.16 QTY 37 FL/-/4/-/-/R/-

Scale =.5"/Ft.

ALPINE
ITW Building Components Group Inc.
Haines City, FL 33844
FL COA #0 278

WARNING READ AND FOLLOW ALL NOTES ON THIS SHEET!
IMPORTANT FURNISH THIS DESIGN TO ALL CONTRACTORS INCLUDING INSTALLERS.

Trusses require extreme care in fabricating, handling, shipping, installing and bracing. Refer to and follow the latest edition of BCSI (Building Component Safety Information, by TPI and WTCA) for safety practices prior to performing these functions. Installers shall provide temporary bracing per BCSI. Unless noted otherwise, top chord shall have properly attached structural sheathing and bottom chord shall have a properly attached rigid ceiling. Locations shown for permanent lateral restraint of webs shall have bracing installed per BCSI sections B3, B7 or B10, as applicable.

ITW Building Components Group Inc. (ITWBCG) shall not be responsible for any deviation from this design, any failure to build the truss in conformance with ANSI/TPI 1, or for handling, shipping, installation and bracing of trusses. Apply plates to each face of truss and position as shown above and on the Joint Details, unless noted otherwise. Refer to drawings 160A-Z for standard plate positions. A seal on this drawing or cover page listing this drawing, indicates acceptance of professional engineering responsibility solely for the design shown. The suitability and use of this design for any structure is the responsibility of the Building Designer per ANSI/TPI 1 Sec.2. For more information see: This job's general notes page; ITW-BCG: www.itwbcg.com; TPI: www.tpinst.org; WTCA: www.sbcindustry.com; ICC: www.iccsafe.org

DOUGLAS FLEMING LICENSE No. 66648 STATE OF FLORIDA PROFESSIONAL ENGINEER

06/18/2012

TC LL	20.0 PSF	REF	R487-- 29460
TC DL	10.0 PSF	DATE	06/15/12
BC DL	10.0 PSF	DRW	HCUSR487 12167017
BC LL	0.0 PSF	HC-ENG	DF/DF
TOT.LD.	40.0 PSF	SEQN-	261631
DUR.FAC.	1.25		
SPACING	24.0"	JREF-	1UMZ487_Z01

THIS DWG PREPARED FROM COMPUTER INPUT (LOADS & DIMENSIONS) SUBMITTED BY TRUSS MFR.

Top chord 2x4 SP #1
Bot chord 2x4 SP #1
Webs 2x4 SP #3

Bottom chord checked for 10.00 psf non-concurrent live load.

Deflection meets L/240 live and L/180 total load.

Provide (2) 16d common nails(0.162"x3.5"), toe nailed at Top chord.
Provide (2) 16d common nails(0.162"x3.5"), toe nailed at Bot chord.

110 mph wind, 15.00 ft mean hgt, ASCE 7-05, CLOSED bldg, Located anywhere in roof, CAT II, EXP B, wind TC DL=5.0 psf, wind BC DL=5.0 psf. Iw=1.00 GCpi(+/-)=0.18

Wind loads and reactions based on MWFRS with additional C&C member design.

MWFRS loads based on trusses located at least 7.50 ft. from roof edge.

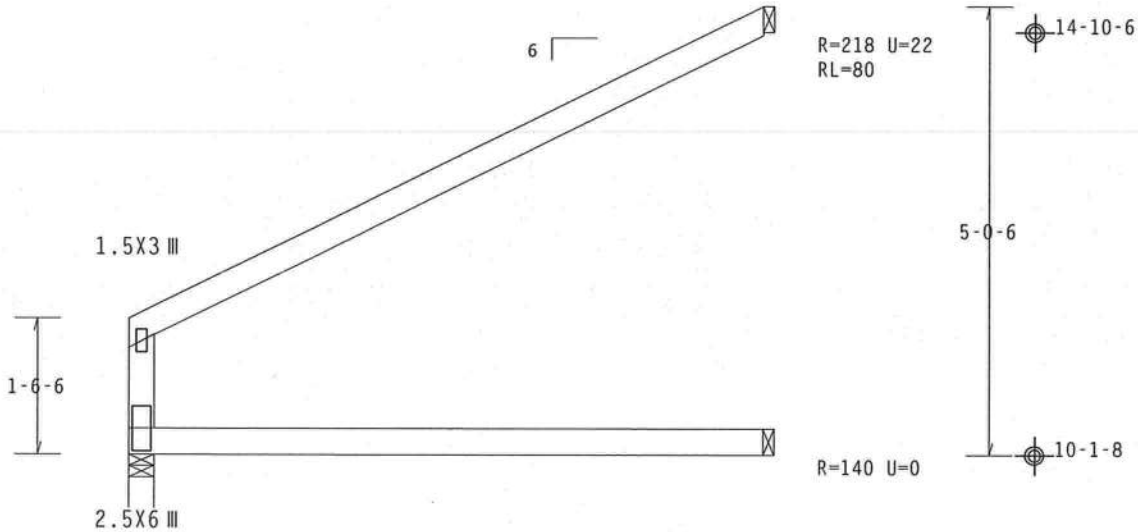

R=288 U=44 W=3.5"

Design Crit: FBC2007Res/TPI-2002(STD)
FT/RT=10%(0%)/0(0)

PLT TYP. Wave

10.03.04.0601.16 QTY 1

FL/-/4/-/-/R/-

Scale =.5"/Ft.

ALPINE
ITW Building Components Group Inc.
Haines City, FL 33844
FL COA #0 278

WARNING READ AND FOLLOW ALL NOTES ON THIS SHEET!
IMPORTANT FURNISH THIS DESIGN TO ALL CONTRACTORS INCLUDING INSTALLERS.

Trusses require extreme care in fabricating, handling, shipping, installing and bracing. Refer to and follow the latest edition of BCSI (Building Component Safety Information, by TPI and WTCA) for safety practices prior to performing these functions. Installers shall provide temporary bracing per BCSI. Unless noted otherwise, top chord shall have properly attached structural sheathing and bottom chord shall have a properly attached rigid ceiling. Locations shown for permanent lateral restraint of webs shall have bracing installed per BCSI sections B3, B7 or B10, as applicable.

ITW Building Components Group Inc. (ITWBCG) shall not be responsible for any deviation from this design, any failure to build the truss in conformance with ANSI/TPI 1, or for handling, shipping, installing & bracing of trusses. Apply plates to each face of truss and position as shown above and on the Joint Details, unless noted otherwise. Refer to drawings 160A-Z for standard plate positions. A seal on this drawing or cover page listing this drawing, indicates acceptance of professional engineering responsibility solely for the design shown. The suitability and use of this design for any structure is the responsibility of the Building Designer per ANSI/TPI 1 Sec.2. For more information see: This job's general notes page; ITW-BCG: www.itwbcg.com; TPI: www.tpinst.org; WTCA: www.sbcindustry.com; ICC: www.iccsafe.org

DOUGLAS FLEMING LICENSE No. 66648 STATE OF FLORIDA PROFESSIONAL ENGINEER

06/18/2012

TC LL	20.0 PSF	REF	R487-- 29461
TC DL	10.0 PSF	DATE	06/15/12
BC DL	10.0 PSF	DRW	HCUSR487 12167018
BC LL	0.0 PSF	HC-ENG	DF/DF *
TOT.LD.	40.0 PSF	SEQN-	261770
DUR.FAC.	1.25		
SPACING	24.0"	JREF-	1UMZ487_Z01

Top chord 2x4 SP #1
Bot chord 2x4 SP #1
Webs 2x4 SP #3

Left and right cantilevers are exposed to wind

Bottom chord checked for 10.00 psf non-concurrent live load.

MWFRS loads based on trusses located at least 7.50 ft. from roof edge.

110 mph wind, 15.00 ft mean hgt, ASCE 7-05, CLOSED bldg, not located within 9.00 ft from roof edge, CAT II, EXP B, wind TC DL=5.0 psf, wind BC DL=5.0 psf. Iw=1.00 GCpi(+/-)=0.18

Wind loads and reactions based on MWFRS with additional C&C member design.

Deflection meets L/240 live and L/180 total load.

Provide (2) 16d common nails(0.162"x3.5"), toe nailed at Top chord.
Provide (2) 16d common nails(0.162"x3.5"), toe nailed at Bot chord.

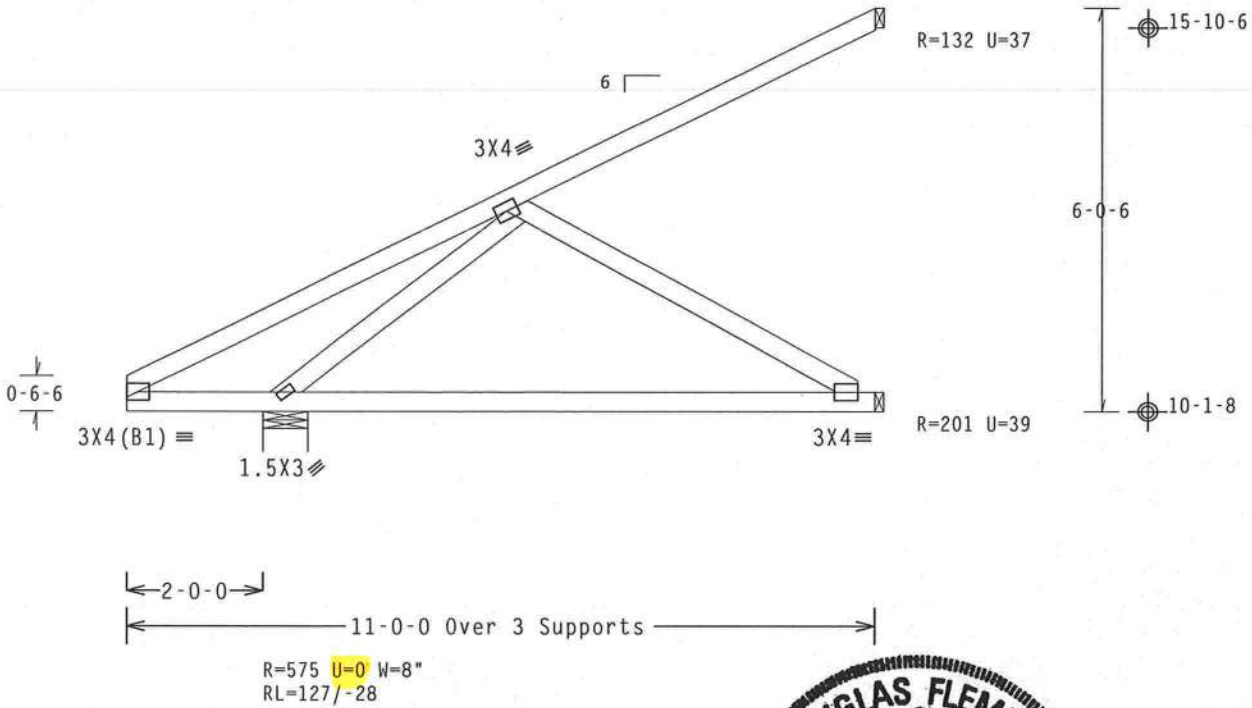

Design Crit: FBC2007Res/TPI-2002(STD)
FT/RT=10%(0%)/0(0)

PLT TYP. Wave

10.03.04.0601.16 QTY 48 FL/-/4/-/-/R/- Scale =.375"/Ft.

ALPINE
ITW Building Components Group Inc.
Haines City, FL 33844
FL COA #0 278

WARNING READ AND FOLLOW ALL NOTES ON THIS SHEET!
IMPORTANT FURNISH THIS DESIGN TO ALL CONTRACTORS INCLUDING INSTALLERS.

Trusses require extreme care in fabricating, handling, shipping, installing and bracing. Refer to and follow the latest edition of BCSI (Building Component Safety Information, by TPI and WTCA) for safety practices prior to performing these functions. Installers shall provide temporary bracing per BCSI. Unless noted otherwise, top chord shall have properly attached structural sheathing and bottom chord shall have a properly attached rigid ceiling. Locations shown for permanent lateral restraint of webs shall have bracing installed per BCSI sections B3, B7 or B10, as applicable.

ITW Building Components Group Inc. (ITWBCG) shall not be responsible for any deviation from this design, any failure to build the truss in conformance with ANSI/TPI 1, or for handling, shipping, installing and bracing of trusses. Apply plates to each face of truss and position as shown above and on the Joint Details, unless noted otherwise. Refer to drawings 160A-Z for standard plate positions. A seal on this drawing or cover page listing this drawing, indicates acceptance of professional engineering responsibility solely for the design shown. The suitability and use of this design for any structure is the responsibility of the Building Designer per ANSI/TPI 1 Sec.2. For more information see: This job's general notes page; ITW-BCG: www.itwbcg.com; TPI: www.tpinst.org; WTCA: www.sbcindustry.com; ICC: www.iccsafe.org

DOUGLAS FLEMING LICENSE No.66648 STATE OF FLORIDA PROFESSIONAL ENGINEER
06/18/2012

TC LL	20.0 PSF	REF	R487-- 29462
TC DL	10.0 PSF	DATE	06/15/12
BC DL	10.0 PSF	DRW	HCUSR487 12167041
BC LL	0.0 PSF	HC-ENG	DF/DF
TOT.LD.	40.0 PSF	SEQN-	261728
DUR.FAC.	1.25		
SPACING	24.0"	JREF-	1UMZ487_Z01

Top chord 2x4 SP #1
Bot chord 2x4 SP #1
Webs 2x4 SP #3

Left and right cantilevers are exposed to wind

The following members need concentrated loads at the heel: 5-0-0 span/setback member on the 2-0-0 cant side requires 45 lbs and the 5-0-0 span/setback member on the 2-0-0 cant side requires 45 lbs.

Hipjack supports 7-0-0 setback jacks with 2-0-0 cantilever one face; 2-0-0 cantilever opposite face.

110 mph wind, 16.39 ft mean hgt, ASCE 7-05, CLOSED bldg, Located anywhere in roof, CAT II, EXP B, wind TC DL=5.0 psf, wind BC DL=5.0 psf. Iw=1.00 GCpi(+/-)=0.18

Wind loads and reactions based on MWFRS with additional C&C member design.

Sub-fascia beam assumptions: 5-0-0 sub-fascia beam on the 2-0-0 cantilever side. 5-0-0 sub-fascia beam on the 2-0-0 cantilever side.

Deflection meets L/240 live and L/180 total load.

Provide (2) 16d common nails(0.162"x3.5"), toe nailed at Top chord.
Provide (2) 16d common nails(0.162"x3.5"), toe nailed at Bot chord.

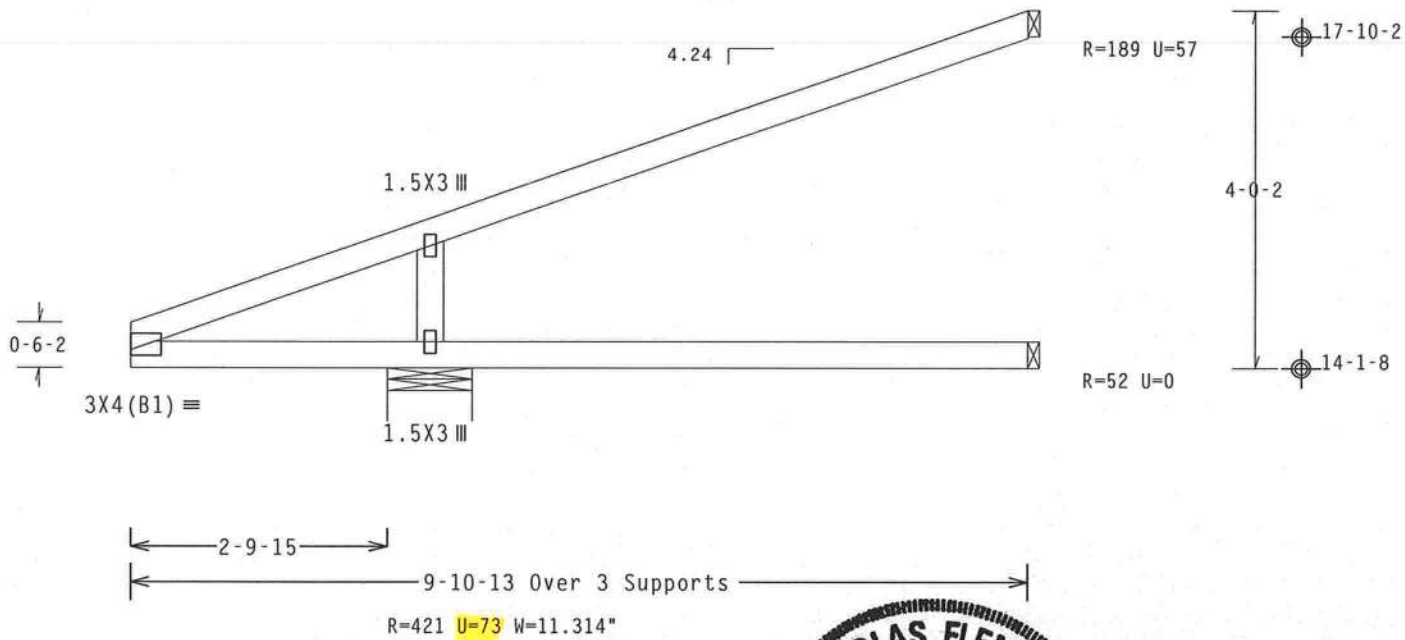

Design Crit: FBC2007Res/TPI-2002(STD)
FT/RT=10%(0%)/0(0)

PLT TYP. Wave

10.03.04 0603.16 QTY:2

FL/-/4/-/-/R/- Scale =.5"/Ft.

TC LL	20.0 PSF	REF R487-- 29463
TC DL	10.0 PSF	DATE 06/15/12
BC DL	10.0 PSF	DRW HCUSR487 12167007
BC LL	0.0 PSF	HC-ENG DF/DF
TOT.LD.	40.0 PSF	SEQN- 261732
DUR.FAC.	1.25	
SPACING	24.0"	JREF- 1UMZ487_Z01

ALPINE
ITW Building Components Group Inc.
Haines City, FL 33844
FL COA #0 278

WARNING READ AND FOLLOW ALL NOTES ON THIS SHEET!
IMPORTANT FURNISH THIS DESIGN TO ALL CONTRACTORS INCLUDING INSTALLERS.

Trusses require extreme care in fabricating, handling, shipping, installing and bracing. Refer to and follow the latest edition of BCSI (Building Component Safety Information, by TPI and WTCA) for safety practices prior to performing these functions. Installers shall provide temporary bracing per BCSI. Unless noted otherwise, top chord shall have properly attached structural sheathing and bottom chord shall have a properly attached rigid ceiling. Locations shown for permanent lateral restraint of webs shall have bracing installed per BCSI sections B3, B7 or B10, as applicable.

ITW Building Components Group Inc. (ITWBCG) shall not be responsible for any deviation from this design, any failure to build the truss in conformance with ANSI/TPI 1, or for handling, shipping, installation and bracing of trusses. Apply plates to each face of truss and position as shown above and on the Joint Details, unless noted otherwise. Refer to drawings 160A-Z for standard plate positions. A seal on this drawing or cover page listing this drawing, indicates acceptance of professional engineering responsibility solely for the design shown. The suitability and use of this design for any structure is the responsibility of the Building Designer per ANSI/TPI 1 Sec.2. For more information see: This job's general notes page; ITW-BCG: www.itwbcg.com; TPI: www.tpinst.org; WTCA: www.sbcindustry.com; ICC: www.iccsafe.org

DOUGLAS FLEMING LICENSE No. 66648 STATE OF FLORIDA PROFESSIONAL ENGINEER

06/18/2012

Top chord 2x4 SP #1
Bot chord 2x4 SP #1
Webs 2x4 SP #3

Left and right cantilevers are exposed to wind

The following members need concentrated loads at the heel: 5-0-0 span/setback member on the 2-0-0 cant side requires 45 lbs and the 5-0-0 span/setback member on the 2-0-0 cant side requires 45 lbs.

Hipjack supports 9-0-0 setback jacks with 2-0-0 cantilever one face; 2-0-0 cantilever opposite face.

110 mph wind, 15.00 ft mean hgt, ASCE 7-05, CLOSED bldg, Located anywhere in roof, CAT II, EXP B, wind TC DL=5.0 psf, wind BC DL=5.0 psf. Iw=1.00 GCpi(+/-)=0.18

Wind loads and reactions based on MWFRS with additional C&C member design.

Sub-fascia beam assumptions: 5-0-0 sub-fascia beam on the 2-0-0 cantilever side. 5-0-0 sub-fascia beam on the 2-0-0 cantilever side.

Deflection meets L/240 live and L/180 total load.

Provide (3) 16d common nails(0.162"x3.5"), toe nailed at Top chord.
Provide (2) 16d common nails(0.162"x3.5"), toe nailed at Bot chord.

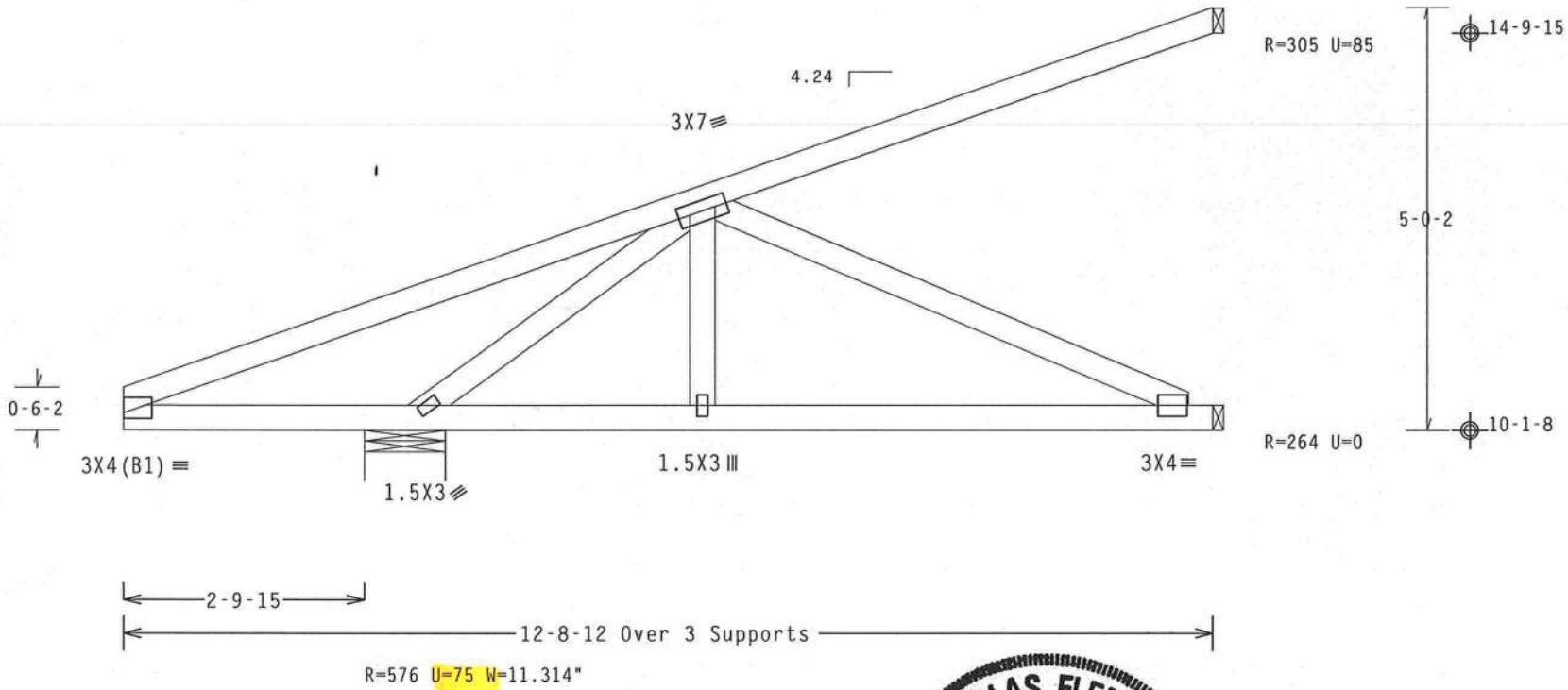

Design Crit: FBC2007Res/TPI-2002(STD)
FT/RT=10%(0%)/0(0)

PLT TYP. Wave | 10.03.04.0607.16 | QTY: | FL/-/4/-/-/R/- | Scale =.5"/Ft.

ALPINE
ITW Building Components Group Inc.
Haines City, FL 33844
FL COA #0 278

WARNING READ AND FOLLOW ALL NOTES ON THIS SHEET!
IMPORTANT FURNISH THIS DESIGN TO ALL CONTRACTORS INCLUDING INSTALLERS.

Trusses require extreme care in fabricating, handling, shipping, installing and bracing. Refer to and follow the latest edition of BCSI (Building Component Safety Information, by TPI and WTCA) for general practices prior to performing these functions. Installers shall provide temporary bracing per BCSI. Unless noted otherwise, top chord shall have properly attached structural sheathing and bottom chord shall have a properly attached rigid ceiling. Locations shown for permanent lateral restraint of webs shall have bracing installed per BCSI sections B3, B7 or B10, as applicable.

ITW Building Components Group Inc. (ITWBCG) shall not be responsible for any deviation from this design, any failure to build the truss in conformance with ANSI/TPI 1, or for handling, shipping, installation and bracing of trusses. Apply plates to each face of truss and position as shown above and on the Joint Details, unless noted otherwise. Refer to drawings 160A-Z for standard plate positions. A seal on this drawing or cover page listing this drawing, indicates acceptance of professional engineering responsibility solely for the design shown. The suitability and use of this design for any structure is the responsibility of the Building Designer per ANSI/TPI 1 Sec.2. For more information see: This job's general notes page; ITW-BCG: www.itwbcg.com; TPI: www.tpinst.org; WTCA: www.sbcindustry.com; ICC: www.iccsafe.org

DOUGLAS FLEMING LICENSE No. 66648 STATE OF FLORIDA PROFESSIONAL ENGINEER
06/18/2012

TC LL	20.0 PSF	REF R487-- 29464
TC DL	10.0 PSF	DATE 06/15/12
BC DL	10.0 PSF	DRW HCUSR487 12167003
BC LL	0.0 PSF	HC-ENG DF/DF
TOT.LD.	40.0 PSF	SEQN- 263169
DUR.FAC.	1.25	
SPACING	24.0"	JREF- 1UMZ487_Z01

Top chord 2x4 SP #1
Bot chord 2x4 SP #1
Webs 2x4 SP #3

Left and right cantilevers are exposed to wind

The following members need concentrated loads at the heel: 9-0-0 span/setback member on the 4-2-8 cant side requires 204 lbs and the 9-0-0 span/setback member on the 4-2-8 cant side requires 204 lbs.

Sub-fascia beam assumptions: 9-0-0 sub-fascia beam on the 4-2-8 cantilever side. 9-0-0 sub-fascia beam on the 4-2-8 cantilever side.

Deflection meets L/240 live and L/180 total load.

Negative reaction(s) of -337# MAX. (See below) from a non-wind load case requires uplift connection.

110 mph wind, 15.00 ft mean hgt, ASCE 7-05, CLOSED bldg, Located anywhere in roof, CAT II, EXP B, wind TC DL=5.0 psf, wind BC DL=5.0 psf. Iw=1.00 GCpi(+/-)=0.18

Wind loads and reactions based on MWFRS with additional C&C member design.

Hipjack supports 9-0-0 setback jacks with 4-2-8 cantilever one face; 4-2-8 cantilever opposite face.

Provide (2) 16d common nails(0.162"x3.5"), toe nailed at Top chord.
Provide (3) 16d common nails(0.162"x3.5"), toe nailed at Bot chord.

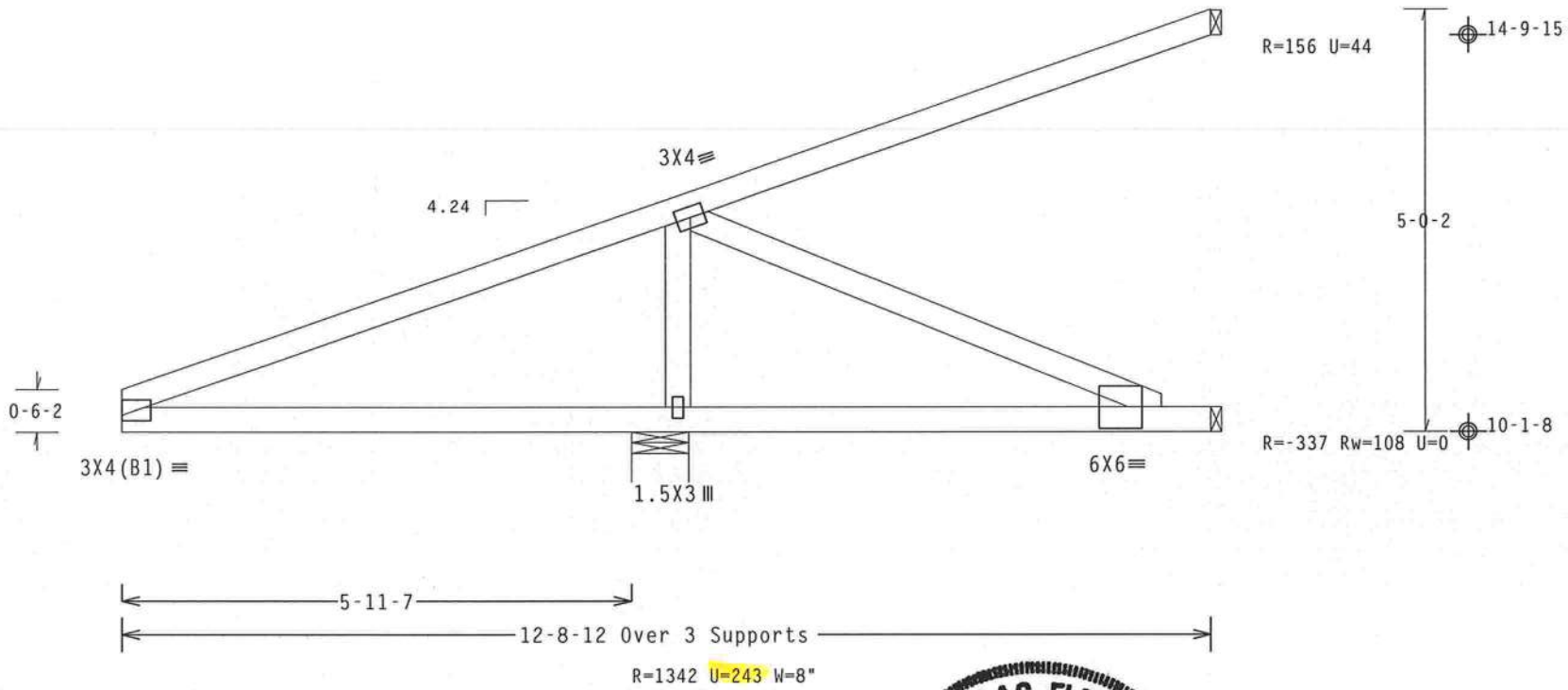

Design Crit: FBC2007Res/TPI-2002(STD)
FT/RT=10%(0%)/0(0)

PLT TYP. Wave | 10.03.04.0601.16 | QTY 1 | FL/-/4/-/-/R/- | Scale =.5"/Ft.

ALPINE
ITW Building Components Group Inc.
Haines City, FL 33844
FL COA #0 278

WARNING READ AND FOLLOW ALL NOTES ON THIS SHEET!
IMPORTANT FURNISH THIS DESIGN TO ALL CONTRACTORS INCLUDING INSTALLERS.

Trusses require extreme care in fabricating, handling, shipping, installing and bracing. Refer to and follow the latest edition of BCSI (Building Component Safety Information, by TPI and WTCA) for safety practices prior to performing these functions. Installers shall provide temporary bracing per BCSI. Unless noted otherwise, top chord shall have properly attached structural sheathing and bottom chord shall have a properly attached rigid ceiling. Locations shown for permanent lateral restraint of webs shall have bracing installed per BCSI sections B3, B7 or B10, as applicable.

ITW Building Components Group Inc. (ITWBCG) shall not be responsible for any deviation from this design, any failure to build the truss in conformance with ANSI/TPI 1, or for handling, shipping, installing and bracing of trusses. Apply plates to each face of truss and position as shown above and on the Joint Details, unless noted otherwise. Refer to drawings 160A-Z for standard plate positions. A seal on this drawing or cover page listing this drawing, indicates acceptance of professional engineering responsibility solely for the design shown. The suitability and use of this design for any structure is the responsibility of the Building Designer per ANSI/TPI 1 Sec.2. For more information see: This job's general notes page; ITW-BCG: www.itwbcg.com; TPI: www.tpinst.org; WTCA: www.sbcindustry.com; ICC: www.iccsafe.org

DOUGLAS FLEMING LICENSE No. 66648 STATE OF FLORIDA PROFESSIONAL ENGINEER
06/18/2012

TC LL	20.0 PSF	REF R487-- 29465
TC DL	10.0 PSF	DATE 06/15/12
BC DL	10.0 PSF	DRW HCUSR487 12167012
BC LL	0.0 PSF	HC-ENG DF/DF
TOT.LD.	40.0 PSF	SEQN- 261777
DUR.FAC.	1.25	
SPACING	24.0"	JREF- 1UMZ487_Z01

THIS DWG PREPARED FROM COMPUTER INPUT (LOADS & DIMENSIONS) SUBMITTED BY TRUSS MFR.

(12-010rev--BRYAN ZECHER Neely Residence -- 2682 NW Noegel Rd. Lake City, FL 3 - HJ9)

Top chord 2x4 SP #1
Bot chord 2x4 SP #1
Webs 2x4 SP #3

110 mph wind, 15.00 ft mean hgt, ASCE 7-05, CLOSED bldg, Located anywhere in roof, CAT II, EXP B, wind TC DL=5.0 psf, wind BC DL=5.0 psf. Iw=1.00 GCpi(+/-)=0.18

Left cantilever is exposed to wind

(H1) = (J) Hanger not calculated (2)2x6 SP M-26 supporting member.

Sub-fascia beam assumptions: 5-0-0 sub-fascia beam on the 2-0-0 cantilever side. 5-0-0 sub-fascia beam on the 2-0-0 cantilever side.

Deflection meets L/240 live and L/180 total load.

This design is based on lumber values in effect prior to June 1, 2012 and shall only be used on projects designed and permitted prior to this date unless specifically approved in writing by the building authority having jurisdiction, the building designer and the project owner.

Wind loads and reactions based on MWFRS with additional C&C member design.

Right end vertical not exposed to wind pressure.

The following members need concentrated loads at the heel: 5-0-0 span/setback member on the 2-0-0 cant side requires 45 lbs and the 5-0-0 span/setback member on the 2-0-0 cant side requires 45 lbs.

Hipjack supports 11-0-0 setback jacks. Jacks up to 7' have no webs. Longer jacks supported to BC. 2-0-0 cant one face, 2-0-0 cant opposite face.

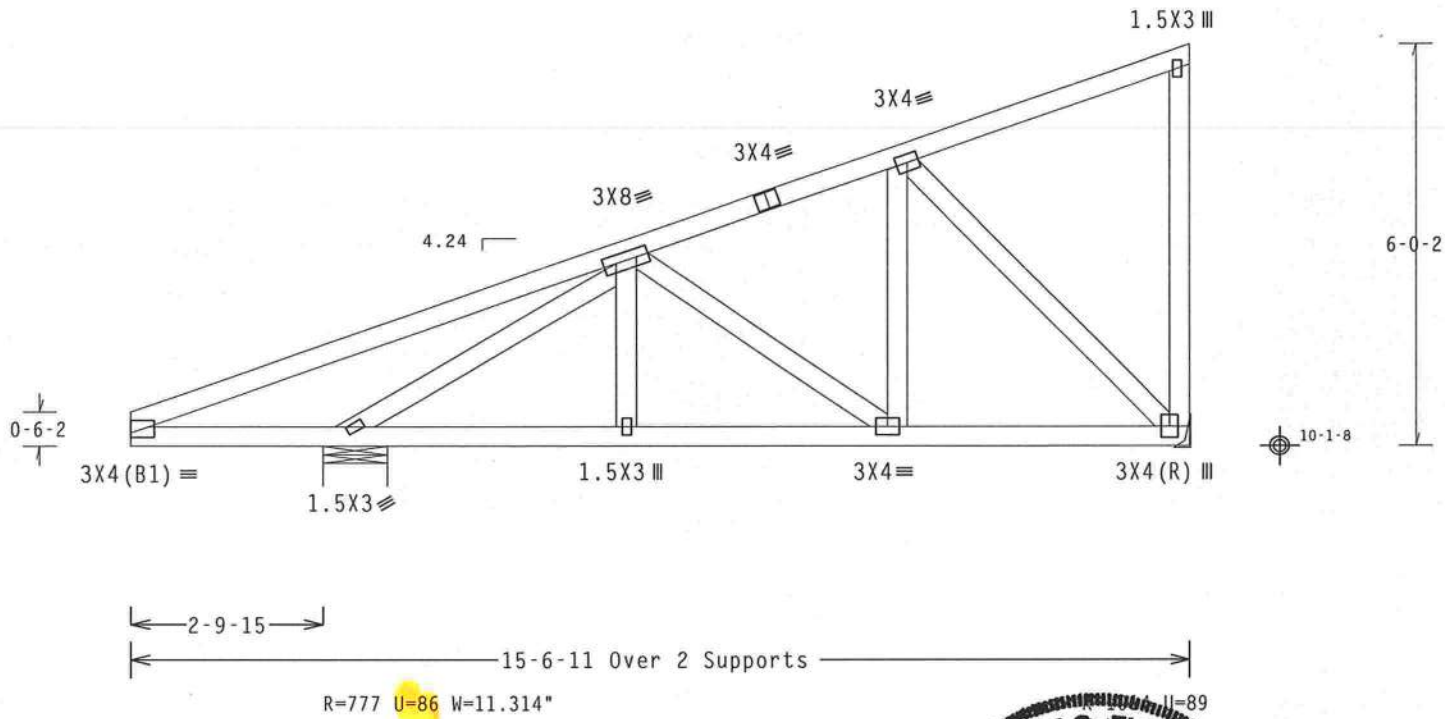

Design Crit: FBC2007Res/TPI-2002(STD)

PLT TYP. Wave FT/RT=10%(0%)/0(0) 10.03.11.0209.20 QTY 2 FL/-/4/-/-/R/- Scale =.375"/Ft.

ALPINE
ITW Building Components Group Inc.
Haines City, FL 33844
FL COA #0 278

WARNING READ AND FOLLOW ALL NOTES ON THIS SHEET!
IMPORTANT FURNISH THIS DESIGN TO ALL CONTRACTORS INCLUDING INSTALLERS.

Trusses require extreme care in fabricating, handling, shipping, installing and bracing. Refer to and follow the latest edition of BCSI (Building Component Safety Information, by TPI and WTCA) for safety practices prior to performing these functions. Installers shall provide temporary bracing per BCSI. Unless noted otherwise, top chord shall have properly attached structural sheathing and bottom chord shall have a properly attached rigid ceiling. Locations shown for permanent lateral restraint of webs shall have bracing installed per BCSI sections B3, B7 or B10, as applicable.

ITW Building Components Group Inc. (ITWBCG) shall not be responsible for any deviation from this design, any failure to build the truss in conformance with ANSI/TPI 1, or for handling, shipping, installing and bracing of trusses. Apply plates to each face of truss and position as shown above and on the Job Details, unless noted otherwise. Refer to drawings 160A-Z for standard plate positions. A seal on this drawing or cover page listing this drawing, indicates acceptance of professional engineering responsibility solely for the design shown. The suitability and use of this design for any structure is the responsibility of the Building Designer per ANSI/TPI 1 Sec.2. For more information see: This job's general notes page; ITW-BCG: www.itwbcg.com; TPI: www.tpinst.org; WTCA: www.sbcindustry.com; ICC: www.iccsafe.org

DOUGLAS FLEMING LICENSE No. 66648 STATE OF FLORIDA PROFESSIONAL ENGINEER

06/18/2012

TC LL	20.0 PSF	REF	R487-- 29466
TC DL	10.0 PSF	DATE	06/18/12
BC DL	10.0 PSF	DRW	HCUSR487 12170112
BC LL	0.0 PSF	HC-ENG	DF/DF
TOT.LD.	40.0 PSF	SEQN-	8247
DUR.FAC.	1.25		
SPACING	24.0"	JREF-	1UMZ487_Z01

Top chord 2x4 SP #1
Bot chord 2x4 SP #1
Webs 2x4 SP #3

Left and right cantilevers are exposed to wind

The following members need concentrated loads at the heel: 9-0-0 span/setback member on the 4-2-8 cant side requires 204 lbs and the 9-0-0 span/setback member on the 4-2-8 cant side requires 204 lbs.

Hipjack supports 11-0-0 setback jacks. Jacks up to 7' have no webs. Longer jacks supported to BC. 4-2-8 cant one face, 4-2-8 cant opposite face.

110 mph wind, 15.00 ft mean hgt, ASCE 7-05, CLOSED bldg, Located anywhere in roof, CAT II, EXP B, wind TC DL=5.0 psf, wind BC DL=5.0 psf. Iw=1.00 GCpi(+/-)=0.18

Wind loads and reactions based on MWFRS with additional C&C member design.

Sub-fascia beam assumptions: 9-0-0 sub-fascia beam on the 4-2-8 cantilever side. 9-0-0 sub-fascia beam on the 4-2-8 cantilever side.

Deflection meets L/240 live and L/180 total load.

Provide (2) 16d common nails(0.162"x3.5"), toe nailed at Top chord.
Provide (2) 16d common nails(0.162"x3.5"), toe nailed at Bot chord.

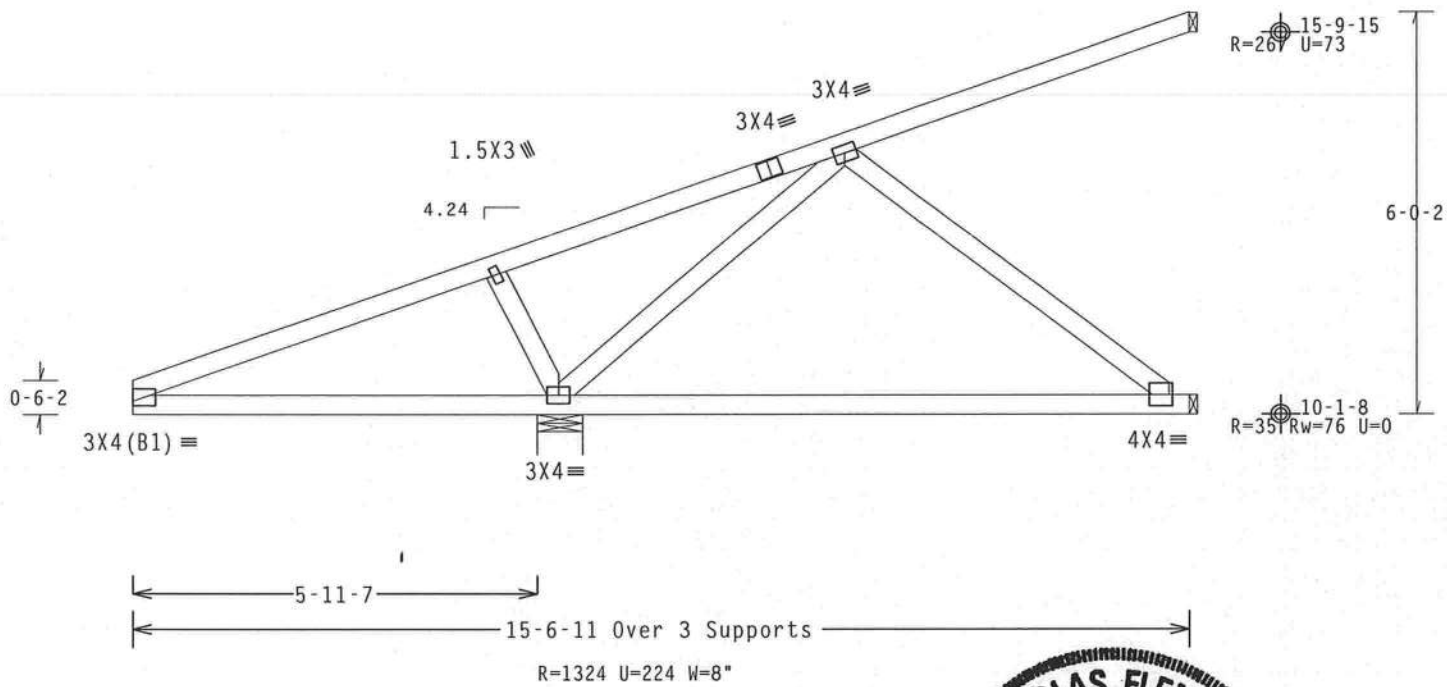

Design Crit: FBC2007Res/TPI-2002(STD)
FT/RT=10%(0%)/0(0)

PLT TYP. Wave

10.01.04 0603.16 QTY: 1

FL/-/4/-/-/R/-

Scale =.375"/Ft.

ALPINE
ITW Building Components Group Inc.
Haines City, FL 33844
FL COA #0 278

WARNING READ AND FOLLOW ALL NOTES ON THIS SHEET!
IMPORTANT FURNISH THIS DESIGN TO ALL CONTRACTORS INCLUDING INSTALLERS.

Trusses require extreme care in fabricating, handling, shipping, installing and bracing. Refer to and follow the latest edition of BCSI (Building Component Safety Information, by TPI and WTCA) for handling practices prior to performing these functions. Installers shall provide temporary bracing per BCSI. Unless noted otherwise, top chord shall have properly attached structural sheathing and bottom chord shall have a properly attached rigid ceiling. Locations shown for permanent lateral restraint of webs shall have bracing installed per BCSI sections B3, B7 or B10, as applicable.

ITW Building Components Group Inc. (ITWBCG) shall not be responsible for any deviation from this design, any failure to build the truss in conformance with ANSI/TPI 1, or for handling, shipping, installation and bracing of trusses. Apply plates to each face of truss and position as shown above and on the Joint Details, unless noted otherwise. Refer to drawings 160A-Z for standard plate positions. A seal on this drawing or cover page listing this drawing, indicates acceptance of professional engineering responsibility solely for the design shown. The suitability and use of this design for any structure is the responsibility of the Building Designer per ANSI/TPI 1 Sec.2. For more information see: This job's general notes page; ITW-BCG: www.itwbcg.com; TPI: www.tpinst.org; WTCA: www.sbcindustry.com; ICC: www.iccsafe.org

DOUGLAS FLEMING LICENSE No. 66648 STATE OF FLORIDA PROFESSIONAL ENGINEER
06/18/2012

TC LL	20.0 PSF	REF R487-- 29467
TC DL	10.0 PSF	DATE 06/15/12
BC DL	10.0 PSF	DRW HCUSR487 12167036
BC LL	0.0 PSF	HC-ENG DF/DF
TOT.LD.	40.0 PSF	SEQN- 261765
DUR.FAC.	1.25	
SPACING	24.0"	JREF- 1UMZ487_Z01

THIS DWG PREPARED FROM COMPUTER INPUT (LOADS & DIMENSIONS) SUBMITTED BY TRUSS MFR.

Top chord 2x4 SP #1
Bot chord 2x4 SP #1
Webs 2x4 SP #3

Left and right cantilevers are exposed to wind

Bottom chord checked for 10.00 psf non-concurrent live load.

MWFRS loads based on trusses located at least 8.37 ft. from roof edge.

110 mph wind, 16.74 ft mean hgt, ASCE 7-05, CLOSED bldg, not located within 9.00 ft from roof edge, CAT II, EXP B, wind TC DL=5.0 psf, wind BC DL=5.0 psf. Iw=1.00 GCpi(+/-)=0.18

Wind loads and reactions based on MWFRS with additional C&C member design.

Deflection meets L/240 live and L/180 total load.

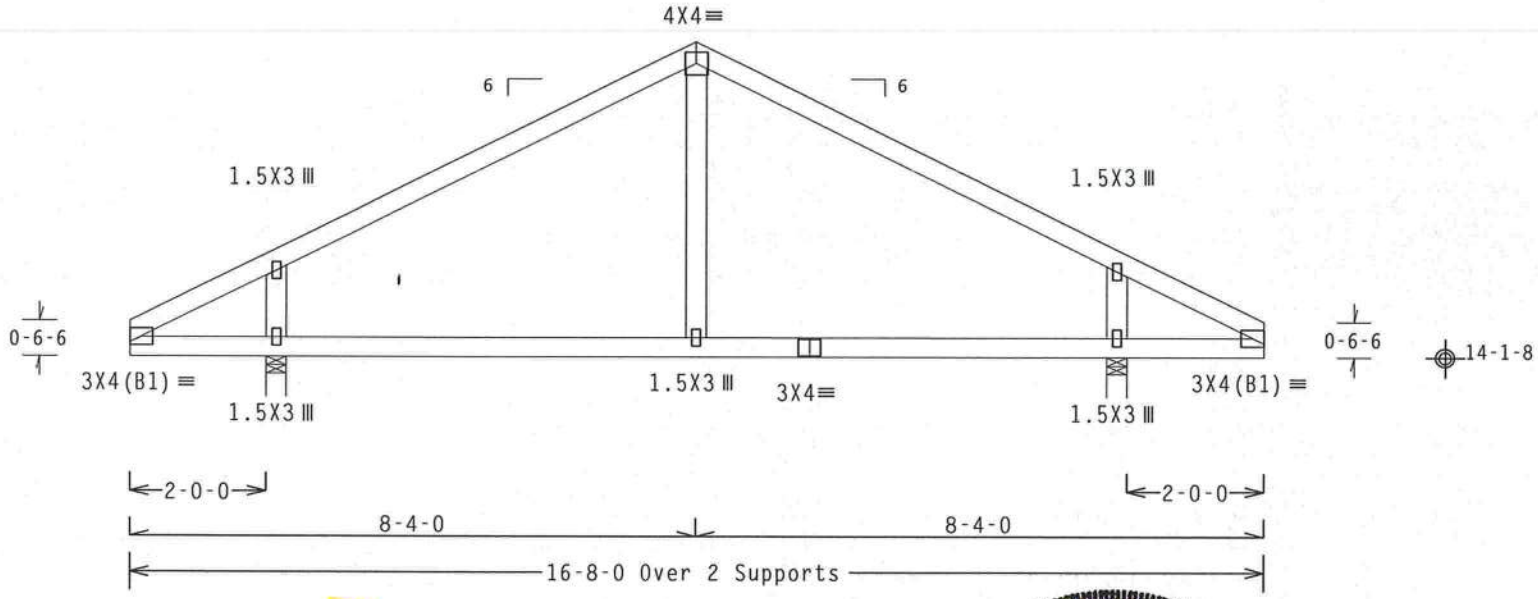

R=686 U=52 W=3.5"
RL=86/-86

Design Crit: FBC2007Res/TPI-2002(STD)
FT/RT=10%(0%)/0(0)

PLT TYP. Wave

10.03.04 0601.16 QTY: 1

FL/-/4/-/-/R/-

Scale =.375"/Ft.

ALPINE
ITW Building Components Group Inc.
Haines City, FL 33844
FL COA #0 278

WARNING READ AND FOLLOW ALL NOTES ON THIS SHEET!
IMPORTANT FURNISH THIS DESIGN TO ALL CONTRACTORS INCLUDING INSTALLERS.

Trusses require extreme care in fabricating, handling, shipping, installing and bracing. Refer to and follow the latest edition of BCSI (Building Component Safety Information, by TPI and WTCA) for general practices prior to performing these functions. Installers shall provide temporary bracing per BCSI. Unless noted otherwise, top chord shall have properly attached structural sheathing and bottom chord shall have a properly attached rigid ceiling. Locations shown for permanent lateral restraint of webs shall have bracing installed per BCSI sections B3, B7 or B10, as applicable.

ITW Building Components Group Inc. (ITWBCG) shall not be responsible for any deviation from this design, any failure to build the truss in conformance with ANSI/TPI 1, or for handling, shipping, installation and bracing of trusses. Apply plates to each face of truss and position as shown above and on the Joint Details, unless noted otherwise. Refer to drawings 160A-Z for standard plate positions. A seal on this drawing or cover page listing this drawing, indicates acceptance of professional engineering responsibility solely for the design shown. The suitability and use of this design for any structure is the responsibility of the Building Designer per ANSI/TPI 1 Sec.2. For more information see: This job's general notes page; ITW-BCG: www.itwbcg.com; TPI: www.tpinst.org; WTCA: www.sbcindustry.com; ICC: www.iccsafe.org

DOUGLAS FLEMING LICENSE No. 66648 STATE OF FLORIDA PROFESSIONAL ENGINEER
06/18/2012

TC LL	20.0 PSF	REF R487-- 29468
TC DL	10.0 PSF	DATE 06/15/12
BC DL	10.0 PSF	DRW HCUSR487 12167006
BC LL	0.0 PSF	HC-ENG DF/DF
TOT.LD.	40.0 PSF	SEQN- 263044
DUR.FAC.	1.25	
SPACING	24.0"	JREF- 1UMZ487_Z01

THIS DWG PREPARED FROM COMPUTER INPUT (LOADS & DIMENSIONS) SUBMITTED BY TRUSS MFR.

Top chord 2x4 SP #1
Bot chord 2x4 SP #1
Webs 2x4 SP #3

Calculated horizontal deflection is 0.16" due to live load and 0.17" due to dead load.

Bottom chord checked for 10.00 psf non-concurrent live load.

MWFRS loads based on trusses located at least 8.62 ft. from roof edge.

110 mph wind, 17.24 ft mean hgt, ASCE 7-05, CLOSED bldg, not located within 9.00 ft from roof edge, CAT II, EXP B, wind TC DL=5.0 psf, wind BC DL=5.0 psf. Iw=1.00 GCpi(+/-)=0.18

Wind loads and reactions based on MWFRS with additional C&C member design.

Deflection meets L/240 live and L/180 total load.

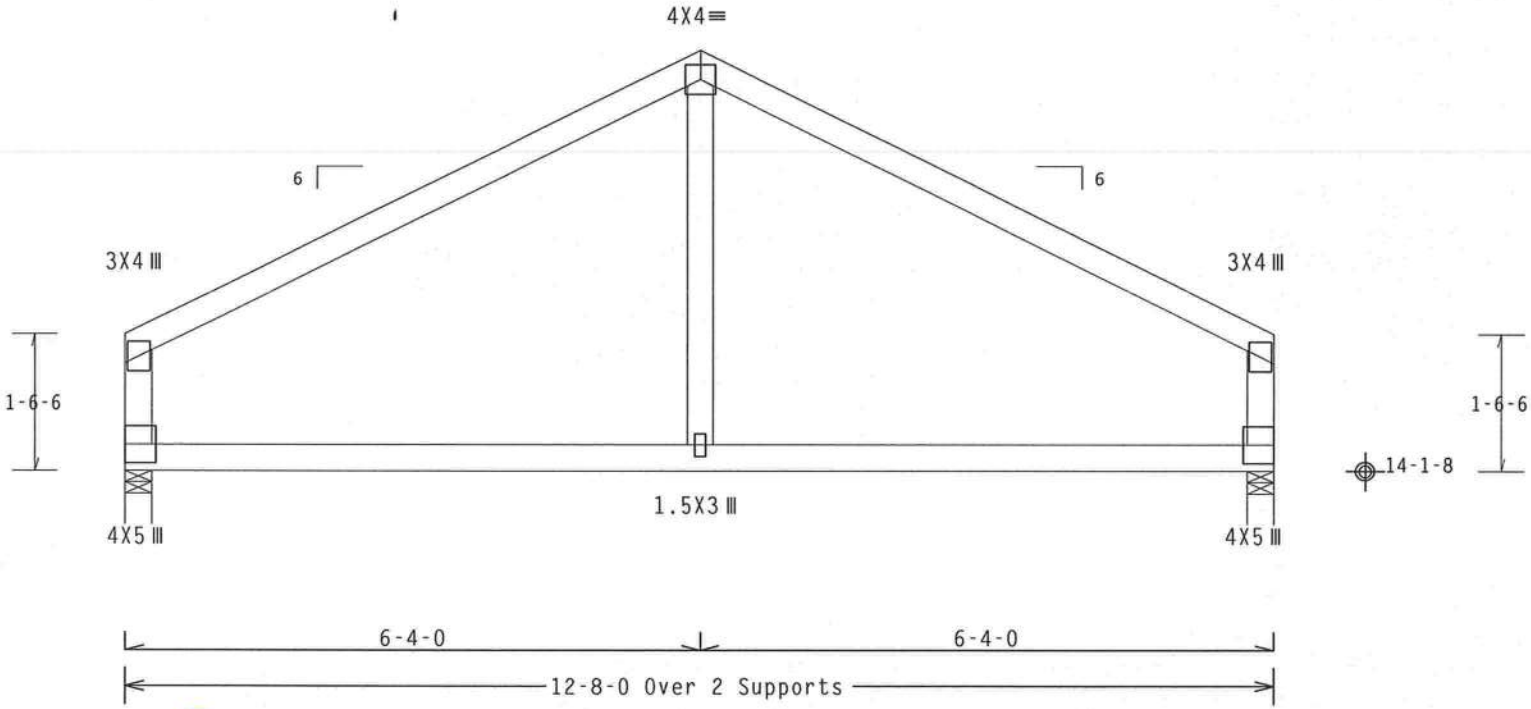

R=522 U=48 W=3.5"
RL=65/-65

R=522 U=48 W=3.5"

Design Crit: FBC2007Res/TPI-2002(STD)

PLT TYP. Wave

FT/RT=10%(0%)/0(0)

10.03.04.0601.16 QTY 2

FL/-/4/-/-/R/-

Scale =.5"/Ft.

ALPINE
ITW Building Components Group Inc.
Haines City, FL 33844
FL COA #0 278

WARNING READ AND FOLLOW ALL NOTES ON THIS SHEET!
IMPORTANT FURNISH THIS DESIGN TO ALL CONTRACTORS INCLUDING INSTALLERS.

Trusses require extreme care in fabricating, handling, shipping, installing and bracing. Refer to and follow the latest edition of BCSI (Building Component Safety Information, by TPI and WTCA) for safety practices prior to performing these functions. Installers shall provide temporary bracing per BCSI. Unless noted otherwise, top chord shall have properly attached structural sheathing and bottom chord shall have a properly attached rigid ceiling. Locations shown for permanent lateral restraint of webs shall have bracing installed per BCSI sections B3, B7 or B10, as applicable.

ITW Building Components Group Inc. (ITWBCG) shall not be responsible for any deviation from this design, any failure to build the truss in conformance with ANSI/TPI 1, or for handling, shipping, installing and bracing of trusses. Apply plates to each face of truss and position as shown above and on the Joint Details, unless noted otherwise. Refer to drawings 160A-Z for standard plate positions. A seal on this drawing or cover page listing this drawing, indicates acceptance of professional engineering responsibility solely for the design shown. The suitability and use of this design for any structure is the responsibility of the Building Designer per ANSI/TPI 1 Sec.2. For more information see: This job's general notes page; ITW-BCG: www.itwbcg.com; TPI: www.tpinst.org; WTCA: www.sbcindustry.com; ICC: www.iccsafe.org

DOUGLAS FLEMING LICENSE No. 66648 STATE OF FLORIDA PROFESSIONAL ENGINEER

06/18/2012

TC LL	20.0 PSF	REF R487-- 29469
TC DL	10.0 PSF	DATE 06/15/12
BC DL	10.0 PSF	DRW HCUSR487 12167005
BC LL	0.0 PSF	HC-ENG DF/DF
TOT.LD.	40.0 PSF	SEQN- 263049
DUR.FAC.	1.25	
SPACING	24.0"	JREF- 1UMZ487_Z01

THIS DWG PREPARED FROM COMPUTER INPUT (LOADS & DIMENSIONS) SUBMITTED BY TRUSS MFR.

Top chord 2x6 SP M-26
Bot chord 2x6 SP M-26
Webs 2x4 SP #3

110 mph wind, 17.72 ft mean hgt, ASCE 7-05, CLOSED bldg, Located anywhere in roof, CAT II, EXP B, wind TC DL=5.0 psf, wind BC DL=5.0 psf. Iw=1.00 GCpi(+/-)=0.18

Wind loads and reactions based on MWFRS with additional C&C member design.

(J) hanger connection not found in inventory file for this condition. Provide connection.

(a) Continuous lateral bracing equally spaced on member.

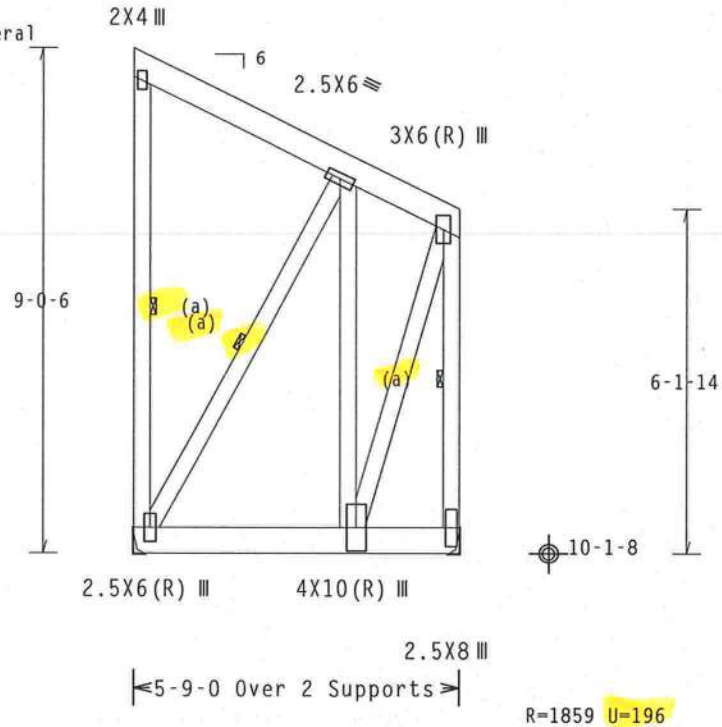

R=1859 U=196
H=SimpsonH1

R=1785 U=173 H=Simpson HUS26
Supported Member Face: (4) 0.162"x3.5" nails
Supporting Member Face: (14) 0.162"x3.5" nails
Supporting Member : (1) 2x6 SP #2

Special loads
------(Lumber Dur.Fac.=1.25 / Plate Dur.Fac.=1.25)
TC- From 31 plf at 0.00 to 31 plf at 5.75
BC- From 10 plf at 0.00 to 10 plf at 5.75
BC- 1703.58 lb Conc. Load at 1.94, 3.94

End verticals not exposed to wind pressure.

H = recommended connection based on manufacturer tested capacities and calculations. Conditions may exist that require different connections than indicated. Refer to manufacturer publication for additional information.

Bottom chord checked for 10.00 psf non-concurrent live load.

Deflection meets L/240 live and L/180 total load.

Design Crit: FBC2007Res/TPI-2002(STD)
FT/RT=10%(0%)/0(0)

PLT TYP. Wave

10.03.04 0603.16 QTY:

FL/-/4/-/-/R/-

Scale =.3125"/Ft.

DOUGLAS FLEMING LICENSE No. 66648 STATE OF FLORIDA PROFESSIONAL ENGINEER
06/18/2012

ALPINE
ITW Building Components Group Inc.
Haines City, FL 33844
FL COA #0 278

WARNING READ AND FOLLOW ALL NOTES ON THIS SHEET!
IMPORTANT FURNISH THIS DESIGN TO ALL CONTRACTORS INCLUDING INSTALLERS.

Trusses require extreme care in fabricating, handling, shipping, installing and bracing. Refer to and follow the latest edition of BCSI (Building Component Safety Information, by TPI and WTCA) for general practices prior to performing these functions. Installers shall provide temporary bracing per BCSI. Unless noted otherwise, top chord shall have properly attached structural sheathing and bottom chord shall have a properly attached rigid ceiling. Locations shown for permanent lateral restraint of webs shall have bracing installed per BCSI sections B3, B7 or B10, as applicable.

ITW Building Components Group Inc. (ITWBCG) shall not be responsible for any deviation from this design, any failure to build the truss in conformance with ANSI/TPI 1, or for handling, shipping, installation and bracing of trusses. Apply plates to each face of truss and position as shown above and on the Joint Details, unless noted otherwise. Refer to drawings 160A-Z for standard plate positions. A seal on this drawing or cover page listing this drawing, indicates acceptance of professional engineering responsibility solely for the design shown. The suitability and use of this design for any structure is the responsibility of the Building Designer per ANSI/TPI 1 Sec.2. For more information see: This job's general notes page: ITW-BCG: www.itwbcg.com; TPI: www.tpinst.org; WTCA: www.sbcindustry.com; ICC: www.iccsafe.org

TC LL	20.0 PSF	REF R487-- 29470
TC DL	10.0 PSF	DATE 06/15/12
BC DL	10.0 PSF	DRW HCUSR487 12167023
BC LL	0.0 PSF	HC-ENG DF/DF
TOT.LD.	40.0 PSF	SEQN- 264630
DUR.FAC.	1.25	
SPACING	24.0"	JREF- 1UMZ487_Z01

THIS DWG PREPARED FROM COMPUTER INPUT (LOADS & DIMENSIONS) SUBMITTED BY TRUSS MFR.

(12-010rev--BRYAN ZECHER Neely Residence -- 2682 NW Noegel Rd. Lake City, FL 3 - M)

Top chord 2x4 SP #1
Bot chord 2x4 SP #1
Webs 2x4 SP #3

Left cantilever is exposed to wind

Bottom chord checked for 10.00 psf non-concurrent live load.

Deflection meets L/240 live and L/180 total load.

110 mph wind, 15.00 ft mean hgt, ASCE 7-05, CLOSED bldg, not located within 9.00 ft from roof edge, CAT II, EXP B, wind TC DL=5.0 psf, wind BC DL=5.0 psf. Iw=1.00 GCpi(+/-)=0.18

Wind loads and reactions based on MWFRS with additional C&C member design.

Right end vertical not exposed to wind pressure.

MWFRS loads based on trusses located at least 30.00 ft. from roof edge.

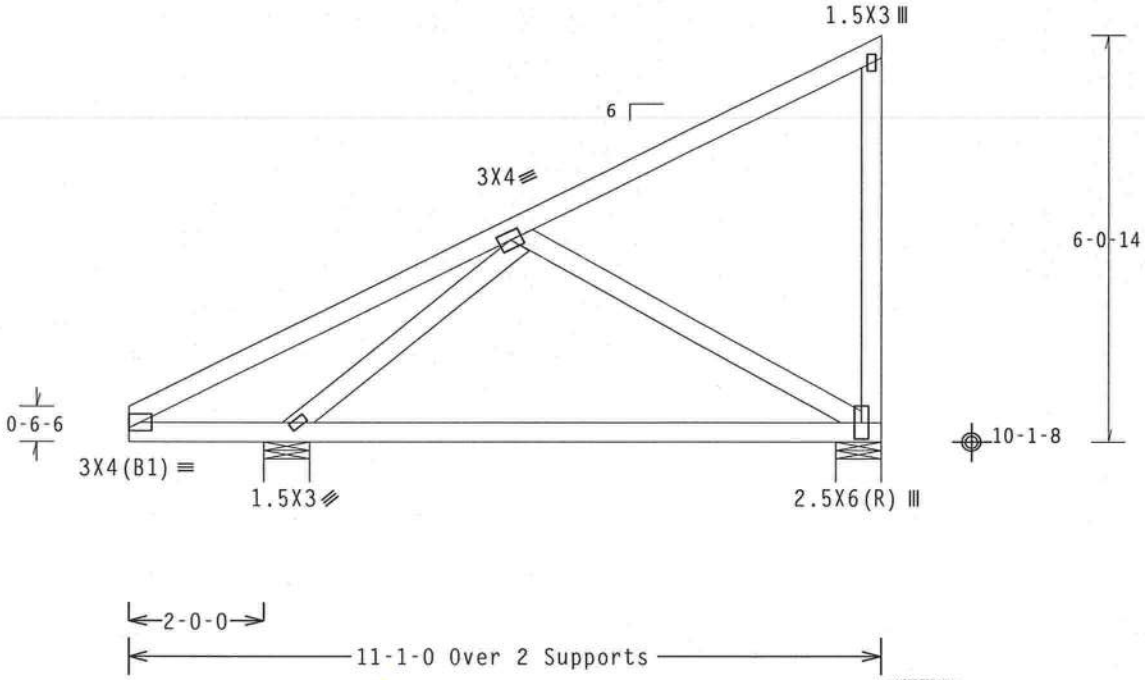

Design Crit: FBC2007Res/TPI-2002(STD)

PLT TYP. Wave FT/RT=10%(0%)/0(0) 10.03.04.0601.16 QTY:4 FL/-/4/-/-/R/- Scale =.375"/Ft.

ALPINE
ITW Building Components Group Inc.
Haines City, FL 33844
FL COA #0 278

WARNING READ AND FOLLOW ALL NOTES ON THIS SHEET!
IMPORTANT FURNISH THIS DESIGN TO ALL CONTRACTORS INCLUDING INSTALLERS.

Trusses require extreme care in fabricating, handling, shipping, installing and bracing. Refer to and follow the latest edition of BCSI (Building Component Safety Information, by TPI and WTCA) for safety practices prior to performing these functions. Installers shall provide temporary bracing per BCSI. Unless noted otherwise, top chord shall have properly attached structural sheathing and bottom chord shall have a properly attached rigid ceiling. Locations shown for permanent lateral restraint of webs shall have bracing installed per BCSI sections B3, B7 or B10, as applicable.

ITW Building Components Group Inc. (ITWBCG) shall not be responsible for any deviation from this design, any failure to build the truss in conformance with ANSI/TPI 1, or for handling, shipping, installation or bracing of trusses. Apply plates to each face of truss and position as shown above and on the Joint Details, unless noted otherwise. Refer to drawings 160A-Z for standard plate positions. A seal on this drawing or cover page listing this drawing, indicates acceptance of professional engineering responsibility solely for the design shown. The suitability and use of this design for any structure is the responsibility of the Building Designer per ANSI/TPI 1 Sec.2. For more information see: This job's general notes page; ITW-BCG: www.itwbcg.com; TPI: www.tpinst.org; WTCA: www.sbcindustry.com; ICC: www.iccsafe.org

DOUGLAS FLEMING LICENSE No. 66648 STATE OF FLORIDA PROFESSIONAL ENGINEER

06/18/2012

TC LL	20.0 PSF	REF	R487-- 29471
TC DL	10.0 PSF	DATE	06/15/12
BC DL	10.0 PSF	DRW	HCUSR487 12167031
BC LL	0.0 PSF	HC-ENG	DF/DF
TOT.LD.	40.0 PSF	SEQN-	262932
DUR.FAC.	1.25		
SPACING	24.0"	JREF-	1UMZ487_Z01

THIS DWG PREPARED FROM COMPUTER INPUT (LOADS & DIMENSIONS) SUBMITTED BY TRUSS MFR.

(12-010rev--BRYAN ZECHER Neely Residence -- 2682 NW Noegel Rd. Lake City, FL 3 - MS)

Top chord 2x4 SP #1
Bot chord 2x4 SP #1
Webs 2x4 SP #3

Bottom chord checked for 10.00 psf non-concurrent live load.

Deflection meets L/240 live and L/180 total load.

MWFRS loads based on trusses located at least 30.00 ft. from roof edge.

110 mph wind, 15.00 ft mean hgt, ASCE 7-05, CLOSED bldg, not located within 9.00 ft from roof edge, CAT II, EXP B, wind TC DL=5.0 psf, wind BC DL=5.0 psf. Iw=1.00 GCpi(+/-)=0.18

Wind loads and reactions based on MWFRS with additional C&C member design.

Right end vertical not exposed to wind pressure.

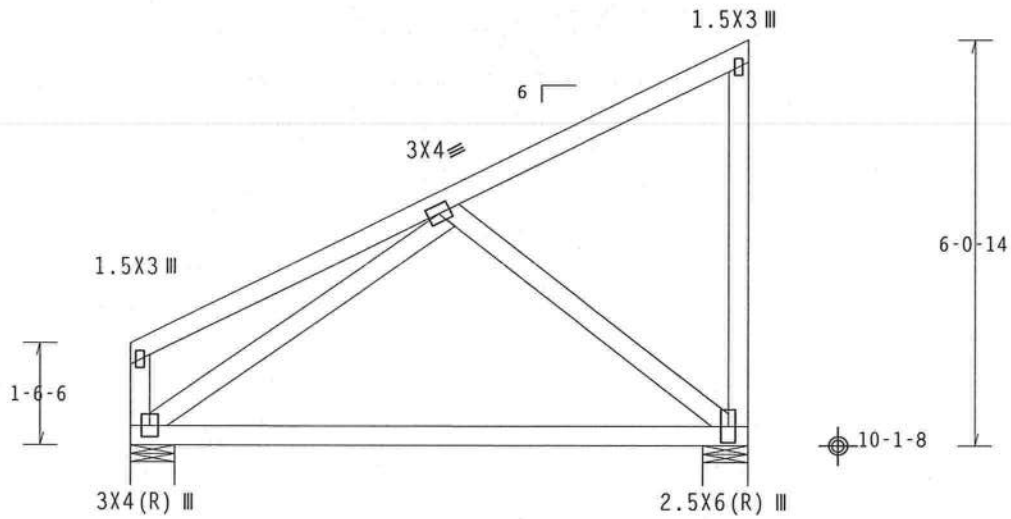

R=374 U=0 W=8"
RL=70/-23

R=374 U=26 W=8"

Design Crit: FBC2007Res/TPI-2002(STD)
FT/RT=10%(0%)/0(0)

PLT TYP. Wave

10.01.04 0601.16 QTY: FL/-/4/-/-/R/- Scale =.375"/Ft.

ALPINE
ITW Building Components Group Inc.
Haines City, FL 33844
FL COA #0 278

WARNING READ AND FOLLOW ALL NOTES ON THIS SHEET!
IMPORTANT FURNISH THIS DESIGN TO ALL CONTRACTORS INCLUDING INSTALLERS.

Trusses require extreme care in fabricating, handling, shipping, installing and bracing. Refer to and follow the latest edition of BCSI (Building Component Safety Information, by TPI and WTCA) for [illegible] practices prior to performing these functions. Installers shall provide temporary bracing per BCSI. Unless noted otherwise, top chord shall have properly attached structural sheathing and bottom chord shall have a properly attached rigid ceiling. Locations shown for permanent lateral restraint of webs shall have bracing installed per BCSI sections B3, B7 or B10, as applicable.

ITW Building Components Group Inc. (ITWBCG) shall not be responsible for any deviation from this design, any failure to build the truss in conformance with ANSI/TPI 1, or for handling, shipping, installation, bracing of trusses. Apply plates to each face of truss and position as shown above and on the Joint Details, unless noted otherwise. Refer to drawings 160A-Z for standard plate positions. A seal on this drawing or cover page listing this drawing, indicates acceptance of professional engineering responsibility solely for the design shown. The suitability and use of this design for any structure is the responsibility of the Building Designer per ANSI/TPI 1 Sec.2. For more information see: This job's general notes page; ITW-BCG: www.itwbcg.com; TPI: www.tpinst.org; WTCA: www.sbcindustry.com; ICC: www.iccsafe.org

DOUGLAS FLEMING LICENSE No. 66648 STATE OF FLORIDA PROFESSIONAL ENGINEER

06/18/2012

TC LL	20.0 PSF	REF	R487-- 29472
TC DL	10.0 PSF	DATE	06/15/12
BC DL	10.0 PSF	DRW	HCUSR487 12167038
BC LL	0.0 PSF	HC-ENG	DF/DF *
TOT.LD.	40.0 PSF	SEQN-	262950
DUR.FAC.	1.25		
SPACING	24.0"	JREF-	1UMZ487_Z01

CLB WEB BRACE SUBSTITUTION

THIS DETAIL IS TO BE USED WHEN CONTINUOUS LATERAL BRACING (CLB) IS SPECIFIED ON A TRUSS DESIGN BUT AN ALTERNATIVE WEB BRACING METHOD IS DESIRED.

NOTES:

THIS DETAIL IS ONLY APPLICABLE FOR CHANGING THE SPECIFIED CLB SHOWN ON SINGLE PLY SEALED DESIGNS TO T-BRACING OR SCAB BRACING.

ALTERNATIVE BRACING SPECIFIED IN CHART BELOW MAY BE CONSERVATIVE. FOR MINIMUM ALTERNATIVE BRACING, RE-RUN DESIGN WITH APPROPRIATE BRACING.

WEB MEMBER SIZE	SPECIFIED CLB BRACING	ALTERNATIVE BRACING T OR L-BRACE	ALTERNATIVE BRACING SCAB BRACE
2X3 OR 2X4	1 ROW	2X4	1-2X4
2X3 OR 2X4	2 ROWS	2X6	2-2X4
2X6	1 ROW	2X4	1-2X6
2X6	2 ROWS	2X6	2-2X4(*)
2X8	1 ROW	2X6	1-2X8
2X8	2 ROWS	2X6	2-2X6(*)

T-BRACE, L-BRACE AND SCAB BRACE TO BE SAME SPECIES AND GRADE OR BETTER THAN WEB MEMBER UNLESS SPECIFIED OTHERWISE ON ENGINEER'S SEALED DESIGN.

(*) CENTER SCAB ON WIDE FACE OF WEB. APPLY (1) SCAB TO EACH FACE OF WEB.

T-BRACING OR L-BRACING:

APPLY TO EITHER SIDE OF WEB NARROW FACE.
ATTACH WITH 10d BOX OR GUN
(0.128"x 3.",MIN) NAILS.
AT 6" O.C.
BRACE IS A
MINIMUM 80% OF WEB
MEMBER LENGTH

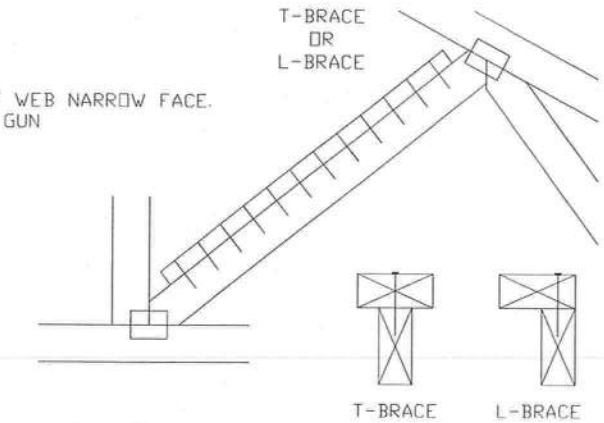

SCAB BRACING:

APPLY SCAB(S) TO WIDE FACE OF WEB.
NO MORE THAN (1) SCAB PER FACE.
ATTACH WITH 10d BOX OR GUN
(0.128"x 3.",MIN) NAILS.
AT 6" O.C.
BRACE IS A MINIMUM
80% OF WEB MEMBER LENGTH

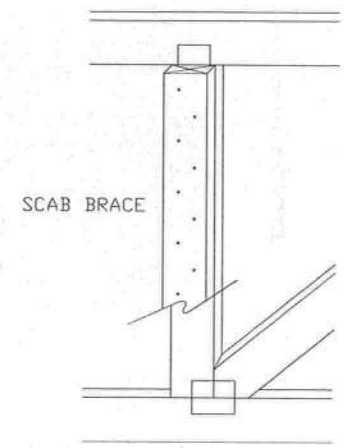

TW
Building Components Group Inc.
Earth City, MO 63045

WARNING READ AND FOLLOW ALL NOTES ON THIS SHEET!
Trusses require extreme care in fabricating, handling, shipping, installing and bracing. Refer to and follow BCSI (Building Component Safety Information, by TPI and WTCA) for safety practices prior to performing these functions. Installers shall provide temporary bracing per BCSI. Unless noted otherwise, top chord shall have properly attached structural panels and bottom chord shall have a properly attached rigid ceiling. Locations shown for permanent lateral restraint of webs shall have bracing installed per BCSI sections B3 & B7. See this job's general notes page for more information.

IMPORTANT FURNISH COPY OF THIS DESIGN TO INSTALLATION CONTRACTOR.
ITW Building Components Group Inc. (ITWBCG) shall not be responsible for any deviation from this design, any failure to build the truss in conformance with TPI, or fabricating, handling, shipping, installing & bracing of trusses. ITWBCG connector plates are made of 20/18/16GA (W,H/S/K) ASTM grade 37/40/60 (K/W/H,S) galv. steel. Apply plates to each face of truss, positioned as shown and on Joint Details.
A seal on this drawing or cover page indicates acceptance and professional engineering responsibility solely for the truss component design shown. The suitability and use of this component for any building is the responsibility of the Building Designer per ANST/TPI 1 Sec. 2.
ITW-BCG: www.itwbcg.com; TPI: www.tpinst.com; WTCA: www.sbcindustry.com; ICC: www.iccsafe.org

DOUGLAS FLEMING
LICENSE
No. 66648
STATE OF
FLORIDA
PROFESSIONAL ENGINEER

06/18/2012

TC LL	PSF	REF CLB SUBST.
TC DL	PSF	DATE 1/1/09
BC DL	PSF	DRWG BRCLBSUB0109
BC LL	PSF	
TOT. LD.	PSF	
DUR. FAC.		
SPACING		