ITW Building Components Group, Inc.

1950 Marley Drive Haines City, FL 33844
Florida Engineering Certificate of Authorization Number: 0 278
Florida Certificate of Product Approval # FL1999
 Document ID:1UL8487-Z0113152956

WALTER P. FINN LICENSE No. 22839 STATE OF FLORIDA PROFESSIONAL ENGINEER
04/13/2012

Truss Fabricator: Anderson Truss Company
Job Identification: 12-077--LAKE CITY INDUSTRIES Varney Garage Add. -- 655 NW Iona Loop, Lake City, (655 NW Iona
Truss Count: 29
Model Code: Florida Building Code
Truss Criteria: FBC2010Res/TPI-2007(STD)
Engineering Software: Alpine Software,Version 10.03.
Structural Engineer of Record: The identity of the structural EOR did not exist as of
Address: the seal date per section 61G15-31.003(5a) of the FAC
Minimum Design Loads: Roof - 40.0 PSF @ 1.25 Duration
Floor - N/A
Wind - 120 MPH ASCE 7-10 -Closed

Notes:

1. Determination as to the suitability of these truss components for the structure is the responsibility of the building designer/engineer of record, as defined in ANSI/TPI 1
2. The drawing date shown on this index sheet must match the date shown on the individual truss component drawing.
3. As shown on attached drawings; the drawing number is preceded by: HCUSR487

Walter P. Finn
-Truss Design Engineer-

1950 Marley Drive
Haines City, FL 33844

Details: 12015EC1-GBLLETIN-GABRST10-BRCLBSUB-VAL16010-

#	Ref Description	Drawing#	Date
1	21847--AGE 30' Gable	12104002	04/13/12
2	21848--AV1 30' Common	12104029	04/13/12
3	21849--AV1 30' Common	12104003	04/13/12
4	21850--AV 30' Common	12104004	04/13/12
5	21851--AV1 30' Common	12104005	04/13/12
6	21852--AV1 30' Common	12104006	04/13/12
7	21853--AVGE 30' Gable	12104007	04/13/12
8	21854-H13B 30' Stepdow	12104008	04/13/12
9	21855-H11B 30' Stepdow	12104009	04/13/12
10	21856-H9B 30' Stepdown	12104010	04/13/12
11	21857-BG 30' Stepdown	12104030	04/13/12
12	21858-H7B 30' Stepdown	12104026	04/13/12
13	21859--CV 18' Common	12104027	04/13/12
14	21860--CGE 18' Gable	12104028	04/13/12
15	21861--D 8' Common	12104011	04/13/12
16	21862-DG 8' Common Gir	12104012	04/13/12
17	21863--EJ7 7' End Jack	12104013	04/13/12
18	21864--CJ1 1' Jack	12104014	04/13/12
19	21865--CJ3 3' Jack	12104015	04/13/12
20	21866--CJ5 5' Jack	12104016	04/13/12
21	21867-HJ7 9'10"13 Hip	12104017	04/13/12
22	21868-V1 27'5"12 Valle	12104018	04/13/12
23	21869-V2 23'8"12 Valle	12104019	04/13/12
24	21870-V3 19'8"12 Valle	12104020	04/13/12
25	21871-V4 15'8"12 Valle	12104021	04/13/12
26	21872-V5 11'8"12 Valle	12104022	04/13/12
27	21873-V6 7'8"12 Valley	12104023	04/13/12
28	21874-V7 3'8"12 Valley	12104024	04/13/12
29	21875-DV 3'5"12 Valley	12104025	04/13/12

COLUMBIA COUNTY BUILDING DEPARTMENT
Received for FILE COPY
Code Compliance
PLANS EXAMINER

(12-077--LAKE CITY INDUSTRIES Varney Garage Add. -- 655 NW Lona Loop Lake City, - AGE 30' Gable)

Top chord 2x4 SP M-30
Bot chord 2x4 SP M-30
Webs 2x4 SP #3

Roof overhang supports 2.00 psf soffit load.

See DWGS A12015ENC100212, GBLLETIN0212, & GABRST100212 for more requirements.

Deflection meets L/240 live and L/180 total load. Creep increase factor for dead load is 1.50.

NOTE: THE PROJECT ENGINEER SHALL PROVIDE FOR ENDWALL STABILITY PER SECTION 2304.3.4.2 OF THE 2007 FLORIDA BUILDING CODE. THE TOP OF THE WALL BELOW THIS TRUSS SHALL BE LATERALLY BRACED AS SPECIFIED BY THE PROJECT ENGINEER. THIS TRUSS WILL NOT PROVIDE LATERAL SUPPORT OF THE ENDWALL.

120 mph wind, 15.00 ft mean hgt, ASCE 7-10, CLOSED bldg, Located anywhere in roof, RISK CAT II, EXP B, wind TC DL=5.0 psf, wind BC DL=5.0 psf. GCpi(+/-)=0.18

Wind loads and reactions based on MWFRS with additional C&C member design.

Bottom chord checked for 10.00 psf non-concurrent live load.

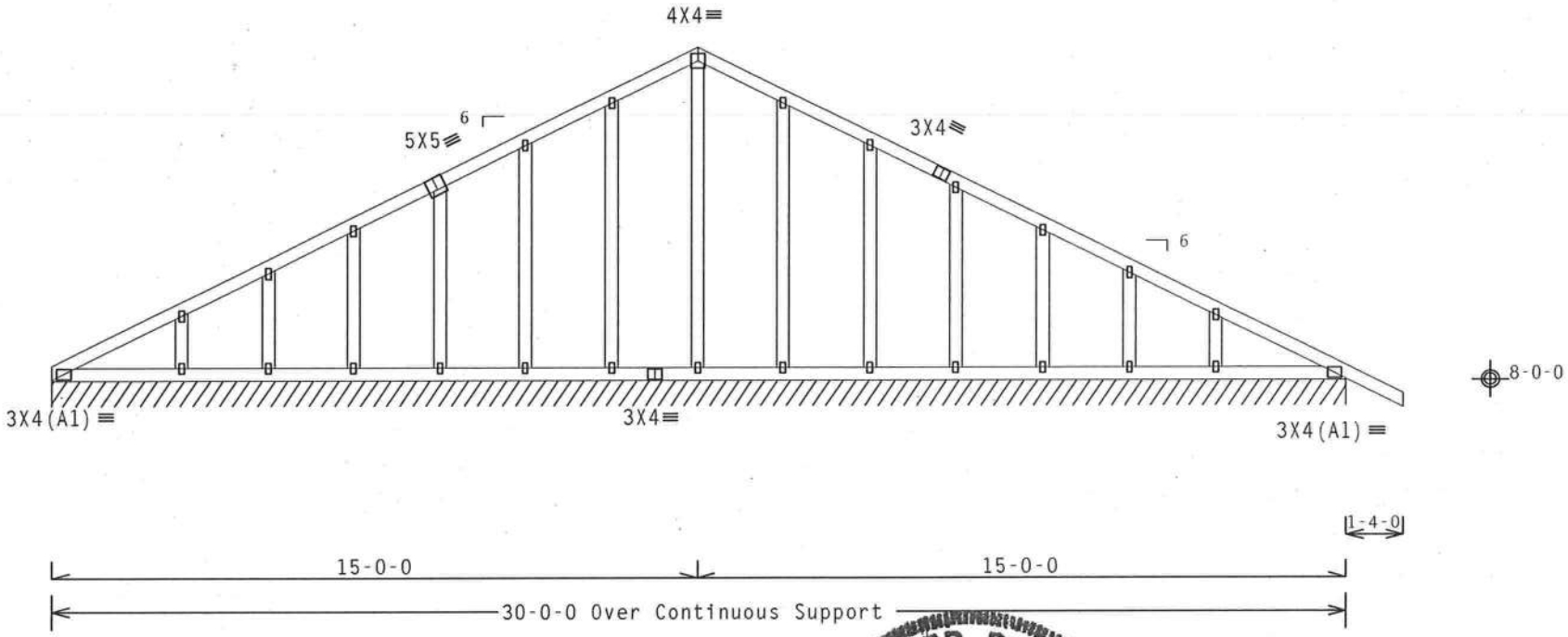

R=85 PLF U=0 PLF W=30-0-0
RL=4/-4 PLF

Note: All Plates Are 1.5X3 Except As Shown.

Design Crit: FBC2010Res/TPI-2007(STD)

PLT TYP. Wave FT/RT=10%(0%)/0(0) 10/03/2012 QTY: FL/-/4/-/-/R/- Scale =.25"/Ft.

ALPINE
ITW Building Components Group Inc.
Haines City, FL 33844
FL COA #0 278

WARNING READ AND FOLLOW ALL NOTES ON THIS SHEET!
IMPORTANT FURNISH THIS DESIGN TO ALL CONTRACTORS INCLUDING INSTALLERS.

Trusses require extreme care in fabricating, handling, shipping, installing and bracing. Refer to and follow the latest edition of BCSI (Building Component Safety Information, by TPI and WTCA) for safety practices prior to performing these functions. Installers shall provide temporary bracing per BCSI. Unless noted otherwise, top chord shall have properly attached structural sheathing and bottom chord shall have a properly attached rigid ceiling. Locations shown for permanent lateral restraint of webs shall have bracing installed per BCSI sections B3, B7 or B10, as applicable.

ITW Building Components Group Inc. (ITWBCG) shall not be responsible for any deviation from this drawing, any failure to build the truss in conformance with ANSI/TPI 1, or for handling, shipping, installing and bracing of trusses. Apply plates to each face of truss and position as shown above and on the Joint Details, unless noted otherwise. Refer to drawings 160A-2 for standard plate positions. A seal on this drawing or cover page listing this drawing, indicates acceptance of professional engineering responsibility solely for the design shown. The suitability and use of this design for any structure is the responsibility of the Building Designer per ANSI/TPI 1 Sec.2. For more information see: This job's general notes page; ITW-BCG: www.itwbcg.com; TPI: www.tpinst.org; WTCA: www.sbcindustry.com; ICC: www.iccsafe.org

WALTER P. FINN LICENSE No. 42839 STATE OF FLORIDA PROFESSIONAL ENGINEER

04/13/2012

TC LL	20.0 PSF	REF R487-- 21847
TC DL	10.0 PSF	DATE 04/13/12
BC DL	10.0 PSF	DRW HCUSR487 12104002
BC LL	0.0 PSF	HC-ENG SSB/WPF
TOT.LD.	40.0 PSF	SEQN- 283274
DUR.FAC.	1.25	
SPACING	24.0"	JREF- 1UL8487_Z01

(12-077--LAKE CITY INDUSTRIES Varney Garage Add. -- 655 NW Lona Loop Lake City, - AV1 30' Common)

Top chord 2x4 SP M-30
Bot chord 2x4 SP M-30
Webs 2x4 SP #3

Roof overhang supports 2.00 psf soffit load.

Calculated horizontal deflection is 0.48" due to live load and 0.76" due to dead load.

Hanger specified assumes connection to supporting chord is located a minimum of five times the depth of the supporting chord from any unsupported end, unless unsupported chord end has 85% plating coverage.

Bottom chord checked for 10.00 psf non-concurrent live load.

Calculated vertical deflection is 0.58" due to live load and 0.93" due to dead load at X = 15-0-0.

120 mph wind, 15.00 ft mean hgt, ASCE 7-10, CLOSED bldg, Located anywhere in roof, RISK CAT II, EXP B, wind TC DL=5.0 psf, wind BC DL=5.0 psf. GCpi(+/-)=0.18

Wind loads and reactions based on MWFRS with additional C&C member design.

H = recommended connection based on manufacturer tested capacities and calculations. Conditions may exist that require different connections than indicated. Refer to manufacturer publication for additional information.

(a) Continuous lateral bracing equally spaced on member.

Deflection meets L/240 live and L/180 total load. Creep increase factor for dead load is 1.50.

WARNING: Furnish a copy of this DWG to the installation contractor. Special care must be taken during handling, shipping and installation of trusses. See "WARNING" note below.

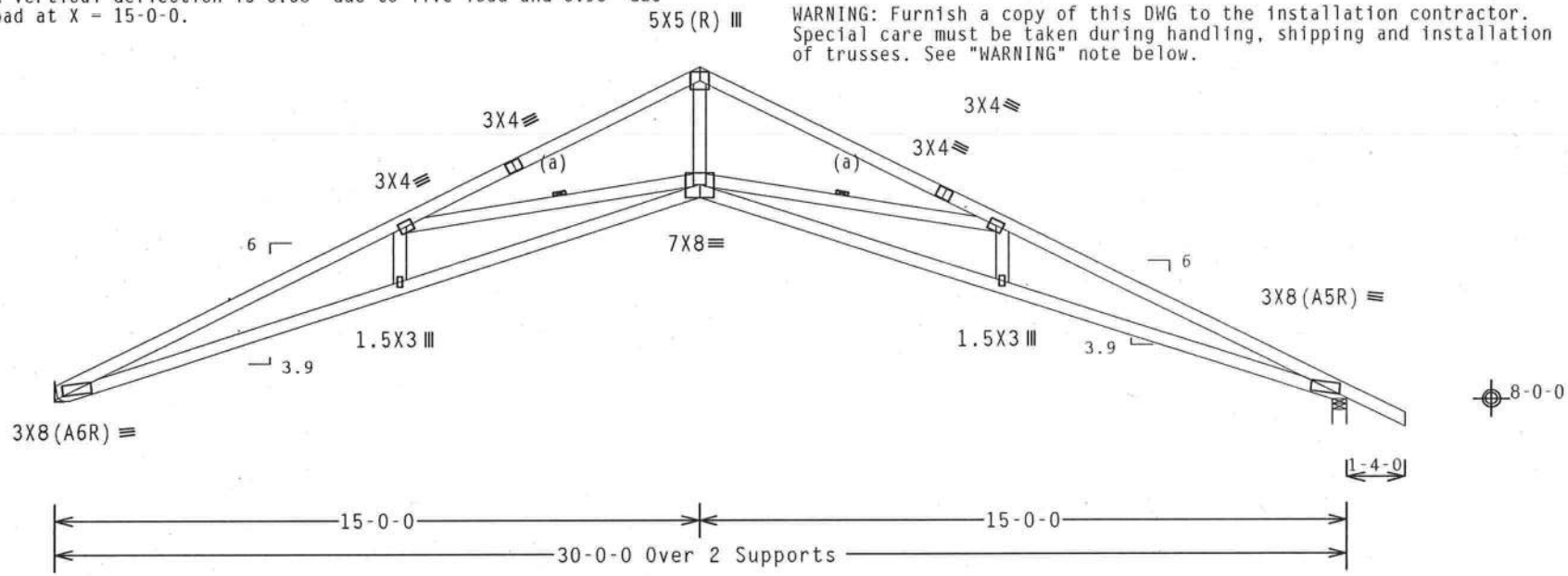

R=1248 U=0
RL=122/-117 H=Simpson LUS26

R=1343 U=0 W=4"

Design Crit: FBC2010Res/TPI-2007(STD) 10.03.11.0300.21

PLT TYP. Wave FT/RT=10%(0%)/0(0) QTY 15 FL/-/4/-/-/R/- Scale =.25"/Ft.

ALPINE
ITW Building Components Group Inc.
Haines City, FL 33844
FL COA #0 278

WARNING READ AND FOLLOW ALL NOTES ON THIS SHEET!
IMPORTANT FURNISH THIS DESIGN TO ALL CONTRACTORS INCLUDING INSTALLERS.

Trusses require extreme care in fabricating, handling, shipping, installing and bracing. Refer to and follow the latest edition of BCSI (Building Component Safety Information, by TPI and WTCA) for safety practices prior to performing these functions. Installers shall provide temporary bracing per BCSI. Unless noted otherwise, top chord shall have properly attached structural sheathing and bottom chord shall have a properly attached rigid ceiling. Locations shown for permanent lateral restraint of webs shall have bracing installed per BCSI sections B3, B7 or B10, as applicable.

ITW Building Components Group Inc. (ITWBCG) shall not be responsible for any deviation from this drawing, any failure to build the truss in conformance with ANSI/TPI 1, or for handling, shipping, installing and bracing of trusses. Apply plates to each face of truss and position as shown above and on the Joint Details, unless noted otherwise. Refer to drawings 160A-Z for standard plate positions. A seal on this drawing or cover page listing this drawing, indicates acceptance of professional engineering responsibility solely for the design shown. The suitability and use of this design for any structure is the responsibility of the Building Designer per ANSI/TPI 1 Sec.2. For more information see: This job's general notes page; ITW-BCG: www.itwbcg.com; TPI: www.tpinst.org; WTCA: www.sbcindustry.com; ICC: www.iccsafe.org

WALTER P. FINN LICENSE No. 22838 STATE OF FLORIDA PROFESSIONAL ENGINEER

04/13/2012

TC LL	20.0 PSF	REF	R487-- 21848
TC DL	10.0 PSF	DATE	04/13/12
BC DL	10.0 PSF	DRW	HCUSR487 12104029
BC LL	0.0 PSF	HC-ENG	SSB/WPF
TOT.LD.	40.0 PSF	SEQN-	283186
DUR.FAC.	1.25		
SPACING	24.0"	JREF-	1UL8487_Z01

THIS DWG PREPARED FROM COMPUTER INPUT (LOADS & DIMENSIONS) SUBMITTED BY TRUSS MFR.

(12-077--LAKE CITY INDUSTRIES Varney Garage Add. -- 655 NW Lona Loop Lake City, - AV1 30' Common)

Top chord 2x4 SP M-30
Bot chord 2x4 SP M-30
Webs 2x4 SP #3

Roof overhang supports 2.00 psf soffit load.

Calculated horizontal deflection is 0.47" due to live load and 0.76" due to dead load.

Bottom chord checked for 10.00 psf non-concurrent live load.

Calculated vertical deflection is 0.58" due to live load and 0.93" due to dead load at X = 15-0-0.

MWFRS loads based on trusses located at least 15.00 ft. from roof edge.

120 mph wind, 15.00 ft mean hgt, ASCE 7-10, CLOSED bldg, not located within 9.00 ft from roof edge, RISK CAT II, EXP B, wind TC DL=5.0 psf, wind BC DL=5.0 psf. GCpi(+/-)=0.18

Wind loads and reactions based on MWFRS with additional C&C member design.

(a) Continuous lateral bracing equally spaced on member.

Deflection meets L/240 live and L/180 total load. Creep increase factor for dead load is 1.50.

WARNING: Furnish a copy of this DWG to the installation contractor. Special care must be taken during handling, shipping and installation of trusses. See "WARNING" note below.

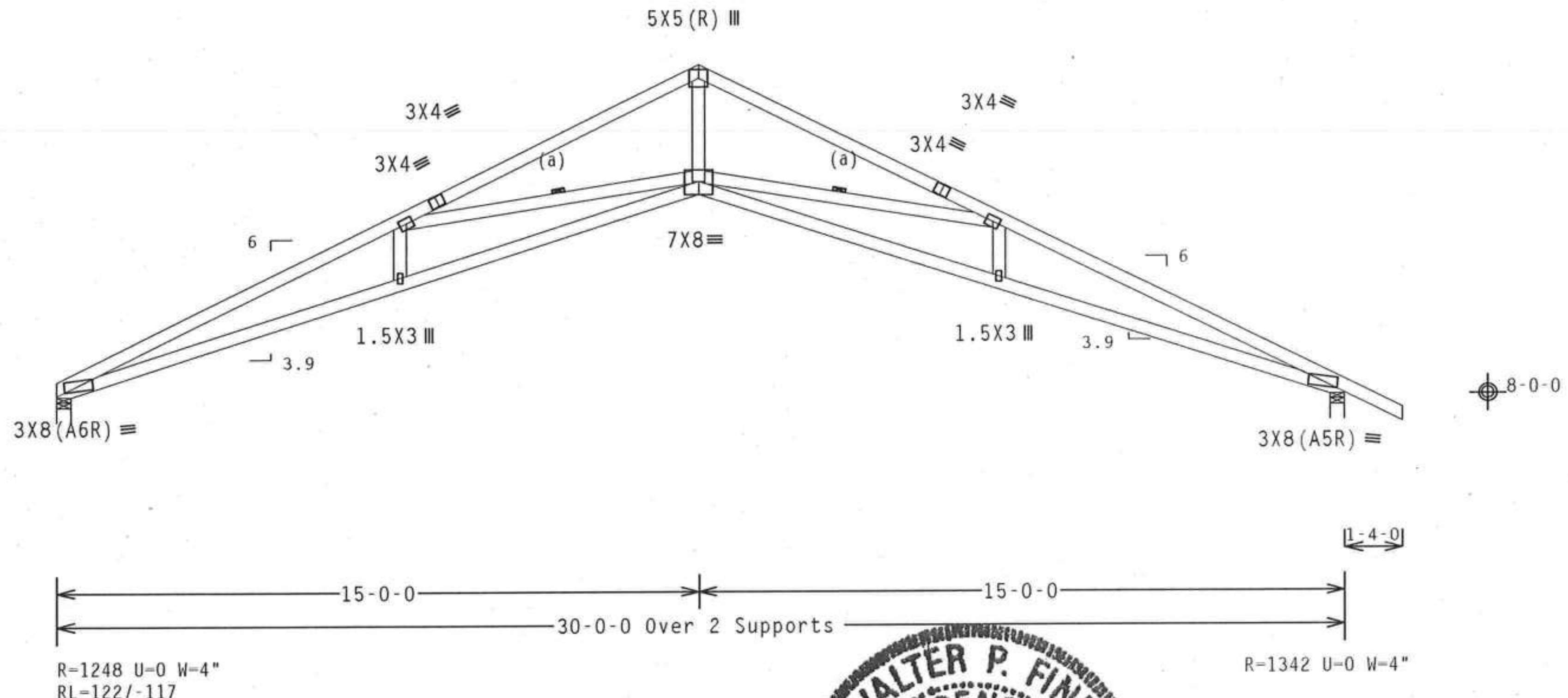

PLT TYP. Wave

Design Crit: FBC2010Res/TPI-2007(STD)
FT/RT=10%(0%)/0(0)

10.03. QTY:

FL/-/4/-/-/R/-

Scale =.25"/Ft.

ALPINE

ITW Building Components Group Inc.
Haines City, FL 33844
FL COA #0 278

WARNING READ AND FOLLOW ALL NOTES ON THIS SHEET!
IMPORTANT FURNISH THIS DESIGN TO ALL CONTRACTORS INCLUDING INSTALLERS.

Trusses require extreme care in fabricating, handling, shipping, installing and bracing. Refer to and follow the latest edition of BCSI (Building Component Safety Information, by TPI and WTCA) for safety practices prior to performing these functions. Installers shall provide temporary bracing per BCSI. Unless noted otherwise, top chord shall have properly attached structural sheathing and bottom chord shall have a properly attached rigid ceiling. Locations shown for permanent lateral restraint of webs shall have bracing installed per BCSI sections B3, B7 or B10, as applicable.

ITW Building Components Group Inc. (ITWBCG) shall not be responsible for any deviation from this drawing, any failure to build the truss in conformance with ANSI/TPI 1, or for handling, shipping, installation & bracing of trusses. Apply plates to each face of truss and position as shown above and on the Joint Details, unless noted otherwise. Refer to drawings 160A-Z for standard plate positions. A seal on this drawing or cover page listing this drawing, indicates acceptance of professional engineering responsibility solely for the design shown. The suitability and use of this design for any structure is the responsibility of the Building Designer per ANSI/TPI 1 Sec.2. For more information see: This job's general notes page: ITW-BCG: www.itwbcg.com; TPI: www.tpinst.org; WTCA: www.sbcindustry.com; ICC: www.iccsafe.org

WALTER P. FINN LICENSE No. 22839 STATE OF FLORIDA PROFESSIONAL ENGINEER

04/13/2012

TC LL	20.0 PSF	REF	R487-- 21849
TC DL	10.0 PSF	DATE	04/13/12
BC DL	10.0 PSF	DRW	HCUSR487 12104003
BC LL	0.0 PSF	HC-ENG	SSB/WPF
TOT.LD.	40.0 PSF	SEQN-	283183
DUR.FAC.	1.25		
SPACING	24.0"	JREF-	1UL8487_Z01

(12-077--LAKE CITY INDUSTRIES Varney Garage Add. -- 655 NW Lona Loop Lake City, - AV 30' Common)

Top chord 2x4 SP M-30
Bot chord 2x4 SP M-30
Webs 2x4 SP #3

Roof overhang supports 2.00 psf soffit load.

Calculated horizontal deflection is 0.48" due to live load and 0.75" due to dead load.

Bottom chord checked for 10.00 psf non-concurrent live load.

Calculated vertical deflection is 0.59" due to live load and 0.92" due to dead load at X = 15-0-0.

120 mph wind, 15.00 ft mean hgt, ASCE 7-10, CLOSED bldg, Located anywhere in roof, RISK CAT II, EXP B, wind TC DL=5.0 psf, wind BC DL=5.0 psf. GCpi(+/-)=0.18

Wind loads and reactions based on MWFRS with additional C&C member design.

(a) Continuous lateral bracing equally spaced on member.

Deflection meets L/240 live and L/180 total load. Creep increase factor for dead load is 1.50.

WARNING: Furnish a copy of this DWG to the installation contractor. Special care must be taken during handling, shipping and installation of trusses. See "WARNING" note below.

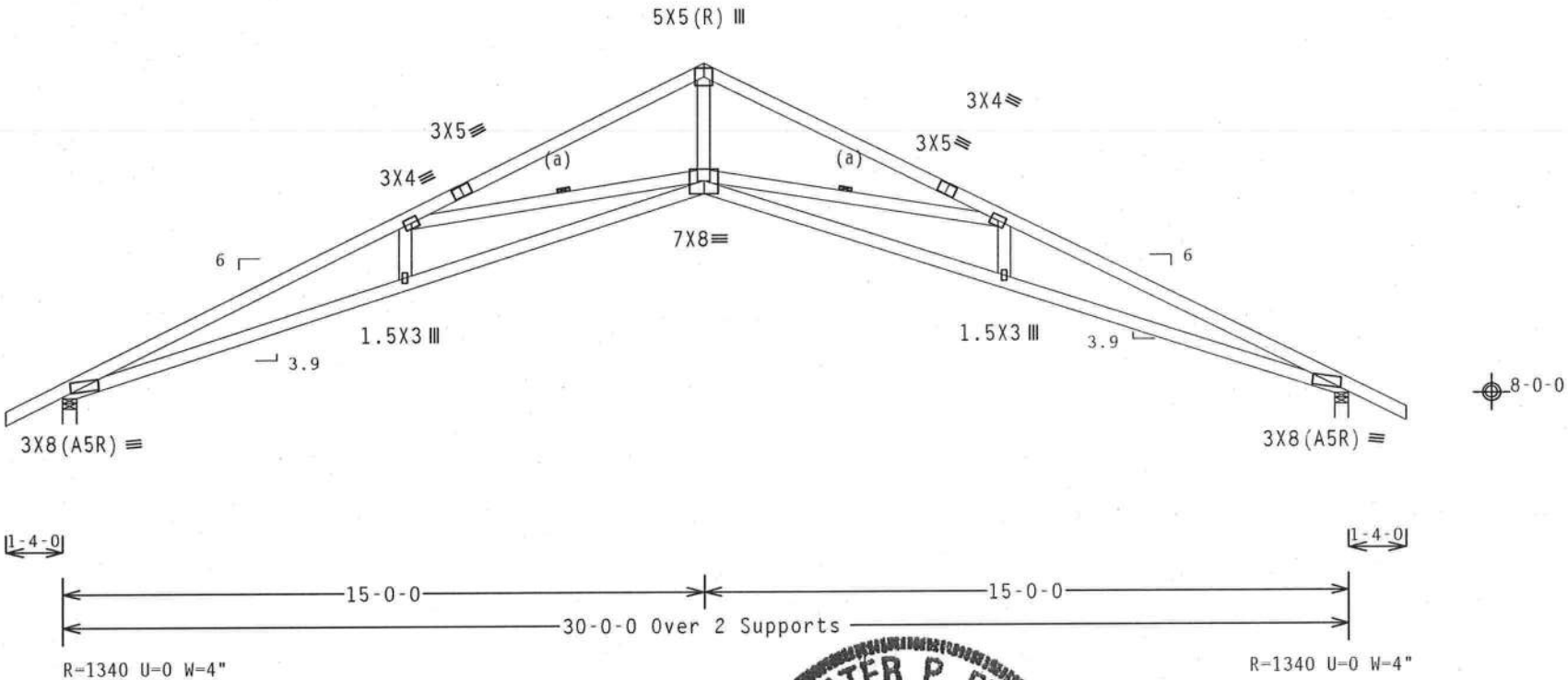

Design Crit: FBC2010Res/TPI-2007(STD) 10.03 11.0209 21 QTY 3 FL/-/4/-/-/R/- Scale =.25"/Ft.
FT/RT=10%(0%)/0(0)

PLT TYP. Wave

ALPINE
ITW Building Components Group Inc.
Haines City, FL 33844
FL COA #0 278

WARNING READ AND FOLLOW ALL NOTES ON THIS SHEET!
IMPORTANT FURNISH THIS DESIGN TO ALL CONTRACTORS INCLUDING INSTALLERS.

Trusses require extreme care in fabricating, handling, shipping, installing and bracing. Refer to and follow the latest edition of BCSI (Building Component Safety Information, by TPI and WTCA) for safety practices prior to performing these functions. Installers shall provide temporary bracing per BCSI. Unless noted otherwise, top chord shall have properly attached structural sheathing and bottom chord shall have a properly attached rigid ceiling. Locations shown for permanent lateral restraint of webs shall have bracing installed per BCSI sections B3, B7 or B10, as applicable.

ITW Building Components Group Inc. (ITWBCG) shall not be responsible for any deviation from this drawing, any failure to build the truss in conformance with ANSI/TPI 1, or for handling, shipping, installing and bracing of trusses. Apply plates to each face of truss and position as shown above and on the Joint Details, unless noted otherwise. Refer to drawings 160A-Z for standard plate positions. A seal on this drawing or cover page listing this drawing, indicates acceptance of professional engineering responsibility solely for the design shown. The suitability and use of this design for any structure is the responsibility of the Building Designer per ANSI/TPI 1 Sec.2. For more information see: this job's general notes page; ITW-BCG: www.itwbcg.com; TPI: www.tpinst.org; WTCA: www.sbcindustry.com; ICC: www.iccsafe.org

WALTER P. FINN LICENSE No.22839 STATE OF FLORIDA PROFESSIONAL ENGINEER
04/13/2012

TC LL	20.0 PSF	REF	R487-- 21850
TC DL	10.0 PSF	DATE	04/13/12
BC DL	10.0 PSF	DRW	HCUSR487 12104004
BC LL	0.0 PSF	HC-ENG	SSB/WPF
TOT.LD.	40.0 PSF	SEQN-	283174
DUR.FAC.	1.25		
SPACING	24.0"	JREF-	1UL8487_Z01

THIS DWG PREPARED FROM COMPUTER INPUT (LOADS & DIMENSIONS) SUBMITTED BY TRUSS MFR.

(12-077--LAKE CITY INDUSTRIES Varney Garage Add. -- 655 NW Lona Loop Lake City, - AV1 30' Common)

Top chord 2x4 SP M-30
Bot chord 2x4 SP M-30
Webs 2x4 SP #3

Roof overhang supports 2.00 psf soffit load.

Calculated horizontal deflection is 0.47" due to live load and 0.76" due to dead load.

Bottom chord checked for 10.00 psf non-concurrent live load.

Calculated vertical deflection is 0.58" due to live load and 0.93" due to dead load at X = 15-0-0.

MWFRS loads based on trusses located at least 7.50 ft. from roof edge.

120 mph wind, 15.00 ft mean hgt, ASCE 7-10, CLOSED bldg, not located within 9.00 ft from roof edge, RISK CAT II, EXP B, wind TC DL=5.0 psf, wind BC DL=5.0 psf. GCpi(+/-)=0.18

Wind loads and reactions based on MWFRS with additional C&C member design.

(a) Continuous lateral bracing equally spaced on member.

Deflection meets L/240 live and L/180 total load. Creep increase factor for dead load is 1.50.

WARNING: Furnish a copy of this DWG to the installation contractor. Special care must be taken during handling, shipping and installation of trusses. See "WARNING" note below.

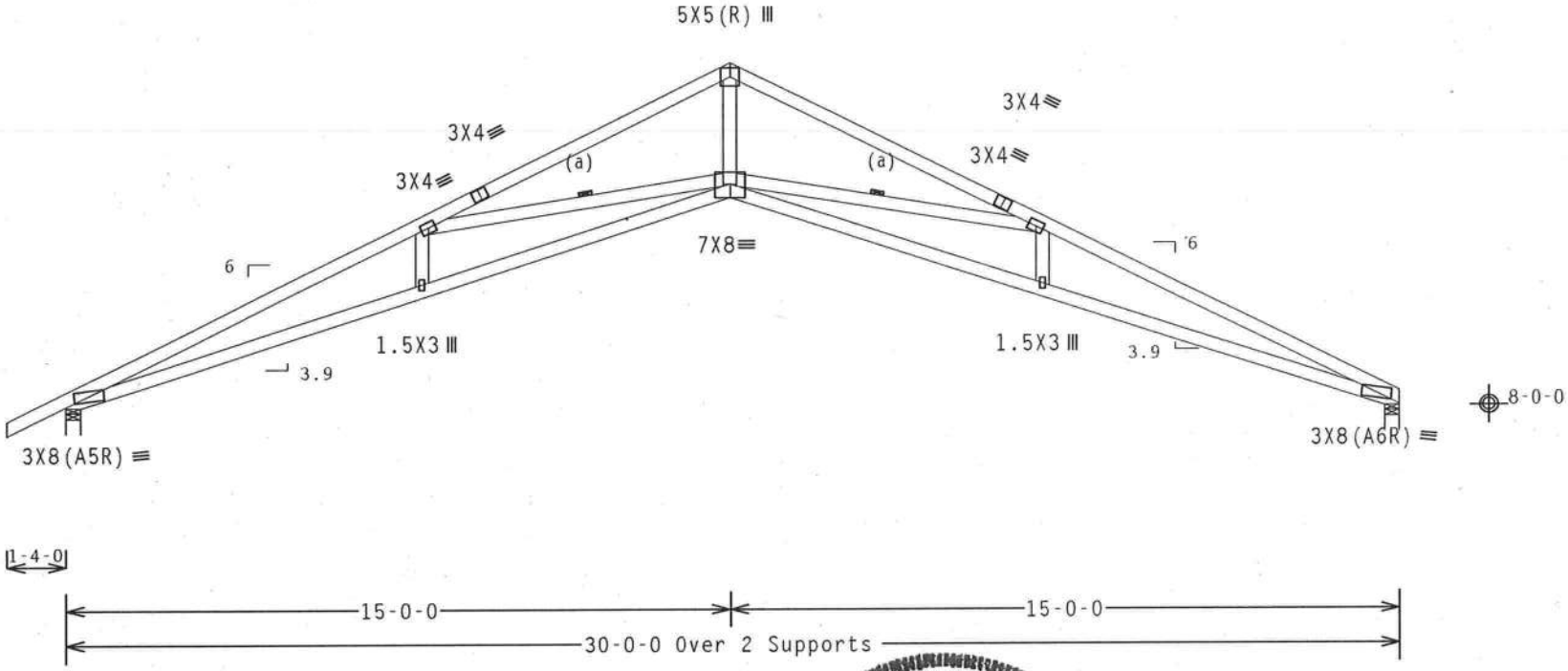

Design Crit: FBC2010Res/TPI-2007(STD) 10.03 11.0209 21 QTY 1 FL/-/4/-/-/R/-

PLT TYP. Wave FT/RT=10%(0%)/0(0) Scale =.25"/Ft.

ALPINE
ITW Building Components Group Inc.
Haines City, FL 33844
FL COA #0 278

WARNING READ AND FOLLOW ALL NOTES ON THIS SHEET!
IMPORTANT FURNISH THIS DESIGN TO ALL CONTRACTORS INCLUDING INSTALLERS.

Trusses require extreme care in fabricating, handling, shipping, installing and bracing. Refer to and follow the latest edition of BCSI (Building Component Safety Information, by TPI and WTCA) for safety practices prior to performing these functions. Installers shall provide temporary bracing per BCSI. Unless noted otherwise, top chord shall have properly attached structural sheathing and bottom chord shall have a properly attached rigid ceiling. Locations shown for permanent lateral restraint of webs shall have bracing installed per BCSI sections B3, B7 or B10, as applicable.

ITW Building Components Group Inc. (ITWBCG) shall not be responsible for any deviation from this design, any failure to build the truss in conformance with ANSI/TPI 1, or for handling, shipping, installing and bracing of trusses. Apply plates to each face of truss and position as shown above and on the Joint Details, unless noted otherwise. Refer to drawings 160A-Z for standard plate positions. A seal on this drawing or cover page listing this drawing, indicates acceptance of professional engineering responsibility solely for the design shown. The suitability and use of this design for any structure is the responsibility of the Building Designer per ANSI/TPI 1 Sec.2. For more information see: This job's general notes page; ITW-BCG: www.itwbcg.com; TPI: www.tpinst.org; WTCA: www.sbcindustry.com; ICC: www.iccsafe.org

WALTER P. FINN LICENSE No.22839 STATE OF FLORIDA PROFESSIONAL ENGINEER
04/13/2012

TC LL	20.0 PSF	REF	R487-- 21851
TC DL	10.0 PSF	DATE	04/13/12
BC DL	10.0 PSF	DRW	HCUSR487 12104005
BC LL	0.0 PSF	HC-ENG	SSB/WPF
TOT.LD.	40.0 PSF	SEQN-	283180
DUR.FAC.	1.25		
SPACING	24.0"	JREF-	1UL8487_Z01

(12-077--LAKE CITY INDUSTRIES Varney Garage Add. -- 655 NW Lona Loop Lake City, - AV1 30' Common)

Top chord 2x4 SP M-30
Bot chord 2x4 SP M-30
Webs 2x4 SP #3

Roof overhang supports 2.00 psf soffit load.

Calculated horizontal deflection is 0.48" due to live load and 0.76" due to dead load.

Hanger specified assumes connection to supporting chord is located a minimum of five times the depth of the supporting chord from any unsupported end, unless unsupported chord end has 85% plating coverage.

(a) Continuous lateral bracing equally spaced on member.

Deflection meets L/240 live and L/180 total load. Creep increase factor for dead load is 1.50.

WARNING: Furnish a copy of this DWG to the installation contractor. Special care must be taken during handling, shipping and installation of trusses. See "WARNING" note below.

120 mph wind, 15.00 ft mean hgt, ASCE 7-10, CLOSED bldg, not located within 4.50 ft from roof edge, RISK CAT II, EXP B, wind TC DL=5.0 psf, wind BC DL=5.0 psf. GCpi(+/-)=0.18

Wind loads and reactions based on MWFRS with additional C&C member design.

H = recommended connection based on manufacturer tested capacities and calculations. Conditions may exist that require different connections than indicated. Refer to manufacturer publication for additional information.

Bottom chord checked for 10.00 psf non-concurrent live load.

Calculated vertical deflection is 0.58" due to live load and 0.93" due to dead load at X = 15-0-0.

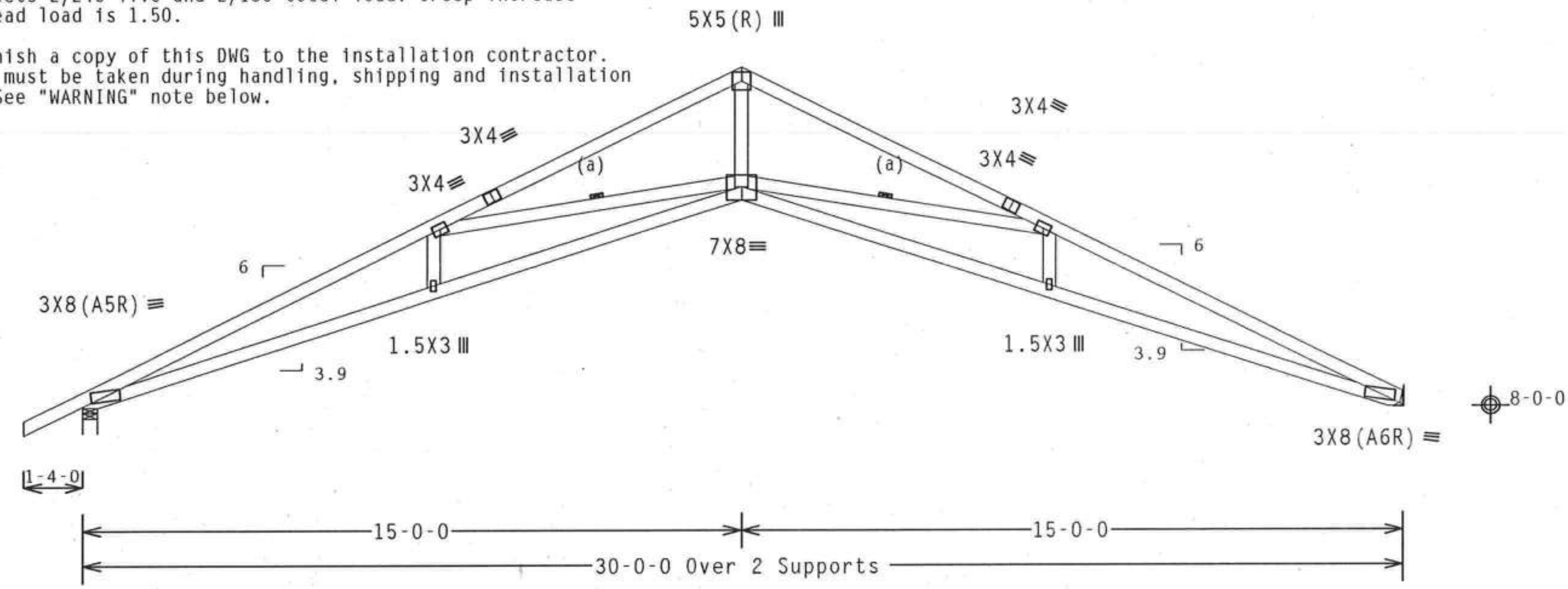

R=1248 U=0 H=Simpson LUS26

R=1343 U=0 W=4"
RL=117/-122

Design Crit: FBC2010Res/TPI-2007(STD)
FT/RT=10%(0%)/0(0) 10.03.1 QTY:

PLT TYP. Wave

ALPINE
ITW Building Components Group Inc.
Haines City, FL 33844
FL COA #0 278

WARNING READ AND FOLLOW ALL NOTES ON THIS SHEET!
IMPORTANT FURNISH THIS DESIGN TO ALL CONTRACTORS INCLUDING INSTALLERS.

Trusses require extreme care in fabricating, handling, shipping, installing and bracing. Refer to and follow the latest edition of BCSI (Building Component Safety Information, by TPI and WTCA) for safety practices prior to performing these functions. Installers shall provide temporary bracing per BCSI. Unless noted otherwise, top chord shall have properly attached structural sheathing and bottom chord shall have a properly attached rigid ceiling. Locations shown for permanent lateral restraint of webs shall have bracing installed per BCSI sections B3, B7 or B10, as applicable.

ITW Building Components Group Inc. (ITWBCG) shall not be responsible for any deviation from this design, any failure to build the truss in conformance with ANSI/TPI 1, or for handling, shipping, installation & bracing of trusses. Apply plates to each face of truss and position as shown above and on the Joint Details, unless noted otherwise. Refer to drawings 160A-Z for standard plate positions. A seal on this drawing or cover page listing this drawing, indicates acceptance of professional engineering responsibility solely for the design shown. The suitability and use of this design for any structure is the responsibility of the Building Designer per ANSI/TPI 1 Sec.2. For more information see: This job's general notes page; ITW-BCG: www.itwbcg.com; TPI: www.tpinst.org; WTCA: www.sbcindustry.com; ICC: www.iccsafe.org

WALTER P. FINN
LICENSE
No. 22839
STATE OF FLORIDA
PROFESSIONAL ENGINEER

04/13/2012

FL/-/4/-/-/R/-		Scale =.25"/Ft.	
TC LL	20.0 PSF	REF	R487-- 21852
TC DL	10.0 PSF	DATE	04/13/12
BC DL	10.0 PSF	DRW	HCUSR487 12104006
BC LL	0.0 PSF	HC-ENG	SSB/WPF
TOT.LD.	40.0 PSF	SEQN-	283177
DUR.FAC.	1.25		
SPACING	24.0"	JREF-	1UL8487_Z01

THIS DWG PREPARED FROM COMPUTER INPUT (LOADS & DIMENSIONS) SUBMITTED BY TRUSS MFR.

(12-077--LAKE CITY INDUSTRIES Varney Garage Add. -- 655 NW Lona Loop Lake City, - AVGE 30' Gable)

Top chord 2x4 SP #1
Bot chord 2x4 SP #1
Webs 2x4 SP #3
:Stack Chord SC1 2x4 SP #1:

Right cantilever is exposed to wind

Roof overhang supports 2.00 psf soffit load.

Gable end supports 8" max rake overhang.

(a) 1x4 #3SRB SPF-S or better "L" brace. 80% length of web member. Attach with 8d Box or Gun (0.113"x2.5",min.)nails @ 6" OC.

Bottom chord checked for 10.00 psf non-concurrent live load.

Deflection meets L/240 live and L/180 total load. Creep increase factor for dead load is 1.50.

+ MEMBER TO BE LATERALLY BRACED FOR OUT OF PLANE WIND LOADS. BRACING SYSTEM TO BE DESIGNED AND FURNISHED BY OTHERS.

(**) 2 plate(s) require special positioning. Refer to scaled plate plot details for special positioning requirements.

120 mph wind, 15.00 ft mean hgt, ASCE 7-10, CLOSED bldg, Located anywhere in roof, RISK CAT II, EXP B, wind TC DL=5.0 psf, wind BC DL=5.0 psf. GCpi(+/-)=0.18

Wind loads and reactions based on MWFRS with additional C&C member design.

See DWGS A12015ENC100212, GBLLETIN0212, & GABRST100212 for more requirements.

Stacked top chord must NOT be notched or cut in area (NNL). Dropped top chord braced at 24" o.c. intervals. Attach stacked top chord (SC) to dropped top chord in notchable area using 3x4 tie-plates 24" o.c. Center plate on stacked/dropped chord interface, plate length perpendicular to chord length. Splice top chord in notchable area using 3x6.

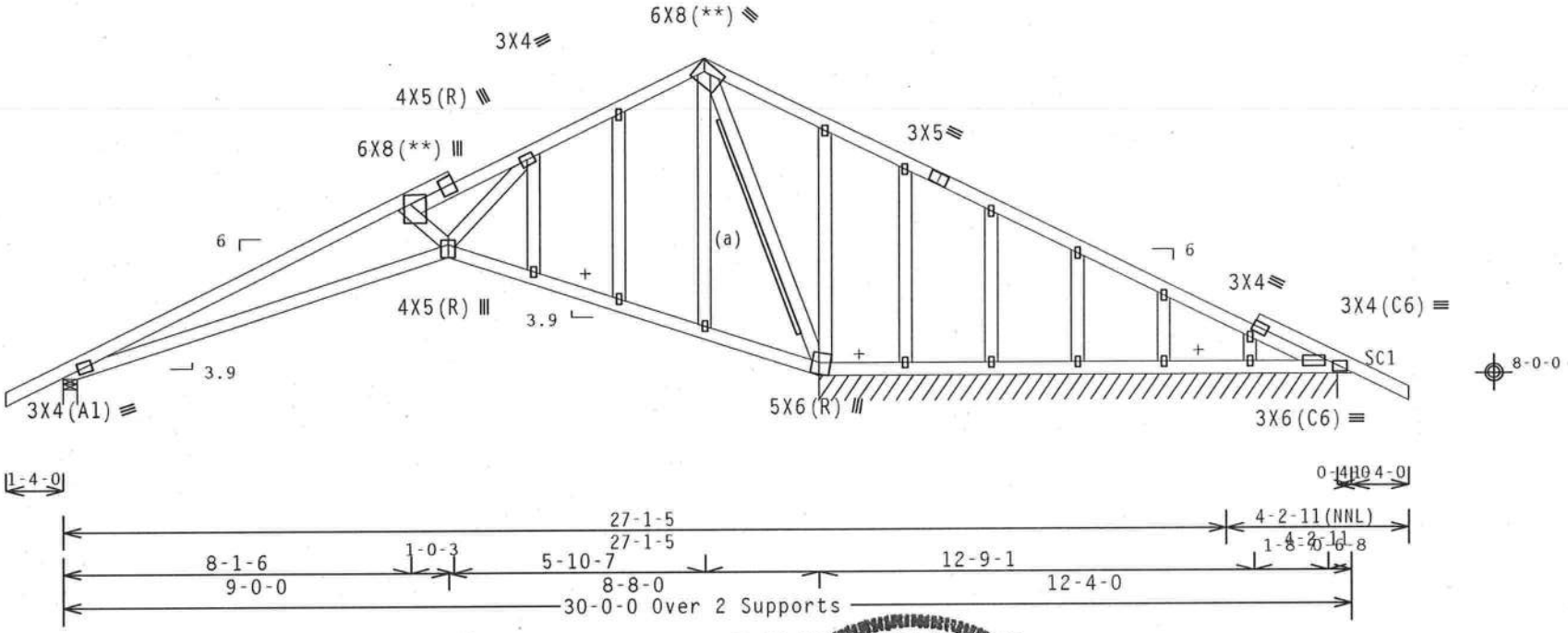

Note: All Plates Are 1.5X3 Except As Shown.

Design Crit: FBC2010Res/TPI-2007(STD)

PLT TYP. Wave FT/RT=10%(0%)/0(0) 10:03 11.0209.21 QTY 1 FL/-/4/-/-/R/- Scale =.25"/Ft.

ALPINE
ITW Building Components Group Inc.
Haines City, FL 33844
FL COA #0 278

WARNING READ AND FOLLOW ALL NOTES ON THIS SHEET!
IMPORTANT FURNISH THIS DESIGN TO ALL CONTRACTORS INCLUDING INSTALLERS.

Trusses require extreme care in fabricating, handling, shipping, installing and bracing. Refer to and follow the latest edition of BCSI (Building Component Safety Information, by TPI and WTCA) [illegible] practices prior to performing these functions. Installers shall provide temporary bracing [illegible] BCSI. Unless noted otherwise, top chord shall have properly attached structural sheathing and bottom chord shall have a properly attached rigid ceiling. Locations shown for permanent lateral restraint of web members shall have bracing installed per BCSI sections B3, B7 or B10, as applicable.

ITW Building Components Group Inc. (ITWBCG) shall not be responsible for any deviation from [illegible] any failure to build the truss in conformance with ANSI/TPI 1, or for handling, shipping, installing and bracing of trusses. Apply plates to each face of truss and position as shown above and on the Joint Details, unless noted otherwise. Refer to drawings 160A-2 for standard plate positions. A seal on this drawing or cover page listing this drawing, indicates acceptance of professional engineering responsibility solely for the design shown. The suitability and use of this design for any structure is the responsibility of the Building Designer per ANSI/TPI 1 Sec.2. For more information see: This job's general notes page; ITW-BCG: www.itwbcg.com; TPI: www.tpinst.org; WTCA: www.sbcindustry.com; ICC: www.iccsafe.org

WALTER P. FINN LICENSE No.22839 STATE OF FLORIDA PROFESSIONAL ENGINEER

04/13/2012

TC LL	20.0 PSF	REF	R487-- 21853
TC DL	10.0 PSF	DATE	04/13/12
BC DL	10.0 PSF	DRW	HCUSR487 12104007
BC LL	0.0 PSF	HC-ENG	SSB/WPF
TOT.LD.	40.0 PSF	SEQN-	283262
DUR.FAC.	1.25		
SPACING	24.0"	JREF-	1UL8487_Z01

THIS DWG PREPARED FROM COMPUTER INPUT (LOADS & DIMENSIONS) SUBMITTED BY TRUSS MFR.

(12-077--LAKE CITY INDUSTRIES Varney Garage Add. -- 655 NW Lona Loop Lake City, - H13B 30' Stepdown Hip)

Top chord 2x4 SP M-30
Bot chord 2x4 SP M-30
Webs 2x4 SP #3

In lieu of structural panels use purlins to brace all flat TC @ 24" OC.

Bottom chord checked for 10.00 psf non-concurrent live load.

MWFRS loads based on trusses located at least 7.50 ft. from roof edge.

120 mph wind, 15.00 ft mean hgt, ASCE 7-10, CLOSED bldg, not located within 9.00 ft from roof edge, RISK CAT II, EXP B, wind TC DL=5.0 psf, wind BC DL=5.0 psf. GCpi(+/-)=0.18

Wind loads and reactions based on MWFRS with additional C&C member design.

Deflection meets L/240 live and L/180 total load. Creep increase factor for dead load is 1.50.

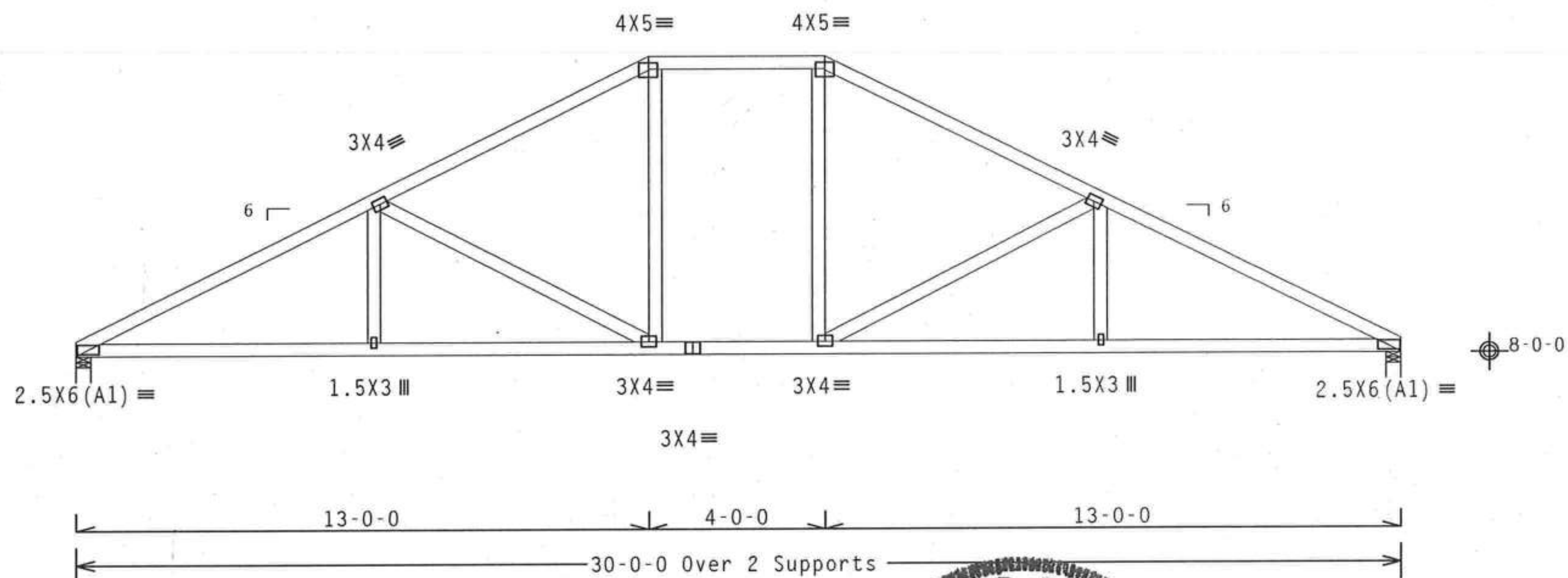

R=1235 U=0 W=4"
RL=95/-95

R=1235 U=0 W=4"

PLT TYP. Wave

Design Crit: FBC2010Res/TPI-2007(STD)
FT/RT=10%(0%)/0(0)

10.03.1 No.22839 QTY:

FL/-/4/-/-/R/-

Scale =.25"/Ft.

ALPINE
ITW Building Components Group Inc.
Haines City, FL 33844
FL COA #0 278

WARNING READ AND FOLLOW ALL NOTES ON THIS SHEET!
IMPORTANT FURNISH THIS DESIGN TO ALL CONTRACTORS INCLUDING INSTALLERS.

Trusses require extreme care in fabricating, handling, shipping, installing and bracing. Refer to and follow the latest edition of BCSI (Building Component Safety Information, by TPI and WTCA) for safety practices prior to performing these functions. Installers shall provide temporary bracing per BCSI. Unless noted otherwise, top chord shall have properly attached structural sheathing and bottom chord shall have a properly attached rigid ceiling. Locations shown for permanent lateral restraint of webs shall have bracing installed per BCSI sections B3, B7 or B10, as applicable.

ITW Building Components Group Inc. (ITWBCG) shall not be responsible for any deviation from this design, any failure to build the truss in conformance with ANSI/TPI 1, or for handling, shipping, installation & bracing of trusses. Apply plates to each face of truss and position as shown above and on the Joint Details, unless noted otherwise. Refer to drawings 160A-Z for standard plate positions. A seal on this drawing or cover page listing this drawing, indicates acceptance of professional engineering responsibility solely for the design shown. The suitability and use of this design for any structure is the responsibility of the Building Designer per ANSI/TPI 1 Sec.2. For more information see: This job's general notes page: ITW-BCG: www.itwbcg.com; TPI: www.tpinst.org; WTCA: www.sbcindustry.com; ICC: www.iccsafe.org

WALTER P. FINN LICENSE No. 22839 ★ STATE OF FLORIDA ★ PROFESSIONAL ENGINEER

04/13/2012

TC LL	20.0 PSF	REF	R487-- 21854
TC DL	10.0 PSF	DATE	04/13/12
BC DL	10.0 PSF	DRW	HCUSR487 12104008
BC LL	0.0 PSF	HC-ENG	SSB/WPF
TOT.LD.	40.0 PSF	SEQN-	283220
DUR.FAC.	1.25		
SPACING	24.0"	JREF-	1UL8487_Z01

THIS DWG PREPARED FROM COMPUTER INPUT (LOADS & DIMENSIONS) SUBMITTED BY TRUSS MFR.

(12-077--LAKE CITY INDUSTRIES Varney Garage Add. -- 655 NW Lona Loop Lake City, - H11B 30' Stepdown Hip)

Top chord 2x4 SP M-30
Bot chord 2x4 SP M-30
Webs 2x4 SP #3

Roof overhang supports 2.00 psf soffit load.

In lieu of structural panels use purlins to brace all flat TC @ 24" OC.

Deflection meets L/240 live and L/180 total load. Creep increase factor for dead load is 1.50.

120 mph wind, 15.00 ft mean hgt, ASCE 7-10, CLOSED bldg, not located within 9.00 ft from roof edge, RISK CAT II, EXP B, wind TC DL=5.0 psf, wind BC DL=5.0 psf. GCpi(+/-)=0.18

Wind loads and reactions based on MWFRS with additional C&C member design.

Bottom chord checked for 10.00 psf non-concurrent live load.

MWFRS loads based on trusses located at least 7.50 ft. from roof edge.

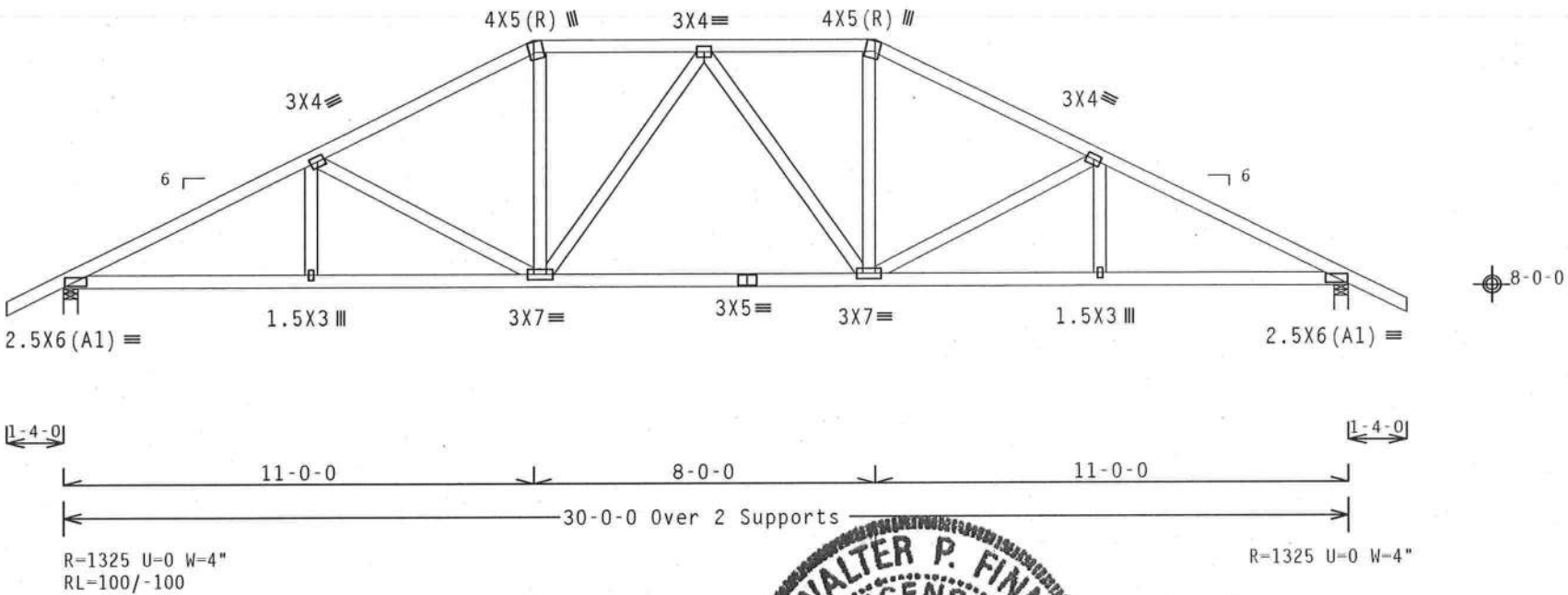

Design Crit: FBC2010Res/TPI-2007(STD)
FT/RT=10%(0%)/0(0)

PLT TYP. Wave

10.03.[illegible] QTY: [illegible]

FL/-/4/-/-/R/-

Scale =.25"/Ft.

ALPINE
ITW Building Components Group Inc.
Haines City, FL 33844
FL COA #0 278

WARNING READ AND FOLLOW ALL NOTES ON THIS SHEET!
IMPORTANT FURNISH THIS DESIGN TO ALL CONTRACTORS INCLUDING INSTALLERS.

Trusses require extreme care in fabricating, handling, shipping, installing and bracing. Refer to and follow the latest edition of BCSI (Building Component Safety Information, by TPI and WTCA) for safety practices prior to performing these functions. Installers shall provide temporary bracing per BCSI. Unless noted otherwise, top chord shall have properly attached structural sheathing and bottom chord shall have a properly attached rigid ceiling. Locations shown for permanent lateral restraint of webs shall have bracing installed per BCSI sections B3, B7 or B10, as applicable.

ITW Building Components Group Inc. (ITWBCG) shall not be responsible for any deviation from this design, any failure to build the truss in conformance with ANSI/TPI 1, or for handling, shipping, installation and bracing of trusses. Apply plates to each face of truss and position as shown above and on the Joint Details, unless noted otherwise. Refer to drawings 160A-Z for standard plate positions. A seal on this drawing or cover page listing this drawing, indicates acceptance of professional engineering responsibility solely for the design shown. The suitability and use of this design for any structure is the responsibility of the Building Designer per ANSI/TPI 1 Sec.2. For more information see: This job's general notes page; ITW-BCG: www.itwbcg.com; TPI: www.tpinst.org; WTCA: www.sbcindustry.com; ICC: www.iccsafe.org

WALTER P. FINN
LICENSE
No.22839
STATE OF FLORIDA
PROFESSIONAL ENGINEER

04/13/2012

TC LL	20.0 PSF	REF R487-- 21855
TC DL	10.0 PSF	DATE 04/13/12
BC DL	10.0 PSF	DRW HCUSR487 12104009
BC LL	0.0 PSF	HC-ENG SSB/WPF
TOT.LD.	40.0 PSF	SEQN- 283217
DUR.FAC.	1.25	
SPACING	24.0"	JREF- 1UL8487_Z01

(12-077--LAKE CITY INDUSTRIES Varney Garage Add. -- 655 NW Lona Loop Lake City, - H9B 30' Stepdown Hip)

Top chord 2x4 SP M-30
Bot chord 2x4 SP M-30
Webs 2x4 SP #3

Roof overhang supports 2.00 psf soffit load.

In lieu of structural panels use purlins to brace all flat TC @ 24" OC.

Deflection meets L/240 live and L/180 total load. Creep increase factor for dead load is 1.50.

120 mph wind, 15.00 ft mean hgt, ASCE 7-10, CLOSED bldg, not located within 9.00 ft from roof edge, RISK CAT II, EXP B, wind TC DL=5.0 psf, wind BC DL=5.0 psf. GCpi(+/-)=0.18

Wind loads and reactions based on MWFRS with additional C&C member design.

Bottom chord checked for 10.00 psf non-concurrent live load.

MWFRS loads based on trusses located at least 7.50 ft. from roof edge.

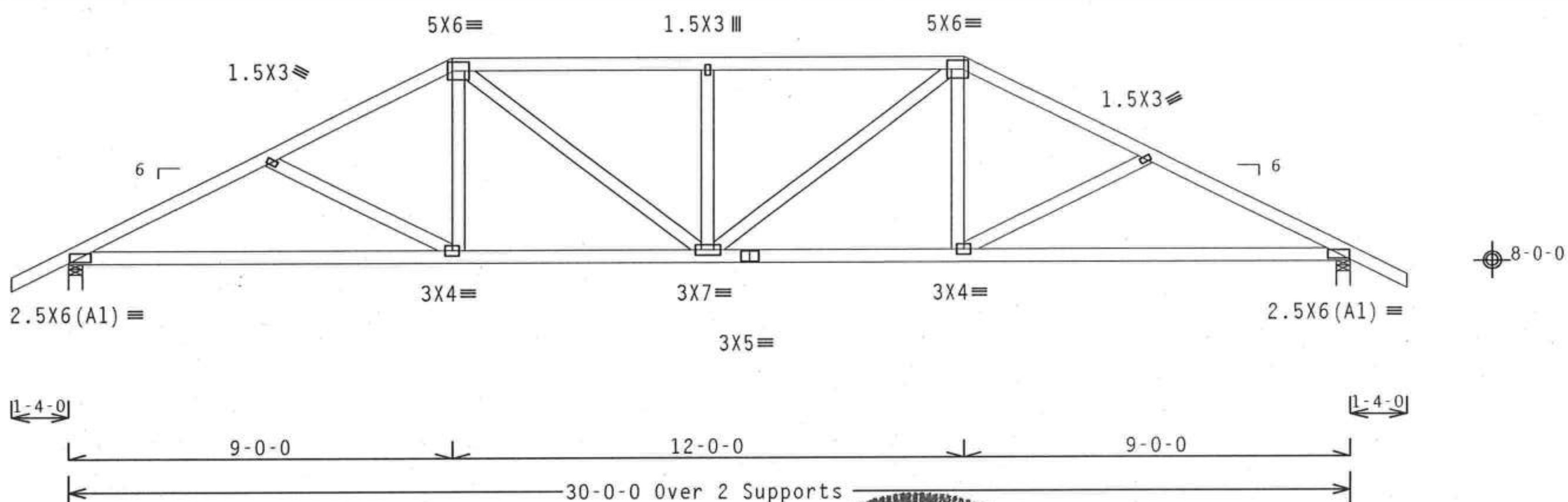

R=1325 U=2 W=4"
RL=86/-86

R=1325 U=2 W=4"

PLT TYP. Wave

Design Crit: FBC2010Res/TPI-2007(STD)
FT/RT=10%(0%)/0(0)

10.03.11.0200.01 QTY:1

FL/-/4/-/-/R/-		Scale =.25"/Ft.
TC LL	20.0 PSF	REF R487-- 21856
TC DL	10.0 PSF	DATE 04/13/12
BC DL	10.0 PSF	DRW HCUSR487 12104010
BC LL	0.0 PSF	HC-ENG SSB/WPF
TOT.LD.	40.0 PSF	SEQN- 283214
DUR.FAC.	1.25	
SPACING	24.0"	JREF- 1UL8487_Z01

ALPINE
ITW Building Components Group Inc.
Haines City, FL 33844
FL COA #0 278

WARNING READ AND FOLLOW ALL NOTES ON THIS SHEET!
IMPORTANT FURNISH THIS DESIGN TO ALL CONTRACTORS INCLUDING INSTALLERS.

Trusses require extreme care in fabricating, handling, shipping, installing and bracing. Refer to and follow the latest edition of BCSI (Building Component Safety Information, by TPI and WTCA) for safety practices prior to performing these functions. Installers shall provide temporary bracing per BCSI. Unless noted otherwise, top chord shall have properly attached structural sheathing and bottom chord shall have a properly attached rigid ceiling. Locations shown for permanent lateral restraint of webs shall have bracing installed per BCSI sections B3, B7 or B10, as applicable.

ITW Building Components Group Inc. (ITWBCG) shall not be responsible for any deviation from this design, any failure to build the truss in conformance with ANSI/TPI 1, or for handling, shipping, installation or bracing of trusses. Apply plates to each face of truss and position as shown above and on the Joint Details, unless noted otherwise. Refer to drawings 160A-Z for standard plate positions. A seal on this drawing or cover page listing this drawing, indicates acceptance of professional engineering responsibility solely for the design shown. The suitability and use of this design for any structure is the responsibility of the Building Designer per ANSI/TPI 1 Sec.2. For more information see: This job's general notes page: ITW-BCG: www.itwbcg.com; TPI: www.tpinst.org; WTCA: www.sbcindustry.com; ICC: www.iccsafe.org

WALTER P. FINN
LICENSE
No. 22839
STATE OF FLORIDA
PROFESSIONAL ENGINEER

04/13/2012

THIS DWG PREPARED FROM COMPUTER INPUT (LOADS & DIMENSIONS) SUBMITTED BY TRUSS MFR.

(12-077--LAKE CITY INDUSTRIES Varney Garage Add. -- 655 NW Lona Loop Lake City, - BG 30' Stepdown Hip Girder)

Top chord 2x4 SP M-30
Bot chord 2x6 SP M-26
Webs 2x4 SP #3
:Lt Wedge 2x8 SP #1 Dense::Rt Wedge 2x8 SP #1 Dense:

120 mph wind, 15.00 ft mean hgt, ASCE 7-10, CLOSED bldg, Located anywhere in roof, RISK CAT II, EXP B, wind TC DL=5.0 psf, wind BC DL=5.0 psf. GCpi(+/-)=0.18

Wind loads and reactions based on MWFRS with additional C&C member design.

Girder supports 30-0-0 span to BC one face and 2-0-0 span to TC/BC split opposite face.

2 COMPLETE TRUSSES REQUIRED

Nail Schedule:0.131"x3", min. nails
Top Chord: 1 Row @12.00" o.c.
Bot Chord: 1 Row @ 5.50" o.c.
Webs : 1 Row @ 4" o.c.
Use equal spacing between rows and stagger nails in each row to avoid splitting.
4" o.c. spacing of nails perpendicular and parallel to grain required in area over bearings greater than 4"

In lieu of structural panels use purlins to brace all flat TC @ 24" OC.

Deflection meets L/240 live and L/180 total load. Creep increase factor for dead load is 1.50.

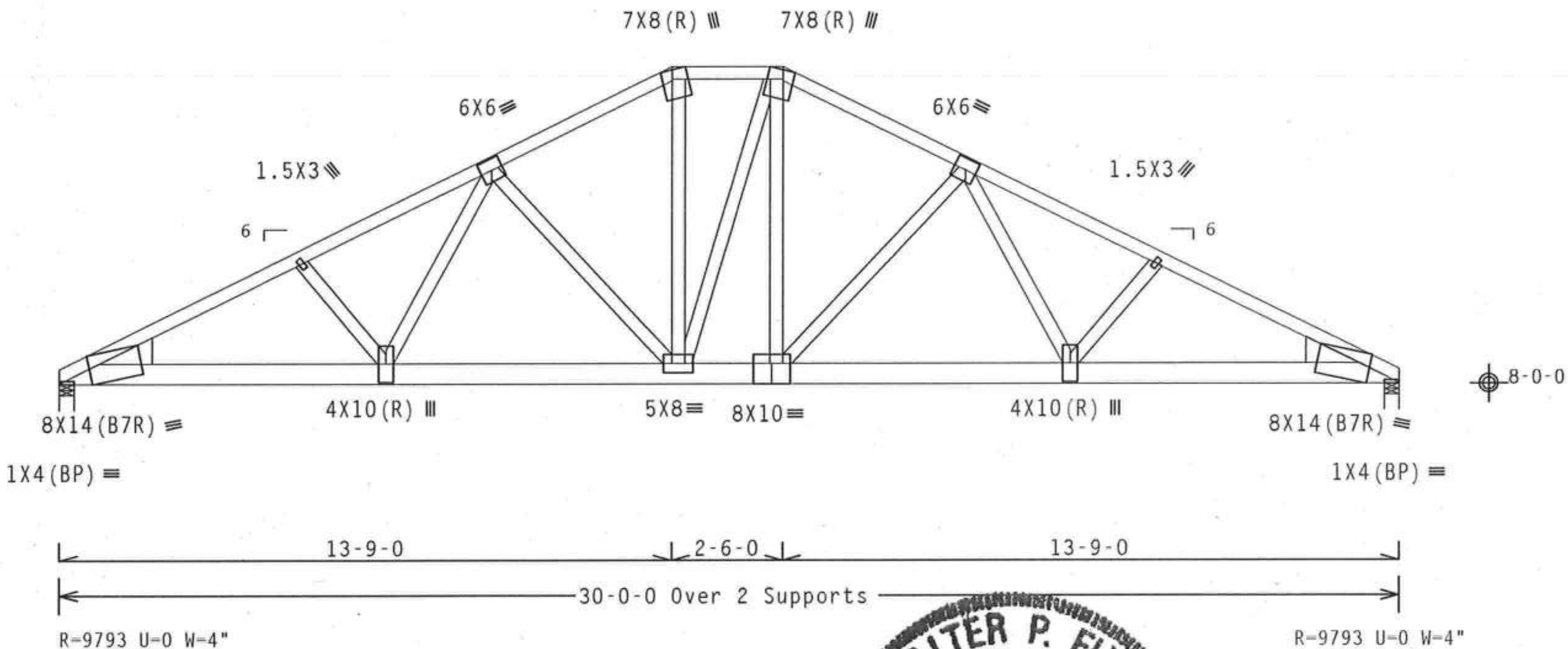

PLT TYP. Wave

Design Crit: FBC2010Res/TPI-2007(STD)
FT/RT=10%(0%)/0(0)

10.03. No.22839 QTY:

WALTER P. FINN LICENSE No. 22839 STATE OF FLORIDA PROFESSIONAL ENGINEER

04/13/2012

ALPINE
ITW Building Components Group Inc.
Haines City, FL 33844
FL COA #0 278

WARNING READ AND FOLLOW ALL NOTES ON THIS SHEET!
IMPORTANT FURNISH THIS DESIGN TO ALL CONTRACTORS INCLUDING INSTALLERS.

Trusses require extreme care in fabricating, handling, shipping, installing and bracing. Refer to and follow the latest edition of BCSI (Building Component Safety Information, by TPI and WTCA) for safety practices prior to performing these functions. Installers shall provide temporary bracing per BCSI. Unless noted otherwise, top chord shall have properly attached structural sheathing and bottom chord shall have a properly attached rigid ceiling. Locations shown for permanent lateral restraint of webs shall have bracing installed per BCSI sections B3, B7 or B10, as applicable.

ITW Building Components Group Inc. (ITWBCG) shall not be responsible for any deviation from this design, any failure to build the truss in conformance with ANSI/TPI 1, or for handling, shipping, installation & bracing of trusses. Apply plates to each face of truss and position as shown above and on the Joint Details, unless noted otherwise. Refer to drawings 160A-Z for standard plate positions. A seal on this drawing or cover page listing this drawing, indicates acceptance of professional engineering responsibility solely for the design shown. The suitability and use of this design for any structure is the responsibility of the Building Designer per ANSI/TPI 1 Sec.2. For more information see: This job's general notes page; ITW-BCG: www.itwbcg.com; TPI: www.tpinst.org; WTCA: www.sbcindustry.com; ICC: www.iccsafe.org

FL/-/4/-/-/R/-		Scale =.25"/Ft.
TC LL	20.0 PSF	REF R487-- 21857
TC DL	10.0 PSF	DATE 04/13/12
BC DL	10.0 PSF	DRW HCUSR487 12104030
BC LL	0.0 PSF	HC-ENG SSB/WPF
TOT.LD.	40.0 PSF	SEQN- 283139
DUR.FAC.	1.25	
SPACING	24.0"	JREF- 1UL8487_Z01

(12-077--LAKE CITY INDUSTRIES Varney Garage Add. -- 655 NW Lona Loop Lake City, - H7B 30' Stepdown Hip Girder)

Top chord 2x4 SP #1 :T2 2x4 SP M-30:
Bot chord 2x4 SP #1
Webs 2x4 SP #3

Roof overhang supports 2.00 psf soffit load.

In lieu of structural panels use purlins to brace all flat TC @ 24" OC.

Left side jacks have 7-0-0 setback with 0-0-0 cant and 1-4-0 overhang.
End jacks have 7-0-0 setback with 0-0-0 cant and 1-4-0 overhang.
Right side jacks have 7-0-0 setback with 0-0-0 cant and 1-4-0 overhang.

120 mph wind, 15.00 ft mean hgt, ASCE 7-10, CLOSED bldg, Located anywhere in roof, RISK CAT II, EXP B, wind TC DL=5.0 psf, wind BC DL=5.0 psf. GCpi(+/-)=0.18

Wind loads and reactions based on MWFRS with additional C&C member design.

#1 hip supports 7-0-0 jacks with no webs.

Deflection meets L/240 live and L/180 total load. Creep increase factor for dead load is 1.50.

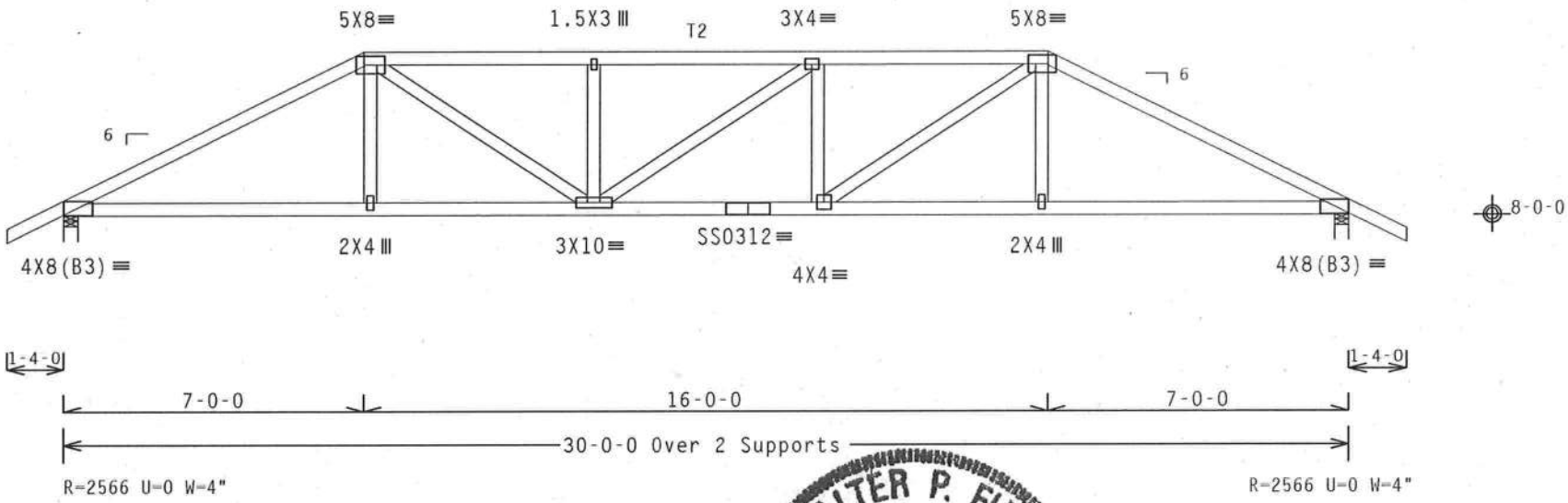

Design Crit: FBC2010Res/TPI-2007(STD)

PLT TYP. 18 Gauge HS,Wave FT/RT=10%(0%)/0(0) 10.03.11.0209.21 QTY 1 FL/-/4/-/-/R/- Scale =.25"/Ft.

ALPINE
ITW Building Components Group Inc.
Haines City, FL 33844
FL COA #0 278

WARNING READ AND FOLLOW ALL NOTES ON THIS SHEET!
IMPORTANT FURNISH THIS DESIGN TO ALL CONTRACTORS INCLUDING INSTALLERS.

Trusses require extreme care in fabricating, handling, shipping, installing and bracing. Refer to and follow the latest edition of BCSI (Building Component Safety Information, by TPI and WTCA) for safety practices prior to performing these functions. Installers shall provide temporary bracing per BCSI. Unless noted otherwise, top chord shall have properly attached structural sheathing and bottom chord shall have a properly attached rigid ceiling. Locations shown for permanent lateral restraint of webs shall have bracing installed per BCSI sections B3, B7 or B10, as applicable.

ITW Building Components Group Inc. (ITWBCG) shall not be responsible for any deviation from this design, any failure to build the truss in conformance with ANSI/TPI 1, or for handling, shipping, installing and bracing of trusses. Apply plates to each face of truss and position as shown above and on the Joint Details, unless noted otherwise. Refer to drawings 160A-Z for standard plate positions. A seal on this drawing or cover page listing this drawing, indicates acceptance of professional engineering responsibility solely for the design shown. The suitability and use of this design for any structure is the responsibility of the Building Designer per ANSI/TPI 1 Sec.2. For more information see: This job's general notes page; ITW-BCG: www.itwbcg.com; TPI: www.tpinst.org; WTCA: www.sbcindustry.com; ICC: www.iccsafe.org

WALTER P. FINN LICENSE No.22838 STATE OF FLORIDA PROFESSIONAL ENGINEER

04/13/2012

TC LL	20.0 PSF	REF	R487-- 21858
TC DL	10.0 PSF	DATE	04/13/12
BC DL	10.0 PSF	DRW	HCUSR487 12104026
BC LL	0.0 PSF	HC-ENG	SSB/WPF
TOT.LD.	40.0 PSF	SEQN-	283211
DUR.FAC.	1.25		
SPACING	24.0"	JREF-	1UL8487_Z01

THIS DWG PREPARED FROM COMPUTER INPUT (LOADS & DIMENSIONS) SUBMITTED BY TRUSS MFR.

(12-077--LAKE CITY INDUSTRIES Varney Garage Add. -- 655 NW Lona Loop Lake City, - CV 18' Common)

Top chord 2x4 SP M-30
Bot chord 2x4 SP M-30
Webs 2x4 SP #3

Roof overhang supports 2.00 psf soffit load.

Calculated horizontal deflection is 0.14" due to live load and 0.22" due to dead load.

Deflection meets L/240 live and L/180 total load. Creep increase factor for dead load is 1.50.

120 mph wind, 15.00 ft mean hgt, ASCE 7-10, CLOSED bldg, Located anywhere in roof, RISK CAT II, EXP B, wind TC DL=5.0 psf, wind BC DL=5.0 psf. GCpi(+/-)=0.18

Wind loads and reactions based on MWFRS with additional C&C member design.

Bottom chord checked for 10.00 psf non-concurrent live load.

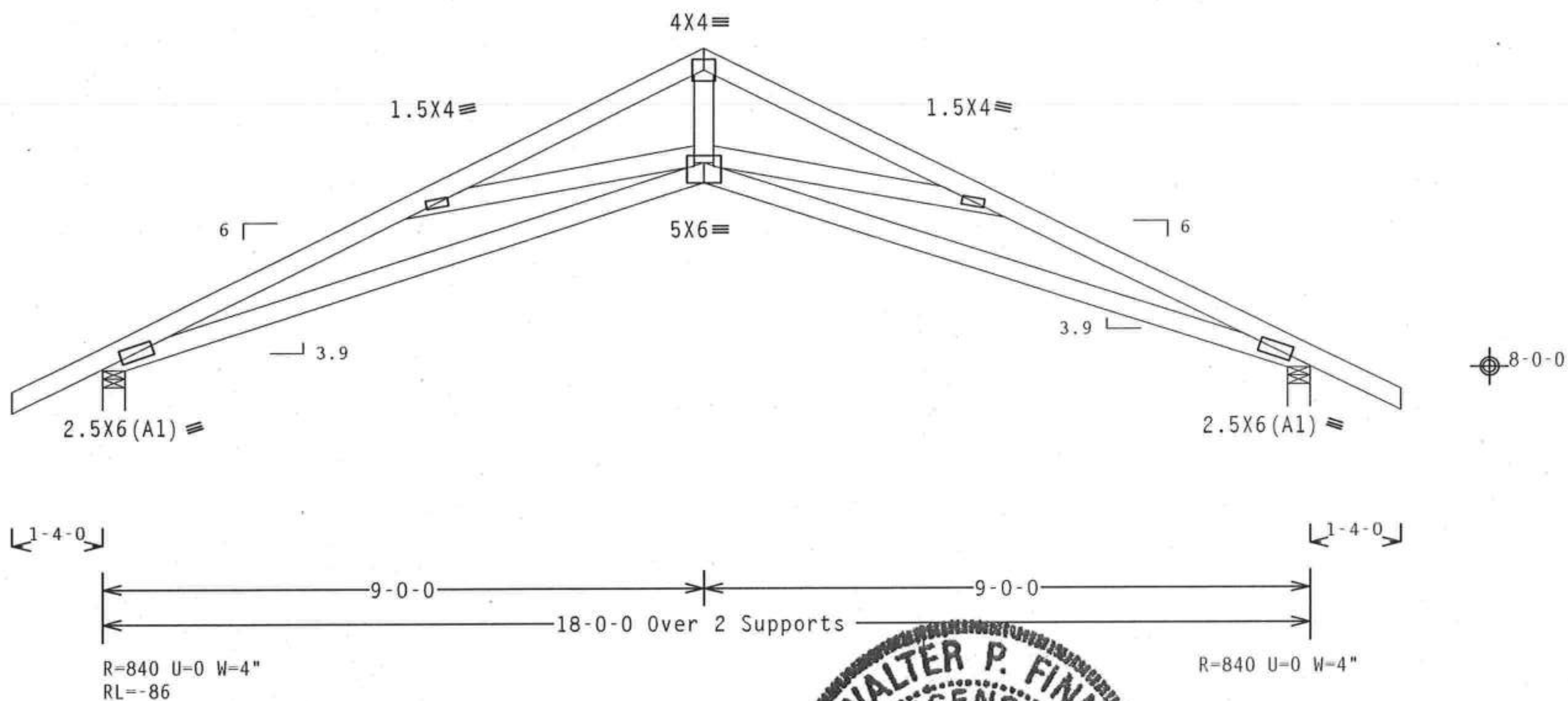

Design Crit: FBC2010Res/TPI-2007(STD)
FT/RT=10%(0%)/0(0) 10.03.

PLT TYP. Wave

QTY:

FL/-/4/-/-/R/-

Scale =.375"/Ft.

ALPINE

ITW Building Components Group Inc.
Haines City, FL 33844
FL COA #0 278

WARNING READ AND FOLLOW ALL NOTES ON THIS SHEET!
IMPORTANT FURNISH THIS DESIGN TO ALL CONTRACTORS INCLUDING INSTALLERS.

Trusses require extreme care in fabricating, handling, shipping, installing and bracing. Refer to and follow the latest edition of BCSI (Building Component Safety Information, by TPI and WTCA) for safety practices prior to performing these functions. Installers shall provide temporary bracing per BCSI. Unless noted otherwise, top chord shall have properly attached structural sheathing and bottom chord shall have a properly attached rigid ceiling. Locations shown for permanent lateral restraint of webs shall have bracing installed per BCSI sections B3, B7 or B10, as applicable.

ITW Building Components Group Inc. (ITWBCG) shall not be responsible for any deviation from this drawing, any failure to build the truss in conformance with ANSI/TPI 1, or for handling, shipping, installation & bracing of trusses. Apply plates to each face of truss and position as shown above and on the Joint Details, unless noted otherwise. Refer to drawings 160A-Z for standard plate positions. A seal on this drawing or cover page listing this drawing, indicates acceptance of professional engineering responsibility solely for the design shown. The suitability and use of this design for any structure is the responsibility of the Building Designer per ANSI/TPI 1 Sec.2. For more information see: This job's general notes page: ITW-BCG: www.itwbcg.com; TPI: www.tpinst.org; WTCA: www.sbcindustry.com; ICC: www.iccsafe.org

WALTER P. FINN
LICENSE
No. 22839
STATE OF FLORIDA
PROFESSIONAL ENGINEER

04/13/2012

TC LL	20.0	PSF
TC DL	10.0	PSF
BC DL	10.0	PSF
BC LL	0.0	PSF
TOT.LD.	40.0	PSF
DUR.FAC.	1.25	
SPACING	24.0"	

REF	R487-- 21859
DATE	04/13/12
DRW	HCUSR487 12104027
HC-ENG	SSB/WPF
SEQN-	283269
JREF-	1UL8487_Z01

(12-077--LAKE CITY INDUSTRIES Varney Garage Add. -- 655 NW Lona Loop Lake City, - CGE 18' Gable)

Top chord 2x4 SP M-30
Bot chord 2x4 SP M-30
Webs 2x4 SP #3
:Stack Chord SC1 2x4 SP M-30::Stack Chord SC2 2x4 SP M-30:

Left and right cantilevers are exposed to wind

Roof overhang supports 2.00 psf soffit load.

See DWGS A12015ENC100212, GBLLETIN0212, & GABRST100212 for more requirements.

Bottom chord checked for 10.00 psf non-concurrent live load.

Deflection meets L/240 live and L/180 total load. Creep increase factor for dead load is 1.50.

120 mph wind, 15.00 ft mean hgt, ASCE 7-10, CLOSED bldg, Located anywhere in roof, RISK CAT II, EXP B, wind TC DL=5.0 psf, wind BC DL=5.0 psf. GCpi(+/-)=0.18

Wind loads and reactions based on MWFRS with additional C&C member design.

Gable end supports 8" max rake overhang.

Stacked top chord must NOT be notched or cut in area (NNL). Dropped top chord braced at 24" o.c. intervals. Attach stacked top chord (SC) to dropped top chord in notchable area using 3x4 tie-plates 24" o.c. Center plate on stacked/dropped chord interface, plate length perpendicular to chord length. Splice top chord in notchable area using 3x6.

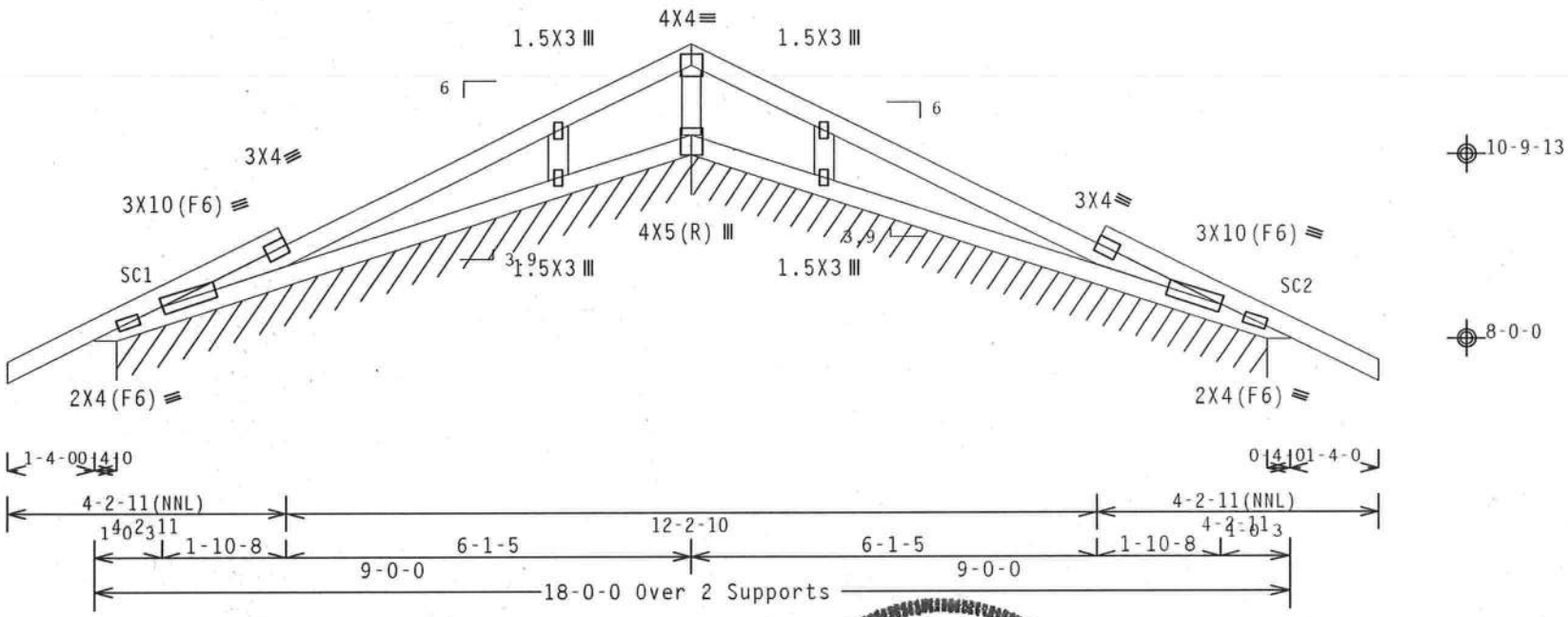

R=104 PLF U=0 PLF W=8-8-0
RL=10/-10 PLF

R=108 PLF U=4 PLF

Design Crit: FBC2010Res/TPI-2007(STD)

PLT TYP. Wave FT/RT=10%(0%)/0(0) 10.03.11.0209.21 QTY 1 FL/-/4/-/-/R/- Scale =.375"/Ft.

ALPINE
ITW Building Components Group Inc.
Haines City, FL 33844
FL COA #0 278

WARNING READ AND FOLLOW ALL NOTES ON THIS SHEET!
IMPORTANT FURNISH THIS DESIGN TO ALL CONTRACTORS INCLUDING INSTALLERS.

Trusses require extreme care in fabricating, handling, shipping, installing and bracing. Refer to and follow the latest edition of BCSI (Building Component Safety Information, by TPI and WTCA) for safety practices prior to performing these functions. Installers shall provide temporary bracing per BCSI. Unless noted otherwise, top chord shall have properly attached structural sheathing and bottom chord shall have a properly attached rigid ceiling. Locations shown for permanent lateral restraint of webs shall have bracing installed per BCSI sections B3, B7 or B10, as applicable.

ITW Building Components Group Inc. (ITWBCG) shall not be responsible for any deviation from this design, any failure to build the truss in conformance with ANSI/TPI 1, or for handling, shipping, installing and bracing of trusses. Apply plates to each face of truss and position as shown above and on the Joint Details, unless noted otherwise. Refer to drawings 160A-Z for standard plate positions. A seal on this drawing or cover page listing this drawing, indicates acceptance of professional engineering responsibility solely for the design shown. The suitability and use of this design for any structure is the responsibility of the Building Designer per ANSI/TPI 1 Sec.2. For more information see: This job's general notes page; ITW-BCG: www.itwbcg.com; TPI: www.tpinst.org; WTCA: www.sbcindustry.com; ICC: www.iccsafe.org

WALTER P. FINN LICENSE No.22839 STATE OF FLORIDA PROFESSIONAL ENGINEER

04/13/2012

TC LL	20.0 PSF	REF	R487-- 21860
TC DL	10.0 PSF	DATE	04/13/12
BC DL	10.0 PSF	DRW	HCUSR487 12104028
BC LL	0.0 PSF	HC-ENG	SSB/WPF
TOT.LD.	40.0 PSF	SEQN-	283295
DUR.FAC.	1.25		
SPACING	24.0"	JREF-	1UL8487_Z01

(12-077--LAKE CITY INDUSTRIES Varney Garage Add. -- 655 NW Lona Loop Lake City, - D 8' Common)

Top chord 2x4 SP M-30
Bot chord 2x4 SP M-30

Roof overhang supports 2.00 psf soffit load.

Bottom chord checked for 10.00 psf non-concurrent live load.

Deflection meets L/240 live and L/180 total load. Creep increase factor for dead load is 1.50.

120 mph wind, 15.00 ft mean hgt, ASCE 7-10, CLOSED bldg, Located anywhere in roof, RISK CAT II, EXP B, wind TC DL=5.0 psf, wind BC DL=5.0 psf. GCpi(+/-)=0.18

Wind loads and reactions based on MWFRS with additional C&C member design.

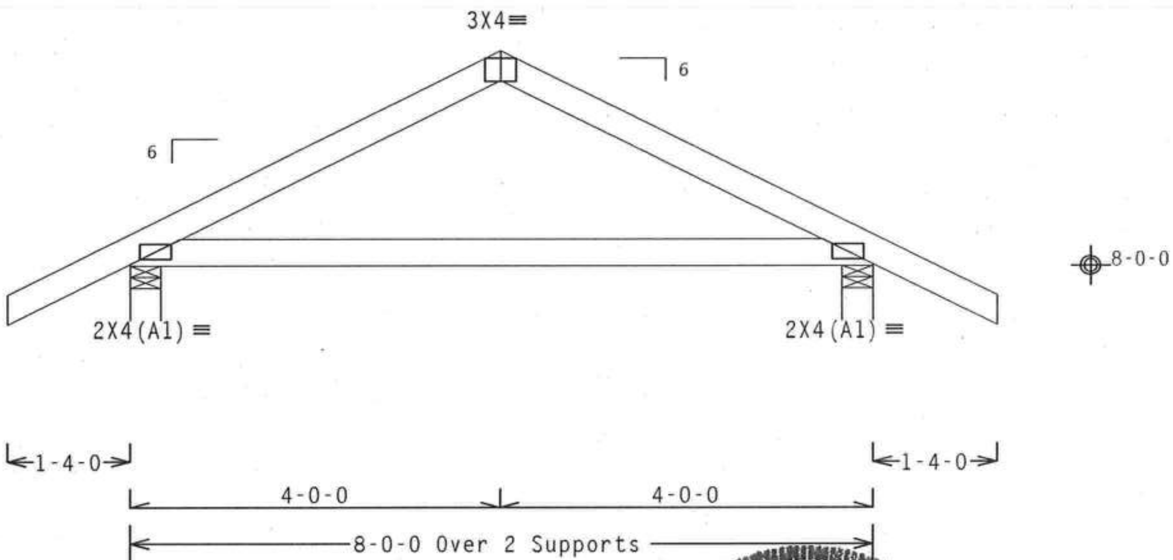

R=419 U=3 W=4"
RL=-49

Design Crit: FBC2010Res/TPI-2007(STD)
FT/RT=10%(0%)/0(0) 10.03.11.0209.01 QTY 10 FL/-/4/-/-/R/-

PLT TYP. Wave

Scale =.5"/Ft.

ALPINE
ITW Building Components Group Inc.
Haines City, FL 33844
FL COA #0 278

WARNING READ AND FOLLOW ALL NOTES ON THIS SHEET!
IMPORTANT FURNISH THIS DESIGN TO ALL CONTRACTORS INCLUDING INSTALLERS.

Trusses require extreme care in fabricating, handling, shipping, installing and bracing. Refer to and follow the latest edition of BCSI (Building Component Safety Information, by TPI and WTCA) for safety practices prior to performing these functions. Installers shall provide temporary bracing per BCSI. Unless noted otherwise, top chord shall have properly attached structural sheathing and bottom chord shall have a properly attached rigid ceiling. Locations shown for permanent lateral restraint of webs shall have bracing installed per BCSI sections B3, B7 or B10, as applicable.

ITW Building Components Group Inc. (ITWBCG) shall not be responsible for any deviation from this design, any failure to build the truss in conformance with ANSI/TPI 1, or for handling, shipping, installation & bracing of trusses. Apply plates to each face of truss and position as shown above and on the Joint Details, unless noted otherwise. Refer to drawings 160A-Z for standard plate positions. A seal on this drawing or cover page listing this drawing, indicates acceptance of professional engineering responsibility solely for the design shown. The suitability and use of this design for any structure is the responsibility of the Building Designer per ANSI/TPI 1 Sec.2. For more information see: This job's general notes page; ITW-BCG: www.itwbcg.com; TPI: www.tpinst.org; WTCA: www.sbcindustry.com; ICC: www.iccsafe.org

WALTER P. FINN LICENSE No. 22839 STATE OF FLORIDA PROFESSIONAL ENGINEER
04/13/2012

TC LL	20.0 PSF	REF	R487-- 21861
TC DL	10.0 PSF	DATE	04/13/12
BC DL	10.0 PSF	DRW	HCUSR487 12104011
BC LL	0.0 PSF	HC-ENG	SSB/WPF
TOT.LD.	40.0 PSF	SEQN-	283298
DUR.FAC.	1.25		
SPACING	24.0"	JREF-	1UL8487_Z01

THIS DWG PREPARED FROM COMPUTER INPUT (LOADS & DIMENSIONS) SUBMITTED BY TRUSS MFR.

(12-077--LAKE CITY INDUSTRIES Varney Garage Add. -- 655 NW Lona Loop Lake City, - DG 8' Common Girder)

Top chord 2x4 SP #1
Bot chord 2x6 SP M-26
Webs 2x4 SP #3

120 mph wind, 15.00 ft mean hgt, ASCE 7-10, CLOSED bldg, Located anywhere in roof, RISK CAT II, EXP B, wind TC DL=5.0 psf, wind BC DL=5.0 psf. GCpi(+/-)=0.18

Wind loads and reactions based on MWFRS with additional C&C member design.

Special loads
------(Lumber Dur.Fac.=1.25 / Plate Dur.Fac.=1.25)
TC- From 62 plf at 0.00 to 62 plf at 4.00
TC- From 62 plf at 4.00 to 62 plf at 8.00
BC- From 10 plf at 0.00 to 10 plf at 8.00
BC- 1247.54 lb Conc. Load at 1.44, 3.44, 5.44, 7.44

Bottom chord checked for 10.00 psf non-concurrent live load.

Deflection meets L/240 live and L/180 total load. Creep increase factor for dead load is 1.50.

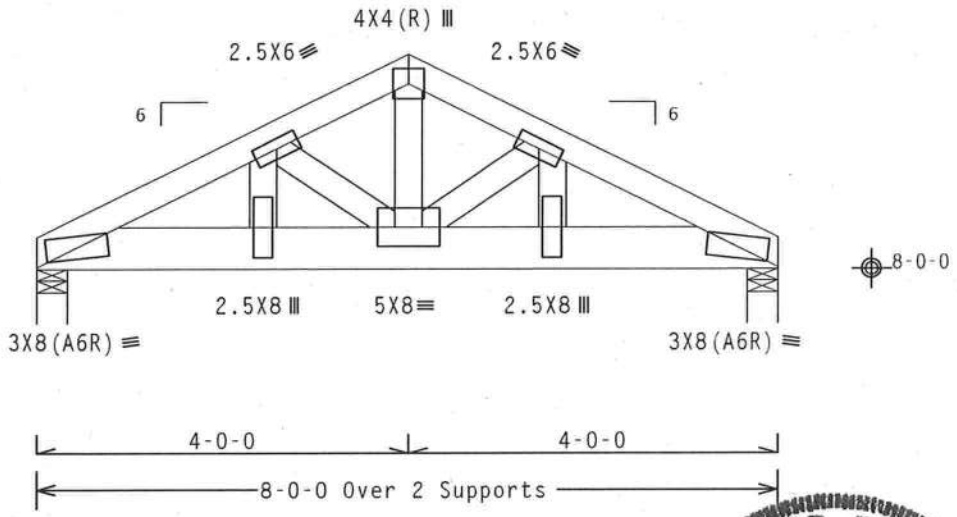

Design Crit: FBC2010Res/TPI-2007(STD)

PLT TYP. Wave FT/RT=10%(0%)/0(0) 10.03.11.0309.21 QTY 1 FL/-/4/-/-/R/- Scale =.5"/Ft.

ALPINE
ITW Building Components Group Inc.
Haines City, FL 33844
FL COA #0 278

WARNING READ AND FOLLOW ALL NOTES ON THIS SHEET!
IMPORTANT FURNISH THIS DESIGN TO ALL CONTRACTORS INCLUDING INSTALLERS.

Trusses require extreme care in fabricating, handling, shipping, installing and bracing. Refer to and follow the latest edition of BCSI (Building Component Safety Information, by TPI and WTCA) for safety practices prior to performing these functions. Installers shall provide temporary bracing per BCSI. Unless noted otherwise, top chord shall have properly attached structural sheathing and bottom chord shall have a properly attached rigid ceiling. Locations shown for permanent lateral restraint of webs shall have bracing installed per BCSI sections B3, B7 or B10, as applicable.

ITW Building Components Group Inc. (ITWBCG) shall not be responsible for any deviation from this design, any failure to build the truss in conformance with ANSI/TPI 1, or for handling, shipping, installing and bracing of trusses. Apply plates to each face of truss and position as shown above and on the Joint Details, unless noted otherwise. Refer to drawings 160A-Z for standard plate positions. A seal on drawing or cover page listing this drawing, indicates acceptance of professional engineering responsibility solely for the design shown. The suitability and use of this design for any structure is the responsibility of the Building Designer per ANSI/TPI 1 Sec.2. For more information see: this job's general notes page; ITW-BCG: www.itwbcg.com; TPI: www.tpinst.org; WTCA: www.sbcindustry.com; ICC: www.iccsafe.org

WALTER P. FINN LICENSE No.22839 STATE OF FLORIDA PROFESSIONAL ENGINEER
04/13/2012

TC LL	20.0 PSF	REF	R487-- 21862
TC DL	10.0 PSF	DATE	04/13/12
BC DL	10.0 PSF	DRW	HCUSR487 12104012
BC LL	0.0 PSF	HC-ENG	SSB/WPF
TOT.LD.	40.0 PSF	SEQN-	283292
DUR.FAC.	1.25		
SPACING	24.0"	JREF-	1UL8487_Z01

(12-077--LAKE CITY INDUSTRIES Varney Garage Add. -- 655 NW Lona Loop Lake City, - EJ7 7' End Jack)

Top chord 2x4 SP M-30
Bot chord 2x4 SP M-30

Roof overhang supports 2.00 psf soffit load.

Bottom chord checked for 10.00 psf non-concurrent live load.

Deflection meets L/240 live and L/180 total load. Creep increase factor for dead load is 1.50.

120 mph wind, 15.00 ft mean hgt, ASCE 7-10, CLOSED bldg, not located within 4.50 ft from roof edge, RISK CAT II, EXP B, wind TC DL=5.0 psf, wind BC DL=5.0 psf. GCpi(+/-)=0.18

Wind loads and reactions based on MWFRS with additional C&C member design.

Provide (2) 16d common nails(0.162"x3.5"), toe nailed at Top chord.
Provide (2) 16d common nails(0.162"x3.5"), toe nailed at Bot chord.

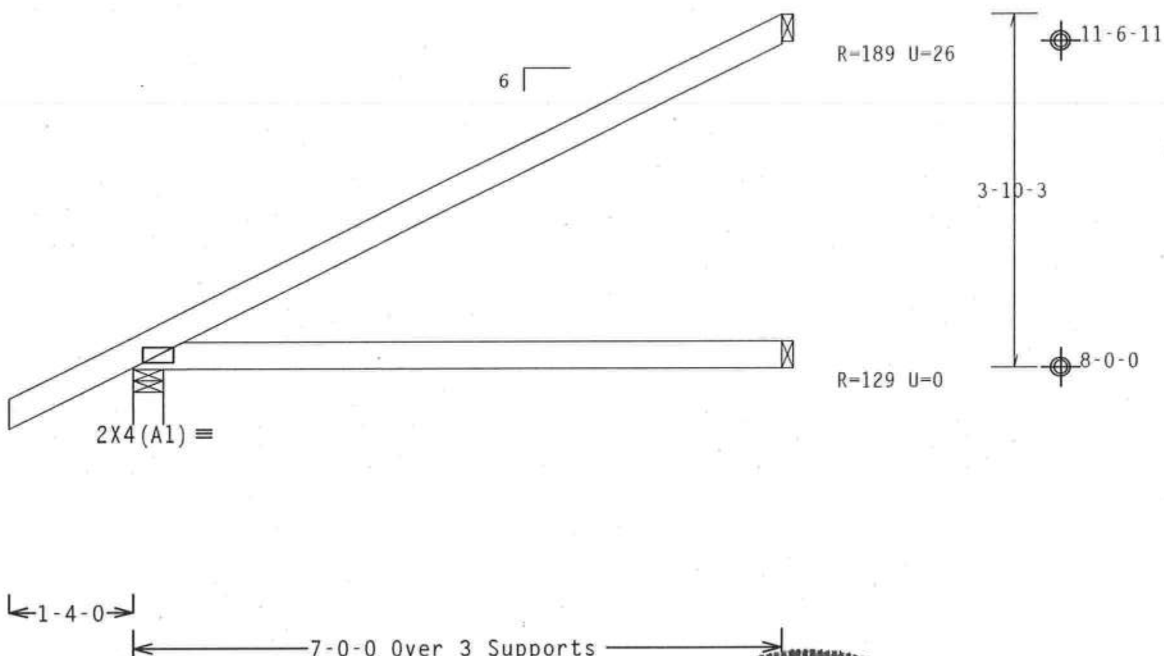

Design Crit: FBC2010Res/TPI-2007(STD)
FT/RT=10%(0%)/0(0)

PLT TYP. Wave

10.03.11.0209.01 QTY:9 FL/-/4/-/-/R/- Scale =.5"/Ft.

TC LL	20.0 PSF	REF R487-- 21863
TC DL	10.0 PSF	DATE 04/13/12
BC DL	10.0 PSF	DRW HCUSR487 12104013
BC LL	0.0 PSF	HC-ENG SSB/WPF
TOT.LD.	40.0 PSF	SEQN- 283202
DUR.FAC.	1.25	
SPACING	24.0"	JREF- 1UL8487_Z01

WARNING READ AND FOLLOW ALL NOTES ON THIS SHEET!
IMPORTANT FURNISH THIS DESIGN TO ALL CONTRACTORS INCLUDING INSTALLERS.

Trusses require extreme care in fabricating, handling, shipping, installing and bracing. Refer to and follow the latest edition of BCSI (Building Component Safety Information, by TPI and WTCA) for safety practices prior to performing these functions. Installers shall provide temporary bracing per BCSI. Unless noted otherwise, top chord shall have properly attached structural sheathing and bottom chord shall have a properly attached rigid ceiling. Locations shown for permanent lateral restraint of webs shall have bracing installed per BCSI sections B3, B7 or B10, as applicable.

ITW Building Components Group Inc. (ITWBCG) shall not be responsible for any deviation from this drawing, any failure to build the truss in conformance with ANSI/TPI 1, or for handling, shipping, installation & bracing of trusses. Apply plates to each face of truss and position as shown above and on the Joint Details, unless noted otherwise. Refer to drawings 160A-Z for standard plate positions. A seal on this drawing or cover page listing this drawing, indicates acceptance of professional engineering responsibility solely for the design shown. The suitability and use of this design for any structure is the responsibility of the Building Designer per ANSI/TPI 1 Sec.2. For more information see: This job's general notes page; ITW-BCG: www.itwbcg.com; TPI: www.tpinst.org; WTCA: www.sbcindustry.com; ICC: www.iccsafe.org

ALPINE
ITW Building Components Group Inc.
Haines City, FL 33844
FL COA #0 278

WALTER P. FINN
LICENSE
No. 22839
STATE OF FLORIDA
PROFESSIONAL ENGINEER

04/13/2012

THIS DWG PREPARED FROM COMPUTER INPUT (LOADS & DIMENSIONS) SUBMITTED BY TRUSS MFR.

(12-077--LAKE CITY INDUSTRIES Varney Garage Add. -- 655 NW Lona Loop Lake City, - CJ1 1' Jack)

Top chord 2x4 SP M-30
Bot chord 2x4 SP M-30

Roof overhang supports 2.00 psf soffit load.

Bottom chord checked for 10.00 psf non-concurrent live load.

Deflection meets L/240 live and L/180 total load. Creep increase factor for dead load is 1.50.

120 mph wind, 15.00 ft mean hgt, ASCE 7-10, CLOSED bldg, Located anywhere in roof, RISK CAT II, EXP B, wind TC DL=5.0 psf, wind BC DL=5.0 psf. GCpi(+/-)=0.18

Wind loads and reactions based on MWFRS with additional C&C member design.

Provide (2) 16d common nails(0.162"x3.5"), toe nailed at Top chord.
Provide (2) 16d common nails(0.162"x3.5"), toe nailed at Bot chord.

R=-41 Rw=13 U=30

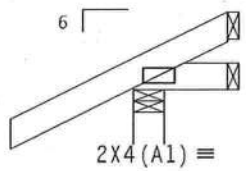

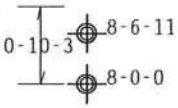

R=7 Rw=9 U=7

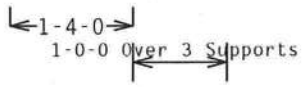

R=222 U=17 W=4"

Design Crit: FBC2010Res/TPI-2007(STD)
PLT TYP. Wave FT/RT=10%(0%)/0(0) 10/03.1 QTY: FL/-/4/-/-/R/- Scale =.5"/Ft.

ALPINE
ITW Building Components Group Inc.
Haines City, FL 33844
FL COA #0 278

WARNING READ AND FOLLOW ALL NOTES ON THIS SHEET!
IMPORTANT FURNISH THIS DESIGN TO ALL CONTRACTORS INCLUDING INSTALLERS.

Trusses require extreme care in fabricating, handling, shipping, installing and bracing. Refer to and follow the latest edition of BCSI (Building Component Safety Information, by TPI and WTCA) for safety practices prior to performing these functions. Installers shall provide temporary bracing per BCSI. Unless noted otherwise, top chord shall have properly attached structural sheathing and bottom chord shall have a properly attached rigid ceiling. Locations shown for permanent lateral restraint of webs shall have bracing installed per BCSI sections B3, B7 or B10, as applicable.

ITW Building Components Group Inc. (ITWBCG) shall not be responsible for any deviation from this design, any failure to build the truss in conformance with ANSI/TPI 1, or for handling, shipping, installation and bracing of trusses. Apply plates to each face of truss and position as shown above and on the Joint Details, unless noted otherwise. Refer to drawings 160A-2 for standard plate positions. A seal on this drawing or cover page listing this drawing, indicates acceptance of professional engineering responsibility solely for the design shown. The suitability and use of this design for any structure is the responsibility of the Building Designer per ANSI/TPI 1 Sec.2. For more information see: This job's general notes page; ITW-BCG: www.itwbcg.com; TPI: www.tpinst.org; WTCA: www.sbcindustry.com; ICC: www.iccsafe.org

WALTER P. FINN LICENSE No.22839 STATE OF FLORIDA PROFESSIONAL ENGINEER
04/13/2012

TC LL	20.0 PSF	REF	R487-- 21864
TC DL	10.0 PSF	DATE	04/13/12
BC DL	10.0 PSF	DRW	HCUSR487 12104014
BC LL	0.0 PSF	HC-ENG	SSB/WPF
TOT.LD.	40.0 PSF	SEQN-	283190
DUR.FAC.	1.25		
SPACING	24.0"	JREF-	1UL8487_Z01

THIS DWG PREPARED FROM COMPUTER INPUT (LOADS & DIMENSIONS) SUBMITTED BY TRUSS MFR.

(12-077--LAKE CITY INDUSTRIES Varney Garage Add. -- 655 NW Lona Loop Lake City, - CJ3 3' Jack)

Top chord 2x4 SP M-30
Bot chord 2x4 SP M-30

Roof overhang supports 2.00 psf soffit load.

Bottom chord checked for 10.00 psf non-concurrent live load.

Deflection meets L/240 live and L/180 total load. Creep increase factor for dead load is 1.50.

120 mph wind, 15.00 ft mean hgt, ASCE 7-10, CLOSED bldg, Located anywhere in roof, RISK CAT II, EXP B, wind TC DL=5.0 psf, wind BC DL=5.0 psf. GCpi(+/-)=0.18

Wind loads and reactions based on MWFRS with additional C&C member design.

Provide (2) 16d common nails(0.162"x3.5"), toe nailed at Top chord.
Provide (2) 16d common nails(0.162"x3.5"), toe nailed at Bot chord.

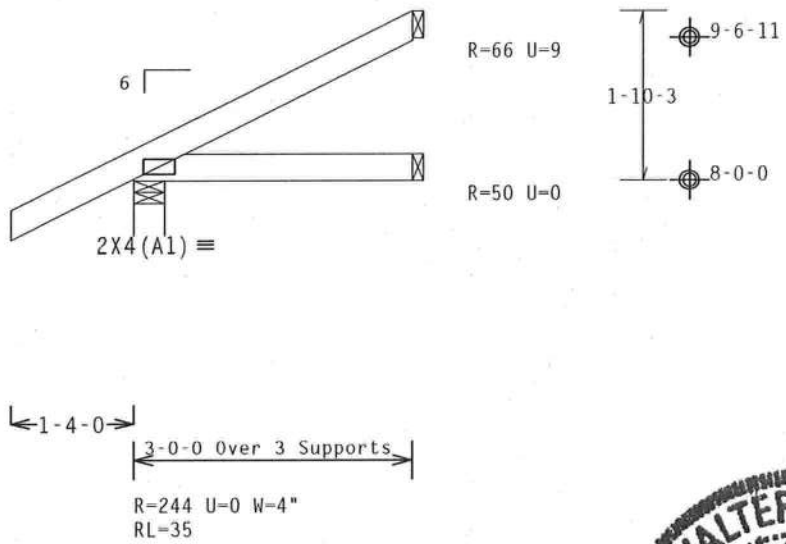

Design Crit: FBC2010Res/TPI-2007(STD) 10 03 11 0209 21 QTY 4 FL/-/4/-/-/R/- Scale =.5"/Ft.

PLT TYP. Wave

ALPINE
ITW Building Components Group Inc.
Haines City, FL 33844
FL COA #0 278

WARNING READ AND FOLLOW ALL NOTES ON THIS SHEET!
IMPORTANT FURNISH THIS DESIGN TO ALL CONTRACTORS INCLUDING INSTALLERS.

Trusses require extreme care in fabricating, handling, shipping, installing and bracing. Refer to and follow the latest edition of BCSI (Building Component Safety Information, by TPI and WTCA) for safety practices prior to performing these functions. Installers shall provide temporary bracing per BCSI. Unless noted otherwise, top chord shall have properly attached structural sheathing and bottom chord shall have a properly attached rigid ceiling. Locations shown for permanent lateral restraint of webs shall have bracing installed per BCSI sections B3, B7 or B10, as applicable.

ITW Building Components Group Inc. (ITWBCG) shall not be responsible for any deviation from this design, any failure to build the truss in conformance with ANSI/TPI 1, or for handling, shipping, installing and bracing of trusses. Apply plates to each face of truss and position as shown above and on the Joint Details, unless noted otherwise. Refer to drawings 160A-Z for standard plate positions. A seal on this drawing or cover page listing this drawing, indicates acceptance of professional engineering responsibility solely for the design shown. The suitability and use of this design for any structure is the responsibility of the Building Designer per ANSI/TPI 1 Sec.2. For more information see: This job's general notes page; ITW-BCG: www.itwbcg.com; TPI: www.tpinst.org; WTCA: www.sbcindustry.com; ICC: www.iccsafe.org

WALTER P. FINN LICENSE No.22839 STATE OF FLORIDA PROFESSIONAL ENGINEER
04/13/2012

TC LL	20.0 PSF	REF	R487-- 21865
TC DL	10.0 PSF	DATE	04/13/12
BC DL	10.0 PSF	DRW	HCUSR487 12104015
BC LL	0.0 PSF	HC-ENG	SSB/WPF
TOT.LD.	40.0 PSF	SEQN-	283193
DUR.FAC.	1.25		
SPACING	24.0"	JREF-	1UL8487_Z01

THIS DWG PREPARED FROM COMPUTER INPUT (LOADS & DIMENSIONS) SUBMITTED BY TRUSS MFR.

(12-077--LAKE CITY INDUSTRIES Varney Garage Add. -- 655 NW Lona Loop Lake City, - CJ5 5' Jack)

Top chord 2x4 SP M-30
Bot chord 2x4 SP M-30

Roof overhang supports 2.00 psf soffit load.

Bottom chord checked for 10.00 psf non-concurrent live load.

Deflection meets L/240 live and L/180 total load. Creep increase factor for dead load is 1.50.

120 mph wind, 15.00 ft mean hgt, ASCE 7-10, CLOSED bldg, not located within 4.50 ft from roof edge, RISK CAT II, EXP B, wind TC DL=5.0 psf, wind BC DL=5.0 psf. GCpi(+/-)=0.18

Wind loads and reactions based on MWFRS with additional C&C member design.

Provide (2) 16d common nails(0.162"x3.5"), toe nailed at Top chord.
Provide (2) 16d common nails(0.162"x3.5"), toe nailed at Bot chord.

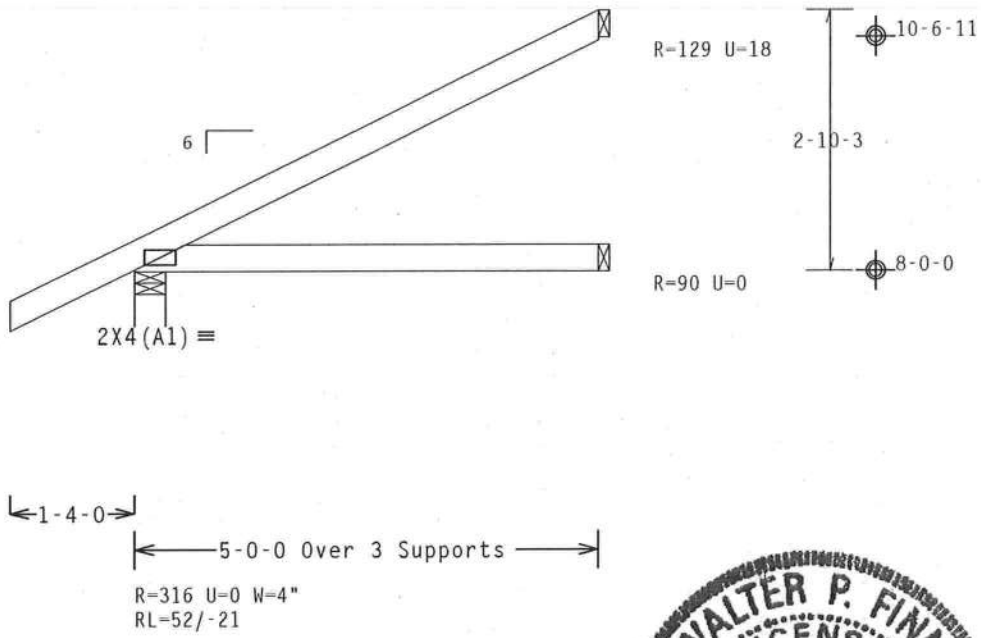

Design Crit: FBC2010Res/TPI-2007(STD
FT/RT=10%(0%)/0(0)

PLT TYP. Wave

10.03.11 0800.01 QTY 4

FL/-/4/-/-/R/-

Scale =.5"/Ft.

ALPINE
ITW Building Components Group Inc.
Haines City, FL 33844
FL COA #0 278

WARNING READ AND FOLLOW ALL NOTES ON THIS SHEET!
IMPORTANT FURNISH THIS DESIGN TO ALL CONTRACTORS INCLUDING INSTALLERS.

Trusses require extreme care in fabricating, handling, shipping, installing and bracing. Refer to and follow the latest edition of BCSI (Building Component Safety Information, by TPI and WTCA) for safety practices prior to performing these functions. Installers shall provide temporary bracing per BCSI. Unless noted otherwise, top chord shall have properly attached structural sheathing and bottom chord shall have a properly attached rigid ceiling. Locations shown for permanent lateral restraint of webs shall have bracing installed per BCSI sections B3, B7 or B10, as applicable.

ITW Building Components Group Inc. (ITWBCG) shall not be responsible for any deviation from this design, any failure to build the truss in conformance with ANSI/TPI 1, or for handling, shipping, installing and bracing of trusses. Apply plates to each face of truss and position as shown above and on the Joint Details, unless noted otherwise. Refer to drawings 160A-Z for standard plate positions. A seal on this drawing or cover page listing this drawing, indicates acceptance of professional engineering responsibility solely for the design shown. The suitability and use of this design for any structure is the responsibility of the Building Designer per ANSI/TPI 1 Sec.2. For more information see: This job's general notes page; ITW-BCG: www.itwbcg.com; TPI: www.tpinst.org; WTCA: www.sbcindustry.com; ICC: www.iccsafe.org

WALTER P. FINN LICENSE No.22839 STATE OF FLORIDA PROFESSIONAL ENGINEER

04/13/2012

TC LL	20.0 PSF	REF R487-- 21866
TC DL	10.0 PSF	DATE 04/13/12
BC DL	10.0 PSF	DRW HCUSR487 12104016
BC LL	0.0 PSF	HC-ENG SSB/WPF
TOT.LD.	40.0 PSF	SEQN- 283205
DUR.FAC.	1.25	
SPACING	24.0"	JREF- 1UL8487_Z01

THIS DWG PREPARED FROM COMPUTER INPUT (LOADS & DIMENSIONS) SUBMITTED BY TRUSS MFR.

(12-077--LAKE CITY INDUSTRIES Varney Garage Add. -- 655 NW Lona Loop Lake City, - HJ7 9'10"13 Hip Jack Girder)

Top chord 2x4 SP M-30
Bot chord 2x4 SP M-30
Webs 2x4 SP #3

Hipjack supports 7-0-0 setback jacks with no webs.

Deflection meets L/240 live and L/180.total load. Creep increase factor for dead load is 1.50.

120 mph wind, 15.00 ft mean hgt, ASCE 7-10, CLOSED bldg, Located anywhere in roof, RISK CAT II, EXP B, wind TC DL=5.0 psf, wind BC DL=5.0 psf. GCpi(+/-)=0.18

Wind loads and reactions based on MWFRS with additional C&C member design.

Provide (2) 16d common nails(0.162"x3.5"), toe nailed at Top chord.
Provide (3) 16d common nails(0.162"x3.5"), toe nailed at Bot chord.

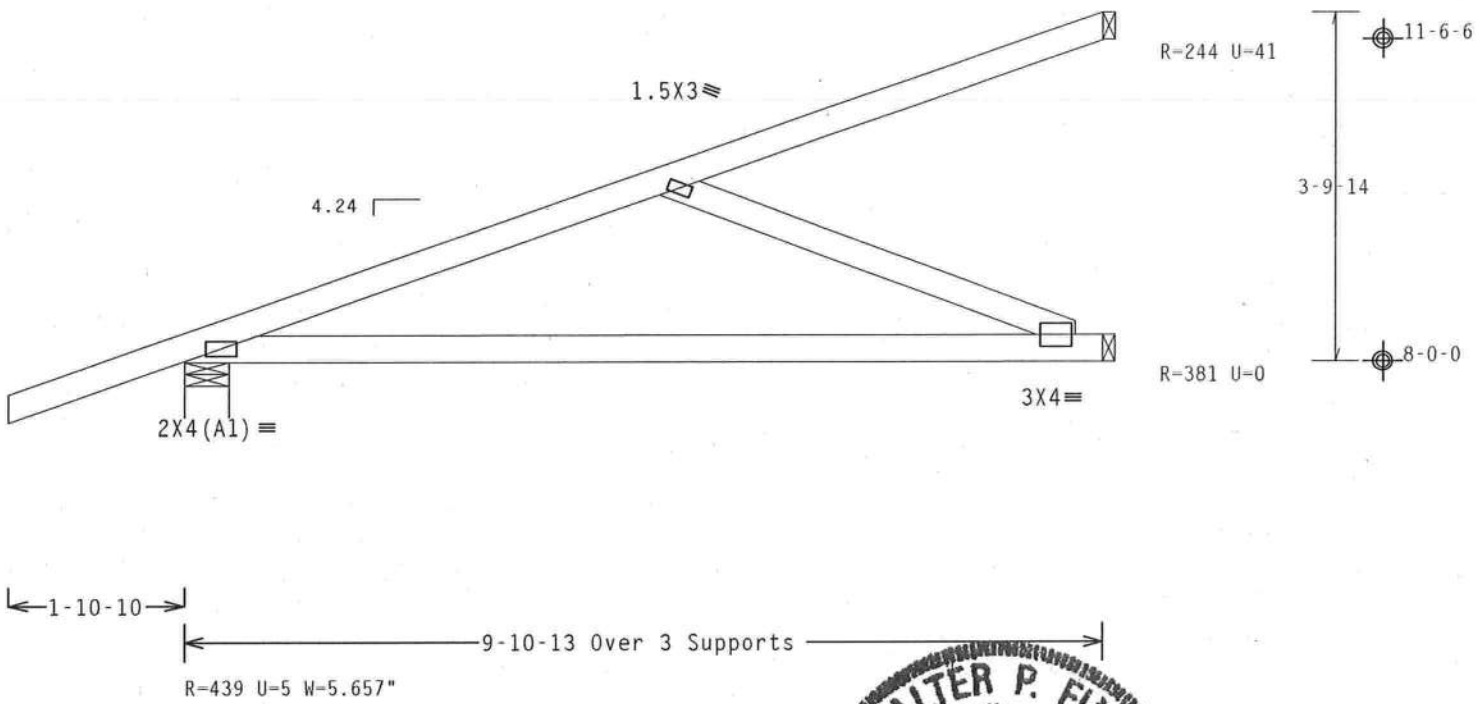

Design Crit: FBC2010Res/TPI-2007(STD)
PLT TYP. Wave FT/RT=10%(0%)/0(0) 10/03/2012 QTY: FL/-/4/-/-/R/- Scale =.5"/Ft.

ALPINE
ITW Building Components Group Inc.
Haines City, FL 33844
FL COA #0 278

WARNING READ AND FOLLOW ALL NOTES ON THIS SHEET!
IMPORTANT FURNISH THIS DESIGN TO ALL CONTRACTORS INCLUDING INSTALLERS.

Trusses require extreme care in fabricating, handling, shipping, installing and bracing. Refer to and follow the latest edition of BCSI (Building Component Safety Information, by TPI and WTCA) for safety practices prior to performing these functions. Installers shall provide temporary bracing per BCSI. Unless noted otherwise, top chord shall have properly attached structural sheathing and bottom chord shall have a properly attached rigid ceiling. Locations shown for permanent lateral restraint of webs shall have bracing installed per BCSI sections B3, B7 or B10, as applicable.

ITW Building Components Group Inc. (ITWBCG) shall not be responsible for any deviation from this design, any failure to build the truss in conformance with ANSI/TPI 1, or for handling, shipping, installing and bracing of trusses. Apply plates to each face of truss and position as shown above and on the Joint Details, unless noted otherwise. Refer to drawings 160A-2 for standard plate positions. A seal on this drawing or cover page listing this drawing, indicates acceptance of professional engineering responsibility solely for the design shown. The suitability and use of this design for any structure is the responsibility of the Building Designer per ANSI/TPI 1 Sec.2. For more information see: This job's general notes page; ITW-BCG: www.itwbcg.com; TPI: www.tpinst.org; WTCA: www.sbcindustry.com; ICC: www.iccsafe.org

WALTER P. FINN LICENSE No.22830 STATE OF FLORIDA PROFESSIONAL ENGINEER

04/13/2012

TC LL	20.0 PSF	REF R487-- 21867
TC DL	10.0 PSF	DATE 04/13/12
BC DL	10.0 PSF	DRW HCUSR487 12104017
BC LL	0.0 PSF	HC-ENG SSB/WPF
TOT.LD.	40.0 PSF	SEQN- 283199
DUR.FAC.	1.25	
SPACING	24.0"	JREF- 1UL8487_Z01

(12-077--LAKE CITY INDUSTRIES Varney Garage Add. -- 655 NW Lona Loop Lake City, - V1 27'5"12 Valley)

Top chord 2x4 SP M-30
Bot chord 2x4 SP M-30
Webs 2x4 SP #3

Bottom chord checked for 10.00 psf non-concurrent live load.

Deflection meets L/240 live and L/180 total load. Creep increase factor for dead load is 1.50.

MWFRS loads based on trusses located at least 15.00 ft. from roof edge.

120 mph wind, 15.00 ft mean hgt, ASCE 7-10, CLOSED bldg, not located within 9.00 ft from roof edge, RISK CAT II, EXP B, wind TC DL=5.0 psf, wind BC DL=5.0 psf. GCpi(+/-)=0.18

Wind loads and reactions based on MWFRS with additional C&C member design.

See DWG VAL160100212 for valley details.

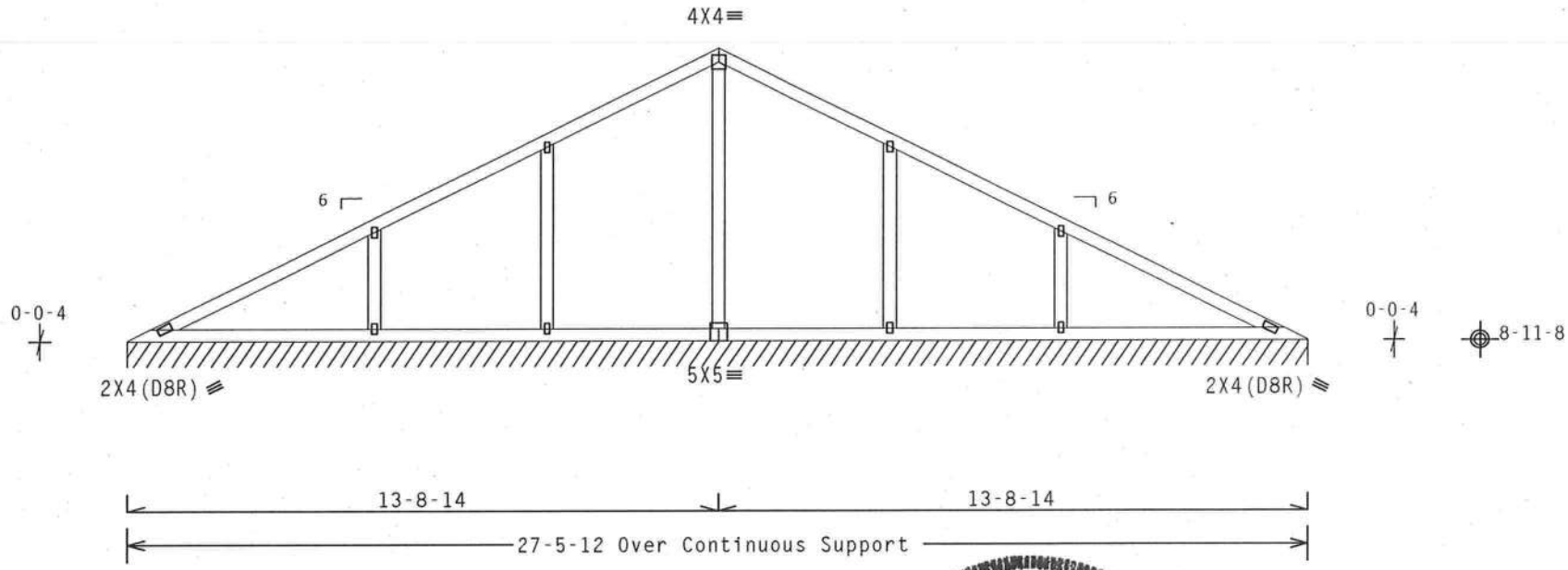

R=82 PLF U=0 PLF W=27-5-12
RL=3/-3 PLF

Note: All Plates Are 1.5X3 Except As Shown.

Design Crit: FBC2010Res/TPI-2007(STD)

PLT TYP. Wave FT/RT=10%(0%)/0(0) 10.03.11.0209.21 QTY 1 FL/-/4/-/-/R/- Scale =.25"/Ft.

WALTER P. FINN LICENSE No. 22839 STATE OF FLORIDA PROFESSIONAL ENGINEER 04/13/2012

ALPINE
ITW Building Components Group Inc.
Haines City, FL 33844
FL COA #0 278

WARNING READ AND FOLLOW ALL NOTES ON THIS SHEET!
IMPORTANT FURNISH THIS DESIGN TO ALL CONTRACTORS INCLUDING INSTALLERS.

Trusses require extreme care in fabricating, handling, shipping, installing and bracing. Refer to and follow the latest edition of BCSI (Building Component Safety Information, by TPI and WTCA) for safety practices prior to performing these functions. Installers shall provide temporary bracing per BCSI. Unless noted otherwise, top chord shall have properly attached structural sheathing and bottom chord shall have a properly attached rigid ceiling. Locations shown for permanent lateral restraint of webs shall have bracing installed per BCSI sections B3, B7 or B10, as applicable.

ITW Building Components Group Inc. (ITWBCG) shall not be responsible for any deviation from this design, any failure to build the truss in conformance with ANSI/TPI 1, or for handling, shipping, installing and bracing of trusses. Apply plates to each face of truss and position as shown above and on the Joint Details, unless noted otherwise. Refer to drawings 160A-Z for standard plate positions. A seal on this drawing or cover page listing this drawing, indicates acceptance of professional engineering responsibility solely for the design shown. The suitability and use of this design for any structure is the responsibility of the Building Designer per ANSI/TPI 1 Sec.2. For more information see: This job's general notes page; ITW-BCG: www.itwbcg.com; TPI: www.tpinst.org; WTCA: www.sbcindustry.com; ICC: www.iccsafe.org

TC LL	20.0 PSF	REF R487-- 21868
TC DL	10.0 PSF	DATE 04/13/12
BC DL	10.0 PSF	DRW HCUSR487 12104018
BC LL	0.0 PSF	HC-ENG SSB/WPF
TOT.LD.	40.0 PSF	SEQN- 283144
DUR.FAC.	1.25	
SPACING	24.0"	JREF- 1UL8487_Z01

THIS DWG PREPARED FROM COMPUTER INPUT (LOADS & DIMENSIONS) SUBMITTED BY TRUSS MFR.

(12-077--LAKE CITY INDUSTRIES Varney Garage Add. -- 655 NW Lona Loop Lake City, - V2 23'8"12 Valley)

Top chord 2x4 SP M-30
Bot chord 2x4 SP M-30
Webs 2x4 SP #3

Bottom chord checked for 10.00 psf non-concurrent live load.

Deflection meets L/240 live and L/180 total load. Creep increase factor for dead load is 1.50.

MWFRS loads based on trusses located at least 15.00 ft. from roof edge.

120 mph wind, 15.00 ft mean hgt, ASCE 7-10, CLOSED bldg, not located within 9.00 ft from roof edge, RISK CAT II, EXP B, wind TC DL=5.0 psf, wind BC DL=5.0 psf. GCpi(+/-)=0.18

Wind loads and reactions based on MWFRS with additional C&C member design.

See DWG VAL160100212 for valley details.

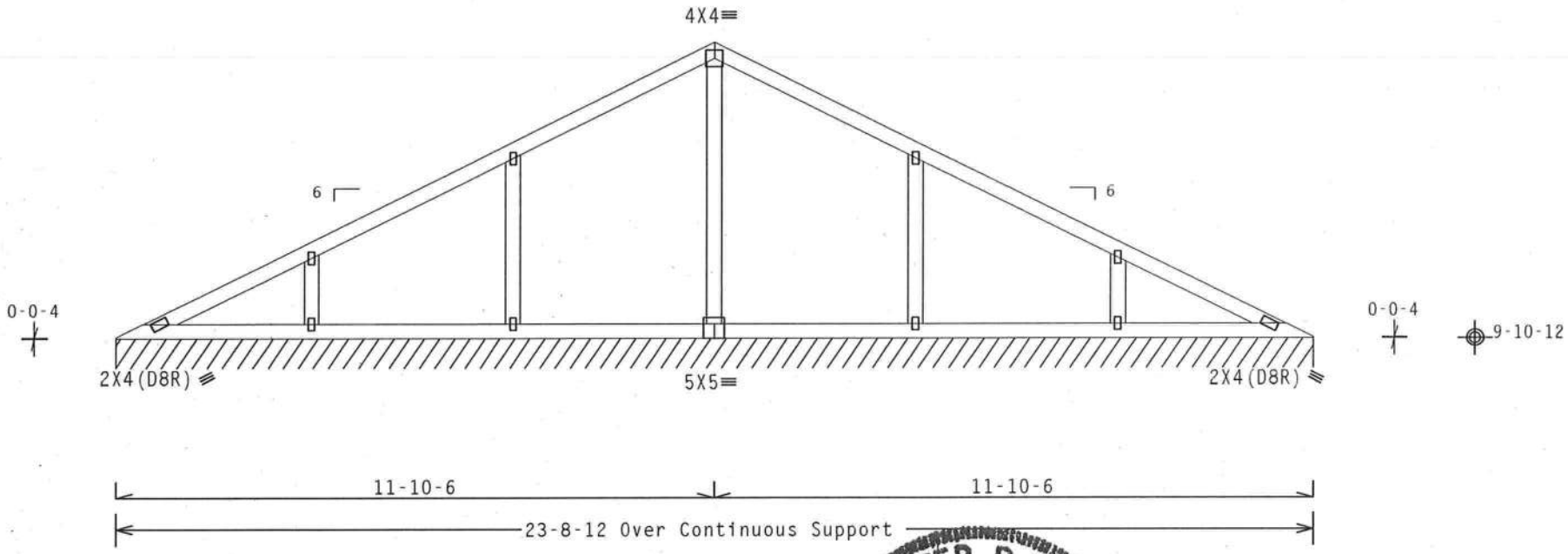

R=82 PLF U=0 PLF W=23-8-12
RL=3/-3 PLF

Note: All Plates Are 1.5X3 Except As Shown.

Design Crit: FBC2010Res/TPI-2007(STD)

PLT TYP. Wave | FT/RT=10%(0%)/0(0) | 10.03.00.022839 | QTY: | FL/-/4/-/-/R/- | Scale =.3125"/Ft.

ALPINE
ITW Building Components Group Inc.
Haines City, FL 33844
FL COA #0 278

WARNING READ AND FOLLOW ALL NOTES ON THIS SHEET!
IMPORTANT FURNISH THIS DESIGN TO ALL CONTRACTORS INCLUDING INSTALLERS.

Trusses require extreme care in fabricating, handling, shipping, installing and bracing. Refer to and follow the latest edition of BCSI (Building Component Safety Information, by TPI and WTCA) for safety practices prior to performing these functions. Installers shall provide temporary bracing per BCSI. Unless noted otherwise, top chord shall have properly attached structural sheathing and bottom chord shall have a properly attached rigid ceiling. Locations shown for permanent lateral restraint of webs shall have bracing installed per BCSI sections B3, B7 or B10, as applicable.

ITW Building Components Group Inc. (ITWBCG) shall not be responsible for any deviation from this design, any failure to build the truss in conformance with ANSI/TPI 1, or for handling, shipping, installation and bracing of trusses. Apply plates to each face of truss and position as shown above and on the Joint Details, unless noted otherwise. Refer to drawings 160A-Z for standard plate positions. A seal on this drawing or cover page listing this drawing, indicates acceptance of professional engineering responsibility solely for the design shown. The suitability and use of this design for any structure is the responsibility of the Building Designer per ANSI/TPI 1 Sec.2. For more information see: This job's general notes page; ITW-BCG: www.itwbcg.com; TPI: www.tpinst.org; WTCA: www.sbcindustry.com; ICC: www.iccsafe.org

WALTER P. FINN LICENSE No.22839 STATE OF FLORIDA PROFESSIONAL ENGINEER

04/13/2012

TC LL	20.0 PSF	REF R487-- 21869
TC DL	10.0 PSF	DATE 04/13/12
BC DL	10.0 PSF	DRW HCUSR487 12104019
BC LL	0.0 PSF	HC-ENG SSB/WPF
TOT.LD.	40.0 PSF	SEQN- 283149
DUR.FAC.	1.25	
SPACING	24.0"	JREF- 1UL8487_Z01

(12-077--LAKE CITY INDUSTRIES Varney Garage Add. -- 655 NW Lona Loop Lake City, - V3 19'8"12 Valley)

Top chord 2x4 SP M-30
Bot chord 2x4 SP M-30
Webs 2x4 SP #3

Bottom chord checked for 10.00 psf non-concurrent live load.

Deflection meets L/240 live and L/180 total load. Creep increase factor for dead load is 1.50.

MWFRS loads based on trusses located at least 15.00 ft. from roof edge.

120 mph wind, 15.00 ft mean hgt, ASCE 7-10, CLOSED bldg, not located within 9.00 ft from roof edge, RISK CAT II, EXP B, wind TC DL=5.0 psf, wind BC DL=5.0 psf. GCpi(+/-)=0.18

Wind loads and reactions based on MWFRS with additional C&C member design.

See DWG VAL160100212 for valley details.

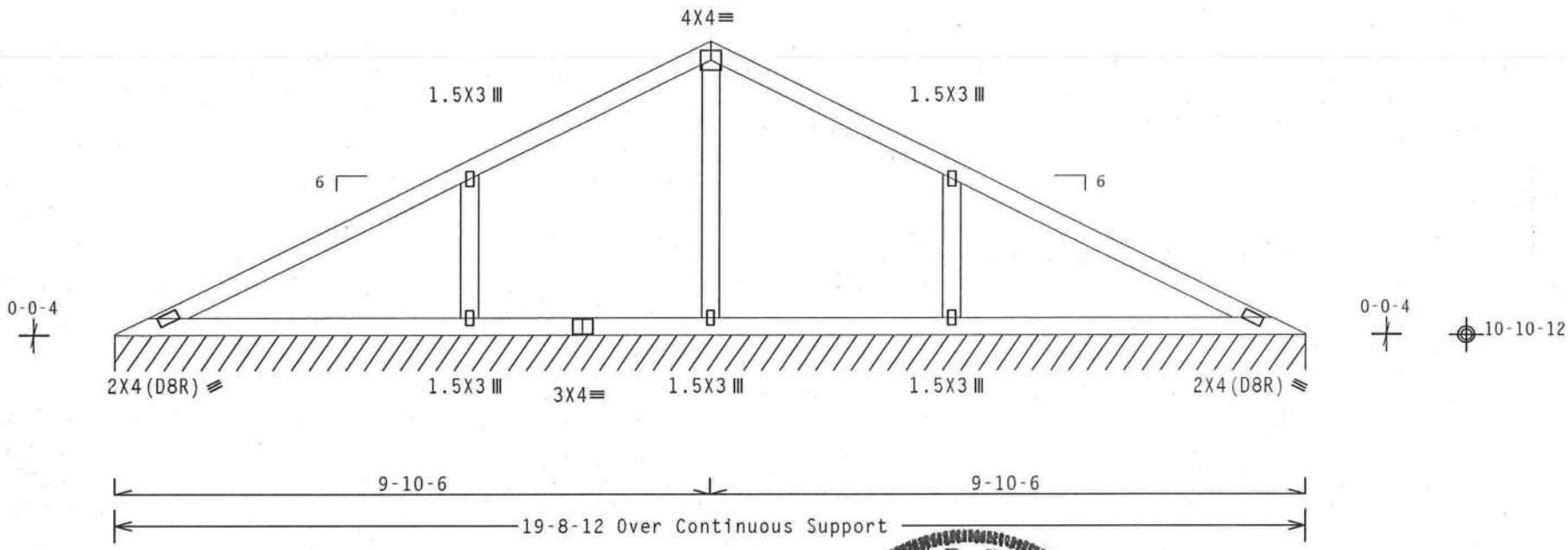

R=82 PLF U=0 PLF W=19-8-12
RL=3/-3 PLF

Design Crit: FBC2010Res/TPI-2007(STD)
FT/RT=10%(0%)/0(0)

PLT TYP. Wave | 10.03.11.0209.21 | QTY 1 | FL/-/4/-/-/R/- | Scale =.375"/Ft.

ALPINE
ITW Building Components Group Inc.
Haines City, FL 33844
FL COA #0 278

WARNING READ AND FOLLOW ALL NOTES ON THIS SHEET!
IMPORTANT FURNISH THIS DESIGN TO ALL CONTRACTORS INCLUDING INSTALLERS.

Trusses require extreme care in fabricating, handling, shipping, installing and bracing. Refer to and follow the latest edition of BCSI (Building Component Safety Information, by TPI and WTCA) for safety practices prior to performing these functions. Installers shall provide temporary bracing per BCSI. Unless noted otherwise, top chord shall have properly attached structural sheathing and bottom chord shall have a properly attached rigid ceiling. Locations shown for permanent lateral restraint of webs shall have bracing installed per BCSI sections B3, B7 or B10, as applicable.

ITW Building Components Group Inc. (ITWBCG) shall not be responsible for any deviation from this design, any failure to build the truss in conformance with ANSI/TPI 1, or for handling, shipping, installation and bracing of trusses. Apply plates to each face of truss and position as shown above and on the Joint Details, unless noted otherwise. Refer to drawings 160A-Z for standard plate positions. A seal on this drawing or cover page listing this drawing, indicates acceptance of professional engineering responsibility solely for the design shown. The suitability and use of this design for any structure is the responsibility of the Building Designer per ANSI/TPI 1 Sec.2. For more information see: This job's general notes page; ITW-BCG: www.itwbcg.com; TPI: www.tpinst.org; WTCA: www.sbcindustry.com; ICC: www.iccsafe.org

WALTER P. FINN
LICENSE
No.22838
STATE OF FLORIDA
PROFESSIONAL ENGINEER
04/13/2012

TC LL	20.0 PSF	REF	R487-- 21870
TC DL	10.0 PSF	DATE	04/13/12
BC DL	10.0 PSF	DRW	HCUSR487 12104020
BC LL	0.0 PSF	HC-ENG	SSB/WPF
TOT.LD.	40.0 PSF	SEQN-	283154
DUR.FAC.	1.25		
SPACING	24.0"	JREF-	1UL8487_Z01

(12-077--LAKE CITY INDUSTRIES Varney Garage Add. -- 655 NW Lona Loop Lake City, - V4 15'8"12 Valley)

Top chord 2x4 SP M-30
Bot chord 2x4 SP M-30
Webs 2x4 SP #3

Bottom chord checked for 10.00 psf non-concurrent live load.

Deflection meets L/240 live and L/180 total load. Creep increase factor for dead load is 1.50.

MWFRS loads based on trusses located at least 15.00 ft. from roof edge.

120 mph wind, 15.00 ft mean hgt, ASCE 7-10, CLOSED bldg, not located within 9.00 ft from roof edge, RISK CAT II, EXP B, wind TC DL=5.0 psf, wind BC DL=5.0 psf. GCpi(+/-)=0.18

Wind loads and reactions based on MWFRS with additional C&C member design.

See DWG VAL160100212 for valley details.

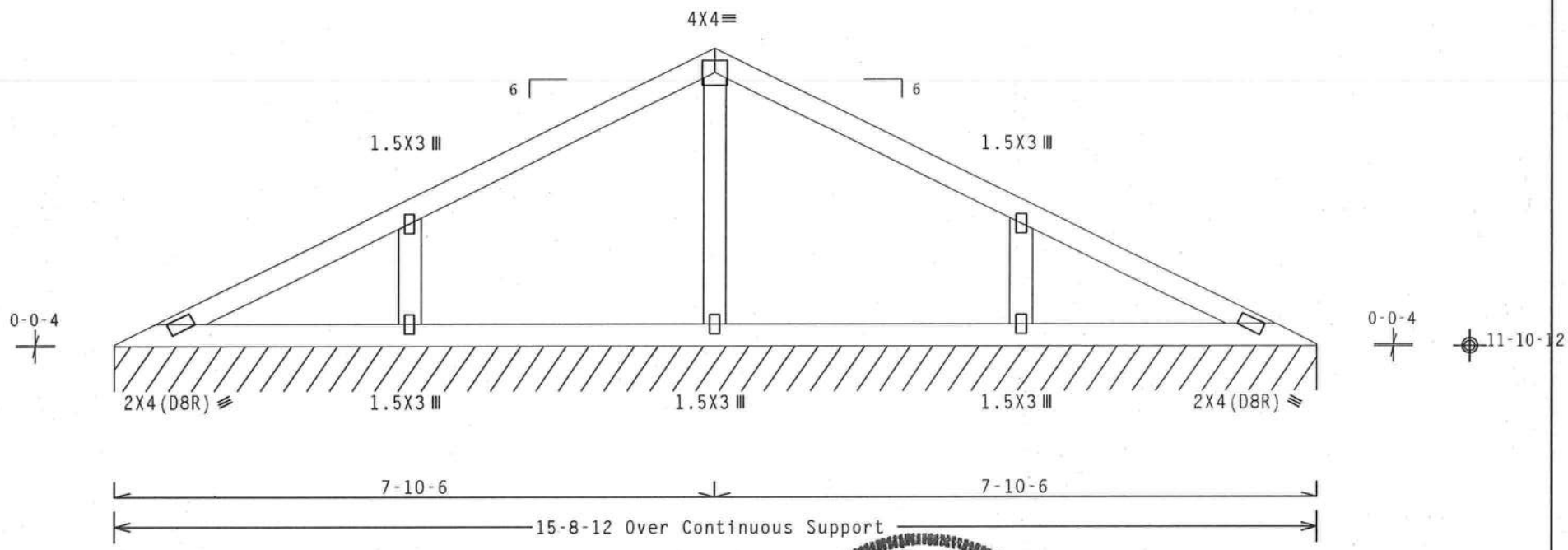

R=82 PLF U=0 PLF W=15-8-12
RL=3/-3 PLF

Design Crit: FBC2010Res/TPI-2007(STD)

PLT TYP. Wave FT/RT=10%(0%)/0(0) 10.03.11.0208.21 QTY 1 FL/-/4/-/-/R/- Scale =.5"/Ft.

ALPINE
ITW Building Components Group Inc.
Haines City, FL 33844
FL COA #0 278

WARNING READ AND FOLLOW ALL NOTES ON THIS SHEET!
IMPORTANT FURNISH THIS DESIGN TO ALL CONTRACTORS INCLUDING INSTALLERS.

Trusses require extreme care in fabricating, handling, shipping, installing and bracing. Refer to and follow the latest edition of BCSI (Building Component Safety Information, by TPI and WTCA) for safety practices prior to performing these functions. Installers shall provide temporary bracing per BCSI. Unless noted otherwise, top chord shall have properly attached structural sheathing and bottom chord shall have a properly attached rigid ceiling. Locations shown for permanent lateral restraint of webs shall have bracing installed per BCSI sections B3, B7 or B10, as applicable.

ITW Building Components Group Inc.'(ITWBCG) shall not be responsible for any deviation from this design, any failure to build the truss in conformance with ANSI/TPI 1, or for handling, shipping, installing and bracing of trusses. Apply plates to each face of truss and position as shown above and on the Joint Details, unless noted otherwise. Refer to drawings 160A-Z for standard plate positions. A seal on this drawing or cover page listing this drawing, indicates acceptance of professional engineering responsibility solely for the design shown. The suitability and use of this design for any structure is the responsibility of the Building Designer per ANSI/TPI 1 Sec.2. For more information see: This Job's general notes page; ITW-BCG: www.itwbcg.com; TPI: www.tpinst.org; WTCA: www.sbcindustry.com; ICC: www.iccsafe.org

WALTER P. FINN
LICENSE
No.22839
STATE OF FLORIDA
PROFESSIONAL ENGINEER
04/13/2012

TC LL	20.0 PSF	REF	R487-- 21871
TC DL	10.0 PSF	DATE	04/13/12
BC DL	10.0 PSF	DRW	HCUSR487 12104021
BC LL	0.0 PSF	HC-ENG	SSB/WPF
TOT.LD.	40.0 PSF	SEQN-	283159
DUR.FAC.	1.25		
SPACING	24.0"	JREF-	1UL8487_Z01

(12-077--LAKE CITY INDUSTRIES Varney Garage Add. -- 655 NW Lona Loop Lake City, - V5 11'8"12 Valley)

Top chord 2x4 SP M-30
Bot chord 2x4 SP M-30
Webs 2x4 SP #3

Bottom chord checked for 10.00 psf non-concurrent live load.

Deflection meets L/240 live and L/180 total load. Creep increase factor for dead load is 1.50.

MWFRS loads based on trusses located at least 15.00 ft. from roof edge.

120 mph wind, 15.00 ft mean hgt, ASCE 7-10, CLOSED bldg, not located within 9.00 ft from roof edge, RISK CAT II, EXP B, wind TC DL=5.0 psf, wind BC DL=5.0 psf. GCpi(+/-)=0.18

Wind loads and reactions based on MWFRS with additional C&C member design.

See DWG VAL160100212 for valley details.

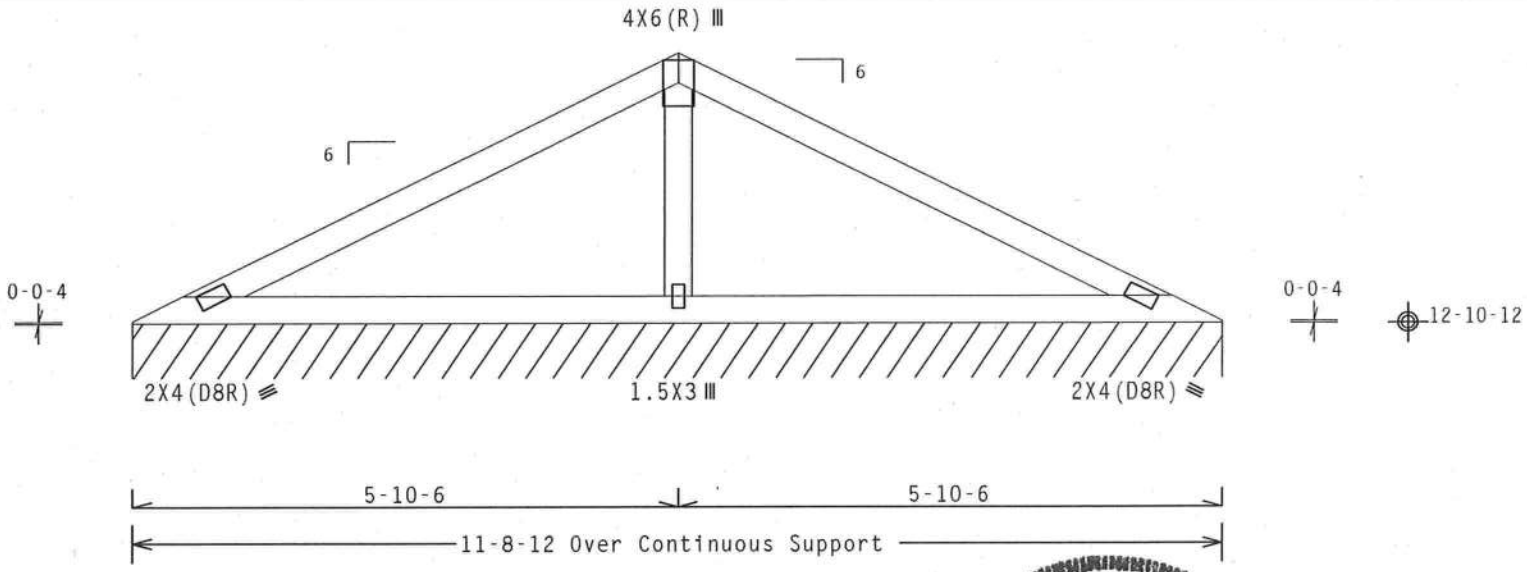

R=82 PLF U=0 PLF W=11-8-12
RL=3/-3 PLF

Design Crit: FBC2010Res/TPI-2007(STD)

PLT TYP. Wave FT/RT=10%(0%)/0(0) 10.03.11.0209.21 QTY:1 FL/-/4/-/-/R/- Scale =.5"/Ft.

ALPINE
ITW Building Components Group Inc.
Haines City, FL 33844
FL COA #0 278

WARNING READ AND FOLLOW ALL NOTES ON THIS SHEET!
IMPORTANT FURNISH THIS DESIGN TO ALL CONTRACTORS INCLUDING INSTALLERS.

Trusses require extreme care in fabricating, handling, shipping, installing and bracing. Refer to and follow the latest edition of BCSI (Building Component Safety Information, by TPI and WTCA) for recommended practices prior to performing these functions. Installers shall provide temporary bracing per BCSI. Unless noted otherwise, top chord shall have properly attached structural sheathing and bottom chord shall have a properly attached rigid ceiling. Locations shown for permanent lateral restraint of webs shall have bracing installed per BCSI sections B3, B7 or B10, as applicable.

ITW Building Components Group Inc. (ITWBCG) shall not be responsible for any deviation from this design, any failure to build the truss in conformance with ANSI/TPI 1, or for handling, shipping, installing and bracing of trusses. Apply plates to each face of truss and position as shown above and on the Joint Details, unless noted otherwise. Refer to drawings 160A-2 for standard plate positions. A seal on this drawing or cover page listing this drawing, indicates acceptance of professional engineering responsibility solely for the design shown. The suitability and use of this design for any structure is the responsibility of the Building Designer per ANSI/TPI 1 Sec.2. For more information see: This job's general notes page; ITW-BCG: www.itwbcg.com; TPI: www.tpinst.org; WTCA: www.sbcindustry.com; ICC: www.iccsafe.org

WALTER P. FINN LICENSE No. 22839 STATE OF FLORIDA PROFESSIONAL ENGINEER
04/13/2012

TC LL	20.0 PSF	REF	R487-- 21872
TC DL	10.0 PSF	DATE	04/13/12
BC DL	10.0 PSF	DRW	HCUSR487 12104022
BC LL	0.0 PSF	HC-ENG	SSB/WPF
TOT.LD.	40.0 PSF	SEQN-	283162
DUR.FAC.	1.25		
SPACING	24.0"	JREF-	1UL8487_Z01

THIS DWG PREPARED FROM COMPUTER INPUT (LOADS & DIMENSIONS) SUBMITTED BY TRUSS MFR.

(12-077--LAKE CITY INDUSTRIES Varney Garage Add. -- 655 NW Lona Loop Lake City, - V6 7'8"12 Valley)

Top chord 2x4 SP M-30
Bot chord 2x4 SP M-30
Webs 2x4 SP #3

Bottom chord checked for 10.00 psf non-concurrent live load.

Deflection meets L/240 live and L/180 total load. Creep increase factor for dead load is 1.50.

MWFRS loads based on trusses located at least 15.02 ft. from roof edge.

120 mph wind, 15.02 ft mean hgt, ASCE 7-10, CLOSED bldg, Located anywhere in roof, RISK CAT II, EXP B, wind TC DL=5.0 psf, wind BC DL=5.0 psf. GCpi(+/-)=0.18

Wind loads and reactions based on MWFRS with additional C&C member design.

See DWG VAL160100212 for valley details.

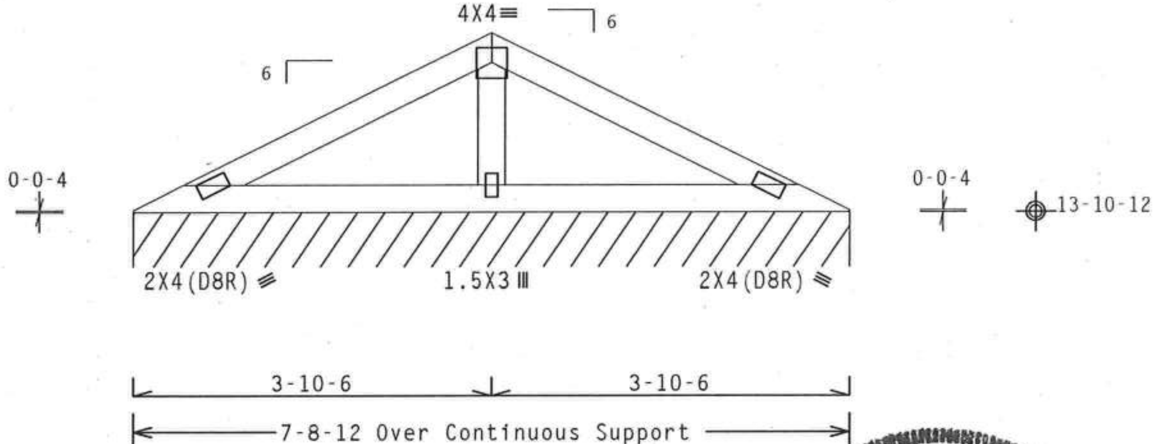

R=82 PLF U=0 PLF W=7-8-12
RL=3/-3 PLF

Design Crit: FBC2010Res/TPI-2007(STD)
FT/RT=10%(0%)/0(0) 10.03. QTY:

PLT TYP. Wave

ALPINE
ITW Building Components Group Inc.
Haines City, FL 33844
FL COA #0 278

WARNING READ AND FOLLOW ALL NOTES ON THIS SHEET!
IMPORTANT FURNISH THIS DESIGN TO ALL CONTRACTORS INCLUDING INSTALLERS.

Trusses require extreme care in fabricating, handling, shipping, installing and bracing. Refer to and follow the latest edition of BCSI (Building Component Safety Information, by TPI and WTCA) for safety practices prior to performing these functions. Installers shall provide temporary bracing per BCSI. Unless noted otherwise, top chord shall have properly attached structural sheathing and bottom chord shall have a properly attached rigid ceiling. Locations shown for permanent lateral restraint of webs shall have bracing installed per BCSI sections B3, B7 or B10, as applicable.

ITW Building Components Group Inc. (ITWBCG) shall not be responsible for any deviation from this design, any failure to build the truss in conformance with ANSI/TPI 1, or for handling, shipping, installation & bracing of trusses. Apply plates to each face of truss and position as shown above and on the Joint Details, unless noted otherwise. Refer to drawings 160A-Z for standard plate positions. A seal on this drawing or cover page listing this drawing, indicates acceptance of professional engineering responsibility solely for the design shown. The suitability and use of this design for any structure is the responsibility of the Building Designer per ANSI/TPI 1 Sec.2. For more information see: This job's general notes page; ITW-BCG: www.itwbcg.com; TPI: www.tpinst.org; WTCA: www.sbcindustry.com; ICC: www.iccsafe.org

WALTER P. FINN LICENSE STATE OF FLORIDA PROFESSIONAL ENGINEER

04/13/2012

FL/-/4/-/-/R/-

TC LL	20.0 PSF	REF	R487-- 21873
TC DL	10.0 PSF	DATE	04/13/12
BC DL	10.0 PSF	DRW	HCUSR487 12104023
BC LL	0.0 PSF	HC-ENG	SSB/WPF
TOT.LD.	40.0 PSF	SEQN-	283165
DUR.FAC.	1.25		
SPACING	24.0"	JREF-	1UL8487_Z01

Scale =.5"/Ft.

THIS DWG PREPARED FROM COMPUTER INPUT (LOADS & DIMENSIONS) SUBMITTED BY TRUSS MFR.

(12-077--LAKE CITY INDUSTRIES Varney Garage Add. -- 655 NW Lona Loop Lake City, - V7 3'8"12 Valley)

Top chord 2x4 SP M-30
Bot chord 2x4 SP M-30

Bottom chord checked for 10.00 psf non-concurrent live load.

Deflection meets L/240 live and L/180 total load. Creep increase factor for dead load is 1.50.

MWFRS loads based on trusses located at least 15.52 ft. from roof edge.

120 mph wind, 15.52 ft mean hgt, ASCE 7-10, CLOSED bldg, Located anywhere in roof, RISK CAT II, EXP B, wind TC DL=5.0 psf, wind BC DL=5.0 psf. GCpi(+/-)=0.18

Wind loads and reactions based on MWFRS with additional C&C member design.

See DWG VAL160100212 for valley details.

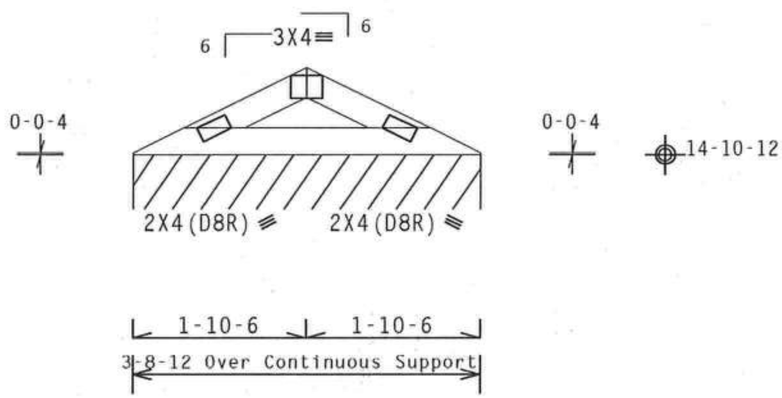

R=82 PLF U=0 PLF W=3-8-12

PLT TYP. Wave

Design Crit: FBC2010Res/TPI-2007(STD)
FT/RT=10%(0%)/0(0) 10.03. QTY 1

ALPINE
ITW Building Components Group Inc.
Haines City, FL 33844
FL COA #0 278

WARNING READ AND FOLLOW ALL NOTES ON THIS SHEET!
IMPORTANT FURNISH THIS DESIGN TO ALL CONTRACTORS INCLUDING INSTALLERS.

Trusses require extreme care in fabricating, handling, shipping, installing and bracing. Refer to and follow the latest edition of BCSI (Building Component Safety Information, by TPI and WTCA) for safety practices prior to performing these functions. Installers shall provide temporary bracing per BCSI. Unless noted otherwise, top chord shall have properly attached structural sheathing and bottom chord shall have a properly attached rigid ceiling. Locations shown for permanent lateral restraint of webs shall have bracing installed per BCSI sections B3, B7 or B10, as applicable.

ITW Building Components Group Inc. (ITWBCG) shall not be responsible for any deviation from this design, any failure to build the truss in conformance with ANSI/TPI 1, or for handling, shipping, installation or bracing of trusses. Apply plates to each face of truss and position as shown above and on the Joint Details, unless noted otherwise. Refer to drawings 160A-Z for standard plate positions. A seal on this drawing or cover page listing this drawing, indicates acceptance of professional engineering responsibility solely for the design shown. The suitability and use of this design for any structure is the responsibility of the Building Designer per ANSI/TPI 1 Sec.2. For more information see: This job's general notes page: ITW-BCG: www.itwbcg.com; TPI: www.tpinst.org; WTCA: www.sbcindustry.com; ICC: www.iccsafe.org

WALTER P. FINN
LICENSE
No. 22839
STATE OF FLORIDA
PROFESSIONAL ENGINEER
04/13/2012

FL/-/4/-/-/R/-			Scale =.5"/Ft.
TC LL	20.0 PSF		REF R487-- 21874
TC DL	10.0 PSF		DATE 04/13/12
BC DL	10.0 PSF		DRW HCUSR487 12104024
BC LL	0.0 PSF		HC-ENG SSB/WPF
TOT.LD.	40.0 PSF		SEQN- 283168
DUR.FAC.	1.25		
SPACING	24.0"		JREF- 1UL8487_Z01

THIS DWG PREPARED FROM COMPUTER INPUT (LOADS & DIMENSIONS) SUBMITTED BY TRUSS MFR.

(12-077--LAKE CITY INDUSTRIES Varney Garage Add. -- 655 NW Lona Loop Lake City, - DV 3'5"12 Valley)

Top chord 2x4 SP M-30
Bot chord 2x4 SP M-30

Bottom chord checked for 10.00 psf non-concurrent live load.

Deflection meets L/240 live and L/180 total load. Creep increase factor for dead load is 1.50.

MWFRS loads based on trusses located at least 15.00 ft. from roof edge.

120 mph wind, 15.00 ft mean hgt, ASCE 7-10, CLOSED bldg, Located anywhere in roof, RISK CAT II, EXP B, wind TC DL=5.0 psf, wind BC DL=5.0 psf. GCpi(+/-)=0.18

Wind loads and reactions based on MWFRS with additional C&C member design.

See DWG VAL160100212 for valley details.

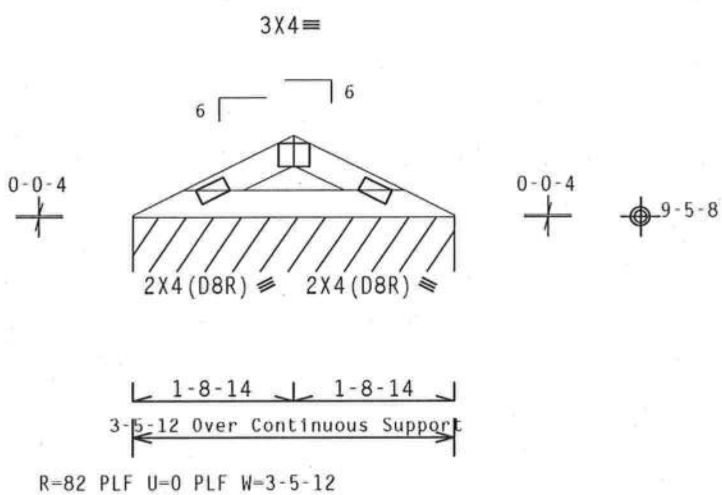

PLT TYP. Wave

Design Crit: FBC2010Res/TPI-2007(STD)
FT/RT=10%(0%)/0(0) 10.03.1 QTY:

FL/-/4/-/-/R/- Scale =.5"/Ft.

ALPINE
ITW Building Components Group Inc.
Haines City, FL 33844
FL COA #0 278

WARNING READ AND FOLLOW ALL NOTES ON THIS SHEET!
IMPORTANT FURNISH THIS DESIGN TO ALL CONTRACTORS INCLUDING INSTALLERS.

Trusses require extreme care in fabricating, handling, shipping, installing and bracing. Refer to and follow the latest edition of BCSI (Building Component Safety Information, by TPI and WTCA) for safety practices prior to performing these functions. Installers shall provide temporary bracing per BCSI. Unless noted otherwise, top chord shall have properly attached structural sheathing and bottom chord shall have a properly attached rigid ceiling. Locations shown for permanent lateral restraint of webs shall have bracing installed per BCSI sections B3, B7 or B10, as applicable.

ITW Building Components Group Inc. (ITWBCG) shall not be responsible for any deviation from this design, any failure to build the truss in conformance with ANSI/TPI 1, or for handling, shipping, installation & bracing of trusses. Apply plates to each face of truss and position as shown above and on the Joint Details, unless noted otherwise. Refer to drawings 160A-Z for standard plate positions. A seal on this drawing or cover page listing this drawing, indicates acceptance of professional engineering responsibility solely for the design shown. The suitability and use of this design for any structure is the responsibility of the Building Designer per ANSI/TPI 1 Sec.2. For more information see: This job's general notes page; ITW-BCG: www.itwbcg.com; TPI: www.tpinst.org; WTCA: www.sbcindustry.com; ICC: www.iccsafe.org

WALTER P. FINN
LICENSE
No. 22839
STATE OF FLORIDA
PROFESSIONAL ENGINEER
04/13/2012

TC LL	20.0 PSF	REF	R487-- 21875
TC DL	10.0 PSF	DATE	04/13/12
BC DL	10.0 PSF	DRW	HCUSR487 12104025
BC LL	0.0 PSF	HC-ENG	SSB/WPF
TOT.LD.	40.0 PSF	SEQN-	283171
DUR.FAC.	1.25		
SPACING	24.0"	JREF-	1UL8487_Z01

Gable Stud Reinforcement Detail

ASCE 7-10: 120 mph Wind Speed, 15' Mean Height, Enclosed, Exposure C, Kzt = 1.00

Or: 100 mph Wind Speed, 15' Mean Height, Partially Enclosed, Exposure C, Kzt = 1.00
Or: 100 mph Wind Speed, 15' Mean Height, Enclosed, Exposure D, Kzt = 1.00

Max Gable Vertical Length

2x4 Gable Vertical Spacing	Species	Brace Grade	No Braces	(1) 1x4 'L' Brace * Group A	(1) 1x4 'L' Brace * Group B	(1) 2x4 'L' Brace * Group A	(1) 2x4 'L' Brace * Group B	(2) 2x4 'L' Brace ** Group A	(2) 2x4 'L' Brace ** Group B	(1) 2x6 'L' Brace * Group A	(1) 2x6 'L' Brace * Group B	(2) 2x6 'L' Brace ** Group A	(2) 2x6 'L' Brace ** Group B
24" o.c.	SPF HF	#1 / #2	4' 10"	8' 2"	8' 6"	9' 8"	10' 1"	11' 6"	12' 0"	14' 0"	14' 0"	14' 0"	14' 0"
		#3	4' 7"	7' 9"	8' 3"	9' 7"	9' 11"	11' 5"	11' 10"	14' 0"	14' 0"	14' 0"	14' 0"
		Stud	4' 7"	8' 1"	8' 4"	9' 7"	9' 11"	11' 5"	11' 10"	14' 0"	14' 0"	14' 0"	14' 0"
		Standard	4' 7"	8' 1"	8' 4"	9' 7"	9' 11"	11' 5"	11' 10"	14' 0"	14' 0"	14' 0"	14' 0"
	SP DFL	#1	4' 11"	8' 3"	8' 7"	9' 9"	10' 1"	11' 7"	12' 1"	14' 0"	14' 0"	14' 0"	14' 0"
		#2	4' 10"	8' 2"	8' 6"	9' 8"	10' 1"	11' 6"	12' 0"	14' 0"	14' 0"	14' 0"	14' 0"
		#3	4' 7"	6' 11"	7' 4"	9' 3"	9' 10"	11' 5"	11' 10"	14' 0"	14' 0"	14' 0"	14' 0"
		Stud	4' 7"	6' 11"	7' 4"	9' 3"	9' 10"	11' 5"	11' 10"	14' 0"	14' 0"	14' 0"	14' 0"
		Standard	4' 7"	6' 0"	6' 4"	8' 0"	8' 6"	10' 10"	11' 7"	12' 6"	13' 5"	14' 0"	14' 0"
16" o.c.	SPF HF	#1 / #2	5' 6"	9' 5"	9' 9"	11' 1"	11' 6"	13' 2"	13' 9"	14' 0"	14' 0"	14' 0"	14' 0"
		#3	5' 3"	9' 3"	9' 9"	10' 11"	11' 4"	13' 0"	13' 7"	14' 0"	14' 0"	14' 0"	14' 0"
		Stud	5' 3"	9' 3"	9' 7"	10' 11"	11' 4"	13' 0"	13' 7"	14' 0"	14' 0"	14' 0"	14' 0"
		Standard	5' 3"	9' 3"	9' 7"	10' 11"	11' 4"	13' 0"	13' 7"	14' 0"	14' 0"	14' 0"	14' 0"
	SP DFL	#1	5' 8"	9' 5"	9' 10"	11' 2"	11' 7"	13' 3"	13' 10"	14' 0"	14' 0"	14' 0"	14' 0"
		#2	5' 6"	9' 5"	9' 9"	11' 1"	11' 6"	13' 2"	13' 9"	14' 0"	14' 0"	14' 0"	14' 0"
		#3	5' 3"	8' 6"	9' 0"	10' 11"	11' 4"	13' 0"	13' 7"	14' 0"	14' 0"	14' 0"	14' 0"
		Stud	5' 3"	8' 6"	9' 0"	10' 11"	11' 4"	13' 0"	13' 7"	14' 0"	14' 0"	14' 0"	14' 0"
		Standard	5' 3"	7' 4"	7' 10"	9' 9"	10' 5"	13' 0"	13' 7"	14' 0"	14' 0"	14' 0"	14' 0"
12" o.c.	SPF HF	#1 / #2	6' 1"	10' 4"	10' 8"	12' 2"	12' 8"	13' 2"	14' 0"	14' 0"	14' 0"	14' 0"	14' 0"
		#3	5' 9"	10' 2"	10' 7"	12' 0"	12' 6"	14' 0"	14' 0"	14' 0"	14' 0"	14' 0"	14' 0"
		Stud	5' 9"	10' 2"	10' 7"	12' 0"	12' 6"	14' 0"	14' 0"	14' 0"	14' 0"	14' 0"	14' 0"
		Standard	5' 9"	10' 2"	10' 7"	12' 0"	12' 6"	14' 0"	14' 0"	14' 0"	14' 0"	14' 0"	14' 0"
	SP DFL	#1	6' 2"	10' 5"	10' 9"	12' 3"	12' 9"	14' 0"	14' 0"	14' 0"	14' 0"	14' 0"	14' 0"
		#2	6' 1"	10' 4"	10' 8"	12' 2"	12' 8"	14' 0"	14' 0"	14' 0"	14' 0"	14' 0"	14' 0"
		#3	5' 9"	9' 9"	10' 5"	12' 0"	12' 6"	14' 0"	14' 0"	14' 0"	14' 0"	14' 0"	14' 0"
		Stud	5' 9"	9' 9"	10' 5"	12' 0"	12' 6"	14' 0"	14' 0"	14' 0"	14' 0"	14' 0"	14' 0"
		Standard	5' 9"	8' 6"	9' 0"	11' 3"	12' 1"	14' 0"	14' 0"	14' 0"	14' 0"	14' 0"	14' 0"

Bracing Group Species and Grades:

Group A:

Spruce-Pine-Fir

#1 / #2	Standard
#3	Stud

Hem-Fir

#2	Stud
#3	Standard

Douglas Fir-Larch

#3
Stud
Standard

Southern Pine***

#3
Stud
Standard

Group B:

Hem-Fir

#1 & Btr
#1

Douglas Fir-Larch

#1
#2

Southern Pine***

#1
#2

1x4 Braces shall be SRB (Stress-Rated Board).

***For 1x4 So. Pine use only Industrial 55 or Industrial 45 Stress-Rated Boards. Group B values may be used with these grades.

Gable Truss Detail Notes:

Wind Load deflection criterion is L/240.

Provide uplift connections for 35 plf over continuous bearing (5 psf TC Dead Load).

Gable end supports load from 4' 0" outlookers with 2' 0" overhang, or 12" plywood overhang.

So. Pine lumber design values based on the ALSC January, 2012 rulin

Attach 'L' braces with 10d (0.128"x3.0" min) nails.

* For (1) 'L' brace: space nails at 2" o.c. in 18" end zones and 4" o.c. between zones.

** For (2) 'L' braces: space nails at 3" o.c. in 18" end zones and 6" o.c. between zones.

'L' bracing must be a minimum of 80% of web member length.

Gable Vertical Plate Sizes	
Vertical Length	No Splice
Less than 4' 0"	1X4 or 2X3
Greater than 4' 0", but less than 11' 6"	2X4
Greather than 11' 6"	2.5X4

+ Refer to common truss design for peak, splice, and heel plates.

Refer to the Building Designer for conditions not addressed by this detail.

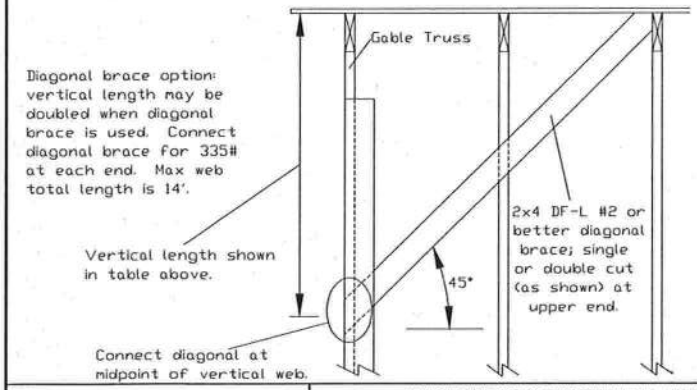

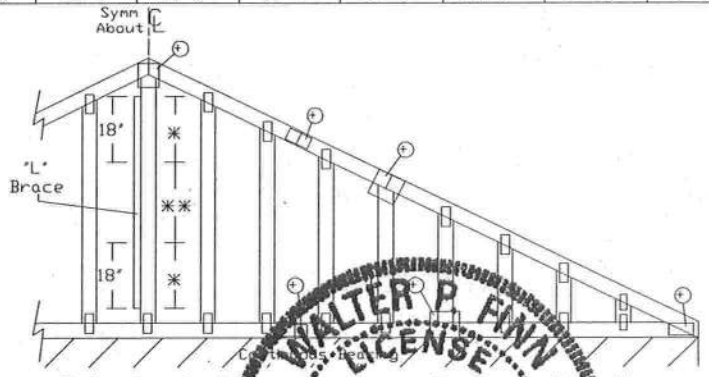

Refer to chart above for max gable vertical length.

WALTER P. FINN LICENSE No. 22839 STATE OF FLORIDA PROFESSIONAL ENGINEER 04/13/2012

ITW Building Components Group Inc.

Earth City, MO 63045

WARNING READ AND FOLLOW ALL NOTES ON THIS DRAWING!
IMPORTANT FURNISH THIS DRAWING TO ALL CONTRACTORS INCLUDING THE INSTALLERS.

Trusses require extreme care in fabricating, handling, shipping, installing and bracing. Refer to and follow the latest edition of BCSI (Building Component Safety Information, by TPI and WTCA) for safety practices prior to performing these functions. Installers shall provide temporary bracing per BCSI. Unless noted otherwise, top chord shall have properly attached structural sheathing and bottom chord shall have a properly attached rigid ceiling. Locations shown for permanent lateral restraint of webs shall have bracing installed per BCSI sections B3, B7 or B10, as applicable. Apply plates to each face of truss and position as shown above and on the Joint Details, unless noted otherwise. Refer to drawings 160A-Z for standard plate positions.

ITW Building Components Group Inc. shall not be responsible for any deviation from this drawing, or failure to build the truss in conformance with ANSI/TPI 1, or for handling, shipping, installation & bracing of trusses. A seal on this drawing or cover page listing this drawing, indicates acceptance of professional engineering responsibility solely for the design shown. The suitability and use of this drawing for any structure is the responsibility of the Building Designer per ANSI/TPI 1 Sec.2. For more information see this job's general notes page and these web sites:
ITWBCG: www.itwbcg.com; TPI: www.tpinst.org; WTCA: www.sbcindustry.org; ICC: www.iccsafe.org

MAX. TOT. LD. 60 PSF

MAX. SPACING 24.0"

REF	ASCE7-10-GAB12015
DATE	2/14/12
DRWG	A12015ENC100212

Gable Detail

For Let-in Verticals

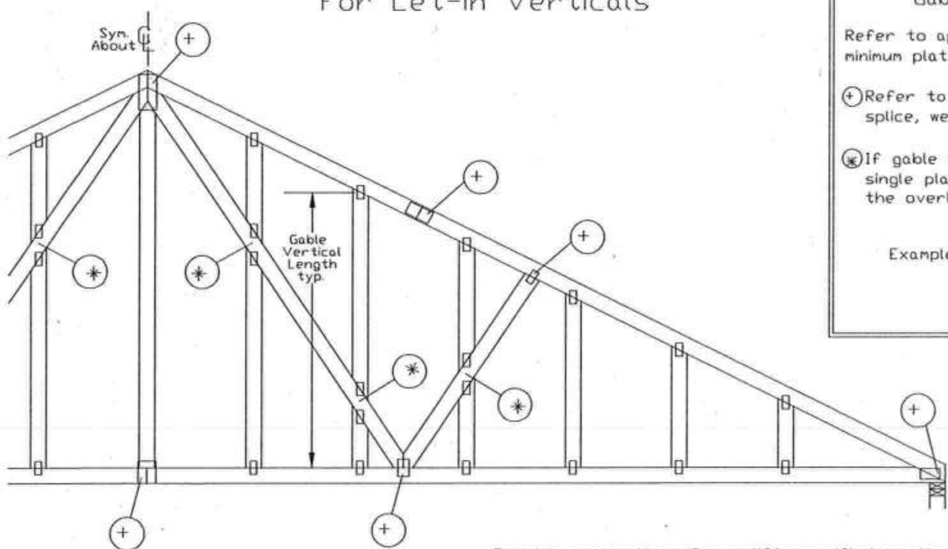

Gable Truss Plate Sizes

Refer to appropriate ITW gable detail for minimum plate sizes for vertical studs.

(+) Refer to Engineered truss design for peak, splice, web, and heel plates.

(*) If gable vertical plates overlap, use a single plate that covers the total area of the overlapped plates to span the web.

Example:

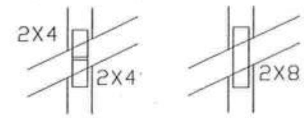

'T' Reinforcement Attachment Detail

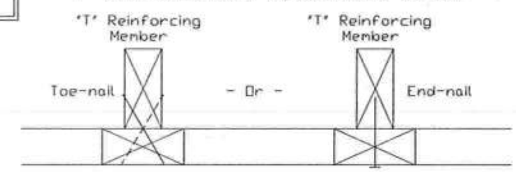

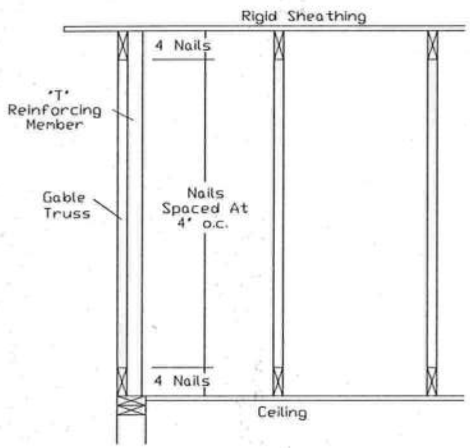

Provide connections for uplift specified on the engineered truss design.

Attach each 'T' reinforcing member with
End Driven Nails:
10d Common (0.148"x 3.",min) Nails at 4" o.c. plus
(4) nails in the top and bottom chords.

Toenailed Nails:
10d Common (0.148"x3",min) Toenails at 4" o.c. plus
(4) toenails in the top and bottom chords.

This detail to be used with the appropriate ITW gable detail for ASCE wind load.

ASCE 7-98 Gable Detail Drawings
A13015980109, A12015980109, A11015980109, A10015980109,
A13030980109, A12030980109, A11030980109, A10030980109

ASCE 7-02 Gable Detail Drawings
A13015020109, A12015020109, A11015020109, A10015020109, A14015020109,
A13030020109, A12030020109, A11030020109, A10030020109, A14030020109

ASCE 7-05 Gable Detail Drawings
A13015050109, A12015050109, A11015050109, A10015050109, A14015050109,
A13030050109, A12030050109, A11030050109, A10030050109, A14030050109

ASCE 7-10 Gable Detail Drawings
A11515ENC100212, A12015ENC100212, A14015ENC100...
A18015ENC100212, A20015ENC100212, A20015EN...
A11530ENC100212, A12030ENC100212, A14030...
A18030ENC100212, A20030ENC100212, A200...

See appropriate ITW gable detail for maxim... unreinforced gable vertical length.

To convert from 'L' to 'T' reinforcing members, multiply 'T' increase by length (based on appropriate ITW gable detail).

Maximum allowable 'T' reinforced gable vertical length is 14' from top to bottom chord.

'T' reinforcing member material must match size, specie, and grade of the 'L' reinforcing member.

Web Length Increase w/ "T" Brace

'T' Reinf. Mbr. Size	'T' Increase
2x4	30 %
2x6	20 %

Example:
ASCE 7-10 Wind Speed = 120 mph
Mean Roof Height = 30 ft, Kzt = 1.00
Gable Vertical = 24"o.c. SP #3
'T' Reinforcing Member Size = 2x4
'T' Brace Increase (From Above) = 30% = 1.30
(1) 2x4 'L' Brace Length = 8' 7"
Maximum 'T' Reinforced Gable Vertical Length
1.30 x 8' 7" = 11' 2"

WARNING READ AND FOLLOW ALL NOTES ON THIS DRAWING!
IMPORTANT FURNISH THIS DRAWING TO ALL CONTRACTORS INCLUDING THE INSTALLERS.

Trusses require extreme care in fabricating, handling, shipping, installing and bracing. Refer to and follow the latest edition of BCSI (Building Component Safety Information, by TPI and WTCA) for safety practices prior to performing these functions. Installers shall provide temporary bracing per BCSI. Unless noted otherwise, top chord shall have properly attached structural sheathing and bottom chord shall have a properly attached rigid ceiling. Locations shown for permanent lateral restraint of webs shall have bracing installed per BCSI sections B3, B7 or B10, as applicable. Apply plates to each face of truss and position as shown above and on the Joint Details, unless noted otherwise. Refer to drawings 160A-Z for standard plate positions.

ITW Building Components Group Inc. shall not be responsible for any deviation from this drawing, any failure to build the truss in conformance with ANSI/TPI 1, or for handling, shipping, installation & bracing of trusses. A seal on this drawing or cover page listing this drawing, indicates acceptance of professional engineering responsibility solely for the design shown. The suitability and use of this drawing for any structure is the responsibility of the Building Designer per ANSI/TPI 1 Sec.2. For more information see this job's general notes page and these web sites: ITWBCG: www.itwbcg.com; TPI: www.tpinst.org; WTCA: www.sbcindustry.org; ICC: www.iccsafe.or

Building Components Group Inc.
Earth City, MO 63045

WALTER P. FINN
LICENSE
No. 22839
STATE OF FLORIDA
PROFESSIONAL ENGINEER
04/13/2012

MAX. TOT. LD.	60 PSF
DUR. FAC.	ANY
MAX. SPACING	24.0"

REF	LET-IN VERT
DATE	2/16/12
DRWG	GBLLETIN0212

ASCE 7-10: 120 mph, 30' Mean Height, Closed, Exposure C
Common Residential Gable End Wind Bracing Requirements - Stiffeners

120 mph, 30ft. Mean Hgt, ASCE 7-10, Enclosed, Exp C, or
100 mph, 30ft. Mean Hgt, ASCE 7-10, Enclosed, Exp D, or
100 mph, 30ft. Mean Hgt, ASCE 7-10, Part. Enclosed, Exp C,
Kzt = 1.00, Wind TC DL=5.0 psf, Wind BC DL=5.0 psf.

Lateral chord bracing requirements
Top: Continuous roof sheathing
Bot: Continuous ceiling diaphragm

See Engineer's sealed design referencing this detail for lumber, plates, and other information not shown on this detail.

Nails: 10d box or gun (0.128"x3",min) nails.

H Less than 4'6" - no stud bracing required

H Greater than 4'6" to 7'6" in length
provide a 2x6 stiffback at mid-height and brace stiffback to roof diaphragm every 6'0" (see detail below or refer to DRWG A12030ENC10).

H Greater than 7'6" to 12'0" max:
provide a 2x6 stiffback at mid-height and brace to roof diaphragm every 4'0" (see detail below or refer to DRWG A12030ENC10).

✳ Optional 2x L-reinforcement attached to stiffback with 10d box or gun (0.128" x 3", min.) nails @ 6" o.c.

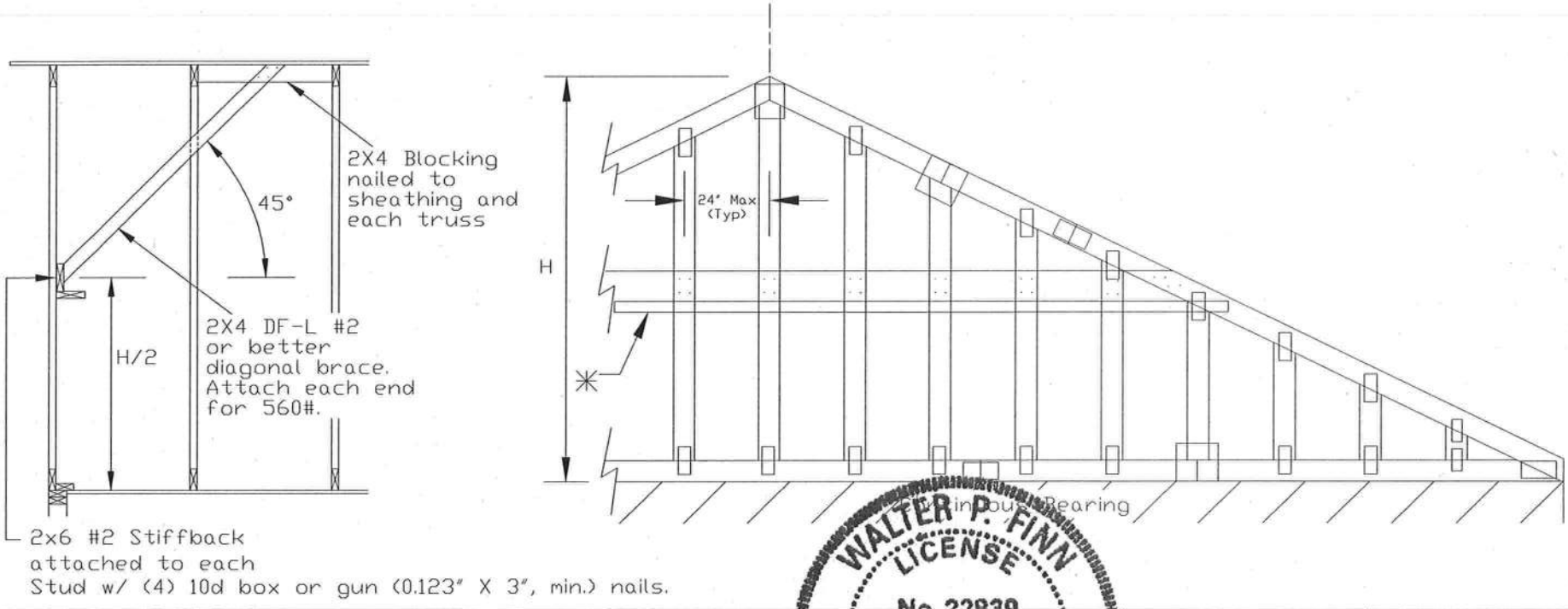

WALTER P. FINN
LICENSE
No. 22839
STATE OF FLORIDA
PROFESSIONAL ENGINEER
04/13/2012

Building Components Group Inc.

Earth City, MO 63045

WARNING READ AND FOLLOW ALL NOTES ON THIS DRAWING!
IMPORTANT FURNISH THIS DRAWING TO ALL CONTRACTORS INCLUDING THE INSTALLERS.

Trusses require extreme care in fabricating, handling, shipping, installing and bracing. Refer to and follow the latest edition of BCSI (Building Component Safety Information, by TPI and WTCA) for safety practices prior to performing these functions. Installers shall provide temporary bracing per BCSI. Unless noted otherwise, top chord shall have properly attached structural sheathing and bottom chord shall have a properly attached rigid ceiling. Locations shown for permanent lateral restraint of webs shall have bracing installed per BCSI sections B3, B7 or B10, as applicable. Apply plates to each face of truss and position as shown above and on the Joint Details, unless noted otherwise. Refer to drawings 160A-Z for standard plate positions.

ITW Building Components Group Inc. shall not be responsible for any deviation from this drawing, any failure to build the truss in conformance with ANSI/TPI 1, or for handling, shipping, installation & bracing of trusses. A seal on this drawing or cover page listing this drawing, indicates acceptance of professional engineering responsibility solely for the design shown. The suitability and use of this drawing for any structure is the responsibility of the Building Designer per ANSI/TPI 1 Sec.2.
For more information see this job's general notes page and these web sites:
ITWBCG: www.itwbcg.com; TPI: www.tpinst.org; WTCA: www.sbcindustry.org; ICC: www.iccsafe.or

Apr 13 '12

MAX. TOT. LD. 60 PSF

MAX. SPACING

REF	GE WHALER
DATE	2/14/12
DRWG	GABRST100212

CLB WEB BRACE SUBSTITUTION

THIS DETAIL IS TO BE USED WHEN CONTINUOUS LATERAL BRACING (CLB) IS SPECIFIED ON A TRUSS DESIGN BUT AN ALTERNATIVE WEB BRACING METHOD IS DESIRED.

NOTES:

THIS DETAIL IS ONLY APPLICABLE FOR CHANGING THE SPECIFIED CLB SHOWN ON SINGLE PLY SEALED DESIGNS TO T-BRACING OR SCAB BRACING.

ALTERNATIVE BRACING SPECIFIED IN CHART BELOW MAY BE CONSERVATIVE. FOR MINIMUM ALTERNATIVE BRACING, RE-RUN DESIGN WITH APPROPRIATE BRACING.

WEB MEMBER SIZE	SPECIFIED CLB BRACING	ALTERNATIVE BRACING T OR L-BRACE	ALTERNATIVE BRACING SCAB BRACE
2X3 OR 2X4	1 ROW	2X4	1-2X4
2X3 OR 2X4	2 ROWS	2X6	2-2X4
2X6	1 ROW	2X4	1-2X6
2X6	2 ROWS	2X6	2-2X4(*)
2X8	1 ROW	2X6	1-2X8
2X8	2 ROWS	2X6	2-2X6(*)

T-BRACE, L-BRACE AND SCAB BRACE TO BE SAME SPECIES AND GRADE OR BETTER THAN WEB MEMBER UNLESS SPECIFIED OTHERWISE ON ENGINEER'S SEALED DESIGN.

(*) CENTER SCAB ON WIDE FACE OF WEB. APPLY (1) SCAB TO EACH FACE OF WEB.

T-BRACING OR L-BRACING:

APPLY TO EITHER SIDE OF WEB NARROW FACE.
ATTACH WITH 10d BOX OR GUN (0.128"x 3.",MIN) NAILS.
AT 6" O.C.
BRACE IS A MINIMUM 80% OF WEB MEMBER LENGTH

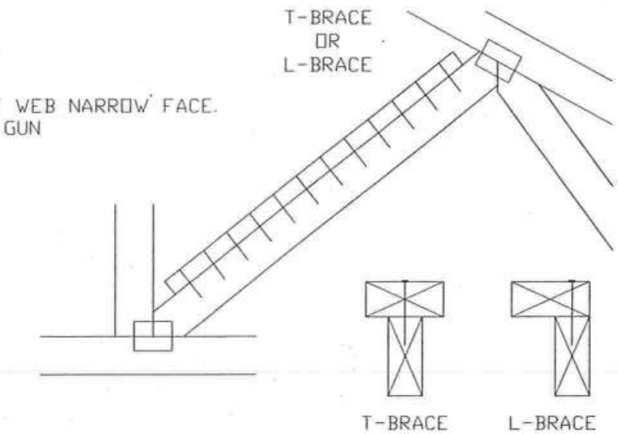

SCAB BRACING:

APPLY SCAB(S) TO WIDE FACE OF WEB.
NO MORE THAN (1) SCAB PER FACE.
ATTACH WITH 10d BOX OR GUN (0.128"x 3.",MIN) NAILS.
AT 6" O.C.
BRACE IS A MINIMUM 80% OF WEB MEMBER LENGTH

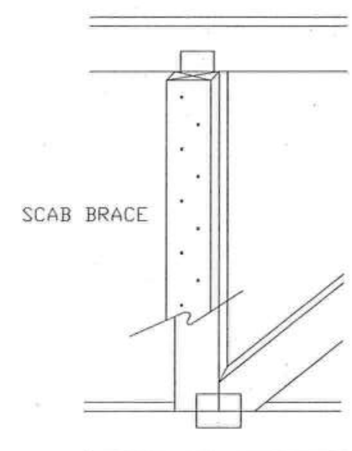

ITW Building Components Group Inc.
Earth City, MO 63045

WARNING READ AND FOLLOW ALL NOTES ON THIS SHEET! Trusses require extreme care in fabricating, handling, shipping, installing and bracing. Refer to and follow BCSI (Building Component Safety Information, by TPI and WTCA) for safety practices prior to performing these functions. Installers shall provide temporary bracing per BCSI. Unless noted otherwise, top chord shall have properly attached structural panels and bottom chord shall have properly attached rigid ceiling. Locations shown for permanent lateral restraint of webs shall have bracing installed per BCSI sections B3 & B7. See this job's general notes page for more information.

IMPORTANT FURNISH COPY OF THIS DESIGN TO INSTALLATION CONTRACTOR. ITW Building Components Group Inc. (ITWBCG) shall not be responsible for any deviation from this design, any failure to build the truss in conformance with TPI, or fabricating, handling, shipping, installing & bracing of trusses. ITWBCG connector plates are made of 20/18/16GA (W,H/S/K) ASTM A653 grade 37/40/60 (K/W/H,S) galv. steel. Apply plates to each face of truss, positioned as shown above and on Joint Details.
A seal on this drawing or cover page indicates acceptance and professional engineering responsibility solely for the truss component design shown. The suitability and use of this component for any building is the responsibility of the Building Designer per ANSI/TPI 1 Sec. 2.
ITW-BCG: www.itwbcg.com; TPI: www.tpinst.com; WTCA: www.sbcindustry.com; ICC: www.iccsafe.org

WALTER P. FINN LICENSE No. 22839 STATE OF FLORIDA PROFESSIONAL ENGINEER
04/13/2012

TC LL	PSF	REF	CLB SUBST.
TC DL	PSF	DATE	1/1/09
BC DL	PSF	DRWG	BRCLBSUB0109
BC LL	PSF		
TOT. LD.	PSF		
DUR. FAC.			
SPACING			

Valley Detail - ASCE 7-10: 160 mph, 30' Mean Height, Enclosed, Exp. C, Kzt=1.00

Top Chord 2x4 SP #2N, SPF #1/#2, DF-L #2 or better.
Bot Chord 2x4 SP #2N or SPF #1/#2 or better.
Webs 2x4 SP #3, SPF #1/#2, DF-L #2 or better.

** Attach each valley to every supporting truss with:
(2) 16d box (0.135" x 3.5") nails toe-nailed for
ASCE 7-10 160 mph. 30' Mean Height, Enclosed
Building, Exp. C, Wind TC DL=5 psf, Kzt = 1.00
Or
ASCE 7-10 140 mph. 30' Mean Height, Enclosed
Building, Exp. D, Wind TC DL=5 psf, Kzt = 1.00

Unless specified on engineer's sealed design, apply 1x4 "T" brace, 80% length of web, same species and SRB grade or better, attached with 8d box (0.113" x 2.5") nails at 6" o.c., or continuous lateral bracing, equally spaced, for vertical valley webs greater than 7'-9".

For verticals over 10'-0" tall, apply (2) 1x4 "T" braces, 80% length of web, same species and SRB grade or better, attached with 8d box (0.113" x 2.5") nails @ 6" o.

Top chord of truss beneath valley set must be braced with:
properly attached, rated sheathing applied prior to valley truss installation.
Or
Purlins at 24" o.c. or as otherwise specified on Engineer's sealed design
Or
By valley trusses used in lieu of purlin spacing as specified on Engineer's sealed design.

*** Note that the purlin spacing for bracing the top chord of the truss beneath the valley is measured along the slope of the top chord.

++ Larger spans may be built as long as the vertical height does not exceed 14'-0".

Bottom chord may be square or pitched cut as shown.

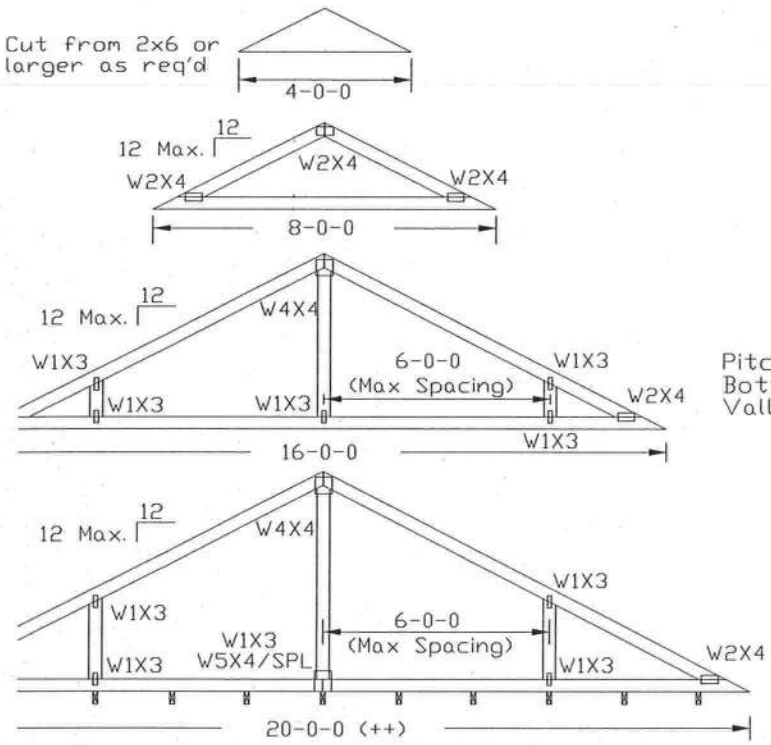

Supporting trusses at 24" o.c. maximum spacing.

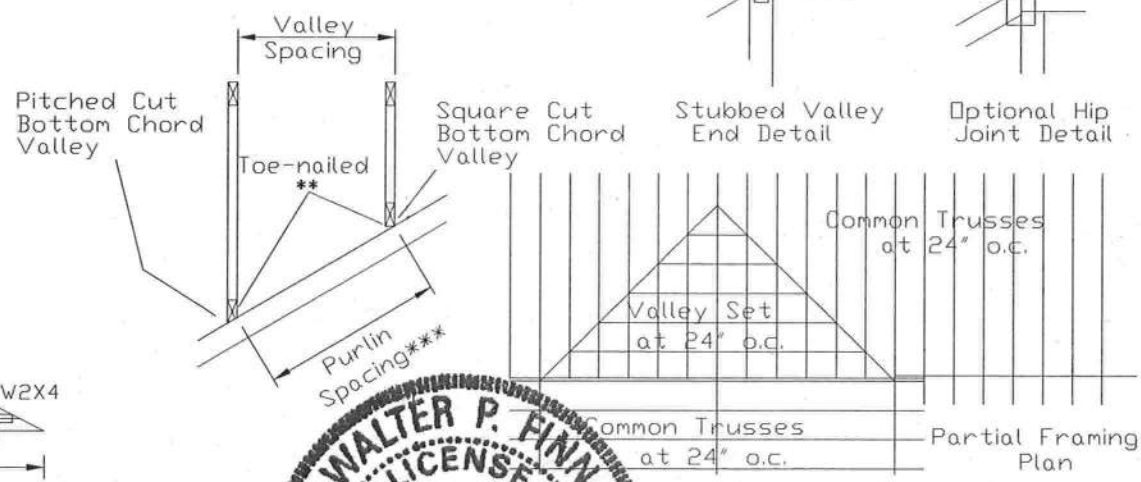

ITW Building Components Group Inc.
Earth City, MO 63045

WARNING READ AND FOLLOW ALL NOTES ON THIS DRAWING!
IMPORTANT FURNISH THIS DRAWING TO ALL CONTRACTORS INCLUDING THE INSTALLERS.

Trusses require extreme care in fabricating, handling, shipping, installing and bracing. Refer to and follow the latest edition of BCSI (Building Component Safety Information, by TPI and WTCA) for safety practices prior to performing these functions. Installers shall provide temporary bracing per BCSI. Unless noted otherwise, top chord shall have properly attached structural sheathing and bottom chord shall have a properly attached rigid ceiling. Locations shown for permanent lateral restraint of webs shall have bracing installed per BCSI sections B3, B7 or B10, as applicable. Apply plates to each face of truss and position as shown above and on the Joint Details, unless noted otherwise. Refer to drawings 160A-Z for standard plate positions.

ITW Building Components Group Inc. shall not be responsible for any deviation from this drawing, or failure to build the truss in conformance with ANSI/TPI 1, or for handling, shipping, installation & bracing of trusses. A seal on this drawing or cover page listing this drawing, indicates acceptance of professional engineering responsibility solely for the design shown. The suitability and use of this drawing for any structure is the responsibility of the Building Designer per ANSI/TPI 1 Sec.2.
For more information see this job's general notes page and these web sites:
ITWBCG: www.itwbcg.com; TPI: www.tpinst.org; WTCA: www.sbcindustry.org; ICC: www.iccsafe.org

WALTER P. FINN LICENSE No. 22839 STATE OF FLORIDA PROFESSIONAL ENGINEER
04/13/2012

TC LL	30	30	40PSF	
TC DL	20	15	7PSF	
BC DL	10	10	10 PSF	
BC LL	0	0	0PSF	
TOT. L.D.	60	55	57PSF	
DUR.FAC.	1.25/1.33	1.15	1.15	
SPACING		24.0"		

REF	VALLEY DETAIL
DATE	2/14/12
DRWG	VAL160100212

Notice of Treatment 30087

Applicator: Florida Pest Control & Chemical Co. (www.flapest .com)
Address: 563 SE DATA
City LAKE CITY Phone 752 1703

Site Location: Subdivision
Lot # Block# Permit #
Address 655 NW LONA L.

Product used	Active Ingredient	% Concentration
☑ Premise	Imidacloprid	0.1%
☐ Termidor	Fipronil	0.12%
☐ Bora-Care	Disodium Octaborate Tetrahydrate	23.0%

Type treatment: ☑ Soil ☐ Wood

Area Treated	Square feet	Linear feet	Gallons Applied
GARAGE	1200	140	100

As per Florida Building Code 104.2.6 – If soil chemical barrier method for termite prevention is used, final exterior treatment shall be completed prior to final building approval.

If this notice is for the final exterior treatment, initial this line _____.

5-14-12	10:05	DAVID FULLER
Date	Time	Print Technician's Name

Remarks:

Applicator - White Permit File - Canary Permit Holder - Pink

10/05 ©

30087 02391-013