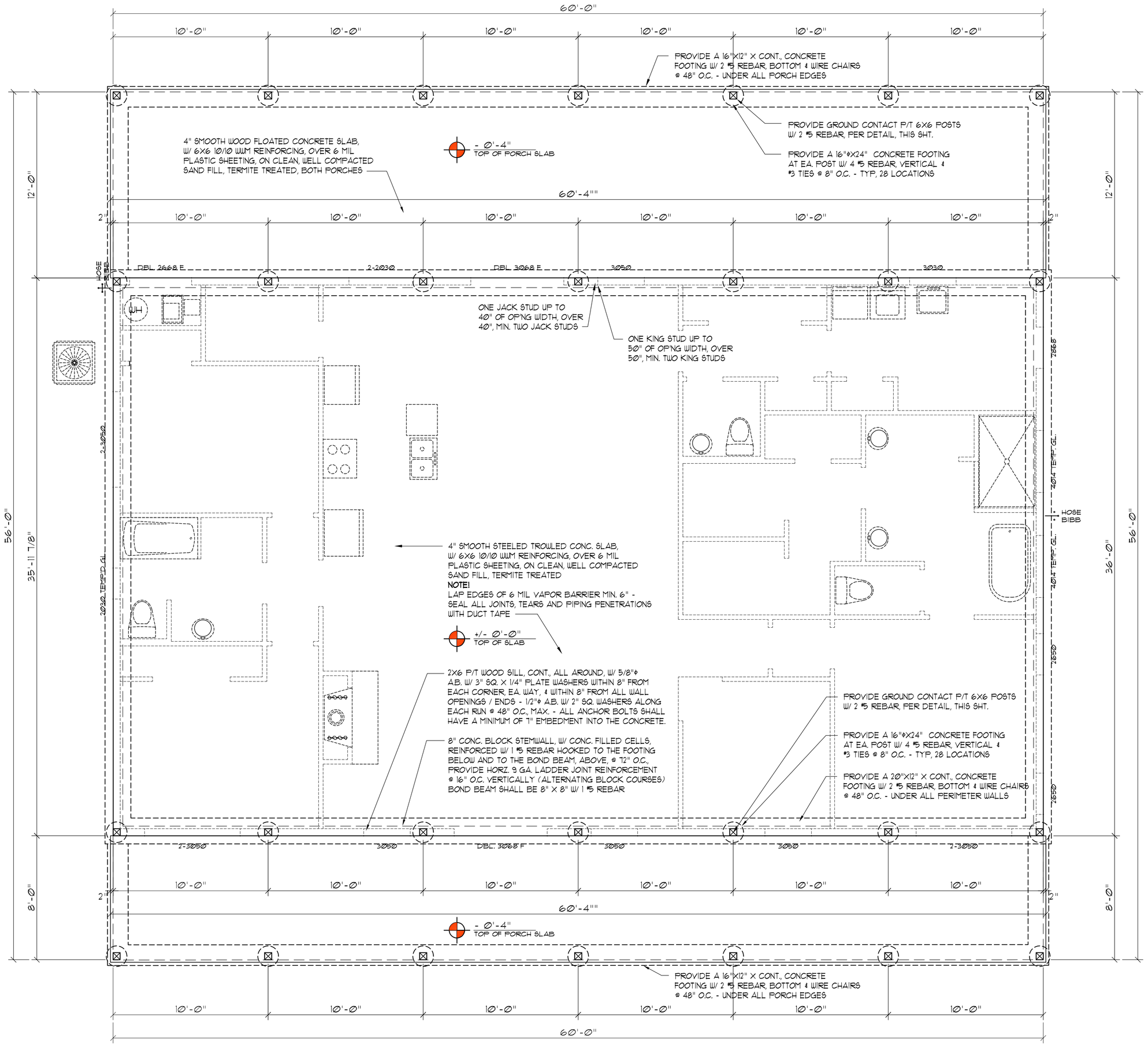

These drawings, as instruments of service, are the sole property of the architect, and may not be used, copied or reproduced in whole or in part for use on or incorporated within any other job without specific and individual authorization by the architect.

EXTERIOR WALL SHEATHING:

APPLY VERTICALLY, "WINDSTORM" 7/16" OSB 48" X 97", 109", 121" OR 145" SHEATHING. FASTEN TO THE TOP PLATE AND THE SILL PLATE WITH EITHER 6d COMMON NAILS @ 3" O.C. OR 8d COMMON NAILS @ 4" O.C. FASTEN TO EACH STUD WITH EITHER 6d COMMON NAILS @ 6" O.C. OR 8d COMMON NAILS @ 8" O.C.

Foundation PLAN

SCALE: 1/4" = 1'-0"

SHEAR WALL SEGMENTS, SEE A6
(ALL EXT. WALLS, LESS DOOR OPENINGS)

CONCRETE SLAB CURING REQUIREMENTS:

IMMEDIATELY FOLLOWING FINISH TROWELING OF THE SLAB, THE CONTRACTOR SHALL WET & COVER THE ENTIRE SLAB AREA W/ PLASTIC SHEETING. THE PLASTIC SHEETING SHALL REMAIN IN-PLACE A MINIMUM OF FOR 72 HOURS PRIOR TO THE RE-COMMENCMENT OF WORK.

NOTE!
PLUMBING CONTRACTOR SHALL PREPARE "AS-BUILT" SHOP DRAWINGS INDICATING ALL PLUMBING WORK, INCLUDING ALL PLUMBING LINE LOCATIONS AND RISER DIAGRAM - CONT'R SHALL PROVIDE 1 COPY OF AS-BUILT DWGS TO OWNER AND 1 COPY TO THE PERMIT ISSUING AUTHORITY.

NOTE!
H.V.A.C. CONTRACTOR SHALL PREPARE "AS-BUILT" SHOP DRAWINGS INDICATING ALL H.V.A.C. WORK, INCLUDING ALL DUCTWORK LOC., SIZES, LINES, EQUIPMENT SCH. & BALANCING REPORT - CONT'R SHALL PROVIDE 1 COPY OF AS-BUILT DWGS TO OWNER & 1 COPY TO THE PERMIT ISSUING AUTHORITY.

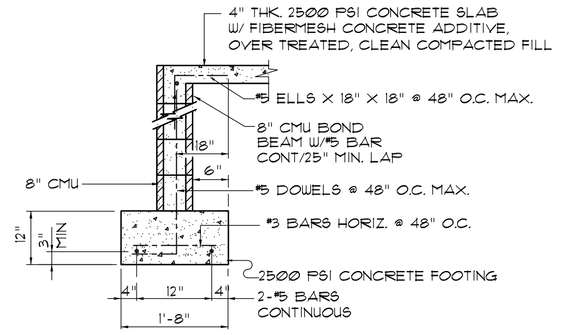

SECTION A

SCALE: 1/2" = 1'-0

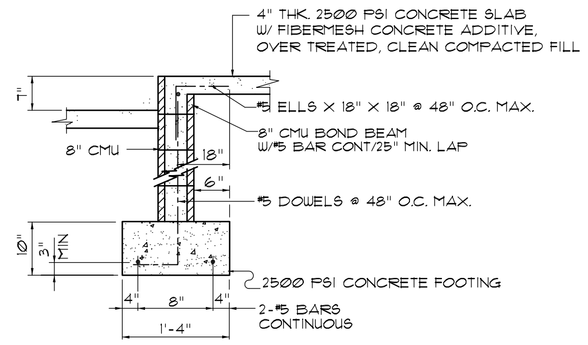

SECTION B

SCALE: 1/2" = 1'-0

CONCRETE / MASONRY / METALS GENERAL NOTES:

1. DESIGN SOIL BEARING PRESSURE: 1000 PSF.
2. EXPANSIVE SOILS: WHERE DIRECTED BY THE SOILS ENGINEER, SOIL AUGMENTATION PER THE SOILS ENGINEER'S SPECIFICATIONS SHALL BE IMPLEMENTED PRIOR TO PLACING ANY FOUNDATIONS - TESTS AS SPECIFIED SHALL BE PREFORMED TO DETERMINE THE SUITABILITY OF THE SUB-GRADE TO SUPPORT THE DESIGN LOADS.
3. CLEAN SAND FILL OVER STRIPPED AND COMPACTED EXISTING GD. SHALL BE PLACED IN 12" LIFTS, BOTH SUB-SOIL AND FILL COMPACTION SHALL BE NOT LESS THAN 98% AS MEASURED BY A MODIFIED PROCTOR TEST AT THE RATE OF ONE TEST FOR EACH 1500 SF OF BUILDING PAD AREA, OR FRACTION THEREOF, FOR EACH 12" LIFT.
4. REINFORCING STEEL SHALL BE GRADE 60 AND MEET THE REQUIREMENTS OF ASTM A615, ALL BENDS SHALL BE MADE COLD.
5. WELDED WIRE MESH SLAB REINFORCING SHALL MEET THE REQUIREMENTS OF ASTM A185 - MIN. YEILD STRESS = 85 KSI.
6. CONCRETE SHALL BE STANDARD MIX F'c = 3000 PSI FOR ALL FTGS, SLABS, COLUMNS AND BEAMS OR SHALL BE STANDARD PUMP MIX F'c = 3000 PSI. STRENGTH SHALL BE ATTAINED WITHIN 28 DAYS OF PLACEMENT. MIXING, PLACING AND FINISHING SHALL BE AS PER ACI STANDARDS.
7. CONCRETE BLOCK SHALL BE AS PER MANUFACTURER'S PRODUCT GUIDE FOR ASTM C-90 REQUIREMENTS WITH MEDIUM SURFACE FINISH - F'm = 1500 PSI.
8. MORTAR SHALL BE TYPE "M" OR "N" FOR ALL MASONRY UNITS.
9. STRUCTURAL STEEL SHALL CONFORM TO ASTM A36 STANDARDS FOR STRENGTH, BOLTS SHALL BE ASTM A307 / GRADE 1 OR A325, AS PER PLAN REQUIREMENTS.
10. WELDS SHALL BE AS PER "AMERICAN WELDING SOCIETY" STANDARDS FOR STRUCTURAL STEEL APPLICATIONS.

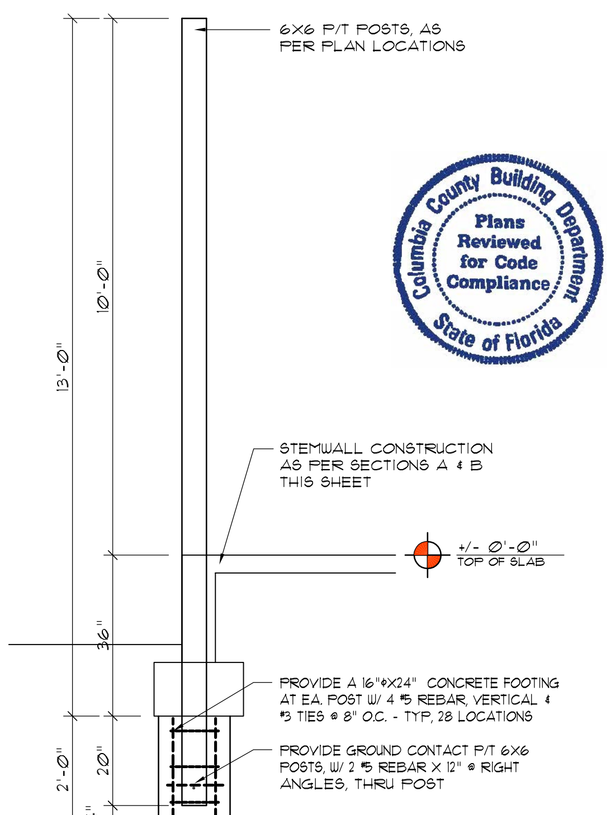

DETAIL C

SCALE: 1/2" = 1'-0

NOTE!
THE DESIGN WIND SPEED FOR THIS PROJECT IS 130 MPH PER 2023 FBC 1609 AND LOCAL JURISDICTION REQUIREMENTS

NOTE!
ADDED FILL SHALL BE APPLIED IN 8" LIFTS - EA. LIFT SHALL BE COMPACTED TO 98% DRY COMPACTION PER THE "MODIFIED PROCTOR" METHOD.

NOTE!
PRIOR TO THE CONSTRUCTION OF THE FOUNDATION, THE CONTRACTOR SHALL COORDINATE ANY INTERIOR BEARING LOCATION CONDITIONS PER THE TRUSS ENGINEERED SHOP DRAWINGS WITH THE FOUNDATION PLAN. ANY INTERIOR BEARING LOCATIONS OR ANY POINT LOADS OF 4.0 K OR GREATER SHALL BE SUPPORTED VIA A MODIFIED FOUNDATION PLAN TAKING THESE LOADS INTO CONSIDERATION. THE CONTRACTOR SHALL MAKE THE ENGINEERED TRUSS SHOP DRAWINGS AVAILABLE TO THE ARCHITECT FOR THE PURPOSE OF RENDERING SUCH MODIFICATIONS PRIOR TO POURING ANY CONCRETE.

CONSTRUCTION NOTES

1. FIELD VERIFY ALL DIMENSIONS AND MATERIALS. ALL OUTSIDE DIMENSIONS ARE TO FACE OF FOUNDATION.
2. ALL NAILING CONSTRUCTION MATERIALS SHALL BE AS PER 2001 FBC - SEE A6
3. PROVIDE EXTERIOR COMBUSTION AIR TO GAS FIRED H.V.A.C. EQUIPMENT, WOOD BURNING STOVES, AND FIREPLACES.
4. VENT CLOTHES DRYER, BATH, AND COOKING FANS TO EXTERIOR AS REQUIRED.
5. CONTRACTOR SHALL CALL ATTENTION TO THE DESIGNER, ANY DISCREPANCIES IN DRAWINGS AND/OR SPECIFICATIONS AND SHALL RECEIVE INSTRUCTIONS OR CLEARIFACATIONS BEFORE PROCEEDING WITH THE PORTION OF THE WORK IN QUESTION.
6. ROOF & FLOOR TRUSS FRAMING PLANS ARE FOR GENERAL INFORMATION ONLY. THE TRUSS MANUFACTURER SHALL PROVIDE A DETAILED LAYOUT FOR TRUSS AND FRAMING MEMBERS.
7. SHOULD CONDITIONS AT THE SITE BE FOUND MATERIALLY DIFFERENT FROM THOSE INDICATED BY THE DRAWINGS AND/OR SPECIFICATIONS, AND THE CONDITIONS USUALLY INHERENT IN THE WORK OF THE CHARACTER SHOWN AND SPECIFIED BE DIFFERENT FROM THE DESIGNERS RECOMMENDED BUILDING PROCEDURES; CALL IMMEDIATE ATTENTION TO SUCH CONDITIONS BEFORE PROCEEDING.
8. LP GAS-BURNING APPLIANCES ARE NOT PERMITTED IN BASEMENTS OR CRAWLSPACES.
9. DO NOT SCALE DRAWINGS. USE PRINTED DIMENSIONS ONLY.

Columbia County Building Department
Plans Reviewed for Code Compliance
State of Florida

N. P. GEISLER
Digitally signed by N. P. GEISLER
DN: c=US, o=N. P. GEISLER, ou=AR0007005
OU = ARCHITECT
Date: 2024.07.30 15:04:52 -05'00'

REVISION:

Copyright 2024 N.P. Geisler, Architect

DRAWN: NPG

CUSTOM RESIDENTIAL DESIGN for:
FLOYD FAMILY
COLUMBIA COUNTY, FLORIDA
FOUNDATION PLAN

Celebrating 52 Years of Service
1972 - 2024
N.P. Geisler, Architect
AR0007005

CUSTOM ARCHITECTURAL DESIGN

NICHOLAS PAUL GEISLER
ARCHITECT
1758 NW Brown Rd.
Lake City, FL 32055
386-365-4355

DATE: 22 JUL 2024
COMM: 2K2418

SHEET: S.2
2 OF 5

AR0007005