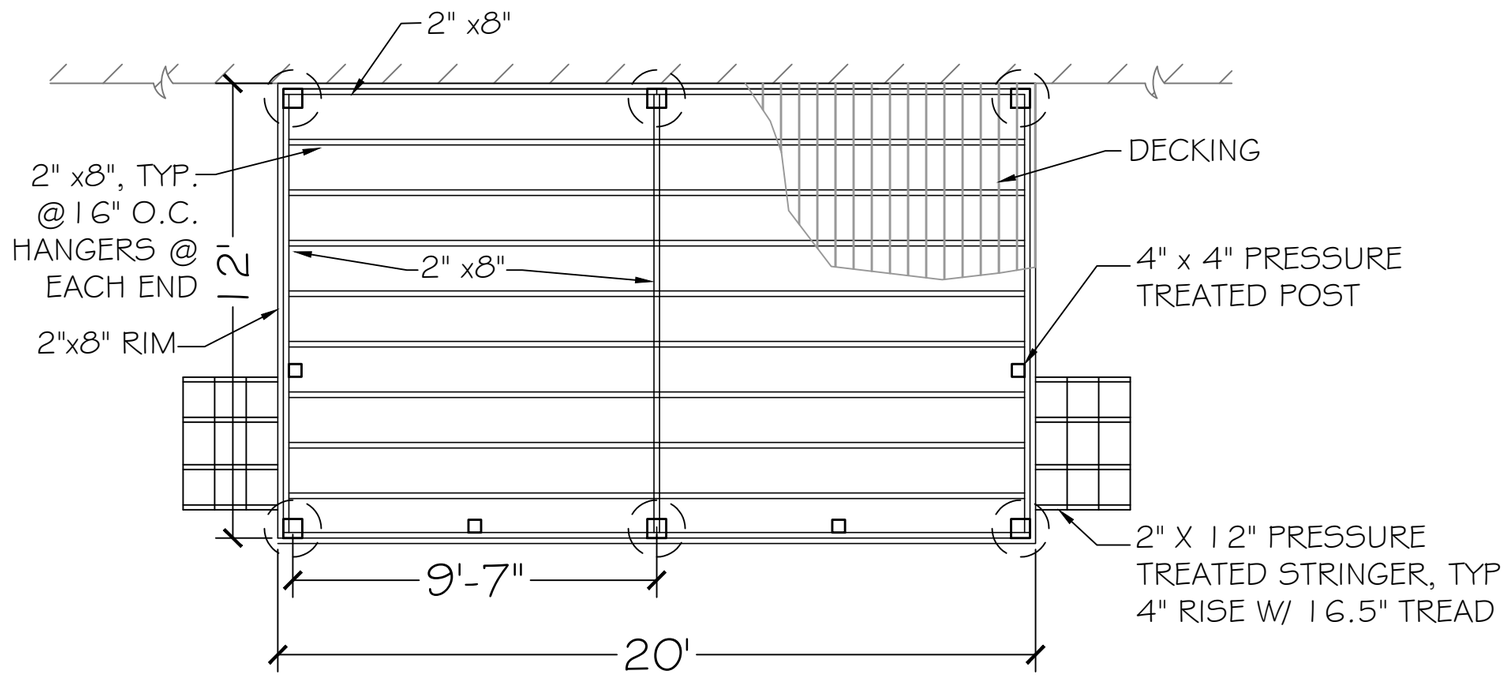

SCALE: 1/4" = 1'

DECK PLAN

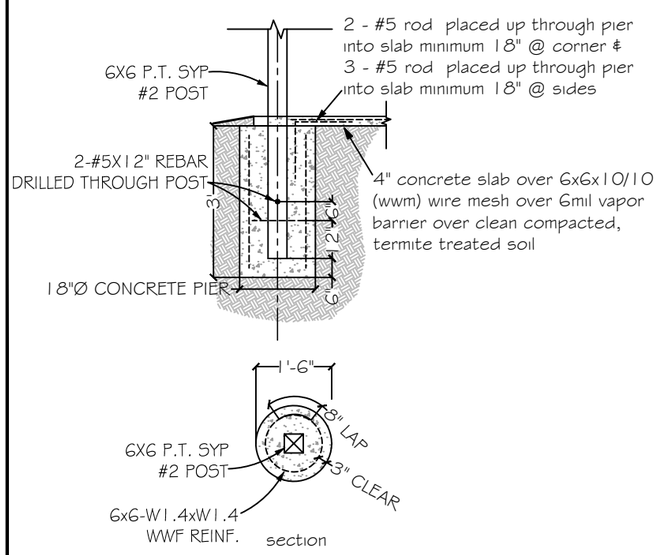

G Embedded post detail

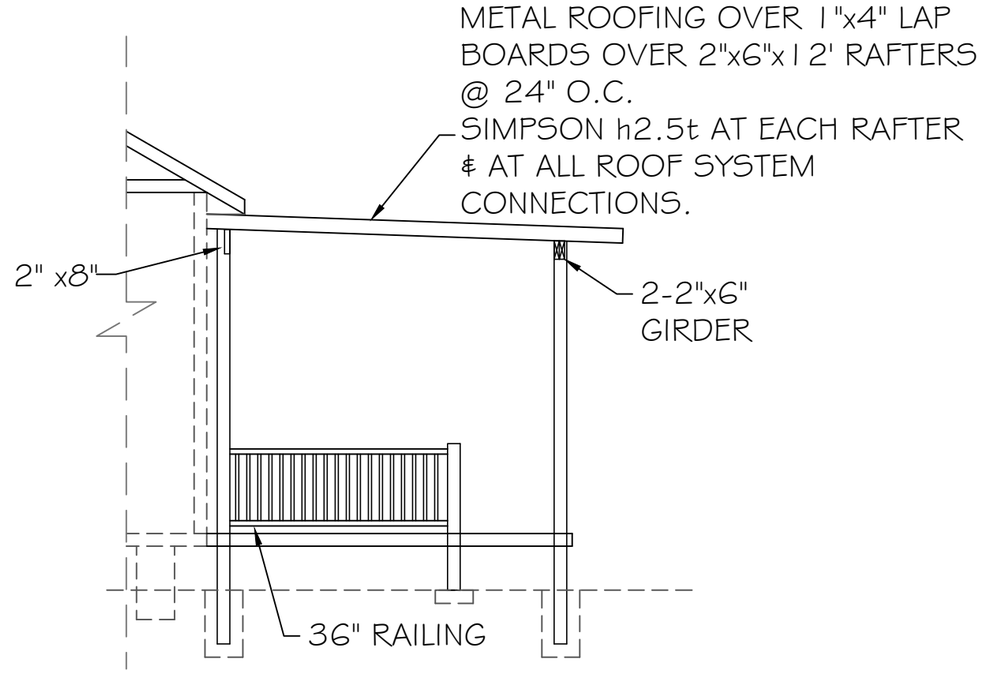

CROSS-SECTION

NOT TO SCALE

Carol Chadwick, PE
cn=Carol Chadwick, PE, o=This item has been electronically signed and sealed by Carol Chadwick, PE using a digital signature., ou, email=ccpewyo@gmail.com, c=US
2020.08.28 16:15:38 -04'00'

CAROL CHADWICK P.E.
FLORIDA ♦ WYOMING ♦ N.C.E.E.S.
OREGON ♦ CALIFORNIA ♦ N.C.E.E.S.

CAROL J. CHADWICK
LICENSE
No. 82560
STATE OF
FLORIDA
PROFESSIONAL ENGINEER

DATE	REVISION DESCRIPTION

PREPARED FOR
SNS ENTERPRISES
386.249.4066
snsenterprnsesonf@gmail.com

DENISE ORR
DECK PLAN
4984 SE BURLY AVE., LAKE CITY, FL

PROJECT NO. FL20169
DATE AUG. 28, 2020
REVISION DATE
SHEET S-1