(PART OF HILLCREST UNR): COMM AT
E 250.85 FT FOR POB, CONT E 417.
664.80 FT S 67 DG W 204.74 FT, N

CURTIS TONY M/CURTIS CAROLYN B
P O BOX 2922
LAKE CITY, FL 32056

2025

33-4S-17-08944-024

COLUMBIA COUNTY PROPERTY

BUILDING CHARACTERISTICS

ELEMENT	CD	CONSTRUCTION
Exterior Wall	32	HARDIE BRD 100
Roof Structur	08	IRREGULAR 100
Roof Cover	03	COMP SHNGL 100
Interior Wall	05	DRYWALL 100
Interior Floo	12	HARDWOOD 80
Interior Floo	15	HARDTILE 20
Air Condition	03	CENTRAL 100
Heating Type	04	AIR DUCTED 100
Bedrooms		3 100
Bathrooms		2.5 100
Frame	02	WOOD FRAME 100
Stories	2.	2. 100
Architectual	05	CONV 100
Units		0 100
Quality	07	07

DOR CODE	0100	SINGLE FAMILY	
MAP NUM		MKT AREA	02
NEIGHBORHOOD/LOC	33417.00	1.00/	

AREA TYPE	TOTAL GROSS AREA	PCT OF BASE	TOT ADJ AREA	SUBAREA MARKET VALUE
BAS	1,362	100	1,362	163,734
FGR	696	55	383	46,043
FOP	120	30	36	4,327
FUS	528	100	528	63,474
UOP	200	20	40	4,808
UOP	216	20	43	5,169
UST	450	45	202	24,284
TOTALS	3,572		2,594	311,839

MARKET ADJUSTMENTS

TYPE	MDL	EFF. AREA	TOT ADJ PTS	EFF. BASE RATE	REPL. COST NEW	AYB	EYB	ECON	FNCT		NORM	% COND
0100	01	2,594	134.6961	141.43	366,869	2008	2008	0	0	0	15.00	85.00

1 SINGLE FAM – 100% - 2010 Heated Area: 1890 HX Base Yr 2010

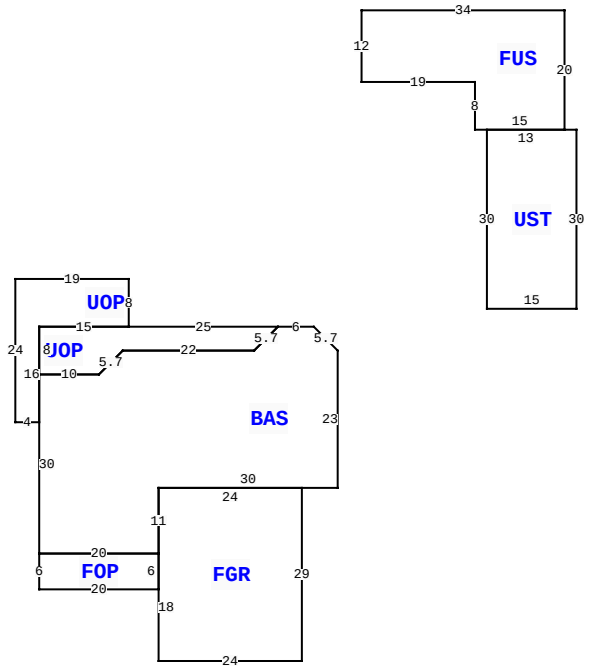

209 SW FAIRLINGTON CT, LAKE CITY

BLD DATE		LGL DATE	
XF DATE		LAND DATE	05/16/2024 MLU
INC DATE		AG DATE	

VALUATION SUMMARY

VALUATION BY		STANDARD
Tax Group: 3	Tax Dist:	
BUILDING MARKET VALUE		311,839
TOTAL MARKET OB/XF VALUE		7,585
TOTAL LAND VALUE - MARKET		46,170
TOTAL MARKET VALUE		365,594
SOH/AGL Deduction		118,635
ASSESSED VALUE		246,959
TOTAL EXEMPTION VALUE	HX HB	50,000
BASE TAXABLE VALUE		196,959
TOTAL JUST VALUE		365,594
NCON VALUE		0
INCOME VALUE		
PREVIOUS YEAR MKT VALUE		365,594

PERMIT NUM	DESCRIPTION	AMT	ISSUED
27301	SFR	979	08/28/2008

SALES DATA

OFF RECORD Number	DATE	TYPE INST	Q / U	V / I	RSN CD	SALE PRICE
1152/1655	6/13/2008	WD	Q	V		45,000
GRANTOR: MARC & JEANINE CHARLE						
GRANTEE: TONY & CAROLYN CURT						
1041/0861	3/15/2005	WD	Q	V		39,500
GRANTOR: PETER W GIEBEIG						
GRANTEE: MARC & JEANINE CHAR						

BUILDING NOTES

BUILDING DIMENSIONS

BAS= N23 L4 U4 W6 UOP= W25 UOP= N8 W19 S24 E4 N16 E15$ W15 S8 E10 R4 U4 E22 R4 U4 $ D4 L4 W22 D4 L4 W10 S30 FOP= S6 E20 N6 W20$ E20 FGR= S18 E24 N29 W24 S11$ N11 E30$ PTR= N30 E40 UST= N30 W2 FUS= N20 W34S12 E19 S8 E15$ W13 S30 E15 $ S30 W40$.

EXTRA FEATURES

LN	OB/XF CODE	DESCRIPTION	BLD	CAP	L	W	UNITS	UT	Adj R	ADJ UNIT PRICE	ORIG COND	YEAR ON	YEAR ACTUAL	Q	% COND	OB/XF MKT VALUE	NOTES
1	0180	FPLC 1STRY	0	100	0	0	1.00	UT	2,000.00	2,000.00	100	2009	2009	3	100	2,000	
2	0166	CONC,PAVMT	0	100	0	0	2,482.00	UT	2.25	2.25	100	2009	2009	3	100	5,585	

LAND DESCRIPTION

TOTAL OB/XF 7,585

LN	USE CODE	CLS	LAND USE DESCRIPTION	CAP	RD	LOC ZONE	FRONT	DEPTH	TOT LND UTS	UNIT TYPE	DT	DPTH FACT	% COND	TOT ADJ	UNIT PRICE	ADJ UNIT PRICE	LAND VALUE	OTHER ADJUSTMENTS AND NOTES	YEAR	DENSITY	DECL	FRZ	YR	CONSRV
1	0100	C	SFR	100		A-1	0.00	0.00	5.13	AC		1.00	1.00	0.90	10,000.00	9,000.00	46,170							

REVIEW DATE 07/11/2017 BY DF Total Acres: 5.13 Total Land Value: 46,170 Market: 0 Agricultural: 0 Common: 46,170 PRINTED 01/01/2025 BY SYS