| SYSTEM INFORMATION | |
|---|---|
| MODULE | HANWHA Q.PEAK DUO BLK ML-G10+ 410 |
| INVERTER | ENPHASE IQ8MC-72-M-US |
| RACKING | UNIRAC NXT HORIZON 2-RAIL RACKING SYSTEM |
| SYSTEM SIZE (DC) | 11.48 KW |
| LOCATION | 30.1804777,-82.6073771 |

| CLIMATIC & GEOGRAPHIC DESIGN CRITERIA TABLE R301.2(1) | |
|---|---|
| SPEED (MPH) | 120 |
| TOPOGRAPHIC EFFECTS | B |
| SPECIAL WIND REGION | NO |
| WIND BORNE DEBRIS ZONE | 2 |
| SEISMIC DESIGN CATEGORY | C |
| CLIMATE ZONE | 2A |
| WIND EXPOSURE CATETORY | B |

| PLAN KEY | |
|---|---|
| PV-1 | COVER PAGE |
| PV-1.1 | ATTACHMENT DETAIL |
| PV-1.1(2) | ATTACHMENT DETAIL |
| PV-1.2 | INVERTER SPECS |
| PV-1.3 | COMBINER SPECS |
| PV-1.4 | PANEL SPECS |
| PV-2 | PANEL LAYOUT |
| PV-3 | ELETRICAL |
| PV-3.1 | ELECTRICAL CONT. |
| PV-3.2 | EQUIPMENT LABELS |
| | |

## GENERAL NOTES:

THIS PV SYSTEM HAS BEEN DESIGNED TO MEET THE MINIMUM DESIGN STANDARDS FOR BUILDING AND OTHER STRUCTURES OF THE ASCE 7-22, 8TH EDITION 2023 FLORIDA RESIDENTIAL CODE, 8TH EDITION 2023 FLORIDA BUILDING CODE, 8TH EDITION 2023 FLORIDA FIRE PREVENTION CODE, NEC 2020 AND ALL LOCAL CODES & ORDINANCES.

ROOF SHALL HAVE NO MORE THAN TWO LAYERS OF COVERING IN ADDITION TO THE SOLAR EQUIPMENT.

INSTALLATION OF SOLAR EQUIPMENT SHALL BE FLUSH MOUNTED, PARALLEL TO AND NO MORE THAN 6-INCHES ABOVE THE SURFACE OF THE ROOF.

ANY PLUMBING VENTS ARE NOT TO BE CUT OR COVERED FOR SOLAR EQUIPMENT INSTALLATION. ANY RELOCATION OR MODIFICATION OF THE VENT REQUIRES A PLUMBING PERMIT AND INSPECTION.

ALL DESIGN, CALCULATIONS ARE PERFORMED BY MICHAEL S. REZK, P.E. PROFESSIONAL ENGINEER, WITH LICENCE No. 95844.

## INVERTER PLACEMENT:

SYSTEM UTILIZES "ENPHASE" MICRO-INVERTERS WITH RAPID SHUTDOWN CONTROL LOCATED ON THE BACK SIDE OF EACH MODULE.

## STRUCTURAL STATEMENT:

THE EXISTING STRUCTURE IS ADEQUATE TO SUPPORT THE NEW LOADS IMPOSED BY THE PHOTOVOLTAIC MODULE SYSTEM INCLUDING UPLIFT & SHEAR.EXISTING RAFTER SIZES & DIMENSIONS CONFORM TO 8TH EDITION 2023 FLORIDA RESIDENTIAL CODE

MOUNTING BRACKETS AND HARDWARE MEET OR EXCEED FLORIDA CODE REQUIREMENTS FOR THE DESIGN CRITERIA OF THE TOWN.

## FSEC CERTIFICATION STATEMENT:

PER FL. STATUE 377.705 , I, MINA A. MAKAR PE# 86753, CERTIFICATE OF AUTHORIZATION #33404, AN ENGINEER LICENSED PURSUANT TO CHAPTER 471,CERTIFY THAT THE PV ELECTRICAL SYSTEM AND ELECTRICAL COMPONENTS ARE DESIGNED AND APPROVED USING THE STANDARDS CONTAINED IN THE MOST RECENT VERSION OF THE FLORIDA BUILDING CODE. FBC 2023

FBC, RESIDENTIAL 2023

TABLE R301.2.1.3

WIND SPEED CONVERSIONS[a]

| $V_{ult}$ | 110 | 115 | 120 | 130 | 140 | 150 | 160 | 170 | 180 | 190 | 200 |
|---|---|---|---|---|---|---|---|---|---|---|---|
| $V_{asd}$ | 85 | 89 | 93 | 101 | 108 | 116 | 124 | 132 | 139 | 147 | 155 |

For SI: 1 mile per hour = 0.447 m/s.

a. Linear interpolation is permitted.

HANWHA Q.PEAK DUO BLK ML-G10+ 410
410 WATT MODULE
74" X 41.1" X 1.26"
(SEE DATASHEET)

| BILL OF MATERIALS | |
|---|---|
| MODULES | 28 |
| INVERTERS | 28 |
| L-FOOT ATTACHMENT W/ UNIRAC NXT | 56 |
| 171" RAILS | 13 |
| | |
| ENPHASE COMBINER BOX | 1 |
| EATON 60A FUSIBLE AC DISCONNECT | 1 |
| 50A FUSES | 2 |
| 125A LINE TAPS | 2 |
| | |
| | |
| | |
| | |

momentum SOLAR

PRO CUSTOM SOLAR LLC D.B.A. MOMENTUM SOLAR
325 HIGH STREET, METUCHEN, NJ 08840
(732) 902-6224
MOMENTUMSOLAR.COM

**PROFESSIONAL ENGINEERING**

MINA A. MAKAR
LICENSE
No PE86753
STATE OF FLORIDA
PROFESSIONAL ENGINEER

Digitally signed by
Reason: Digitally signed by Mina A Makar. Reason: This item has been electronically signed and sealed by [Mina A. Makar, PE 86753, COA # 33404] on the Date and Time Stamp shown using a digital signature. Printed copies of this document are not considered signed and sealed and the signature must be verified on any electronic copies
Date: 2024.08.02 09:08:33 -05:00

Digitally signed by Mina A Makar. Reason: This item has been electronically signed and sealed by [Mina A. Makar, PE 86753, COA # 33404] on the Date and Time Stamp shown using a digital signature. Printed copies of this document are not considered signed and sealed and the signature must be verified on any electronic copies

**SOLAR CONTRACTOR**

CAMERON CHRISTENSEN
CERTIFIED SOLAR CONTRACTOR LICENSE NUMBER: CVC57036
MOMENTUM SOLAR
5728 MAJOR BLVD. SUITE 307, ORLANDO FL. 32819

**CUSTOMER INFORMATION**

BARBARA JEFFERSON - MS155362
564 SE DEFENDER DR
LAKE CITY, FL 32025
(386) 292-2541

**PV SYSTEM INFORMATION**

SYSTEM SIZE (DC ): 11.48 KW
28 MODULES: HANWHA Q.PEAK DUO BLK ML-G10+ 410
28 INVERTERS: ENPHASE IQ8MC-72-M-US

**PROJECT INFORMATION**

| | | |
|---|---|---|
| INITIAL | DATE: 8/1/2024 | DESIGNER: AKL |
| REV: | DATE: | DESIGNER: |
| REV: | DATE: | DESIGNER: |

COVER PAGE

**PV-1**

| PART # TABLE | | |
|---|---|---|
| P/N | DESCRIPTION | LENGTH |
| 084RLM1 | NXT HORIZON RAIL 84" MILL | 84" |
| 084RLD1 | NXT HORIZON RAIL 84" DARK | 84" |
| 168RLM1 | NXT HORIZON RAIL 168" MILL | 168" |
| 168RLD1 | NXT HORIZON RAIL 168" DARK | 168" |
| 208RLM1 | NXT HORIZON RAIL 208" MILL | 208" |
| 208RLD1 | NXT HORIZON RAIL 208" DARK | 208" |
| 246RLM1 | NXT HORIZON RAIL 246" MILL | 246" |
| 246RLD1 | NXT HORIZON RAIL 246" DARK | 246" |

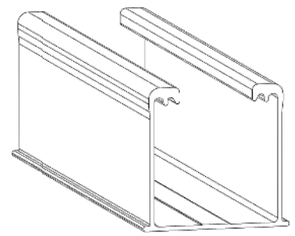

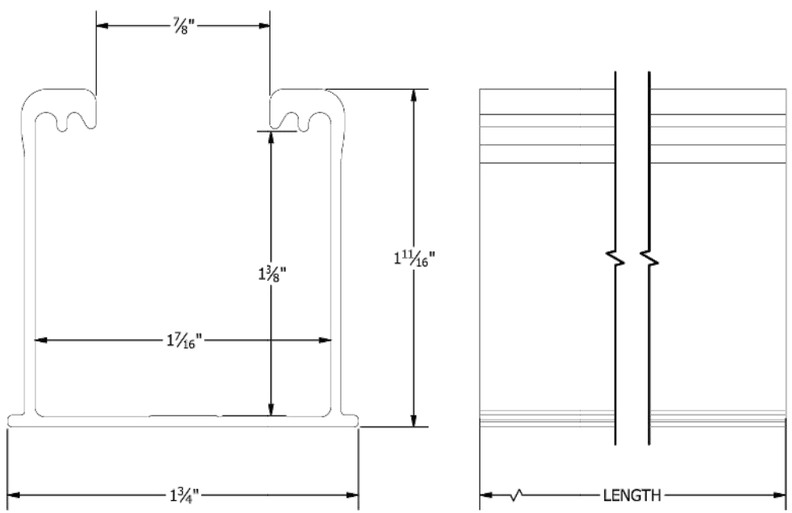


UNIRAC
1411 BROADWAY BLVD. NE
ALBUQUERQUE, NM 87102 USA
PHONE: 505.242.6411
WWW.UNIRAC.COM

| | |
|---|---|
| PRODUCT LINE: | NXT HORIZON |
| DRAWING TYPE: | PART DETAIL |
| DESCRIPTION: | RAIL |
| REVISION DATE: | 9/13/2021 |

DRAWING NOT TO SCALE
ALL DIMENSIONS ARE NOMINAL

PRODUCT PROTECTED BY ONE OR MORE US PATENTS
LEGAL NOTICE

NH-P01
SHEET

| PART # TABLE | | |
|---|---|---|
| P/N | DESCRIPTION | LENGTH |
| RLSPLCM1 | NXT HORIZON RAIL SPLICE | 10" |

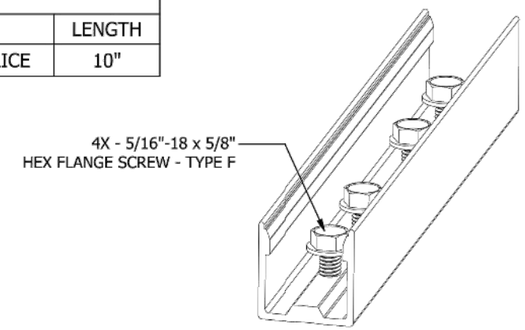


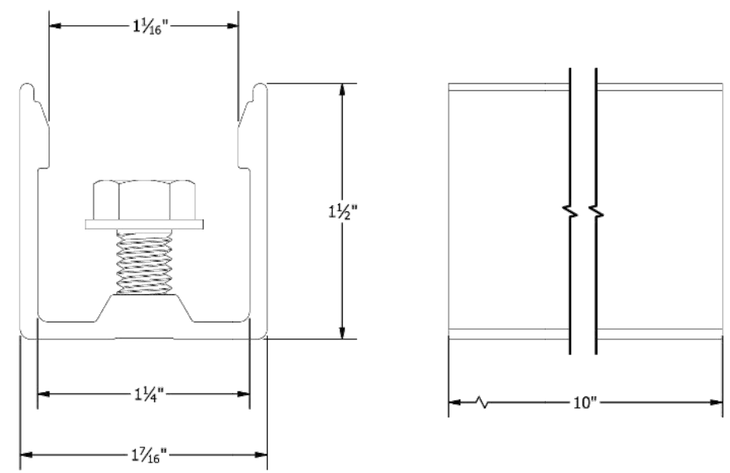


UNIRAC
1411 BROADWAY BLVD. NE
ALBUQUERQUE, NM 87102 USA
PHONE: 505.242.6411
WWW.UNIRAC.COM

| | |
|---|---|
| PRODUCT LINE: | NXT HORIZON |
| DRAWING TYPE: | PART DETAIL |
| DESCRIPTION: | RAIL SPLICE |
| REVISION DATE: | 9/22/2021 |

DRAWING NOT TO SCALE
ALL DIMENSIONS ARE NOMINAL

PRODUCT PROTECTED BY ONE OR MORE US PATENTS
LEGAL NOTICE

NH-P02
SHEET

momentum SOLAR

PRO CUSTOM SOLAR LLC D.B.A. MOMENTUM SOLAR
325 HIGH STREET, METUCHEN, NJ 08840
(732) 902-6224
MOMENTUMSOLAR.COM

**PROFESSIONAL ENGINEERING**

MINA A. MAKAR
LICENSE
No PE86753
STATE OF FLORIDA
PROFESSIONAL ENGINEER

Digitally signed by
Reason: Digitally signed by Mina A Makar. Reason: This item has been electronically signed and sealed by [Mina A. Makar, PE 86753, COA # 33404] on the Date and Time Stamp shown using a digital signature. Printed copies of this document are not considered signed and sealed and the signature must be verified on any electronic copies
Date: 2024.08.02 09:08:33 -05:00

Digitally signed by Mina A Makar.
Reason: This item has been electronically signed and sealed by [Mina A. Makar, PE 86753, COA # 33404] on the Date and Time Stamp shown using a digital signature. Printed copies of this document are not considered signed and sealed and the signature must be verified on any electronic copies

**SOLAR CONTRACTOR**

CAMERON CHRISTENSEN
CERTIFIED SOLAR CONTRACTOR LICENSE NUMBER: CVC57036
MOMENTUM SOLAR
5728 MAJOR BLVD. SUITE 307, ORLANDO FL. 32819

**CUSTOMER INFORMATION**

BARBARA JEFFERSON - MS155362
564 SE DEFENDER DR
LAKE CITY, FL 32025
(386) 292-2541

**PV SYSTEM INFORMATION**

SYSTEM SIZE (DC ): 11.48 KW
28 MODULES: HANWHA Q.PEAK DUO BLK ML-G10+ 410
28 INVERTERS: ENPHASE IQ8MC-72-M-US

**PROJECT INFORMATION**

| | | |
|---|---|---|
| INITIAL | DATE: 8/1/2024 | DESIGNER: AKL |
| REV: | DATE: | DESIGNER: |
| REV: | DATE: | DESIGNER: |

ATTACHMENT DETAIL

**PV-1.1**

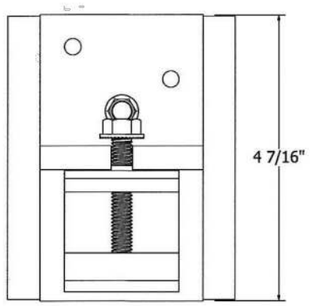


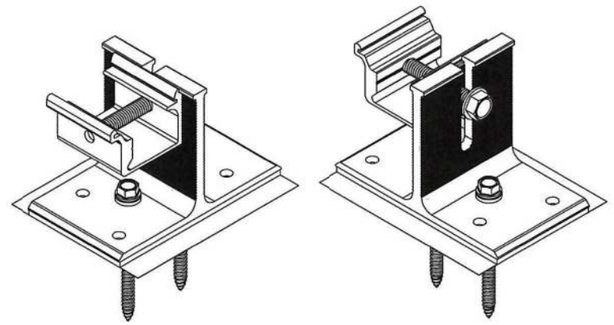

BUTYL ATTACHMENT ASSEMBLY

**PRODUCT REVISED**
as complying with the Florida Building Code
NOA-No. 23-1010.11
Expiration Date 07/13/2028
By
Miami-Dade Product Control

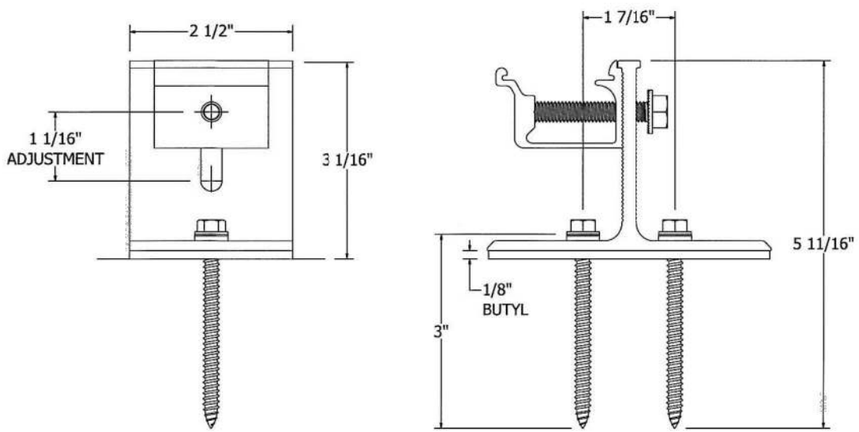


STRONGHOLD BUTYL ATTACHMENT

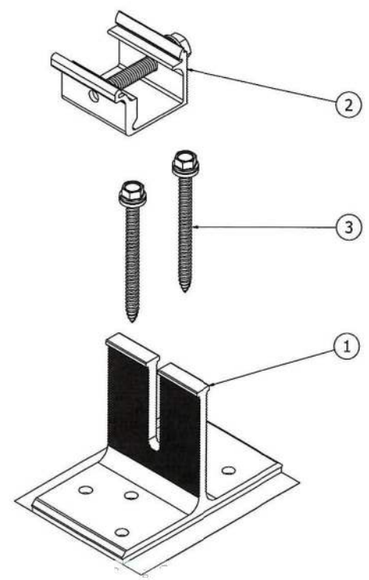


| ASSEMBLY NUMBER - NAME | ITEM # | DESCRIPTION | MATERIAL | MINIMUM YIELD (KSI) | MINUMUM ULTIMATE (KSI) |
|---|---|---|---|---|---|
| SHBUTYLD2 SHBUTYLM2 | 1 | DTD BUTYL ATT ASSEMBLY | CAST ALUMINUM A380 | 23 | 47 |
| | 2 | RAIL CLAMP ASSEMBLY | 18/8 STAINLESS STEEL | N/A | 85 |
| | 3 | HWHD EPDM ASSEMBLY, 3.0" | 300 SERIES STAINLESS STEEL | N/A | 70 |

SADDAM AHMAD LICENSE No. 75316 STATE OF FLORIDA PROFESSIONAL ENGINEER

PE STAMP:

PE SIGNATURE:

PE DATE: 8/24/23

UNIRAC
1411 BROADWAY BOULEVARD NE
ALBUQUERQUE, NM, USA, 87102
WWW.UNIRAC.COM

REVISIONS

| REV | DATE | DESCRIPTION | CHK |
|---|---|---|---|
| A | 4/05/23 | INITIAL RELEASE | - |
| B | 5/08/23 | REVISED | AB |
| C | 6/13/23 | REMOVED SHEETS 6 THRU 10 | NM |
| D | 8/22/23 | SHBUTYLD2, M2 WAS SBUTYLD1, M1 | NM |

FOR
MIAMI-DADE COUNTY

PROJECT
MIAMI-DADE CO. NOA

PROJECT ADDRESS

TITLE
NXT STRONGHOLD BUTYL ATTACHMENT

DWG NO.
M-D NOA NXT

SHEET 1 OF 5

ATTACHMENT DETAIL FOR CORRUGATED METAL ROOF

momentum SOLAR

PRO CUSTOM SOLAR LLC D.B.A. MOMENTUM SOLAR
325 HIGH STREET, METUCHEN, NJ 08840
(732) 902-6224
MOMENTUMSOLAR.COM

**PROFESSIONAL ENGINEERING**

MINA A. MAKAR LICENSE No PE86753 STATE OF FLORIDA PROFESSIONAL ENGINEER

Digitally signed by
Reason: Digitally signed by Mina A Makar. Reason: This item has been electronically signed and sealed by Mina A. Makar, PE 86753, COA # 33404] on the Date and Time Stamp shown using a digital signature. Printed copies of this document are not considered signed and sealed and the signature must be verified on any electronic copies
Date: 2024.08.02 09:08:33 -05:00

**SOLAR CONTRACTOR**
CAMERON CHRISTENSEN
CERTIFIED SOLAR CONTRACTOR LICENSE NUMBER: CVC57036
MOMENTUM SOLAR
5728 MAJOR BLVD. SUITE 307, ORLANDO FL. 32819

**CUSTOMER INFORMATION**
BARBARA JEFFERSON - MS155362
564 SE DEFENDER DR
LAKE CITY, FL 32025
(386) 292-2541

**PV SYSTEM INFORMATION**
SYSTEM SIZE (DC ): 11.48 KW
28 MODULES: HANWHA Q.PEAK DUO BLK ML-G10+ 410
28 INVERTERS: ENPHASE IQ8MC-72-M-US

**PROJECT INFORMATION**

| | | |
|---|---|---|
| INITIAL | DATE: 8/1/2024 | DESIGNER: AKL |
| REV: | DATE: | DESIGNER: |
| REV: | DATE: | DESIGNER: |

ATTACHMENT DETAIL

**PV-1.1 (2)**

ENPHASE.

DATA SHEET

# IQ8MC Microinverter

Our newest IQ8 Series Microinverters are the industry's first microgrid-forming*, software-defined microinverters with split-phase power conversion capability to convert DC power to AC power efficiently. The brain of the semiconductor-based microinverter is our proprietary application-specific integrated circuit (ASIC), which enables the microinverter to operate in grid-tied or off-grid modes. This chip is built in advanced 55-nm technology with high-speed digital logic and has superfast response times to changing loads and grid events, alleviating constraints on battery sizing for home energy systems.

Part of the Enphase Energy System, IQ8 Series Microinverters integrate with the IQ Battery, IQ Gateway, and the Enphase App monitoring and analysis software.

Enphase 25 year limited warranty

IQ8 Series Microinverters redefine reliability standards with more than one million cumulative hours of power-on testing, enabling an industry-leading limited warranty of up to 25 years.

Connect PV modules quickly and easily to the IQ8 Series Microinverters that have integrated MC4 connectors.

UL CERTIFIED SAFETY

IQ8 Series Microinverters are UL Listed as PV rapid shutdown equipment and conforms with various regulations when installed according to the manufacturer's instructions.

*Meets UL 1741 only when installed with IQ System Controller 2 or 3.

© 2024 Enphase Energy. All rights reserved. Enphase, the e and CC logos, IQ, and certain other marks listed at https://enphase.com/trademark-usage-guidelines are trademarks of Enphase Energy, Inc. in the U.S. and other countries. Data subject to change.

### Easy to install

- Lightweight and compact with plug-and-play connectors
- Power line communication (PLC) between components
- Faster installation with simple two-wire cabling

### High productivity and reliability

- Produces power even when the grid is down*
- More than one million cumulative hours of testing
- Class II double-insulated enclosure
- Optimized for the latest high-powered PV modules

### Microgrid-forming

- Complies with the latest advanced grid support
- Remote automatic updates for the latest grid requirements
- Configurable to support a wide range of grid profiles
- Meets CA Rule 21 (UL 1741-SA) and IEEE 1547:2018 (UL 1741-SB)

NOTE:

- IQ8 Microinverters cannot be mixed together with previous generations of Enphase microinverters (IQ7 Series, IQ6 Series, and so on) in the same system.
- IQ Microinverters ship with default settings that meet North America's IEEE 1547 interconnection standard requirements. Region-specific adjustments may be requested by an Authority Having Jurisdiction (AHJ) or utility representative. An IQ Gateway is required to make these changes during installation.



## IQ8MC Microinverter

| INPUT DATA (DC) | UNITS | IQ8MC-72-M-US |
|---|---|---|
| Commonly used module pairings [1] | W | 260–460 |
| Module compatibility | — | To meet compatibility, PV modules must be within the following max. input DC voltage and max. module $I_{sc}$. Module compatibility can be checked at https://enphase.com/installers/microinverters/calculator. |
| MPPT voltage range | V | 25–45 |
| Operating range | V | 18–58 |
| Min./Max. start voltage | V | 22/58 |
| Max. input DC voltage | V | 60 |
| Max. continuous operating DC current | A | 14 |
| Max. input DC short-circuit current | A | 25 |
| Max. module $I_{sc}$ | A | 20 |
| Overvoltage class DC port | — | II |
| DC port backfeed current | mA | 0 |
| PV array configuration | — | Ungrounded array; no additional DC side protection required; AC side protection requires max 20 A per branch circuit |

| OUTPUT DATA (AC) | UNITS | IQ8MC-72-M-US @240 VAC | IQ8MC-72-M-US @208 VAC |
|---|---|---|---|
| Peak output power | VA | 330 | 315 |
| Max. continuous output power | VA | 320 | 310 |
| Nominal grid voltage (L-L) | V | 240, split-phase (L-L), 180° | 208, single-phase (L-L), 120° |
| Min./Max. grid voltage [2] | V | 211–264 | 183–229 |
| Max. continuous output current | A | 1.33 | 1.49 |
| Nominal frequency | Hz | 60 | |
| Extended frequency range | Hz | 47–68 | |
| AC short circuit fault current over three cycles | Arms | 2.70 | |
| Max. units per 20 A (L-L) branch circuit [3] | — | 12 | 10 |
| Total harmonic distortion | % | <5 | |
| Overvoltage class AC port | — | III | |
| AC port backfeed current | mA | 18 | |
| Power factor setting | — | 1.0 | |
| Grid-tied power factor (adjustable) | — | 0.85 leading ... 0.85 lagging | |
| Peak efficiency | % | 97.4 | 97.2 |
| CEC weighted efficiency | % | 97.0 | 96.5 |
| Nighttime power consumption | mW | 33 | 25 |

| MECHANICAL DATA | UNITS |
|---|---|
| Ambient temperature range | -40°C to 65°C (-40°F to 149°F) |
| Relative humidity range | 4% to 100% (condensing) |
| DC connector type | Stäubli MC4 |
| Dimensions (H × W × D); Weight | 212 mm (8.3") × 175 mm (6.9") × 30.2 mm (1.2"); 1.1 kg (2.43 lbs) |
| Cooling | Natural convection – no fans |
| Approved for wet locations; Pollution degree | Yes; PD3 |
| Enclosure | Class II double-insulated, corrosion-resistant polymeric enclosure |
| Environ. category; UV exposure rating | NEMA Type 6; outdoor |

| COMPLIANCE | |
|---|---|
| Certifications | CA Rule 21 (UL 1741-SA), UL 62109-1, IEEE 1547:2018 (UL 1741-SB), FCC Part 15 Class B, ICES-0003 Class B, CAN/CSA-C22.2 NO. 107.1-01. This product is UL Listed as PV rapid shutdown equipment and conforms with NEC 2014, NEC 2017, NEC 2020, and NEC 2023 section 690.12 and C22.1-2018 Rule 64-218 rapid shutdown of PV systems for AC and DC conductors when installed according to the manufacturer's instructions. |

(1) No enforced DC/AC ratio.
(2) Nominal voltage range can be extended beyond nominal if required by the utility.
(3) Limits may vary. Refer to local requirements to define the number of microinverters per branch in your area.



momentum SOLAR

PRO CUSTOM SOLAR LLC D.B.A. MOMENTUM SOLAR
325 HIGH STREET, METUCHEN, NJ 08840
(732) 902-6224
MOMENTUMSOLAR.COM

**PROFESSIONAL ENGINEERING**

MINA A. MAKAR LICENSE No PE86753 STATE OF FLORIDA PROFESSIONAL ENGINEER

Digitally signed by
Reason: Digitally signed by Mina A Makar. Reason: This item has been electronically signed and sealed by [Mina A. Makar, PE 86753, COA # 33404] on the Date and Time Stamp shown using a digital signature. Printed copies of this document are not considered signed and sealed and the signature must be verified on any electronic copies
Date: 2024.08.02 09:08:33 -05:00

**SOLAR CONTRACTOR**

CAMERON CHRISTENSEN
CERTIFIED SOLAR CONTRACTOR LICENSE NUMBER: CVC57036
MOMENTUM SOLAR
5728 MAJOR BLVD. SUITE 307, ORLANDO FL. 32819

**CUSTOMER INFORMATION**

BARBARA JEFFERSON - MS155362
564 SE DEFENDER DR
LAKE CITY, FL 32025
(386) 292-2541

**PV SYSTEM INFORMATION**

SYSTEM SIZE (DC ): 11.48 KW
28 MODULES: HANWHA Q.PEAK DUO BLK ML-G10+ 410
28 INVERTERS: ENPHASE IQ8MC-72-M-US

**PROJECT INFORMATION**

| | | |
|---|---|---|
| INITIAL | DATE: 8/1/2024 | DESIGNER: AKL |
| REV: | DATE: | DESIGNER: |
| REV: | DATE: | DESIGNER: |

INVERTER DETAIL

**PV-1.2**

Data Sheet
**Enphase Networking**

# IQ Combiner 4/4C

The **IQ Combiner 4/4C** with IQ Gateway and integrated LTE-M1 cell modem (included only with IQ Combiner 4C) consolidates interconnection equipment into a single enclosure. It streamlines IQ Microinverters and storage installations by providing a consistent, pre-wired solution for residential applications. It offers up to four 2-pole input circuits and Eaton BR series busbar assembly.

X-IQ-AM1-240-4C
X2-IQ-AM1-240-4C (IEEE 1547:2018)

X-IQ-AM1-240-4
X2-IQ-AM1-240-4 (IEEE 1547:2018)

## Smart

- Includes IQ Gateway for communication and control
- Includes Mobile Connect cellular modem (CELLMODEM-M1-06-SP-05), included only with IQ Combiner 4C
- Includes solar shield to match Enphase IQ Battery aesthetics and deflect heat
- Supports Wi-Fi, Ethernet, or cellular connectivity
- Optional AC receptacle available for PLC bridge
- Provides production metering and consumption monitoring

## Simple

- Mounts on single stud with centered brackets
- Supports bottom, back and side conduit entry
- Allows up to four 2-pole branch circuits for 240VAC plug-in breakers (not included)
- 80A total PV or storage branch circuits

## Reliable

- Durable NRTL-certified NEMA type 3R enclosure
- Five-year limited warranty
- Two years labor reimbursement program coverage included for both the IQ Combiner SKU's
- UL listed
- X2-IQ-AM1-240-4 and X2-IQ-AM1-240-4C comply with IEEE 1547:2018 (UL 1741-SB, 3rd Ed.)

LISTED

To learn more about Enphase offerings, visit **enphase.com**
IQ-C-4-4C-DS-0103-EN-US-12-29-2022

ENPHASE.

## IQ Combiner 4/4C

| MODEL NUMBER | |
|---|---|
| IQ Combiner 4<br>X-IQ-AM1-240-4<br>X2-IQ-AM1-240-4 (IEEE 1547:2018) | IQ Combiner 4 with IQ Gateway printed circuit board for integrated revenue grade PV production metering (ANSI C12.20 ± 0.5%) and consumption monitoring (± 2.5%). Includes a silver solar shield to match the IQ Battery and IQ System Controller 2 and to deflect heat. |
| IQ Combiner 4C<br>X-IQ-AM1-240-4C<br>X2-IQ-AM1-240-4C (IEEE 1547:2018) | IQ Combiner 4C with IQ Gateway printed circuit board for integrated revenue grade PV production metering (ANSI C12.20 ± 0.5%) and consumption monitoring (± 2.5%). Includes Mobile Connect cellular modem (CELLMODEM-M1-06-SP-05), a plug-and-play industrial-grade cell modem for systems up to 60 microinverters. (Available in the US, Canada, Mexico, Puerto Rico, and the US Virgin Islands, where there is adequate cellular service in the installation area.) Includes a silver solar shield to match the IQ Battery and IQ System Controller and to deflect heat. |
| **ACCESSORIES AND REPLACEMENT PARTS** | (not included, order separately) |
| Supported microinverters | IQ6, IQ7, and IQ8. (Do not mix IQ6/7 Microinverters with IQ8) |
| Communications Kit<br>COMMS-CELLMODEM-M1-06<br>CELLMODEM-M1-36-SP-05<br>CELLMODEM-M1-36-AT-05 | <br>- Includes COMMS-KIT-01 and CELLMODEM-M1-06-SP-05 with 5-year Sprint data plan<br>- 4G based LTE-M1 cellular modem with 5-year Sprint data plan<br>- 4G based LTE-M1 cellular modem with 5-year AT&T data plan |
| Circuit Breakers<br>BRK-10A-2-240V<br>BRK-15A-2-240V<br>BRK-20A-2P-240V<br>BRK-15A-2P-240V-B<br>BRK-20A-2P-240V-B | Supports Eaton BR210, BR215, BR220, BR230, BR240, BR250, and BR260 circuit breakers.<br>Circuit breaker, 2 pole, 10A, Eaton BR210<br>Circuit breaker, 2 pole, 15A, Eaton BR215<br>Circuit breaker, 2 pole, 20A, Eaton BR220<br>Circuit breaker, 2 pole, 15A, Eaton BR215B with hold down kit support<br>Circuit breaker, 2 pole, 20A, Eaton BR220B with hold down kit support |
| XA-SOLARSHIELD-ES | Replacement solar shield for IQ Combiner 4/4C |
| XA-PLUG-120-3 | Accessory receptacle for Power Line Carrier in IQ Combiner 4/4C (required for EPLC-01) |
| X-IQ-NA-HD-125A | Hold-down kit for Eaton circuit breaker with screws |
| Consumption monitoring CT<br>(CT-200-SPLIT/CT-200-CLAMP) | A pair of 200A split core current transformers |
| **ELECTRICAL SPECIFICATIONS** | |
| Rating | Continuous duty |
| System voltage | 120/240VAC, 60Hz |
| Eaton BR series busbar rating | 125A |
| Max. continuous current rating | 65A |
| Max. continuous current rating (input from PV/storage) | 64A |
| Max. fuse/circuit rating (output) | 90A |
| Branch circuits (solar and/or storage) | Up to four 2-pole Eaton BR series Distributed Generation (DG) breakers only (not included) |
| Max. total branch circuit breaker rating (input) | 80A of distributed generation/95A with IQ Gateway breaker included |
| IQ Gateway breaker | 10A or 15A rating GE/Siemens/Eaton included |
| Production metering CT | 200A solid core pre-installed and wired to IQ Gateway |
| **MECHANICAL DATA** | |
| Dimensions (WxHxD) | 37.5 cm x 49.5 cm x 16.8 cm (14.75 in x 19.5 in x 6.63 in). Height is 53.5 cm (21.06 in) with mounting brackets. |
| Weight | 7.5 kg (16.5 lbs) |
| Ambient temperature range | -40°C to +46°C (-40°F to 115°F) |
| Cooling | Natural convection, plus heat shield |
| Enclosure environmental rating | Outdoor, NRTL-certified, NEMA type 3R, polycarbonate construction |
| Wire sizes | • 20A to 50A breaker inputs: 14 to 4 AWG copper conductors<br>• 60A breaker branch input: 4 to 1/0 AWG copper conductors<br>• Main lug combined output: 10 to 2/0 AWG copper conductors<br>• Neutral and ground: 14 to 1/0 copper conductors<br>• Always follow local code requirements for conductor sizing. |
| Altitude | Up to 3,000 meters (9,842 feet) |
| **INTERNET CONNECTION OPTIONS** | |
| Integrated Wi-Fi | IEEE 802.11b/g/n |
| Cellular | CELLMODEM-M1-06-SP-05, CELLMODEM-M1-06-AT-05 (4G based LTE-M1 cellular modem). Note that an Mobile Connect cellular modem is required for all Enphase Energy System installations. |
| Ethernet | Optional, IEEE 802.3, Cat5E (or Cat6) UTP Ethernet cable (not included) |
| **COMPLIANCE** | |
| Compliance, IQ Combiner | CA Rule 21 (UL 1741-SA)<br>IEEE 1547:2018 -UL 1741-SB, 3rd Ed. (X2-IQ-AM1-240-4 and X2-IQ-AM1-240-4C)<br>CAN/CSA C22.2 No. 107.1, Title 47 CFR, Part 15, Class B, ICES 003<br>Production metering: ANSI C12.20 accuracy class 0.5 (PV production)<br>Consumption metering: accuracy class 2.5 |
| Compliance, IQ Gateway | UL 60601-1/CAN/CSA 22.2 No. 61010-1 |

© 2022 Enphase Energy. All rights reserved. Enphase, the Enphase logo, IQ Combiner 4/4C, and other names are trademarks of Enphase Energy, Inc. Data subject to change.

IQ-C-4-4C-DS-0103-EN-US-12-29-2022

momentum SOLAR

PRO CUSTOM SOLAR LLC D.B.A. MOMENTUM SOLAR
325 HIGH STREET, METUCHEN, NJ 08840
(732) 902-6224
MOMENTUMSOLAR.COM

**PROFESSIONAL ENGINEERING**

MINA A. MAKAR
LICENSE
No PE86753
STATE OF FLORIDA
PROFESSIONAL ENGINEER

Digitally signed by
Reason: Digitally signed by Mina A Makar. Reason: This item has been electronically signed and sealed by [Mina A. Makar, PE 86753, COA # 33404] on the Date and Time Stamp shown using a digital signature. Printed copies of this document are not considered signed and sealed and the signature must be verified on any electronic copies
Date: 2024.08.02 09:08:33 -05:00

**SOLAR CONTRACTOR**

CAMERON CHRISTENSEN
CERTIFIED SOLAR CONTRACTOR LICENSE NUMBER: CVC57036
MOMENTUM SOLAR
5728 MAJOR BLVD. SUITE 307, ORLANDO FL. 32819

**CUSTOMER INFORMATION**

BARBARA JEFFERSON - MS155362
564 SE DEFENDER DR
LAKE CITY, FL 32025
(386) 292-2541

**PV SYSTEM INFORMATION**

SYSTEM SIZE (DC ): 11.48 KW
28 MODULES: HANWHA Q.PEAK DUO BLK ML-G10+ 410
28 INVERTERS: ENPHASE IQ8MC-72-M-US

**PROJECT INFORMATION**

| | | |
|---|---|---|
| INITIAL | DATE: 8/1/2024 | DESIGNER: AKL |
| REV: | DATE: | DESIGNER: |
| REV: | DATE: | DESIGNER: |

COMBINER DETAIL

**PV-1.3**

# Q.PEAK DUO BLK ML-G10+ SERIES

qcells

**385 - 410 Wp | 132 Cells**
**20.9 % Maximum Module Efficiency**

MODEL Q.PEAK DUO BLK ML-G10+

### Breaking the 20% efficiency barrier

Q.ANTUM DUO Z Technology with zero gap cell layout boosts module efficiency up to 20.9%.

### A reliable investment

Inclusive 25-year product warranty and 25-year linear performance warranty[1].

### Enduring high performance

Long-term yield security with Anti LeTID Technology, Anti PID Technology[2] and Hot-Spot Protect.

### Extreme weather rating

High-tech aluminium alloy frame, certified for high snow (5400 Pa) and wind loads (4000 Pa).

### Innovative all-weather technology

Optimal yields, whatever the weather with excellent low-light and temperature behaviour.

### The most thorough testing programme in the industry

Qcells is the first solar module manufacturer to pass the most comprehensive quality programme in the industry: The new "Quality Controlled PV" of the independent certification institute TÜV Rheinland.

[1] See data sheet on rear for further information.
[2] APT test conditions according to IEC/TS 62804-1:2015, method A (−1500 V, 96 h)

**The ideal solution for:**

Rooftop arrays on residential buildings

## Q.PEAK DUO BLK ML-G10+ SERIES

### Mechanical Specification

| | |
|---|---|
| Format | 74.0 in × 41.1 in × 1.26 in (including frame) (1879 mm × 1045 mm × 32 mm) |
| Weight | 48.5 lbs (22.0 kg) |
| Front Cover | 0.13 in (3.2 mm) thermally pre-stressed glass with anti-reflection technology |
| Back Cover | Composite film |
| Frame | Black anodised aluminium |
| Cell | 6 × 22 monocrystalline Q.ANTUM solar half cells |
| Junction box | 2.09-3.98 in × 1.26-2.36 in × 0.59-0.71 in (53-101 mm × 32-60 mm × 15-18 mm), IP67, with bypass diodes |
| Cable | 4 mm² Solar cable; (+) ≥ 49.2 in (1250 mm), (−) ≥ 49.2 in (1250 mm) |
| Connector | Stäubli MC4; IP68 |

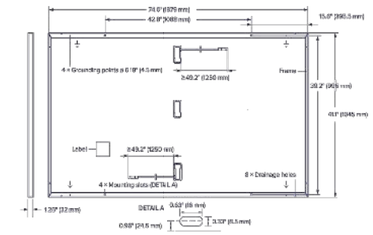

### Electrical Characteristics

| POWER CLASS | | | 385 | 390 | 395 | 400 | 405 | 410 |
|---|---|---|---|---|---|---|---|---|
| MINIMUM PERFORMANCE AT STANDARD TEST CONDITIONS, STC[1] (POWER TOLERANCE +5 W/−0 W) | | | | | | | | |
| Minimum | Power at MPP[1] | $P_{MPP}$ [W] | 385 | 390 | 395 | 400 | 405 | 410 |
| | Short Circuit Current[1] | $I_{SC}$ [A] | 11.04 | 11.07 | 11.10 | 11.14 | 11.17 | 11.20 |
| | Open Circuit Voltage[1] | $V_{OC}$ [V] | 45.19 | 45.23 | 45.27 | 45.30 | 45.34 | 45.37 |
| | Current at MPP | $I_{MPP}$ [A] | 10.59 | 10.65 | 10.71 | 10.77 | 10.83 | 10.89 |
| | Voltage at MPP | $V_{MPP}$ [V] | 36.36 | 36.62 | 36.88 | 37.13 | 37.39 | 37.64 |
| | Efficiency[1] | η [%] | ≥19.6 | ≥19.9 | ≥20.1 | ≥20.4 | ≥20.6 | ≥20.9 |
| MINIMUM PERFORMANCE AT NORMAL OPERATING CONDITIONS, NMOT[2] | | | | | | | | |
| Minimum | Power at MPP | $P_{MPP}$ [W] | 288.8 | 292.6 | 296.3 | 300.1 | 303.8 | 307.6 |
| | Short Circuit Current | $I_{SC}$ [A] | 8.90 | 8.92 | 8.95 | 8.97 | 9.00 | 9.03 |
| | Open Circuit Voltage | $V_{OC}$ [V] | 42.62 | 42.65 | 42.69 | 42.72 | 42.76 | 42.79 |
| | Current at MPP | $I_{MPP}$ [A] | 8.35 | 8.41 | 8.46 | 8.51 | 8.57 | 8.62 |
| | Voltage at MPP | $V_{MPP}$ [V] | 34.59 | 34.81 | 35.03 | 35.25 | 35.46 | 35.68 |

[1] Measurement tolerances $P_{MPP}$ ±3%; $I_{SC}$; $V_{OC}$ ±5% at STC: 1000 W/m², 25±2 °C, AM 1.5 according to IEC 60904-3 • [2] 800 W/m², NMOT, spectrum AM 1.5

### Qcells PERFORMANCE WARRANTY

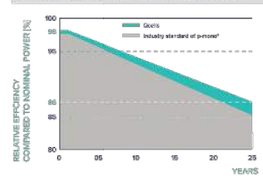


At least 98% of nominal power during first year. Thereafter max. 0.5% degradation per year. At least 93.5% of nominal power up to 10 years. At least 86% of nominal power up to 25 years.

All data within measurement tolerances. Full warranties in accordance with the warranty terms of the Qcells sales organisation of your respective country.

*Standard terms of guarantee for the 5 PV companies with the highest production capacity in 2021 (February 2021)

### PERFORMANCE AT LOW IRRADIANCE

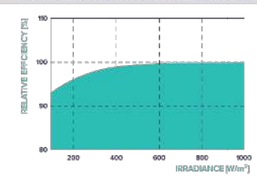


Typical module performance under low irradiance conditions in comparison to STC conditions (25 °C, 1000 W/m²).

### TEMPERATURE COEFFICIENTS

| | | | | | | | |
|---|---|---|---|---|---|---|---|
| Temperature Coefficient of $I_{SC}$ | α | [%/K] | +0.04 | Temperature Coefficient of $V_{OC}$ | β | [%/K] | −0.27 |
| Temperature Coefficient of $P_{MPP}$ | γ | [%/K] | −0.34 | Nominal Module Operating Temperature | NMOT | [°F] | 109±5.4 (43±3 °C) |

### Properties for System Design

| | | | | | |
|---|---|---|---|---|---|
| Maximum System Voltage | $V_{SYS}$ | [V] | 1000 (IEC)/1000 (UL) | PV module classification | Class II |
| Maximum Series Fuse Rating | | [A DC] | 20 | Fire Rating based on ANSI/UL 61730 | TYPE 2 |
| Max. Design Load, Push/Pull[3] | | [lbs/ft²] | 75 (3600 Pa)/55 (2660 Pa) | Permitted Module Temperature on Continuous Duty | −40 °F up to +185 °F (−40 °C up to +85 °C) |
| Max. Test Load, Push/Pull[3] | | [lbs/ft²] | 113 (5400 Pa)/84 (4000 Pa) | | |

[3] See Installation Manual

### Qualifications and Certificates

UL 61730, CE-compliant,
Quality Controlled PV - TÜV Rheinland,
IEC 61215:2016, IEC 61730:2016,
U.S. Patent No. 9,893,215 (solar cells).

Specifications subject to technical changes © Qcells Q.PEAK_DUO_BLK_ML-G10+_series_385-410_2023-01_Rev04_NA

**Qcells pursues minimizing paper output in consideration of the global environment.**

Note: Installation instructions must be followed. Contact our technical service for further information on approved installation of this product.
Hanwha Q CELLS America Inc. 400 Spectrum Center Drive, Suite 1400, Irvine, CA 92618, USA | TEL. +1 949 748 59 96 | EMAIL inquiry@qcells.com | WEB www.qcells.com

qcells

momentum SOLAR


PRO CUSTOM SOLAR LLC D.B.A. MOMENTUM SOLAR
325 HIGH STREET, METUCHEN, NJ 08840
(732) 902-6224
MOMENTUMSOLAR.COM


**PROFESSIONAL ENGINEERING**

MINA A. MAKAR
LICENSE
No PE86753
STATE OF FLORIDA
PROFESSIONAL ENGINEER

Digitally signed by
Reason: Digitally signed by Mina A Makar. Reason: This item has been electronically signed and sealed by [Mina A. Makar, PE 86753, COA # 33404] on the Date and Time Stamp shown using a digital signature. Printed copies of this document are not considered signed and sealed and the signature must be verified on any electronic copies
Date: 2024.08.02 09:08:33 -05:00

**SOLAR CONTRACTOR**

CAMERON CHRISTENSEN
CERTIFIED SOLAR CONTRACTOR LICENSE NUMBER: CVC57036
MOMENTUM SOLAR
5728 MAJOR BLVD. SUITE 307, ORLANDO FL. 32819

**CUSTOMER INFORMATION**

BARBARA JEFFERSON - MS155362
564 SE DEFENDER DR
LAKE CITY, FL 32025
(386) 292-2541

**PV SYSTEM INFORMATION**

SYSTEM SIZE (DC ): 11.48 KW
28 MODULES: HANWHA Q.PEAK DUO BLK ML-G10+ 410
28 INVERTERS: ENPHASE IQ8MC-72-M-US

**PROJECT INFORMATION**

| | | |
|---|---|---|
| INITIAL | DATE: 8/1/2024 | DESIGNER: AKL |
| REV: | DATE: | DESIGNER: |
| REV: | DATE: | DESIGNER: |

PANEL DETAIL

**PV-1.4**

SCALE: 3/32" = 1'-0"

| ROOF | PANEL COUNT | TILT | AZIMUTH | SHADING | LANDSCAPE MAX SPAN (ROOF AREA 1/2/3) | PORTRAIT MAX SPAN (ROOF AREA 1/2/3) | LANDSCAPE MAX CANTILEVER | PORTRAIT MAX CANTILEVER |
|---|---|---|---|---|---|---|---|---|
| R1 | 28 | 15° | 234° | 98% | 48 /48 /48 | 48 /48 /48 | 16 /10 /10 | 16 /10 /10 |
| | | | | | | | | |
| | | | | | | | | |
| | | | | | | | | |

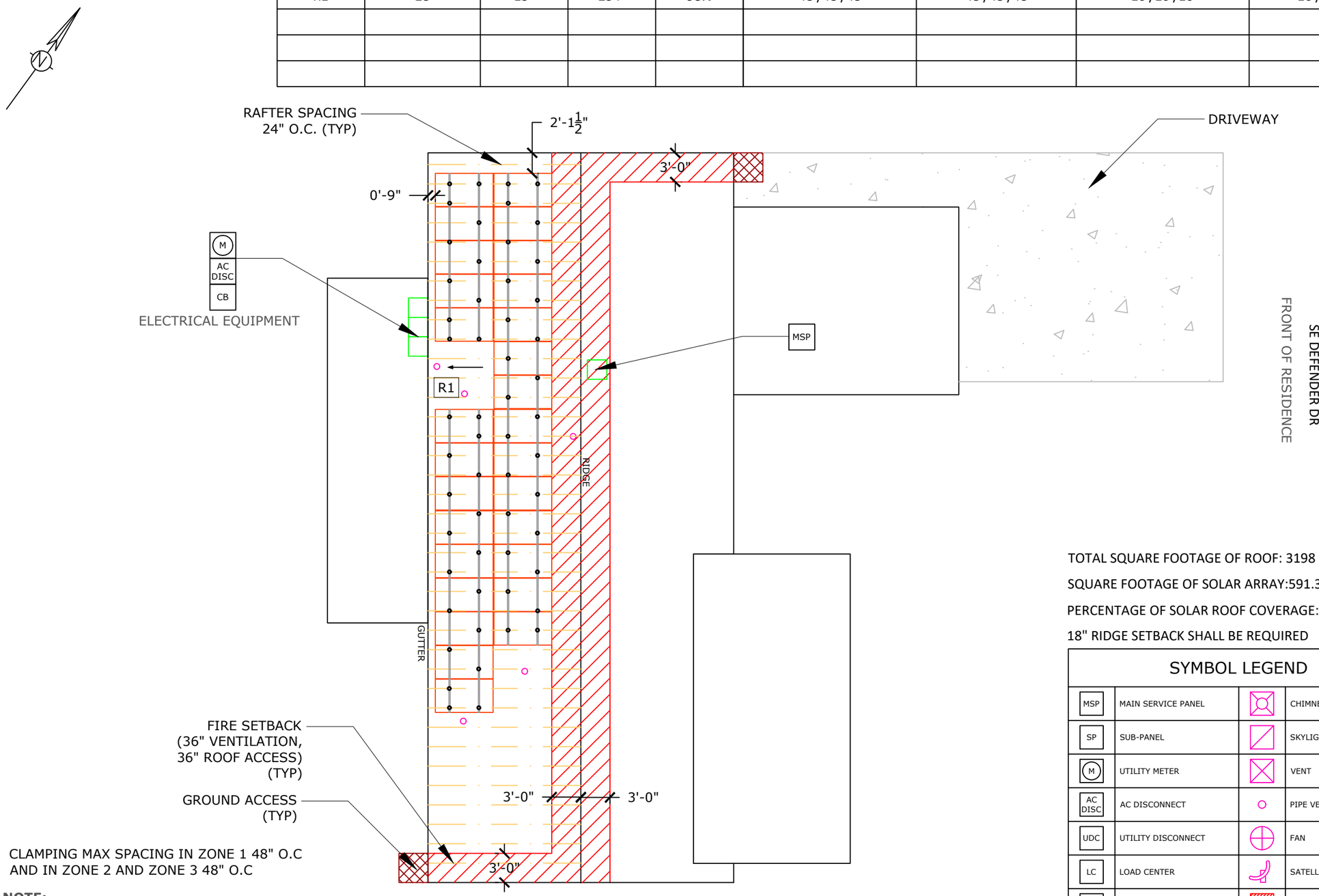


TOTAL SQUARE FOOTAGE OF ROOF: 3198 SQFT

SQUARE FOOTAGE OF SOLAR ARRAY:591.39 SQFT

PERCENTAGE OF SOLAR ROOF COVERAGE: 18.5%

18" RIDGE SETBACK SHALL BE REQUIRED

## SYMBOL LEGEND

| | | | |
|---|---|---|---|
| MSP | MAIN SERVICE PANEL | | CHIMNEY |
| SP | SUB-PANEL | | SKYLIGHT |
| M | UTILITY METER | | VENT |
| AC DISC | AC DISCONNECT | | PIPE VENT |
| UDC | UTILITY DISCONNECT | | FAN |
| LC | LOAD CENTER | | SATELLITE DISH |
| N3R | NEMA 3R BOX W/ ENVOY-S | | FIRE SETBACKS |
| CB | COMBINER BOX | | MIN 3'x3' GROUND ACCESS POINT |
| | MODULE | | PITCH DIRECTION |
| | | WIND PRESSURE ZONE LINES. REFER TO PV-2.2 FOR ADDITIONAL INFO | |

**NOTE:**

1. ROOF COVERING MATERIAL IS COMPOSED OF CORRUGATED METAL.
2. EXACT ATTACHMENT LOCATION AND QUANTITY OF ATTACHMENTS ARE BASED ON EXISTING RAFTER LOCATIONS OBTAINED FROM FIELD MEASUREMENTS. THE LOCATION AND QUANTITY OF ATTACHMENTS MAY VARY BASED ON RAFTER LAYOUT START POINT, SPACING VARIATIONS AND ROOFING TYPE. VERIFY IN THE FIELD ALL RAFTER LOCATIONS AND ADJUST LAYOUT AS REQUIRED. A TILE ROOF WILL PRODUCE A STAGGERED ATTACHMENT LAYOUT BECAUSE OF EXISTING STAGGERED TILE JOINT LOCATIONS.

momentum SOLAR


PRO CUSTOM SOLAR LLC D.B.A. MOMENTUM SOLAR
325 HIGH STREET, METUCHEN, NJ 08840
(732) 902-6224
MOMENTUMSOLAR.COM


**PROFESSIONAL ENGINEERING**

MINA A. MAKAR
LICENSE
No PE86753
STATE OF FLORIDA
PROFESSIONAL ENGINEER

Digitally signed by
Reason: Digitally signed by Mina A Makar. Reason: This item has been electronically signed and sealed by [Mina A. Makar, PE 86753, COA # 33404] on the Date and Time Stamp shown using a digital signature. Printed copies of this document are not considered signed and sealed and the signature must be verified on any electronic copies


Digitally signed by Mina A Makar.
Reason: This item has been electronically signed and sealed by [Mina A. Makar, PE 86753, COA # 33404] on the Date and Time Stamp shown using a digital signature. Printed copies of this document are not considered signed and sealed and the signature must be verified on any electronic copies


Date: 2024.08.02 09:08:33 -05:00

**SOLAR CONTRACTOR**

CAMERON CHRISTENSEN
CERTIFIED SOLAR CONTRACTOR LICENSE NUMBER: CVC57036
MOMENTUM SOLAR
5728 MAJOR BLVD. SUITE 307, ORLANDO FL. 32819

**CUSTOMER INFORMATION**

BARBARA JEFFERSON - MS155362
564 SE DEFENDER DR
LAKE CITY, FL 32025
(386) 292-2541

**PV SYSTEM INFORMATION**

SYSTEM SIZE (DC ): 11.48 KW
28 MODULES: HANWHA Q.PEAK DUO BLK ML-G10+ 410
28 INVERTERS: ENPHASE IQ8MC-72-M-US

**PROJECT INFORMATION**

| | | |
|---|---|---|
| INITIAL | DATE: 8/1/2024 | DESIGNER: AKL |
| REV: | DATE: | DESIGNER: |
| REV: | DATE: | DESIGNER: |

ROOF LAYOUT

**PV-2**

| PV MODULE RATINGS | |
|---|---|
| MODULE MAKE | HANWHA |
| MODEL | HANWHA Q.PEAK DUO BLK ML-G10+ 410 |
| MAX POWER | 410W |
| OPEN CIRCUIT VOLTAGE | 45.37V |
| MPP VOLTAGE | 37.64V |
| SHORT CIRCUIT CURRENT | 11.2A |
| MPP CURRENT | 10.89A |
| NUMBER OF MODULES | 28 |
| UL1703 COMPLIANT | YES |

| INVERTER RATINGS | |
|---|---|
| INVERTER MAKE | ENPHASE |
| MODEL | Enphase IQ8MC-72-M-US |
| MAX OUTPUT POWER | 320W |
| OPEN DC VOLTAGE | 60V |
| NOMINAL AC VOLTAGE | 240V |
| MAX AC CURRENT | 1.33A |
| CEC INVERTER EFFICIENCY | 97% |
| NUMBER OF INVERTERS | 28 |
| UL1703 COMPLIANT | YES |

VOLTAGE DROP CALCULATIONS

FORMULA USED PER NEC HANDBOOK 215.2(A)(4) WHERE APPLICABLE

| WIRE RUN | $V_{mp}$ | $I_{mp}$ | R | L (FT) | $V_o$ | % $V_o$ | WIRE SIZE |
|---|---|---|---|---|---|---|---|
| BRANCH TO J-BOX | 240.00 | 13.3 | 1.98 | 65.83 | 3.467 | 1.44% | 12 AWG |
| J-BOX TO LOAD CENTER | 240.00 | 37.24 | 1.24 | 50.00 | 4.618 | 1.92% | 10 AWG |
| LOAD CENTER TO AC DISCONNECT | 240.00 | 46.55 | 0.491 | 3.00 | 0.137 | 0.06% | 06 AWG |
| AC DISCONNECT TO INTERCONNECTION | 240.00 | 46.55 | 0.491 | 10.00 | 0.457 | 0.19% | 06 AWG |

| SUB PANEL BREAKER SIZE | # OF MODULES | PV BREAKER PER BRANCH |
|---|---|---|
| | UP TO 16 | 20A |

THIS SOLAR PHOTOVOLTAIC SYSTEM COMPLIES WITH THE 2023 FLORIDA BUILDING CODE AND THE 2020 NATIONAL ELECTRICAL CODE

28 HANWHA Q.PEAK DUO BLK ML-G10+ 410 410W MODULES PAIRED WITH

28 ENPHASE IQ8MC-72-M-US MICRO-INVERTERS

**SOLAR INSTALLER NOTES:**
**REPLACE EXISTING INTERIOR 100A BUS RATED MAIN SERVICE PANEL WITH NEW INTERIOR 100A BUS RATED MAIN SERVICE PANEL WITH 100A MAIN BREAKER.**

## FSEC CERTIFICATION STATEMENT:

PER FL. STATUE 377.705 , I, MINA A. MAKAR PE# 86753, CERTIFICATE OF AUTHORIZATION #33404, AN ENGINEER LICENSED PURSUANT TO CHAPTER 471,CERTIFY THAT THE PV ELECTRICAL SYSTEM AND ELECTRICAL COMPONENTS ARE DESIGNED AND APPROVED USING THE STANDARDS CONTAINED IN THE MOST RECENT VERSION OF THE FLORIDA BUILDING CODE. FBC 2023

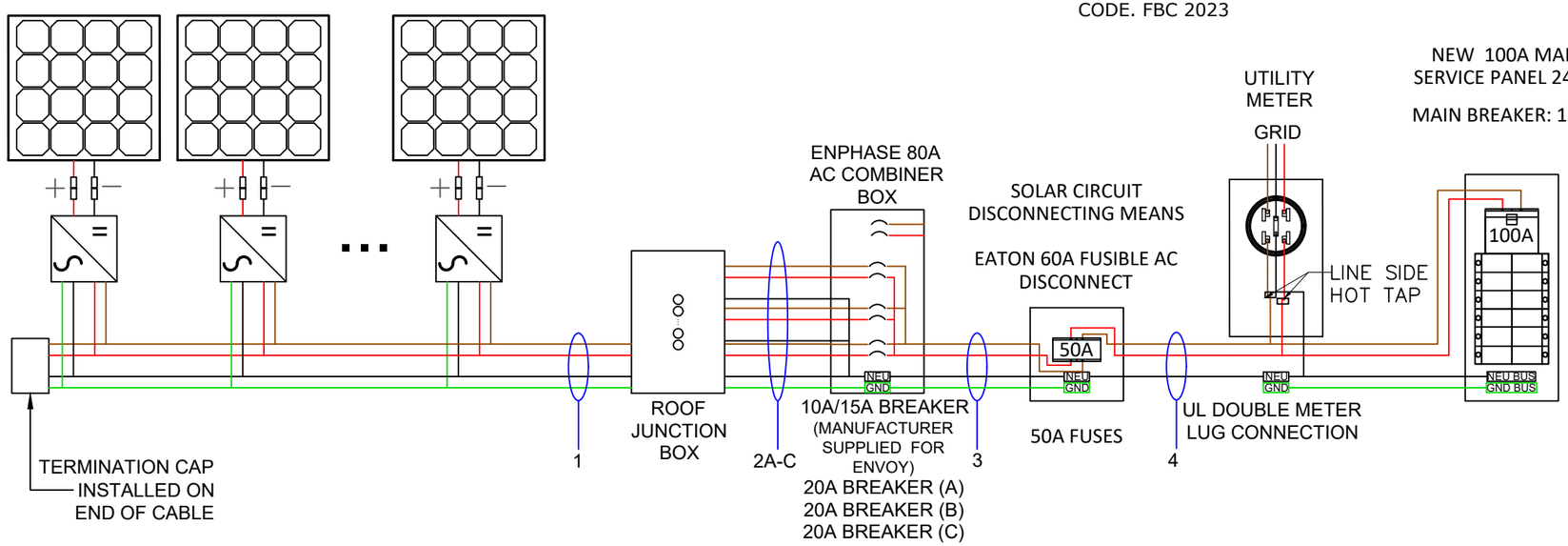


| Wire Tag | Conduit | Wire Qty | Wire Gauge | Wire Type | Temp. Rating | Wire Ampacity (A) | Temp. Derate | Conduit Fill Derate | Derated Ampacity (A) | Inverter Qty | NOC (A) | NEC Correction | Design Current (A) | Ground Size | Ground Wire Type |
|---|---|---|---|---|---|---|---|---|---|---|---|---|---|---|---|
| 1 | OPEN AIR | 3 | 12 AWG | Trunk Cable | 90°C | 30 | 0.96 | 1 | 28.80 | 10 | 1.33 | 1.25 | 16.63 | 12 AWG | Trunk Cable |
| 2A | 3/4" PVC | 6 | 10 AWG | THWN-2 | 75°C | 35 | 0.96 | 0.8 | 26.88 | 10 | 1.33 | 1.25 | 16.63 | 08 AWG | THWN-2 |
| 2B | | | 10 AWG | THWN-2 | 75°C | 35 | 0.96 | | 26.88 | 9 | 1.33 | 1.25 | 14.96 | | |
| 2C | | | 10 AWG | THWN-2 | 75°C | 35 | 0.96 | | 26.88 | 9 | 1.33 | 1.25 | 14.96 | | |
| 3 | 3/4" PVC | 3 + G | 06 AWG | THWN-2 | 75°C | 65 | 0.96 | 1 | 62.40 | 28 | 1.33 | 1.25 | 46.55 | 08 AWG | THWN-2 |
| 4 | 3/4" PVC | 3 | 06 AWG | THWN-2 | 75°C | 65 | 0.96 | 1 | 62.40 | 28 | 1.33 | 1.25 | 46.55 | | THWN-2 |

NOTE: LETTER "G" IN WIRE QTY TAB STANDS FOR GROUNDING CONDUCTOR.


momentum SOLAR

PRO CUSTOM SOLAR LLC D.B.A. MOMENTUM SOLAR
325 HIGH STREET, METUCHEN, NJ 08840
(732) 902-6224
MOMENTUMSOLAR.COM


**PROFESSIONAL ENGINEERING**

MINA A. MAKAR LICENSE No PE86753 STATE OF FLORIDA PROFESSIONAL ENGINEER

Digitally signed by Reason: Digitally signed by Mina A Makar Reason: This item has been electronically signed and sealed by [Mina A. Makar, PE 86753, COA # 33404] on the Date and Time Stamp shown using a digital signature. Printed copies of this document are not considered signed and sealed and the signature must be verified on any electronic copies
Date: 2024.08.02 09:08:33 -05:00

**SOLAR CONTRACTOR**

CAMERON CHRISTENSEN
CERTIFIED SOLAR CONTRACTOR LICENSE NUMBER: CVC57036
MOMENTUM SOLAR
5728 MAJOR BLVD. SUITE 307, ORLANDO FL. 32819

**CUSTOMER INFORMATION**

BARBARA JEFFERSON - MS155362
564 SE DEFENDER DR
LAKE CITY, FL 32025
(386) 292-2541

**PV SYSTEM INFORMATION**

SYSTEM SIZE (DC ): 11.48 KW
28 MODULES: HANWHA Q.PEAK DUO BLK ML-G10+ 410
28 INVERTERS: ENPHASE IQ8MC-72-M-US

**PROJECT INFORMATION**

| | | |
|---|---|---|
| INITIAL | DATE: 8/1/2024 | DESIGNER: AKL |
| REV: | DATE: | DESIGNER: |
| REV: | DATE: | DESIGNER: |

THREE LINE DIAGRAM

# PV-3

**ELECTRICAL NOTES:**

1. ALL CALCULATIONS FOR VOC, VMAX, IMP AND ISC HAVE BEEN CALCULATED USING THE MANUFACTURED STRING CALCULATOR BASED ON ASHRAE 2% HIGH AND EXTREME MINIMUM TEMPERATURE COEFFICIENTS.
2. THE ENTIRE ARRAY IS BONDED ACCORDING TO (NEC 690.43(A) THROUGH (D) WITH 250.134 OR 250.136.
3. THIS SYSTEM COMPLIES WITH NEC 2020
4. BRANCH CIRCUIT CALCULATION FOR WIRE TAG 1 DISPLAYS THE LARGEST BRANCH CIRCUIT IN SYSTEM. OTHER BRANCH CIRCUITS SHALL HAVE LOWER DESIGN CURRENT THAN THE ONE SHOWN. IN ADDITION, VOLTAGE DROP CALCULATIONS FROM PANELS TO THE COMBINER BOX SHALL BE SHOWN IN A SIMILAR FASHION
5. ALL CONDUCTORS ARE SIZED BASED ON NEC 2020 ARTICLE 310
6. ALL EQUIPMENT INSTALLED IS RATED AT 75°C
7. INVERTER NOC (NOMINAL OPEN CURRENT) OBTAINED FROM EQUIPMENT DATASHEET
8. CONTRACTOR SHALL BE RESPONSIBLE FOR COMPLYING WITH ALL LOCAL AND NATIONAL CODE REQUIREMENTS.
9. EACH MODULE MUST BE GROUNDED ACCORDING TO USER INSTRUCTIONS
10. ALL EQUIPMENT SHALL BE LISTED PER NEC 690.4(B)
11. PER NEC 690.13, 690.15, PROVIDE A WARNING SIGN AT ALL LOCATIONS WHERE TERMINALS OF THE DISCONNECTING MEANS MAY BE ENERGIZED IN THE OPEN POSITION> SIGN SHALL READ *WARNING - ELECTRIC SHOCK HAZARD - DO NOT TOUCH TERMINALS - OR EQUIVALENT.
12. PER NEC 705.10, PROVIDE A PERMANENT PLAQUE OR DIRECTORY SHOWING ALL ELECTRIC POWER SOURCES ON THE PREMISES AT SERVICE ENTRANCE.
13. INTERCONNECTION METHOD SHALL COMPLY WITH NEC 705.12
14. AND OPTION FOR A SINGLE CIRCUIT BRANCH TO BE SPLIT INTO TWO SUB-CIRCUIT BRANCHES IS ACCEPTABLE.
15. ALL CONDUCTORS MUST BE COPPER.
16. NEUTRAL AND EQUIPMENT GROUNDING CONDUCTOR BONDED AS PER NEC 250.24(C).
17. EQUIPMENT GROUNDING CONDUCTOR IS CONNECTED TO A GROUNDING ELECTRODE SYSTEM PER 250.54(D).
18. FUSES FOR PV DISCONNECT HAVE AIC RATINGS OF 200KA AC AND 20KA DC.
19. SUPPLY SIDE CONNECTION SHALL BE MADE USING ILSCO INSULATION PIERCING CONNECTORS (IPC). MAKE, MODEL, AND RATING OF INTERCONNECTION CAN BE SEEN ON TABLE 1 BELOW.
20. METHOD OF INTERCONNECTION CAN BE SEEN IN FIGURE 1.
21. UTILITY HAS 24-HR UNRESTRICTED ACCESS TO ALL PHOTOVOLTAIC SYSTEM COMPONENTS LOCATED AT THE SERVICE ENTRANCE.
22. WORKING CLEARANCES AROUND THE EXISTING AND NEW ELECTRICAL EQUIPMENT WILL BE MAINTAINED IN ACCORDANCE WITH NEC ARTICLE 110.26.
23. CONDUCTORS EXPOSED TO SUNLIGHT SHALL BE LISTED AS SUNLIGHT RESISTANT PER NEC ARTICLE 300.6 (C)(1) AND ARTICLE 310.8 (D).
24. CONDUCTORS EXPOSED TO WET LOCATIONS SHALL BE SUITABLE FOR USE IN WET LOCATIONS PER NEC ARTICLE 310.10 (C).
25. TOTAL AREA OF ALL CONDUCTORS, SPLICES, AND TAPS INSTALLED AT ANY CROSS SECTION OF THE WIRING DOES NOT EXCEED 75% OF THE CROSS SECTIONAL AREA OF THE SPACE. NEC 312.8(A)(2).
26. SYSTEM IS CONSIDERED AN AC MODULE SYSTEM. NO DC CONDUCTORS ARE PRESENT IN CONDUIT, COMBINER, JUNCTION BOX, DISCONNECT. AND COMPLIES WITH 690.6 - NO DC DISCONNECT AND ASSOCIATED DC LABELING ARE REQUIRED.
27. SYSTEM COMPLIES WITH 690.12 RAPID SHUTDOWN AND ASSOCIATED LABELING AS PER 690.56(C). AC VOLTAGE AND SYSTEM OPERATING CURRENT SHALL BE PROVIDED 690.51.
28. CONDUCTORS IN CONDUIT ARE AC CONDUCTORS BRANCH CIRCUITS AND NOT PV SOURCE CIRCUITS. 690.6.
29. ALL GROUNDING SHALL COMPLY WITH 690.47(A) IN THAT THE AC MODULES WILL COMPLY WITH 250.64.
30. NO TERMINALS SHALL BE ENERGIZED IN THE OPEN POSITION IN THIS AC MODULE SYSTEM 690.13(B), 690.6.
31. WHERE APPLICABLE: INTERCONNECTION SHALL COMPLY WITH 705.11(A) THROUGH (E) OR 705.12(B) THROUGH (E)
32. ALL WARNING SIGN(S) OR LABEL(S) SHALL COMPLY WITH 2020 NEC ARTICLE 110.21(B). LABEL WARNINGS SHALL ADEQUATELY WARN OF THE HAZARD. LABELS SHALL BE PERMANENTLY AFFIXED TO THE EQUIPMENT, AND LABELS REQUIRED SHALL BE SUITABLE FOR THE ENVIRONMENT.
33. PV POWER CIRCUIT LABELS SHALL APPEAR ON EVERY SECTION OF THE WIRING SYSTEM THAT IS SEPARATED BY ENCLOSURES, WALLS, PARTITIONS, CEILINGS, OR FLOORS.

**TABLE 1:**

| MAKE | MODEL | VOLTAGE RATING | CONDUCTOR RANGE MAIN | CONDUCTOR RANGE TAP |
|---|---|---|---|---|
| ILSCO | IPC 4006 | 600 V | 4/0-4 AWG | 6-14 AWG |
| ILSCO | IPC 4020 | 600 V | 4/0-2 AWG | 2/0-6 AWG |

INSTRUCTIONS FOR LINE TAPS

FIGURE 1:

1. ADJUST THE CONNECTOR NUT TO SUITABLE LOCATION
2. PUT THE BRANCH WIRE INTO THE CAP SHEATH FULLY
3. INSERT THE MAIN WIRE, IF THERE ARE TWO LAYS OF INSULATED LAY IN THE MAIN CABLE, SHOULD STRIP A CERTAIN LENGTH OF THE FIRST INSULATED LAY FROM INSERTED END
4. TURN THE NUT BY HAND, AND FIX THE CONNECTOR IN SUITABLE LOCATION.
5. SCREW THE NUT WITH THE SLEEVE SPANNER.
6. SCREW THE NUT CONTINUALLY UNTIL THE TOP PART IS CRACKED AND DROPPED DOWN

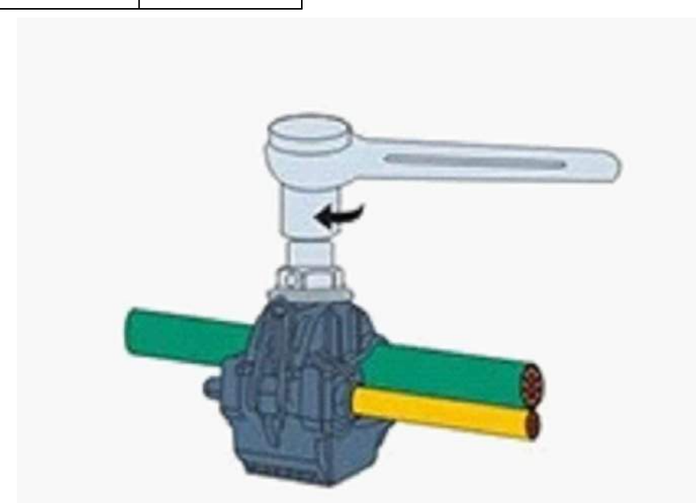

momentum SOLAR

PRO CUSTOM SOLAR LLC D.B.A. MOMENTUM SOLAR
325 HIGH STREET, METUCHEN, NJ 08840
(732) 902-6224
MOMENTUMSOLAR.COM

**PROFESSIONAL ENGINEERING**

MINA A. MAKAR
LICENSE
No PE86753
STATE OF FLORIDA
PROFESSIONAL ENGINEER

Digitally signed by
Reason: Digitally signed by Mina A Makar. Reason : This item has been electronically signed and sealed by [Mina A. Makar, PE 86753, COA # 33404] on the Date and Time Stamp shown using a digital signature. Printed copies of this document are not considered signed and sealed and the signature must be verified on any electronic copies
Date: 2024.08.02 09:08:33 -05:00

**SOLAR CONTRACTOR**

CAMERON CHRISTENSEN
CERTIFIED SOLAR CONTRACTOR LICENSE NUMBER: CVC57036
MOMENTUM SOLAR
5728 MAJOR BLVD. SUITE 307, ORLANDO FL. 32819

**CUSTOMER INFORMATION**

BARBARA JEFFERSON - MS155362
564 SE DEFENDER DR
LAKE CITY, FL 32025
(386) 292-2541

**PV SYSTEM INFORMATION**

SYSTEM SIZE (DC ): 11.48 KW
28 MODULES: HANWHA Q.PEAK DUO BLK ML-G10+ 410
28 INVERTERS: ENPHASE IQ8MC-72-M-US

**PROJECT INFORMATION**

| | | |
|---|---|---|
| INITIAL | DATE: 8/1/2024 | DESIGNER: AKL |
| REV: | DATE: | DESIGNER: |
| REV: | DATE: | DESIGNER: |

ELECTRICAL CONT.

**PV-3.1**

ALL WARNING SIGN(S) OR LABEL(S) SHALL COMPLY WITH NEC ARTICLE 110.21(B). LABEL WARNINGS SHALL ADEQUATELY WARN OF THE HAZARD. LABELS SHALL BE PERMANENTLY AFFIXED TO THE EQUIPMENT, AND LABELS REQUIRED SHALL BE SUITABLE FOR THE ENVIRONMENT.

| TAG | LABEL | QUANTITY | LOCATION | NOTE |
|---|---|---|---|---|
| | CAUTION<br>AC SOLAR VOLTAGE | 12 | AC CONDUITS | 1 AT EVERY SEPARATION BY ENCLOSURES / WALLS / PARTITIONS / CEILINGS / FLOORS OR NO MORE THAN 10' |
| | WARNING: PHOTOVOLTAIC POWER SOURCE<br>PHOTOVOLTAIC SYSTEM EQUIPPED WITH RAPID SHUTDOWN | 1 | COMBINER BOX | 1 AT ANY COMBINER BOX |
| | WARNING<br>ELECTRICAL SHOCK HAZARD<br>TERMINALS ON BOTH LINE AND LOAD SIDES MAY BE ENERGIZED IN THE OPEN POSITION | 1 | JUNCTION BOX | 1 AT ANY JUNCTION BOX |
| | PHOTOVOLTAIC SYSTEM<br>AC DISCONNECT<br>RATED AC OUTPUT CURRENT 37.24 A<br>NOMINAL OPERATING AC VOLTAGE 240 V<br>WARNING<br>ELECTRICAL SHOCK HAZARD<br>TERMINALS ON BOTH LINE AND LOAD SIDES MAY BE ENERGIZED IN THE OPEN POSITION<br>CAUTION<br>POWER TO THIS SERVICE IS ALSO SUPPLIED FROM ON-SITE SOLAR GENERATION<br>AC SYSTEM DISCONNECT<br>RAPID SHUTDOWN SWITCH FOR SOLAR PV SYSTEM<br>PHOTOVOLTAIC SYSTEM INSTALLED BY MOMENTUM SOLAR 3096 B HAMILTON BLVD S. PLAINFIELD, NJ 07080 PHONE NUMBER:732-902-6224 | 1 | AC DISCONNECT (RSD SWITCH) | 1 OF EACH AT FUSED AC DISCONNECT COMPLETE VOLTAGE AND CURRENT VALUES ON DISCONNECT LABEL |
| | WARNING<br>DUAL POWER SUPPLY<br>SECOND SOURCE IS PHOTOVOLTAIC SYSTEM<br>REVENUE METER | 1 | UTILITY METER | 1 AT UTILITY METER |
| | EMERGENCY RESPONDER<br>THIS SOLAR PV SYSTEM EQUIPPED WITH RAPID SHUTDOWN<br>TURN RAPID SHUTDOWN SWITCH TO THE "OFF" POSITION TO SHUT DOWN ENTIRE PV SYSTEM<br>SECTIONS OF THE PV SYSTEM THAT ARE SHUT DOWN WHEN THE RAPID SHUTDOWN SWITCH IS OPERATED<br>SECTIONS OF THE PV SYSTEM THAT ARE NOT SHUT DOWN WHEN THE RAPID SHUTDOWN SWITCH IS OPERATED<br>SOLAR ELECTRIC PV PANELS<br>WARNING<br>DUAL POWER SUPPLY<br>SECOND SOURCE IS PHOTOVOLTAIC SYSTEM | 1 | INTERCONNECTION POINT | 1 OF EACH AT BUILDING INTERCONNECTION POINT |
| | WARNING<br>POWER SOURCE OUTPUT CONNECTION. DO NOT RELOCATE THIS OVERCURRENT DEVICE | 1 | BACKFEED PANEL | |
| | NOMINAL OPERATING AC VOLTAGE : 240V<br>NOMINAL OPERATING AC FREQUENCY : 60HZ<br>MAXIMUM AC POWER : VA<br>MAXIMUM AC CURRENT : A<br>MAXIMUM OVERCURRENT DEVICE RATING FOR AC MODULE PROTECTION : 20A | 1 | AC CURRENT PV MODULES | |

EXAMPLES

**SOLAR INSTALLER NOTES:**
**REPLACE EXISTING INTERIOR 100A BUS RATED MAIN SERVICE PANEL WITH NEW INTERIOR 100A BUS RATED MAIN SERVICE PANEL WITH 100A MAIN BREAKER.**

momentum SOLAR

PRO CUSTOM SOLAR LLC D.B.A. MOMENTUM SOLAR
325 HIGH STREET, METUCHEN, NJ 08840
(732) 902-6224
MOMENTUMSOLAR.COM

**PROFESSIONAL ENGINEERING**

MINA A. MAKAR
LICENSE
No PE86753
STATE OF FLORIDA
PROFESSIONAL ENGINEER

Digitally signed by
Reason: Digitally signed by Mina A Makar. Reason: This item has been electronically signed and sealed by [Mina A. Makar, PE 86753, COA # 33404] on the Date and Time Stamp shown using a digital signature. Printed copies of this document are not considered signed and sealed and the signature must be verified on any electronic copies
Date: 2024.08.02 09:08:33 -05:00

**SOLAR CONTRACTOR**

CAMERON CHRISTENSEN
CERTIFIED SOLAR CONTRACTOR LICENSE NUMBER: CVC57036
MOMENTUM SOLAR
5728 MAJOR BLVD. SUITE 307, ORLANDO FL. 32819

**CUSTOMER INFORMATION**

BARBARA JEFFERSON - MS155362
564 SE DEFENDER DR
LAKE CITY, FL 32025
(386) 292-2541

**PV SYSTEM INFORMATION**

SYSTEM SIZE (DC ): 11.48 KW
28 MODULES: HANWHA Q.PEAK DUO BLK ML-G10+ 410
28 INVERTERS: ENPHASE IQ8MC-72-M-US

**PROJECT INFORMATION**

| | | |
|---|---|---|
| INITIAL | DATE: 8/1/2024 | DESIGNER: AKL |
| REV: | DATE: | DESIGNER: |
| REV: | DATE: | DESIGNER: |

EQUIPMENT LABELS

**PV-3.2**