DATE 06/07/2007

Columbia County Building Permit

This Permit Expires One Year From the Date of Issue

PERMIT
000025895

APPLICANT ANGIE BLATTER PHONE 755-0247

ADDRESS 187 SW VELMA GLN LAKE CITY FL 32024

OWNER LEE BLATTER PHONE 386.804.3178

ADDRESS 187 SW VELMA GLEN LAKE CITY FL 32024

CONTRACTOR OWNER BUILDER PHONE 755-0247

LOCATION OF PROPERTY 47-S PAST SCHOOL TO 1 1/2 MILES TO VELMA GLN,TL AND IT'S 500' ON THE NORTH SIDE OF ROAD.

TYPE DEVELOPMENT SFD,UTILITY ESTIMATED COST OF CONSTRUCTION 104200.00

HEATED FLOOR AREA 2084.00 TOTAL AREA 3076.00 HEIGHT STORIES 1

FOUNDATION CONC WALLS FRAMED ROOF PITCH 6/12 FLOOR SLAB

LAND USE & ZONING A-3 MAX. HEIGHT

Minimum Set Back Requirments: STREET-FRONT 30.00 REAR 25.00 SIDE 25.00

NO. EX.D.U. 1 FLOOD ZONE X DEVELOPMENT PERMIT NO.

PARCEL ID 15-5S-16-03622-024 SUBDIVISION VELMA GLEN

LOT BLOCK PHASE UNIT 0 TOTAL ACRES

Culvert Permit No.	Culvert Waiver	Contractor's License Number	Applicant/Owner/Contractor	
EXISTING	07-389	BK	JH	N
Driveway Connection	Septic Tank Number	LU & Zoning checked by	Approved for Issuance	New Resident

COMMENTS: ONE FOOT ABOVE THE ROAD, NOC ON FILE

EXISTING MH TO BE REMOVED WITHIN 45 DAYS OF ISSUING CO

Check # or Cash 616

FOR BUILDING & ZONING DEPARTMENT ONLY

(footer/Slab)

Temporary Power date/app. by Foundation date/app. by Monolithic date/app. by

Under slab rough-in plumbing date/app. by Slab date/app. by Sheathing/Nailing date/app. by

Framing date/app. by Rough-in plumbing above slab and below wood floor date/app. by

Electrical rough-in date/app. by Heat & Air Duct date/app. by Peri. beam (Lintel) date/app. by

Permanent power date/app. by C.O. Final date/app. by Culvert date/app. by

M/H tie downs, blocking, electricity and plumbing date/app. by Pool date/app. by

Reconnection date/app. by Pump pole date/app. by Utility Pole date/app. by

M/H Pole date/app. by Travel Trailer date/app. by Re-roof date/app. by

BUILDING PERMIT FEE $ 525.00 CERTIFICATION FEE $ 15.38 SURCHARGE FEE $ 15.38

MISC. FEES $ 0.00 ZONING CERT. FEE $ 50.00 FIRE FEE $ 0.00 WASTE FEE $

FLOOD DEVELOPMENT FEE $ FLOOD ZONE FEE $ 25.00 CULVERT FEE $ **TOTAL FEE** 630.76

INSPECTORS OFFICE CLERKS OFFICE CH

NOTICE: IN ADDITION TO THE REQUIREMENTS OF THIS PERMIT, THERE MAY BE ADDITIONAL RESTRICTIONS APPLICABLE TO THIS PROPERTY THAT MAY BE FOUND IN THE PUBLIC RECORDS OF THIS COUNTY. AND THERE MAY BE ADDITIONAL PERMITS REQUIRED FROM OTHER GOVERNMENTAL ENTITIES SUCH AS WATER MANAGEMENT DISTRICTS, STATE AGENCIES, OR FEDERAL AGENCIES.

"WARNING TO OWNER: YOUR FAILURE TO RECORD A NOTICE OF COMMENCEMENT MAY RESULT IN YOUR PAYING TWICE FOR IMPROVEMENTS TO YOUR PROPERTY. IF YOU INTEND TO OBTAIN FINANCING, CONSULT WITH YOUR LENDER OR AN ATTORNEY BEFORE RECORDING YOUR NOTICE OF COMMENCEMENT."

This Permit Must Be Prominently Posted on Premises During Construction

PLEASE NOTIFY THE COLUMBIA COUNTY BUILDING DEPARTMENT AT LEAST 24 HOURS IN ADVANCE OF EACH INSPECTION, IN ORDER THAT IT MAY BE MADE WITHOUT DELAY OR INCONVIENCE, PHONE 758-1008. THIS PERMIT IS NOT VALID UNLESS THE WORK AUTHORIZED BY IT IS COMMENCED WITHIN 6 MONTHS AFTER ISSUANCE.

The Issuance of this Permit Does Not Waive Compliance by Permittee with Deed Restrictions.

CK# 616

Columbia County Building Permit Application

Office Use Only Application # 0705-44 Date Received 5/21/07 By LH Permit # 25895

Application Approved by - Zoning Official BLK Date 31.05.07 Plans Examiner DRUTH Date 6-6-06

Flood Zone X Development Permit N/A Zoning A-3 Land Use Plan Map Category A-3

Comments Existing MH to be removed within 45 days of issuing CO.

☑ NOC ☑ EH ☑ Deed or PA ☐ Site Plan N/A State Road Info ☐ Parent Parcel # ☐ Development Permit

Name Authorized Person Signing Permit Angie Lee Blatter Phone 386 755-0247 Fax

Address 187 SW Velma Gln Lake City FL 32024

Owners Name SAME Phone

911 Address 187 SW Velma Glen, L.C. 32024

Contractors Name Owner Phone

Address

Fee Simple Owner Name & Address NA

Bonding Co. Name & Address NA

Architect/Engineer Name & Address

Mortgage Lenders Name & Address NA

Circle the correct power company - FL Power & Light - Clay Elec. - Suwannee Valley Elec. - Progressive Energy

Property ID Number 15-5S-16-03622-024 Estimated Cost of Construction $165,000

Subdivision Name NA Lot ____ Block ____ Unit ____ Phase ____

Driving Directions 47-S, .8 miles past blinking light to Velma Glen, East 500' on North side of Road.

Type of Construction House SFD Number of Existing Dwellings on Property 1

Total Acreage 4.02 Lot Size ____ Do you need a - Culvert Permit or Culvert Waiver or Have an Existing Drive

Actual Distance of Structure from Property Lines - Front 202' Side 180' Side 139' Rear 222'

Total Building Height 20' Number of Stories 1 Heated Floor Area 2084 ft² TOTAL 3076 Roof Pitch 6/12

Application is hereby made to obtain a permit to do work and installations as indicated. I certify that no work or installation has commenced prior to the issuance of a permit and that all work be performed to meet the standards of all laws regulating construction in this jurisdiction.

OWNERS AFFIDAVIT: I hereby certify that all the foregoing information is accurate and all work will be done in compliance with all applicable laws and regulating construction and zoning.

WARNING TO OWNER: YOUR FAILURE TO RECORD A NOTICE OF COMMENCMENT MAY RESULT IN YOU PAYING TWICE FOR IMPROVEMENTS TO YOUR PROPERTY. IF YOU INTEND TO OBTAIN FINANCING, CONSULT WITH YOUR LENDER OR ATTORNEY BEFORE RECORDING YOUR NOTICE OF COMMENCEMENT.

Owner Builder or Authorized Person by Notarized Letter

Contractor Signature
Contractors License Number
Competency Card Number
NOTARY STAMP/SEAL

STATE OF FLORIDA
COUNTY OF COLUMBIA

Sworn to (or affirmed) and subscribed before me this 21 day of May 2007.

Personally known ✓ or Produced Identification ____

LORRAINE M. BRUZIK
Notary Public, State of Florida
Commission# DD591327
My comm. expires Sept. 12, 2010

Notary Signature

(Revised Sept. 2006)

25895

Notice of Treatment

Applicator: Florida Pest Control & Chemical Co. (www.flapest .com)
Address: Baya Ave
City Lake City Phone 752-1703

Site Location: Subdivision N/A
Lot # N/A Block# Permit # 25895
Address 187 SW Velma GLN

Product used	Active Ingredient	% Concentration
☑ Premise	Imidacloprid	0.1%
☐ Termidor	Fipronil	0.12%
☐ Bora-Care	Disodium Octaborate Tetrahydrate	23.0%

Type treatment: ☑ Soil ☐ Wood

Area Treated	Square feet	Linear feet	Gallons Applied
Dwelling/Porches/Garage	3072	224	200

As per Florida Building Code 104.2.6 – If soil chemical barrier method for termite prevention is used, final exterior treatment shall be completed prior to final building approval.

If this notice is for the final exterior treatment, initial this line _____.

6/13/07 — Date
0800 — Time
Fish Gunny — Print Technician's Name

Remarks: _____

Applicator - White Permit File - Canary Permit Holder - Pink

10/05 ©

Notice of Treatment

ADD TO 12518

Applicator: Florida Pest Control & Chemical Co. (www.flapest .com)
Address: 536 SW BAYA AVE
City LAKE CITY Phone 752-1703

Site Location: Subdivision
Lot # Block# Permit # 25895
Address 187 SW Velma Gln

Product used	Active Ingredient	% Concentration
☐ Premise	Imidacloprid	0.1%
☐ Termidor	Fipronil	0.12%
☒ Bora-Care	Disodium Octaborate Tetrahydrate	23.0%

Type treatment: ☐ Soil ☒ Wood

Area Treated	Square feet	Linear feet	Gallons Applied
Dwelling	3072	240	7½ gals

As per Florida Building Code 104.2.6 – If soil chemical barrier method for termite prevention is used, final exterior treatment shall be completed prior to final building approval.

If this notice is for the final exterior treatment, initial this line _____.

9-27-07	8:20	F299
Date	Time	Print Technician's Name

Remarks:

Applicator - White **Permit File** - Canary **Permit Holder** - Pink

10/05 ©

NOTICE OF COMMENCEMENT FORM
COLUMBIA COUNTY, FLORIDA

THIS DOCUMENT MUST BE RECORDED AT THE COUNTY CLERKS OFFICE BEFORE YOUR FIRST INSPECTION

THE UNDERSIGNED hereby gives notice that improvement will be made to certain real property, and inaccordance with Chapter 713, Florida Statutes, the following information is provided in this Notice of Commencement.
IF YOU INTEND TO OBTAIN FINANCING, CONSULT WITH YOUR LENDER OR AN ATTORNEY BEFORE RECORDING YOUR NOTICE OF COMMENCEMENT.

Tax Parcel ID Number 15-5S-16-03622-024 **Permit Number** _____

1. Description of property: (legal description of the property and street address or 911 address)
187 SW Velma Gln, Lake City, FL 32024

2. General description of improvement: New house construction

3. Owner Name & Address Lee Blather; 187 SW Velma Gln Lake City, FL 32024 **Interest in Property** 100%

4. Name & Address of Fee Simple Owner (if other than owner): _____

5. Contractor Name ~~Owner~~ Lee Blather **Phone Number** 386 755-0247
Address ~~[illegible]~~ 187 SW Velma Gln Lake City 32024

6. Surety Holders Name NA **Phone Number** _____
Address _____
Amount of Bond _____

Inst:2007011278 Date:05/21/2007 Time:08:38
D.T. DC,P.DeWitt Cason,Columbia County B:1119 P:2128

7. Lender Name NA
Address _____

✓ **8. Persons within the State of Florida designated by the Owner upon whom notices or other documents may be served as provided by section 718.13 (1)(a) 7; Florida Statutes:**
Name _____ **Phone Number** _____
Address _____

✓ **9. In addition to himself/herself the owner designates** _____ **of** _____ **to receive a copy of the Lien Notice as provided in Section 713.13 (1) – (a) 7. Phone Number of the designee** _____

10. Expiration date of the Notice of Commencement (the expiration date is 1 (one) year from the date of recording, (Unless a different date is specified) _____

THE OWNER MUST SIGN THE NOTICE OF COMMENCEMENT AND NO ONE ELSE MAY BE PERMITTED TO SIGN IN HIS/HER STEAD.

Lee Blather
Signature of Owner

Sworn to (or affirmed) and subscribed before day of May 18, **20** 07.

Lorraine M. Bruzik **NOTARY STAMP/SEAL**
Signature of Notary

LORRAINE M. BRUZIK
Notary Public, State of Florida
Commission# DD591327
My comm. expires Sept. 12, 2010

STATE OF FLORIDA
DEPARTMENT OF HEALTH

APPLICATION FOR ONSITE SEWAGE DISPOSAL SYSTEM CONSTRUCTION PERMIT

Permit Application Number 07-389

PART II - SITE PLAN

Scale: Each block represents 5 feet and 1 inch = 50 feet.

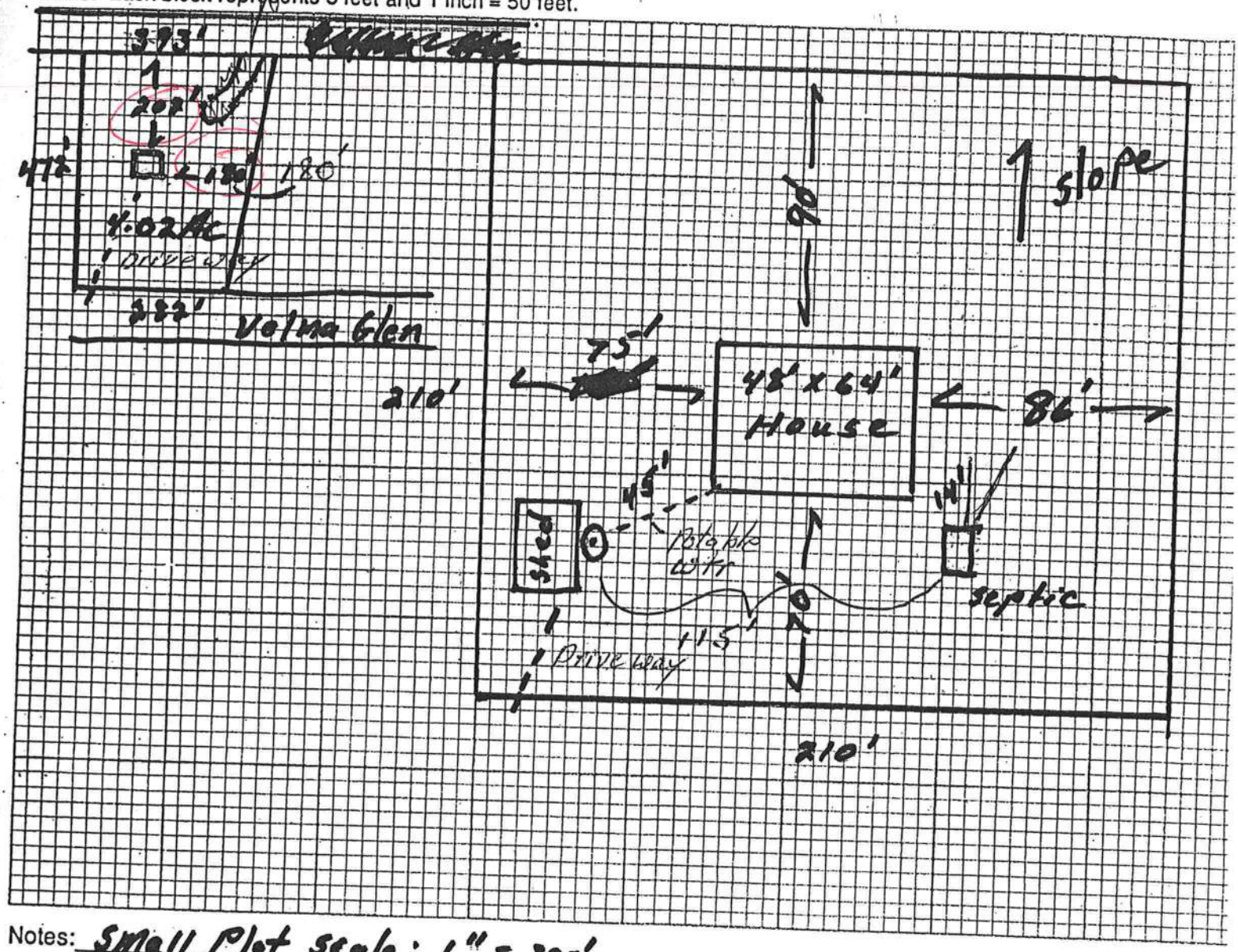

Notes: Small Plat Scale: 1" = 300'

Site Plan submitted by: Lee Blatto
Signature

owner
Title

Plan Approved ✓

Not Approved _____

Date 5/18/07

By M o h

Columbia County Health Department

ALL CHANGES MUST BE APPROVED BY THE COUNTY HEALTH DEPARTMENT

DH 4015, 10/96 (Replaces HRS-H Form 4015 which may be used)
(Stock Number: 5744-002-4015-6)

This Instrument Prepared by & return to:
Name: JOYCE KIRPACH, an employee of TITLE OFFICES, LLC
Address: 1089 SW MAIN BLVD. LAKE CITY, FLORIDA 32025
File No. 05Y-05144JK

Inst:2005016390 Date:07/12/2005 Time:15:06
Doc Stamp-Deed : 385.00
MK DC,P.DeWitt Cason,Columbia County B:1051 P:1623

Parcel I.D. #: 03622-024

SPACE ABOVE THIS LINE FOR PROCESSING DATA | *SPACE ABOVE THIS LINE FOR RECORDING DATA*

THIS WARRANTY DEED *Made the 28th day of June, A.D. 2005, by*

JOHN M. DEMOREST, single, *hereinafter called the grantor, to*

C. LEE BLATTER and ANGELA M. BLATTER, HIS WIFE, whose post office address is

3706 NW HUNTSBORO ST, #102, LAKE CITY, FL 32055, hereinafter called the grantees:

(Wherever used herein the terms "grantor" and "grantees" include all the parties to this instrument, singular and plural, the heirs, legal representatives and assigns of individuals, and the successors and assigns of corporations, wherever the context so admits or requires.)

Witnesseth: *That the grantor, for and in consideration of the sum of $10.00 and other valuable consideration, receipt whereof is hereby acknowledged, does hereby grant, bargain, sell, alien, remise, release, convey and confirm unto the grantees all that certain land situate in* ***Columbia County, State of FLORIDA****, viz:*

SECTION 15: A PART OF THE SW ¼ OF THE NE ¼ OF SECTION 15, TOWNSHIP 5 SOUTH, RANGE 16 EAST MORE PARTICULARLY DESCRIBED AS FOLLOWS: COMMENCE AT THE SOUTHWEST CORNER OF THE NE ¼ OF SAID SECTION 15 AND RUN N 0°28'12" W, 343.78 FEET TO THE EASTERLY RIGHT-OF-WAY LINE OF STATE ROAD NO. 47; THENCE N 15°29'30" E ALONG SAID RIGHT-OF-WAY LINE, 530.29 FEET FOR A POINT OF BEGINNING; THENCE N 89°33'46" E, 810.78 FEET; THENCE N 0°21'29" W, 472.34 FEET TO THE NORTH LINE OF THE SAID SW ¼ OF NE ¼; THENCE S 89°33'46" W, ALONG SAID NORTH LINE, 282.72 FEET; THENCE S 15°29'30" W, 460.00 FEET; THENCE S 89°33'46" W, 393.91 FEET TO THE EAST RIGHT-OF-WAY OF SAID STATE ROAD NO. 47; THENCE S 15°29'30" W, 31.20 FEET TO THE POINT OF BEGINNING. SUBJECT TO AN EASEMENT FOR INGRESS AND EGRESS OVER AND ACROSS THE SOUTH 30.0 FEET THEREOF. COLUMBIA COUNTY, FLORIDA.

TOGETHER WITH THE RIGHT OF INGRESS AND EGRESS OVER AND ACROSS A 60.0 FOOT EASEMENT WHOSE CENTERLINE IS DESCRIBED AS FOLLOWS: COMMENCE AT THE SOUTHWEST CORNER OF THE SAID NE ¼ AND RUN N 0°28'12" W, 343.78 FEET; THENCE N 15°29'30" E, 530.29 FEET TO A POINT ON THE EAST RIGHT-OF-WAY OF STATE ROAD NO. 47 FOR A POINT OF BEGINNING FOR CENTERLINE; THENCE N 89°33'46" E, 810.78 FEET TO THE POINT OF TERMINATION FOR SAID EASEMENT.

THE ABOVE DESCRIBED REAL PROPERTY LYING AND BEING IN COLUMBIA COUNTY, FLORIDA.

Subject to declaration of covenants, conditions and restrictions as recited in Special Warranty Deed recorded in Official Records Book 652, Page 638, but omitting any covenant or restrictions as to race, color, religion, sex, handicap, familial status or national origin.

Easement in favor of CLAY ELECTRIC COOPERATIVE, INC., recorded in Official Records Book 684, Page 487, of the Public Records of Columbia County, FLORIDA.

Restrictions or reservations affecting rights in Oil, Gas or any other Minerals, lying upon or beneath the lands insured hereby, pursuant to Special Warranty Deed recorded in Official Records Book 652, Page 638, of the Public Records of Columbia County, FLORIDA. [No determination has been made as to the current record

393.91 FEET TO THE EAST RIGHT-OF-WAY OF SAID STATE ROAD NO. 47; THENCE S 15°29'30" W, 31.20 FEET TO THE POINT OF BEGINNING. SUBJECT TO AN EASEMENT FOR INGRESS AND EGRESS OVER AND ACROSS THE SOUTH 30.0 FEET THEREOF. COLUMBIA COUNTY, FLORIDA.

TOGETHER WITH THE RIGHT OF INGRESS AND EGRESS OVER AND ACROSS A 60.0 FOOT EASEMENT WHOSE CENTERLINE IS DESCRIBED AS FOLLOWS: COMMENCE AT THE SOUTHWEST CORNER OF THE SAID NE ¼ AND RUN N 0°28'12" W, 343.78 FEET; THENCE N 15°29'30" E, 530.29 FEET TO A POINT ON THE EAST RIGHT-OF-WAY OF STATE ROAD NO. 47 FOR A POINT OF BEGINNING FOR CENTERLINE; THENCE N 89°33'46" E, 810.78 FEET TO THE POINT OF TERMINATION FOR SAID EASEMENT.

THE ABOVE DESCRIBED REAL PROPERTY LYING AND BEING IN COLUMBIA COUNTY, FLORIDA.

Subject to declaration of covenants, conditions and restrictions as recited in Special Warranty Deed recorded in Official Records Book 652, Page 638, but omitting any covenant or restrictions as to race, color, religion, sex, handicap, familial status or national origin.

Easement in favor of CLAY ELECTRIC COOPERATIVE, INC., recorded in Official Records Book 684, Page 487, of the Public Records of Columbia County, FLORIDA.

Restrictions or reservations affecting rights in Oil, Gas or any other Minerals, lying upon or beneath the lands insured hereby, pursuant to Special Warranty Deed recorded in Official Records Book 652, Page 638, of the Public Records of Columbia County, FLORIDA. [No determination has been made as to the current record owner of the oil, gas and mineral interests excepted herein.]

Together with all the tenements, hereditaments and appurtenances thereto belonging or in anywise appertaining.

***To Have and to Hold** the same in fee simple forever.*

And the grantor hereby covenants with said grantees that he is lawfully seized of said land in fee simple; that he has good right and lawful authority to sell and convey said land, and hereby fully warrants the title to said land and will defend the same against the lawful claims of all persons whomsoever, and that said land is free of all encumbrances, except taxes accruing subsequent to December 31, 2004.

In Witness Whereof, the said grantor has signed and sealed these presents, the day and year first above written.

Signed, sealed and delivered in the presence of:

Billy Terzi
Witness Signature
Billy Terzi
Printed Name

Bonita Hadwin
Witness Signature
BONITA HADWIN
Printed Name

L.S.
JOHN M. DEMOREST
Address:
187 SW VELMA GLN, LAKE CITY, FL 32024

STATE OF FLORIDA
COUNTY OF COLUMBIA

The foregoing instrument was acknowledged before me this 28th day of June, 2005, by JOHN M. DEMOREST, who is known to me or who has produced Fla Driver Licens. *as identification.*

Bonita Hadwin
Notary Public
My commission expires _____

Bonita Hadwin
MY COMMISSION # DD230004 EXPIRES
August 10, 2007
BONDED THRU TROY FAIN INSURANCE, INC.

Inst:2005016390 Date:07/12/2005 Time:15:06
Doc Stamp-Deed : 385.00
_____DC,P.DeWitt Cason,Columbia County B:1051 P:1624

NOTORIZED DISCLOSURE STATEMENT

FOR OWNER/BUILDER WHEN ACTING AS THER OWN CONTRACTOR AND CLAIMING EXEMPTION OF CONTRACTOR LICENSING REQUIREMENTS IN ACCORDANCE WITH FLORIDA STATUTES, ss. 489.103(7).

State law requires construction to be done by licensed contractors. You have applied for a permit under an exemption to that law. The exemption allows you, as the owner of your property, to act as your own contractor with certain restrictions even though you do not have a license. You must provide direct, onsite supervision of the construction yourself. You may build or improve a one-family or two-family residence or a farm outbuilding. You may also build or improve a commercial building, provided your costs do not exceed $75,000. The building or residence must be for your own use or occupancy. It may not be built or substantially improved for sale or lease. If you sell or lease a building you have built or substantially improved yourself within 1 year after the construction is complete, the law will presume that you built or substantially improved it for sale or lease, which is a violation of this exemption. You may not hire an unlicensed person to act as your contractor or to supervise people working on your building. It is your responsibility to make sure that people employed by you have licenses required by state law and by county or municipal licensing ordinances. You may not delegate the responsibility for supervising work to a licensed contractor who is not licensed to perform the work being done. Any person working on your building who is not licensed must work under your direct supervision and must be employed by you, which means that you must deduct F .I.C.A. and withholding tax and provide workers' compensation for that employee, all as prescribed by law. Your construction must comply with all applicable laws, ordinances, building codes, and zoning regulations.

TYPE OF CONSTRUCTION

(✓) Single Family Dwelling
( ) Farm Outbuilding
( ) Two-Family Residence
( ) Other_____

NEW CONSTRUCTION OR IMPROVEMENT

(✓) New Construction
( ) Addition, Alteration, Modification or other Improvement

I Lee Blather **, have been advised of the above disclosure statement for exemption from contractor licensing as an owner/builder. I agree to comply with all requirements provided for in Florida Statutes ss.489.103(7) allowing this exception for the construction permitted by Columbia County Building Permit Number _____**

Lee Blather 4/16/07
Owner Builder Signature **Date**

The above signer is personally known to me or produced identification _____

LORRAINE M. BRUZIK
Notary Public, State of Florida
Commission# DD591327
My comm. expires Sept. 12, 2010

Notary Signature Lorraine M. B **Date** 5/18/07 **(Stamp / Seal)**

FOR BUILDING USE ONLY

I hereby certify that the above listed owner/builder has been notified of the disclosure statement in Florida Statutes ss 489.103(7).

Date_____ Building Official/Representative_____

Columbia County Property Appraiser

J. Doyle Crews, CFA - Lake City, Florida - 386-758-1083

PARCEL: 15-5S-16-03622-024 HX - MOBILE HOM (000200)

Name:	BLATTER C LEE & ANGELA M	LandVal	$42,950.00
Site:	VELMA	BldgVal	$40,942.00
Mail:	187 SW VELMA GLN LAKE CITY, FL 32024	ApprVal	$91,992.00
		JustVal	$91,992.00
Sales Info	7/6/2005 $100.00 I / U	Assd	$86,097.00
	6/28/2005 $55,000.00 I / U	Exmpt	$25,000.00
	3/21/2000 $9,800.00 V / U	Taxable	$61,097.00

0 0.05 0.1 0.15 mi

N W E S

This information, GIS Map Updated: 5/11/2007, was derived from data which was compiled by the Columbia County Property Appraiser Office solely for the governmental purpose of property assessment. This information should not be relied upon by anyone as a determination of the ownership of property or market value. No warranties, expressed or implied, are provided for the accuracy of the data herein, it's use, or it's interpretation. Although it is periodically updated, this information may not reflect the data currently on file in the Property Appraiser's office. The assessed values are NOT certified values and therefore are subject to change before being finalized for ad valorem assessment purposes.

FORM 600A-2004R

EnergyGauge® 4.5

FLORIDA ENERGY EFFICIENCY CODE FOR BUILDING CONSTRUCTION

Florida Department of Community Affairs

Residential Whole Building Performance Method A

Project Name:	Blatter Residence	Builder:	BlAtter
Address:		Permitting Office:	Columbia
City, State:	,	Permit Number:	25895
Owner:	Lee and Angie Blatter	Jurisdiction Number:	221000
Climate Zone:	North		

1. New construction or existing	New	
2. Single family or multi-family	Single family	
3. Number of units, if multi-family	1	
4. Number of Bedrooms	2	
5. Is this a worst case?	Yes	
6. Conditioned floor area (ft²)	2084 ft²	
7. Glass type[1] and area: (Label reqd. by 13-104.4.5 if not default)		
a. U-factor: (or Single or Double DEFAULT)	Description: Area 7a. (Dble Default) 157.0 ft²	
b. SHGC: (or Clear or Tint DEFAULT)	7b. (Clear) 157.0 ft²	
8. Floor types		
a. Slab-On-Grade Edge Insulation	R=0.0, 274.0(p) ft	
b. N/A		
c. N/A		
9. Wall types		
a. Frame, Wood, Exterior	R=32.0, 1972.0 ft²	
b. N/A		
c. N/A		
d. N/A		
e. N/A		
10. Ceiling types		
a. Under Attic	R=52.0, 2084.0 ft²	
b. N/A		
c. N/A		
11. Ducts		
a. Sup: Unc. Ret: Unc. AH: Interior	Sup. R=6.0, 129.0 ft	
b. N/A		

12. Cooling systems		
a. Central Unit	Cap: 48.0 kBtu/hr SEER: 13.00	
b. N/A		
c. N/A		
13. Heating systems		
a. Electric Heat Pump	Cap: 48.0 kBtu/hr HSPF: 7.70	
b. N/A		
c. N/A		
14. Hot water systems		
a. N/A		
b. N/A		
c. Conservation credits (HR-Heat recovery, Solar DHP-Dedicated heat pump)		
15. HVAC credits (CF-Ceiling fan, CV-Cross ventilation, HF-Whole house fan, PT-Programmable Thermostat, MZ-C-Multizone cooling, MZ-H-Multizone heating)	PT	

Glass/Floor Area: 0.08

Total as-built points: 18151

Total base points: 25242

PASS

I hereby certify that the plans and specifications covered by this calculation are in compliance with the Florida Energy Code.

PREPARED BY: Gary Gill

DATE: 6/1/07

I hereby certify that this building, as designed, is in compliance with the Florida Energy Code.

OWNER/AGENT: _____

DATE: _____

Review of the plans and specifications covered by this calculation indicates compliance with the Florida Energy Code. Before construction is completed this building will be inspected for compliance with Section 553.908 Florida Statutes.

BUILDING OFFICIAL: _____

DATE: _____

1 Predominant glass type. For actual glass type and areas, see Summer & Winter Glass output on pages 2&4.

GTC DESIGN GROUP

GTC DESIGN GROUP, LLC

P.O. BOX 187, LIVE OAK, FLORIDA 32064
PHONE 386.362.3678 - FAX 386.362 6133

FACSIMILE TRANSMITTAL SHEET

TO:	Joe Haltiwanger	FROM:	Gary Gill
COMPANY:	Col. Cty. Bldg. Department	DATE:	6/1/2007
FAX NUMBER:	386-754-7088	TOTAL NO. OF PAGES INCLUDING COVER:	14
PHONE NUMBER:	386-758-1163	REFERENCE NUMBER:	

RE: **Blatter Residence**

☐ URGENT ☐ FOR REVIEW ☐ PLEASE RESPOND ☐ PLEASE REPLY

NOTES/COMMENTS:

If you have any questions, comments, or require additional information, please contact me at your convenience.

Thank you

BUILDING INPUT SUMMARY REPORT

PROJECT

Title:	Blatter Residence	Family Type:	Single	Address Type:	Street Address
Owner:	Lee and Angie Blatter	New/Existing:	New	Lot #:	N/A
# of Units:	1	Bedrooms:	2	Subdivision:	N/A
Builder Name:	(blank)	Conditioned Area:	2084	Platbook:	N/A
Climate:	North	Total Stories:	1	Street:	(blank)
Permit Office:	(blank)	Worst Case:	Yes	County:	(blank)
Jurisdiction #:	(blank)	Rotate Angle:	0	City, St, Zip:	, ,

FLOORS

#	Floor Type	R-Val	Area/Perimeter	Units
1	Slab-On-Grade Edge Insulation	0.0	274.0(p) ft	1

DOORS

#	Door Type	Orientation	Area	Units
1	Wood	Exterior	21.0 ft²	3

CEILINGS

#	Ceiling Type	R-Val	Area	Base Area	Units
1	Under Attic	52.0	2084.0 ft²	2084.0 ft²	1

Credit Multipliers: None

COOLING

#	System Type	Efficiency	Capacity
1	Central Unit	SEER: 13.00	48.0 kBtu/hr

Credit Multipliers: PT

WALLS

#	Wall Type	Location	R-Val	Area	Units
1	Frame - Wood	Exterior	32.0	1972.0 ft²	1

HEATING

#	System Type	Efficiency	Capacity
1	Electric Heat Pump	HSPF: 7.70	48.0 kBtu/hr

Credit Multipliers: PT

WINDOWS

#	Panes	Tint	Ornt	Area	OH Length	OH Hght	Units
1	Double	Clear	N	9.0 ft²	2.0 ft	4.5 ft	1
2	Double	Clear	N	20.0 ft²	2.0 ft	6.3 ft	2
3	Double	Clear	E	15.0 ft²	2.0 ft	0.0 ft	2
4	Double	Clear	S	15.0 ft²	2.0 ft	0.0 ft	2
5	Double	Clear	S	8.0 ft²	2.0 ft	3.3 ft	1
6	Double	Clear	W	10.0 ft²	2.0 ft	6.3 ft	2
7	Double	Clear	W	20.0 ft²	2.0 ft	6.3 ft	[illegible]

DUCTS

#	Supply Location	Return Location	Air Handler Location	Supply R-Val	Supply Length
1	Uncond.	Uncond.	Interior	6.0	129.0 ft

Credit Multipliers: None

WATER

#	System Type	EF	Cap.	Conservation Type	Con. EF

REFR.

#	Use Default?	Annual Operating Cost	Electric Rate
1	Yes	N/A	N/A

MISC

Rater Name:	CodeOnlyPro	Class #:	3	Pool Size:	0
Rater Certification #:	CodeOnlyPro	Duct Leakage Type:	N/A	Pump Size:	0.00 hp
Area Under Fluorescent:	0.0	Visible Duct Disconnects:	N/A	Dryer Type:	Electric
Area Under Incandescent:	2084.0	Leak Free Duct System Proposed:	No	Stove Type:	Electric
NOTE: Not all Rating info shown		HRV/ERV System Present?:	No	Avg Ceil Hgt:	

FORM 600A-2004R

EnergyGauge® 4.5

Code Compliance Checklist

Residential Whole Building Performance Method A - Details

ADDRESS: , , , PERMIT #

6A-21 INFILTRATION REDUCTION COMPLIANCE CHECKLIST

COMPONENTS	SECTION	REQUIREMENTS FOR EACH PRACTICE	CHECK
Exterior Windows & Doors	606.1.ABC.1.1	Maximum .3 cfm/sq ft. window area; .5 cfm/sq.ft. door area.	
Exterior & Adjacent Walls	606.1.ABC.1.2.1	Caulk, gasket, weatherstrip or seal between: windows/doors & frames, surrounding wall; foundation & wall sole or sill plate; joints between exterior wall panels at corners; utility penetrations; between wall panels & top/bottom plates; between walls and floor. EXCEPTION: Frame walls where a continuous infiltration barrier is installed that extends from, and is sealed to, the foundation to the top plate.	
Floors	606.1.ABC.1.2.2	Penetrations/openings >1/3" sealed unless backed by truss or joint members. EXCEPTION: Frame floors where a continuous infiltration barrier is installed that is sealed to the perimeter, penetrations and seams.	
Ceilings	606.1.ABC.1.2.3	Between walls & ceilings; penetrations of ceiling plane of top floor; around shafts, chases, soffits, chimneys, cabinets sealed to continuous air barrier; gaps in gyp board & top plate; attic access. EXCEPTION: Frame ceilings where a continuous infiltration barrier is installed that is sealed at the perimeter, at penetrations and seams.	
Recessed Lighting Fixtures	606.1.ABC.1.2.4	Type IC rated with no penetrations, sealed; or Type IC or non-IC rated, installed inside a sealed box with 1/2" clearance & 3" from insulation; or Type IC rated with < 2.0 cfm from conditioned space, tested.	
Multi-story Houses	606.1.ABC.1.2.5	Air barrier on perimeter of floor cavity between floors.	
Additional Infiltration reqts	606.1.ABC.1.3	Exhaust fans vented to outdoors, dampers, combustion space heaters comply with NFPA, have combustion air.	

6A-22 OTHER PRESCRIPTIVE MEASURES (must be met or exceeded by all residences.)

COMPONENTS	SECTION	REQUIREMENTS	CHECK
Water Heaters	612.1	Comply with efficiency requirements in Table 612.1 ABC.3.2. Switch or clearly marked cir breaker (electric) or cutoff (gas) must be provided. External or built-in heat trap required.	
Swimming Pools & Spas	612.1	Spas & heated pools must have covers (except solar heated). Non-commercial pools must have a pump timer. Gas spa & pool heaters must have a minimum thermal efficiency of 78%.	
Shower heads	612.1	Water flow must be restricted to no more than 2.5 gallons per minute at 80 PSIG.	
Air Distribution Systems	610.1	All ducts, fittings, mechanical equipment and plenum chambers shall be mechanically attached, sealed, insulated, and installed in accordance with the criteria of Section 610. Ducts in unconditioned attics: R-6 min. insulation.	
HVAC Controls	607.1	Separate readily accessible manual or automatic thermostat for each system.	
Insulation	604.1, 602.1	Ceilings-Min. R-19. Common walls-Frame R-11 or CBS R-3 both sides. Common ceiling & floors R-11.	

FORM 600A-2004R

EnergyGauge® 4.5

WATER HEATING & CODE COMPLIANCE STATUS

Residential Whole Building Performance Method A - Details

ADDRESS: , , , PERMIT #:

BASE				AS-BUILT							
WATER HEATING											
Number of Bedrooms	X	Multiplier	= Total	Tank Volume	EF	Number of Bedrooms	X Tank Ratio	X Multiplier	X Credit Multiplier	= Total	
2		2635.00	5270.0			2	1.00	2635.00	1.00	5270.0	
				As-Built Total:						5270.0	

CODE COMPLIANCE STATUS

BASE				AS-BUILT			
Cooling Points +	Heating Points +	Hot Water Points =	Total Points	Cooling Points +	Heating Points +	Hot Water Points =	Total Points
8273	11700	5270	25242	5055	7826	5270	18151

PASS

`FORM 600A-2004R

EnergyGauge® 4.5

WINTER CALCULATIONS

Residential Whole Building Performance Method A - Details

ADDRESS: , , , PERMIT #:

BASE			AS-BUILT						
Winter Base Points:		21118.5	Winter As-Built Points:						16005.6
Total Winter Points	X System Multiplier	= Heating Points	Total Component (System - Points)	X Cap Ratio	X Duct Multiplier (DM x DSM x AHU)	X System Multiplier	X Credit Multiplier	= Heating Points	
			(sys 1: Electric Heat Pump 48000 btuh ,EFF(7.7) Ducts:Unc(S),Unc(R),Int(AH),R6.0						
21118.5	0.5540	11699.7	16005.6 16005.6	1.000 1.00	(1.069 x 1.169 x 0.93) 1.162	0.443 0.443	0.950 0.950	7825.9 7825.9	

FORM 600A-2004R

EnergyGauge® 4.5

WINTER CALCULATIONS

Residential Whole Building Performance Method A - Details

ADDRESS: , , , PERMIT #:

BASE

GLASS TYPES

18 X Conditioned Floor Area	X BWPM	= Points
.18 2084.0	20.17	7566.0

WALL TYPES

	Area X	BWPM =	Points
Adjacent	0.0	0.00	0.0
Exterior	1972.0	3.70	7296.4
Base Total:	1972.0		7296.4

DOOR TYPES

	Area X	BWPM =	Points
Adjacent	0.0	0.00	0.0
Exterior	63.0	12.30	774.9
Base Total:	63.0		774.9

CEILING TYPES

	Area X	BWPM =	Points
Under Attic	2084.0	2.05	4272.2
Base Total:	2084.0		4272.2

FLOOR TYPES

	Area X	BWPM =	Points
Slab	274.0(p)	8.9	2438.6
Raised	0.0	0.00	0.0
Base Total:			2438.6

INFILTRATION

Area X	BWPM =	Points
2084.0	-0.59	-1229.6

AS-BUILT

Type/SC	Overhang Ornt	Len	Hgt	Area X	WPM X	WOF =	Points
1.Double, Clear	N	2.0	4.5	9.0	24.58	1.01	222.0
2.Double, Clear	N	2.0	6.3	40.0	24.58	1.00	987.0
3.Double, Clear	E	2.0	0.0	30.0	18.79	1.51	849.0
4.Double, Clear	S	2.0	0.0	30.0	13.30	3.66	1460.0
5.Double, Clear	S	2.0	3.3	8.0	13.30	1.90	201.0
6.Double, Clear	W	2.0	6.3	20.0	20.73	1.04	430.0
7.Double, Clear	W	2.0	6.3	20.0	20.73	1.04	430.0
As-Built Total:				157.0			4579.0

Type	R-Value	Area X	WPM =	Points
1. Frame, Wood, Exterior	32.0	1972.0	1.50	2958.0
As-Built Total:		1972.0		2958.0

Type	Area X	WPM =	Points
1.Exterior Wood	63.0	12.30	774.9
As-Built Total:	63.0		774.9

Type	R-Value	Area X	WPM X	WCM =	Points
1. Under Attic	52.0	2084.0	1.81 X	1.00	3772.0
As-Built Total:		2084.0			3772.0

Type	R-Value	Area X	WPM =	Points
1. Slab-On-Grade Edge Insulation	0.0	274.0(p	18.80	5151.2
As-Built Total:		274.0		5151.2

Area X	WPM =	Points
2084.0	-0.59	-1229.6

FORM 600A-2004R

EnergyGauge® 4.5

SUMMER CALCULATIONS

Residential Whole Building Performance Method A - Details

ADDRESS: , , , PERMIT #:

BASE				AS-BUILT						
Summer Base Points: 25454.7				Summer As-Built Points:						17987.0
Total Summer Points	X System Multiplier	= Cooling Points		Total Component (System - Points)	X Cap Ratio	X Duct Multiplier (DM x DSM x AHU)	X System Multiplier	X Credit Multiplier	= Cooling Points	
				(sys 1: Central Unit 48000btuh SEER/EFF(13.0) Ducts:Unc(S),Unc(R),Int(AH),R6.0(INS)						
25454.7	0.3250	8272.8		17987 17987.0	1.00 1.00	(1.09 x 1.147 x 0.91) 1.138	0.260 0.260	0.950 0.950	5054.6 5054.6	

FORM 600A-2004R

EnergyGauge® 4.5

SUMMER CALCULATIONS

Residential Whole Building Performance Method A - Details

ADDRESS: , , , PERMIT #:

BASE

GLASS TYPES .18 X Conditioned Floor Area	X BSPM	= Points
.18 2084.0	18.59	6973.0

WALL TYPES	Area X	BSPM =	Points
Adjacent	0.0	0.00	0.0
Exterior	1972.0	1.70	3352.4
Base Total:	1972.0		3352.4

DOOR TYPES	Area X	BSPM =	Points
Adjacent	0.0	0.00	0.0
Exterior	63.0	6.10	384.3
Base Total:	63.0		384.3

CEILING TYPES	Area X	BSPM =	Points
Under Attic	2084.0	1.73	3605.3
Base Total:	2084.0		3605.3

FLOOR TYPES	Area X	BSPM =	Points
Slab	274.0(p)	-37.0	-10138.0
Raised	0.0	0.00	0.0
Base Total:			-10138.0

INFILTRATION	Area X	BSPM =	Points
	2084.0	10.21	21277.6

AS-BUILT

Type/SC	Overhang Ornt	Len	Hgt	Area X	SPM X	SOF =	Points
1.Double, Clear	N	2.0	4.5	9.0	19.20	0.85	147.0
2.Double, Clear	N	2.0	6.3	40.0	19.20	0.91	697.0
3.Double, Clear	E	2.0	0.0	30.0	42.06	0.36	450.0
4.Double, Clear	S	2.0	0.0	30.0	35.87	0.43	464.0
5.Double, Clear	S	2.0	3.3	8.0	35.87	0.61	175.0
6.Double, Clear	W	2.0	6.3	20.0	38.52	0.86	665.0
7.Double, Clear	W	2.0	6.3	20.0	38.52	0.86	665.0
As-Built Total:				157.0			3263.0

Type	R-Value	Area X	SPM =	Points
1. Frame, Wood, Exterior	32.0	1972.0	0.60	1183.2
As-Built Total:		1972.0		1183.2

Type	Area X	SPM =	Points
1.Exterior Wood	63.0	6.10	384.3
As-Built Total:	63.0		384.3

Type	R-Value	Area X	SPM X SCM =	Points
1. Under Attic	52.0	2084.0	1.52 X 1.00	3167.7
As-Built Total:		2084.0		3167.7

Type	R-Value	Area X	SPM =	Points
1. Slab-On-Grade Edge Insulation	0.0	274.0(p	-41.20	-11288.8
As-Built Total:		274.0		-11288.8

	Area X	SPM =	Points
	2084.0	10.21	21277.6

06-14-07
Permit # 25895
Parcel # 15-5S-16-03622-024

Mr. Lee Blatter stated that he, with his Transit determined that his finished floor elevation would be 15 inches above the road on the east side of his dwelling and 12 & ¼ inches above the road on the west side.

Architectural Testing

AAMA/NWWDA 101/I.S.2-97 TEST REPORT

Rendered to:

SIMONTON WINDOWS
One Cochrane Avenue
Pennsboro, West Virginia 26415

Report No:	01-45243.02
Test Dates:	05/05/03
And:	03/06/02
Report Date:	05/27/03
Expiration Date:	05/05/07

Project Summary: Architectural Testing, Inc. (ATI) was contracted by Simonton Windows to witness performance tests on a Series/Model 40-06, PVC single hung window (Oriel) at their test facility located in Pennsboro, West Virginia. The sample tested successfully met the performance requirements for an H-R50* 36 x 84 rating. Reference ATI Report No. 05-30301.01 for gateway performance results.

Note: An asterisk added to the performance grade indicates the size tested was smaller than the minimum test size.

Test Specification: The test specimen was evaluated in accordance with AAMA/NWWDA 101/I.S.2-97, *Voluntary Specifications for Aluminum, Vinyl (PVC) and Wood Windows and Glass Doors.*

Test Specimen Description:

Series/Model: 40-06 with E8 Reinforcement

Type: Poly Vinyl Chloride (PVC) Single Hung Window (Oriel)

Overall Size: 3' 0" wide by 7' 0" high

Sash Size: 2' 9-3/4" wide by 2' 0-3/4" high

Fixed Daylight Opening Size: 2' 6-7/8" wide by 4' 6-5/8' high

Screen Size: 2' 8" wide by 1' 11-7/8" high

130 Derry Court
York, PA 17402-9405
phone: 717.764.7700
fax: 717.764.4129
www.archtest.com

Test Specimen Description: (Continued)

Finish: All vinyl was white.

Glazing Details: The sash and fixed lite were glazed with 3/4" thick sealed insulating glass fabricated from two sheets of 3/32" thick annealed glass separated by a metal spacer system. The sash was exterior glazed with silicone and held-in-place with dual durometer snap-in vinyl glazing beads. The fixed lite was interior glazed with 1/2" by 3/32" double-sided foam glazing tape and held-in-place with snap-in vinyl glazing beads.

Weatherstripping:

Description	Quantity	Location
0.187" backed by 0.270" high pile with center fin	1 Row	Sill
0.187" backed by 0.250" high pile with center fin	1 Row	Active meeting rail
0.187" backed by 0.290" high pile with center fin	2 Rows	Sash stiles
0.400" diameter vinyl jacket foam filled single leaf bulb gasket	1 Row	Sash bottom rail

Frame Construction: The PVC frame were constructed using mitered and welded corner construction. The fixed meeting rail was fastened to the jambs using three #8 x 3" long fasteners per end. Self adhesive pads/tape were applied over the fabrication holes.

Sash Construction: The PVC sash was constructed using mitered and welded corner construction.

Screen Construction: The screen was constructed with roll-formed aluminum. The corners were square cut and secured using plastic corner keys. The screen mesh was held-in-place with a flexible vinyl spline.

Test Results: (Continued)

Paragraph	Title of Test - Test Method	Results	Allowed
Optional Performance			
4.3	Water Resistance (ASTM E 547) (with and without screen) WTP = 7.50 psf	No leakage	No leakage
4.4.1	Uniform Load Deflection (ASTM E 330-97) (Measurements reported were taken on the meeting rail)		
	@ 50.0 psf (positive)	0.716"	See Note #2
	@ 50.0 psf (negative)	0.653"	See Note #2

Note #2: The Uniform Load Deflection test is not an AAMA/NWWDA 101/I.S.2-97 requirement for this product designation. The data is recorded in this report for information only.

4.4.2	Uniform Load Structural (ASTM E 330-97) (Measurements reported were taken on the meeting rail)		
	@ 75.0 psf (positive)	0.073"	0.124" max.
	@ 75.0 psf (negative)	0.085"	0.124" max.

Detailed drawings, representative samples of the test specimen, and a copy of this report will be retained by ATI for a period of four years. The above results were secured by using the designated test methods and they indicate compliance with the performance requirements of the above referenced specification. This report does not constitute certification of this product, which may only be granted by the certification program administrator. This report may not be reproduced, except in full, without the approval of Architectural Testing.

For ARCHITECTURAL TESTING, INC:

Jeffrey L Dideon
Project Manager

Michael L. Mackereth
Director - Operations

JLD:jld/nfb
01-45243.02

Test Specimen Description: (Continued)

Hardware:

Description	Quantity	Location
Metal cam lock and keeper	2	Meeting rail, 8" in from each end with keepers aligned on fixed meeting rail
Plastic tilt latch	2	Active meeting rail
Metal pivot bar	2	Bottom rail
Constant force balance	2	One per jamb, two coils per balance

Drainage:

Description	Quantity	Location
1-3/16" by 3/16" weep with flap	2	Sill, exterior face 4-1/4" from from each end (Draining sill hollows)
1-1/4" by 1/2" weep	2	Sill one at each end at the jamb/sill intersection (Draining into sill hollows)
1" by 3/16" weep	2	Sill, intermediate vertical leg (Between hollows)
1/4" by 1/8" lanced weep		Bottom rail glazing pocket, 1-1/8" from each end (Draining glazing pocket into rail hollow)
3/8" by 5/32" weep	2	Bottom rail (draining rail hollow)
1" wide notch	2	One at each end of the screen track

Reinforcement: The bottom rail, stiles and active meeting rail contained steel reinforcement (Reference Hygrade Metal Moulding drawings V0932 and SIM 0928).

Installation: The unit was installed into a 2 x 10 wood buck constructed of Spruce-Pine-Fir construction lumber. The unit was sealed and secured to the buck through the nailing fin using #6 x 1-1/4" screws spaced approximately 4-1/2" on center and sealed with silicone.

Test Results:

The results are tabulated as follows:

Paragraph	Title of Test - Test Method	Results	Allowed
2.2.1.6.1	Operating Force	18 lbs max	30 lbs max.
2.1.2	Air Infiltration (ASTM E 283-91) @ 1.57 psf (25 mph)	0.13 cfm/ft^2	0.3 cfm/ft^2 max.

Note #1: The tested specimen meets the performance levels specified in AAMA/NWWDA 101/I.S. 2-97 for air infiltration.

2.1.3	Water Resistance (ASTM E 547) (with and without screen) WTP = 2.86 psf	No leakage	No leakage
2.1.4.2	Uniform Load Structural (ASTM E 330-97) (Measurements reported were taken on the meeting rail)		
	@ 22.5 psf (positive)	0.315"	0.124" max.
	@ 22.5 psf (negative)	0.330"	0.124" max.
2.2.1.6.2	Deglazing Test (ASTM E 987-88) In operating direction at 70 lbs		
	Meeting rail	0.031"/6%	0.500"/100%
	Bottom rail	0.063"/13%	0.500"/100%
	In remaining direction at 50 lbs		
	Right stile	0.0"/0%	0.500"/100%
	Left stile	0.063"/13%	0.500"/100%
2.1.7	Welded Corner Test	Meets as stated	Meets as stated
2.1.8	Forced Entry Resistance (AAMA 1302.5-76)		
	Test A	No entry	No entry
	Test B	No entry	No entry
	Test C	No entry	No entry
	Test D	No entry	No entry
	Test E	No entry	No entry
	Test F	No entry	No entry
	Test G	No entry	No entry

WINDOWS

ATTACHMENTS

TYPE	MANUFACTURER	SERIES	SIZE	JAMB TYPE / SPACING	HEADER TYPE / SPACING	SILLS TYPE / SPACING	MULLIONS
Sgl OX Hung	Simonton	PRO FINISH	52" x 62"	#8 x 1 1/2 Galv Roof Nail 5" OC	#8 x 1 1/2 Galv Roof Nail 5" OC	#8 x 1 1/2 Galv Roof Nail 5" OC	unit sealed with silcone
Sgl Hung OX	Simonton	PRO FINISH	36" x 92"	#8 x 1 1/4 Galv Roof Nail 5" OC	#8 x 1 1/2 Galv Roof Nail 5" OC	#8 x 1 1/2 Galv Roof Nail 5" OC	unit sealed with silcone
Sgl Hung FACTORY Twin	Simonton	PRO FINISH	6'-0 - 1/2" x 6'-2"	#8 x 1 1/2 Galv Roof Nail 5" OC	#8 x 1 1/2 Galv Roof Nail 5" OC	#8 x 1 1/2 Galv Roof Nail 5" OC	FACTORY MULLED 4 - #8 x 3" screws cam gasket continuous sill & header
FIXED Picture/ Arcile Top	Simonton	PRO Finish	8'-0" x 5'-0"	#8 x 1 1/2 Galv Roof Nail 5" OC	#8 x 1 1/2 Galv Roof Nail 5" OC	#8 x 1 1/2 Galv Roof Nail 5" OC	

DOORS

ATTACHMENT OF FRAME

TYPE	MANUFACTURER	SERIES	SIZE	JAMB	HEADER	SILL

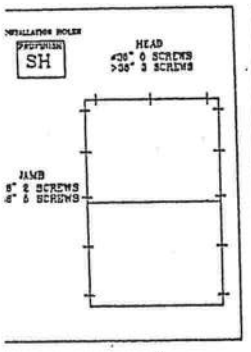
INSTALLATION HOLES
PROFINISH
SH
HEAD
<36" 0 SCREWS
>36" 3 SCREWS
JAMB
8" 2 SCREWS
6" 5 SCREWS

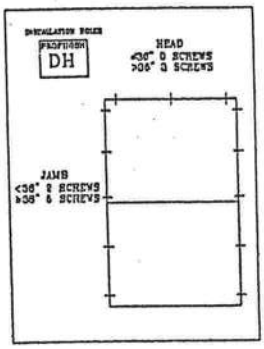
INSTALLATION HOLES
PROFINISH
DH
HEAD
<36" 0 SCREWS
>36" 3 SCREWS
JAMB
<36" 2 SCREWS
>36" 5 SCREWS

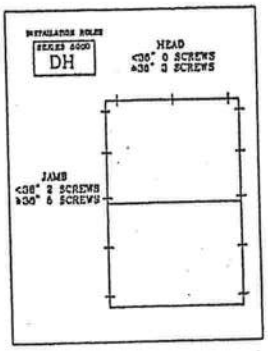
INSTALLATION HOLES
SERIES 5000
DH
HEAD
<36" 0 SCREWS
>36" 3 SCREWS
JAMB
<36" 2 SCREWS
>36" 5 SCREWS

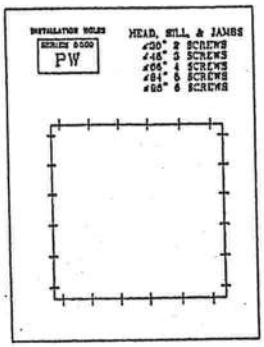
INSTALLATION HOLES
SERIES 5000
PW
HEAD, SILL, & JAMBS
<30" 2 SCREWS
<48" 3 SCREWS
<60" 4 SCREWS
<84" 5 SCREWS
<96" 6 SCREWS

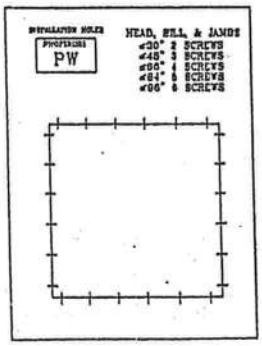
INSTALLATION HOLES
PROFINISH
PW
HEAD, SILL, & JAMBS
<30" 2 SCREWS
<48" 3 SCREWS
<60" 4 SCREWS
<84" 5 SCREWS
<96" 6 SCREWS

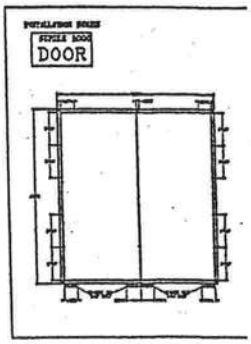
INSTALLATION HOLES
SERIES 5000
DOOR

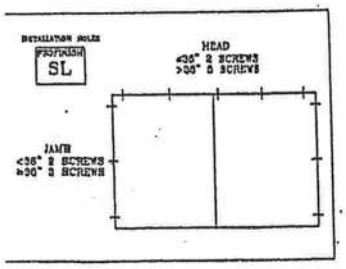
INSTALLATION HOLES
PROFINISH
SL
HEAD
<36" 2 SCREWS
>36" 5 SCREWS
JAMB
<36" 2 SCREWS
>36" 3 SCREWS

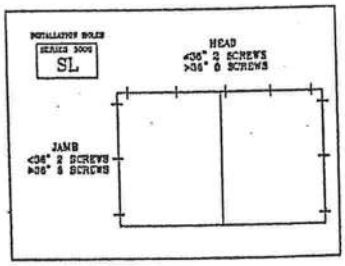
INSTALLATION HOLES
SERIES 5000
SL
HEAD
<36" 2 SCREWS
>36" 5 SCREWS
JAMB
<36" 2 SCREWS
>36" 5 SCREWS

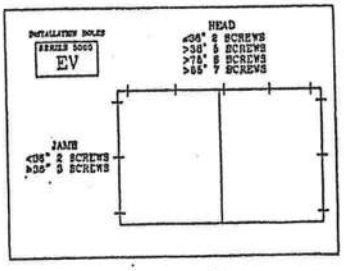
INSTALLATION HOLES
SERIES 5000
EV
HEAD
<36" 2 SCREWS
>36" 5 SCREWS
>75" 6 SCREWS
>85" 7 SCREWS
JAMB
<36" 2 SCREWS
>36" 5 SCREWS

PRODUCT 118

Proposal

Page No. of Pages

Harry's Heating & Air Conditioning, Inc.
P.O. Box 1321
LAKE CITY, FLORIDA 32056
Phone 752-2308
YEAR 'ROUND AIR CONDITIONING
HEATING CONTRACTORS 965-7931

YEAR 'ROUND AIR CONDITIONING

HEATING Contractors

PROPOSAL SUBMITTED TO: Bob MALPHURS	PHONE: 755-0247	DATE: 16 MAY 07
STREET	JOB NAME: Lee Blather	
CITY, STATE and ZIP CODE: Lake City Fl	JOB LOCATION: Columbia city	
ARCHITECT / DATE OF PLANS		JOB PHONE

We hereby submit specifications and estimates for:

13 Supply Outlets
5 Returns w/Filter Grills
3 1/2 Ton Bryant Puron Heat Pump

13 SEER 223ANA042000
FY4ANF042000 $7150 00

14.5 SEER 223ANA042000
FU4BNF005000 $7790 00

We Propose hereby to furnish material and labor — complete in accordance with above specifications, for the sum of:

_____ dollars ($ _____).

Payment to be made as follows:

All material is guaranteed to be as specified. All work to be completed in a workmanlike manner according to standard practices. Any alteration or deviation from above specifications involving extra costs will be executed only upon written orders, and will become an extra charge over and above the estimate. All agreements contingent upon strikes, accidents or delays beyond our control. Owner to carry fire, tornado and other necessary insurance. Our workers are fully covered by Workman's Compensation Insurance.

Authorized Signature: Ronnie Wyn

Note: This proposal may be withdrawn by us if not accepted within 90 days.

Acceptance of Proposal — The above prices, specifications and conditions are satisfactory and are hereby accepted. You are authorized

Signature _____

Prepared By: HARRY'S HTG + AIR INC

TOTAL HEATING AND COOLING REQUIREMENTS

Page 2

For:

Name: Lee + Angie Blatter

Address:

City:

16 MAY 07

(✓) Check Constr. Type	ITEM			AREA SQUARE FEET	DESIGN TEMPERATURE DIFFERENCE 30°	35°	40°	45°	50°	HEATING (BTUH LOSS)	DESIGN TEMP 90°	95°	COOLING (BTUH GAIN)
					HEATING MULTIPLIER (CIRCLE ONE)						COOLING MULT. (CIRCLE)		
	Gross Wall Area			1629									
	Glass Area (From page 1)			200									
	Partitions, Frame									7300			12100
	Finished 1 side, No Insulation				17	19	22	25	28		6.5	10.0	
	Finished 2 sides, No Insulation				9	11	12	14	16		4.5	6.0	
	Finished 2 sides, R-5				4	5	5.5	6	7		2.5	3.5	
	Finished 2 sides, R-11			387	2	3	3	4	4	1161	2.0	2.5	968
	Other												
	Doors (Excluding glass)												
	No weatherstripping				135	160	180	200	225		10.0	13.0	
	Weatherstripped				70	85	95	110	120		10.0	13.0	
	R-5 Insulation, No weatherstripping				123	144	164	185	205		4.3	5.5	
	R-5 Insulation, weatherstripping			40	68	79	90	101	113	3600	4.0	5.0	200
	Other												
	Net Exterior Walls												
	CBS Furred, No Insulation				9	10	12	13	14		4.5	6.0	
	CBS Furred, R-3 Insulation				5	6	7	8	8		3.0	4.2	
	CBS Furred, R-4 Insulation				4	5	6	6	7		2.7	3.8	
	CBS Furred, R-5 Insulation				4	5	5	6	6		2.5	3.5	
	Frame, No Insulation				8	9	10	11	13		5.5	7.0	
	Frame, R-11 Insulation			1429	2	2	3	3	4	4287	2.5	3.0	4287
	Frame, R-14 Insulation				1.5	1.7	2	2.5	3		2	2.8	
	Other												
	Ceiling under attic	Roof											
	No Insulation	DK	LT		18	21	24	27	30		9 / 7	10 / 8.5	
	R-11 Insulation	DK	LT		2.4	2.8	3.2	3.5	3.9		2.5 / 2	3 / 2.5	
	R-19 Insulation	DK	LT		1.5	1.7	1.9	2.2	2.4		1.5 / 1.5	2 / 1.5	
	R-22 Insulation	DK	LT		1.2	1.5	1.7	1.9	2.1		1.5 / 1.0	1.5 / 1.5	
	R-26 Insulation	DK	LT		1.1	1.3	1.4	1.6	1.8		1.3 / 1	1.5 / 1.2	
	R-30 Insulation	DK	LT	2058	1	1.1	1.3	1.4	1.6	2675	1.1 / .9	1.3 / 1.0	2675
	Other												
	Floor, Concrete Slab			Perimeter Ft.									
	No Edge Insulation												
	Other			181	35	40	40	45	45	7240	0	0	
	Subtotal									26363			20230
	People @ 300 & Appl. @ 1200												7500
	Sensible BTUH Gain												
	Duct BTUH Loss & Gain									26363			27730
	2 In. Flex. or 1 In. Rigid						.10			2636	.10		2773
	1½ In. Rigid						.075				.075		
	Total BTUH Loss									28999			
	Subtotal BTUH Gain												30403
	× 1.3 = Total BTUH Gain												39524

Calculated Heating Requirements 28999 BTUH

Size of Unit Chosen 42,000 BTUH

% Oversized

% Undersized

Calculated Cooling Requirements 39524 BTUH

Size of Unit Chosen 42,000 BTUH

% Oversized

% Undersized

RESIDENTIAL HEATING AND COOLING REQUIREMENTS*

HVAC WORKSHEET FOR WATT-WISE LIVING

HEATING AND COOLING REQUIREMENTS DUE TO GLASS AREA

WINDOWS & GLASS DOORS	AREA SQUARE FEET	DESIGN TEMPERATURE DIFFERENCE 30°	35°	40°	45°	50°	HEATING (BTUH LOSS)
		HEATING MULTIPLIER (CIRCLE ONE)					
Glass Doors, Infiltration less than 1.0 CFM/FT							
Single Glass		50	60	70	75	85	
Double Glass	20	40	45	(50)	55	60	1000
Other Sliding Glass Doors							
Single Glass		75	85	100	115	125	
Double Glass		60	70	80	90	100	
Windows, Infiltration less than 0.50 CFM/FT							
Single Glass		40	50	55	60	70	
Double Glass	160	25	30	(35)	40	45	5600
Windows, Infiltration less than 0.75 CFM/FT							
Single Glass		45	50	60	65	75	
Double Glass		30	35	40	45	50	
Other Windows							
Single Glass		75	90	105	115	130	
Double Glass		60	70	80	90	105	
Fixed or Picture Windows							
Single Glass		40	50	55	60	70	
Double Glass	20	25	30	(35)	40	45	700
Other							
Total BTUH Loss (Enter on Line 2, Page 2)							7300

WINDOWS & GLASS DOORS	AREA SQUARE FEET	COOLING MULTIPLIER (CIRCLE) SINGLE GLASS 90° C	T	R	95° C	T	R	DOUBLE GLASS 90° C	T	R	95° C	T	R	COOLING (BTUH GAIN)
No Shading														
N	30	30	22	20	30	26	25	20	14	13	(25)	17	16	750
NE & NW		60	41	36	65	45	41	50	29	24	50	32	27	
E & W	130	85	60	53	90	64	57	70	44	36	(75)	47	39	9750
SE & SW		75	51	45	80	55	50	60	37	30	65	40	33	
S	40	45	31	28	50	35	33	35	21	18	(40)	24	21	1600
Draperies or Blinds														
N		20	17	16	25	21	20	15	11	11	20	14	14	
NE & NW		35	33	30	40	37	34	30	22	21	35	25	24	
E & W		55	48	43	55	52	47	45	32	30	50	35	33	
SE & SW		45	39	35	50	43	39	40	26	25	40	29	28	
S		30	26	24	30	30	28	25	17	16	25	20	19	
Roller Shades														
N		25	19	17	25	23	22	20	12	11	20	15	14	
NE & NW		45	36	32	50	40	37	40	26	22	45	29	25	
E & W		65	53	47	70	57	51	55	37	32	60	40	35	
SE & SW		55	44	39	60	48	44	50	32	27	50	35	30	
S		35	28	25	40	32	30	30	20	16	35	23	19	
Awnings, Porches, Etc.														
All Directions		25	22	20	30	26	25	15	14	13	20	17	16	
Other														
Total BTUH Gain (Line 2, Page 2)														12100

*REFERENCE A.C.C.A. MANUAL "J"

(C - Clear T - Tinted R - Reflective)

X
Glazed Inswing Unit

COP-WL-EN4141-02

WOOD-EDGE STEEL DOORS

APPROVED DOOR STYLES:

3/4 GLASS:


404 Series


410 Series

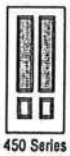
450 Series

FULL GLASS:


109 Series


114, 120, 122 Series

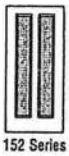
152 Series

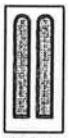
149 Series


300 Series

CERTIFIED TEST REPORTS:

NCTL 210-1897-7, 8, 9

Certifying Engineer and License Number: Barry D. Portney, P.E. / 16258.

Unit Tested in Accordance with Miami-Dade BCCO PA202.

Door panels constructed from 26-gauge 0.017" thick steel skins. Both stiles constructed from wood. Top end rails constructed of 0.032" steel. Bottom end rails constructed of 0.032" steel. Interior cavity of slab filled with rigid polyurethane foam core. Slab glazed with insulated glass mounted in a rigid plastic lip lite surround.

Frame constructed of wood with an extruded aluminum threshold.

PRODUCT COMPLIANCE LABELING:

TESTED IN
ACCORDANCE WITH
MIAMI-DADE BCCO PA202

COMPANY NAME
CITY, STATE

To the best of my knowledge and ability the above side-hinged exterior door unit conforms to the requirements of the 2001 Florida Building Code, Chapter 17 (Structural Tests and Inspections).

Kurt L Balthazor

State of Florida, Professional Engineer
Kurt Balthazor, P.E. – License Number 56533

Warnock Hersey

Test Data Review Certificate #3026447C and COP/Test Report Validation Matrix #3026447C-001 provides additional information - available from the ITS/WH website (www.etisemko.com), the Masonite website (www.masonite.com) or the Masonite technical center.

Entergy
Entry Systems

June 17, 2002
Our continuing program of product improvement makes specifications, design and product detail subject to change without notice.

PREMDOR Collection
Premium Quality Doors

Exclusively from
Masonite
Masonite International Corporation

X
Glazed Inswing Unit

COP-WL-EN4141-02

WOOD-EDGE STEEL DOORS

APPROVED ARRANGEMENT:

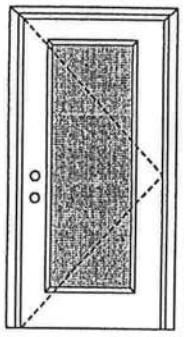

Warnock Hersey

Test Data Review Certificate #3026447C and COP/Test Report Validation Matrix #3026447C-001 provides additional information - available from the ITS/WH website (www.etlsemko.com), the Masonite website (www.masonite.com) or the Masonite technical center.

Note:
Units of other sizes are covered by this report as long as the panel used does not exceed 3'0" x 6'8".

Single Door
Maximum unit size = 3'0" x 6'8"

Design Pressure
+50.5/-50.5
Limited water unless special threshold design is used.

Large Missile Impact Resistance
Hurricane protective system (shutters) is REQUIRED.

Actual design pressure and impact resistant requirements for a specific building design and geographic location is determined by ASCE 7-national, state or local building codes specify the edition required.

MINIMUM ASSEMBLY DETAIL:

Compliance requires that minimum assembly details have been followed – see MAD-WL-MA0001-02 and MAD-WL-MA0041-02.

MINIMUM INSTALLATION DETAIL:

Compliance requires that minimum installation details have been followed – see MID-WL-MA0001-02.

APPROVED DOOR STYLES:

1/4 GLASS:


100 Series


133, 135 Series


136 Series


680 Series


822 Series

1/2 GLASS:


105 Series*

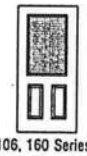
106, 160 Series*

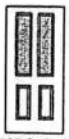
129 Series*

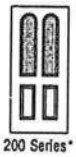
200 Series*

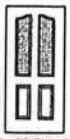
12 R/L, 23 R/L, 24 R/L Series*


107 Series*


108 Series


304 Series

*This glass kit may also be used in the following door styles: 5-panel; 5-panel with scroll; Eyebrow 5-panel; Eyebrow 5-panel with scroll.

Entergy
Entry Systems

June 17, 2002
Our continuing program of product improvement makes specifications, design and product detail subject to change without notice.

PREMDOR Collection Premium Quality Doors
Exclusively from Masonite
Masonite International Corporation

DOUBLE DOOR

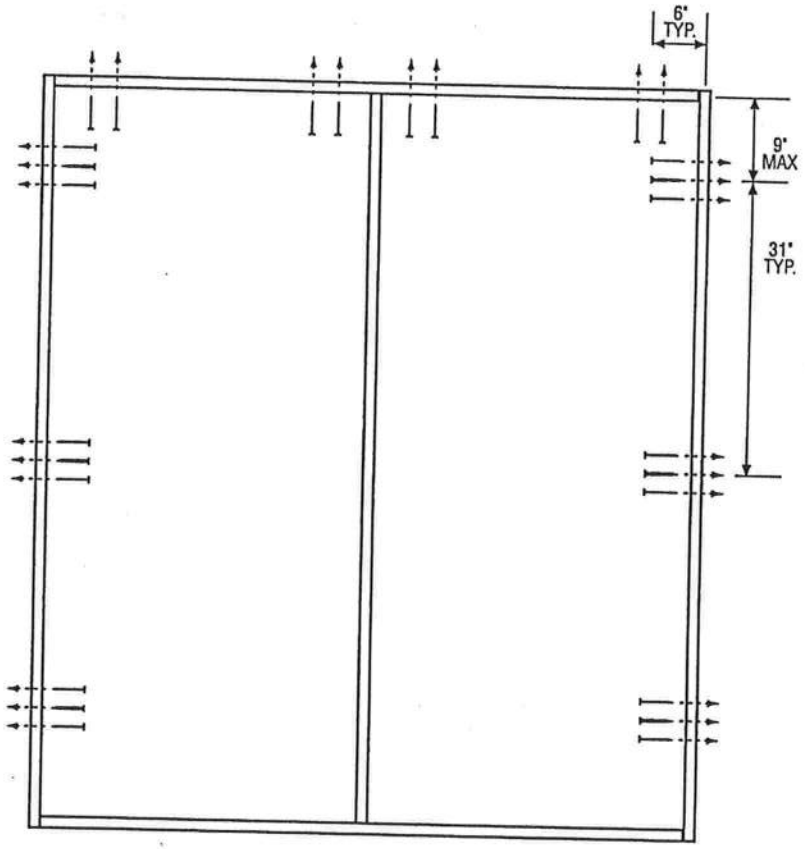

Minimum Fastener Count

- 6 per vertical framing member for 7'0" heights and smaller
- 8 per vertical framing member for heights greater than 7'0"
- 8 per horizontal framing member

Hinge and strike plates require two 2-1/2" long screws per location.

Rough Opening (RO)

- Width of door unit plus 1/2"
- Height of door unit plus 1/4"

Warnock Hersey

Test Data Review Certificate #3026447A; #3026447B; #3026447C and COP/Test Report Validation Matrix #3026447A-001, 002, 003, 004; #3026447B-001, 002, 003, 004; #3026447C-001, 002, 003, 004 provides additional information - available from the ITS/WH website (www.etlsemko.com), the Masonite website (www.masonite.com) or the Masonite technical center.

Latching Hardware:

- Compliance requires that GRADE 3 or better (ANSI/BHMA A156.2) cylindrical and deadlock hardware be installed.
- **UNITS COVERED BY COP DOCUMENT 0247*, 0267*, 3242*, 3247, 3262* or 3267**
  Compliance requires that 8" GRADE 1 (ANSI/BHMA A156.16) surface bolts be installed on latch side of active door panel – (1) at top and (1) at bottom.

*Based on required Design Pressure – see COP sheet for details.

Notes:

1. Anchor calculations have been carried out with the fastener rating from the different fasteners being considered for use. Jamb and head fasteners analyzed for this unit include #8 wood screws and 10d common nails. Threshold fasteners analyzed for this unit include Liquid Nails Builders Choice 490 (or equal structural adhesive).
2. The wood screw and common nail single shear design values come from ANSI/AF & PA NDS for southern pine lumber with a side member thickness of 1-1/4" and achievement of minimum embedment of 1-1/4".
3. Wood bucks by others, must be anchored properly to transfer loads to the structure.

March 10, 2003

Masonite®

WOOD-EDGE STEEL DOORS

APPROVED DOOR STYLES:

3/4 GLASS:

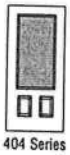
404 Series

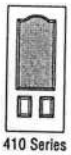
410 Series

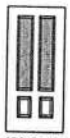
450 Series

FULL GLASS:


109 Series

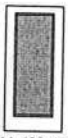
114, 120, 122 Series

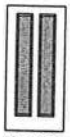
152 Series

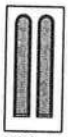
149 Series


300 Series

CERTIFIED TEST REPORTS:

NCTL 210-1897-7, 8, 9

Certifying Engineer and License Number: Barry D. Portney, P.E. / 16258.

Unit Tested in Accordance with Miami-Dade BCCO PA202.

Door panels constructed from 26-gauge 0.017" thick steel skins. Both stiles constructed from wood. Top end rails constructed of 0.032" steel. Bottom end rails constructed of 0.032" steel. Interior cavity of slab filled with rigid polyurethane foam core. Slab glazed with insulated glass mounted in a rigid plastic lip lite surround.

Frame constructed of wood with an extruded aluminum threshold.

PRODUCT COMPLIANCE LABELING:

TESTED IN
ACCORDANCE WITH
MIAMI-DADE BCCO PA202

COMPANY NAME
CITY, STATE

To the best of my knowledge and ability the above side-hinged exterior door unit conforms to the requirements of the 2001 Florida Building Code, Chapter 17 (Structural Tests and Inspections).

Kurt L Balthazor

State of Florida, Professional Engineer
Kurt Balthazor, P.E. – License Number 56533

Warnock Hersey

Test Data Review Certificate #3026447C and COP/Test Report Validation Matrix #3026447C-001 provides additional information - available from the ITS/WH website (www.etlsemko.com), the Masonite website (www.masonite.com) or the Masonite technical center.

Entergy
Entry Systems

June 17, 2002
Our continuing program of product improvement makes specifications, design and product detail subject to change without notice.

PREMDOR Collection
Premium Quality Doors

Exclusively from
Masonite
Masonite International Corporation

X
Glazed Inswing Unit

COP-WL-EN4141-02

WOOD-EDGE STEEL DOORS

APPROVED DOOR STYLES:

3/4 GLASS:


404 Series


410 Series


450 Series

FULL GLASS:

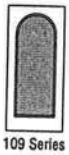
109 Series

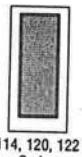
114, 120, 122 Series

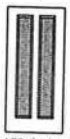
152 Series

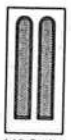
149 Series


300 Series

CERTIFIED TEST REPORTS:

NCTL 210-1897-7, 8, 9

Certifying Engineer and License Number: Barry D. Portney, P.E. / 16258.

Unit Tested in Accordance with Miami-Dade PCCO PA202

XX
Glazed Outswing Unit

COP-WL-EN4162-02

WOOD-EDGE STEEL DOORS

APPROVED ARRANGEMENT:

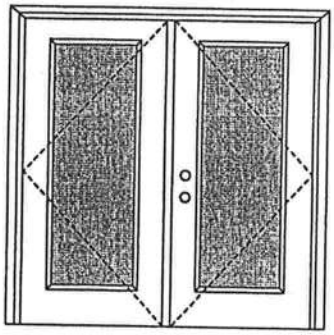

Warnock Hersey

Test Data Review Certificate #3026447C and COP/Test Report Validation Matrix #3026447C-001 provides additional information - available from the ITS/WH website (www.etlsemko.com), the Masonite website (www.masonite.com) or the Masonite technical center.

Note:
Units of other sizes are covered by this report as long as the panels used do not exceed 3'0" x 6'8".

Double Door
Maximum unit size = 6'0" x 6'8"

Design Pressure

+50.5/-50.5

Limited water unless special threshold design is used.

Large Missile Impact Resistance

Hurricane protective system (shutters) is REQUIRED.

Actual design pressure and impact resistant requirements for a specific building design and geographic location is determined by ASCE 7-national, state or local building codes specify the edition required.

MINIMUM ASSEMBLY DETAIL:

Compliance requires that minimum assembly details have been followed – see MAD-WL-MA0012-02 and MAD-WL-MA0041-02.

MINIMUM INSTALLATION DETAIL:

Compliance requires that minimum installation details have been followed – see MID-WL-MA0002-02.

APPROVED DOOR STYLES:

X
Unit

MID-WL-MA0001-02

SINGLE DOOR

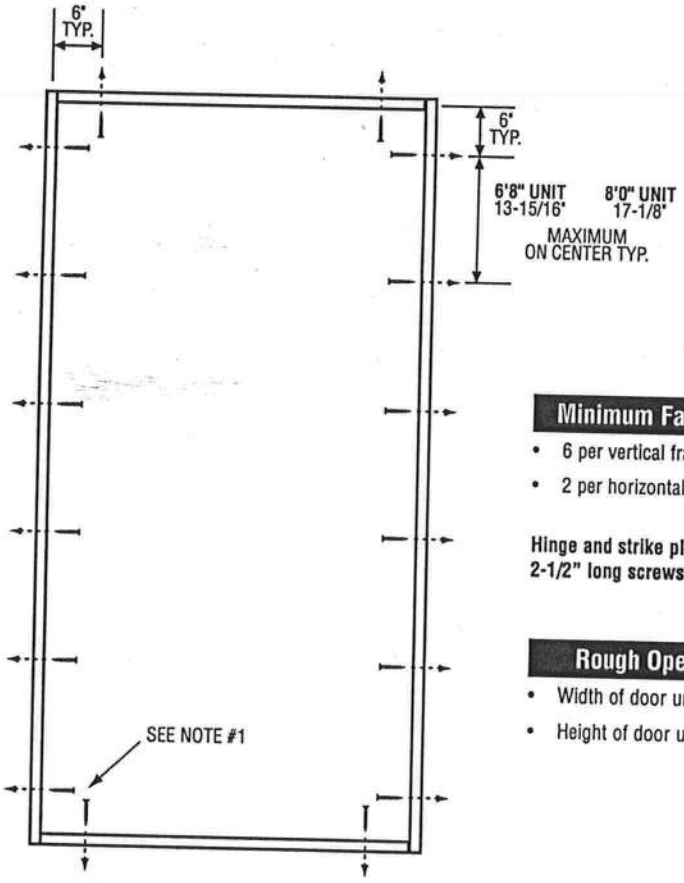

Minimum Fastener Count

- 6 per vertical framing member
- 2 per horizontal framing member

Hinge and strike plates require two 2-1/2" long screws per location.

Rough Opening (RO)

- Width of door unit plus 1/2"
- Height of door unit plus 1/4"

Warnock Hersey

Test Data Review Certificate #3026447A; #3026447B; #3026447C and COP/Test Report Validation Matrix #3026447A-001, 002, 003, 004; #3026447B-001, 002, 003, 004; #3026447C-001, 002, 003, 004 provides additional information - available from the ITS/WH website (www.etlsemko.com), the Masonite website (www.masonite.com) or the Masonite technical center.

Latching Hardware:

- Compliance requires that GRADE 3 or better (ANSI/BHMA A156.2) cylindrical and deadlock hardware be installed.
- **UNITS COVERED BY COP DOCUMENT 0246*, 0266*, 3241*, 3246, 3261* or 3266**
  Compliance requires that 8" GRADE 1 (ANSI/BHMA A156.16) surface bolts be installed on latch side of active door panel – (1) at top and (1) at bottom.

*Based on required Design Pressure – see COP sheet for details.

Notes:

1. Anchor calculations have been carried out with the lowest (least) fastener rating from the different fasteners being considered for use. Jamb and head fasteners analyzed for this unit include #8 and #10 wood screws or 3/16" Tapcons. Threshold fasteners analyzed for this unit include #8 and #10 wood screws, 3/16" Tapcons, or Liquid Nails Builders Choice 490 (or equal structural adhesive).
2. The wood screw single shear design values come from Table 11.3A of ANSI/AF & PA NDS for southern pine lumber with a side member thickness of 1-1/4" and achievement of minimum embedment. The 3/16" Tapcon single shear design values come from the ITW and ELCO Dade Country approvals respectively, each with minimum 1-1/4" embedment.
3. Wood bucks by others, must be anchored properly to transfer loads to the structure.

March 10, 2003

Masonite®

XX
Unit

MID-WL-MA0002-02

DOUBLE DOOR

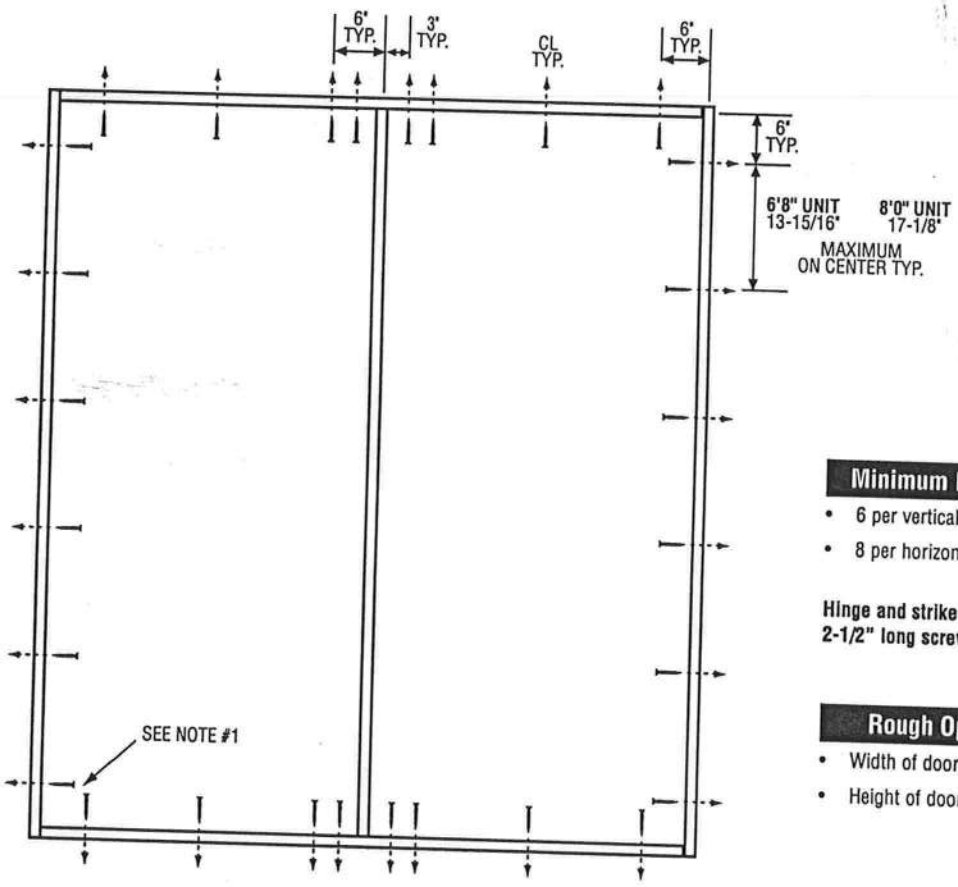

Minimum Fastener Count

- 6 per vertical framing member
- 8 per horizontal framing member

Hinge and strike plates require two 2-1/2" long screws per location.

Rough Opening (RO)

- Width of door unit plus 1/2"
- Height of door unit plus 1/4"

Warnock Hersey

Test Data Review Certificate #3026447A; #3026447B; #3026447C and COP/Test Report Validation Matrix #3026447A-001, 002, 003, 004; #3026447B-001, 002, 003, 004; #3026447C-001, 002, 003, 004 provides additional information - available from the ITS/WH website (www.etlsemko.com), the Masonite website (www.masonite.com) or the Masonite technical center.

Latching Hardware:

- Compliance requires that GRADE 3 or better (ANSI/BHMA A156.2) cylindrical and deadlock hardware be installed.
- **UNITS COVERED BY COP DOCUMENT 0247*, 0267*, 3242*, 3247, 3262* or 3267**
  Compliance requires that 8" GRADE 1 (ANSI/BHMA A156.16) surface bolts be installed on latch side of active door panel – (1) at top and (1) at bottom.

*Based on required Design Pressure – see COP sheet for details.

Notes:

1. Anchor calculations have been carried out with the lowest (least) fastener rating from the different fasteners being considered for use. Jamb and head fasteners analyzed for this unit include #8 and #10 wood screws or 3/16" Tapcons. Threshold fasteners analyzed for this unit include #8 and #10 wood screws, 3/16" Tapcons, or Liquid Nails Builders Choice 490 (or equal structural adhesive).
2. The wood screw single shear design values come from Table 11.3A of ANSI/AF & PA NDS for southern pine lumber with a side member thickness of 1-1/4" and achievement of minimum embedment. The 3/16" Tapcon single shear design values come from the ITW and ELCO Dade Country approvals respectively, each with minimum 1-1/4" embedment.
3. Wood bucks by others, must be anchored properly to transfer loads to the structure.

March 10, 2003

Masonite®

XX
Unit

MAD-WL-MA0012-02

OUTSWING UNITS WITH DOUBLE DOOR

TYPICAL HINGE ATTACHMENT

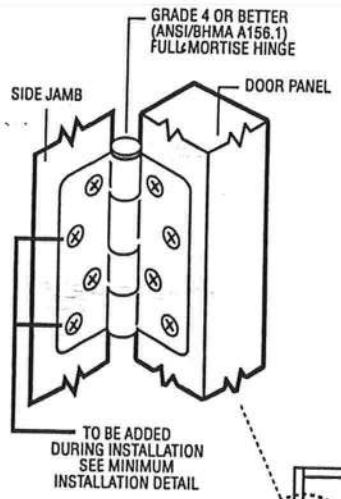

TYPICAL ASTRAGAL PROFILES

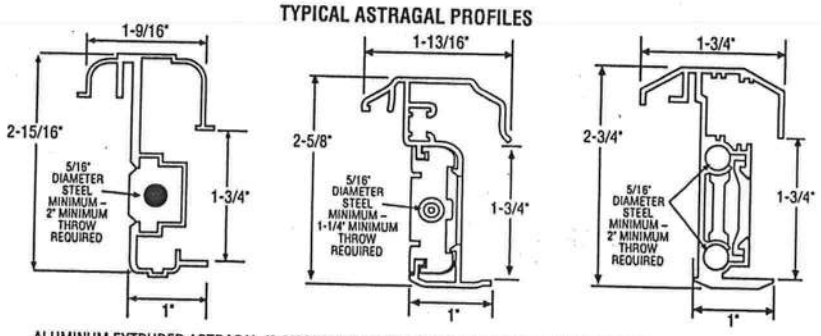

ALUMINUM EXTRUDED ASTRAGAL (0.06" MINIMUM WALL THICKNESS) WITH ADDED REINFORCEMENT INSERTS AT TOP EXTENSION BOLT, BOTTOM EXTENSION BOLT AND CYLINDERICAL/DEADBOLT LATCHING LOCATIONS. ATTACH WITH #8 X 1" PAN HEAD SCREWS – LOCATE 1" FROM EACH END MINIMUM AND 22" O.C. MAXIMUM.

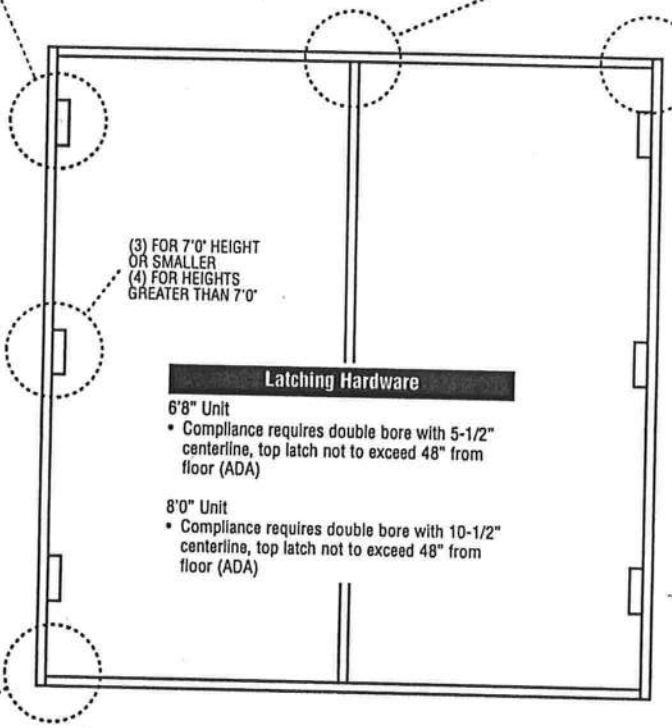

Latching Hardware

6'8" Unit
- Compliance requires double bore with 5-1/2" centerline, top latch not to exceed 48" from floor (ADA)

8'0" Unit
- Compliance requires double bore with 10-1/2" centerline, top latch not to exceed 48" from floor (ADA)

TYPICAL HEADER & SIDE JAMB ATTACHMENT

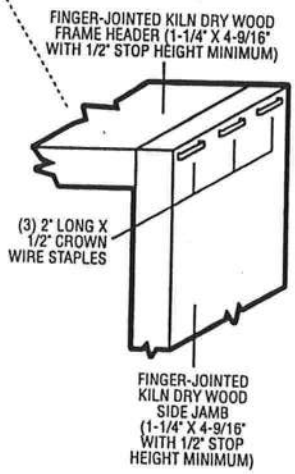

TYPICAL THRESHOLD & SIDE JAMB ATTACHMENT

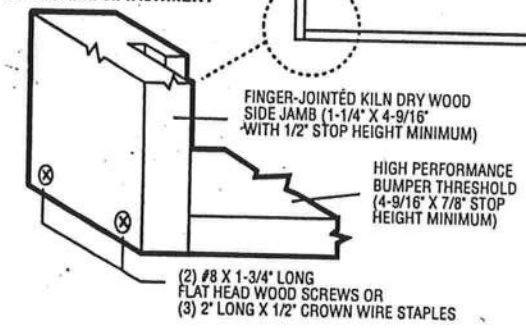

Warnock Hersey

Test Data Review Certificate #3026447A; #3026447B; #3026447C and COP/Test Report Validation Matrix #3026447A-001, 002, 003, 004; #3026447B-001, 002, 003, 004; #3026447C-001, 002, 003, 004 provides additional information - available from the ITS/WH website (www.etlsemko.com), the Masonite website (www.masonite.com) or the Masonite technical center.

October 14, 2002

Masonite®

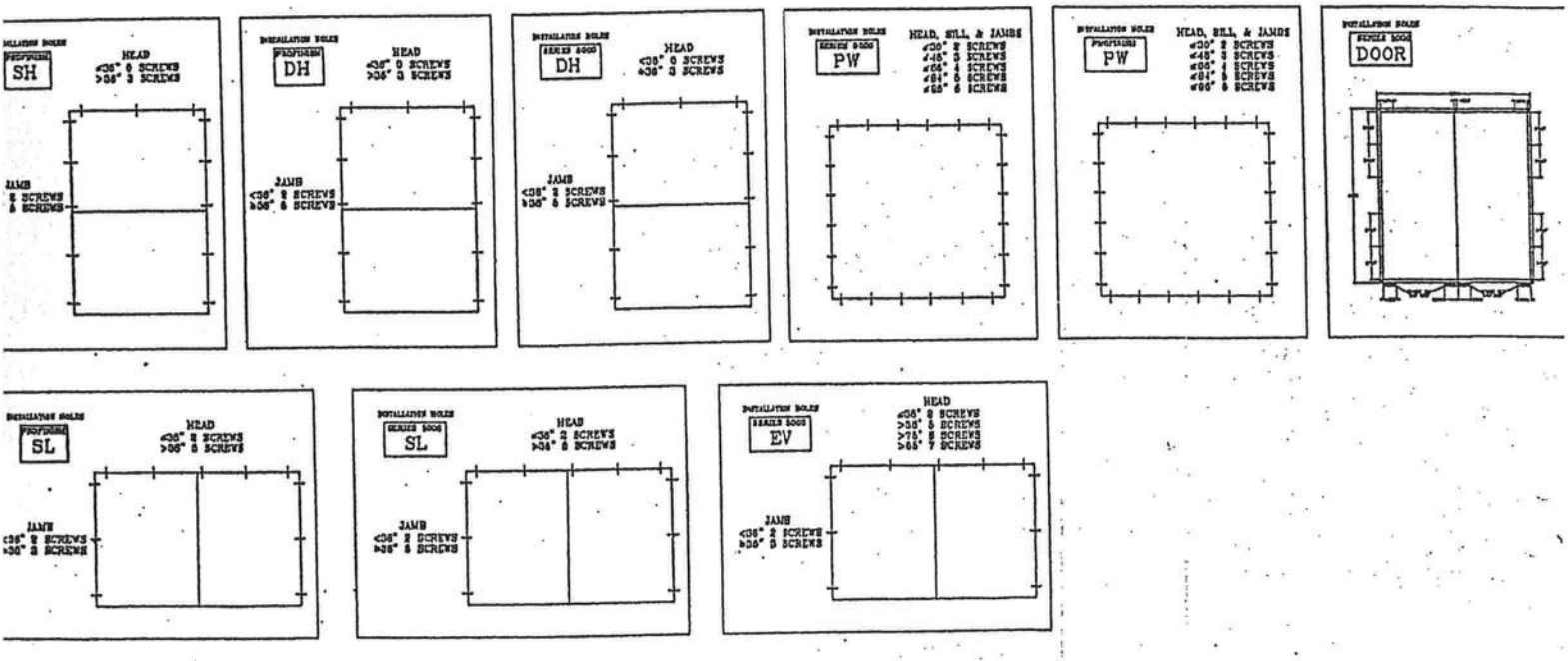
SH
HEAD
<36" 0 SCREWS
>36" 3 SCREWS
JAMB
DH
HEAD
<36" 0 SCREWS
>36" 3 SCREWS
JAMB
<36" 2 SCREWS
>36" 6 SCREWS
DH
HEAD
<36" 0 SCREWS
>36" 3 SCREWS
JAMB
<36" 2 SCREWS
>36" 6 SCREWS
PW
HEAD, SILL, & JAMBS
<20" 2 SCREWS
<48" 3 SCREWS
<66" 4 SCREWS
<84" 5 SCREWS
<96" 6 SCREWS
PW
HEAD, SILL, & JAMBS
<20" 2 SCREWS
<48" 3 SCREWS
<66" 4 SCREWS
<84" 5 SCREWS
<96" 6 SCREWS
DOOR
SL
HEAD
<36" 2 SCREWS
>36" 6 SCREWS
JAMB
<36" 2 SCREWS
>36" 3 SCREWS
SL
HEAD
<36" 2 SCREWS
>36" 6 SCREWS
JAMB
<36" 2 SCREWS
>36" 6 SCREWS
EV
HEAD
<36" 2 SCREWS
>36" 5 SCREWS
>75" 6 SCREWS
>85" 7 SCREWS
JAMB
<36" 2 SCREWS
>36" 3 SCREWS

PRODUCT APPROVAL SPECIFICATION SHEET

As required by Florida Statute 553.842 and Florida Administrative Code 9B-72, please provide the information and approval numbers on the building components listed below if they will be utilized on the construction project for which you are applying for a building permit. We recommend you contact your local product supplier should you not know the product approval number for any of the applicable listed products. Statewide approved products are listed online @ www.floridabuilding.org

Category/Subcategory	Manufacturer	Product Description	Approval Number(s)
1. EXTERIOR DOORS	~~Masonite~~		FL 18
A. SWINGING	Masonite	Steel Swing Doors	
B. SLIDING		NA	
C. SECTIONAL/ROLL UP	Reliabilt	insulated steel	
D. OTHER		NA	
2. WINDOWS			FL 663
A. SINGLE/DOUBLE HUNG	Simonton	Vinyl Single Hung	
B. HORIZONTAL SLIDER	"	vinyl	
C. CASEMENT			
D. FIXED			
E. MULLION			
F. SKYLIGHTS			
G. OTHER			
3. PANEL WALL			
A. SIDING			
B. SOFFITS	Georgia Pacific	white Vinyl	FL 1146
C. STOREFRONTS			
D. GLASS BLOCK			
E. OTHER			
			FL 673
4. ROOFING PRODUCTS			
A. ASPHALT SHINGLES	Oakridge Pro 30	Fiberglass asphalt	
B. NON-STRUCT METAL			
C. ROOFING TILES			
D. SINGLE PLY ROOF			
E. OTHER			
5. STRUCT COMPONENTS			
A. WOOD CONNECTORS			
B. WOOD ANCHORS			
C. TRUSS PLATES			
D. INSULATION FORMS			
E. LINTELS			
F. OTHERS			
6. NEW EXTERIOR ENVELOPE PRODUCTS		Stucco	NA
A.			

The products listed below did not demonstrate product approval at plan review. I understand that at the time of inspection of these products, the following information must be available to the inspector on the jobsite; 1) copy of the product approval, 2) performance characteristics which the product was tested and certified to comply with, 3) copy of the applicable manufacturers installation requirements. Further, I understand these products may have to be removed if approval cannot be demonstrated during inspection.

Chris [illegible]
APPLICANT SIGNATURE

5/18/07
DATE

R-1305 01-04

GTC DESIGN GROUP

STRUCTURAL AND WIND LOAD CALCULATIONS

Lee and Angie Blatter Residence

I certify that the following structure meets all the requirements of Chapter 16 of the Florida Building Code 2004, with 2005 revisions.

5/11/07

Gary Gill, P.E. 51942
P.O. Box 187
130 West Howard Street
Live Oak, FL 32064
Ph. (386) 362-3678
Fax (386) 362-6133
AUTH # 9461

Engineering Calculation Index

Project name: Blatter
Project: 0
Client
Calculations: Gary Gill, PE
Date: 1/23/2007

Design Basis

Design Loads

Wind Load	120	
Floor Live Load		
	Sleep Areas =	30 psf
	All Others =	40 psf
Floor Dead Load		10 psf
Wall Dead Load		10 psf
Roof Live Load		20 psf
Roof Dead Load		10 psf

Load Combinations

DL + LL(floor) + LL (roof)
DL + LL(floor) +WL
DL + WL
Wind load

Exposure B

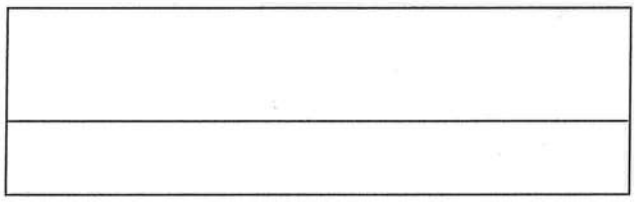

Building Information

Shape	Rectangle
Length	64 ft
Width	48 ft
Type	Single Story

References

2004 Florida Building Code
ASCE 7-02 Minimum Design Loads for Buildings and Other Structures
AITC Timber Construction Manual

Calculation Summary

Item	Description	Loads		Fasterners Required
Roof	Ridge Beams			
	S-1	Maximum uplight =	3095 lb	10-#10 screws (370#/screw cap.)
	Rafters			
	R-1	Maximum uplift =	1171 lb	4-#10 screws (370# / screw shear)
	Beams			9-#10 screws (137# / screw -pullout)
	B-1	Maximim Uplift =	1344 lb	4-#10 screws (370# / scerew cap.)
				9-#10 screws (137# / screw -pullout)
Walls				
	Shear Walls			
	SW-1	Max. shear load =	103.1 lb/ft	#12 screws @ 6" 0.C. edges
	SW-2	Max. shear load =	128.4	#12 screws @ 6" 0.C. edges
	SW-3	Max. shear load =	46.1	#12 screws @ 6" 0.C. edges
	SW-4	Max. shear load =	48.5	#12 screws @ 6" 0.C. edges
	SW-1	Max.Holdown req'd =	825	Simpson LLT20
	SW-2	Max.Holdown req'd =	1027	Simpson LLT20
	SW-3	Max.Holdown req'd =	369	Simpson LLT20
	SW-4	Max.Holdown req'd =	388	Simpson LLT20

WIND02 v2-21

Detailed Wind Load Design (Method 2) per ASCE 7-02

Analysis by: Gary Gill **Company Name:** GTC Design Group
Description: Blatter

User Input Data		
Structure Type	Building	
Basic Wind Speed (V)	120	mph
Struc Category (I, II, III, or IV)	II	
Exposure (B, C, or D)	B	
Struc Nat Frequency (n1)	1	Hz
Slope of Roof	6.0	:12
Slope of Roof (Theta)	26.6	Deg
Type of Roof	Gabled	
Kd (Directonality Factor)	0.85	
Eave Height (Eht)	8.00	ft
Ridge Height (RHt)	18.00	ft
Mean Roof Height (Ht)	13.00	ft
Width Perp. To Wind Dir (B)	64.00	ft
Width Paral. To Wind Dir (L)	48.00	ft

Calculated Parameters		
Importance Factor	1	
Hurricane Prone Region (V>100 mph)		
Table 6-2 Values		
Alpha =	7.000	
zg =	1200.000	
At =	0.143	
Bt =	0.840	
Bm =	0.450	
Cc =	0.300	
l =	320.00	ft
Epsilon =	0.333	
Zmin =	30.00	ft

Calculated Parameters	
Type of Structure	
Height/Least Horizontal Dim	0.27
Flexible Structure	No

Gust Factor Category I: Rigid Structures - Simplified Method			
Gust1	For rigid structures (Nat Freq > 1 Hz) use 0.85	0.85	
Gust Factor Category II: Rigid Structures - Complete Analysis			
Zm	Zmin	30.00	ft
Izm	Cc * (33/z)^0.167	0.3048	
Lzm	l*(zm/33)^Epsilon	309.99	ft
Q	(1/(1+0.63*((B+Ht)/Lzm)^0.63))^0.5	0.8902	
Gust2	0.925*((1+1.7*Izm*3.4*Q)/(1+1.7*3.4*Izm))	0.8602	
Gust Factor Summary			
G	Since this is not a flexible structure the lessor of Gust1 or Gust2 are used	0.85	

Fig 6-5 Internal Pressure Coefficients for Buildings, Gcpi

Condition	Gcpi	
	Max +	Max -
Open Buildings	0.00	0.00
Partially Enclosed Buildings	0.55	-0.55
Enclosed Buildings	0.18	-0.18
Enclosed Buildings	**0.18**	**-0.18**

WIND02 v2-21

Detailed Wind Load Design (Method 2) per ASCE 7-02

6.5.12.2.1 Design Wind Pressure - Buildings of All Heights

Elev	Kz	Kzt	qz	Pressure (lb/ft^2)						
				Windward Wall*		Leeward Wall		Total	Shear	Moment
ft			lb/ft^2	+GCpi	-GCpi	+GCpi	-GCpi	+/-Gcpi	(Kip)	(Kip-ft)
18	0.61	1.00	18.97	9.66	16.14	-10.90	-4.41	20.55	3.95	5.92
15	0.57	1.00	18.01	9.00	15.49	-10.90	-4.41	19.90	23.05	214.31

Note: 1) Positive forces act toward the face and Negative forces act away from the face.

Figure 6-6 - External Pressure Coefficients, Cp

Loads on Main Wind-Force Resisting Systems (Method 2)

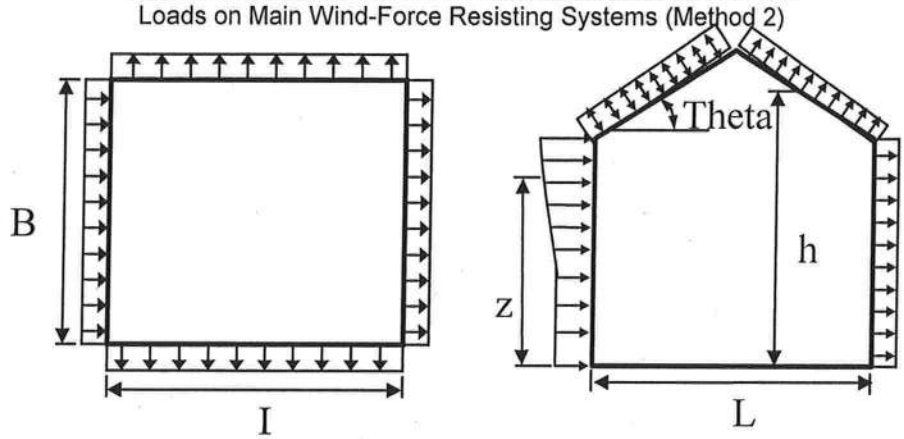

Variable	Formula	Value	Units
Kh	2.01*(15/zg)^(2/Alpha)	0.57	
Kht	Topographic factor (Fig 6-4)	1.00	
Qh	.00256*(V)^2*I*Kh*Kht*Kd	18.01	psf
Khcc	Comp & Clad: Table 6-3 Case 1	0.70	
Qhcc	.00256*V^2*I*Khcc*Kht*Kd	21.95	psf

Wall Pressure Coefficients, Cp	
Surface	Cp
Windward Wall (See Figure 6.5.12.2.1 for Pressures)	0.8

Roof Pressure Coefficients, Cp	
Roof Area (sq. ft.)	-
Reduction Factor	1.00

Calculations for Wind Normal to 64 ft Face *Additional Runs may be req'd for other wind directions*	Cp	Pressure (psf) +GCpi	 -GCpi
Leeward Walls (Wind Dir Normal to 64 ft wall)	-0.50	-10.90	-4.41
Leeward Walls (Wind Dir Normal to 48 ft wall)	-0.43	-9.87	-3.39
Side Walls	-0.70	-13.96	-7.47
Roof - Wind Normal to Ridge (Theta>=10) - for Wind Normal to 64 ft face			
Windward - Min Cp	-0.21	-6.39	0.09
Windward - Max Cp	0.29	1.22	7.71
Leeward Normal to Ridge	-0.60	-12.43	-5.94
Overhang Top (Windward)	-0.21	-3.15	-3.15
Overhang Top (Leeward)	-0.60	-9.18	-9.18

WIND02 v2-21

Detailed Wind Load Design (Method 2) per ASCE 7-02

Overhang Bottom (Applicable on Windward only)	0.80	12.25	12.25
Roof - Wind Parallel to Ridge (All Theta) - for Wind Normal to 48 ft face			
Dist from Windward Edge: 0 ft to 26 ft - Max Cp	-0.18	-6.00	0.49
Dist from Windward Edge: 0 ft to 6.5 ft - Min Cp	-0.90	-17.02	-10.53
Dist from Windward Edge: 6.5 ft to 13 ft - Min Cp	-0.90	-17.02	-10.53
Dist from Windward Edge: 13 ft to 26 ft - Min Cp	-0.50	-10.90	-4.41
Dist from Windward Edge: > 26 ft	-0.30	-7.83	-1.35

* Horizontal distance from windward edge

Figure 6-10 - External Pressure Coefficients, GCpf

Loads on Main Wind-Force Resisting Systems w/ Ht <= 60 ft

Kh =	2.01*(15/zg)^(2/Alpha)	=	0.70
Kht =	Topographic factor (Fig 6-2)	=	1.00
Qh =	0.00256*(V)^2*ImpFac*Kh*Kht*Kd	=	21.95
Theta =	Angle of Roof	=	26.6 Deg

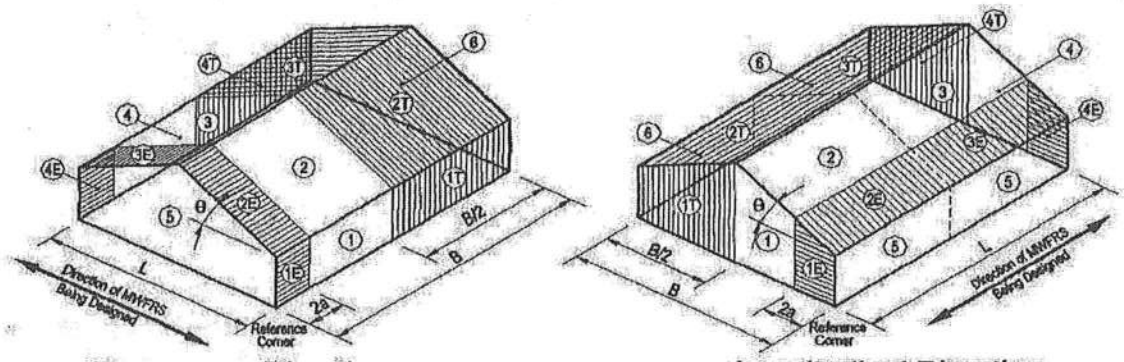

Transverse Direction

Longitudinal Direction

Torsional Load Cases

Wind Pressures on Main Wind Force Resisting System						
Surface	GCpf	+GCpi	-GCpi	qh (psf)	Min P (psf)	Max P (psf)
1	0.55	0.18	-0.18	21.95	8.12	16.02
2	-0.10	0.18	-0.18	21.95	-6.06	1.84
3	-0.45	0.18	-0.18	21.95	-13.76	-5.86
4	-0.39	0.18	-0.18	21.95	-12.52	-4.62
5	-0.45	0.18	-0.18	21.95	-13.83	-5.93
6	-0.45	0.18	-0.18	21.95	-13.83	-5.93
1E	0.73	0.18	-0.18	21.95	12.02	19.92
2E	-0.19	0.18	-0.18	21.95	-8.03	-0.12
3E	-0.58	0.18	-0.18	21.95	-16.78	-8.88
4E	-0.53	0.18	-0.18	21.95	-15.68	-7.78

* p = qh * (GCpf - GCpi)

WIND02 v2-21

Detailed Wind Load Design (Method 2) per ASCE 7-02

Figure 6-11 - External Pressure Coefficients, GCp

Loads on Components and Cladding for Buildings w/ Ht <= 60 ft

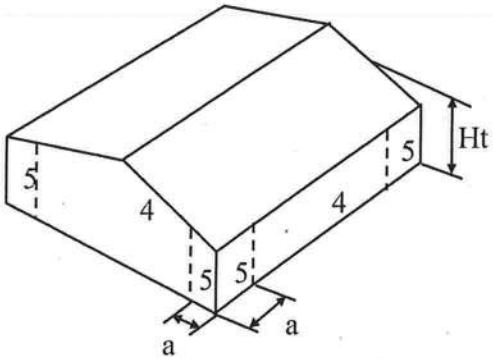

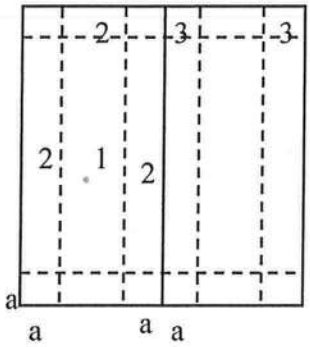

Gabled Roof

7 < Theta <= 45

a = 4.8 ==> 4.80 ft

Double Click on any data entry line to receive a help Screen

Component	Width (ft)	Span (ft)	Area (ft^2)	Zone	GCp Max	GCp Min	Wind Press (lb/ft^2 Max	Wind Press (lb/ft^2 Min
Wall	10	1	10.00	4	1.00	-1.10	25.90	-28.10
Wall Exterior	10	1	10.00	5	1.00	-1.40	25.90	-34.69
Roof	10	1	10.00	1	0.50	-0.90	14.93	-23.71
Roof Exterior	10	1	10.00	2	0.50	-1.70	14.93	-41.27
			0.00					
			0.00					
			0.00					
			0.00					
			0.00					
			0.00					

Note: * Enter Zone 1 through 5, or 1H through 3H for overhangs.

WIND02 v2-21

Detailed Wind Load Design (Method 2) per ASCE 7-02

Analysis by: Gary Gill **Company Name:** GTC Design Group
Description: Blatter Residence - Porch

User Input Data		
Structure Type	Building	
Basic Wind Speed (V)	120	mph
Struc Category (I, II, III, or IV)	II	
Exposure (B, C, or D)	B	
Struc Nat Frequency (n1)	1	Hz
Slope of Roof	4.0	:12
Slope of Roof (Theta)	18.4	Deg
Type of Roof	Gabled	
Kd (Directonality Factor)	0.85	
Eave Height (Eht)	8.00	ft
Ridge Height (RHt)	10.00	ft
Mean Roof Height (Ht)	9.00	ft
Width Perp. To Wind Dir (B)	52.00	ft
Width Paral. To Wind Dir (L)	8.00	ft

Calculated Parameters		
Importance Factor	1	
Hurricane Prone Region (V>100 mph)		
Table 6-2 Values		
Alpha =	7.000	
zg =	1200.000	
At =	0.143	
Bt =	0.840	
Bm =	0.450	
Cc =	0.300	
l =	320.00	ft
Epsilon =	0.333	
Zmin =	30.00	ft

Calculated Parameters	
Type of Structure	
Height/Least Horizontal Dim	1.13
Flexible Structure	No

Gust Factor Category I: Rigid Structures - Simplified Method			
Gust1	For rigid structures (Nat Freq > 1 Hz) use 0.85	0.85	
Gust Factor Category II: Rigid Structures - Complete Analysis			
Zm	Zmin	30.00	ft
Izm	Cc * (33/z)^0.167	0.3048	
Lzm	l*(zm/33)^Epsilon	309.99	ft
Q	(1/(1+0.63*((B+Ht)/Lzm)^0.63))^0.5	0.9031	
Gust2	0.925*((1+1.7*Izm*3.4*Q)/(1+1.7*3.4*Izm))	0.8678	
Gust Factor Summary			
G	Since this is not a flexible structure the lessor of Gust1 or Gust2 are used	0.85	

Fig 6-5 Internal Pressure Coefficients for Buildings, Gcpi

Condition	Gcpi	
	Max +	Max -
Open Buildings	0.00	0.00
Partially Enclosed Buildings	0.55	-0.55
Enclosed Buildings	0.18	-0.18
Partially Enclosed Buildings	**0.55**	**-0.55**

Aog =	Tot Area of Openings in Bldg Envelope	-	ft^2
Vi =	Unpartitioned internal volue	-	ft^3
Ri =	0.5*((1+1/(1+(Vi/(22800*Aog))^0.5))	0.0	

WIND02 v2-21

Detailed Wind Load Design (Method 2) per ASCE 7-02

6.5.12.2.1 Design Wind Pressure - Buildings of All Heights

Elev	Kz	Kzt	qz	Pressure (lb/ft^2)						
				Windward Wall*		Leeward Wall		Total	Shear	Moment
ft			lb/ft^2	+GCpi	-GCpi	+GCpi	-GCpi	+/-Gcpi	(Kip)	(Kip-ft)
15	0.57	1.00	18.01	2.34	22.15	-17.56	2.25	19.90	15.52	116.41

Note: 1) Positive forces act toward the face and Negative forces act away from the face.

Figure 6-6 - External Pressure Coefficients, Cp

Loads on Main Wind-Force Resisting Systems (Method 2)

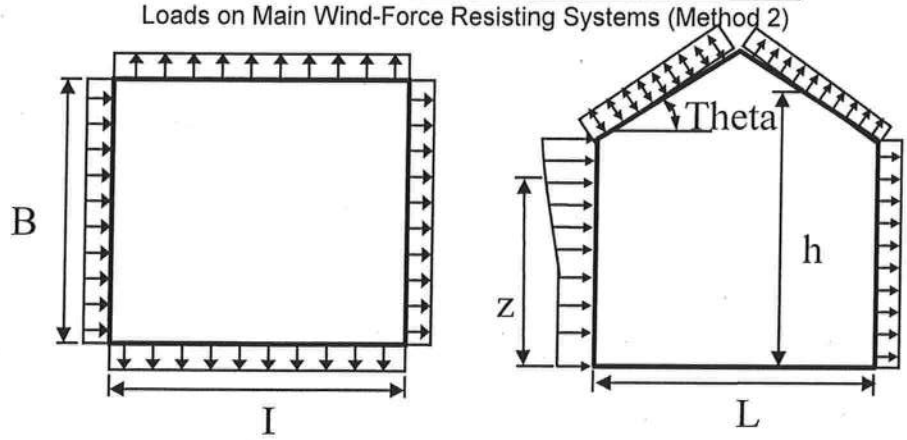

Variable	Formula	Value	Units
Kh	2.01*(15/zg)^(2/Alpha)	0.57	
Kht	Topographic factor (Fig 6-4)	1.00	
Qh	.00256*(V)^2*I*Kh*Kht*Kd	18.01	psf
Khcc	Comp & Clad: Table 6-3 Case 1	0.70	
Qhcc	.00256*V^2*I*Khcc*Kht*Kd	21.95	psf

Wall Pressure Coefficients, Cp	
Surface	Cp
Windward Wall (See Figure 6.5.12.2.1 for Pressures)	0.8

Roof Pressure Coefficients, Cp	
Roof Area (sq. ft.)	-
Reduction Factor	1.00

Calculations for Wind Normal to 52 ft Face *Additional Runs may be req'd for other wind directions*	Cp	Pressure (psf) +GCpi	 -GCpi
Leeward Walls (Wind Dir Normal to 52 ft wall)	-0.50	-17.56	2.25
Leeward Walls (Wind Dir Normal to 8 ft wall)	-0.20	-12.97	6.84
Side Walls	-0.70	-20.62	-0.81
Roof - Wind Normal to Ridge (Theta>=10) - for Wind Normal to 52 ft face			
Windward - Min Cp	-0.80	-22.09	-2.28
Windward - Max Cp	-0.18	-12.66	7.15
Leeward Normal to Ridge	-0.60	-19.09	0.72
Overhang Top (Windward)	-0.80	-12.18	-12.18
Overhang Top (Leeward)	-0.60	-9.18	-9.18
Overhang Bottom (Applicable on Windward only)	0.80	12.25	12.25

WIND02 v2-21

Detailed Wind Load Design (Method 2) per ASCE 7-02

Roof - Wind Parallel to Ridge (All Theta) - for Wind Normal to 8 ft face			
Dist from Windward Edge: 0 ft to 18 ft - Max Cp	-0.18	-12.66	7.15
Dist from Windward Edge: 0 ft to 4.5 ft - Min Cp	-0.64	-19.68	0.13
Dist from Windward Edge: 4.5 ft to 8 ft - Min Cp	-0.90	-23.68	-3.87
Dist from Windward Edge: 9 ft to 18 ft - Min Cp	-0.50	-17.56	2.25
Dist from Windward Edge: > 18 ft	-0.30	-14.50	5.31

* Horizontal distance from windward edge

Figure 6-10 - External Pressure Coefficients, GCpf

Loads on Main Wind-Force Resisting Systems w/ Ht <= 60 ft

Kh =	2.01*(15/zg)^(2/Alpha)	=	0.70
Kht =	Topographic factor (Fig 6-2)	=	1.00
Qh =	0.00256*(V)^2*ImpFac*Kh*Kht*Kd	=	21.95
Theta =	Angle of Roof	=	18.4 Deg

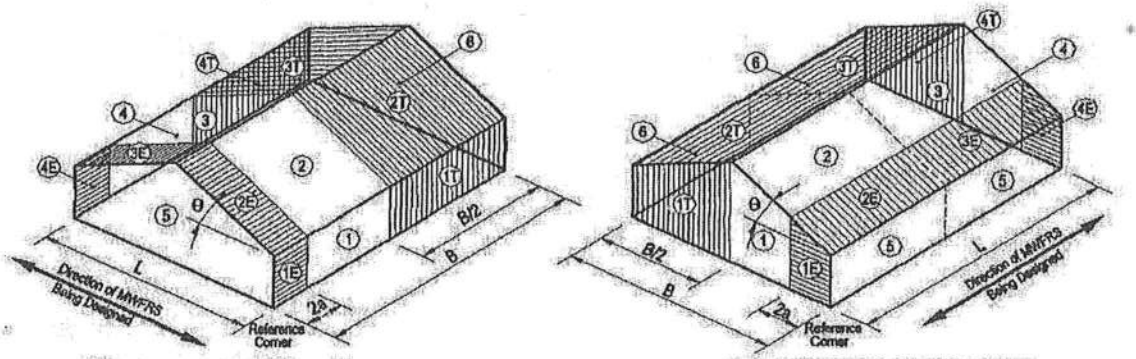

Transverse Direction

Longitudinal Direction

Torsional Load Cases

Wind Pressures on Main Wind Force Resisting System						
Surface	GCpf	+GCpi	-GCpi	qh (psf)	Min P (psf)	Max P (psf)
1	0.52	0.55	-0.55	21.95	-0.74	23.40
2	-0.69	0.55	-0.55	21.95	-27.22	-3.07
3	-0.47	0.55	-0.55	21.95	-22.35	1.79
4	-0.42	0.55	-0.55	21.95	-21.19	2.96
5	-0.45	0.55	-0.55	21.95	-21.95	2.20
6	-0.45	0.55	-0.55	21.95	-21.95	2.20
1E	0.78	0.55	-0.55	21.95	5.04	29.19
2E	-1.07	0.55	-0.55	21.95	-35.56	-11.42
3E	-0.67	0.55	-0.55	21.95	-26.85	-2.70
4E	-0.62	0.55	-0.55	21.95	-25.63	-1.48

* p = qh * (GCpf - GCpi)

Figure 6-11 - External Pressure Coefficients, GCp

WIND02 v2-21

Detailed Wind Load Design (Method 2) per ASCE 7-02
Loads on Components and Cladding for Buildings w/ Ht <= 60 ft

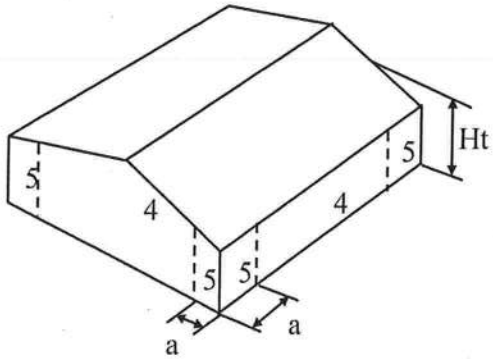

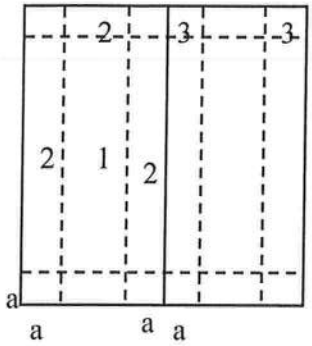

Gabled Roof
7 < Theta <= 45

a = 0.8 ==> 3.00 ft

Double Click on any data entry line to receive a help Screen

Component	Width (ft)	Span (ft)	Area (ft^2)	Zone	GCp Max	GCp Min	Wind Press (lb/ft^2 Max	Wind Press (lb/ft^2 Min
Wall	10	1	10.00	4	1.00	-1.10	34.03	-36.22
Wall Exterior	10	1	10.00	5	1.00	-1.40	34.03	-42.81
Roof	10	1	10.00	1	0.50	-0.90	23.05	-31.83
Roof Exterior	10	1	10.00	2	0.50	-1.70	23.05	-49.39
			0.00					
			0.00					
			0.00					
			0.00					
			0.00					
			0.00					

Note: * Enter Zone 1 through 5, or 1H through 3H for overhangs.

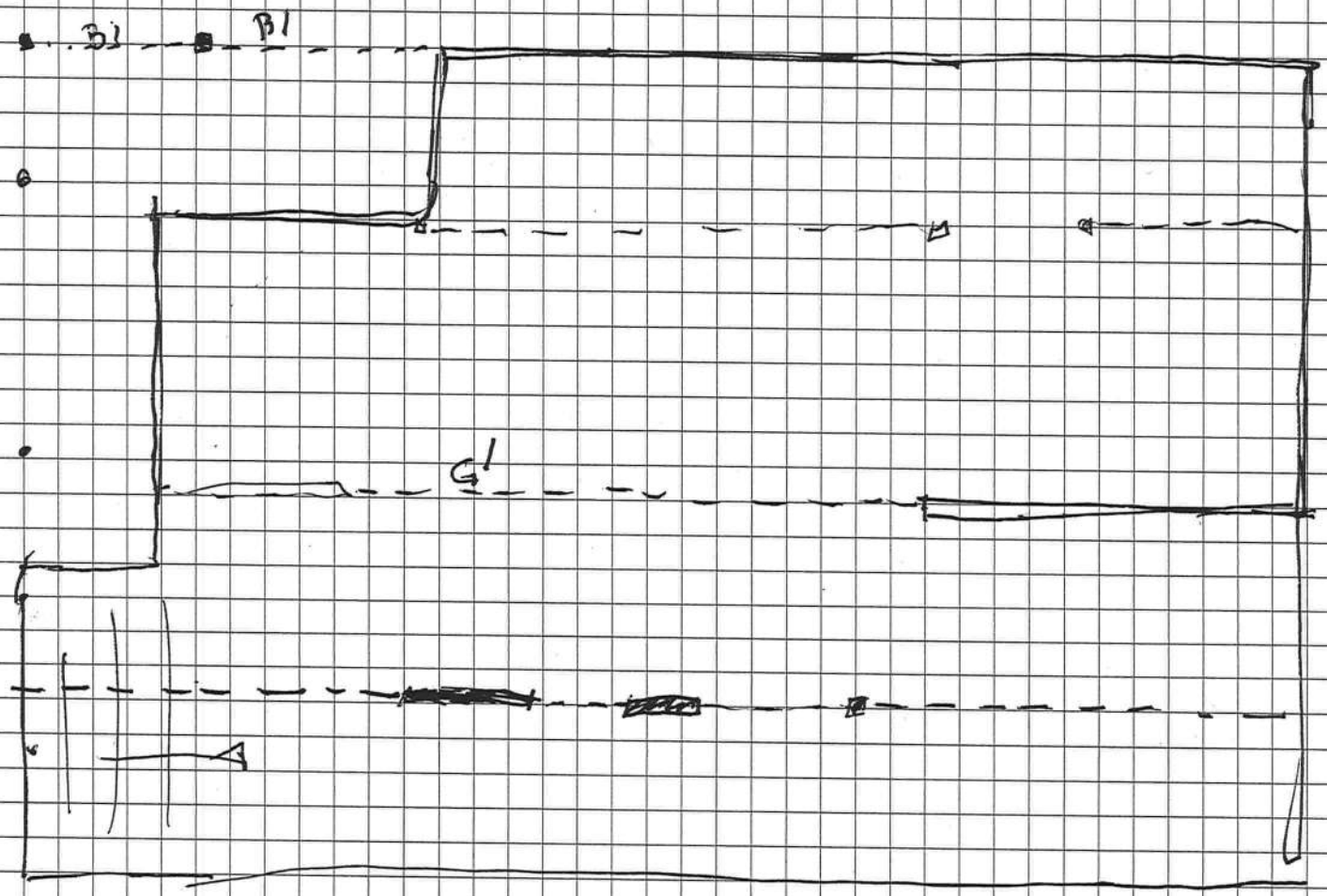

ROOF FRAMING

BEAM SCHEDULE

G = GIRDER
B = BEAM
B = BATTEN

PROJECT #:
PROJECT NAME:
DATE:
ENGINEER:

LAKE CITY OFFICE
930 SW BAYA DRIVE
LAKE CITY, FL 32055
PH: 386.754.3677

STRUCTURAL/CIVIL ENGINEERS
FAX: 386.362.6133
www.gtcdesigngroup.com

GTC DESIGN GROUP, LLC
P.O. BOX 187
LIVE OAK, FL 32064

LIVE OAK OFFICE
130 WEST HOWARD STREET
LIVE OAK, FL 32064
PH: 386.362.3678

SUBJECT

1

- GIRDER BEAMS UPLIFT

DL = 7 psf

WIND = -48.44 (COMPONENTS & CLADDING) NORM TO SURFACE

$= -48.44 \frac{12}{(13.42)} = -43.32$

$P = \frac{wl}{2} = \frac{(7-43.32)(8')(24.3)}{2} = 3095 \text{ lb}$ ⇒ G3 GIRDER WORST CASE

- UPLIFT ON BEAMS (B1, B2, ...) @ PORCH

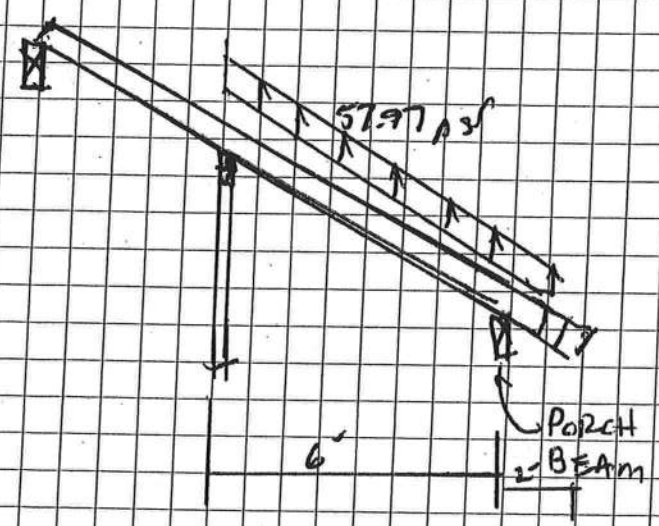

DL = 7 psf
WL = -57.97

$w = (0.6(7) - 57.97)(5') = -268.9 \text{ plf}$

$P = \frac{wl}{2} = \frac{-268.9(10)}{2} = -1344.25 \text{ lb}$

- UPLIFT ON RAFTERS

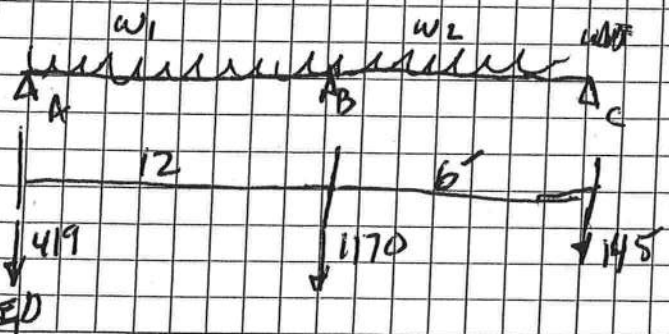

$w_1 = -86.64 \text{ plf}$
$w_2 = -268.9 \text{ plf}$
-115.94 plf

$R_A = 419$
$R_B = 1170$
$R_C = 146$

1 REVISED 1/17/18 SUBJECT

LIVE OAK OFFICE
130 WEST HOWARD STREET
LIVE OAK, FL 32064
PH: 386.362.3678

GTC DESIGN GROUP, LLC
P.O. BOX 187
LIVE OAK, FL 32064

STRUCTURAL/CIVIL ENGINEERS
FAX: 386.362.6133
www.gtcdesigngroup.com

LAKE CITY OFFICE
930 SW BAYA DRIVE
LAKE CITY, FL 32055
PH: 386.754.3677

PROJECT #:
PROJECT NAME:
DATE:
ENGINEER:

1

UPLIFT CONNECTIONS

RIDGE:

REQUIRED UPLIFT = 3095#

USE L2x2x20ga ST ANGLE

~~w/~~ w/(5) #10

(5) #10

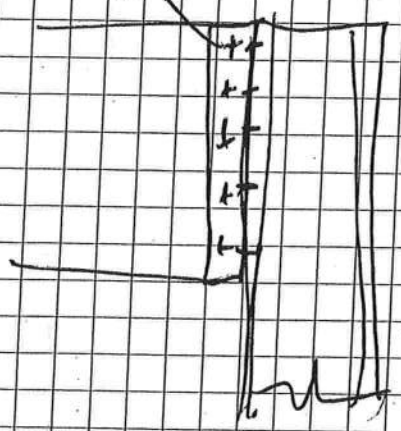

NO OF SCREWS REQUIRED

$\# = \frac{3095\#}{370\#/\text{SCREW}}$

= 8.36 SAY

10 - #10 SCREWS

5 ea SIDE

SCREWS INFORMATION

#10 - 54 MILLS 370# SHEAR

137# UPLIFT/PULLOUT

~~PORCH~~

PORCH & BMS

REQUIRED UPLIFT 1344.23#

$\# \text{ SCREWS} = \frac{1344.23}{370} = 3.6$

SAY 4 - #10 SCREWS (SHEAR)

PULLOUT

$\# \text{ SCREWS} = \frac{1344.23}{137} = 9.8$

SAY 10

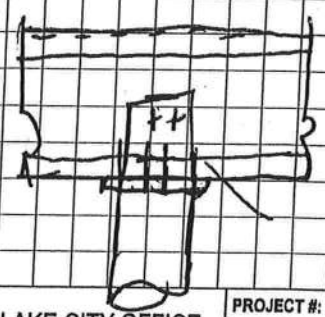

1 REVISED 7/17/07

SUBJECT

LIVE OAK OFFICE
130 WEST HOWARD STREET
LIVE OAK, FL 32064
PH: 386.362.3678

GTC DESIGN GROUP, LLC
P.O. BOX 187
LIVE OAK, FL 32064

STRUCTURAL/CIVIL ENGINEERS
FAX: 386.362.6133
www.gtcdesigngroup.com

LAKE CITY OFFICE
930 SW BAYA DRIVE
LAKE CITY, FL 32055
PH: 386.754.3677

PROJECT #:
PROJECT NAME:
DATE:
ENGINEER:

1

RAFTERS

MAX UPLIFT = 1171 lb

SCREWS # = $\frac{1171}{370}$ = 3.16

SCREWS = 4 - #10 (SHEAR)

SCREWS IN PULLOUT

= $\frac{1171}{137}$ = 8.5

SAY 9 - #10 SCREWS

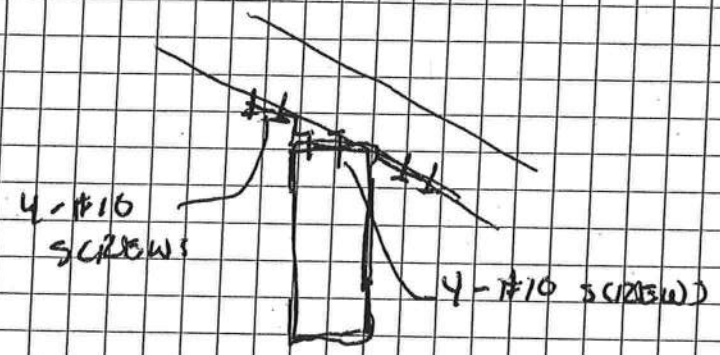

1 REVISED 7/17/07

SUBJECT

LIVE OAK OFFICE
130 WEST HOWARD STREET
LIVE OAK, FL 32064
PH: 386.362.3678

GTC DESIGN GROUP, LLC
P.O. BOX 187
LIVE OAK, FL 32064

STRUCTURAL/CIVIL ENGINEERS
FAX: 386.362.6133
www.gtcdesigngroup.com

LAKE CITY OFFICE
930 SW BAYA DRIVE
LAKE CITY, FL 32055
PH: 386.754.3677

PROJECT #:
PROJECT NAME:
DATE:
ENGINEER:

Cold Formed Steel Design Parameters

	Label	Shape	Length...	Lbyy[ft]	Lbzz[ft]	Lcomp to...	Lcomp bo...	Kyy	Kzz	Cm-yy	Cm-zz	Cb	R	y sway	z sway
1	M1	1200S16...	19	2	2	2									

Joint Reactions

	LC	Joint Label	X [k]	Y [k]	Z [k]	MX [k-ft]	MY [k-ft]	MZ [k-ft]
1	3	N1	0	1.14	0	LOCKED	0	0
2	3	N2	0	1.14	0	0	0	0
3	3	Totals:	0	2.28	0			
4	3	COG (ft):	X: 9.5	Y: 0	Z: 0			

Load Combination Design

	Description	ASIF	CD	ABIF	Service	Hot Rolled	Cold Formed	Wood	Concrete	Footings
1	ASCE 1				Yes	Yes	Yes	Yes		
2	ASCE 2				Yes	Yes	Yes	Yes		
3	ASCE 3A				Yes	Yes	Yes	Yes		
4	ASCE 3B				Yes	Yes	Yes	Yes		
5	ASCE 3C				Yes	Yes	Yes	Yes		
6	ASCE 4A				Yes	Yes	Yes	Yes		
7	ASCE 4B				Yes	Yes	Yes	Yes		
8	ASCE 4C				Yes	Yes	Yes	Yes		
9	ASCE 5A				Yes	Yes	Yes	Yes		
10	ASCE 5B				Yes	Yes	Yes	Yes		
11	ASCE 6A				Yes	Yes	Yes	Yes		
12	ASCE 6B				Yes	Yes	Yes	Yes		
13	ASCE 6C				Yes	Yes	Yes	Yes		
14	ASCE 6D				Yes	Yes	Yes	Yes		
15	ASCE 6E				Yes	Yes	Yes	Yes		
16	ASCE 6F				Yes	Yes	Yes	Yes		
17	ASCE 7				Yes	Yes	Yes	Yes		
18	ASCE 8				Yes	Yes	Yes	Yes		

Member Section Stresses

	LC	Member Label	Sec	Axial[ksi]	y Shear[ksi]	z Shear[ksi]	y top Bendi...	y bot Bendi...	z top Bendi...	z bot Bendi...
1	3	M1	1	0	1.648	0	0	0	0	0
2			2	0	.824	0	14.982	-14.982	0	0
3			3	0	0	0	19.975	-19.975	0	0
4			4	0	-.824	0	14.982	-14.982	0	0
5			5	0	-1.648	0	0	0	0	0

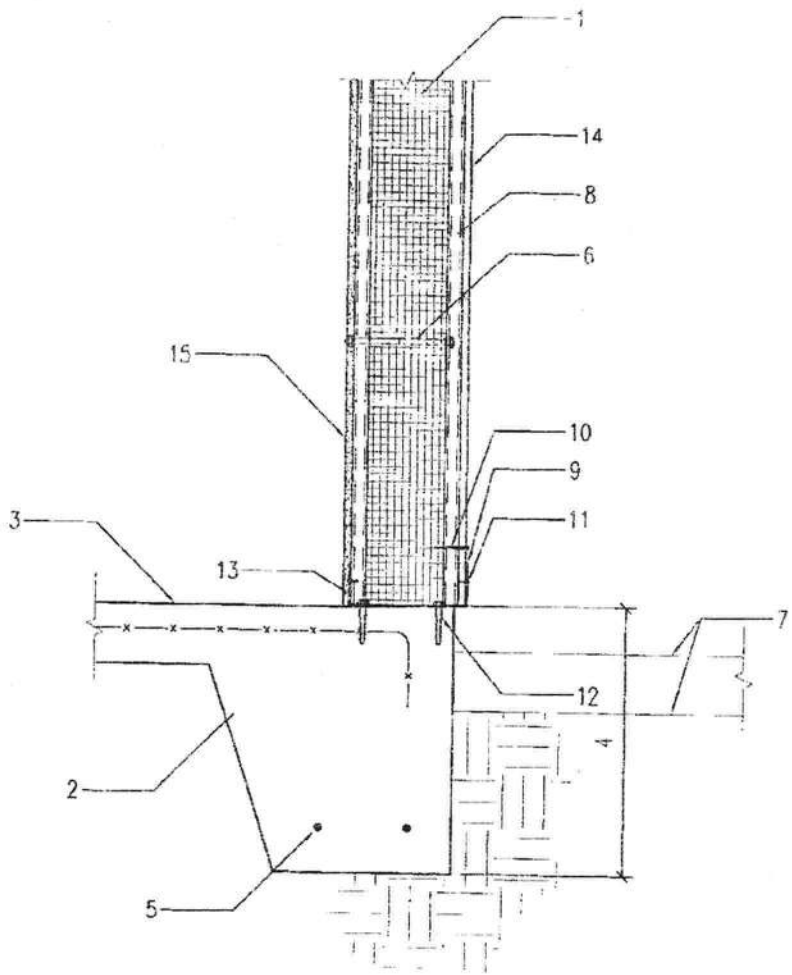

KEY NOTES:

1. 7 ¼ " THICK EXPANDED POLYSTRENE (EPS) WALL
2. CONCRETE FOOTING
3. CONCRETE SLAB ON GRADE
4. MINIMUM FOOTING DEPTH PER G.S.N.
5. (2) #5 CONT.
6. #12X7" LONG SIP SCREW 12" FROM BOTTOM OF WALL AND AT 48" O.C.
7. SIDEWALK, PAVEMENT OR FINISH GRADE PER ARCHITECTURAL DRAWINGS
8. 2"X1" X 20 GA STEEL TUBE STUD EACH SIDE AT 24" O.C. LET INTO EPS 1"
9. CONTINUOUS L2" X 1.5" X 20 GA (LLV) EACH SIDE OF WALL
10. #8 X ½" SMS AT EACH TUBE. UNO IN SHEAR WALL SCHEDULE
11. (1) #8 X1/2" SMS AT 24" O.C. WITHIN 3" OF STEEL TUBE. UNO IN SHEAR WALL SCHEDULE OR BRACED WALL SCHEDULE
12. (2) ¼" x 2¼" TAPCON CONC. SCREWS @ 12" O.C.
13. CONT. 20ga. TRACK SECTION W/ 1.5" LEGS
14. 5/16" HARDIPANEL SHEAR WALL SHEATHING FASTENED W/ #8 x 1" SCREWS @ 4" O.C. @ EDGE & 8" O.C. @ FIELD.
15. ½" G.W.B. FASTENED W/ (6) 1¼" "S" SCREWS @ 4" O.C. @ EDGES & 8" O.C. @ FIELD

P.O. Box 167
190 West Forest Street
Lake City, FL 32056
Phone: (386) 362-3678
Fax: (386) 182-8733
Gary Gill, P.E.
Auth. # 9461

BLATTER RESIDENCE
NEW HOUSE
COLUMBIA COUNTY, FLORIDA

MODIFIED FOUNDATION DETAIL

PF07-128
D. PRICE
06
A-2.0

6-JUN-07

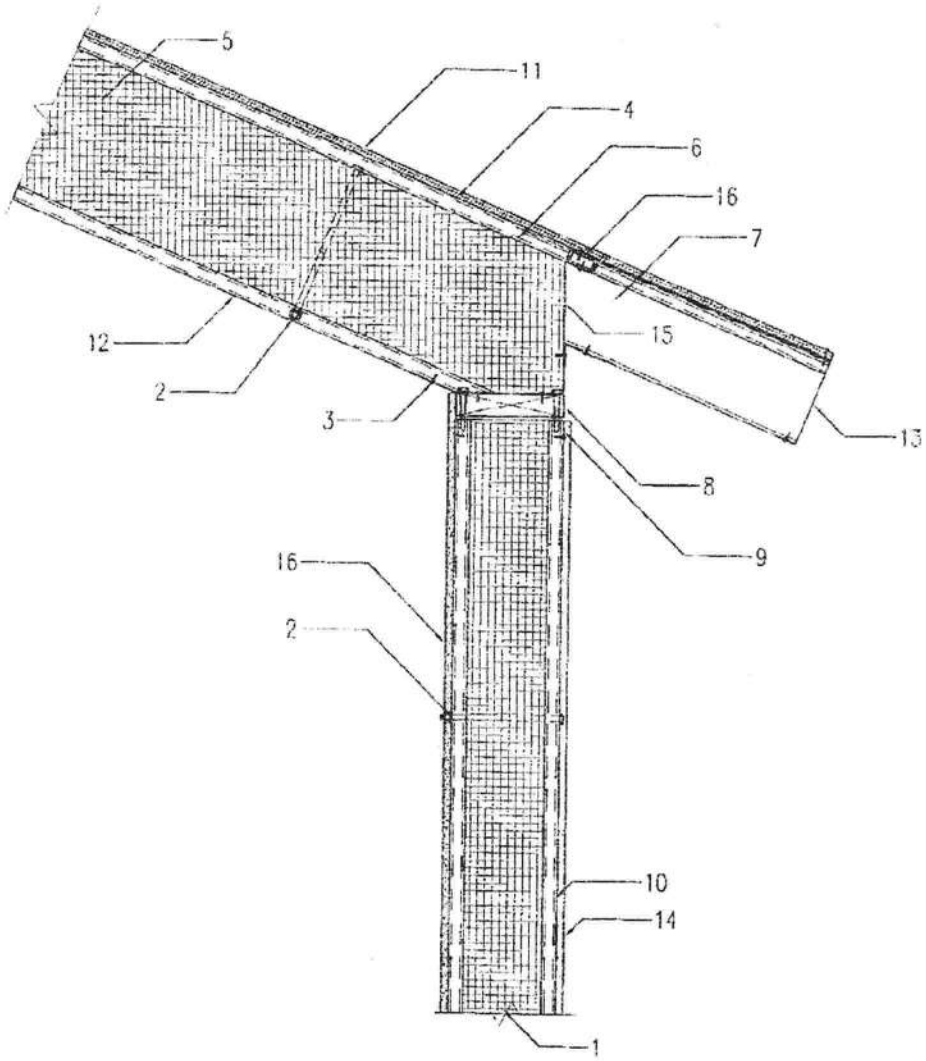

WALL DETAIL

SCALE: 1" = 1'-0"

KEY NOTES:

1. 7¼" THICK EXPANDED POLYSTYRENE (EPS WALL)
2. #12 x 7" LONG SIP SCREW 12" FROM TOP OF WALL AND @ 48" O.C.
3. CONT. 20ga. SECTION W/ 2" LONG FLANGES AND #8 SMS @ EA. ROOF PAN PANEL TUBE & (2) #10 x 2" LONG WOOD SCREWS TO 2 x 8 PLATE @ 12" O.C. STAGGERED UNO IN SHEAR WALL SCHEDULE OR BRACED WALL SCHEDULE.
4. LIGHT GAUGE STEEL TUBE OR C-SECTION. LET INTO ROOF PANEL FULL DEPTH.
5. 12" THICK EXPANDED POLYSTYRENE (EPS) ROOF PANEL.
6. #14 SCREW 2" LONGER THAN PANEL THICKNESS @ EA. ROOF PANEL TUBE.
7. 600 XC 20 STUD @ EA. TUBE.
8. CONT. 2 x 8 WOOD PLATE W/ #10 x 2" LONG SMS TO CONT. ANGLE EA. SIDE OF WALL WITHIN 3" OF TUBE STUD UNO IN SHEAR WALL SCHEDULE OR BACED WALL SCHEDUL
9. CONT. ∠2 x 1.5 x 20ga. (LLV) W/ (1) #8 x ½" LONG SMS @ EA. TUBE UNO IN SHEARWALL SCHEDULE.
10. 2" x 1" 20ga. O.C. LIT INTO WALL 1".
11. ROOF SHEATHING.
12. LIGHT GAUGE STEEL TUBE.
13. 600 MT 20 TRACK W/ #8 SMS TO EA. ROOF PANEL TUBE & EAVE STUD.
14. 5/16" HARDIPANEL SHEAR WALL SHEATHING FASTENED W/ #8 4" O.C. @ EDGE & 8" O.C. @ FIELD.15. CONT. ∠2 x 2 STUD AND #10 x ½" SMS TO SHEET STEEL @ 12" O.C.
15. 1 x 2 x 20ga. TUBE BETWEEN TOP TUBES.
16. ½" G.W.B. FASTENED W/ (6) 1¼" "S" SCREWS @ 4" O.C. @ & 8" O.C. @ FIELD

P.O. Box 167
130 West Phillips Street
Lake City, FL 32056
Phone: (386) 362-3878
Fax: (386) 362-8133
Cary Gill, P.E.
Auth. # 9467

BLATTER RESIDENCE
NEW HOUSE
COLUMBIA COUNTY, FLORIDA

MODIFIED WALL DETAIL

07-128

D. PRICE

CG

A-1.0

5-Jun-07

FORM 600A-2004R

EnergyGauge® 4.5

FLORIDA ENERGY EFFICIENCY CODE FOR BUILDING CONSTRUCTION

Florida Department of Community Affairs

Residential Whole Building Performance Method A

Project Name:	Blatter Residence	Builder:	
Address:		Permitting Office:	
City, State:	,	Permit Number:	
Owner:	Lee and Angie Blatter	Jurisdiction Number:	
Climate Zone:	North		

1. New construction or existing	New	—
2. Single family or multi-family	Single family	—
3. Number of units, if multi-family	1	—
4. Number of Bedrooms	2	—
5. Is this a worst case?	Yes	—
6. Conditioned floor area (ft²)	2084 ft²	—
7. Glass type[1] and area: (Label reqd. by 13-104.4.5 if not default)		
a. U-factor: (or Single or Double DEFAULT)	Description Area 7a. (Dble Default) 157.0 ft²	—
b. SHGC: (or Clear or Tint DEFAULT)	7b. (Clear) 157.0 ft²	—
8. Floor types		
a. Slab-On-Grade Edge Insulation	R=0.0, 274.0(p) ft	—
b. N/A		—
c. N/A		—
9. Wall types		
a. Frame, Wood, Exterior	R=32.0, 1972.0 ft²	—
b. N/A		—
c. N/A		—
d. N/A		—
e. N/A		—
10. Ceiling types		—
a. Under Attic	R=52.0, 2084.0 ft²	
b. N/A		—
c. N/A		—
11. Ducts		—
a. Sup: Unc, Ret: Unc, AH: Interior	Sup. R=6.0, 129.0 ft	
b. N/A		—
		—

12. Cooling systems		
a. Central Unit	Cap: 48.0 kBtu/hr	—
	SEER: 13.00	—
b. N/A		—
		—
c. N/A		—
		—
13. Heating systems		
a. Electric Heat Pump	Cap: 48.0 kBtu/hr	—
	HSPF: 7.70	—
b. N/A		—
		—
c. N/A		—
		—
14. Hot water systems		
a. N/A		—
		—
b. N/A		—
		—
c. Conservation credits (HR-Heat recovery, Solar DHP-Dedicated heat pump)		—
15. HVAC credits (CF-Ceiling fan, CV-Cross ventilation, HF-Whole house fan, PT-Programmable Thermostat, MZ-C-Multizone cooling, MZ-H-Multizone heating)	PT	—

Glass/Floor Area: 0.08

Total as-built points: 18151

Total base points: 25242

PASS

I hereby certify that the plans and specifications covered by this calculation are in compliance with the Florida Energy Code.

PREPARED BY: Gary Gill

DATE: 6/1/07

I hereby certify that this building, as designed, is in compliance with the Florida Energy Code.

OWNER/AGENT: _____

DATE: _____

Review of the plans and specifications covered by this calculation indicates compliance with the Florida Energy Code. Before construction is completed this building will be inspected for compliance with Section 553.908 Florida Statutes.

GREAT SEAL OF THE STATE OF FLORIDA — IN GOD WE TRUST

BUILDING OFFICIAL: _____

DATE: _____

1 Predominant glass type. For actual glass type and areas, see Summer & Winter Glass output on pages 2&4.

FORM 600A-2004R

EnergyGauge® 4.5

SUMMER CALCULATIONS

Residential Whole Building Performance Method A - Details

ADDRESS: , , , PERMIT #:

BASE

GLASS TYPES

.18 X Conditioned Floor Area	X BSPM	= Points
.18 2084.0	18.59	6973.0

WALL TYPES	Area X BSPM	= Points
Adjacent 0.0	0.00	0.0
Exterior 1972.0	1.70	3352.4
Base Total: 1972.0		3352.4

DOOR TYPES	Area X BSPM	= Points
Adjacent 0.0	0.00	0.0
Exterior 63.0	6.10	384.3
Base Total: 63.0		384.3

CEILING TYPES	Area X BSPM	= Points
Under Attic 2084.0	1.73	3605.3
Base Total: 2084.0		3605.3

FLOOR TYPES	Area X BSPM	= Points
Slab 274.0(p)	-37.0	-10138.0
Raised 0.0	0.00	0.0
Base Total:		-10138.0

INFILTRATION	Area X BSPM	= Points
2084.0	10.21	21277.6

AS-BUILT

Type/SC	Overhang Ornt	Len	Hgt	Area X	SPM X	SOF =	Points
1.Double, Clear	N	2.0	4.5	9.0	19.20	0.85	147.0
2.Double, Clear	N	2.0	6.3	40.0	19.20	0.91	697.0
3.Double, Clear	E	2.0	0.0	30.0	42.06	0.36	450.0
4.Double, Clear	S	2.0	0.0	30.0	35.87	0.43	464.0
5.Double, Clear	S	2.0	3.3	8.0	35.87	0.61	175.0
6.Double, Clear	W	2.0	6.3	20.0	38.52	0.86	665.0
7.Double, Clear	W	2.0	6.3	20.0	38.52	0.86	665.0
As-Built Total:				157.0			3263.0

Type	R-Value	Area X	SPM	= Points
1. Frame, Wood, Exterior	32.0	1972.0	0.60	1183.2
As-Built Total:		1972.0		1183.2

Type	Area X	SPM	= Points
1.Exterior Wood	63.0	6.10	384.3
As-Built Total:	63.0		384.3

Type	R-Value	Area X	SPM X SCM	= Points
1. Under Attic	52.0	2084.0	1.52 X 1.00	3167.7
As-Built Total:		2084.0		3167.7

Type	R-Value	Area X	SPM	= Points
1. Slab-On-Grade Edge Insulation	0.0	274.0(p	-41.20	-11288.8
As-Built Total:		274.0		-11288.8

Area X	SPM	= Points
2084.0	10.21	21277.6

FORM 600A-2004R

EnergyGauge® 4.5

WINTER CALCULATIONS

Residential Whole Building Performance Method A - Details

ADDRESS: , , , PERMIT #:

BASE

GLASS TYPES .18 X Conditioned Floor Area	X BWPM	= Points
.18 2084.0	20.17	7566.0

WALL TYPES	Area	X BWPM	= Points
Adjacent	0.0	0.00	0.0
Exterior	1972.0	3.70	7296.4
Base Total:	1972.0		7296.4

DOOR TYPES	Area	X BWPM	= Points
Adjacent	0.0	0.00	0.0
Exterior	63.0	12.30	774.9
Base Total:	63.0		774.9

CEILING TYPES	Area	X BWPM	= Points
Under Attic	2084.0	2.05	4272.2
Base Total:	2084.0		4272.2

FLOOR TYPES	Area	X BWPM	= Points
Slab	274.0(p)	8.9	2438.6
Raised	0.0	0.00	0.0
Base Total:			2438.6

INFILTRATION	Area	X BWPM	= Points
	2084.0	-0.59	-1229.6

AS-BUILT

Type/SC	Overhang Ornt	Len	Hgt	Area	X WPM	X WOF	= Points
1.Double, Clear	N	2.0	4.5	9.0	24.58	1.01	222.0
2.Double Clear	N	2.0	6.3	40.0	24.58	1.00	987.0
3.Double, Clear	E	2.0	0.0	30.0	18.79	1.51	849.0
4.Double, Clear	S	2.0	0.0	30.0	13.30	3.66	1460.0
5.Double, Clear	S	2.0	3.3	8.0	13.30	1.90	201.0
6.Double, Clear	W	2.0	6.3	20.0	20.73	1.04	430.0
7.Double, Clear	W	2.0	6.3	20.0	20.73	1.04	430.0
As-Built Total:				157.0			4579.0

Type	R-Value	Area	X WPM	= Points
1. Frame, Wood, Exterior	32.0	1972.0	1.50	2958.0
As-Built Total:		1972.0		2958.0

Type	Area	X WPM	= Points
1 Exterior Wood	63.0	12.30	774.9
As-Built Total:	63.0		774.9

Type	R-Value	Area	X WPM	X WCM	= Points
1. Under Attic	52.0	2084.0	1.81	X 1.00	3772.0
As-Built Total:		2084.0			3772.0

Type	R-Value	Area	X WPM	= Points
1. Slab-On-Grade Edge Insulation	0.0	274.0(p	18.80	5151.2
As-Built Total:		274.0		5151.2

	Area	X WPM	= Points
	2084.0	-0.59	-1229.6

FORM 600A-2004R

EnergyGauge® 4.5

SUMMER CALCULATIONS

Residential Whole Building Performance Method A - Details

ADDRESS: , , , PERMIT #:

BASE			AS-BUILT						
Summer Base Points: 25454.7			**Summer As-Built Points:**						**17987.0**
Total Summer Points	X System Multiplier	= Cooling Points	Total Component (System - Points)	X Cap Ratio	X Duct Multiplier (DM x DSM x AHU)	X System Multiplier	X Credit Multiplier	= Cooling Points
			(sys 1: Central Unit 48000btuh .SEER/EFF(13.0) Ducts Unc(S),Unc(R),Int(AH),R6.0(INS)					
			17987	1.00	(1.09 x 1.147 x 0.91)	0.260	0.950	5054.6
25454.7	**0.3250**	**8272.8**	**17987.0**	**1.00**	**1.138**	**0.260**	**0.950**	**5054.6**

FORM 600A-2004R

EnergyGauge® 4.5

WINTER CALCULATIONS

Residential Whole Building Performance Method A - Details

ADDRESS: , , , PERMIT #:

BASE			AS-BUILT						
Winter Base Points:		21118.5	Winter As-Built Points:						16005.6
Total Winter Points	X System Multiplier	= Heating Points	Total Component (System - Points)	X Cap Ratio	X Duct Multiplier (DM x DSM x AHU)	X System Multiplier	X Credit Multiplier	= Heating Points	
			(sys 1: Electric Heat Pump 48000 btuh ,EFF(7.7) Ducts:Unc(S),Unc(R) Int(AH),R6.0						
			16005.6	1.000	(1.069 x 1.169 x 0.93)	0.443	0.950	7825.9	
21118.5	0.5540	11699.7	16005.6	1.00	1.162	0.443	0.950	7825.9	

FORM 600A-2004R

EnergyGauge® 4.5

WATER HEATING & CODE COMPLIANCE STATUS

Residential Whole Building Performance Method A - Details

ADDRESS: ,,, PERMIT #:

BASE				AS-BUILT						
WATER HEATING										
Number of Bedrooms	X	Multiplier	= Total	Tank Volume	EF	Number of Bedrooms	X Tank Ratio	X Multiplier	X Credit Multiplier	= Total
2		2635.00	5270.0			2	1.00	2635.00	1.00	5270.0
				As-Built Total:						5270.0

CODE COMPLIANCE STATUS

BASE				AS-BUILT			
Cooling Points +	Heating Points +	Hot Water Points =	Total Points	Cooling Points +	Heating Points +	Hot Water Points =	Total Points
8273	11700	5270	25242	5055	7826	5270	18151

PASS

System Sizing Calculations - Winter

Residential Load - Whole House Component Details

Lee and Angie Blatter

Project Title:
Blatter Residence

Code Only
Professional Version
Climate: North

6/1/2007

Reference City: Gainesville (Defaults) Winter Temperature Difference: 37.0 F

This calculation is for Worst Case. The house has been rotated 315 degrees.

Component Loads for Whole House

Window	Panes/SHGC/Frame/U	Orientation	Area(sqft) X	HTM=	Load
1	2, Clear, Metal, 0.87	NW	9.0	32.2	290 Btuh
2	2, Clear, Metal, 0.87	NW	40.0	32.2	1288 Btuh
3	2, Clear, Metal, 0.87	NE	30.0	32.2	966 Btuh
4	2, Clear, Metal, 0.87	SE	30.0	32.2	966 Btuh
5	2, Clear, Metal, 0.87	SE	8.0	32.2	258 Btuh
6	2, Clear, Metal, 0.87	SW	20.0	32.2	644 Btuh
7	2, Clear, Metal, 0.87	SW	20.0	32.2	644 Btuh
	Window Total		157(sqft)		5054 Btuh
Walls	Type	R-Value	Area X	HTM=	Load
1	Frame - Wood - Ext(0.07)	32.0	1972	2.4	4824 Btuh
	Wall Total		1972		4824 Btuh
Doors	Type		Area X	HTM=	Load
1	Wood - Exterior		63	20.0	1259 Btuh
	Door Total		63		1259Btuh
Ceilings	Type/Color/Surface	R-Value	Area X	HTM=	Load
1	Unvented Attic/D/Shin	52.0	2084	0.7	1444 Btuh
	Ceiling Total		2084		1444Btuh
Floors	Type	R-Value	Size X	HTM=	Load
1	Slab On Grade	0	274.0 ft(p)	43.7	11963 Btuh
	Floor Total		274		11963 Btuh
			Zone Envelope Subtotal:		24544 Btuh
Infiltration	Type	ACH X	Volume(cuft)	walls(sqft) CFM=	
	Natural	0.11	16672	1972 30.6	1238 Btuh
Ductload	Notably sealed, Supply(R6.0-Attic), Return(R6.0-Attic) (DLM of 0.149)				3836 Btuh
Zone #1			**Sensible Zone Subtotal**		**29618 Btuh**

WHOLE HOUSE TOTALS

	Subtotal Sensible	29618 Btuh
	Ventilation Sensible	0 Btuh
	Total Btuh Loss	29618 Btuh

Manual J Winter Calculations

Residential Load - Component Details (continued)

Lee and Angie Blatter

Project Title:
Blatter Residence

Code Only
Professional Version
Climate: North

6/1/2007

EQUIPMENT		
1. Electric Heat Pump	#	48000 Btuh

Key: Window types (SHGC - Shading coefficient of glass as SHGC numerical value or as clear or tint)
(Frame types - metal, wood or insulated metal)
(U - Window U-Factor or 'DEF' for default)
(HTM - ManualJ Heat Transfer Multiplier)
Key: Floor size (perimeter(p) for slab-on-grade or area for all other floor types)

Version 8
For Florida residences only

Manual J Summer Calculations

Residential Load - Component Details (continued)

Lee and Angie Blatter

Project Title:
Blatter Residence

Code Only
Professional Version
Climate: North

6/1/2007

WHOLE HOUSE TOTALS

Whole House Totals for Cooling	**Sensible Envelope Load All Zones**	**24435 Btuh**
	Sensible Duct Load	7868 Btuh
	Total Sensible Zone Loads	**32303 Btuh**
	Sensible ventilation	0 Btuh
	Blower	0 Btuh
	Total sensible gain	**32303 Btuh**
	Latent infiltration gain (for 54 gr. humidity difference)	609 Btuh
	Latent ventilation gain	0 Btuh
	Latent duct gain	1476 Btuh
	Latent occupant gain (5 people @ 200 Btuh per person)	1000 Btuh
	Latent other gain	850 Btuh
	Latent total gain	**3935 Btuh**
	TOTAL GAIN	**36238 Btuh**

EQUIPMENT

1. Central Unit	#	48000 Btuh

*Key: Window types (Pn - Number of panes of glass)
(SHGC - Shading coefficient of glass as SHGC numerical value or as clear or tint)
(U - Window U-Factor or 'DEF' for default)
(InSh - Interior shading device: none(N), Blinds(B), Draperies(D) or Roller Shades(R))
(ExSh - Exterior shading device: none(N) or numerical value)
(BS - Insect screen: none(N), Full(F) or Half(H))
(Ornt - compass orientation)

Version 8
For Florida residences only

System Sizing Calculations - Summer

Residential Load - Whole House Component Details

Lee and Angie Blatter

Project Title:
Blatter Residence

Code Only
Professional Version
Climate: North

Reference City: Gainesville (Defaults) Summer Temperature Difference: 17.0 F 6/1/2007

This calculation is for Worst Case. The house has been rotated 315 degrees.

Component Loads for Whole House

Window	Type* Pn/SHGC/U/InSh/ExSh/IS	Ornt	Overhang Len	Overhang Hgt	Window Area(sqft) Gross	Shaded	Unshaded	HTM Shaded	HTM Unshaded	Load
1	2, Clear, 0.87, B-M, N,N	NW	2ft.	4.5ft	9.0	0.0	9.0	23	51	459 Btuh
2	2, Clear, 0.87, B-M, N,N	NW	2ft.	6.33	40.0	0.0	40.0	23	51	2039 Btuh
3	2, Clear, 0.87, B-M, N,N	NE	2ft.	0ft	30.0	0.0	30.0	23	51	1530 Btuh
4	2, Clear, 0.87, B-M, N,N	SE	2ft.	0ft	30.0	30.0	0.0	23	54	701 Btuh
5	2, Clear, 0.87, B-M, N,N	SE	2ft.	3.33	8.0	8.0	0.0	23	54	187 Btuh
6	2, Clear, 0.87, B-M, N,N	SW	2ft.	6.33	20.0	8.1	11.9	23	54	835 Btuh
7	2, Clear, 0.87, B-M, N,N	SW	2ft.	6.33	20.0	8.1	11.9	23	54	835 Btuh
	Window Total				157 (sqft)					6586 Btuh

Walls	Type	R-Value/U-Value	Area(sqft)	HTM	Load
1	Frame - Wood - Ext	32.0/0.07	1972.0	1.1	2256 Btuh
	Wall Total		1972 (sqft)		2256 Btuh

Doors	Type	Area (sqft)	HTM	Load
1	Wood - Exterior	63.0	15.1	953 Btuh
	Door Total	63 (sqft)		953 Btuh

Ceilings	Type/Color/Surface	R-Value	Area(sqft)	HTM	Load
1	Unvented Attic/DarkShingle	52.0	2084.0	1.3	2810 Btuh
	Ceiling Total		2084 (sqft)		2810 Btuh

Floors	Type	R-Value	Size	HTM	Load
1	Slab On Grade	0.0	274 (ft(p))	0.0	0 Btuh
	Floor Total		274.0 (sqft)		0 Btuh

			Zone Envelope Subtotal:		12604 Btuh

Infiltration	Type	ACH	Volume(cuft)	wall area(sqft)	CFM=	Load
	SensibleNatural	0.06	16672	1972	16.7	310 Btuh

Internal gain	Occupants		Btuh/occupant		Appliance	Load
	5	X	230	+	8000	9150 Btuh

	Sensible Envelope Load	22064 Btuh
Duct load	Notably sealed, Supply(R6.0-Attic), Return(R6.0-Attic) (DGM of 0.322)	7104 Btuh
	Sensible Zone Load	**29169 Btuh**

The following window Excursion will be assigned to the system loads.

Windows	July excursion for System 1	2371 Btuh
	Excursion Subtotal:	2371 Btuh
Duct load		763 Btuh
	Sensible Excursion Load	**3135 Btuh**

BUILDING INPUT SUMMARY REPORT

PROJECT

Title:	Blatter Residence	Family Type:	Single	Address Type:	Street Address
Owner:	Lee and Angie Blatter	New/Existing:	New	Lot #:	N/A
# of Units:	1	Bedrooms:	2	Subdivision:	N/A
Builder Name:	(blank)	Conditioned Area:	2084	Platbook:	N/A
Climate:	North	Total Stories:	1	Street:	(blank)
Permit Office:	(blank)	Worst Case:	Yes	County:	(blank)
Jurisdiction #:	(blank)	Rotate Angle:	0	City, St, Zip:	

FLOORS

#	Floor Type	R-Val	Area/Perimeter	Units
1	Slab-On-Grade Edge Insulation	0.0	274.0(p) ft	1

DOORS

#	Door Type	Orientation	Area	Units
1	Wood	Exterior	21.0 ft²	3

CEILINGS

#	Ceiling Type	R-Val	Area	Base Area	Units
1	Under Attic	52.0	2084.0 ft²	2084.0 ft²	1

Credit Multipliers: None

COOLING

#	System Type	Efficiency	Capacity
1	Central Unit	SEER: 13.00	48.0 kBtu/hr

Credit Multipliers: PT

WALLS

#	Wall Type	Location	R-Val	Area	Units
1	Frame - Wood	Exterior	32.0	1972.0 ft²	1

HEATING

#	System Type	Efficiency	Capacity
1	Electric Heat Pump	HSPF: 7.70	48.0 kBtu/hr

Credit Multipliers: PT

WINDOWS

#	Panes	Tint	Ornt	Area	OH Length	OH Hght	Units
1	Double	Clear	N	9.0 ft²	2.0 ft	4.5 ft	1
2	Double	Clear	N	20.0 ft²	2.0 ft	6.3 ft	2
3	Double	Clear	E	15.0 ft²	2.0 ft	0.0 ft	2
4	Double	Clear	S	15.0 ft²	2.0 ft	0.0 ft	2
5	Double	Clear	S	8.0 ft²	2.0 ft	3.3 ft	1
6	Double	Clear	W	10.0 ft²	2.0 ft	6.3 ft	2
7	Double	Clear	W	20.0 ft²	2.0 ft	6.3 ft	1

DUCTS

#	Supply Location	Return Location	Air Handler Location	Supply R-Val	Supply Length
1	Uncond.	Uncond.	Interior	6.0	129.0 ft

Credit Multipliers: None

WATER

#	System Type	EF	Cap.	Conservation Type	Con. EF

REFR.

#	Use Default?	Annual Operating Cost	Electric Rate
1	Yes	N/A	N/A

MISC

Rater Name:	CodeOnlyPro	Class #:	3	Pool Size:	0
Rater Certification #:	CodeOnlyPro	Duct Leakage Type:	N/A	Pump Size:	0.00 hp
Area Under Fluorescent:	0.0	Visible Duct Disconnects:	N/A	Dryer Type:	Electric
Area Under Incandescent:	2084.0	Leak Free Duct System Proposed:	No	Stove Type:	Electric
NOTE: Not all Rating info shown		HRV/ERV System Present?:	No	Avg Ceil Hgt:	

FORM 600A-2004R

EnergyGauge® 4.5

Code Compliance Checklist

Residential Whole Building Performance Method A - Details

ADDRESS: , , , PERMIT #:

6A-21 INFILTRATION REDUCTION COMPLIANCE CHECKLIST

COMPONENTS	SECTION	REQUIREMENTS FOR EACH PRACTICE	CHECK
Exterior Windows & Doors	606.1.ABC 1.1	Maximum: .3 cfm/sq.ft. window area; .5 cfm/sq.ft. door area	
Exterior & Adjacent Walls	606.1.ABC 1.2.1	Caulk, gasket, weatherstrip or seal between: windows/doors & frames, surrounding wall; foundation & wall sole or sill plate; joints between exterior wall panels at corners utility penetrations; between wall panels & top/bottom plates; between walls and floor. EXCEPTION: Frame walls where a continuous infiltration barrier is installed that extends from, and is sealed to, the foundation to the top plate	
Floors	606.1.ABC.1.2.2	Penetrations/openings >1/8" sealed unless backed by truss or joint members. EXCEPTION: Frame floors where a continuous infiltration barrier is installed that is sealed to the perimeter, penetrations and seams	
Ceilings	606.1.ABC.1.2.3	Between walls & ceilings; penetrations of ceiling plane of top floor; around shafts, chases, soffits, chimneys, cabinets sealed to continuous air barrier; gaps in gyp board & top plate; attic access. EXCEPTION: Frame ceilings where a continuous infiltration barrier is installed that is sealed at the perimeter, at penetrations and seams.	
Recessed Lighting Fixtures	606.1.ABC.1.2.4	Type IC rated with no penetrations sealed; or Type IC or non-IC rated, installed inside a sealed box with 1/2" clearance & 3" from insulation, or Type IC rated with < 2.0 cfm from conditioned space, tested.	
Multi-story Houses	606.1.ABC.1.2.5	Air barrier on perimeter of floor cavity between floors	
Additional Infiltration reqts	606.1.ABC.1.3	Exhaust fans vented to outdoors, dampers; combustion space heaters comply with NFPA, have combustion air	

6A-22 OTHER PRESCRIPTIVE MEASURES (must be met or exceeded by all residences.)

COMPONENTS	SECTION	REQUIREMENTS	CHECK
Water Heaters	612.1	Comply with efficiency requirements in Table 612.1.ABC.3.2. Switch or clearly marked cir breaker (electric) or cutoff (gas) must be provided. External or built-in heat trap required.	
Swimming Pools & Spas	612.1	Spas & heated pools must have covers (except solar heated). Non-commercial pools must have a pump timer. Gas spa & pool heaters must have a minimum thermal efficiency of 78%.	
Shower heads	612.1	Water flow must be restricted to no more than 2.5 gal ons per minute at 80 PSIG.	
Air Distribution Systems	610.1	All ducts, fittings, mechanical equipment and plenum chambers shall be mechanically attached sealed, insulated, and installed in accordance with the criteria of Section 610. Ducts in unconditioned attics: R-6 min. insulation.	
HVAC Controls	607.1	Separate readily accessible manual or automatic thermostat for each system.	
Insulation	604.1, 602.1	Ceilings-Min. R-19. Common walls-Frame R-11 or CBS R-3 both sides. Common ceiling & floors R-11.	

Residential System Sizing Calculation

Summary

Lee and Angie Blatter

Project Title:
Blatter Residence

Code Only
Professional Version
Climate: North

6/1/2007

Location for weather data: Gainesville - Defaults: Latitude(29) Altitude(152 ft.) Temp Range(M)
Humidity data: Interior RH (50%) Outdoor wet bulb (77F) Humidity difference(54gr.)

Winter design temperature	33	F	Summer design temperature	92	F
Winter setpoint	70	F	Summer setpoint	75	F
Winter temperature difference	37	F	Summer temperature difference	17	F
Total heating load calculation	**29618**	**Btuh**	**Total cooling load calculation**	**33103**	**Btuh**
Submitted heating capacity	% of calc	Btuh	Submitted cooling capacity	% of calc	Btuh
Total (Electric Heat Pump)	162.1	48000	Sensible (SHR = 0.75)	123.4	36000
Heat Pump + Auxiliary(0.0kW)	162.1	48000	Latent	305.0	12000
			Total (Electric Heat Pump)	145.0	48000

WINTER CALCULATIONS

Winter Heating Load (for 2084 sqft)

Load component			Load	
Window total	157	sqft	5054	Btuh
Wall total	1972	sqft	4824	Btuh
Door total	63	sqft	1259	Btuh
Ceiling total	2084	sqft	1444	Btuh
Floor total	274	sqft	11963	Btuh
Infiltration	31	cfm	1238	Btuh
Duct loss			3836	Btuh
Subtotal			**29618**	**Btuh**
Ventilation	0	cfm	0	Btuh
TOTAL HEAT LOSS			**29618**	**Btuh**

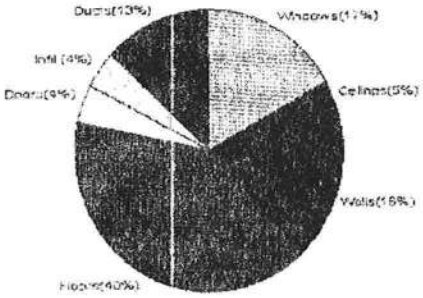

SUMMER CALCULATIONS

Summer Cooling Load (for 2084 sqft)

Load component			Load	
Window total	157	sqft	6586	Btuh
Wall total	1972	sqft	2256	Btuh
Door total	63	sqft	953	Btuh
Ceiling total	2084	sqft	2810	Btuh
Floor total			0	Btuh
Infiltration	17	cfm	310	Btuh
Internal gain			9150	Btuh
Duct gain			7104	Btuh
Sens. Ventilation	0	cfm	0	Btuh
Total sensible gain			**29169**	**Btuh**
Latent gain(ducts)			1476	Btuh
Latent gain(infiltration)			609	Btuh
Latent gain(ventilation)			0	Btuh
Latent gain(internal/occupants/other)			1850	Btuh
Total latent gain			**3935**	**Btuh**
TOTAL HEAT GAIN			**33103**	**Btuh**

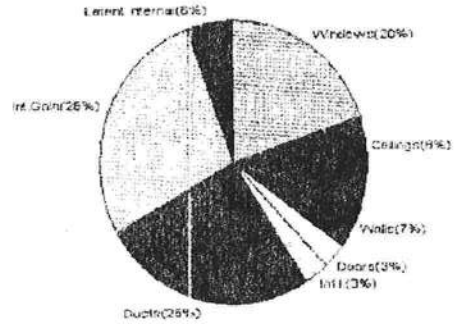

Version 8
For Florida residences only

EnergyGauge® System Sizing
PREPARED BY: Gary Gill
DATE: 6/1/07

25895

Cal-Tech Testing, Inc.
• Engineering
• Geotechnical
• Environmental
Laboratories

P.O. Box 1625 • Lake City, FL 32056-1625 • Tel(386)755-3633 • Fax(386)752-5468
4784 Rossville St., Jacksonville, FL 32254 • Tel(904)381-8801 • Fax(904)381-8802
2230 Greensboro Hwy • Quincy, FL 32351 • Tel(850)442-3495 • Fax(850)442-4008

REPORT OF IN-PLACE DENSITY TEST

JOB NO.: 07-294
DATE TESTED: 6/12/07
DATE REPORTED: 6/13/07

PROJECT:	Lee Blatter Residence, Lake City, FL
CLIENT:	Lee Blatter 187 SW Velme Glen, Lake City, FL 32024
GENERAL CONTRACTOR:	Lee Blatter
EARTHWORK CONTRACTOR:	Lee Blatter
INSPECTOR:	Pam Geiger

ASTM METHOD	SOIL USE
(D-2922) Nuclear	BUILDING FILL

SPECIFICATION REQUIREMENTS: 95%

TEST NO.	TEST LOCATION	TEST DEPTH	WET DENSITY (lb/ft³)	MOISTURE PERCENT	DRY DENSITY (lb/ft³)	PROCTOR TEST NO.	PROCTOR VALUE	% MAXIMUM DENSITY
1	12' East x 22' South of NW Corner	12"	117.1	10.4	106.1	1	104.0	102%
2	Garage Pad - Approx. Center	12"	113.8	8.8	104.6	1	104.0	101%
3	10' West x 12' north of SE Corner	12"	119.1	9.9	108.4	1	104.0	104%
4	18' West x 30' S of NE Corner	12"	115.8	10.3	105.0	1	104.0	101%

REMARKS: The Above Tests Meet Specification Requirements.

PROCTORS

PROCTOR NO.	SOIL DESCRIPTION	MAXIMUM DRY UNIT WEIGHT (lb/ft³)	OPT. MOIST.	TYPE
1	Tan/Grey Silt/ Fine Sand	104.0	10.9	MODIFIED (ASTM D-1557)

Respectfully Submitted,
CAL-TECH TESTING, INC.

Reviewed By:

PENDING ENGINEER SIGNATURE

Linda M. Creamer
President - CEO

Date:
Florida Registration No: 52210

The test results presented in this report are specific only to the samples tested at the time of testing. The tests were performed in accordance with generally accepted methods and standards. Since material conditions can vary between test locations and change with time, sound judgement should be exercised with regard to the use and interpretation of the data.

September 4, 2007

TO: Columbia County Building & Zoning Dept.

FROM: Lee Blatter

RE: Permit # 25895 building modification request.

I request that all the previous building approvals applicable to the above stated permit become null and void and that the newly submitted plans be substituted and approved for the construction of my house.

Sincerely,

C. Lee Blatter

C. Lee Blatter

Approved by:

_____

#25835

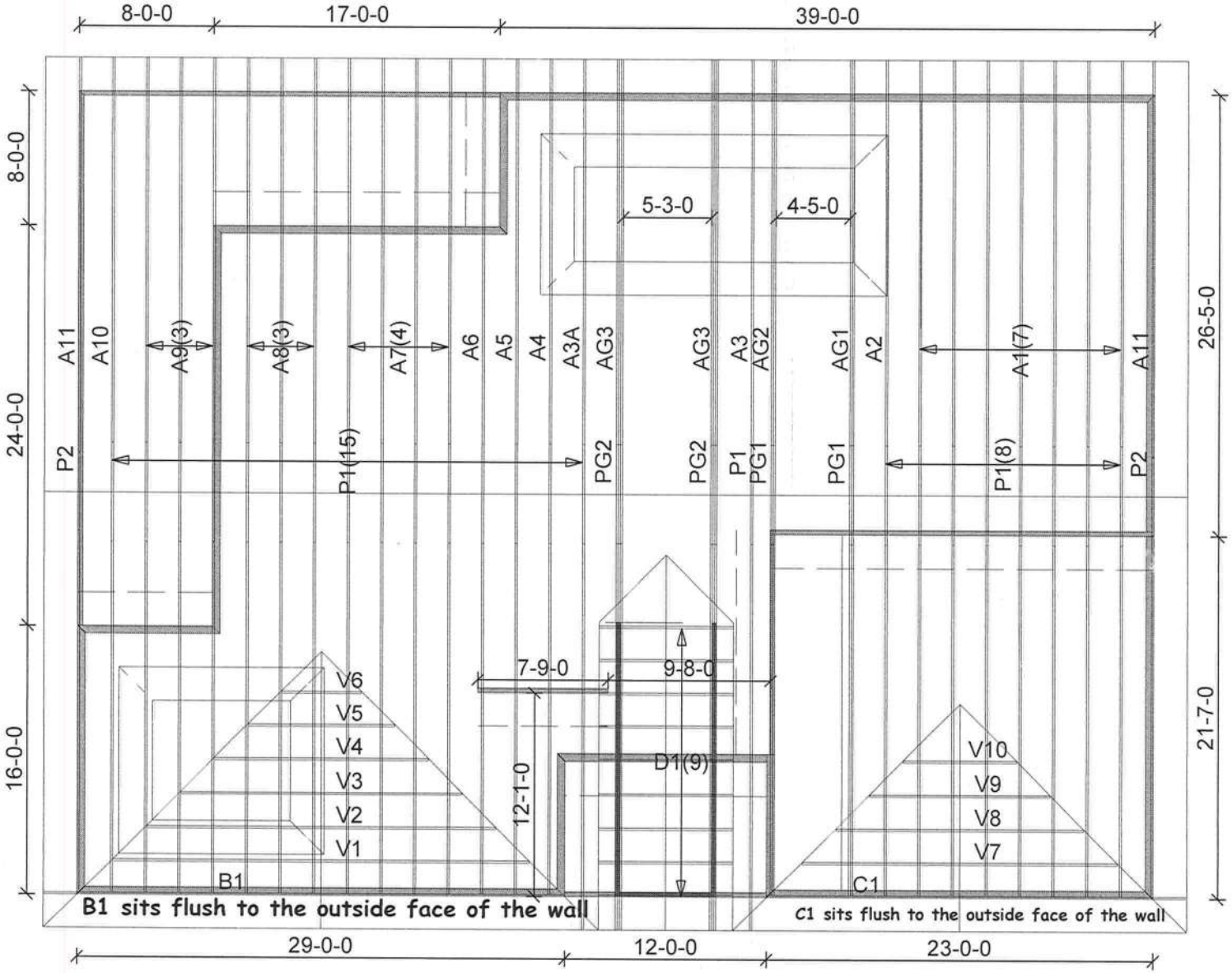

6/12 pitch - 24" OH - All gables dropped for 2x4 outlooker

Mayo Truss Co. Inc.
845 East US 27
MAYO, FL 32066
(386)294-3988
(877)-558-6262

LEE & ANGIE BLATTER

NEW RESIDENCE

110 MPH ASCE WIND LOAD

Roof Loading
TC Live: 20.00 psf
TC Dead: 10.00 psf
BC Live: 0.00 psf
BC Dead: 10.00 psf
TC Stress Inc: 25.00
BC Stress Inc: 25.00
Spacing: 2- 0- 0 o.c.

Account: INDIVIDUAL
Job: LEEBLATTER
Designer: M.MURRAY
Checker: M.MURRAY
Date: 09-14-07

Robbins Engineering, Inc.

RE: LEEBLATTER -

Site Information:
Project Customer: LEE BLATTER Project Name: LEE & ANGIE BLATTER
Lot/Block: LEEBLATTER Subdivision: -
Address: -
City: COLUMBIA COUNTY State: FL

Name Address and License # of Structural Engineer of Record, If there is one, for the building.
Name:
Address: License #:
City:
State:

General Truss Engineering Criteria & Design Loads (Individual Truss Design Drawings Show Special Loading Conditions):
Design Code: FBC2004/TPI2002
Wind Code: ASCE 7-02 Wind Speed: 110 mph Design Program: Robbins OnLine Plus 21.0.060□
Roof Load: 40.0 psf Floor Load: N/A psf

This package includes 32 individual, dated Truss Design Drawings and 0 Additional Drawings.
With my seal affixed to this sheet, I hereby certify that I am the Truss Design Engineer and this index sheet conforms to 61G15-31.003, section 5 of the Florida Board of Professional Engineers Rules.

No.	Seal#	Truss Name	Date	No.	Seal#	Truss Name	Date
1	T2668814	A1	9/7/07	18	T2668831	D1	9/7/07
2	T2668815	A2	9/7/07	19	T2668832	P1	9/7/07
3	T2668816	A3	9/7/07	20	T2668833	P2	9/7/07
4	T2668817	A3A	9/7/07	21	T2668834	PG1	9/7/07
5	T2668818	A4	9/7/07	22	T2668835	PG2	9/7/07
6	T2668819	A5	9/7/07	23	T2668836	V1	9/7/07
7	T2668820	A6	9/7/07	24	T2668837	V2	9/7/07
8	T2668821	A7	9/7/07	25	T2668838	V3	9/7/07
9	T2668822	A8	9/7/07	26	T2668839	V4	9/7/07
10	T2668823	A9	9/7/07	27	T2668840	V5	9/7/07
11	T2668824	A10	9/7/07	28	T2668841	V6	9/7/07
12	T2668825	A11	9/7/07	29	T2668842	V7	9/7/07
13	T2668826	AG1	9/7/07	30	T2668843	V8	9/7/07
14	T2668827	AG2	9/7/07	31	T2668844	V9	9/7/07
15	T2668828	AG3	9/7/07	32	T2668845	V10	9/7/07
16	T2668829	B1	9/7/07				
17	T2668830	C1	9/7/07				

The truss drawing(s) referenced above have been prepared by Robbins Engineering, Inc. under my direct supervision based on the parameters provided by Mayo Truss Company, Inc..

Truss Design Engineer's Name: ORegan, Philip
My license renewal date for the state of Florida is February 28, 2009.

NOTE: The seal on these drawings indicate acceptance of professional engineering responsibility solely for the truss components shown. The suitability and use of this component for any particular building is the responsibility of the building designer, per ANSI/TPI-1 Sec. 2.

Philip J. O'Regan, FL Lic. #58126
Robbins Engineering
6904 Parke East Blvd
Tampa, FL, 33610
FL Cert.#5555

ORegan, Philip September 7,2007

6904 Parke East Boulevard
Tampa, FL 33610-4115
Phone: 813-972-1135• Fax: 813-971-6117
www.robbinseng.com

DALLAS • TAMPA • FT. WORTH

Job	Mark	Quan	Type	Span	P1-H1	Left OH	Right OH	Engineering
LEEBLATTER	A1	7	HIPP	471008	6	0	2- 0- 0	T2668814

LEE & ANGIE BLATTER

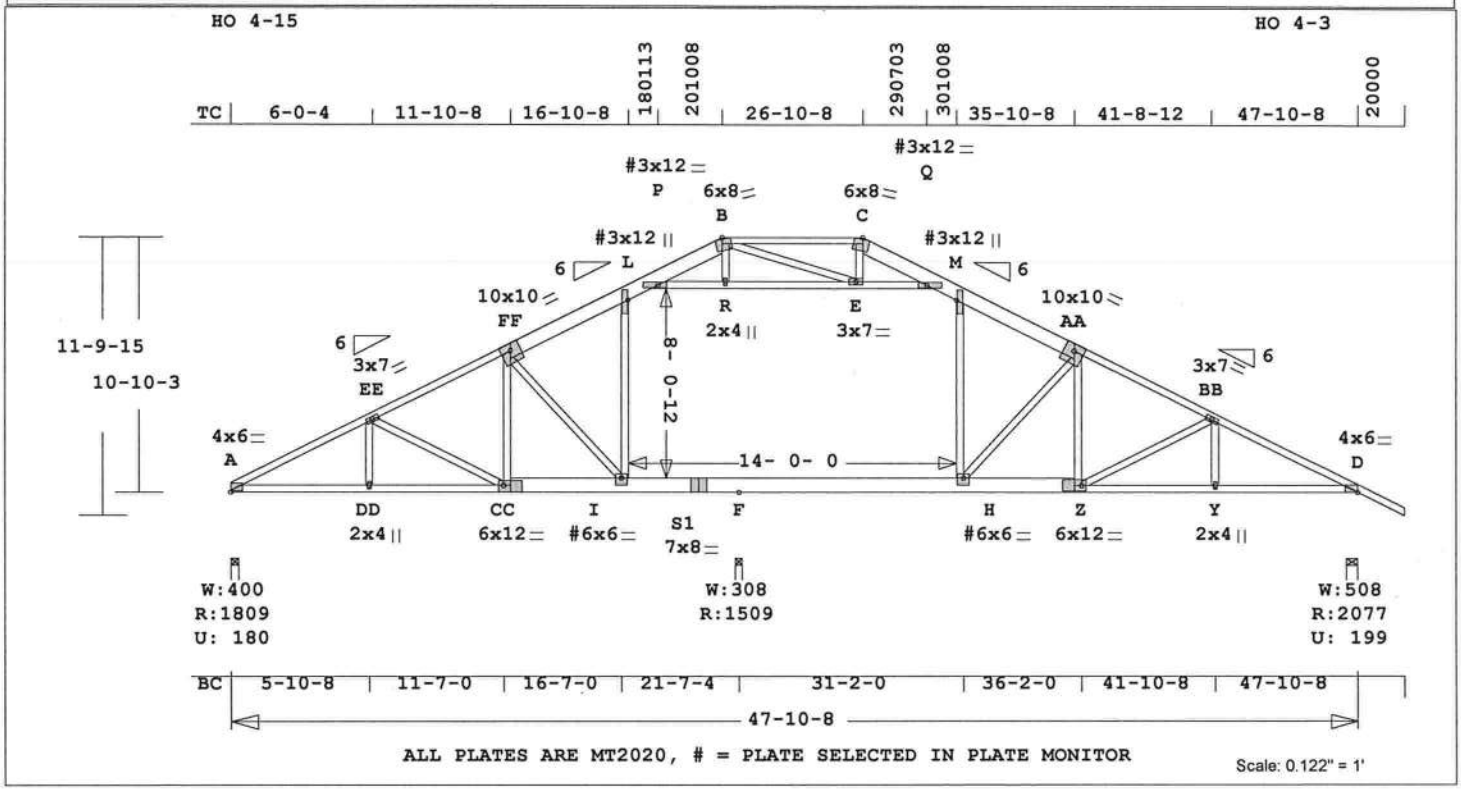

Robbins Engineering, Inc./Online Plus™ APPROX. TRUSS WEIGHT: 430.5 LBS

Online Plus -- Version 21.0.060
RUN DATE: 06-SEP-07

	CSI	-Size-	----Lumber----
TC	0.96	2x 8	SP-#2
--	0.63	2x 4	SP-#2
	A -FF	B -C	AA-D
BC	0.97	2x 4	SP-#2
--	0.84	2x 8	SP-SS
	CC-S1	S1-Z	
WB	0.71	2x 4	SP-#2
ACT	0.21	2x 4	SP-#2
AWT	0.14	2x 4	SP-#2

Brace truss as follows:

	O.C.	From	To
TC	Cont.	0- 0- 0	47-10- 8
BC	Cont.	0- 0- 0	47-10- 8

psf-Ld	Dead	Live
TC	10.0	20.0
BC	10.0	0.0
TC+BC	20.0	20.0
Total	40.0	Spacing 24.0"

Lumber Duration Factor 1.00
Plate Duration Factor 1.00
TC Fb=1.15 Fc=1.10 Ft=1.10
BC Fb=1.10 Fc=1.10 Ft=1.10

Total Load Reactions (Lbs)

Jt	Down	Uplift	Horiz-
A	1810	181 U	231 R
F	1509		
D	2078	199 U	231 R

Jt	Brg Size	Required
A	4.0"	2.1"
F	3.5"	1.6"
D	5.5"	2.5"

LC# 1 Attic Loading
Dur Fctrs - Lbr 1.00 Plt 1.00

plf -	Dead	Live*	From	To
TC V	20	40	0.0'	47.9'
BC V	20	0	0.0'	47.9'
TC V	10	0	16.9'	17.9'
TC V	10	0	29.9'	30.9'
BC V	10	80	16.9'	30.9'
MA V	10	0	18.2'	29.6'
MA V	10	0	0.3'	8.1'
MA V	10	0	0.3'	8.1'

Plus 9 Wind Load Case(s)

Plus 2 Unbalanced Load Cases
Plus 1 UBC LL Load Case(s)

Membr	CSI	P Lbs		Axl-CSI-Bnd	
----------Top Chords----------					
A -EE	0.58	3345	C	0.12	0.46
EE-FF	0.53	3003	C	0.16	0.37
FF-L	0.56	2610	C	0.01	0.55
L -P	0.85	2382	C	0.01	0.84
P -B	0.84	617	C	0.00	0.84
B -C	0.33	786	C	0.00	0.33
C -Q	0.55	771	C	0.00	0.55
Q -M	0.96	2286	C	0.01	0.95
M -AA	0.96	2748	C	0.01	0.95
AA-BB	0.63	3347	C	0.10	0.53
BB-D	0.47	3710	C	0.15	0.32
--------Bottom Chords---------					
A -DD	0.97	2979	T	0.62	0.35
DD-CC	0.79	2980	T	0.62	0.17
CC-I	0.45	2706	T	0.13	0.32
I -S1	0.48	2374	T	0.14	0.34
S1-F	0.84	2374	T	0.15	0.69
F -H	0.84	2374	T	0.15	0.69
H -Z	0.53	3016	T	0.18	0.35
Z -Y	0.90	3312	T	0.69	0.21
Y -D	0.87	3312	T	0.69	0.18
----------Webs----------					
DD-EE	0.02	159	T		
EE-CC	0.17	332	C		
CC-FF	0.09	419	T		
FF-I	0.47	727	C		
I -L	0.07	424	T		
H -M	0.21	949	T		
H -AA	0.71	1089	C		
Z -AA	0.11	488	T		
Z -BB	0.17	330	C		
Y -BB	0.02	169	T		
------Attic Chords (Top)------					
P -R	0.21	2012	C	0.21	0.00
R -E	0.15	2017	C	0.04	0.11
E -Q	0.17	1662	C	0.17	0.00
-------Attic Webs (Top)-------					
R -B	0.01	66	T		
B -E	0.14	632	T		
E -C	0.01	144	C		

TL Defl -0.90" in H -Z L/341
LL Defl -0.61" in F -H L/501
Shear // Grain in F -H 0.63

Plates for each ply each face.
Plate - MT20 20 Ga, Gross Area
Plate - MT2H 20 Ga, Gross Area

Jt	Type	Plt Size	X	Y	JSI
A	MT20	4.0x 6.0	0.5	0.3	0.92
EE	MT20	3.0x 7.0	Ctr	Ctr	0.44
FF	MT20	10.0x10.0	0.7-1.3		0.75
L#	MT20	3.0x12.0	Ctr	Ctr	0.35
P#	MT20	3.0x12.0	-1.6	Ctr	0.37
B	MT20	6.0x 8.0	0.9-3.8		0.91
C	MT20	6.0x 8.0	-0.9-3.8		0.75
Q#	MT20	3.0x12.0	1.6	Ctr	0.35
M#	MT20	3.0x12.0	Ctr	Ctr	0.35
AA	MT20	10.0x10.0	-0.7-1.3		0.75
BB	MT20	3.0x 7.0	Ctr	Ctr	0.44
D	MT20	4.0x 6.0	Ctr	0.1	0.99
DD	MT20	2.0x 4.0	Ctr	Ctr	0.52
CC	MT20	6.0x12.0	Ctr	-0.5	0.75
I#	MT20	6.0x 6.0	Ctr	-0.6	0.46
S1	MT20	7.0x 8.0	Ctr	Ctr	1.00
H#	MT20	6.0x 6.0	Ctr	-0.6	0.46
Z	MT20	6.0x12.0	Ctr	Ctr	0.87
Y	MT20	2.0x 4.0	Ctr	Ctr	0.52
R	MT20	2.0x 4.0	Ctr	Ctr	0.52
E	MT20	3.0x 7.0	Ctr	Ctr	0.92

= Plate Monitor used

REVIEWED BY:
Robbins Engineering, Inc.
6904 Parke East Blvd.
Tampa, FL 33610

REFER TO ROBBINS ENG. GENERAL NOTES AND SYMBOLS SHEET FOR ADDITIONAL SPECIFICATIONS.

NOTES:
Trusses Manufactured by:
Mayo Truss Co. Inc.
Analysis Conforms To:
FBC2004
OH Loading
Soffit psf 2.0
Design checked for 10 psf non-concurrent LL on BC.
NOTE: USER MODIFIED PLATES
This design may have plates selected through a plate monitor.
Wind Loads - ANSI / ASCE 7-02
Truss is designed as
Components and Claddings*
for Exterior zone location.
Wind Speed: 110 mph
Mean Roof Height: 15-0
Exposure Category: B

Occupancy Factor : 1.00
Building Type: Enclosed
TC Dead Load: 5.0 psf
BC Dead Load: 5.0 psf
Unbalanced Loads Checked
Load Factors = 1.00 and 0.00
Max comp. force 3710 Lbs
Max tens. force 3312 Lbs
Quality Control Factor 1.25

Philip J. O'Regan, FL Lic. #58126
Robbins Engineering
6904 Parke East Blvd
Tampa, FL, 33610
FL Cert.#5555

Job	Mark	Quan	Type	Span	P1-H1	Left OH	Right OH	Engineering
LEEBLATTER	*A2*	1	SP	471008	6	0	2- 0- 0	*T2668815*

LEE & ANGIE BLATTER

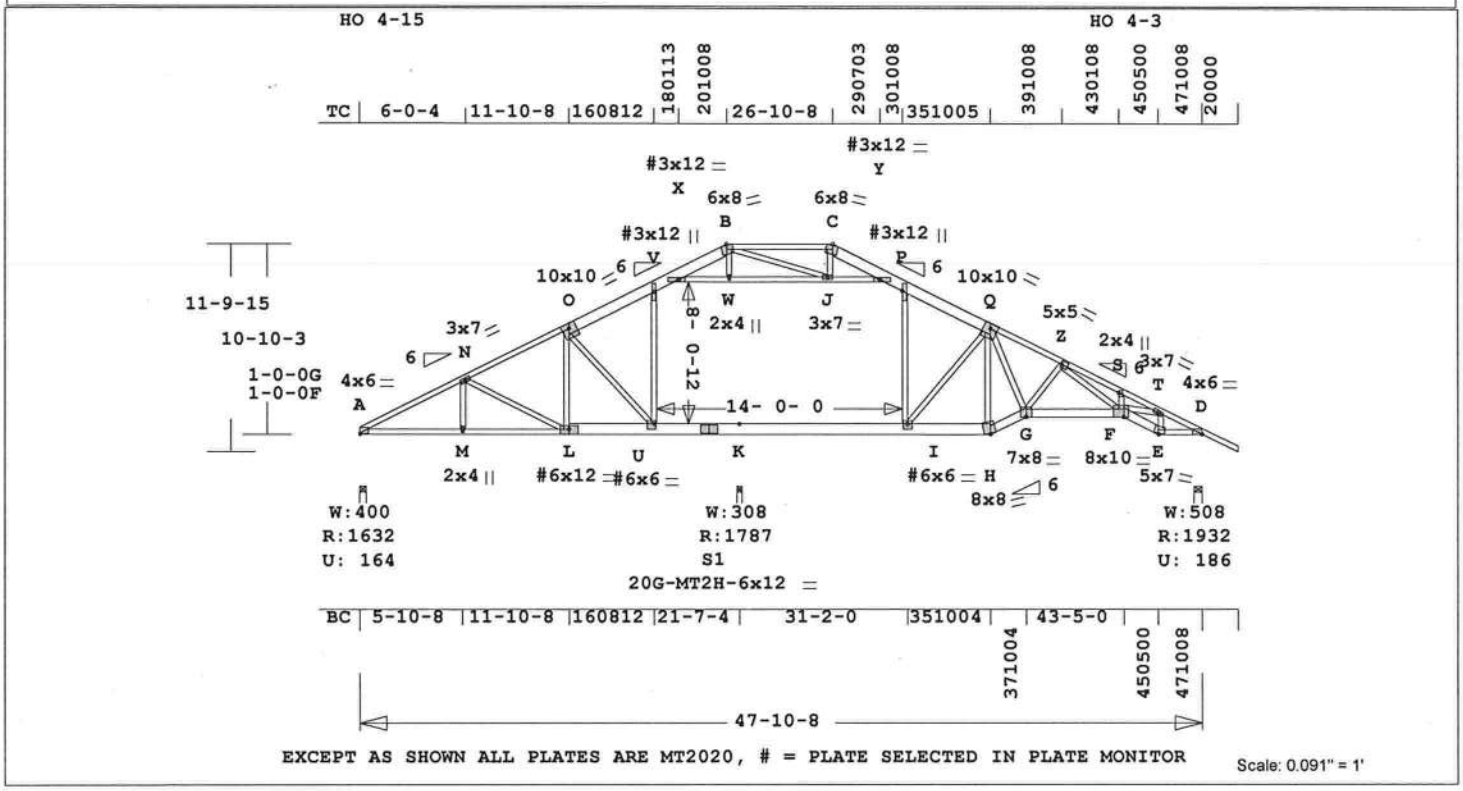

EXCEPT AS SHOWN ALL PLATES ARE MT2020, # = PLATE SELECTED IN PLATE MONITOR

Scale: 0.091" = 1'

Robbins Engineering, Inc./Online Plus™ APPROX. TRUSS WEIGHT: 454.5 LBS

Online Plus -- Version 21.0.060
RUN DATE: 06-SEP-07

	CSI	-Size-	----Lumber----
TC	0.91	2x 4	SP-#1
--	0.51	2x 4	SP-#2
	A -O	B -C	
--	0.83	2x 8	SP-#2
	O -B		
--	0.55	2x 8	SP-2401
	C -Q		
BC	0.96	2x 8	SP-2401
--	0.85	2x 4	SP-#2
	A -L		
--	0.92	2x 6	SP-#2
	H -G	G -F	F -E
--	0.81	2x 4	SP-#1
	E -D		
WB	0.79	2x 4	SP-#2
ACT	0.16	2x 4	SP-#2
AWT	0.16	2x 4	SP-#2

Brace truss as follows:

	O.C.	From	To
TC	Cont.	0- 0- 0	20-10- 8
TC	24.0"	20-10- 8	26-10- 8
TC	Cont.	26-10- 8	47-10- 8
BC	Cont.	0- 0- 0	47-10- 8

psf-Ld	Dead	Live
TC	10.0	20.0
BC	10.0	0.0
TC+BC	20.0	20.0

Total 40.0 Spacing 24.0"
Lumber Duration Factor 1.00
Plate Duration Factor 1.00
TC Fb=1.15 Fc=1.10 Ft=1.10
BC Fb=1.10 Fc=1.10 Ft=1.10

Total Load Reactions (Lbs)

Jt	Down	Uplift	Horiz-
A	1633	165 U	231 R
K	1787		
D	1932	186 U	231 R

Jt	Brg Size	Required
A	4.0"	1.9"
K	3.5"	1.5"
D	5.5"	2.3"

LC# 1 Attic Loading
Dur Fctrs - Lbr 1.00 Plt 1.00

plf -	Dead	Live*	From	To
TC V	20	40	0.0'	47.9'
BC V	20	0	0.0'	47.9'
TC V	10	0	16.9'	17.9'
TC V	10	0	29.9'	30.9'
BC V	10	80	16.9'	30.9'
MA V	10	0	18.2'	29.6'
MA V	10	0	0.3'	8.1'
MA V	10	0	0.3'	8.1'

Plus 9 Wind Load Case(s)
Plus 2 Unbalanced Load Cases
Plus 1 UBC LL Load Case(s)

Membr	CSI	P Lbs		Axl-CSI-Bnd	
----------Top Chords----------					
A -N	0.51	2977	C	0.10	0.41
N -O	0.46	2611	C	0.12	0.34
O -V	0.64	2171	C	0.01	0.63
V -X	0.83	2053	C	0.01	0.82
X -B	0.82	631	C	0.00	0.82
B -C	0.33	926	C	0.00	0.33
C -Y	0.39	885	C	0.00	0.39
Y -P	0.55	1934	C	0.00	0.55
P -Q	0.55	2338	C	0.00	0.55
Q -Z	0.36	3881	C	0.11	0.25
Z -S	0.91	6799	C	0.47	0.44
S -T	0.80	6871	C	0.43	0.37
T -D	0.36	3636	C	0.11	0.25
--------Bottom Chords---------					
A -M	0.85	2654	T	0.55	0.30
M -L	0.74	2654	T	0.55	0.19
L -U	0.37	2352	T	0.08	0.29
U -S1	0.48	1994	T	0.07	0.41
S1-K	0.96	1994	T	0.08	0.88
K -I	0.96	1994	T	0.08	0.88
I -H	0.61	2693	T	0.11	0.50
H -G	0.66	2908	T	0.44	0.22
G -F	0.72	3969	T	0.60	0.12
F -E	0.92	3509	T	0.53	0.39
E -D	0.81	3211	T	0.52	0.29
----------Webs----------					
M -N	0.02	168	T		
N -L	0.19	353	C		
L -O	0.10	474	T		
O -U	0.49	749	C		
U -V	0.03	241	T		
I -P	0.19	869	T		
I -Q	0.79	1239	C		
H -Q	0.30	777	C		
Q -G	0.45	1983	T		
G -Z	0.14	774	C		
Z -F	0.63	2734	T		
F -S	0.01	96	T		
F -T	0.67	2908	T		
E -T	0.16	1365	C		
------Attic Chords (Top)------					
X -W	0.16	1585	C	0.16	0.00
W -J	0.13	1590	C	0.10	0.03
J -Y	0.12	1163	C	0.09	0.03
-------Attic Webs (Top)-------					
W -B	0.01	66	T		
B -J	0.16	715	T		
J -C	0.02	170	C		

TL Defl -1.09" in I -H L/282
LL Defl -0.70" in K -I L/439

Hz Disp	LL	DL	TL
Jt D	0.16"	0.12"	0.29"
Shear // Grain	in K -I		0.67

Plates for each ply each face.
Plate - MT20 20 Ga, Gross Area
Plate - MT2H 20 Ga, Gross Area

Jt	Type	Plt Size	X	Y	JSI
A	MT20	4.0x 6.0	0.5	0.3	0.89
N	MT20	3.0x 7.0	Ctr	Ctr	0.44
O	MT20	10.0x10.0	0.7-1.3		0.75
V#	MT20	3.0x12.0	Ctr	Ctr	0.35
X#	MT20	3.0x12.0	-1.6	Ctr	0.35
B	MT20	6.0x 8.0	0.9-3.8		0.91
C	MT20	6.0x 8.0	-0.9-3.8		0.75
Y#	MT20	3.0x12.0	1.6	Ctr	0.35
P#	MT20	3.0x12.0	Ctr	Ctr	0.35
Q	MT20	10.0x10.0	-0.7-1.3		0.75
Z	MT20	5.0x 5.0	Ctr	Ctr	0.98
S	MT20	2.0x 4.0	Ctr	Ctr	0.52
T	MT20	3.0x 7.0	-0.4	0.2	0.95
D	MT20	4.0x 6.0	Ctr	0.1	0.97
M	MT20	2.0x 4.0	Ctr	Ctr	0.52
L#	MT20	6.0x12.0	Ctr	-0.5	0.75
U#	MT20	6.0x 6.0	Ctr	-0.6	0.46
S1	MT2H	6.0x12.0	Ctr	Ctr	0.99
I#	MT20	6.0x 6.0	Ctr	-0.6	0.46
H	MT20	8.0x 8.0	-1.1	4.8	0.56
G	MT20	7.0x 8.0	Ctr	-2.0	0.79
F	MT20	8.0x10.0	Ctr	-1.5	0.80
E	MT20	5.0x 7.0	0.8	3.2	0.75
W	MT20	2.0x 4.0	Ctr	Ctr	0.52
J	MT20	3.0x 7.0	Ctr	Ctr	0.92

= Plate Monitor used

REVIEWED BY:
Robbins Engineering, Inc.
6904 Parke East Blvd.
Tampa, FL 33610

REFER TO ROBBINS ENG. GENERAL NOTES AND SYMBOLS SHEET FOR ADDITIONAL SPECIFICATIONS.

NOTES:
Trusses Manufactured by:
Mayo Truss Co. Inc.
Analysis Conforms To:
FBC2004
OH Loading
Soffit psf 2.0
Design checked for 10 psf non-concurrent LL on BC.
NOTE: USER MODIFIED PLATES
This design may have plates selected through a plate monitor.
Wind Loads - ANSI / ASCE 7-02
Truss is designed as
Components and Claddings* for Exterior zone location.
Wind Speed: 110 mph
Mean Roof Height: 15-0
Exposure Category: B

Occupancy Factor : 1.00
Building Type: Enclosed
TC Dead Load: 5.0 psf
BC Dead Load: 5.0 psf
Unbalanced Loads Checked
Load Factors = 1.00 and 0.00
Max comp. force 6871 Lbs
Max tens. force 3969 Lbs
Quality Control Factor 1.25

Philip J. O'Regan, FL Lic. #58126
Robbins Engineering
6904 Parke East Blvd
Tampa, FL, 33610
FL Cert.#5555

Job	Mark	Quan	Type	Span	P1-H1	Left OH	Right OH	Engineering
LEEBLATTER	A3	1	SP	480000	6	2- 0- 0	2- 0- 0	T2668816

LEE & ANGIE BLATTER

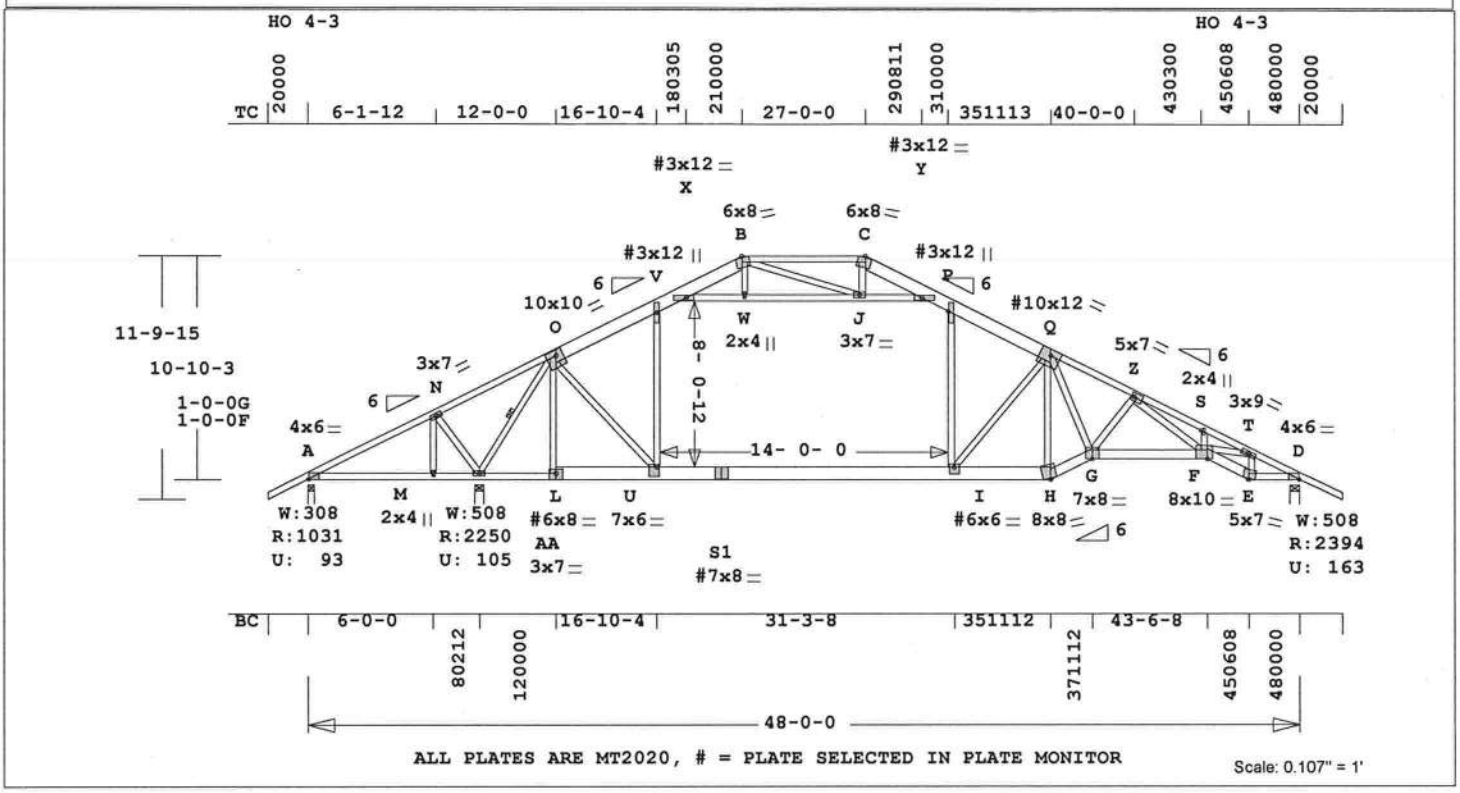

ALL PLATES ARE MT2020, # = PLATE SELECTED IN PLATE MONITOR

Scale: 0.107" = 1'

Robbins Engineering, Inc./Online Plus™ APPROX. TRUSS WEIGHT: 466.5 LBS

```
Online Plus -- Version 21.0.060
RUN DATE: 06-SEP-07

     CSI -Size- ----Lumber----
TC  1.00  2x 4  SP-#1
--  0.35  2x 4  SP-#2
    A -O   B -C
--  0.91  2x 8  SP-#2
    O -B   C -Q
BC  0.95  2x 6  SP-#2
--  0.60  2x 4  SP-#2
    A -L
--  0.91  2x 8  SP-2401
    L -S1  S1-H
--  0.83  2x 4  SP-#1
    E -D
WB  0.69  2x 4  SP-#2
ACT 0.23  2x 4  SP-#2
AWT 0.11  2x 4  SP-#2

Brace truss as follows:
      O.C.      From       To
 TC  Cont.    0- 0- 0 21- 0- 0
 TC   24.0"  21- 0- 0 27- 0- 0
 TC  Cont.   27- 0- 0 48- 0- 0
 BC  Cont.    0- 0- 0 48- 0- 0
One Continuous Lateral Brace
  AA-O
Attach CLB with (2)-10d nails
  at each web.

psf-Ld  Dead  Live
TC      10.0  20.0
BC      10.0   0.0
TC+BC   20.0  20.0
Total   40.0   Spacing  24.0"
Lumber Duration Factor  1.00
Plate  Duration Factor  1.00
TC Fb=1.15  Fc=1.10  Ft=1.10
BC Fb=1.10  Fc=1.10  Ft=1.10

Total Load Reactions (Lbs)
Jt  Down  Uplift  Horiz-
A   1032    93 U   232 R
AA  2250   106 U
D   2394   163 U   232 R

Jt   Brg Size   Required
A       3.5"       1.5"
AA      5.5"       2.5"
D       5.5"       2.8"

LC#  1  NonStandard Loading
Dur Fctrs - Lbr 1.00  Plt 1.00
plf - Dead  Live* From    To
TC V    20     0   0.0'  48.0'
BC V    20     0   0.0'  48.0'
TC V    10     0  17.0'  18.0'
TC V    10     0  30.0'  31.0'
BC V    10    80  17.0'  31.0'
MA V    10     0  18.3'  29.7'
MA V    10     0   0.3'   8.1'
MA V    10     0   0.3'   8.1'

LC#  2  Attic Loading
Dur Fctrs - Lbr 1.25  Plt 1.25
plf - Dead  Live* From    To
TC V    20    40   0.0'  48.0'
BC V    20     0   0.0'  48.0'
TC V    10     0  17.0'  18.0'
TC V    10     0  30.0'  31.0'
BC V    10    80  17.0'  31.0'
MA V    10     0  18.3'  29.7'
MA V    10     0   0.3'   8.1'
MA V    10     0   0.3'   8.1'

Plus  9 Wind Load Case(s)
Plus  2 Unbalanced Load Cases
Plus  1 UBC LL Load Case(s)

Membr  CSI  P Lbs  Axl-CSI-Bnd
----------Top Chords----------
A -N  0.35  1698 C  0.00  0.35
N -O  0.35  1610 C  0.00  0.35
O -V  0.36  3364 C  0.01  0.35
V -X  0.74  3027 C  0.01  0.73
X -B  0.73   520 C  0.00  0.73
B -C  0.27   762 C  0.00  0.27
C -Y  0.43   761 C  0.00  0.43
Y -P  0.91  2885 C  0.01  0.90
P -Q  0.91  3570 C  0.01  0.90
Q -Z  0.35  5170 C  0.14  0.21
Z -S  1.00  8726 C  0.51  0.49
S -T  0.85  8817 C  0.46  0.39
T -D  0.37  4622 C  0.11  0.26
--------Bottom Chords---------
A -M  0.36  1517 T  0.25  0.11
M -AA 0.36  1517 T  0.25  0.11
AA-L  0.60  2139 T  0.35  0.25
L -U  0.88  2149 T  0.07  0.81
U -S1 0.91  3069 T  0.10  0.81
S1-I  0.57  3069 T  0.09  0.48
I -H  0.29  3630 T  0.10  0.19
H -G  0.69  3934 T  0.47  0.22
G -F  0.77  5204 T  0.63  0.14
F -E  0.95  4452 T  0.54  0.41
E -D  0.83  4080 T  0.53  0.30
-------------Webs-------------
M -N  0.02   151 T
N -AA 0.07   415 C
AA-O  0.37  2154 C        1 Br
L -O  0.25   566 C
O -U  0.26  1412 T
U -V  0.14   800 T
I -P  0.26  1477 T
I -Q  0.59   942 C
H -Q  0.57  1513 C
Q -G  0.46  2541 T
G -Z  0.15   891 C
Z -F  0.62  3365 T
F -S  0.01   109 T
F -T  0.69  3772 T
E -T  0.16  1734 C
------Attic Chords (Top)------
X -W  0.23  2813 C  0.23  0.00
W -J  0.16  2818 C  0.05  0.11
J -Y  0.19  2307 C  0.19  0.00
-------Attic Webs (Top)-------
W -B  0.01    70 T
B -J  0.11   649 T
J -C  0.01   150 C

TL Defl  -1.31" in U -I  L/357
LL Defl  -0.81" in U -I  L/577
Hz Disp   LL       DL       TL
  Jt D   0.20"    0.14"    0.34"
Shear // Grain  in Y -P   0.70

Plates for each ply each face.
Plate - MT20 20 Ga, Gross Area
Plate - MT2H 20 Ga, Gross Area
Jt Type  Plt Size  X   Y   JSI
A  MT20  4.0x 6.0 Ctr 0.1 0.81
N  MT20  3.0x 7.0 Ctr Ctr 0.50
O  MT20 10.0x10.0-0.2-1.8 0.83
V# MT20  3.0x12.0 Ctr Ctr 0.35
X# MT20  3.0x12.0-1.6 Ctr 0.52
B  MT20  6.0x 8.0 0.9-3.8 0.91
C  MT20  6.0x 8.0-0.9-3.8 0.75
Y# MT20  3.0x12.0 1.6 Ctr 0.43
P# MT20  3.0x12.0 Ctr Ctr 0.44
Q# MT20 10.0x12.0-0.7-1.3 0.75
Z  MT20  5.0x 7.0 Ctr Ctr 0.86
S  MT20  2.0x 4.0 Ctr Ctr 0.53
T  MT20  3.0x 9.0 Ctr Ctr 0.89
D  MT20  4.0x 6.0 Ctr 0.1 0.98
M  MT20  2.0x 4.0 Ctr Ctr 0.53
AA MT20  3.0x 7.0 Ctr Ctr 0.74
L# MT20  6.0x 8.0 Ctr-0.5 0.75
U  MT20  7.0x 6.0 Ctr-1.9 0.56
S1#MT20  7.0x 8.0 Ctr Ctr 0.47
I# MT20  6.0x 6.0 Ctr-1.0 0.51
H  MT20  8.0x 8.0-1.1 4.8 0.56
G  MT20  7.0x 8.0 Ctr-2.0 0.81
F  MT20  8.0x10.0 Ctr-1.5 0.95
E  MT20  5.0x 7.0 0.8 3.2 0.79
W  MT20  2.0x 4.0 Ctr Ctr 0.53
J  MT20  3.0x 7.0 Ctr Ctr 0.93

# = Plate Monitor used

REVIEWED BY:
 Robbins Engineering, Inc.
 6904 Parke East Blvd.
 Tampa, FL  33610

REFER TO ROBBINS ENG. GENERAL
NOTES AND SYMBOLS SHEET FOR
ADDITIONAL SPECIFICATIONS.
NOTES:
Trusses Manufactured by:
  Mayo Truss Co. Inc.
Analysis Conforms To:
  FBC2004
OH Loading
  Soffit psf 2.0
Design checked for 10 psf non-
  concurrent LL on BC.
NOTE: USER MODIFIED PLATES
  This design may have plates
  selected through a plate
  monitor.
Wind Loads - ANSI / ASCE 7-02
Truss is designed as
  Components and Claddings*
  for Exterior zone location.
  Wind Speed:          110 mph
  Mean Roof Height:  15-0
  Exposure  Category:     B
  Occupancy Factor  : 1.00
  Building Type: Enclosed
  TC Dead Load:          5.0 psf
  BC Dead Load:          5.0 psf
Unbalanced Loads Checked
  Load Factors = 1.00 and 0.00
Max comp. force      8817 Lbs
Max tens. force      5204 Lbs
Quality Control Factor 1.25
```


Philip J. O'Regan, FL Lic. #58126
Robbins Engineering
6904 Parke East Blvd
Tampa, FL, 33610
FL Cert.#5555

Job	Mark	Quan	Type	Span	P1-H1	Left OH	Right OH	Engineering
LEEBLATTER	A3A	1	SP	480000	6	2- 0- 0	2- 0- 0	T2668817

LEE & ANGIE BLATTER

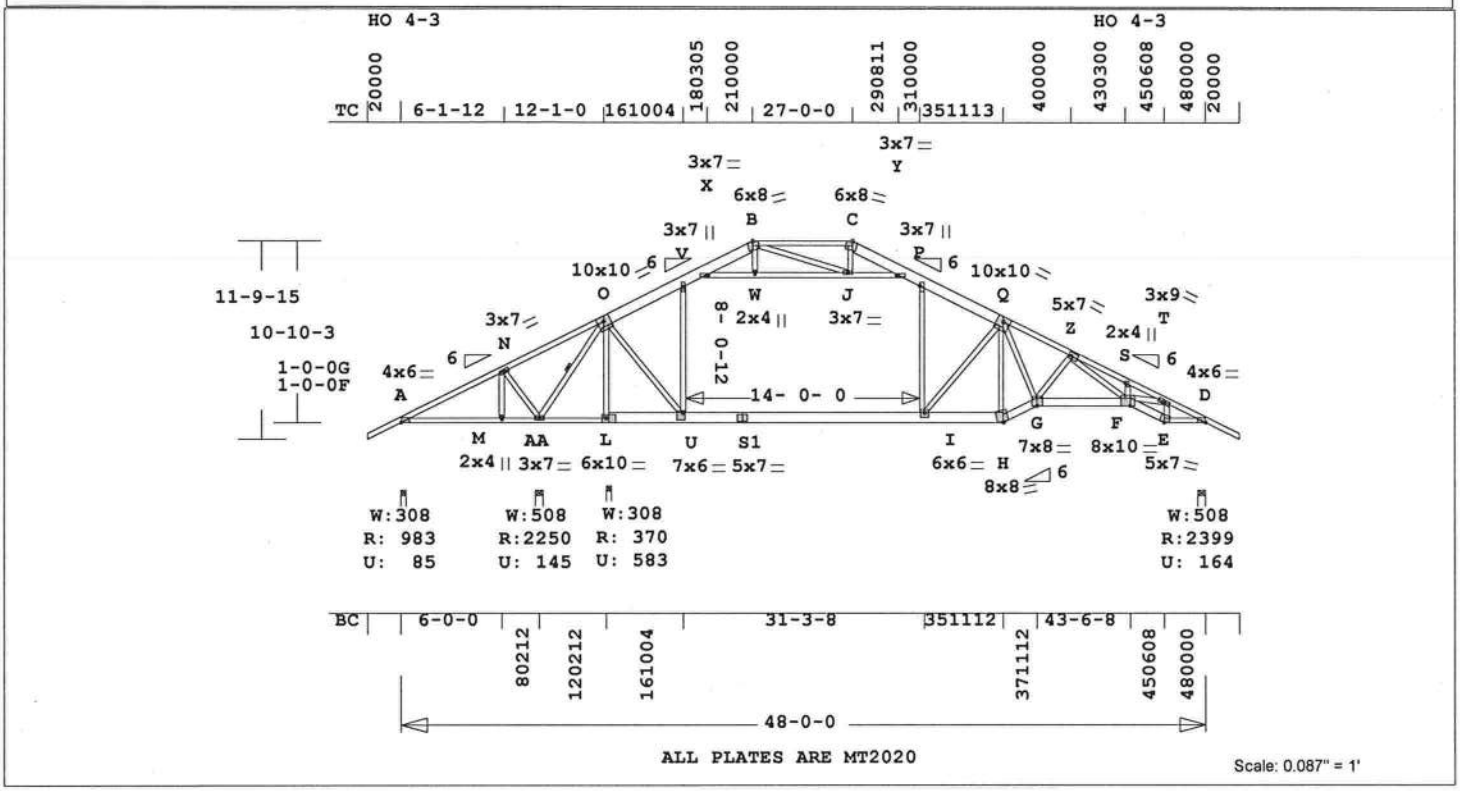

Robbins Engineering, Inc./Online Plus™ APPROX. TRUSS WEIGHT: 465.8 LBS

```
Online Plus -- Version 21.0.060
RUN DATE: 06-SEP-07

     CSI -Size- ----Lumber----
TC  1.00  2x 4  SP-#1
--  0.38  2x 4  SP-#2
    A -O   B -C
--  0.86  2x 8  SP-#2
    O -B   C -Q
BC  0.95  2x 6  SP-#2
--  0.61  2x 4  SP-#2
    A -L
--  0.91  2x 8  SP-2401
    L -S1  S1-H
--  0.83  2x 4  SP-#1
    E -D
WB  0.69  2x 4  SP-#2
ACT 0.23  2x 4  SP-#2
AWT 0.11  2x 4  SP-#2

Brace truss as follows:
      O.C.      From       To
 TC  Cont.    0- 0- 0 21- 0- 0
 TC   24.0"  21- 0- 0 27- 0- 0
 TC  Cont.   27- 0- 0 48- 0- 0
 BC  Cont.    0- 0- 0 48- 0- 0
One Continuous Lateral Brace
  AA-O
Attach CLB with (2)-10d nails
  at each web.

psf-Ld  Dead  Live
TC        10.0  20.0
BC        10.0   0.0
TC+BC     20.0  20.0
Total     40.0   Spacing  24.0"
Lumber Duration Factor  1.00
Plate  Duration Factor  1.00
TC Fb=1.15  Fc=1.10  Ft=1.10
BC Fb=1.10  Fc=1.10  Ft=1.10

Total Load Reactions (Lbs)
Jt  Down  Uplift  Horiz-
A    983    85 U   232 R
AA  2251   145 U
L    371   584 G
D   2399   165 U   232 R
G = Gravity Uplift

Jt   Brg Size   Required
A       3.5"       1.5"
AA      5.5"       2.5"
L       3.5"       1.5"
D       5.5"       2.8"

LC#  1  NonStandard Loading
Dur Fctrs - Lbr 1.00  Plt 1.00
plf - Dead  Live* From    To
TC V    20     0   0.0'  48.0'
BC V    20     0   0.0'  48.0'
TC V    10     0  17.0'  18.0'
TC V    10     0  30.0'  31.0'
BC V    10    80  17.0'  31.0'
MA V    10     0  18.3'  29.7'
MA V    10     0   0.3'   8.1'
MA V    10     0   0.3'   8.1'

LC#  2  Attic Loading
Dur Fctrs - Lbr 1.25  Plt 1.25
plf - Dead  Live* From    To
TC V    20    40   0.0'  48.0'
BC V    20     0   0.0'  48.0'
TC V    10     0  17.0'  18.0'
TC V    10     0  30.0'  31.0'
BC V    10    80  17.0'  31.0'
MA V    10     0  18.3'  29.7'
MA V    10     0   0.3'   8.1'
MA V    10     0   0.3'   8.1'

Plus  9 Wind Load Case(s)
Plus  2 Unbalanced Load Cases
Plus  1 UBC LL Load Case(s)

Membr  CSI  P Lbs  Axl-CSI-Bnd
----------Top Chords----------
A -N  0.37  1385 C  0.01  0.36
N -O  0.38  1248 C  0.05  0.33
O -V  0.33  3381 C  0.01  0.32
V -X  0.71  3039 C  0.01  0.70
X -B  0.70   517 C  0.00  0.70
B -C  0.26   753 C  0.00  0.26
C -Y  0.37   756 C  0.00  0.37
Y -P  0.86  2901 C  0.01  0.85
P -Q  0.86  3585 C  0.01  0.85
Q -Z  0.35  5184 C  0.14  0.21
Z -S  1.00  8747 C  0.51  0.49
S -T  0.86  8839 C  0.46  0.40
T -D  0.37  4633 C  0.11  0.26
--------Bottom Chords---------
A -M  0.31  1247 T  0.20  0.11
M -AA 0.35  1247 T  0.20  0.15
AA-L  0.61  2299 T  0.38  0.23
L -U  0.88  2311 T  0.06  0.82
U -S1 0.91  3085 T  0.09  0.82
S1-I  0.57  3085 T  0.09  0.48
I -H  0.29  3639 T  0.10  0.19
H -G  0.71  3945 T  0.48  0.23
G -F  0.77  5217 T  0.63  0.14
F -E  0.95  4463 T  0.54  0.41
E -D  0.83  4090 T  0.53  0.30
-------------Webs-------------
M -N  0.02   149 T
N -AA 0.07   418 C
AA-O  0.41  2215 C        1 Br
L -O  0.36   849 C
O -U  0.26  1418 T
U -V  0.14   805 T
I -P  0.26  1474 T
I -Q  0.57   904 C
H -Q  0.58  1521 C
Q -G  0.47  2547 T
G -Z  0.15   893 C
Z -F  0.62  3372 T
F -S  0.01   110 T
F -T  0.69  3781 T
E -T  0.16  1738 C
------Attic Chords (Top)------
X -W  0.23  2858 C  0.23  0.00
W -J  0.16  2863 C  0.05  0.11
J -Y  0.19  2331 C  0.19  0.00
-------Attic Webs (Top)-------
W -B  0.01    69 T
B -J  0.11   602 T
J -C  0.01   135 C

TL Defl  -1.28" in U -I  L/328
LL Defl  -0.78" in U -I  L/537
Hz Disp   LL       DL       TL
  Jt D   0.20"    0.14"    0.34"
Shear // Grain  in Y -P   0.70

Plates for each ply each face.
Plate - MT20 20 Ga, Gross Area
Plate - MT2H 20 Ga, Gross Area
Jt Type  Plt Size  X   Y   JSI
A  MT20  4.0x 6.0 Ctr 0.1 0.81
N  MT20  3.0x 7.0 Ctr Ctr 0.50
O  MT20 10.0x10.0 0.7-1.3 0.75
V  MT20  3.0x 7.0 Ctr Ctr 0.35
X  MT20  3.0x 7.0-1.6 Ctr 0.78
B  MT20  6.0x 8.0 0.9-3.8 0.91
C  MT20  6.0x 8.0-0.9-3.8 0.75
Y  MT20  3.0x 7.0 1.6 Ctr 0.64
P  MT20  3.0x 7.0 Ctr Ctr 0.44
Q  MT20 10.0x10.0-0.7-1.3 0.90
Z  MT20  5.0x 7.0 Ctr Ctr 0.86
S  MT20  2.0x 4.0 Ctr Ctr 0.53
T  MT20  3.0x 9.0 Ctr Ctr 0.89
D  MT20  4.0x 6.0 Ctr 0.1 0.99
M  MT20  2.0x 4.0 Ctr Ctr 0.53
AA MT20  3.0x 7.0 Ctr Ctr 0.75
L  MT20  6.0x10.0 Ctr-0.5 0.75
U  MT20  7.0x 6.0 Ctr-1.9 0.61
S1 MT20  5.0x 7.0 Ctr Ctr 0.65
I  MT20  6.0x 6.0 Ctr-0.6 0.46
H  MT20  8.0x 8.0-1.1 4.8 0.56
G  MT20  7.0x 8.0 Ctr-2.0 0.81
F  MT20  8.0x10.0 Ctr-1.5 0.95
E  MT20  5.0x 7.0 0.8 3.2 0.79
W  MT20  2.0x 4.0 Ctr Ctr 0.53
J  MT20  3.0x 7.0 Ctr Ctr 0.93

REVIEWED BY:
 Robbins Engineering, Inc.
 6904 Parke East Blvd.
 Tampa, FL  33610

REFER TO ROBBINS ENG. GENERAL
NOTES AND SYMBOLS SHEET FOR
ADDITIONAL SPECIFICATIONS.
NOTES:
Trusses Manufactured by:
  Mayo Truss Co. Inc.
Analysis Conforms To:
  FBC2004
OH Loading
  Soffit psf 2.0
Design checked for 10 psf non-
  concurrent LL on BC.
Wind Loads - ANSI / ASCE 7-02
Truss is designed as
  Components and Claddings*
  for Exterior zone location.
  Wind Speed:          110 mph
  Mean Roof Height:  15-0
  Exposure  Category:    B
  Occupancy Factor  : 1.00
  Building Type: Enclosed
  TC Dead Load:        5.0 psf
  BC Dead Load:        5.0 psf
Unbalanced Loads Checked
  Load Factors = 1.00 and 0.00
Max comp. force     8839 Lbs
Max tens. force     5217 Lbs
Quality Control Factor 1.25
```

Philip J. O'Regan, FL Lic. #58126
Robbins Engineering
6904 Parke East Blvd
Tampa, FL, 33610
FL Cert.#5555

Job	Mark	Quan	Type	Span	P1-H1	Left OH	Right OH	Engineering
LEEBLATTER	A4	1	SP	471008	6	0	2- 0- 0	T2668818

LEE & ANGIE BLATTER

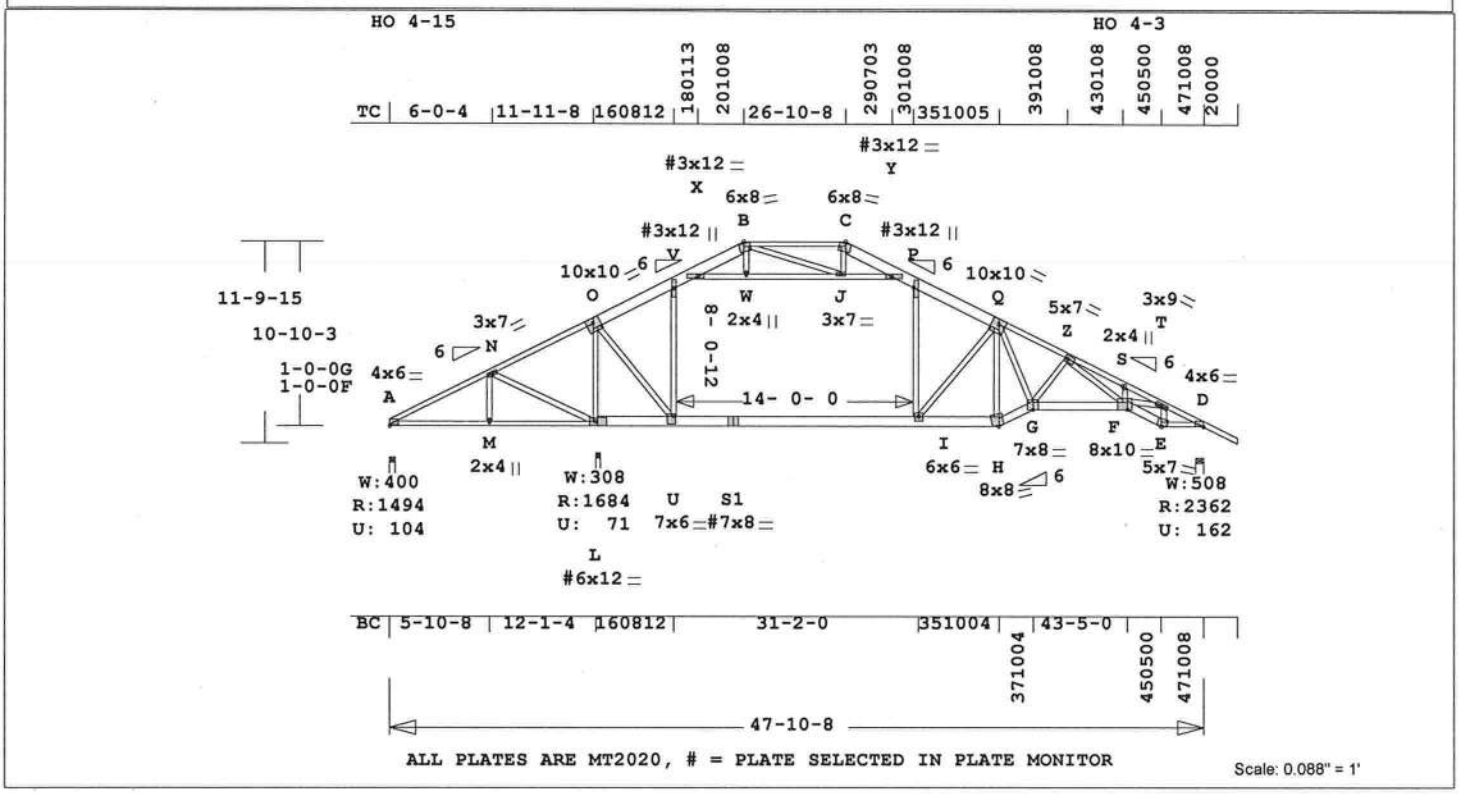

Robbins Engineering, Inc./Online Plus™ APPROX. TRUSS WEIGHT: 453.8 LBS

```
Online Plus -- Version 21.0.060
RUN DATE: 06-SEP-07

     CSI -Size- ----Lumber----
TC  0.98  2x 4  SP-#1
--  0.43  2x 4  SP-#2
    A -N   B -C
--  0.92  2x 8  SP-#2
    O -B   C -Q
BC  0.94  2x 8  SP-2401
--  0.64  2x 4  SP-#2
    A -L
--  0.93  2x 6  SP-#2
    H -G   G -F   F -E
--  0.82  2x 4  SP-#1
    E -D
WB  0.82  2x 4  SP-#2
ACT 0.23  2x 4  SP-#2
AWT 0.12  2x 4  SP-#2

Brace truss as follows:
      O.C.      From       To
 TC  Cont.    0- 0- 0 20-10- 8
 TC   24.0"  20-10- 8 26-10- 8
 TC  Cont.   26-10- 8 47-10- 8
 BC  Cont.    0- 0- 0 47-10- 8

psf-Ld  Dead  Live
TC      10.0  20.0
BC      10.0   0.0
TC+BC   20.0  20.0
Total   40.0   Spacing  24.0"
Lumber Duration Factor  1.00
Plate  Duration Factor  1.00
TC Fb=1.15  Fc=1.10  Ft=1.10
BC Fb=1.10  Fc=1.10  Ft=1.10

Total Load Reactions (Lbs)
Jt  Down  Uplift  Horiz-
A   1495   104 U   231 R
L   1685    71 U
D   2362   163 U   231 R

Jt   Brg Size   Required
A       4.0"       1.8"
L       3.5"       1.5"
D       5.5"       2.8"

LC#  1  NonStandard Loading
Dur Fctrs - Lbr 1.00  Plt 1.00
plf - Dead  Live* From    To
TC V    20     0   0.0'  47.9'
BC V    20     0   0.0'  47.9'
TC V    10     0  16.9'  17.9'
TC V    10     0  29.9'  30.9'
BC V    10    80  16.9'  30.9'
MA V    10     0  18.2'  29.6'
MA V    10     0   0.3'   8.1'
MA V    10     0   0.3'   8.1'

LC#  2  Attic Loading
Dur Fctrs - Lbr 1.25  Plt 1.25
plf - Dead  Live* From    To
TC V    20    40   0.0'  47.9'
BC V    20     0   0.0'  47.9'
TC V    10     0  16.9'  17.9'
TC V    10     0  29.9'  30.9'
BC V    10    80  16.9'  30.9'
MA V    10     0  18.2'  29.6'
MA V    10     0   0.3'   8.1'
MA V    10     0   0.3'   8.1'

Plus  9 Wind Load Case(s)
Plus  2 Unbalanced Load Cases
Plus  1 UBC LL Load Case(s)

Membr  CSI  P Lbs  Axl-CSI-Bnd
----------Top Chords----------
A -N  0.36  2702 C  0.05  0.31
N -O  0.43  2363 C  0.08  0.35
O -V  0.41  3250 C  0.01  0.40
V -X  0.76  2951 C  0.01  0.75
X -B  0.75   506 C  0.00  0.75
B -C  0.26   792 C  0.00  0.26
C -Y  0.44   781 C  0.00  0.44
Y -P  0.92  2796 C  0.01  0.91
P -Q  0.92  3476 C  0.01  0.91
Q -Z  0.35  5080 C  0.13  0.22
Z -S  0.98  8593 C  0.50  0.48
S -T  0.83  8683 C  0.44  0.39
T -D  0.36  4553 C  0.11  0.25
--------Bottom Chords---------
A -M  0.64  2411 T  0.37  0.27
M -L  0.55  2411 T  0.40  0.15
L -U  0.90  2141 T  0.05  0.85
U -S1 0.94  2978 T  0.09  0.85
S1-I  0.58  2978 T  0.09  0.49
I -H  0.26  3566 T  0.10  0.16
H -G  0.69  3865 T  0.47  0.22
G -F  0.76  5118 T  0.62  0.14
F -E  0.93  4388 T  0.53  0.40
E -D  0.82  4020 T  0.53  0.29
-------------Webs-------------
M -N  0.03   195 T
N -L  0.27   461 C
L -O  0.82  1914 C
O -U  0.28  1532 T
U -V  0.12   724 T
I -P  0.26  1467 T
I -Q  0.60   952 C
H -Q  0.55  1457 C
Q -G  0.46  2501 T
G -Z  0.15   881 C
Z -F  0.61  3323 T
F -S  0.01   106 T
F -T  0.68  3713 T
E -T  0.16  1709 C
------Attic Chords  (Top)------
X -W  0.23  2784 C  0.23  0.00
W -J  0.16  2789 C  0.05  0.11
J -Y  0.18  2185 C  0.18  0.00
-------Attic Webs  (Top)-------
W -B  0.01    70 T
B -J  0.12   662 T
J -C  0.01   154 C

TL Defl  -1.35" in U -I  L/312
LL Defl  -0.82" in U -I  L/513
Hz Disp   LL      DL      TL
  Jt D   0.21"   0.14"   0.35"
Shear // Grain  in Y -P   0.68

Plates for each ply each face.
Plate - MT20 20 Ga, Gross Area
Plate - MT2H 20 Ga, Gross Area
Jt Type  Plt Size  X   Y   JSI
A  MT20  4.0x 6.0 0.5 0.3 0.89
N  MT20  3.0x 7.0 Ctr Ctr 0.44
O  MT20 10.0x10.0 0.7-1.3 0.75
V# MT20  3.0x12.0 Ctr Ctr 0.35
X# MT20  3.0x12.0-1.6 Ctr 0.52
B  MT20  6.0x 8.0 0.9-3.8 0.91
C  MT20  6.0x 8.0-0.9-3.8 0.75
Y# MT20  3.0x12.0 1.6 Ctr 0.41
P# MT20  3.0x12.0 Ctr Ctr 0.44
Q  MT20 10.0x10.0-0.7-1.3 0.88
Z  MT20  5.0x 7.0 Ctr Ctr 0.85
S  MT20  2.0x 4.0 Ctr Ctr 0.52
T  MT20  3.0x 9.0 Ctr Ctr 0.87
D  MT20  4.0x 6.0 Ctr 0.1 0.97
M  MT20  2.0x 4.0 Ctr Ctr 0.52
L# MT20  6.0x12.0 Ctr-0.5 0.75
U  MT20  7.0x 6.0 Ctr-1.9 0.66
S1#MT20  7.0x 8.0 Ctr Ctr 0.47
I  MT20  6.0x 6.0 Ctr-0.6 0.46
H  MT20  8.0x 8.0-1.1 4.8 0.56
G  MT20  7.0x 8.0 Ctr-2.0 0.80
F  MT20  8.0x10.0 Ctr-1.5 0.94
E  MT20  5.0x 7.0 0.8 3.2 0.78
W  MT20  2.0x 4.0 Ctr Ctr 0.52
J  MT20  3.0x 7.0 Ctr Ctr 0.92

# = Plate Monitor used

REVIEWED BY:
 Robbins Engineering, Inc.
 6904 Parke East Blvd.
 Tampa, FL  33610

REFER TO ROBBINS ENG. GENERAL
NOTES AND SYMBOLS SHEET FOR
ADDITIONAL SPECIFICATIONS.
NOTES:
Trusses Manufactured by:
  Mayo Truss Co. Inc.
Analysis Conforms To:
  FBC2004
OH Loading
  Soffit psf 2.0
Design checked for 10 psf non-
  concurrent LL on BC.
NOTE: USER MODIFIED PLATES
  This design may have plates
  selected through a plate
  monitor.
Wind Loads - ANSI / ASCE 7-02
Truss is designed as
  Components and Claddings*
  for Exterior zone location.
  Wind Speed:          110 mph
  Mean Roof Height:  15-0
  Exposure  Category:    B
  Occupancy Factor  : 1.00
  Building Type: Enclosed
  TC Dead Load:        5.0 psf
  BC Dead Load:        5.0 psf
Unbalanced Loads Checked
  Load Factors = 1.00 and 0.00
Max comp. force     8683 Lbs
Max tens. force     5118 Lbs
Quality Control Factor 1.25
```


Philip J. O'Regan, FL Lic. #58126
Robbins Engineering
6904 Parke East Blvd
Tampa, FL, 33610
FL Cert.#5555

Job	Mark	Quan	Type	Span	P1-H1	Left OH	Right OH	Engineering
LEEBLATTER	A5	1	HIPP	471008	6	0	2- 0- 0	T2668819

LEE & ANGIE BLATTER

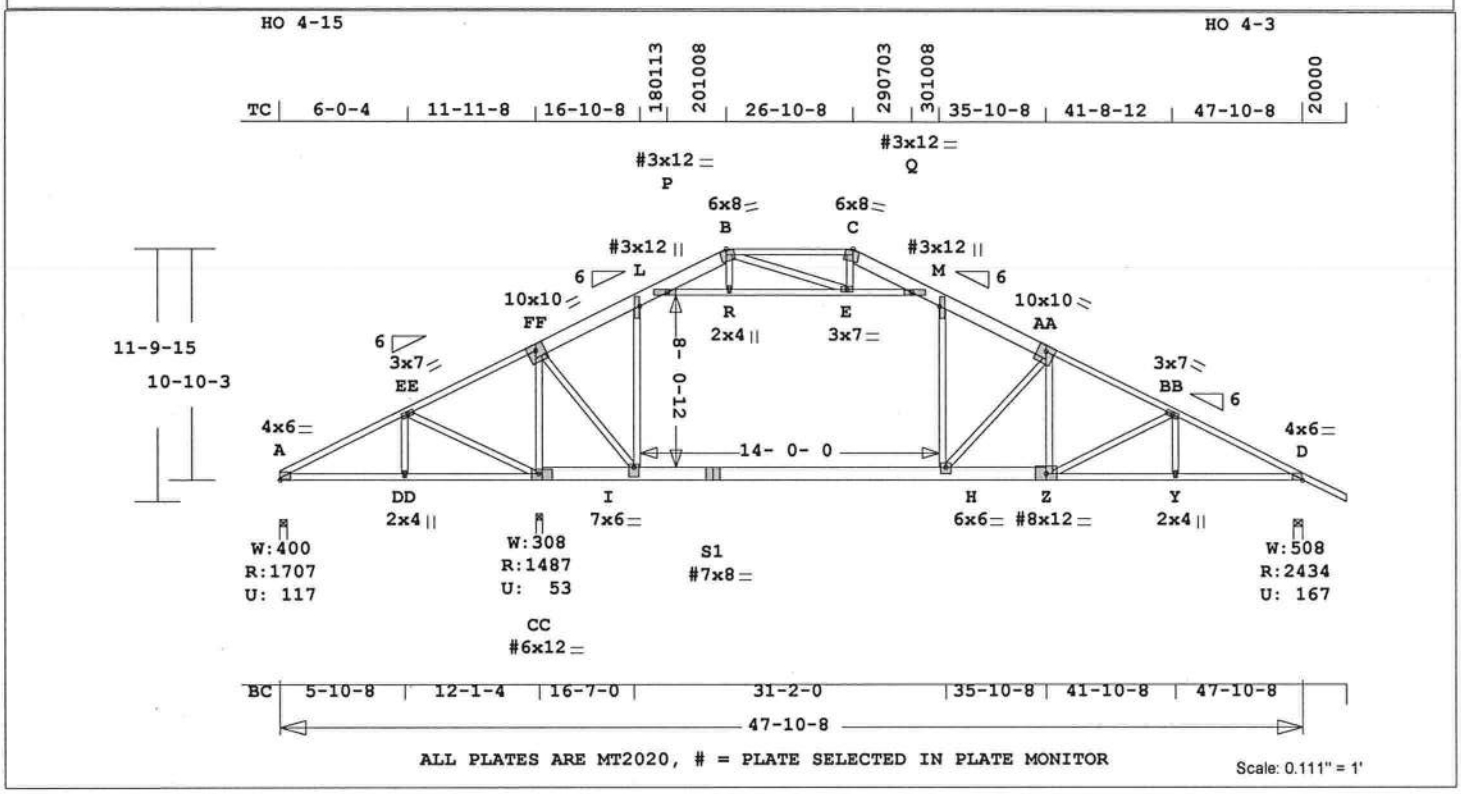

Robbins Engineering, Inc./Online Plus™ APPROX. TRUSS WEIGHT: 429.8 LBS

Online Plus -- Version 21.0.060
RUN DATE: 06-SEP-07

	CSI	-Size-	----Lumber----
TC	0.82	2x 8	SP-#2
--	0.55	2x 4	SP-#2
	A -EE	B -C	AA-D
BC	0.88	2x 8	SP-2401
--	0.85	2x 4	SP-#2
	A -CC	Z -D	
WB	0.72	2x 4	SP-#2
ACT	0.24	2x 4	SP-#2
AWT	0.10	2x 4	SP-#2

Brace truss as follows:

	O.C.	From	To
TC	Cont.	0- 0- 0	20-10- 8
TC	24.0"	20-10- 8	26-10- 8
TC	Cont.	26-10- 8	47-10- 8
BC	Cont.	0- 0- 0	47-10- 8

psf-Ld	Dead	Live
TC	10.0	20.0
BC	10.0	0.0
TC+BC	20.0	20.0
Total	40.0	Spacing 24.0"

Lumber Duration Factor 1.00
Plate Duration Factor 1.00
TC Fb=1.15 Fc=1.10 Ft=1.10
BC Fb=1.10 Fc=1.10 Ft=1.10

Total Load Reactions (Lbs)

Jt	Down	Uplift	Horiz-
A	1708	117 U	231 R
CC	1488	54 U	
D	2434	167 U	231 R

Jt	Brg Size	Required
A	4.0"	2.0"
CC	3.5"	1.5"
D	5.5"	2.9"

LC# 1 NonStandard Loading
Dur Fctrs - Lbr 1.00 Plt 1.00

plf -	Dead	Live*	From	To
TC V	20	0	0.0'	47.9'
BC V	20	0	0.0'	47.9'
TC V	10	0	16.9'	17.9'
TC V	10	0	29.9'	30.9'
BC V	10	80	16.9'	30.9'
MA V	10	0	18.2'	29.6'
MA V	10	0	0.3'	8.1'
MA V	10	0	0.3'	8.1'

LC# 2 Attic Loading
Dur Fctrs - Lbr 1.25 Plt 1.25

plf -	Dead	Live*	From	To
TC V	20	40	0.0'	47.9'
BC V	20	0	0.0'	47.9'
TC V	10	0	16.9'	17.9'
TC V	10	0	29.9'	30.9'
BC V	10	80	16.9'	30.9'
MA V	10	0	18.2'	29.6'
MA V	10	0	0.3'	8.1'
MA V	10	0	0.3'	8.1'

Plus 9 Wind Load Case(s)
Plus 2 Unbalanced Load Cases
Plus 1 UBC LL Load Case(s)

Membr	CSI	P Lbs		Axl-CSI-Bnd	
----------Top Chords----------					
A -EE	0.42	3144	C	0.09	0.33
EE-FF	0.45	2833	C	0.10	0.35
FF-L	0.26	3505	C	0.01	0.25
L -P	0.66	3119	C	0.01	0.65
P -B	0.65	521	C	0.00	0.65
B -C	0.27	717	C	0.00	0.27
C -Q	0.30	730	C	0.00	0.30
Q -M	0.81	2995	C	0.01	0.80
M -AA	0.82	3685	C	0.02	0.80
AA-BB	0.55	4141	C	0.11	0.44
BB-D	0.44	4470	C	0.14	0.30
--------Bottom Chords---------					
A -DD	0.76	2802	T	0.44	0.32
DD-CC	0.62	2802	T	0.47	0.15
CC-I	0.86	2564	T	0.07	0.79
I -S1	0.88	3183	T	0.09	0.79
S1-H	0.57	3183	T	0.09	0.48
H -Z	0.32	3737	T	0.10	0.22
Z -Y	0.79	3989	T	0.66	0.13
Y -D	0.85	3988	T	0.66	0.19
----------Webs----------					
DD-EE	0.02	181	T		
EE-CC	0.25	432	C		
CC-FF	0.72	1688	C		
FF-I	0.23	1280	T		
I -L	0.16	890	T		
H -M	0.26	1470	T		
H -AA	0.55	851	C		
Z -AA	0.07	215	T		
Z -BB	0.15	285	C		
Y -BB	0.02	154	T		
------Attic Chords (Top)------					
P -R	0.24	2946	C	0.24	0.00
R -E	0.16	2951	C	0.05	0.11
E -Q	0.20	2465	C	0.20	0.00
-------Attic Webs (Top)-------					
R -B	0.01	69	T		
B -E	0.10	542	T		
E -C	0.01	117	C		

TL Defl -1.02" in I -H L/415
LL Defl -0.64" in I -H L/662
Shear // Grain in Q -M 0.72

Plates for each ply each face.
Plate - MT20 20 Ga, Gross Area
Plate - MT2H 20 Ga, Gross Area

Jt	Type	Plt Size	X	Y	JSI
A	MT20	4.0x 6.0	0.5	0.3	0.89
EE	MT20	3.0x 7.0	Ctr	Ctr	0.44
FF	MT20	10.0x10.0	0.7-1.3		0.75
L#	MT20	3.0x12.0	Ctr	Ctr	0.35
P#	MT20	3.0x12.0	-1.6	Ctr	0.55
B	MT20	6.0x 8.0	0.9-3.8		0.91
C	MT20	6.0x 8.0	-0.9-3.8		0.75
Q#	MT20	3.0x12.0	1.6	Ctr	0.46
M#	MT20	3.0x12.0	Ctr	Ctr	0.44
AA	MT20	10.0x10.0	-0.7-1.3		0.75
BB	MT20	3.0x 7.0	Ctr	Ctr	0.44
D	MT20	4.0x 6.0	Ctr	0.1	0.95
DD	MT20	2.0x 4.0	Ctr	Ctr	0.52
CC#	MT20	6.0x12.0	Ctr-	0.5	0.75
I	MT20	7.0x 6.0	Ctr-	1.8	0.51
S1#	MT20	7.0x 8.0	Ctr	Ctr	0.47
H	MT20	6.0x 6.0	Ctr-	0.6	0.46
Z#	MT20	8.0x12.0	Ctr	0.5	0.75
Y	MT20	2.0x 4.0	Ctr	Ctr	0.52
R	MT20	2.0x 4.0	Ctr	Ctr	0.52
E	MT20	3.0x 7.0	Ctr	Ctr	0.92

= Plate Monitor used

REVIEWED BY:
Robbins Engineering, Inc.
6904 Parke East Blvd.
Tampa, FL 33610

REFER TO ROBBINS ENG. GENERAL NOTES AND SYMBOLS SHEET FOR ADDITIONAL SPECIFICATIONS.
NOTES:
Trusses Manufactured by:
Mayo Truss Co. Inc.
Analysis Conforms To:
FBC2004
OH Loading
Soffit psf 2.0

Design checked for 10 psf non-concurrent LL on BC.
NOTE: USER MODIFIED PLATES
This design may have plates selected through a plate monitor.
Wind Loads - ANSI / ASCE 7-02
Truss is designed as Components and Claddings* for Exterior zone location.
Wind Speed: 110 mph
Mean Roof Height: 15-0
Exposure Category: B
Occupancy Factor : 1.00
Building Type: Enclosed
TC Dead Load: 5.0 psf
BC Dead Load: 5.0 psf
Unbalanced Loads Checked
Load Factors = 1.00 and 0.00
Max comp. force 4470 Lbs
Max tens. force 3989 Lbs
Quality Control Factor 1.25

Philip J. O'Regan, FL Lic. #58126
Robbins Engineering
6904 Parke East Blvd
Tampa, FL, 33610
FL Cert.#5555

Job	Mark	Quan	Type	Span	P1-H1	Left OH	Right OH	Engineering
LEEBLATTER	A6	1	HIPP	471008	6	0	2- 0- 0	T2668820

LEE & ANGIE BLATTER

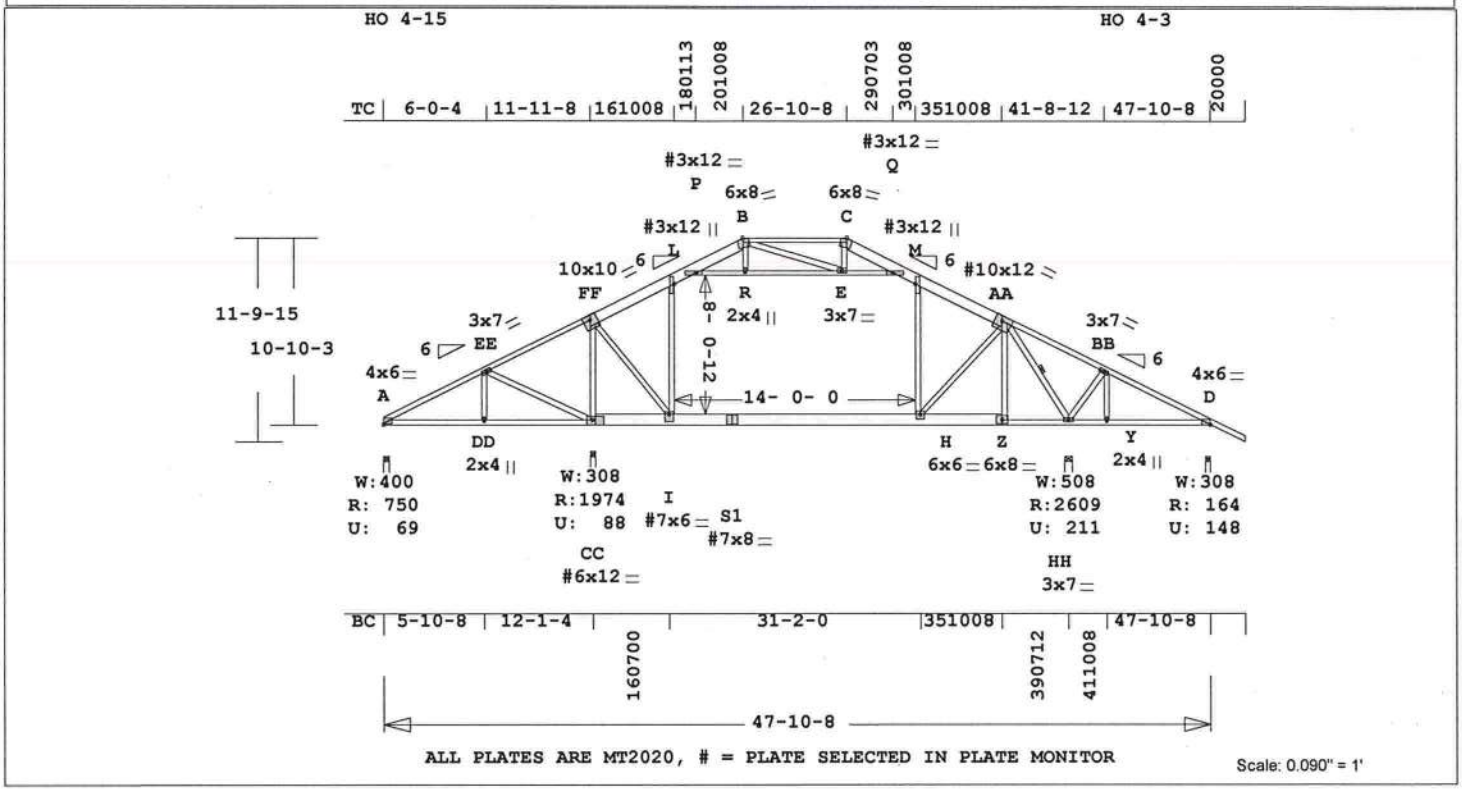

ALL PLATES ARE MT2020, # = PLATE SELECTED IN PLATE MONITOR

Scale: 0.090" = 1'

Robbins Engineering, Inc./Online Plus™ APPROX. TRUSS WEIGHT: 437.0 LBS

```
Online Plus -- Version 21.0.060
RUN DATE: 06-SEP-07

     CSI -Size- ----Lumber----
TC  0.52  2x 4  SP-#2
--  0.16  2x 8  SP-#2
    FF-B   C -AA
BC  0.59  2x 8  SP-2401
--  0.29  2x 4  SP-#2
    A -CC  Z -D
WB  0.84  2x 4  SP-#2
ACT 0.08  2x 4  SP-#2
AWT 0.03  2x 4  SP-#2

Brace truss as follows:
      O.C.      From       To
 TC  Cont.    0- 0- 0 47-10- 8
 BC  Cont.    0- 0- 0 47-10- 8
One Continuous Lateral Brace
  AA-HH
Attach CLB with (2)-10d nails
  at each web.

psf-Ld  Dead  Live
TC      10.0  20.0
BC      10.0   0.0
TC+BC   20.0  20.0
Total   40.0   Spacing  24.0"
Lumber Duration Factor  1.00
Plate  Duration Factor  1.00
TC Fb=1.15  Fc=1.10  Ft=1.10
BC Fb=1.10  Fc=1.10  Ft=1.10

Total Load Reactions (Lbs)
Jt  Down  Uplift  Horiz-
A    751    69 U   231 R
CC  1974    89 U
HH  2610   212 U
D    165   149 U   230 R

Jt   Brg Size   Required
A       4.0"       1.5"
CC      3.5"       1.5"
HH      5.5"       2.9"
D       3.5"       1.5"

LC#  1  NonStandard Loading
Dur Fctrs - Lbr 1.00  Plt 1.00
plf - Dead  Live* From    To
TC V    20     0   0.0'  47.9'
BC V    20     0   0.0'  47.9'
TC V    10     0  16.9'  17.9'
TC V    10     0  29.9'  30.9'
BC V    10    80  16.9'  30.9'
MA V    10     0  18.2'  29.6'
MA V    10     0   0.3'   8.1'
MA V    10     0   0.3'   8.1'

LC#  2  Attic Loading
Dur Fctrs - Lbr 1.25  Plt 1.25
plf - Dead  Live* From    To
TC V    20    40   0.0'  47.9'
BC V    20     0   0.0'  47.9'
TC V    10     0  16.9'  17.9'
TC V    10     0  29.9'  30.9'
BC V    10    80  16.9'  30.9'
MA V    10     0  18.2'  29.6'
MA V    10     0   0.3'   8.1'
MA V    10     0   0.3'   8.1'

Plus  9 Wind Load Case(s)
Plus  2 Unbalanced Load Cases
Plus  1 UBC LL Load Case(s)

Membr  CSI  P Lbs  Axl-CSI-Bnd
----------Top Chords----------
A -EE 0.32  1153 C  0.00  0.32
EE-FF 0.38   714 C  0.03  0.35
FF-L  0.13  1610 C  0.03  0.10
L -P  0.11  1502 C  0.00  0.11
P -B  0.11   708 C  0.00  0.11
B -C  0.26   653 C  0.00  0.26
C -Q  0.07   728 C  0.02  0.05
Q -M  0.16  1487 C  0.00  0.16
M -AA 0.16  1627 C  0.00  0.16
AA-BB 0.52   847 T  0.12  0.40
BB-D  0.50   555 T  0.10  0.40
--------Bottom Chords---------
A -DD 0.29  1035 T  0.10  0.19
DD-CC 0.29  1035 T  0.10  0.19
CC-I  0.56   650 T  0.01  0.55
I -S1 0.59  1436 T  0.04  0.55
S1-H  0.51  1436 T  0.04  0.47
H -Z  0.48   615 T  0.01  0.47
Z -HH 0.22   610 T  0.10  0.12
HH-Y  0.19   480 C  0.00  0.19
Y -D  0.21   480 C  0.00  0.21
-------------Webs-------------
DD-EE 0.03   237 T
EE-CC 0.32   543 C
CC-FF 0.84  1960 C
FF-I  0.27  1465 T
I -L  0.09   362 T
H -M  0.07   425 T
H -AA 0.23  1254 T
Z -AA 0.10   229 C
AA-HH 0.44  2527 C        1 Br
HH-BB 0.09   483 C
Y -BB 0.03   203 T
------Attic Chords (Top)------
P -R  0.08  1012 C  0.08  0.00
R -E  0.07  1017 C  0.00  0.07
E -Q  0.08   974 C  0.08  0.00
-------Attic Webs (Top)-------
R -B  0.01    57 T
B -E  0.03   124 T
E -C  0.01    75 T

TL Defl  -0.52" in I -H  L/630
LL Defl  -0.39" in I -H  L/845
Shear // Grain  in I -S1  0.57

Plates for each ply each face.
Plate - MT20 20 Ga, Gross Area
Plate - MT2H 20 Ga, Gross Area
Jt Type  Plt Size  X   Y   JSI
A  MT20  4.0x 6.0 0.5 0.3 0.89
EE MT20  3.0x 7.0 Ctr Ctr 0.44
FF MT20 10.0x10.0 0.7-1.3 0.75
L# MT20  3.0x12.0 Ctr Ctr 0.35
P# MT20  3.0x12.0-1.6 Ctr 0.35
B  MT20  6.0x 8.0 0.9-3.8 0.91
C  MT20  6.0x 8.0-0.9-3.8 0.75
Q# MT20  3.0x12.0 1.6 Ctr 0.35
M# MT20  3.0x12.0 Ctr Ctr 0.35
AA#MT20 10.0x12.0 0.2-1.8 0.75
BB MT20  3.0x 7.0 Ctr Ctr 0.50
D  MT20  4.0x 6.0 Ctr 0.1 0.81
DD MT20  2.0x 4.0 Ctr Ctr 0.52
CC#MT20  6.0x12.0 Ctr-0.5 0.75
I# MT20  7.0x 6.0 Ctr-1.8 0.56
S1#MT20  7.0x 8.0 Ctr Ctr 0.55
H  MT20  6.0x 6.0 Ctr-0.6 0.46
Z  MT20  6.0x 8.0 Ctr Ctr 0.87
HH MT20  3.0x 7.0 Ctr Ctr 0.86
Y  MT20  2.0x 4.0 Ctr Ctr 0.52
R  MT20  2.0x 4.0 Ctr Ctr 0.52
E  MT20  3.0x 7.0 Ctr Ctr 0.92

# = Plate Monitor used

REVIEWED BY:
 Robbins Engineering, Inc.
 6904 Parke East Blvd.
 Tampa, FL  33610

REFER TO ROBBINS ENG. GENERAL
NOTES AND SYMBOLS SHEET FOR
ADDITIONAL SPECIFICATIONS.
NOTES:
Trusses Manufactured by:
  Mayo Truss Co. Inc.
Analysis Conforms To:
  FBC2004
OH Loading
  Soffit psf 2.0
Design checked for 10 psf non-
  concurrent LL on BC.
NOTE: USER MODIFIED PLATES
  This design may have plates
  selected through a plate
  monitor.
Wind Loads - ANSI / ASCE 7-02
Truss is designed as
  Components and Claddings*
  for Exterior zone location.
  Wind Speed:          110 mph
  Mean Roof Height:  15-0
  Exposure  Category:    B
  Occupancy Factor  : 1.00
  Building Type: Enclosed
  TC Dead Load:        5.0 psf
  BC Dead Load:        5.0 psf

User-defined wind-exposed BC
  regions  --From--   ---To---
           39- 7-12   47-10- 8
Unbalanced Loads Checked
  Load Factors = 1.00 and 0.00
Max comp. force      2527 Lbs
Max tens. force      1465 Lbs
Quality Control Factor 1.25
```


Philip J. O'Regan, FL Lic. #58126
Robbins Engineering
6904 Parke East Blvd
Tampa, FL, 33610
FL Cert.#5555

Job	Mark	Quan	Type	Span	P1-H1	Left OH	Right OH	Engineering
LEEBLATTER	*A7*	4	HIPP	471008	6	0	2- 0- 0	*T2668821*

LEE & ANGIE BLATTER

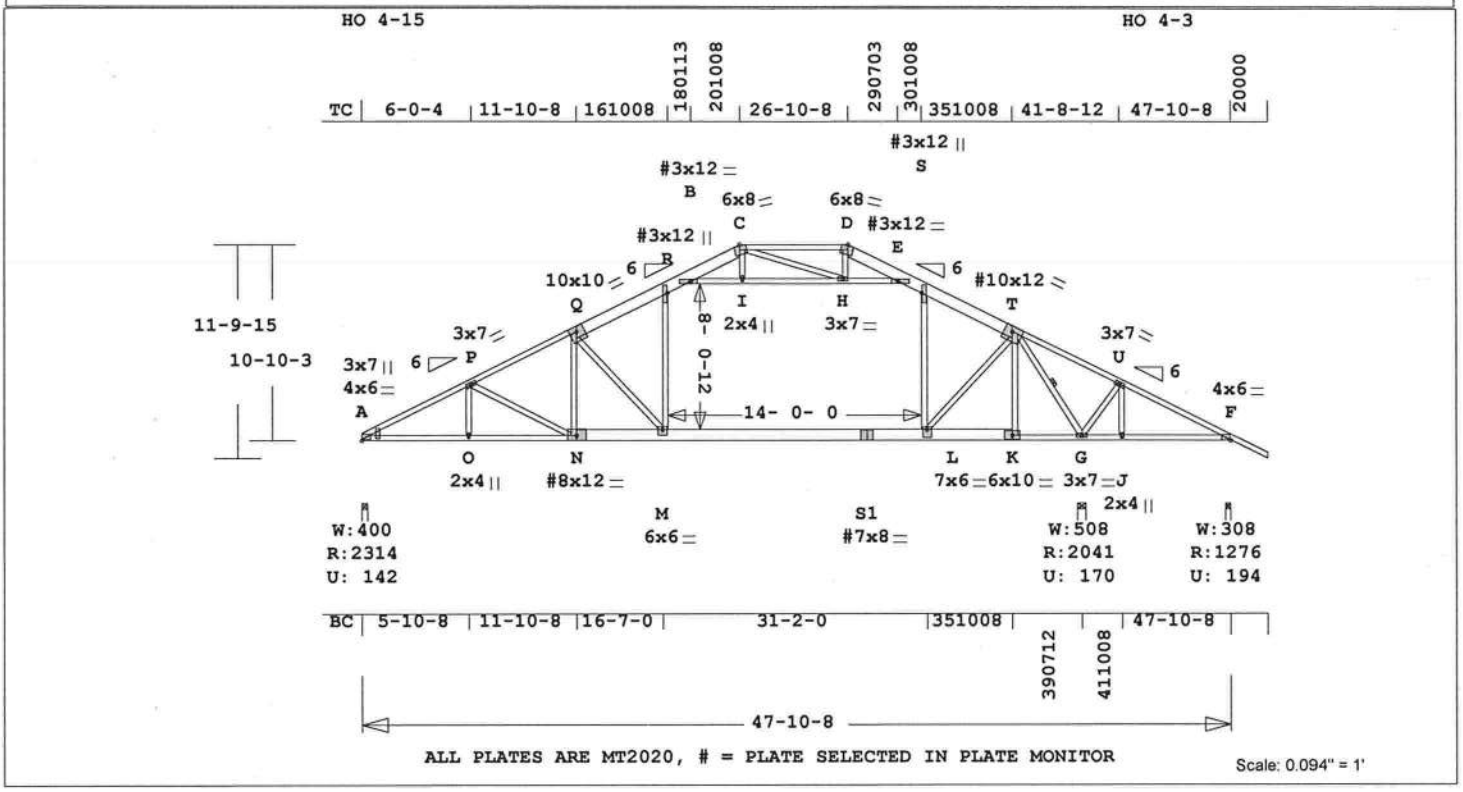

ALL PLATES ARE MT2020, # = PLATE SELECTED IN PLATE MONITOR

Scale: 0.094" = 1'

Robbins Engineering, Inc./Online Plus™ APPROX. TRUSS WEIGHT: 438.9 LBS

Online Plus -- Version 21.0.060
RUN DATE: 06-SEP-07

	CSI	-Size-	----Lumber----
TC	0.85	2x 8	SP-#2
--	0.58	2x 4	SP-#2
	A -Q	C -D	T -F
BC	0.93	2x 4	SP-#2
--	0.85	2x 8	SP-2401
	N -S1	S1-K	
WB	0.55	2x 4	SP-#2
ACT	0.24	2x 4	SP-#2
AWT	0.26	2x 4	SP-#2
WG	---	2x 4	SP-#2

Brace truss as follows:

	O.C.	From	To
TC	Cont.	0- 0- 0	20-10- 8
TC	24.0"	20-10- 8	26-10- 8
TC	Cont.	26-10- 8	47-10- 8
BC	Cont.	0- 0- 0	47-10- 8

One Continuous Lateral Brace
T -G
Attach CLB with (2)-10d nails
at each web.

psf-Ld	Dead	Live
TC	10.0	20.0
BC	10.0	0.0
TC+BC	20.0	20.0
Total	40.0	Spacing 24.0"

Lumber Duration Factor 1.00
Plate Duration Factor 1.00
TC Fb=1.15 Fc=1.10 Ft=1.10
BC Fb=1.10 Fc=1.10 Ft=1.10

Total Load Reactions (Lbs)

Jt	Down	Uplift	Horiz-
A	2314	143 U	231 R
G	2042	170 U	
F	1276	195 U	230 R

Jt	Brg Size	Required
A	4.0"	2.7"
G	5.5"	2.3"
F	3.5"	1.5"

LC# 1 NonStandard Loading
Dur Fctrs - Lbr 1.00 Plt 1.00

plf - Dead		Live*	From	To
TC V	20	0	0.0'	47.9'
BC V	20	0	0.0'	47.9'
TC V	10	0	29.9'	30.9'
TC V	10	0	16.9'	17.9'
BC V	10	80	16.9'	30.9'
MA V	10	0	18.2'	29.6'
MA V	10	0	0.3'	8.1'
MA V	10	0	0.3'	8.1'

LC# 2 Attic Loading
Dur Fctrs - Lbr 1.25 Plt 1.25

plf - Dead		Live*	From	To
TC V	20	40	0.0'	47.9'
BC V	20	0	0.0'	47.9'
TC V	10	0	16.9'	17.9'
TC V	10	0	29.9'	30.9'
BC V	10	80	16.9'	30.9'
MA V	10	0	18.2'	29.6'
MA V	10	0	0.3'	8.1'
MA V	10	0	0.3'	8.1'

Plus 9 Wind Load Case(s)
Plus 2 Unbalanced Load Cases
Plus 1 UBC LL Load Case(s)

Membr	CSI	P Lbs	Axl-CSI-Bnd	
----------Top Chords----------				
A -P	0.47	4387 C	0.13	0.34
P -Q	0.58	4127 C	0.11	0.47
Q -R	0.85	3703 C	0.02	0.83
R -B	0.84	3009 C	0.01	0.83
B -C	0.35	777 C	0.00	0.35
C -D	0.30	377 C	0.00	0.30
D -E	0.66	520 C	0.00	0.66
E -S	0.67	3131 C	0.01	0.66
S -T	0.25	3524 C	0.02	0.23
T -U	0.35	2133 C	0.07	0.28
U -F	0.37	2212 C	0.11	0.26
--------Bottom Chords---------				
A -O	0.93	3907 T	0.65	0.28
O -N	0.80	3908 T	0.65	0.15
N -M	0.34	3729 T	0.10	0.24
M -S1	0.57	3197 T	0.09	0.48
S1-L	0.85	3197 T	0.09	0.76
L -K	0.83	2459 T	0.07	0.76
K -G	0.63	2449 T	0.41	0.22
G -J	0.43	1975 T	0.33	0.10
J -F	0.47	1975 T	0.33	0.14
-------------Webs-------------				
O -P	0.01	123 T		
P -N	0.11	253 T		
N -Q	0.07	186 T		
Q -M	0.55	848 C		
M -R	0.26	1477 T		
L -S	0.16	901 T		
L -T	0.21	1167 T		
K -T	0.23	508 C		
T -G	0.33	1934 C		1 Br
G -U	0.07	442 T		
J -U	0.02	142 T		
------Attic Chords (Top)------				
B -I	0.20	2432 C	0.20	0.00
I -H	0.12	2437 C	0.03	0.09
H -E	0.24	2916 C	0.24	0.00
-------Attic Webs (Top)-------				
I -C	0.01	58 T		
C -H	0.26	610 C		
H -D	0.04	239 T		

TL Defl -0.97" in M -L L/484
LL Defl -0.62" in M -L L/754
Shear // Grain in R -B 0.72

Plates for each ply each face.
Plate - MT20 20 Ga, Gross Area
Plate - MT2H 20 Ga, Gross Area

Jt	Type	Plt Size	X	Y	JSI
A	MT20	4.0x 6.0	0.5	0.3	0.97
A	MT20	3.0x 7.0	Ctr	Ctr	0.00
P	MT20	3.0x 7.0	Ctr	Ctr	0.44
Q	MT20	10.0x10.0	0.7	-1.3	0.75
R#	MT20	3.0x12.0	Ctr	Ctr	0.44
B#	MT20	3.0x12.0	-1.6	Ctr	0.45
C	MT20	6.0x 8.0	0.9	-3.8	0.91
D	MT20	6.0x 8.0	-0.9	-3.8	0.75
E#	MT20	3.0x12.0	1.6	Ctr	0.54
S#	MT20	3.0x12.0	Ctr	Ctr	0.35
T#	MT20	10.0x12.0	0.2	-1.8	0.75
U	MT20	3.0x 7.0	Ctr	Ctr	0.50
F	MT20	4.0x 6.0	Ctr	0.1	0.81
O	MT20	2.0x 4.0	Ctr	Ctr	0.52
N#	MT20	8.0x12.0	Ctr	0.5	0.75
M	MT20	6.0x 6.0	Ctr	-0.6	0.46
S1#	MT20	7.0x 8.0	Ctr	Ctr	0.47
L	MT20	7.0x 6.0	Ctr	-1.8	0.47
K	MT20	6.0x10.0	Ctr	Ctr	0.87
G	MT20	3.0x 7.0	Ctr	Ctr	0.66
J	MT20	2.0x 4.0	Ctr	Ctr	0.52
I	MT20	2.0x 4.0	Ctr	Ctr	0.52
H	MT20	3.0x 7.0	Ctr	Ctr	0.92

= Plate Monitor used

REVIEWED BY:
Robbins Engineering, Inc.
6904 Parke East Blvd.
Tampa, FL 33610

REFER TO ROBBINS ENG. GENERAL NOTES AND SYMBOLS SHEET FOR ADDITIONAL SPECIFICATIONS.
NOTES:
Trusses Manufactured by:
Mayo Truss Co. Inc.
Analysis Conforms To:
FBC2004
OH Loading
Soffit psf 2.0
Design checked for 10 psf non-concurrent LL on BC.
NOTE: USER MODIFIED PLATES
This design may have plates selected through a plate monitor.
Wind Loads - ANSI / ASCE 7-02
Truss is designed as
Components and Claddings*
for Exterior zone location.
Wind Speed: 110 mph
Mean Roof Height: 15-0
Exposure Category: B
Occupancy Factor : 1.00
Building Type: Enclosed

TC Dead Load: 5.0 psf
BC Dead Load: 5.0 psf
User-defined wind-exposed BC regions --From-- ---To---
39- 7-12 47-10- 8
Unbalanced Loads Checked
Load Factors = 1.00 and 0.00
Max comp. force 4387 Lbs
Max tens. force 3908 Lbs
Quality Control Factor 1.25

Philip J. O'Regan, FL Lic. #58126
Robbins Engineering
6904 Parke East Blvd
Tampa, FL, 33610
FL Cert.#5555

Job	Mark	Quan	Type	Span	P1-H1	Left OH	Right OH	Engineering
LEEBLATTER	A8	3	SP	471008	6	0	2- 0- 0	T2668822

LEE & ANGIE BLATTER

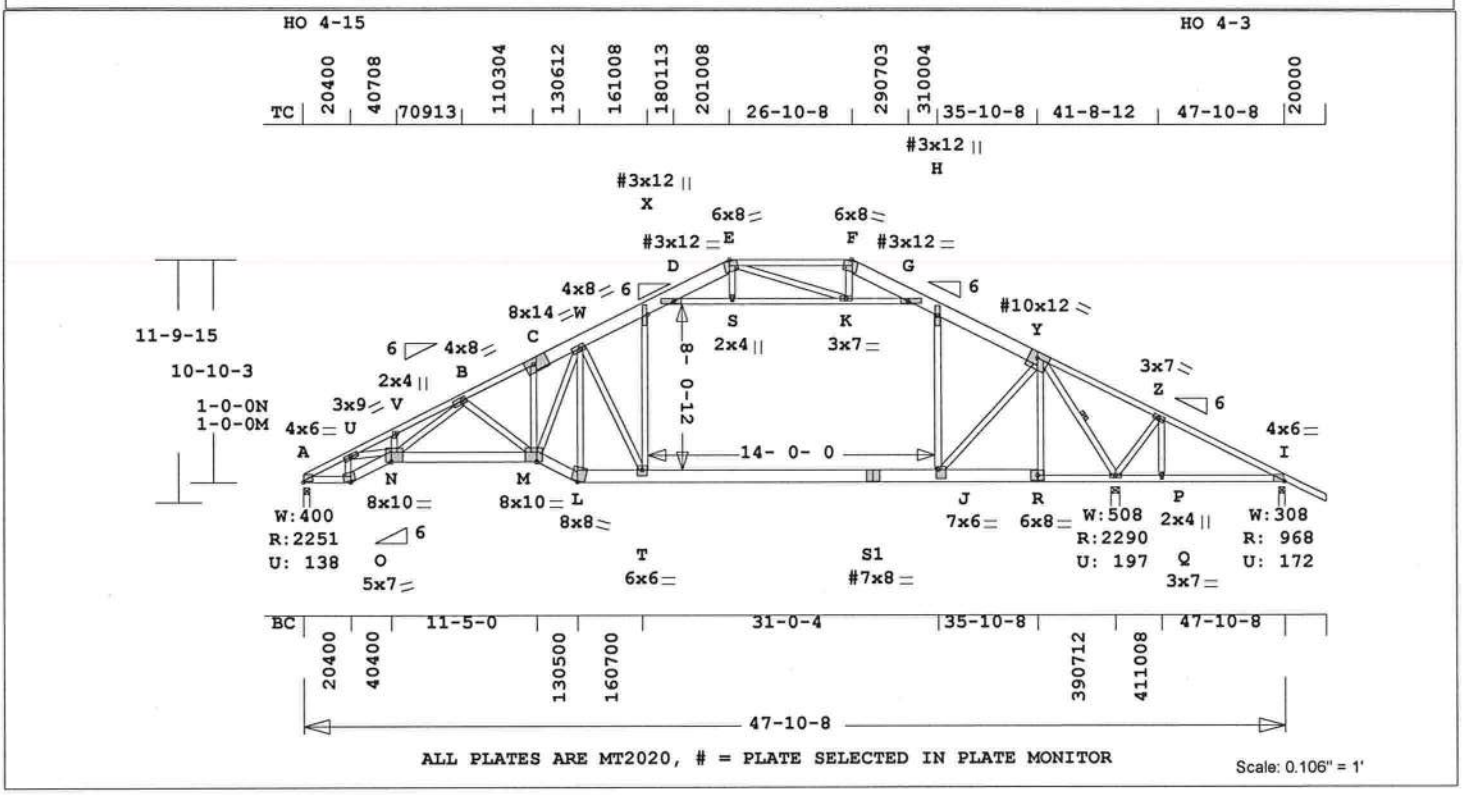

ALL PLATES ARE MT2020, # = PLATE SELECTED IN PLATE MONITOR

Scale: 0.106" = 1'

Robbins Engineering, Inc./Online Plus™ APPROX. TRUSS WEIGHT: 473.1 LBS

Online Plus -- Version 21.0.060
RUN DATE: 06-SEP-07

	CSI	-Size-	----Lumber----
TC	0.93	2x 4	SP-#1
--	0.85	2x 8	SP-#1
	C -E		
--	0.36	2x 4	SP-#2
	E -F	Y -I	
--	0.71	2x 8	SP-#2
	F -Y		
BC	0.93	2x 6	SP-#2
--	0.85	2x 4	SP-#1
	A -O		
--	0.88	2x 8	SP-2401
	L -S1	S1-R	
--	0.58	2x 4	SP-#2
	R -I		
WB	0.74	2x 4	SP-#2
ACT	0.22	2x 4	SP-#2
AWT	0.33	2x 4	SP-#2

Brace truss as follows:

	O.C.	From	To
TC	Cont.	0- 0- 0	20-10- 8
TC	24.0"	20-10- 8	26-10- 8
TC	Cont.	26-10- 8	47-10- 8
BC	Cont.	0- 0- 0	47-10- 8

One Continuous Lateral Brace
Y -Q
Attach CLB with (2)-10d nails
at each web.

psf-Ld	Dead	Live
TC	10.0	20.0
BC	10.0	0.0
TC+BC	20.0	20.0

Total 40.0 Spacing 24.0"
Lumber Duration Factor 1.00
Plate Duration Factor 1.00
TC Fb=1.15 Fc=1.10 Ft=1.10
BC Fb=1.10 Fc=1.10 Ft=1.10

Total Load Reactions (Lbs)

Jt	Down	Uplift	Horiz-
A	2251	138 U	231 R
Q	2291	197 U	
I	968	172 U	230 R

Jt	Brg Size	Required
A	4.0"	2.7"
Q	5.5"	2.5"
I	3.5"	1.5"

LC# 1 NonStandard Loading
Dur Fctrs - Lbr 1.00 Plt 1.00

plf -	Dead	Live*	From	To
TC V	20	0	0.0'	47.9'
BC V	20	0	0.0'	47.9'
TC V	10	0	29.9'	30.9'
TC V	10	0	16.9'	17.9'
BC V	10	80	16.9'	30.9'
MA V	10	0	18.2'	29.6'
MA V	10	0	0.3'	8.1'
MA V	10	0	0.3'	8.1'

LC# 2 Attic Loading
Dur Fctrs - Lbr 1.25 Plt 1.25

plf -	Dead	Live*	From	To
TC V	20	40	0.0'	47.9'
BC V	20	0	0.0'	47.9'
TC V	10	0	16.9'	17.9'
TC V	10	0	29.9'	30.9'
BC V	10	80	16.9'	30.9'
MA V	10	0	18.2'	29.6'
MA V	10	0	0.3'	8.1'
MA V	10	0	0.3'	8.1'

Plus 9 Wind Load Case(s)
Plus 2 Unbalanced Load Cases
Plus 1 UBC LL Load Case(s)

Membr	CSI	P Lbs	Axl	CSI-Bnd	
----------Top Chords----------					
A -U	0.47	4347	C	0.10	0.37
U -V	0.82	8508	C	0.43	0.39
V -B	0.93	8418	C	0.47	0.46
B -C	0.29	4865	C	0.12	0.17
C -W	0.14	4770	C	0.03	0.11
W -X	0.85	3662	C	0.01	0.84
X -D	0.85	2816	C	0.01	0.84
D -E	0.46	907	C	0.00	0.46
E -F	0.29	392	C	0.00	0.29
F -G	0.70	546	C	0.00	0.70
G -H	0.71	2975	C	0.01	0.70
H -Y	0.35	3289	C	0.01	0.34
Y -Z	0.36	1471	C	0.00	0.36
Z -I	0.36	1562	C	0.00	0.36
--------Bottom Chords---------					
A -O	0.85	3809	T	0.50	0.35
O -N	0.93	4147	T	0.50	0.43
N -M	0.85	5135	T	0.62	0.23
M -L	0.80	3779	T	0.46	0.34
L -T	0.32	3511	T	0.10	0.22
T -S1	0.56	3003	T	0.09	0.47
S1-J	0.88	3002	T	0.09	0.79
J -R	0.85	2066	T	0.07	0.78
R -Q	0.58	2056	T	0.34	0.24
Q -P	0.34	1398	T	0.23	0.11
P -I	0.33	1398	T	0.23	0.10
----------Webs----------					
O -U	0.15	1660	C		
U -N	0.69	3771	T		
N -V	0.01	112	T		
N -B	0.57	3116	T		
B -M	0.25	956	C		
M -C	0.02	166	T		
M -W	0.41	2238	T		
L -W	0.72	1465	C		
W -T	0.74	1233	C		
T -X	0.32	1809	T		
J -H	0.13	757	T		
J -Y	0.26	1437	T		
R -Y	0.24	548	C		
Y -Q	0.38	2199	C		1 Br
Q -Z	0.08	453	T		
P -Z	0.02	153	T		
------Attic Chords (Top)------					
D -S	0.17	2079	C	0.17	0.00
S -K	0.10	2084	C	0.07	0.03
K -G	0.22	2694	C	0.22	0.00
-------Attic Webs (Top)-------					
S -E	0.01	56	T		
E -K	0.33	758	C		
K -F	0.05	284	T		

TL Defl -1.26" in T -J L/373
LL Defl -0.78" in T -J L/601

Hz Disp	LL	DL	TL
Jt I	0.21"	0.14"	0.35"

Shear // Grain in X -D 0.69

Plates for each ply each face.
Plate - MT20 20 Ga, Gross Area
Plate - MT2H 20 Ga, Gross Area

Jt	Type	Plt Size	X	Y	JSI
A	MT20	4.0x 6.0	0.5	0.3	0.96
U	MT20	3.0x 9.0	Ctr	Ctr	0.89
V	MT20	2.0x 4.0	Ctr	Ctr	0.52
B	MT20	4.0x 8.0	Ctr	Ctr	0.94
C	MT20	8.0x14.0	0.2-	0.4	0.75
W	MT20	4.0x 8.0	-0.9-	0.4	0.82
X#	MT20	3.0x12.0	Ctr	0.5	0.54
D#	MT20	3.0x12.0	-1.6	Ctr	0.39
E	MT20	6.0x 8.0	0.9-	3.8	0.91
F	MT20	6.0x 8.0	-0.9-	3.8	0.75
G#	MT20	3.0x12.0	1.6	Ctr	0.50
H#	MT20	3.0x12.0	Ctr	Ctr	0.35
Y#	MT20	10.0x12.0	0.2-	1.8	0.75
Z	MT20	3.0x 7.0	Ctr	Ctr	0.50
I	MT20	4.0x 6.0	Ctr	0.1	0.81
O	MT20	5.0x 7.0	-0.8	3.2	0.75
N	MT20	8.0x10.0	Ctr	-1.5	0.92
M	MT20	8.0x10.0	Ctr	-1.5	0.62
L	MT20	8.0x 8.0	1.1	4.8	0.56
T	MT20	6.0x 6.0	Ctr	-0.6	0.53
S1#	MT20	7.0x 8.0	Ctr	Ctr	0.47
J	MT20	7.0x 6.0	Ctr	-1.8	0.55
R	MT20	6.0x 8.0	Ctr	Ctr	0.87
Q	MT20	3.0x 7.0	Ctr	Ctr	0.75
P	MT20	2.0x 4.0	Ctr	Ctr	0.52
S	MT20	2.0x 4.0	Ctr	Ctr	0.52
K	MT20	3.0x 7.0	Ctr	Ctr	0.92

= Plate Monitor used

REVIEWED BY:
Robbins Engineering, Inc.
6904 Parke East Blvd.
Tampa, FL 33610

REFER TO ROBBINS ENG. GENERAL NOTES AND SYMBOLS SHEET FOR

ADDITIONAL SPECIFICATIONS.
NOTES:
Trusses Manufactured by:
Mayo Truss Co. Inc.
Analysis Conforms To:
FBC2004
OH Loading
Soffit psf 2.0
Design checked for 10 psf non-concurrent LL on BC.
NOTE: USER MODIFIED PLATES
This design may have plates selected through a plate monitor.
Wind Loads - ANSI / ASCE 7-02
Truss is designed as
Components and Claddings*
for Exterior zone location.
Wind Speed: 110 mph
Mean Roof Height: 15-0
Exposure Category: B
Occupancy Factor : 1.00
Building Type: Enclosed
TC Dead Load: 5.0 psf
BC Dead Load: 5.0 psf
User-defined wind-exposed BC regions --From-- ---To---
39- 7-12 47-10- 8
Unbalanced Loads Checked
Load Factors = 1.00 and 0.00
Max comp. force 8508 Lbs
Max tens. force 5135 Lbs
Quality Control Factor 1.25

Philip J. O'Regan, FL Lic. #58126
Robbins Engineering
6904 Parke East Blvd
Tampa, FL, 33610
FL Cert.#5555

Job	Mark	Quan	Type	Span	P1-H1	Left OH	Right OH	Engineering
LEEBLATTER	A9	3	SP	471008	6	0	2- 0- 0	T2668823

LEE & ANGIE BLATTER

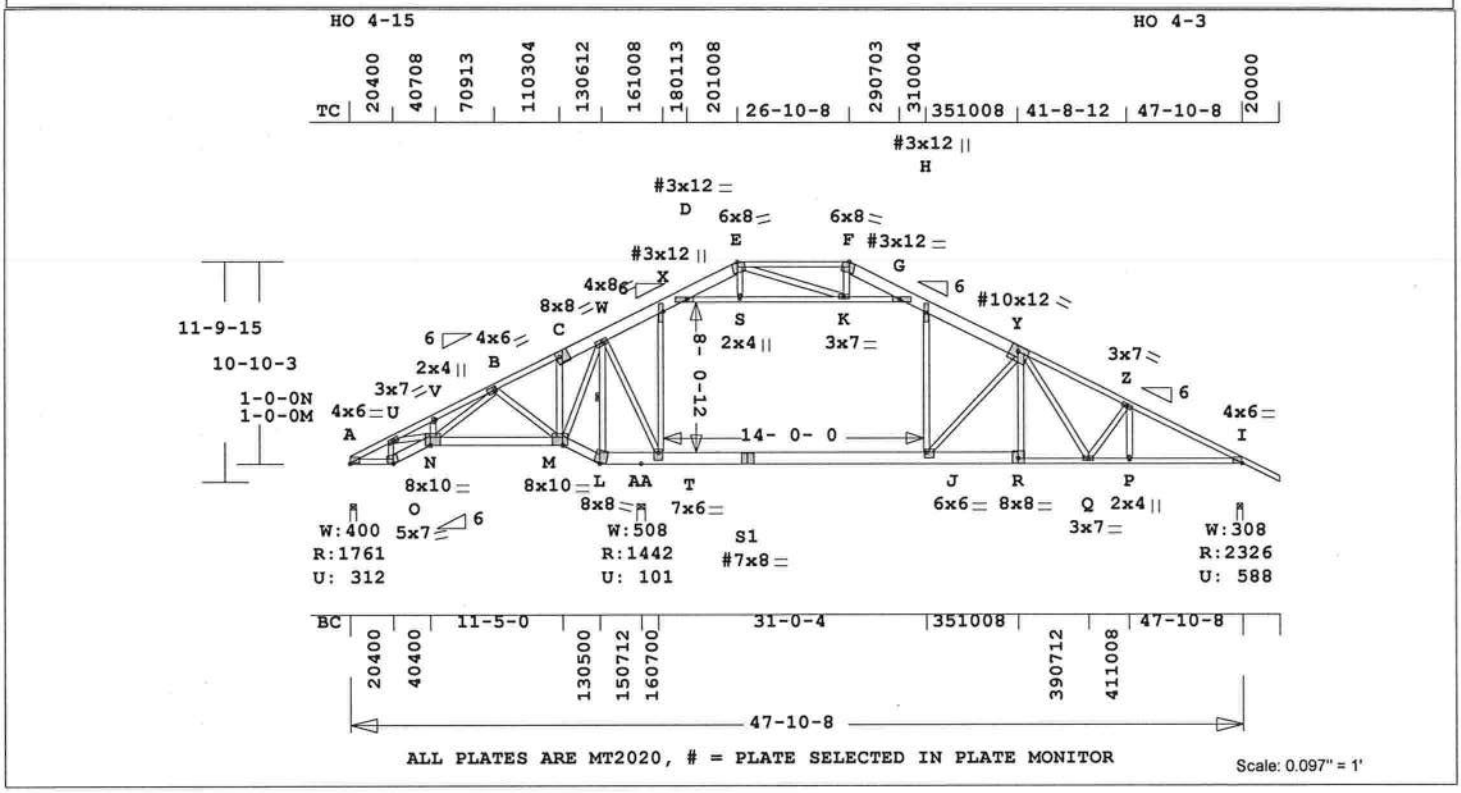

Robbins Engineering, Inc./Online Plus™ APPROX. TRUSS WEIGHT: 473.1 LBS

Online Plus -- Version 21.0.060
RUN DATE: 06-SEP-07

	CSI	-Size-	----Lumber----
TC	0.92	2x 8	SP-#2
--	0.60	2x 4	SP-#1
	A -C		
--	0.69	2x 8	SP-#1
	C -E		
--	0.70	2x 4	SP-#2
	E -F	Y -I	
BC	0.97	2x 8	SP-2401
--	0.64	2x 4	SP-#1
	A -O		
--	0.70	2x 6	SP-#2
	O -N	N -M	M -L
--	0.82	2x 4	SP-#2
	R -I		
WB	0.61	2x 4	SP-#2
ACT	0.27	2x 4	SP-#2
AWT	0.18	2x 4	SP-#2

Brace truss as follows:

	O.C.	From	To
TC	Cont.	0- 0- 0	20-10- 8
TC	24.0"	20-10- 8	26-10- 8
TC	Cont.	26-10- 8	47-10- 8
BC	Cont.	0- 0- 0	47-10- 8

One Continuous Lateral Brace
L -W
Attach CLB with (2)-10d nails at each web.

psf-Ld	Dead	Live
TC	10.0	20.0
BC	10.0	0.0
TC+BC	20.0	20.0

Total 40.0 Spacing 24.0"
Lumber Duration Factor 1.00
Plate Duration Factor 1.00
TC Fb=1.15 Fc=1.10 Ft=1.10
BC Fb=1.10 Fc=1.10 Ft=1.10

Total Load Reactions (Lbs)

Jt	Down	Uplift	Horiz-
A	1761	312 U	234 R
AA	1443	101 U	
I	2326	588 U	230 R

Jt	Brg Size	Required
A	4.0"	2.1"
AA	5.5"	1.5"
I	3.5"	2.7"

LC# 1 NonStandard Loading
Dur Fctrs - Lbr 1.00 Plt 1.00

plf - Dead	Live*	From	To
TC V 20	0	0.0'	47.9'
BC V 20	0	0.0'	47.9'
TC V 10	0	29.9'	30.9'
TC V 10	0	16.9'	17.9'
BC V 10	80	16.9'	30.9'
MA V 10	0	18.2'	29.6'
MA V 10	0	0.3'	8.1'
MA V 10	0	0.3'	8.1'

LC# 2 Attic Loading
Dur Fctrs - Lbr 1.25 Plt 1.25

plf - Dead	Live*	From	To
TC V 20	40	0.0'	47.9'
BC V 20	0	0.0'	47.9'
TC V 10	0	16.9'	17.9'
TC V 10	0	29.9'	30.9'
BC V 10	80	16.9'	30.9'
MA V 10	0	18.2'	29.6'
MA V 10	0	0.3'	8.1'
MA V 10	0	0.3'	8.1'

Plus 9 Wind Load Case(s)
Plus 2 Unbalanced Load Cases
Plus 1 UBC LL Load Case(s)

Membr	CSI	P Lbs		Axl-CSI-Bnd	
----------Top Chords----------					
A -U	0.35	3358	C	0.06	0.29
U -V	0.53	6509	C	0.25	0.28
V -B	0.60	6440	C	0.28	0.32
B -C	0.28	3539	C	0.18	0.10
C -W	0.14	3505	C	0.13	0.01
W -X	0.44	3113	C	0.01	0.43
X -D	0.69	2881	C	0.01	0.68
D -E	0.68	446	C	0.00	0.68
E -F	0.26	775	C	0.00	0.26
F -G	0.45	758	C	0.00	0.45
G -H	0.92	2712	C	0.01	0.91
H -Y	0.92	3385	C	0.01	0.91
Y -Z	0.70	4024	C	0.34	0.36
Z -I	0.54	4228	C	0.36	0.18
--------Bottom Chords---------					
A -O	0.64	2942	T	0.38	0.26
O -N	0.70	3208	T	0.39	0.31
N -M	0.65	3830	T	0.46	0.19
M -L	0.59	2657	T	0.32	0.27
L -AA	0.87	2456	T	0.08	0.79
AA-T	0.96	2456	T	0.07	0.89
T -S1	0.97	2897	T	0.08	0.89
S1-J	0.56	2897	T	0.08	0.48
J -R	0.24	3512	T	0.10	0.14
R -Q	0.62	3513	T	0.58	0.04
Q -P	0.71	3773	T	0.63	0.08
P -I	0.82	3773	T	0.63	0.19
----------Webs----------					
O -U	0.12	1284	C		
U -N	0.52	2857	T		
N -V	0.01	79	T		
N -B	0.46	2510	T		
B -M	0.21	817	C		
M -C	0.02	199	T		
M -W	0.36	1874	T		
L -W	0.37	2438	C		1 Br
W -T	0.20	1078	T		
T -X	0.19	608	T		
J -H	0.56	1435	T		
J -Y	0.61	1098	T		
R -Y	0.13	304	C		
Y -Q	0.24	409	C		
Q -Z	0.05	394	T		
P -Z	0.02	154	C		
------Attic Chords (Top)------					
D -S	0.25	2820	C	0.23	0.02
S -K	0.27	2825	C	0.23	0.04
K -G	0.22	2168	C	0.18	0.04
-------Attic Webs (Top)-------					
S -E	0.01	70	T		
E -K	0.18	688	T		
K -F	0.02	186	T		

TL Defl	-1.23" in T -J	L/309	
LL Defl	-0.76" in T -J	L/502	
Hz Disp	LL	DL	TL
Jt I	0.19"	0.13"	0.32"
Shear // Grain	in L -AA	0.85	

Plates for each ply each face.
Plate - MT20 20 Ga, Gross Area
Plate - MT2H 20 Ga, Gross Area

Jt	Type	Plt Size	X	Y	JSI
A	MT20	4.0x 6.0	0.5	0.3	0.89
U	MT20	3.0x 7.0	Ctr	Ctr	0.85
V	MT20	2.0x 4.0	Ctr	Ctr	0.52
B	MT20	4.0x 6.0	Ctr	Ctr	0.82
C	MT20	8.0x 8.0	0.2-0.4		0.77
W	MT20	4.0x 8.0	-0.4-0.2		0.84
X#	MT20	3.0x12.0	Ctr	Ctr	0.35
D#	MT20	3.0x12.0	-1.6	Ctr	0.52
E	MT20	6.0x 8.0	0.9-3.8		0.91
F	MT20	6.0x 8.0	-0.9-3.8		0.75
G#	MT20	3.0x12.0	1.6	Ctr	0.40
H#	MT20	3.0x12.0	Ctr	Ctr	0.43
Y#	MT20	10.0x12.0	0.2-1.8		0.75
Z	MT20	3.0x 7.0	Ctr	Ctr	0.50
I	MT20	4.0x 6.0	Ctr	0.1	0.90
O	MT20	5.0x 7.0	-0.8	3.2	0.75
N	MT20	8.0x10.0	Ctr	-1.5	0.70
M	MT20	8.0x10.0	Ctr	-1.5	0.56
L	MT20	8.0x 8.0	1.1	4.8	0.56
T	MT20	7.0x 6.0	Ctr	-1.4	0.52
S1#	MT20	7.0x 8.0	Ctr	Ctr	0.73
J	MT20	6.0x 6.0	Ctr	-0.6	0.46
R	MT20	8.0x 8.0	Ctr	0.5	0.76
Q	MT20	3.0x 7.0	Ctr	Ctr	0.55
P	MT20	2.0x 4.0	Ctr	Ctr	0.52
S	MT20	2.0x 4.0	Ctr	Ctr	0.52
K	MT20	3.0x 7.0	Ctr	Ctr	0.92

= Plate Monitor used

REVIEWED BY:
Robbins Engineering, Inc.
6904 Parke East Blvd.
Tampa, FL 33610

REFER TO ROBBINS ENG. GENERAL NOTES AND SYMBOLS SHEET FOR ADDITIONAL SPECIFICATIONS.

NOTES:
Trusses Manufactured by:
Mayo Truss Co. Inc.
Analysis Conforms To:
FBC2004
OH Loading
Soffit psf 2.0
Design checked for 10 psf non-concurrent LL on BC.
NOTE: USER MODIFIED PLATES
This design may have plates selected through a plate monitor.
Wind Loads - ANSI / ASCE 7-02
Truss is designed as
Components and Claddings* for Exterior zone location.
Wind Speed: 110 mph
Mean Roof Height: 15-0
Exposure Category: B
Occupancy Factor : 1.00
Building Type: Enclosed
TC Dead Load: 5.0 psf
BC Dead Load: 5.0 psf
User-defined wind-exposed BC regions --From-- ---To---
15- 7-12 47-10- 8
Unbalanced Loads Checked
Load Factors = 1.00 and 0.00
Max comp. force 6509 Lbs
Max tens. force 3830 Lbs
Quality Control Factor 1.25

Philip J. O'Regan, FL Lic. #58126
Robbins Engineering
6904 Parke East Blvd
Tampa, FL, 33610
FL Cert.#5555

Job	Mark	Quan	Type	Span	P1-H1	Left OH	Right OH	Engineering
LEEBLATTER	A10	1	HIPP	471008	6	0	2- 0- 0	T2668824

LEE & ANGIE BLATTER

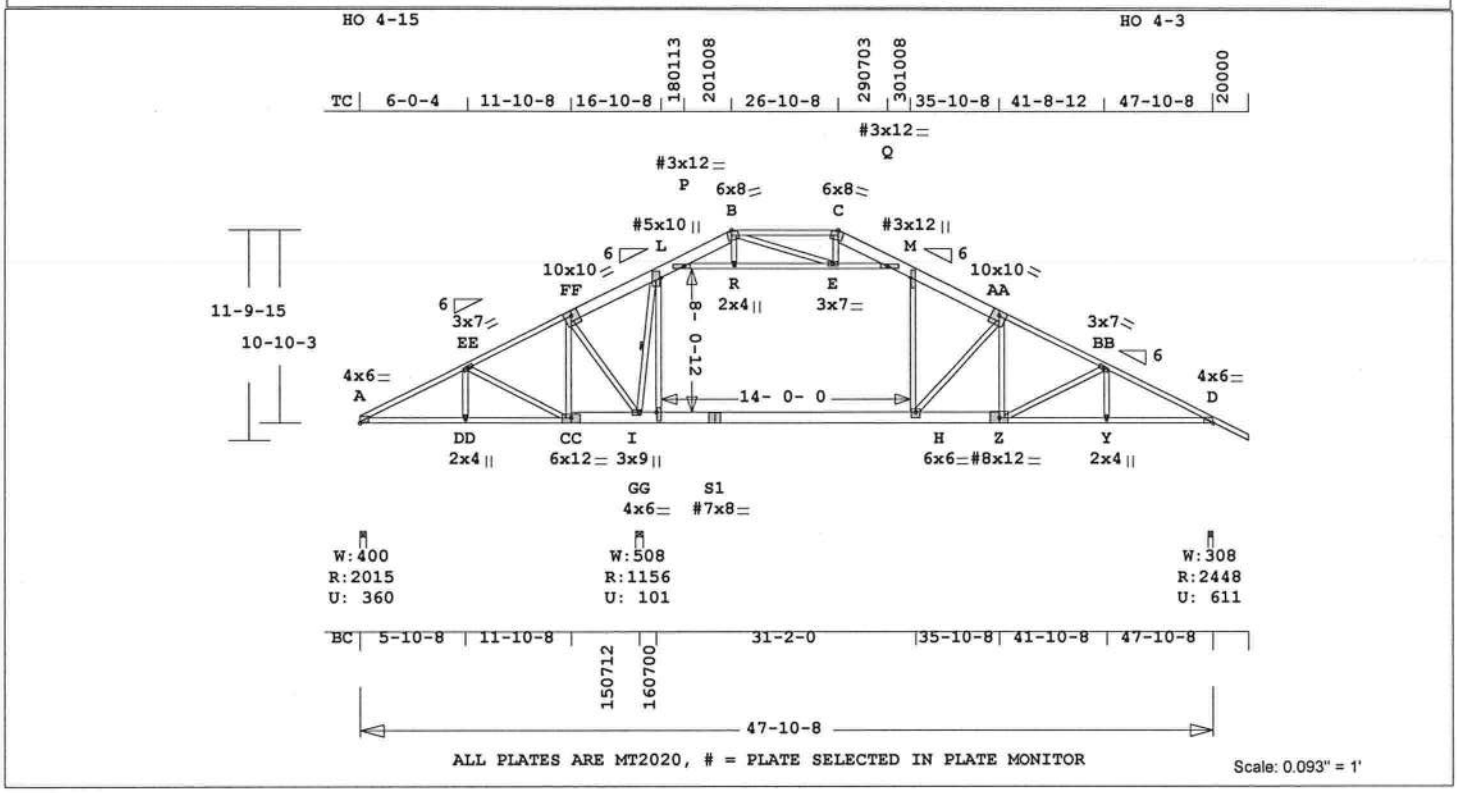

Robbins Engineering, Inc./Online Plus™ APPROX. TRUSS WEIGHT: 443.4 LBS

```
Online Plus -- Version 21.0.060
RUN DATE: 06-SEP-07

     CSI -Size- ----Lumber----
TC  0.78  2x 8  SP-#2
--  0.65  2x 4  SP-#2
    A -FF  B -C   AA-D
BC  0.89  2x 4  SP-#2
--  0.88  2x 8  SP-2401
    CC-S1  S1-Z
WB  0.53  2x 4  SP-#2
ACT 0.27  2x 4  SP-#2
AWT 0.12  2x 4  SP-#2

Brace truss as follows:
      O.C.      From       To
 TC  Cont.    0- 0- 0 20-10- 8
 TC   24.0"  20-10- 8 26-10- 8
 TC  Cont.   26-10- 8 47-10- 8
 BC  Cont.    0- 0- 0 47-10- 8
One Continuous Lateral Brace
  GG-L
Attach CLB with (2)-10d nails
  at each web.

psf-Ld  Dead  Live
TC      10.0  20.0
BC      10.0   0.0
TC+BC   20.0  20.0
Total   40.0   Spacing  24.0"
Lumber Duration Factor  1.00
Plate  Duration Factor  1.00
TC Fb=1.15  Fc=1.10  Ft=1.10
BC Fb=1.10  Fc=1.10  Ft=1.10

Total Load Reactions (Lbs)
Jt  Down  Uplift  Horiz-
A   2015   361 U   234 R
GG  1157   102 U
D   2449   612 U   230 R

Jt   Brg Size   Required
A       4.0"       2.4"
GG      5.5"       1.5"
D       3.5"       2.9"

LC#  1  NonStandard Loading
Dur Fctrs - Lbr 1.00  Plt 1.00
plf - Dead  Live* From    To
TC V    20     0   0.0'  47.9'
BC V    20     0   0.0'  47.9'
TC V    10     0  16.9'  17.9'
TC V    10     0  29.9'  30.9'
BC V    10    80  16.9'  30.9'
MA V    10     0  18.2'  29.6'
MA V    10     0   0.3'   8.0'
MA V    10     0   0.3'   8.1'

LC#  2  Attic Loading
Dur Fctrs - Lbr 1.25  Plt 1.25
plf - Dead  Live* From    To
TC V    20    40   0.0'  47.9'
BC V    20     0   0.0'  47.9'
TC V    10     0  16.9'  17.9'
TC V    10     0  29.9'  30.9'
BC V    10    80  16.9'  30.9'
MA V    10     0  18.2'  29.6'
MA V    10     0   0.3'   8.0'
MA V    10     0   0.3'   8.1'

Plus  9 Wind Load Case(s)
Plus  2 Unbalanced Load Cases
Plus  1 UBC LL Load Case(s)

Membr  CSI  P Lbs  Axl-CSI-Bnd
----------Top Chords----------
A -EE 0.51  3773 C  0.10  0.41
EE-FF 0.53  3455 C  0.22  0.31
FF-L  0.23  3353 C  0.14  0.09
L -P  0.61  3153 C  0.01  0.60
P -B  0.60   523 C  0.00  0.60
B -C  0.27   700 C  0.00  0.27
C -Q  0.25   720 C  0.00  0.25
Q -M  0.77  3039 C  0.01  0.76
M -AA 0.78  3728 C  0.02  0.76
AA-BB 0.65  4172 C  0.30  0.35
BB-D  0.52  4501 C  0.33  0.19
--------Bottom Chords---------
A -DD 0.89  3358 T  0.56  0.33
DD-CC 0.71  3359 T  0.56  0.15
CC-GG 0.49  3123 T  0.08  0.41
GG-I  0.88  3226 T  0.09  0.79
I -S1 0.88  3226 T  0.09  0.79
S1-H  0.56  3226 T  0.09  0.47
H -Z  0.33  3766 T  0.10  0.23
Z -Y  0.80  4016 T  0.67  0.13
Y -D  0.87  4015 T  0.67  0.20
-------------Webs-------------
DD-EE 0.02   142 T
EE-CC 0.17   336 C
CC-FF 0.09   219 C
FF-GG 0.15   298 C
GG-L  0.34  1597 C         1 Br
I -L  0.49  2355 T
H -M  0.52  1467 T
H -AA 0.53   902 T
Z -AA 0.17   389 C
Z -BB 0.15   414 T
Y -BB 0.02   153 T
------Attic Chords (Top)------
P -R  0.25  2992 C  0.23  0.02
R -E  0.27  2998 C  0.23  0.04
E -Q  0.23  2542 C  0.19  0.04
-------Attic Webs (Top)-------
R -B  0.01    69 T
B -E  0.12   476 T
E -C  0.02   143 T

TL Defl  -1.01" in I -H  L/376
LL Defl  -0.63" in I -H  L/599
Shear // Grain  in GG-I   0.77

Plates for each ply each face.
Plate - MT20 20 Ga, Gross Area
Plate - MT2H 20 Ga, Gross Area
Jt Type  Plt Size  X   Y   JSI
A  MT20  4.0x 6.0 0.5 0.3 0.89
EE MT20  3.0x 7.0 Ctr Ctr 0.44
FF MT20 10.0x10.0 0.7-1.3 0.75
L# MT20  5.0x10.0-1.8 Ctr 0.63
P# MT20  3.0x12.0-1.6 Ctr 0.55
B  MT20  6.0x 8.0 0.9-3.8 0.91
C  MT20  6.0x 8.0-0.9-3.8 0.75
Q# MT20  3.0x12.0 1.6 Ctr 0.47
M# MT20  3.0x12.0 Ctr Ctr 0.44
AA MT20 10.0x10.0-0.7-1.3 0.75
BB MT20  3.0x 7.0 Ctr Ctr 0.44
D  MT20  4.0x 6.0 Ctr 0.1 0.96
DD MT20  2.0x 4.0 Ctr Ctr 0.52
CC MT20  6.0x12.0 Ctr-0.5 0.75
GG MT20  4.0x 6.0 Ctr Ctr 0.46
I  MT20  3.0x 9.0 Ctr-1.5 0.93
S1#MT20  7.0x 8.0 Ctr Ctr 0.47
H  MT20  6.0x 6.0 Ctr-0.6 0.46
Z# MT20  8.0x12.0 Ctr 0.5 0.75
Y  MT20  2.0x 4.0 Ctr Ctr 0.52
R  MT20  2.0x 4.0 Ctr Ctr 0.52
E  MT20  3.0x 7.0 Ctr Ctr 0.92

# = Plate Monitor used

REVIEWED BY:
 Robbins Engineering, Inc.
 6904 Parke East Blvd.
 Tampa, FL  33610

REFER TO ROBBINS ENG. GENERAL
NOTES AND SYMBOLS SHEET FOR
ADDITIONAL SPECIFICATIONS.
NOTES:
Trusses Manufactured by:
  Mayo Truss Co. Inc.
Analysis Conforms To:
  FBC2004
OH Loading
  Soffit psf 2.0
Design checked for 10 psf non-
  concurrent LL on BC.
NOTE: USER MODIFIED PLATES
  This design may have plates
  selected through a plate
  monitor.
Wind Loads - ANSI / ASCE 7-02
Truss is designed as
  Components and Claddings*
  for Exterior zone location.
  Wind Speed:          110 mph
  Mean Roof Height:  15-0
  Exposure  Category:    B
  Occupancy Factor  : 1.00
  Building Type: Enclosed
  TC Dead Load:        5.0 psf
  BC Dead Load:        5.0 psf

User-defined wind-exposed BC
  regions  --From--   ---To---
           15- 7-12   47-10- 8
Unbalanced Loads Checked
  Load Factors = 1.00 and 0.00
Max comp. force     4501 Lbs
Max tens. force     4016 Lbs
Quality Control Factor 1.25
```


Philip J. O'Regan, FL Lic. #58126
Robbins Engineering
6904 Parke East Blvd
Tampa, FL, 33610
FL Cert.#5555

Job	Mark	Quan	Type	Span	P1-H1	Left OH	Right OH	Engineering
LEEBLATTER	A11	2	HIPP	471008	6	0	0	T2668825

LEE & ANGIE BLATTER

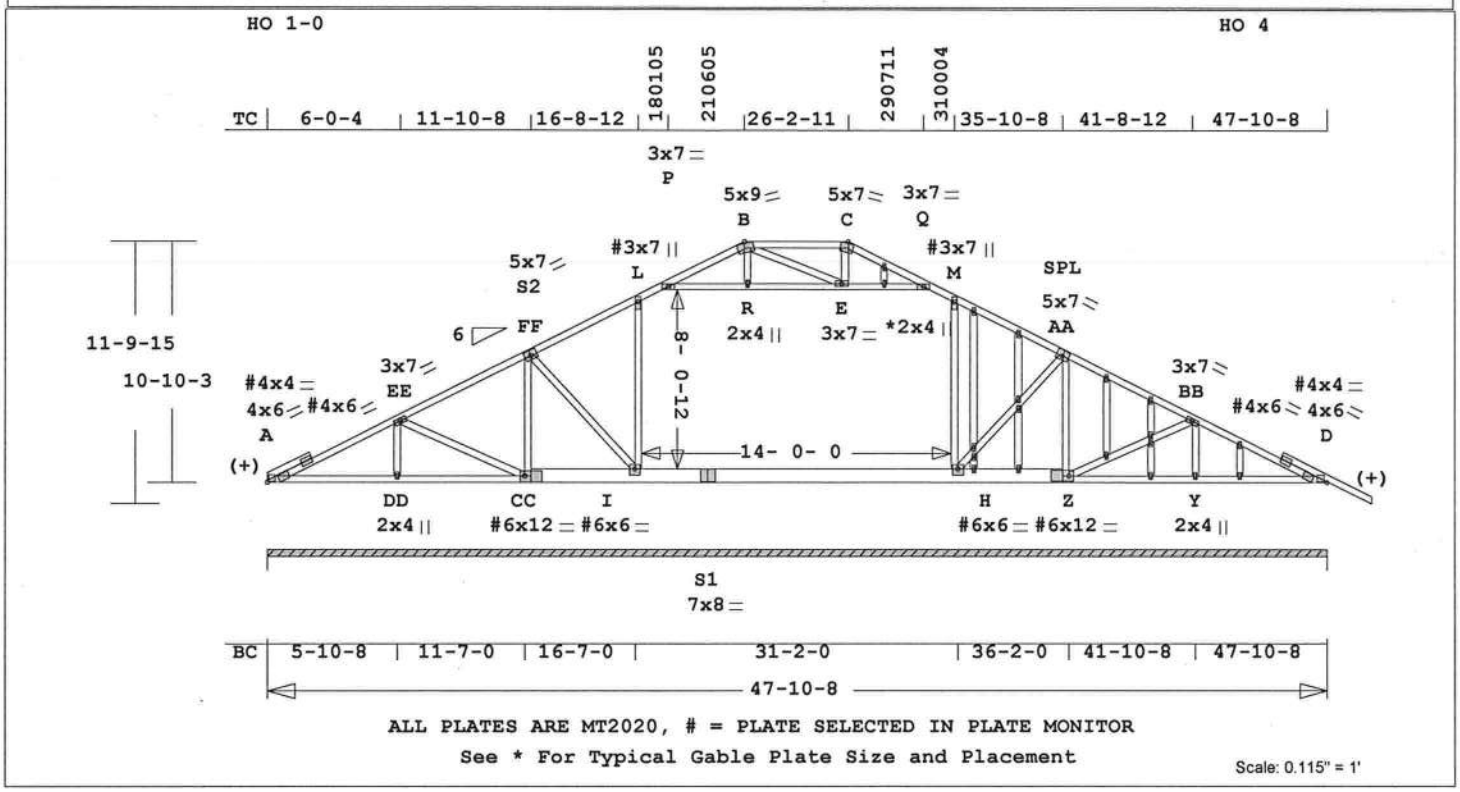

ALL PLATES ARE MT2020, # = PLATE SELECTED IN PLATE MONITOR

See * For Typical Gable Plate Size and Placement

Scale: 0.115" = 1'

Robbins Engineering, Inc./Online Plus™ APPROX. TRUSS WEIGHT: 433.7 LBS

Online Plus -- Version 21.0.060
RUN DATE: 06-SEP-07

	CSI	-Size-	----Lumber----
(+) TC	0.41	2x 4	SP-#2
BC	0.36	2x 8	SP-SS
--	0.20	2x 4	SP-#2
	A -CC	Z -D	
WB	0.28	2x 4	SP-#2
ACT	0.05	2x 4	SP-#2
AWT	0.02	2x 4	SP-#2

Brace truss as follows:

	O.C.	From	To
TC	Cont.	0- 0- 0	21- 6- 5
TC	24.0"	21- 6- 5	26- 2-11
TC	Cont.	26- 2-11	47-10- 8
BC	Cont.	0- 0- 0	47-10- 8

psf-Ld	Dead	Live
TC	10.0	20.0
BC	10.0	0.0
TC+BC	20.0	20.0
Total	40.0	Spacing 24.0"

Lumber Duration Factor 1.00
Plate Duration Factor 1.00
TC Fb=1.15 Fc=1.10 Ft=1.10
BC Fb=1.10 Fc=1.10 Ft=1.10

Total Load Reactions (Lbs)

Jt	Down	Uplift	Horiz-
A	5223	316 U	234 R

Jt	Brg Size	Required
A	574.5"	0"-to- 575"

LC# 1 Attic Loading
Dur Fctrs - Lbr 1.00 Plt 1.00

plf -	Dead	Live*	From	To
TC V	20	40	0.0'	47.9'
BC V	20	0	0.0'	47.9'
TC V	10	0	16.9'	17.8'
TC V	10	0	29.9'	30.9'
BC V	10	80	16.9'	30.9'
MA V	10	0	18.1'	29.6'
MA V	10	0	0.3'	8.1'
MA V	10	0	0.3'	8.1'

Plus 9 Wind Load Case(s)
Plus 2 Unbalanced Load Cases
Plus 1 UBC LL Load Case(s)

Membr	CSI	P Lbs	Axl-CSI-Bnd
----------Top Chords----------			
A -EE	0.40	596 C	0.00 0.40
EE-S2	0.40	609 C	0.00 0.40
S2-L	0.35	698 C	0.00 0.35
L -P	0.35	764 C	0.00 0.35
P -B	0.20	706 C	0.00 0.20
B -C	0.24	638 C	0.00 0.24
C -Q	0.20	705 C	0.00 0.20
Q -M	0.36	764 C	0.00 0.36
M -AA	0.36	698 C	0.00 0.36
AA-BB	0.41	609 C	0.00 0.41
BB-D	0.41	596 C	0.00 0.41
--------Bottom Chords---------			
A -DD	0.18	13 T	0.00 0.18
DD-CC	0.18	0 T	0.00 0.18
CC-I	0.02	0 T	0.00 0.02
I -S1	0.36	0 T	0.00 0.36
S1-H	0.36	0 T	0.00 0.36
H -Z	0.30	0 T	0.00 0.30
Z -Y	0.20	0 T	0.00 0.20
Y -D	0.20	11 T	0.00 0.20
----------Webs----------			
DD-EE	0.05	380 C	
EE-CC	0.04	249 T	
CC-S2	0.18	449 C	
S2-I	0.03	166 T	
I -L	0.28	367 C	
H -M	0.28	368 C	
H -AA	0.03	166 T	
Z -AA	0.18	449 C	
Z -BB	0.04	238 T	
Y -BB	0.05	382 C	
------Attic Chords (Top)------			
P -R	0.04	199 T	0.02 0.02
R -E	0.05	196 T	0.02 0.03
E -Q	0.05	201 T	0.02 0.03
-------Attic Webs (Top)-------			
R -B	0.01	46 T	
B -E	0.02	83 T	
E -C	0.01	74 T	

TL Defl -1.16" in I -H L/496
LL Defl -0.89" in I -H L/643
Shear // Grain in S1-H 0.49

Plates for each ply each face.
Plate - MT20 20 Ga, Gross Area
Plate - MT2H 20 Ga, Gross Area

Jt	Type	Plt Size	X	Y	JSI
A	MT20	4.0x 6.0	Ctr	-0.3	0.82
EE	MT20	3.0x 7.0	Ctr	Ctr	0.44
S2	MT20	5.0x 7.0	-0.2	0.5	0.86
L#	MT20	3.0x 7.0	Ctr	-0.5	0.35
P	MT20	3.0x 7.0	Ctr	Ctr	0.35
B	MT20	5.0x 9.0	0.8	-3.5	0.80
C	MT20	5.0x 7.0	-0.8	-3.2	0.75
Q	MT20	3.0x 7.0	Ctr	Ctr	0.35
M#	MT20	3.0x 7.0	Ctr	-0.5	0.35
AA	MT20	5.0x 7.0	0.2	0.5	0.86
BB	MT20	3.0x 7.0	Ctr	Ctr	0.44
D	MT20	4.0x 6.0	Ctr	-0.3	0.82
DD	MT20	2.0x 4.0	Ctr	Ctr	0.52
CC#	MT20	6.0x12.0	Ctr	-0.5	0.75
I#	MT20	6.0x 6.0	Ctr	-0.6	0.46
S1	MT20	7.0x 8.0	Ctr	Ctr	0.88
H#	MT20	6.0x 6.0	Ctr	-0.6	0.46
Z#	MT20	6.0x12.0	Ctr	Ctr	0.87
Y	MT20	2.0x 4.0	Ctr	Ctr	0.52
R	MT20	2.0x 4.0	Ctr	Ctr	0.52
E	MT20	3.0x 7.0	Ctr	Ctr	0.92

= Plate Monitor used
9 Gable studs to be attached with 2.0x4.0 plates each end.

REVIEWED BY:
Robbins Engineering, Inc.
6904 Parke East Blvd.
Tampa, FL 33610

REFER TO ROBBINS ENG. GENERAL NOTES AND SYMBOLS SHEET FOR ADDITIONAL SPECIFICATIONS.

NOTES:
Trusses Manufactured by:
Mayo Truss Co. Inc.
Analysis Conforms To:
FBC2004
WARNING Do Not Cut overframe member between outside of truss and first tie-plate to inside of heel plate.
Design checked for 10 psf non-concurrent LL on BC.
Refer to Gen Det 3 series for web bracing and plating.
NOTE: USER MODIFIED PLATES
This design may have plates selected through a plate monitor.
Wind Loads - ANSI / ASCE 7-02
Truss is designed as
Components and Claddings* for Exterior zone location.
Wind Speed: 110 mph
Mean Roof Height: 15-0

Exposure Category: B
Occupancy Factor : 1.00
Building Type: Enclosed
TC Dead Load: 5.0 psf
BC Dead Load: 5.0 psf
Unbalanced Loads Checked
Load Factors = 1.00 and 0.00
Max comp. force 764 Lbs
Max tens. force 465 Lbs
Quality Control Factor 1.25

Philip J. O'Regan, FL Lic. #58126
Robbins Engineering
6904 Parke East Blvd
Tampa, FL, 33610
FL Cert.#5555

Job	Mark	Quan	Type	Span	P1-H1	Left OH	Right OH	Engineering
LEEBLATTER	AG1	1*2P	SP	471008	6	0	2- 0- 0	T2668826

LEE & ANGIE BLATTER

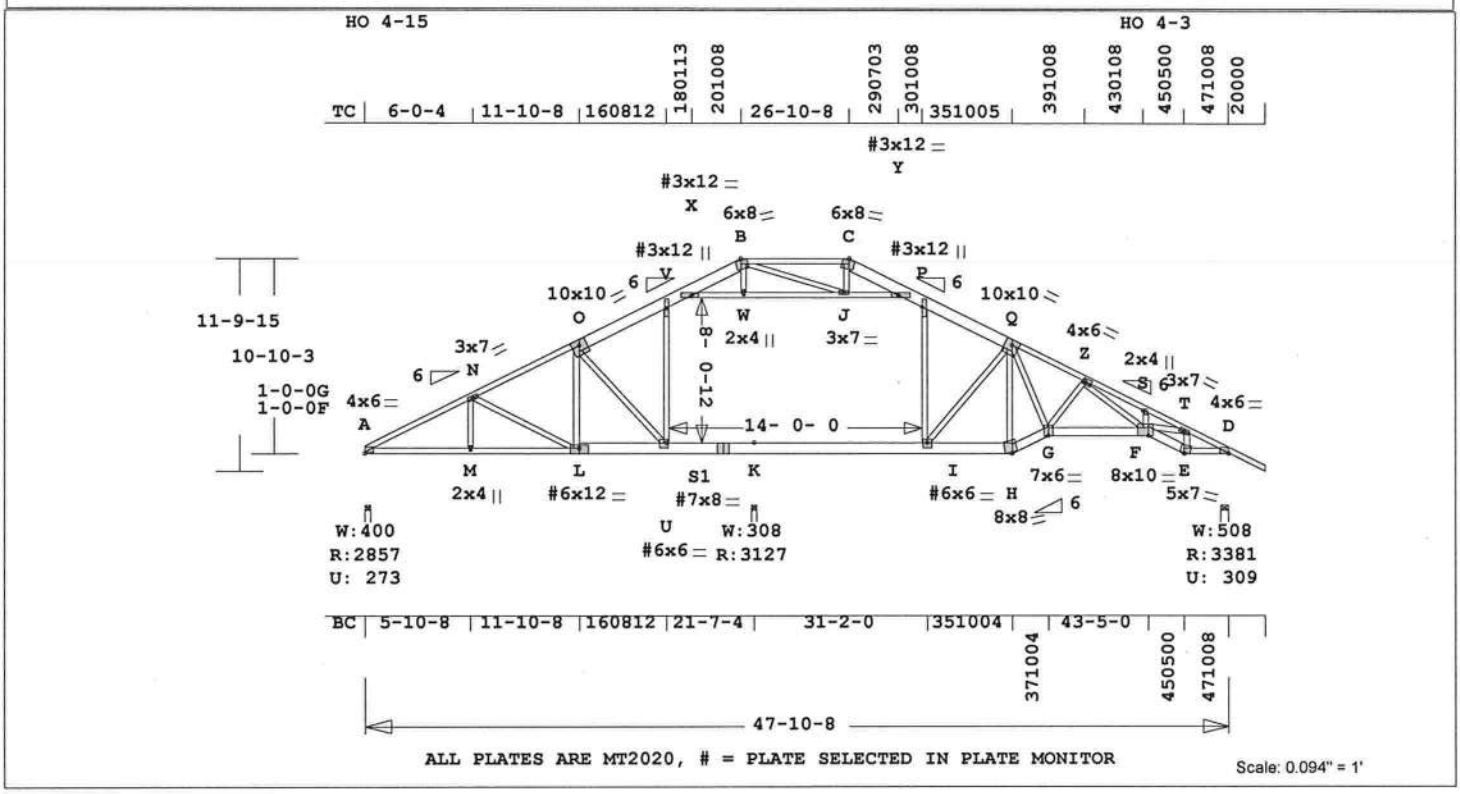

ALL PLATES ARE MT2020, # = PLATE SELECTED IN PLATE MONITOR

Scale: 0.094" = 1'

Robbins Engineering, Inc./Online Plus™ APPROX. TRUSS WEIGHT: 454.5 LBS

Online Plus -- Version 21.0.060
RUN DATE: 06-SEP-07
****
* 2-Ply Truss *
****

	CSI	-Size-	----Lumber----
TC	0.87	2x 4	SP-#1
--	0.51	2x 4	SP-#2
	A -O	B -C	
--	0.83	2x 8	SP-#2
	O -B		
--	0.55	2x 8	SP-2401
	C -Q		
BC	0.93	2x 8	SP-2401
--	0.82	2x 4	SP-#2
	A -L		
--	0.88	2x 6	SP-#2
	H -G	G -F	F -E
--	0.78	2x 4	SP-#1
	E -D		
WB	0.58	2x 4	SP-#2
ACT	0.16	2x 4	SP-#2
AWT	0.14	2x 4	SP-#2

Brace truss as follows:

	O.C.	From	To
TC	24.0"	0- 0- 0	20-10- 8
TC	24.0"	20-10- 8	26-10- 8
TC	24.0"	26-10- 8	47-10- 8
BC	24.0"	0- 0- 0	47-10- 8

psf-Ld	Dead	Live
TC	10.0	20.0
BC	10.0	0.0
TC+BC	20.0	20.0

Total 40.0 Spacing 42.0"
Lumber Duration Factor 1.00
Plate Duration Factor 1.00
TC Fb=1.00 Fc=1.00 Ft=1.00
BC Fb=1.00 Fc=1.00 Ft=1.00

Total Load Reactions (Lbs)

Jt	Down	Uplift	Horiz-
A	2857	274 U	404 R
K	3127		
D	3381	309 U	405 R

Jt	Brg Size	Required
A	4.0"	1.7"
K	3.5"	1.5"
D	5.5"	2.0"

LC# 1 Attic Loading
Dur Fctrs - Lbr 1.00 Plt 1.00

plf - Dead	Live*	From	To
TC V 35	70	0.0'	47.9'
BC V 35	0	0.0'	47.9'
TC V 18	0	16.9'	17.9'
TC V 18	0	29.9'	30.9'
BC V 18	140	16.9'	30.9'
MA V 18	0	18.2'	29.6'
MA V 18	0	0.3'	8.1'
MA V 18	0	0.3'	8.1'

Plus 9 Wind Load Case(s)
Plus 2 Unbalanced Load Cases
Plus 1 UBC LL Load Case(s)

Membr	CSI	P Lbs	Axl-CSI-Bnd		
----------Top Chords----------					
A -N	0.51	5210	C	0.09	0.42
N -O	0.46	4570	C	0.11	0.35
O -V	0.64	3800	C	0.01	0.63
V -X	0.83	3593	C	0.00	0.83
X -B	0.83	1105	C	0.00	0.83
B -C	0.33	1621	C	0.00	0.33
C -Y	0.39	1550	C	0.00	0.39
Y -P	0.55	3386	C	0.00	0.55
P -Q	0.55	4092	C	0.00	0.55
Q -Z	0.35	6793	C	0.10	0.25
Z -S	0.87	11899	C	0.43	0.44
S -T	0.78	12025	C	0.40	0.38
T -D	0.35	6365	C	0.10	0.25
--------Bottom Chords---------					
A -M	0.82	4643	T	0.53	0.29
M -L	0.71	4644	T	0.53	0.18
L -U	0.36	4116	T	0.08	0.28
U -S1	0.47	3489	T	0.07	0.40
S1-K	0.93	3489	T	0.08	0.85
K -I	0.93	3489	T	0.08	0.85
I -H	0.58	4712	T	0.10	0.48
H -G	0.63	5089	T	0.42	0.21
G -F	0.70	6945	T	0.58	0.12
F -E	0.88	6141	T	0.51	0.37
E -D	0.78	5620	T	0.50	0.28
----------Webs----------					
M -N	0.02	294	T		
N -L	0.05	619	C		
L -O	0.09	830	T		
O -U	0.13	1311	C		
U -V	0.03	423	T		
I -P	0.16	1522	T		
I -Q	0.21	2170	C		
H -Q	0.10	1359	C		
Q -G	0.40	3471	T		
G -Z	0.08	1355	C		
Z -F	0.55	4785	T		
F -S	0.01	168	T		
F -T	0.58	5090	T		
E -T	0.13	2388	C		
------Attic Chords (Top)------					
X -W	0.16	2775	C	0.16	0.00
W -J	0.12	2783	C	0.09	0.03
J -Y	0.11	2035	C	0.11	0.00
-------Attic Webs (Top)-------					
W -B	0.01	115	T		
B -J	0.14	1251	T		
J -C	0.01	299	C		

TL Defl -0.95" in I -H L/322
LL Defl -0.61" in K -I L/502

Hz Disp	LL	DL	TL
Jt D	0.14"	0.11"	0.25"
Shear // Grain		in K -I	0.59

Plates for each ply each face.
Plate - MT20 20 Ga, Gross Area
Plate - MT2H 20 Ga, Gross Area

Jt	Type	Plt Size	X	Y	JSI
A	MT20	4.0x 6.0	0.5	0.3	0.89
N	MT20	3.0x 7.0	Ctr	Ctr	0.44
O	MT20	10.0x10.0	0.7-1.3		0.75
V#	MT20	3.0x12.0	Ctr	Ctr	0.35
X#	MT20	3.0x12.0	-1.6	Ctr	0.35
B	MT20	6.0x 8.0	0.9-3.8		0.91
C	MT20	6.0x 8.0	-0.9-3.8		0.75
Y#	MT20	3.0x12.0	1.6	Ctr	0.35
P#	MT20	3.0x12.0	Ctr	Ctr	0.35
Q	MT20	10.0x10.0	-0.7-1.3		0.75
Z	MT20	4.0x 6.0	Ctr	Ctr	0.95
S	MT20	2.0x 4.0	Ctr	Ctr	0.52
T	MT20	3.0x 7.0	Ctr	Ctr	0.94
D	MT20	4.0x 6.0	Ctr	0.1	0.85
M	MT20	2.0x 4.0	Ctr	Ctr	0.52
L#	MT20	6.0x12.0	Ctr-0.5		0.75
U#	MT20	6.0x 6.0	Ctr-0.6		0.46
S1#	MT20	7.0x 8.0	Ctr	Ctr	0.68
I#	MT20	6.0x 6.0	Ctr-0.6		0.46
H	MT20	8.0x 8.0	-1.1	4.8	0.56
G	MT20	7.0x 6.0	Ctr-2.0		0.92
F	MT20	8.0x10.0	Ctr-1.5		0.70
E	MT20	5.0x 7.0	0.8	3.2	0.75
W	MT20	2.0x 4.0	Ctr	Ctr	0.52
J	MT20	3.0x 7.0	Ctr	Ctr	0.92

= Plate Monitor used

REVIEWED BY:
Robbins Engineering, Inc.
6904 Parke East Blvd.
Tampa, FL 33610

REFER TO ROBBINS ENG. GENERAL NOTES AND SYMBOLS SHEET FOR ADDITIONAL SPECIFICATIONS.
NOTES:
Trusses Manufactured by:
Mayo Truss Co. Inc.
Analysis Conforms To:
FBC2004
2 COMPLETE TRUSSES REQUIRED.
Fasten together in staggered pattern. (1/2" bolts -OR- SDS3 screws -OR- 10d nails as each layer is applied.)

	Rows	Nails	Spacing (In) Screws	Bolts
TC	1	12	24	0
BC	1	12	24	0
WB	1	8	8	

OH Loading
Soffit psf 2.0

Design checked for 10 psf non-concurrent LL on BC.
NOTE: USER MODIFIED PLATES This design may have plates selected through a plate monitor.
Wind Loads - ANSI / ASCE 7-02
Truss is designed as Components and Claddings* for Exterior zone location.
Wind Speed: 110 mph
Mean Roof Height: 15-0
Exposure Category: B
Occupancy Factor : 1.00
Building Type: Enclosed
TC Dead Load: 5.0 psf
BC Dead Load: 5.0 psf
Unbalanced Loads Checked
Load Factors = 1.00 and 0.00
Max comp. force 12025 Lbs
Max tens. force 6945 Lbs
Quality Control Factor 1.25

Philip J. O'Regan, FL Lic. #58126
Robbins Engineering
6904 Parke East Blvd
Tampa, FL, 33610
FL Cert.#5555

Job	Mark	Quan	Type	Span	P1-H1	Left OH	Right OH	Engineering
LEEBLATTER	AG2	1*2P	SP	471008	6	0	2- 0- 0	T2668827

LEE & ANGIE BLATTER

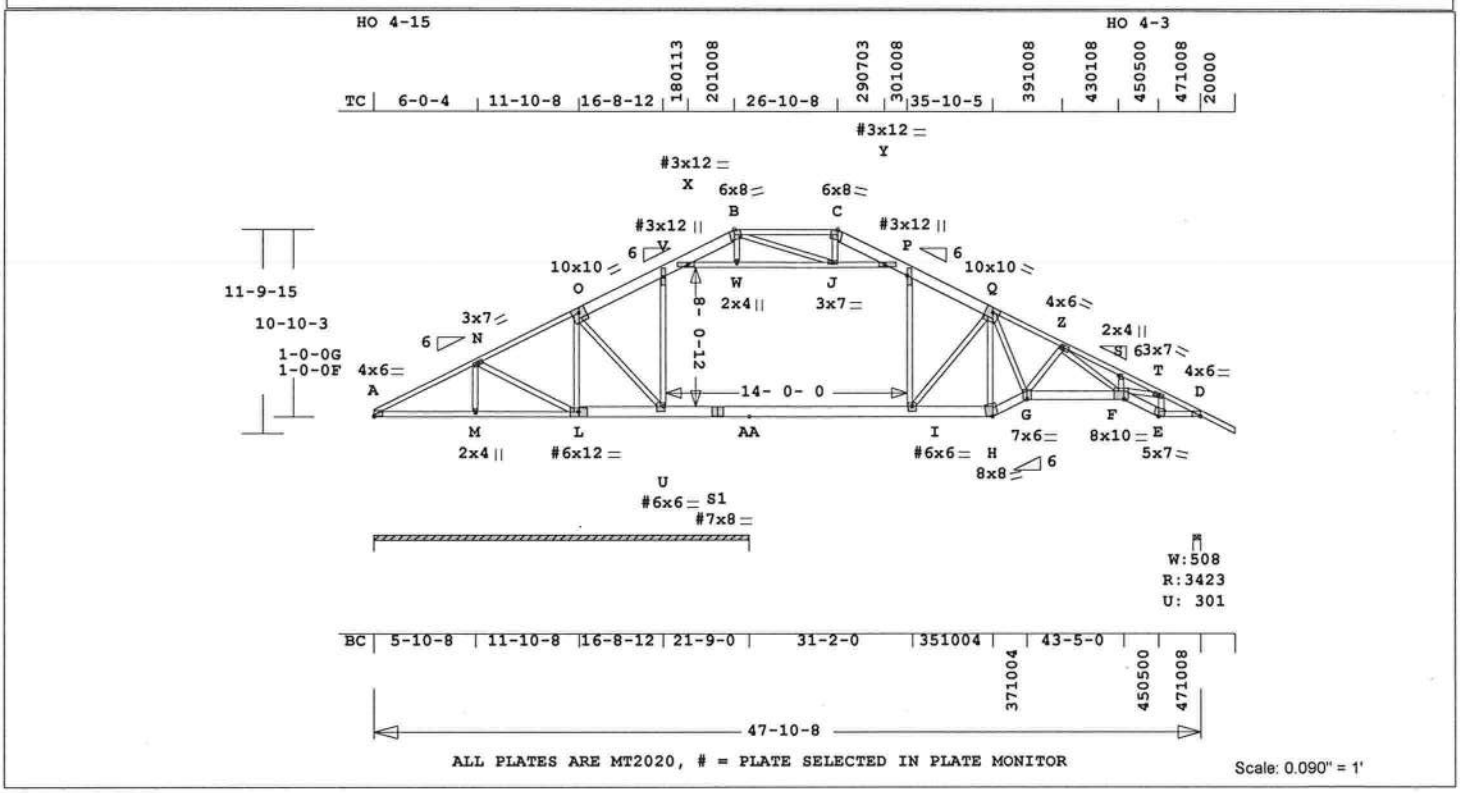

ALL PLATES ARE MT2020, # = PLATE SELECTED IN PLATE MONITOR

Scale: 0.090" = 1'

Robbins Engineering, Inc./Online Plus™ APPROX. TRUSS WEIGHT: 454.5 LBS

Online Plus -- Version 21.0.060
RUN DATE: 06-SEP-07
****
* 2-Ply Truss *
****

	CSI	-Size-	----Lumber----
TC	0.88	2x 4	SP-#1
--	0.43	2x 4	SP-#2
	A -O	B -C	
--	0.56	2x 8	SP-#2
	O -B		
--	0.37	2x 8	SP-2401
	C -Q		
BC	0.92	2x 8	SP-2401
--	0.17	2x 4	SP-#2
	A -L		
--	0.90	2x 6	SP-#2
	H -G	G -F	F -E
--	0.79	2x 4	SP-#1
	E -D		
WB	0.59	2x 4	SP-#2
ACT	0.17	2x 4	SP-#2
AWT	0.08	2x 4	SP-#2

Brace truss as follows:

	O.C.	From	To
TC	24.0"	0- 0- 0	20-10- 8
TC	24.0"	20-10- 8	26-10- 8
TC	24.0"	26-10- 8	47-10- 8
BC	24.0"	0- 0- 0	47-10- 8

psf-Ld	Dead	Live
TC	10.0	20.0
BC	10.0	0.0
TC+BC	20.0	20.0

Total 40.0 Spacing 42.0"
Lumber Duration Factor 1.00
Plate Duration Factor 1.00
TC Fb=1.00 Fc=1.00 Ft=1.00
BC Fb=1.00 Fc=1.00 Ft=1.00

Total Load Reactions (Lbs)

Jt	Down	Uplift	Horiz-
AA	5942	251 U	404 R
D	3424	302 U	405 R

Jt	Brg Size	Required
AA	261.0"	0"-to- 261"
D	5.5"	2.0"

LC# 1 Attic Loading
Dur Fctrs - Lbr 1.00 Plt 1.00

plf -	Dead	Live*	From	To
TC V	35	70	0.0'	47.9'
BC V	35	0	0.0'	47.9'
TC V	18	0	16.9'	17.9'
TC V	18	0	29.9'	30.9'
BC V	18	140	16.9'	30.9'
MA V	18	0	18.2'	29.6'
MA V	18	0	0.3'	8.1'
MA V	18	0	0.3'	8.1'

Plus 9 Wind Load Case(s)
Plus 2 Unbalanced Load Cases
Plus 1 UBC LL Load Case(s)

Membr	CSI	P Lbs		Axl-CSI-Bnd	
----------Top Chords----------					
A -N	0.41	1979	C	0.01	0.40
N -O	0.43	3028	C	0.03	0.40
O -V	0.33	3987	C	0.01	0.32
V -X	0.56	3709	C	0.01	0.55
X -B	0.55	1079	C	0.00	0.55
B -C	0.32	1382	C	0.00	0.32
C -Y	0.20	1413	C	0.00	0.20
Y -P	0.37	3534	C	0.00	0.37
P -Q	0.37	4235	C	0.00	0.37
Q -Z	0.33	6910	C	0.12	0.21
Z -S	0.88	12073	C	0.44	0.44
S -T	0.81	12201	C	0.42	0.39
T -D	0.36	6455	C	0.10	0.26
--------Bottom Chords---------					
A -M	0.17	307	T	0.00	0.17
M -L	0.17	307	T	0.00	0.17
L -U	0.02	861	T	0.00	0.02
U -S1	0.02	1315	T	0.00	0.02
S1-AA	0.84	1315	T	0.00	0.84
AA-I	0.92	3637	T	0.08	0.84
I -H	0.49	4795	T	0.11	0.38
H -G	0.64	5180	T	0.43	0.21
G -F	0.71	7059	T	0.59	0.12
F -E	0.90	6227	T	0.52	0.38
E -D	0.79	5699	T	0.51	0.28
----------Webs----------					
M -N	0.09	1534	C		
N -L	0.14	1237	T		
L -O	0.15	1924	C		
O -U	0.17	1527	T		
U -V	0.08	706	T		
I -P	0.14	1456	T		
I -Q	0.18	1862	C		
H -Q	0.10	1458	C		
Q -G	0.40	3525	T		
G -Z	0.08	1369	C		
Z -F	0.55	4840	T		
F -S	0.01	171	T		
F -T	0.59	5167	T		
E -T	0.14	2422	C		
------Attic Chords (Top)------					
X -W	0.17	2966	C	0.17	0.00
W -J	0.13	2975	C	0.09	0.04
J -Y	0.13	2255	C	0.13	0.00
-------Attic Webs (Top)-------					
W -B	0.01	111	T		
B -J	0.08	771	T		
J -C	0.01	198	T		

TL Defl -0.75" in I -H L/410
LL Defl -0.43" in AA-I L/724

Hz Disp	LL	DL	TL
Jt D	0.12"	0.09"	0.20"

Shear // Grain in S1-AA 0.90

Plates for each ply each face.
Plate - MT20 20 Ga, Gross Area
Plate - MT2H 20 Ga, Gross Area

Jt	Type	Plt Size	X	Y	JSI
A	MT20	4.0x 6.0	0.5	0.3	0.89
N	MT20	3.0x 7.0	Ctr	Ctr	0.44
O	MT20	10.0x10.0	0.7-1.3		0.75
V#	MT20	3.0x12.0	Ctr	Ctr	0.35
X#	MT20	3.0x12.0-1.6		Ctr	0.35
B	MT20	6.0x 8.0	0.9-3.8		0.91
C	MT20	6.0x 8.0-0.9-3.8			0.75
Y#	MT20	3.0x12.0	1.6	Ctr	0.35
P#	MT20	3.0x12.0	Ctr	Ctr	0.35
Q	MT20	10.0x10.0-0.7-1.3			0.75
Z	MT20	4.0x 6.0	Ctr	Ctr	0.96
S	MT20	2.0x 4.0	Ctr	Ctr	0.52
T	MT20	3.0x 7.0	Ctr	Ctr	0.96
D	MT20	4.0x 6.0	Ctr	0.1	0.86
M	MT20	2.0x 4.0	Ctr	Ctr	0.52
L#	MT20	6.0x12.0	Ctr-0.5		0.75
U#	MT20	6.0x 6.0	Ctr-0.6		0.46
S1#	MT20	7.0x 8.0	Ctr	Ctr	0.47
I#	MT20	6.0x 6.0	Ctr-0.6		0.46
H	MT20	8.0x 8.0-1.1		4.8	0.56
G	MT20	7.0x 6.0	Ctr-2.0		0.93
F	MT20	8.0x10.0	Ctr-1.5		0.71
E	MT20	5.0x 7.0	0.8	3.2	0.75
W	MT20	2.0x 4.0	Ctr	Ctr	0.52
J	MT20	3.0x 7.0	Ctr	Ctr	0.92

= Plate Monitor used

REVIEWED BY:
Robbins Engineering, Inc.
6904 Parke East Blvd.
Tampa, FL 33610

REFER TO ROBBINS ENG. GENERAL NOTES AND SYMBOLS SHEET FOR ADDITIONAL SPECIFICATIONS.
NOTES:
Trusses Manufactured by:
Mayo Truss Co. Inc.
Analysis Conforms To:
FBC2004
2 COMPLETE TRUSSES REQUIRED.
Fasten together in staggered pattern. (1/2" bolts -OR- SDS3 screws -OR- 10d nails as each layer is applied.)

	Rows	Nails	----Spacing (In)---- Screws	Bolts
TC	1	12	24	0
BC	1	12	24	0
WB	1	8	8	

OH Loading
Soffit psf 2.0
Design checked for 10 psf non-concurrent LL on BC.

NOTE: USER MODIFIED PLATES
This design may have plates selected through a plate monitor.
Wind Loads - ANSI / ASCE 7-02
Truss is designed as Components and Claddings* for Exterior zone location.
Wind Speed: 110 mph
Mean Roof Height: 15-0
Exposure Category: B
Occupancy Factor : 1.00
Building Type: Enclosed
TC Dead Load: 5.0 psf
BC Dead Load: 5.0 psf
Unbalanced Loads Checked
Load Factors = 1.00 and 0.00
Max comp. force 12201 Lbs
Max tens. force 7059 Lbs
Quality Control Factor 1.25

Philip J. O'Regan, FL Lic. #58126
Robbins Engineering
6904 Parke East Blvd
Tampa, FL, 33610
FL Cert.#5555

Job	Mark	Quan	Type	Span	P1-H1	Left OH	Right OH	Engineering
LEEBLATTER	AG3	2*3P	SP	480000	6	2- 0- 0	2- 0- 0	T2668828

LEE & ANGIE BLATTER

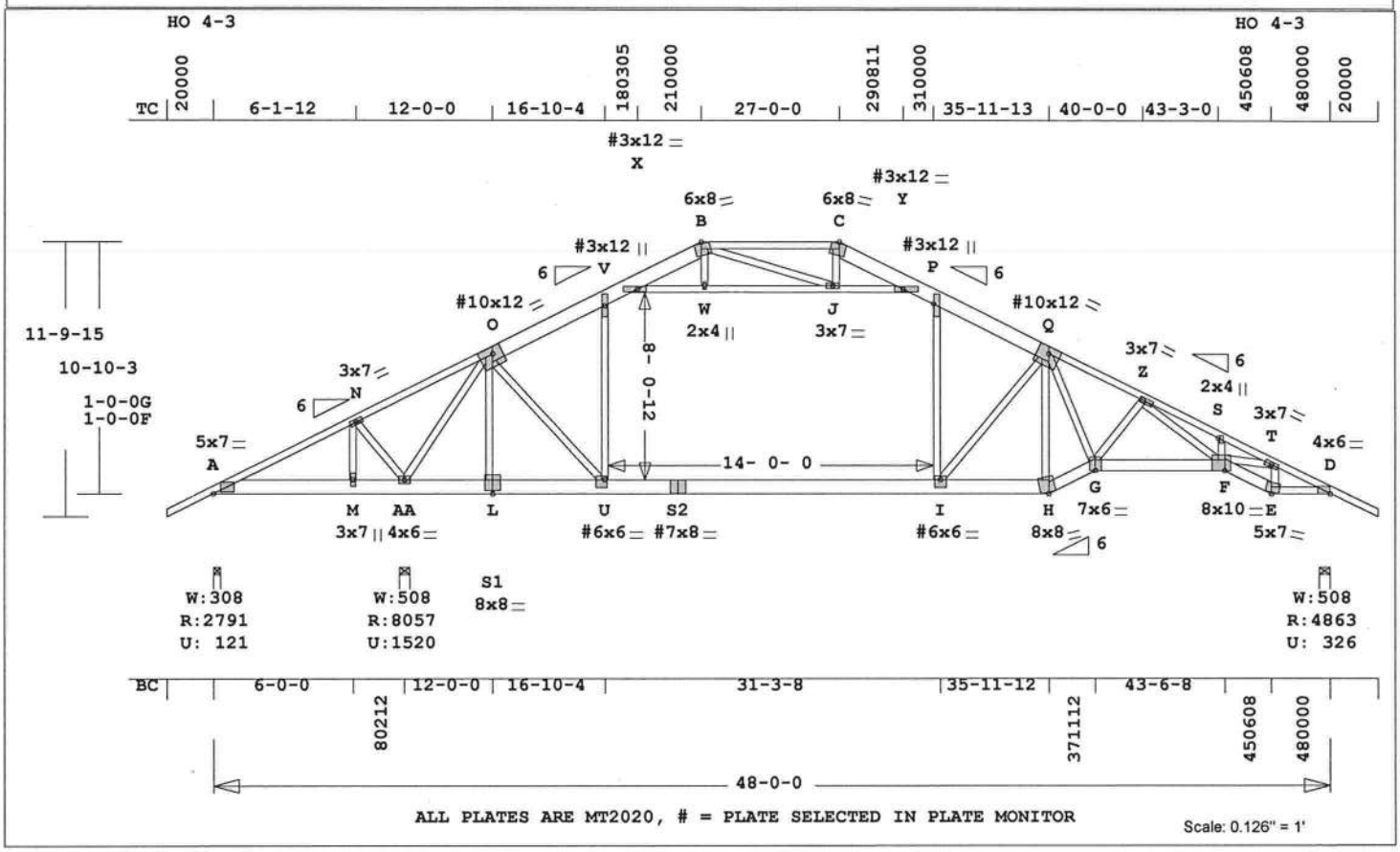

ALL PLATES ARE MT2020, # = PLATE SELECTED IN PLATE MONITOR

Scale: 0.126" = 1'

Robbins Engineering, Inc./Online Plus™ APPROX. TRUSS WEIGHT: 487.0 LBS

```
Online Plus -- Version 21.0.060
RUN DATE: 06-SEP-07
***************
* 3-Ply Truss *
***************

     CSI -Size- ----Lumber----
TC  0.56  2x 8  SP-#2
--  0.34  2x 4  SP-#2
    A -O   B -C
--  0.54  2x 4  SP-#1
    Q -D
BC  0.64  2x 6  SP-#2
--  0.60  2x 8  SP-2401
    A -S1  S1-S2  S2-H
--  0.56  2x 4  SP-#1
    E -D
WB  0.47  2x 4  SP-#2
ACT 0.16  2x 4  SP-#2
AWT 0.06  2x 4  SP-#2

Brace truss as follows:
      O.C.      From       To
 TC   24.0"   0- 0- 0 21- 0- 0
 TC   24.0"  21- 0- 0 27- 0- 0
 TC   24.0"  27- 0- 0 48- 0- 0
 BC   24.0"   0- 0- 0 48- 0- 0

psf-Ld  Dead  Live
TC      10.0  20.0
BC      10.0   0.0
TC+BC   20.0  20.0
Total   40.0   Spacing  48.0"
Lumber Duration Factor  1.00
Plate  Duration Factor  1.00
TC Fb=1.15  Fc=1.10  Ft=1.10
BC Fb=1.10  Fc=1.10  Ft=1.10

Total Load Reactions (Lbs)
Jt  Down  Uplift  Horiz-
A   2791   122 U   462 R
AA  8057  1520 U
D   4864   327 U   461 R

Jt   Brg Size   Required
A       3.5"       1.5"
AA      5.5"       2.1"
D       5.5"       1.9"

LC#  1  NonStandard Loading
Dur Fctrs - Lbr 1.00  Plt 1.00
plf - Dead  Live* From    To
TC V    40     0   0.0'  48.0'
BC V    40     0   0.0'  48.0'
TC V    20     0  17.0'  18.0'
TC V    20     0  30.0'  31.0'
BC V    20   160  17.0'  31.0'
MA V    20     0  18.3'  29.7'
MA V    20     0   0.3'   8.1'
MA V    20     0   0.3'   8.1'

LC#  2  Attic Loading
Dur Fctrs - Lbr 1.25  Plt 1.25
plf - Dead  Live* From    To
TC V    40    80   0.0'  48.0'
BC V    40     0   0.0'  48.0'
TC V   120     0   0.0'
        0     0         18.3'
BC V    20   160   0.0'  16.9'
TC V    20     0  17.0'  18.0'
TC V    20     0  30.0'  31.0'
BC V    20   160  17.0'  31.0'
MA V    20     0  18.3'  29.7'
MA V    20     0   0.3'   8.1'
MA V    20     0   0.3'   8.1'

Plus  9 Wind Load Case(s)
Plus  2 Unbalanced Load Cases
Plus  1 UBC LL Load Case(s)

Membr  CSI  P Lbs  Axl-CSI-Bnd
----------Top Chords----------
A -N  0.34  3182 C  0.00  0.34
N -O  0.34  2240 C  0.00  0.34
O -V  0.16  7026 C  0.01  0.15
V -X  0.44  6232 C  0.00  0.44
X -B  0.44  1078 C  0.00  0.44
B -C  0.17  1438 C  0.00  0.17
C -Y  0.22  1466 C  0.00  0.22
Y -P  0.55  5987 C  0.00  0.55
P -Q  0.56  7359 C  0.01  0.55
Q -Z  0.21 10550 C  0.11  0.10
Z -S  0.54 17765 C  0.24  0.30
S -T  0.47 17951 C  0.21  0.26
T -D  0.22  9406 C  0.05  0.17
--------Bottom Chords---------
A -M  0.13  2862 T  0.02  0.11
M -AA 0.11  2862 T  0.02  0.09
AA-S1 0.15  4256 T  0.04  0.11
S1-U  0.58  4256 T  0.04  0.54
U -S2 0.60  6359 T  0.06  0.54
S2-I  0.38  6359 T  0.06  0.32
I -H  0.19  7408 T  0.06  0.13
H -G  0.47  8031 T  0.32  0.15
G -F  0.52 10611 T  0.43  0.09
F -E  0.64  9060 T  0.36  0.28
E -D  0.56  8303 T  0.36  0.20
-------------Webs-------------
M -N  0.05  1029 T
N -AA 0.05  1867 C
AA-O  0.22  6097 C
S1-O  0.05  1330 C
O -U  0.19  3196 T
U -V  0.10  1791 T
I -P  0.17  2955 T
I -Q  0.06  1759 C
H -Q  0.10  3156 C
Q -G  0.31  5177 T
G -Z  0.05  1808 C
Z -F  0.42  6830 T
F -S  0.01   228 T
F -T  0.47  7684 T
E -T  0.10  3529 C
------Attic Chords (Top)------
X -W  0.16  5779 C  0.16  0.00
W -J  0.10  5790 C  0.08  0.02
J -Y  0.13  4921 C  0.13  0.00
-------Attic Webs (Top)-------
W -B  0.01   139 T
B -J  0.06  1126 T
J -C  0.00   247 C

TL Defl  -0.83" in U -I  L/565
LL Defl  -0.51" in U -I  L/926
Hz Disp   LL      DL      TL
  Jt D   0.13"   0.09"   0.22"
Shear // Grain  in Y -P   0.48

Plates for each ply each face.
Plate - MT20 20 Ga, Gross Area
Plate - MT2H 20 Ga, Gross Area
Jt Type  Plt Size  X    Y    JSI
A  MT20  5.0x 7.0 Ctr-0.3 0.75
N  MT20  3.0x 7.0 Ctr Ctr 0.49
O# MT20 10.0x12.0-0.2-1.8 0.75
V# MT20  3.0x12.0 Ctr Ctr 0.35
X# MT20  3.0x12.0-1.6 Ctr 0.36
B  MT20  6.0x 8.0 0.9-3.8 0.91
C  MT20  6.0x 8.0-0.9-3.8 0.75
Y# MT20  3.0x12.0 1.6 Ctr 0.35
P# MT20  3.0x12.0 Ctr Ctr 0.35
Q# MT20 10.0x12.0-0.7-1.3 0.75
Z  MT20  3.0x 7.0 Ctr Ctr 0.96
S  MT20  2.0x 4.0 Ctr Ctr 0.53
T  MT20  3.0x 7.0 Ctr Ctr 0.76
D  MT20  4.0x 6.0 Ctr 0.1 0.81
M  MT20  3.0x 7.0 Ctr Ctr 0.35
AA MT20  4.0x 6.0 Ctr Ctr 0.50
S1 MT20  8.0x 8.0 Ctr-1.5 0.59
U# MT20  6.0x 6.0 Ctr-1.0 0.46
S2#MT20  7.0x 8.0 Ctr Ctr 0.47
I# MT20  6.0x 6.0 Ctr-1.0 0.46
H  MT20  8.0x 8.0-1.1 4.8 0.56
G  MT20  7.0x 6.0 Ctr-2.0 0.74
F  MT20  8.0x10.0 Ctr-1.5 0.67
E  MT20  5.0x 7.0 0.8 3.2 0.75
W  MT20  2.0x 4.0 Ctr Ctr 0.53
J  MT20  3.0x 7.0 Ctr Ctr 0.93

# = Plate Monitor used

REVIEWED BY:
 Robbins Engineering, Inc.
 6904 Parke East Blvd.
 Tampa, FL  33610

REFER TO ROBBINS ENG. GENERAL
NOTES AND SYMBOLS SHEET FOR
ADDITIONAL SPECIFICATIONS.
NOTES:
Trusses Manufactured by:
  Mayo Truss Co. Inc.
Analysis Conforms To:
  FBC2004
3 COMPLETE TRUSSES REQUIRED.
Fasten together in staggered
  pattern.  (1/2" bolts -OR-
  SDS4.5 screws -OR- 16d nails
  as each layer is applied.)
          ----Spacing (In)----
   Rows  Nails  Screws  Bolts
 TC  1    12     23      0
 BC  1    12     19.5    0
 WB  1     8      8
Web Connection Exception --
Use 4" spacing for screws or
nails on the following webs
AA-O
  No bolts in 2x4s or smaller.
OH Loading
  Soffit psf 2.0
Design checked for 10 psf non-
  concurrent LL on BC.
NOTE: USER MODIFIED PLATES
  This design may have plates
  selected through a plate
  monitor.
Wind Loads - ANSI / ASCE 7-02
Truss is designed as
```


Philip J. O'Regan, FL Lic. #58126
Robbins Engineering
6904 Parke East Blvd
Tampa, FL, 33610
FL Cert.#5555

Job	Mark	Quan	Type	Span	P1-H1	Left OH	Right OH	Engineering
LEEBLATTER	*AG3*	2*3P	SP	480000	6	2- 0- 0	2- 0- 0	*T2668828*
LEE & ANGIE BLATTER								

Components and Claddings*
for Exterior zone location.
Wind Speed: 110 mph
Mean Roof Height: 15-0
Exposure Category: B
Occupancy Factor : 1.00
Building Type: Enclosed
TC Dead Load: 5.0 psf
BC Dead Load: 5.0 psf
Unbalanced Loads Checked
Load Factors = 1.00 and 0.00
Max comp. force 17951 Lbs
Max tens. force 10611 Lbs
Quality Control Factor 1.25

Job	Mark	Quan	Type	Span	P1-H1	Left OH	Right OH	Engineering
LEEBLATTER	B1	1	TR	290000	6	0	0	T2668829

LEE & ANGIE BLATTER

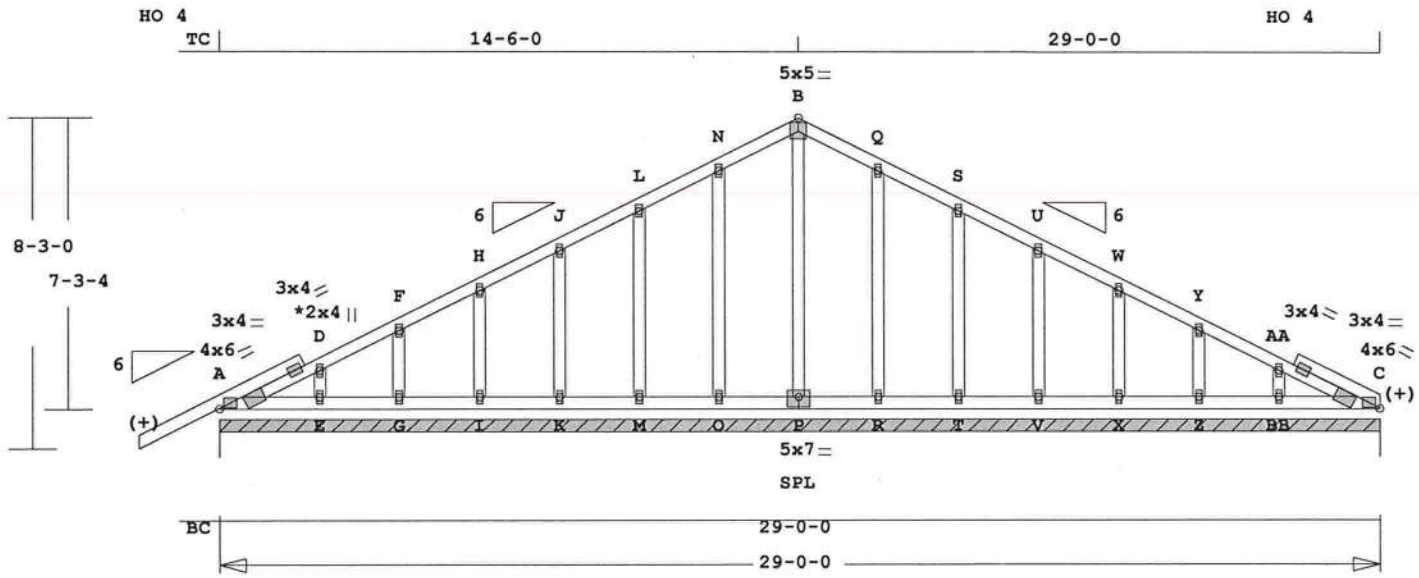

ALL PLATES ARE MT2020

See Joint D For Typical Gable Plate Size and Placement

Scale: 0.208" = 1'

Robbins Engineering, Inc./Online Plus™ APPROX. TRUSS WEIGHT: 212.6 LBS

Online Plus -- Version 21.0.060
RUN DATE: 06-SEP-07

	CSI	-Size-	----Lumber----
(+) TC	0.05	2x 4	SP-#2
BC	0.05	2x 4	SP-#2
GW	0.05	2x 4	SP-#2

Brace truss as follows:

	O.C.	From	To
TC	Cont.	0- 0- 0	29- 0- 0
BC	Cont.	0- 0- 0	29- 0- 0

psf-Ld	Dead	Live
TC	10.0	20.0
BC	10.0	0.0
TC+BC	20.0	20.0
Total	40.0	Spacing 24.0"

Lumber Duration Factor 1.25
Plate Duration Factor 1.25
TC Fb=1.15 Fc=1.10 Ft=1.10
BC Fb=1.10 Fc=1.10 Ft=1.10

Total Load Reactions (Lbs)

Jt	Down	Uplift	Horiz-
A	2320	309 U	139 R

Jt	Brg Size	Required
A	348.0"	0"-to- 348"

Plus 9 Wind Load Case(s)
Plus 1 UBC LL Load Case(s)

Membr	CSI	P Lbs	Axl-CSI-Bnd	
----------Top Chords----------				
A -D	0.04	154 C	0.00	0.04
D -F	0.04	105 C	0.00	0.04
F -H	0.03	59 C	0.00	0.03
H -J	0.03	53 T	0.00	0.03
J -L	0.03	110 T	0.00	0.03
L -N	0.04	168 T	0.02	0.02
N -B	0.05	222 T	0.02	0.03
B -Q	0.05	222 T	0.02	0.03
Q -S	0.04	168 T	0.01	0.03
S -U	0.03	110 T	0.00	0.03
U -W	0.03	53 T	0.00	0.03
W -Y	0.03	59 C	0.00	0.03
Y -AA	0.04	105 C	0.00	0.04
AA-C	0.04	154 C	0.00	0.04
--------Bottom Chords---------				
A -E	0.05	26 T	0.00	0.05
E -G	0.02	0 T	0.00	0.02
G -I	0.02	0 T	0.00	0.02
I -K	0.02	0 T	0.00	0.02
K -M	0.02	0 T	0.00	0.02
M -O	0.02	0 T	0.00	0.02
O -P	0.02	0 T	0.00	0.02
P -R	0.02	0 T	0.00	0.02
R -T	0.02	0 T	0.00	0.02
T -V	0.02	0 T	0.00	0.02
V -X	0.02	0 T	0.00	0.02
X -Z	0.02	0 T	0.00	0.02
Z -BB	0.02	0 T	0.00	0.02
BB-C	0.05	26 T	0.00	0.05
----------Gable Webs----------				
E -D	0.02	162 T		
G -F	0.02	171 T		
I -H	0.01	120 C		
K -J	0.02	119 C		
M -L	0.03	119 C		
O -N	0.05	175 T		
P -B	0.04	80 C		
R -Q	0.05	175 T		
T -S	0.03	119 C		
V -U	0.02	119 C		
X -W	0.01	120 C		
Z -Y	0.02	171 T		
BB-AA	0.02	162 T		

TL Defl 0.00" in A -E L/999
LL Defl 0.00" in A -E L/999
Shear // Grain in D -D 0.09

Plates for each ply each face.
Plate - MT20 20 Ga, Gross Area
Plate - MT2H 20 Ga, Gross Area

Jt	Type	Plt Size	X	Y	JSI
A	MT20	4.0x 6.0	Ctr	-0.3	0.64
D	MT20	2.0x 4.0	Ctr	Ctr	0.00
F	MT20	2.0x 4.0	Ctr	Ctr	0.00
H	MT20	2.0x 4.0	Ctr	Ctr	0.00
J	MT20	2.0x 4.0	Ctr	Ctr	0.00
L	MT20	2.0x 4.0	Ctr	Ctr	0.00
N	MT20	2.0x 4.0	Ctr	Ctr	0.00
B	MT20	5.0x 5.0	Ctr	Ctr	0.61
Q	MT20	2.0x 4.0	Ctr	Ctr	0.00
S	MT20	2.0x 4.0	Ctr	Ctr	0.00
U	MT20	2.0x 4.0	Ctr	Ctr	0.00
W	MT20	2.0x 4.0	Ctr	Ctr	0.00
Y	MT20	2.0x 4.0	Ctr	Ctr	0.00
AA	MT20	2.0x 4.0	Ctr	Ctr	0.00
C	MT20	4.0x 6.0	Ctr	-0.3	0.64
E	MT20	2.0x 4.0	Ctr	Ctr	0.00
G	MT20	2.0x 4.0	Ctr	Ctr	0.00
I	MT20	2.0x 4.0	Ctr	Ctr	0.00
K	MT20	2.0x 4.0	Ctr	Ctr	0.00
M	MT20	2.0x 4.0	Ctr	Ctr	0.00
O	MT20	2.0x 4.0	Ctr	Ctr	0.00
P	MT20	5.0x 7.0	Ctr	-0.5	0.68
R	MT20	2.0x 4.0	Ctr	Ctr	0.00
T	MT20	2.0x 4.0	Ctr	Ctr	0.00
V	MT20	2.0x 4.0	Ctr	Ctr	0.00
X	MT20	2.0x 4.0	Ctr	Ctr	0.00
Z	MT20	2.0x 4.0	Ctr	Ctr	0.00
BB	MT20	2.0x 4.0	Ctr	Ctr	0.00

REVIEWED BY:

Robbins Engineering, Inc.
6904 Parke East Blvd.
Tampa, FL 33610

REFER TO ROBBINS ENG. GENERAL NOTES AND SYMBOLS SHEET FOR ADDITIONAL SPECIFICATIONS.
NOTES:
Trusses Manufactured by:
Mayo Truss Co. Inc.
Analysis Conforms To:
FBC2004
WARNING Do Not Cut overframe member between outside of truss and first tie-plate to inside of heel plate.
Design checked for 10 psf non-concurrent LL on BC.
Refer to Gen Det 3 series for web bracing and plating.
Wind Loads - ANSI / ASCE 7-02
Truss is designed as Components and Claddings* for Exterior zone location.
Wind Speed: 110 mph
Mean Roof Height: 15-0
Exposure Category: B
Occupancy Factor : 1.00
Building Type: Enclosed
TC Dead Load: 5.0 psf
BC Dead Load: 5.0 psf
Max comp. force 154 Lbs
Max tens. force 222 Lbs
Quality Control Factor 1.25

Philip J. O'Regan, FL Lic. #58126
Robbins Engineering
6904 Parke East Blvd
Tampa, FL, 33610
FL Cert.#5555

Job	Mark	Quan	Type	Span	P1-H1	Left OH	Right OH	Engineering
LEEBLATTER	C1	1	TR	230000	6	0	0	T2668830

LEE & ANGIE BLATTER

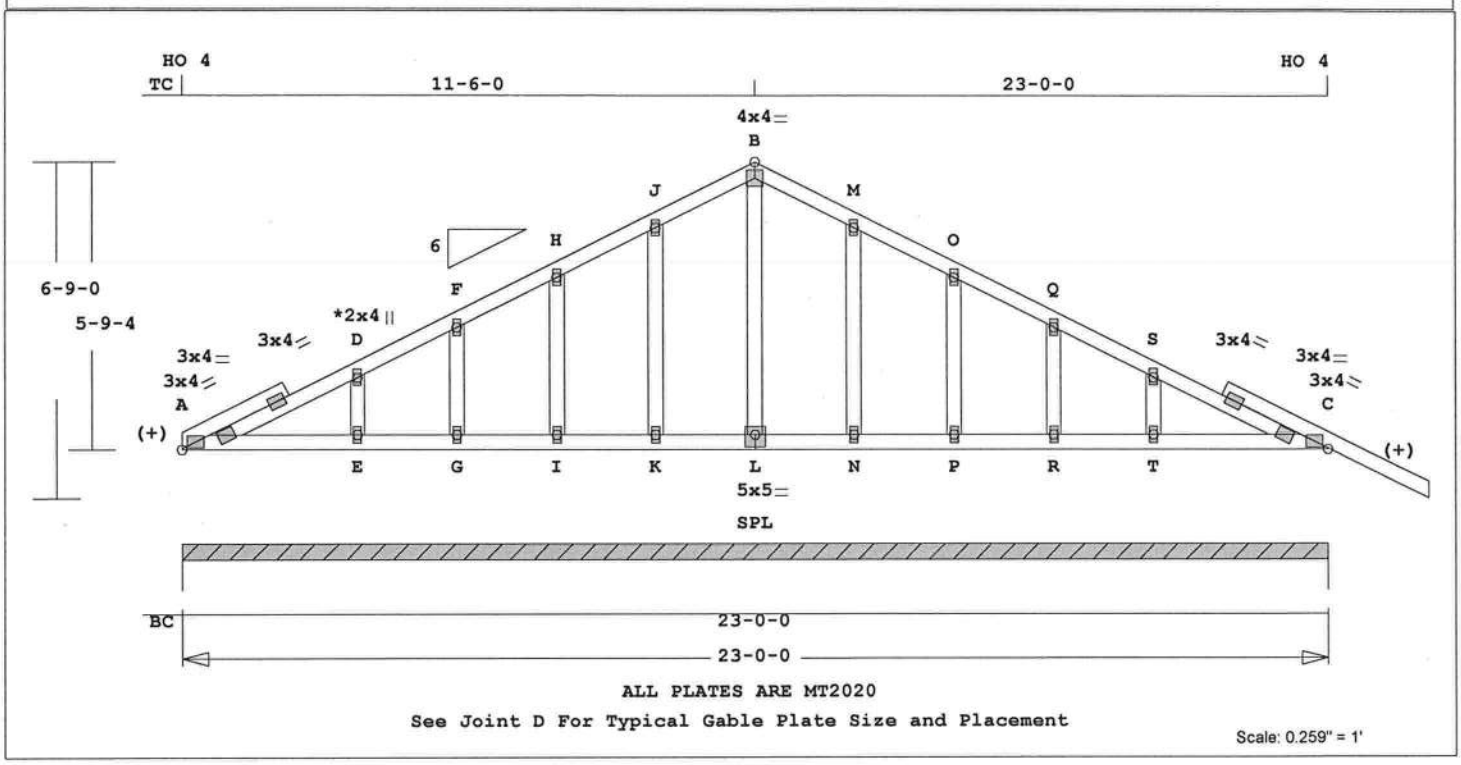

ALL PLATES ARE MT2020

See Joint D For Typical Gable Plate Size and Placement

Scale: 0.259" = 1'

Robbins Engineering, Inc./Online Plus™ APPROX. TRUSS WEIGHT: 153.8 LBS

Online Plus -- Version 21.0.060
RUN DATE: 06-SEP-07

	CSI	-Size-	----Lumber----
(+) TC	0.07	2x 4	SP-#2
BC	0.08	2x 4	SP-#2
GW	0.03	2x 4	SP-#2

Brace truss as follows:

	O.C.	From	To
TC	Cont.	0- 0- 0	23- 0- 0
BC	Cont.	0- 0- 0	23- 0- 0

psf-Ld	Dead	Live
TC	10.0	20.0
BC	10.0	0.0
TC+BC	20.0	20.0

Total 40.0 Spacing 24.0"
Lumber Duration Factor 1.25
Plate Duration Factor 1.25
TC Fb=1.15 Fc=1.10 Ft=1.10
BC Fb=1.10 Fc=1.10 Ft=1.10

Total Load Reactions (Lbs)

Jt	Down	Uplift	Horiz-
A	1840	245 U	104 R

Jt	Brg Size	Required
A	276.0"	0"-to- 276"

Plus 9 Wind Load Case(s)
Plus 1 UBC LL Load Case(s)

Membr	CSI	P Lbs	Axl-CSI-Bnd	
----------Top Chords----------				
A -D	0.07	77 C	0.00	0.07
D -F	0.07	95 C	0.00	0.07
F -H	0.03	97 T	0.00	0.03
H -J	0.04	156 T	0.02	0.02
J -B	0.05	211 T	0.02	0.03
B -M	0.05	211 T	0.02	0.03
M -O	0.04	156 T	0.01	0.03
O -Q	0.03	97 T	0.00	0.03
Q -S	0.07	95 C	0.00	0.07
S -C	0.07	77 C	0.00	0.07
--------Bottom Chords---------				
A -E	0.08	13 T	0.00	0.08
E -G	0.04	0 T	0.00	0.04
G -I	0.02	0 T	0.00	0.02
I -K	0.02	0 T	0.00	0.02
K -L	0.02	0 T	0.00	0.02
L -N	0.02	0 T	0.00	0.02
N -P	0.02	0 T	0.00	0.02
P -R	0.02	0 T	0.00	0.02
R -T	0.04	0 T	0.00	0.04
T -C	0.08	13 T	0.00	0.08
----------Gable Webs----------				
E -D	0.02	179 T		
G -F	0.01	106 C		
I -H	0.02	122 C		
K -J	0.03	177 T		
L -B	0.02	72 C		
N -M	0.03	177 T		
P -O	0.02	122 C		
R -Q	0.01	106 C		
T -S	0.02	179 T		

TL Defl 0.00" in A -E L/999
LL Defl 0.00" in A -E L/999
Shear // Grain in A -D 0.11

Plates for each ply each face.
Plate - MT20 20 Ga, Gross Area
Plate - MT2H 20 Ga, Gross Area

Jt	Type	Plt Size	X	Y	JSI
A	MT20	3.0x 4.0	Ctr	Ctr	0.81
D	MT20	2.0x 4.0	Ctr	Ctr	0.00
F	MT20	2.0x 4.0	Ctr	Ctr	0.00
H	MT20	2.0x 4.0	Ctr	Ctr	0.00
J	MT20	2.0x 4.0	Ctr	Ctr	0.00
B	MT20	4.0x 4.0	Ctr	Ctr	0.68
M	MT20	2.0x 4.0	Ctr	Ctr	0.00
O	MT20	2.0x 4.0	Ctr	Ctr	0.00
Q	MT20	2.0x 4.0	Ctr	Ctr	0.00
S	MT20	2.0x 4.0	Ctr	Ctr	0.00
C	MT20	3.0x 4.0	Ctr	Ctr	0.81
E	MT20	2.0x 4.0	Ctr	Ctr	0.00
G	MT20	2.0x 4.0	Ctr	Ctr	0.00
I	MT20	2.0x 4.0	Ctr	Ctr	0.00
K	MT20	2.0x 4.0	Ctr	Ctr	0.00
L	MT20	5.0x 5.0	Ctr	-0.5	0.61
N	MT20	2.0x 4.0	Ctr	Ctr	0.00
P	MT20	2.0x 4.0	Ctr	Ctr	0.00
R	MT20	2.0x 4.0	Ctr	Ctr	0.00
T	MT20	2.0x 4.0	Ctr	Ctr	0.00

REVIEWED BY:
Robbins Engineering, Inc.
6904 Parke East Blvd.
Tampa, FL 33610

REFER TO ROBBINS ENG. GENERAL NOTES AND SYMBOLS SHEET FOR

ADDITIONAL SPECIFICATIONS.
NOTES:
Trusses Manufactured by:
Mayo Truss Co. Inc.
Analysis Conforms To:
FBC2004
WARNING Do Not Cut overframe member between outside of truss and first tie-plate to inside of heel plate.
Design checked for 10 psf non-concurrent LL on BC.
Refer to Gen Det 3 series for web bracing and plating.
Wind Loads - ANSI / ASCE 7-02
Truss is designed as Components and Claddings* for Exterior zone location.
Wind Speed: 110 mph
Mean Roof Height: 15-0
Exposure Category: B
Occupancy Factor : 1.00
Building Type: Enclosed
TC Dead Load: 5.0 psf
BC Dead Load: 5.0 psf
Max comp. force 175 Lbs
Max tens. force 211 Lbs
Quality Control Factor 1.25

Philip J. O'Regan, FL Lic. #58126
Robbins Engineering
6904 Parke East Blvd
Tampa, FL, 33610
FL Cert.#5555

Job	Mark	Quan	Type	Span	P1-H1	Left OH	Right OH	Engineering
LEEBLATTER	D1	9	TR	60000	6	1- 0- 0	1- 0- 0	T2668831

LEE & ANGIE BLATTER

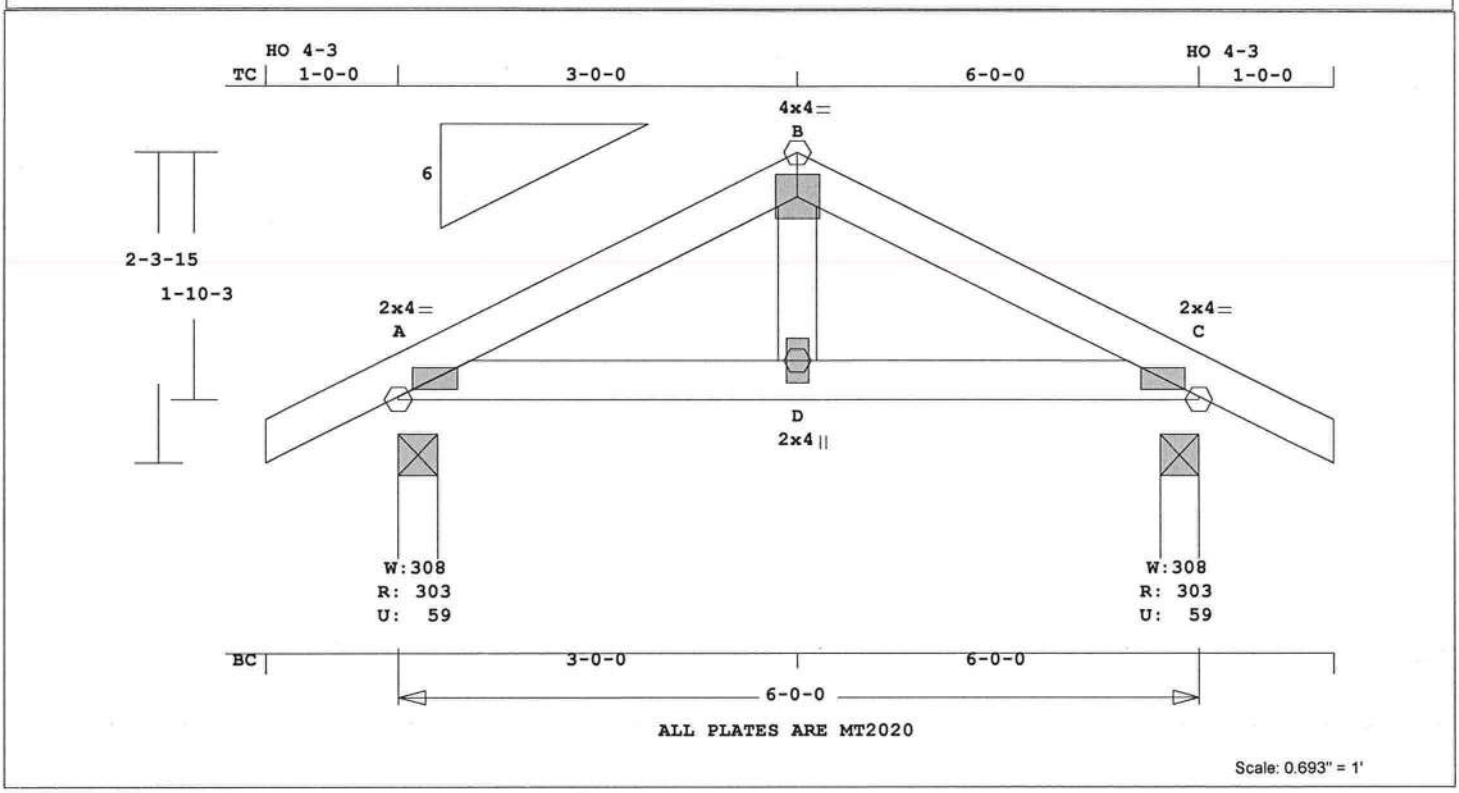

Robbins Engineering, Inc./Online Plus™ APPROX. TRUSS WEIGHT: 31.1 LBS

Online Plus -- Version 21.0.060
RUN DATE: 06-SEP-07

	CSI	-Size-	----Lumber----
TC	0.12	2x 4	SP-#2
BC	0.07	2x 4	SP-#2
WB	0.01	2x 4	SP-#2

Brace truss as follows:

	O.C.	From	To
TC	Cont.	0- 0- 0	6- 0- 0
BC	Cont.	0- 0- 0	6- 0- 0

psf-Ld	Dead	Live
TC	10.0	20.0
BC	10.0	0.0
TC+BC	20.0	20.0

Total 40.0 Spacing 24.0"
Lumber Duration Factor 1.25
Plate Duration Factor 1.25
TC Fb=1.15 Fc=1.10 Ft=1.10
BC Fb=1.10 Fc=1.10 Ft=1.10

Total Load Reactions (Lbs)

Jt	Down	Uplift	Horiz-
A	304	60 U	25 R
C	304	60 U	25 R

Jt	Brg Size	Required
A	3.5"	1.5"
C	3.5"	1.5"

Plus 9 Wind Load Case(s)
Plus 1 UBC LL Load Case(s)

Membr	CSI	P Lbs	Axl-CSI-Bnd
----------Top Chords----------			
A -B	0.12	315 T	0.04 0.08
B -C	0.12	315 T	0.04 0.08
--------Bottom Chords---------			
A -D	0.07	238 T	0.04 0.03
D -C	0.07	238 T	0.04 0.03
----------Webs----------			
D -B	0.01	118 T	

TL Defl 0.00" in D -C L/999
LL Defl 0.00" in D -C L/999
Shear // Grain in A -B 0.13

Plates for each ply each face.
Plate - MT20 20 Ga, Gross Area
Plate - MT2H 20 Ga, Gross Area

Jt	Type	Plt Size	X	Y	JSI
A	MT20	2.0x 4.0	Ctr	Ctr	0.67
B	MT20	4.0x 4.0	Ctr	Ctr	0.45
C	MT20	2.0x 4.0	Ctr	Ctr	0.67
D	MT20	2.0x 4.0	Ctr	Ctr	0.38

REVIEWED BY:
Robbins Engineering, Inc.
6904 Parke East Blvd.
Tampa, FL 33610

REFER TO ROBBINS ENG. GENERAL NOTES AND SYMBOLS SHEET FOR ADDITIONAL SPECIFICATIONS.

NOTES:
Trusses Manufactured by:
Mayo Truss Co. Inc.
Analysis Conforms To:
FBC2004
OH Loading
Soffit psf 2.0
Design checked for 10 psf non-concurrent LL on BC.
Wind Loads - ANSI / ASCE 7-02
Truss is designed as
Components and Claddings*
for Exterior zone location.

Wind Speed: 110 mph
Mean Roof Height: 18-0
Exposure Category: B
Occupancy Factor : 1.00
Building Type: Enclosed
TC Dead Load: 5.0 psf
BC Dead Load: 5.0 psf
Max comp. force 265 Lbs
Max tens. force 315 Lbs
Quality Control Factor 1.25

Philip J. O'Regan, FL Lic. #58126
Robbins Engineering
6904 Parke East Blvd
Tampa, FL, 33610
FL Cert.#5555

Job	Mark	Quan	Type	Span	P1-H1	Left OH	Right OH	Engineering
LEEBLATTER	P1	24	TR	60000	6	11- 5	11- 5	T2668832

LEE & ANGIE BLATTER

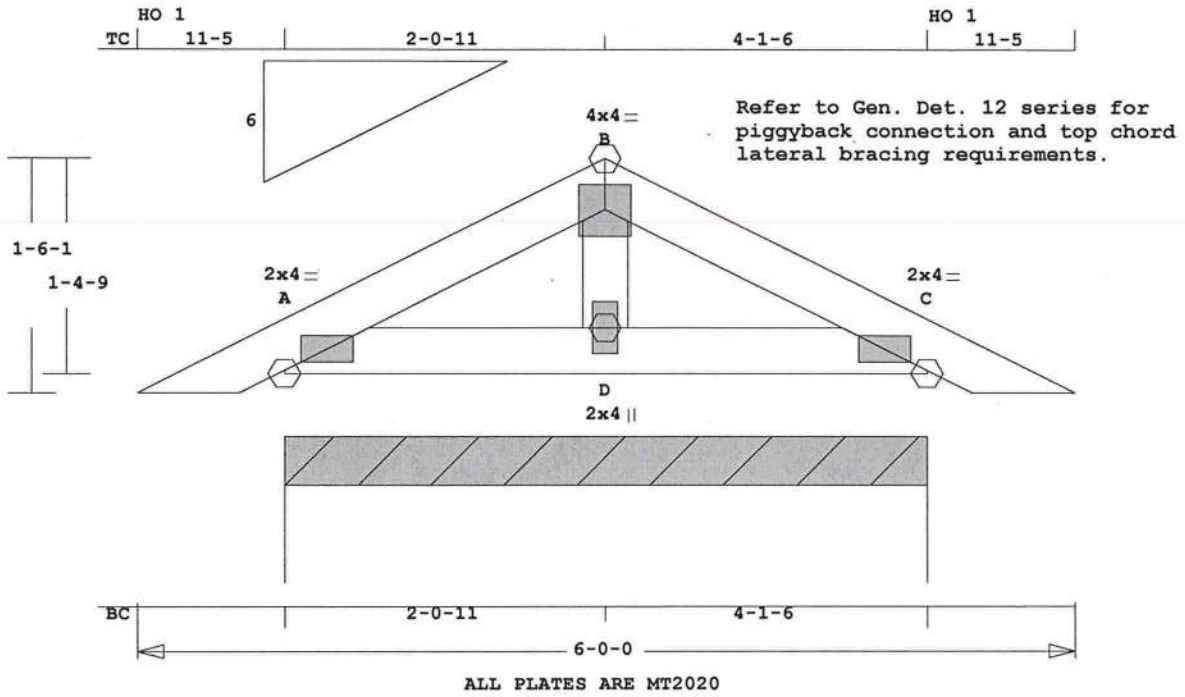

Robbins Engineering, Inc./Online Plus™ APPROX. TRUSS WEIGHT: 21.9 LBS

Online Plus -- Version 21.0.060
RUN DATE: 06-SEP-07

	CSI	-Size-	----Lumber----
TC	0.04	2x 4	SP-#2
BC	0.03	2x 4	SP-#2
WB	0.01	2x 4	SP-#2

Brace truss as follows:

	O.C.	From	To
TC	Cont.	0- 0- 0	6- 0- 0
BC	Cont.	0- 0- 0	6- 0- 0

psf-Ld	Dead	Live
TC	10.0	20.0
BC	10.0	0.0
TC+BC	20.0	20.0

Total 40.0 Spacing 24.0"
Lumber Duration Factor 1.25
Plate Duration Factor 1.25
TC Fb=1.15 Fc=1.10 Ft=1.10
BC Fb=1.10 Fc=1.10 Ft=1.10

Total Load Reactions (Lbs)

Jt	Down	Uplift	Horiz-
A	366	50 U	16 R

Jt	Brg Size	Required
A	49.4"	0"-to- 49"

Plus 9 Wind Load Case(s)
Plus 1 UBC LL Load Case(s)

Membr	CSI	P Lbs	Axl-CSI-Bnd	
----------Top Chords----------				
A -B	0.04	114 T	0.01	0.03
B -C	0.04	114 T	0.01	0.03
--------Bottom Chords---------				
A -D	0.03	5 T	0.00	0.03
D -C	0.03	5 T	0.00	0.03

----------Webs----------

D -B	0.01	73 T	

TL Defl 0.00" in A -D L/999
LL Defl 0.00" in A -D L/999
Shear // Grain in A -B 0.08

Plates for each ply each face.
Plate - MT20 20 Ga, Gross Area
Plate - MT2H 20 Ga, Gross Area

Jt	Type	Plt Size	X	Y	JSI
A	MT20	2.0x 4.0	Ctr	Ctr	0.65
B	MT20	4.0x 4.0	Ctr	Ctr	0.43
C	MT20	2.0x 4.0	Ctr	Ctr	0.65
D	MT20	2.0x 4.0	Ctr	Ctr	0.38

REVIEWED BY:
Robbins Engineering, Inc.
6904 Parke East Blvd.
Tampa, FL 33610

REFER TO ROBBINS ENG. GENERAL NOTES AND SYMBOLS SHEET FOR ADDITIONAL SPECIFICATIONS.
NOTES:
Trusses Manufactured by:
Mayo Truss Co. Inc.
Analysis Conforms To:
FBC2004
OH Loading
Soffit psf 2.0
Design checked for 10 psf non-concurrent LL on BC.
Refer to Gen Det 3 series for web bracing and plating.
Wind Loads - ANSI / ASCE 7-02
Truss is designed as Components and Claddings* for Exterior zone location.

Wind Speed: 110 mph
Mean Roof Height: 15-0
Exposure Category: B
Occupancy Factor : 1.00
Building Type: Enclosed
TC Dead Load: 5.0 psf
BC Dead Load: 5.0 psf
Max comp. force 68 Lbs
Max tens. force 114 Lbs
Quality Control Factor 1.25

Philip J. O'Regan, FL Lic. #58126
Robbins Engineering
6904 Parke East Blvd
Tampa, FL, 33610
FL Cert.#5555

Job	Mark	Quan	Type	Span	P1-H1	Left OH	Right OH	Engineering
LEEBLATTER	P2	2	TR	40806	6	11- 5	11- 5	T2668833

LEE & ANGIE BLATTER

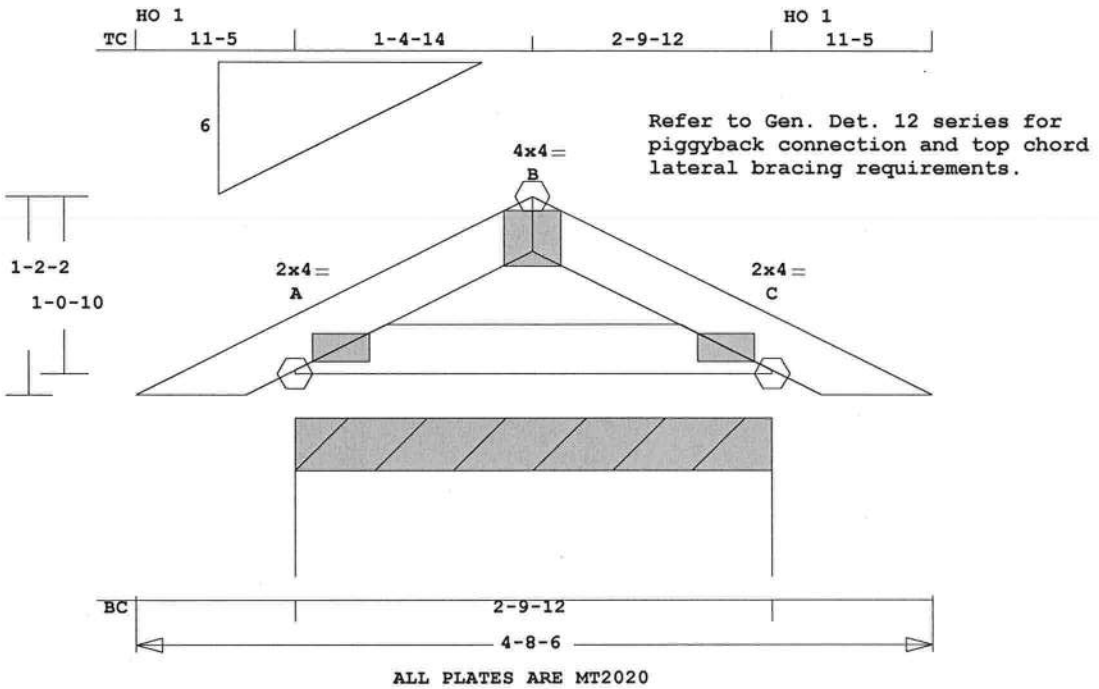

Refer to Gen. Det. 12 series for piggyback connection and top chord lateral bracing requirements.

ALL PLATES ARE MT2020

Scale: 0.879" = 1'

Robbins Engineering, Inc./Online Plus™ APPROX. TRUSS WEIGHT: 15.2 LBS

Online Plus -- Version 21.0.060
RUN DATE: 06-SEP-07

	CSI	-Size-	----Lumber----
TC	0.02	2x 4	SP-#2
BC	0.01	2x 4	SP-#2

Brace truss as follows:

	O.C.	From	To
TC	Cont.	0- 0- 0	4- 8- 6
BC	Cont.	0- 0- 0	4- 8- 6

psf-Ld	Dead	Live
TC	10.0	20.0
BC	10.0	0.0
TC+BC	20.0	20.0
Total	40.0	Spacing 24.0"

Lumber Duration Factor 1.25
Plate Duration Factor 1.25
TC Fb=1.15 Fc=1.10 Ft=1.10
BC Fb=1.10 Fc=1.10 Ft=1.10

Total Load Reactions (Lbs)

Jt	Down	Uplift	Horiz-
A	262	36 U	10 R

Jt	Brg Size	Required
A	33.8"	0"-to- 34"

Plus 9 Wind Load Case(s)
Plus 1 UBC LL Load Case(s)

Membr	CSI	P Lbs	Axl-CSI-Bnd
----------Top Chords----------			
A -B	0.02	129 T	0.01 0.01
B -C	0.02	129 T	0.01 0.01
--------Bottom Chords---------			
A -C	0.01	2 T	0.00 0.01

TL Defl 0.00" in A -C L/999

LL Defl 0.00" in A -C L/999
Shear // Grain in A -B 0.05

Plates for each ply each face.
Plate - MT20 20 Ga, Gross Area
Plate - MT2H 20 Ga, Gross Area

Jt	Type	Plt Size	X	Y	JSI
A	MT20	2.0x 4.0	Ctr	Ctr	0.65
B	MT20	4.0x 4.0	Ctr	-1.0	0.33
C	MT20	2.0x 4.0	Ctr	Ctr	0.65

REVIEWED BY:
Robbins Engineering, Inc.
6904 Parke East Blvd.
Tampa, FL 33610

REFER TO ROBBINS ENG. GENERAL NOTES AND SYMBOLS SHEET FOR ADDITIONAL SPECIFICATIONS.

NOTES:
Trusses Manufactured by:
Mayo Truss Co. Inc.
Analysis Conforms To:
FBC2004
OH Loading
Soffit psf 2.0
Design checked for 10 psf non-concurrent LL on BC.
Refer to Gen Det 3 series for web bracing and plating.
Wind Loads - ANSI / ASCE 7-02
Truss is designed as
Components and Claddings*
for Exterior zone location.
Wind Speed: 110 mph
Mean Roof Height: 15-0
Exposure Category: B
Occupancy Factor : 1.00
Building Type: Enclosed

TC Dead Load: 5.0 psf
BC Dead Load: 5.0 psf
Max comp. force 88 Lbs
Max tens. force 129 Lbs
Quality Control Factor 1.25

Philip J. O'Regan, FL Lic. #58126
Robbins Engineering
6904 Parke East Blvd
Tampa, FL, 33610
FL Cert.#5555

Job	Mark	Quan	Type	Span	P1-H1	Left OH	Right OH	Engineering
LEEBLATTER	PG1	2*2P	TR	60000	6	11- 5	11- 5	T2668834

LEE & ANGIE BLATTER

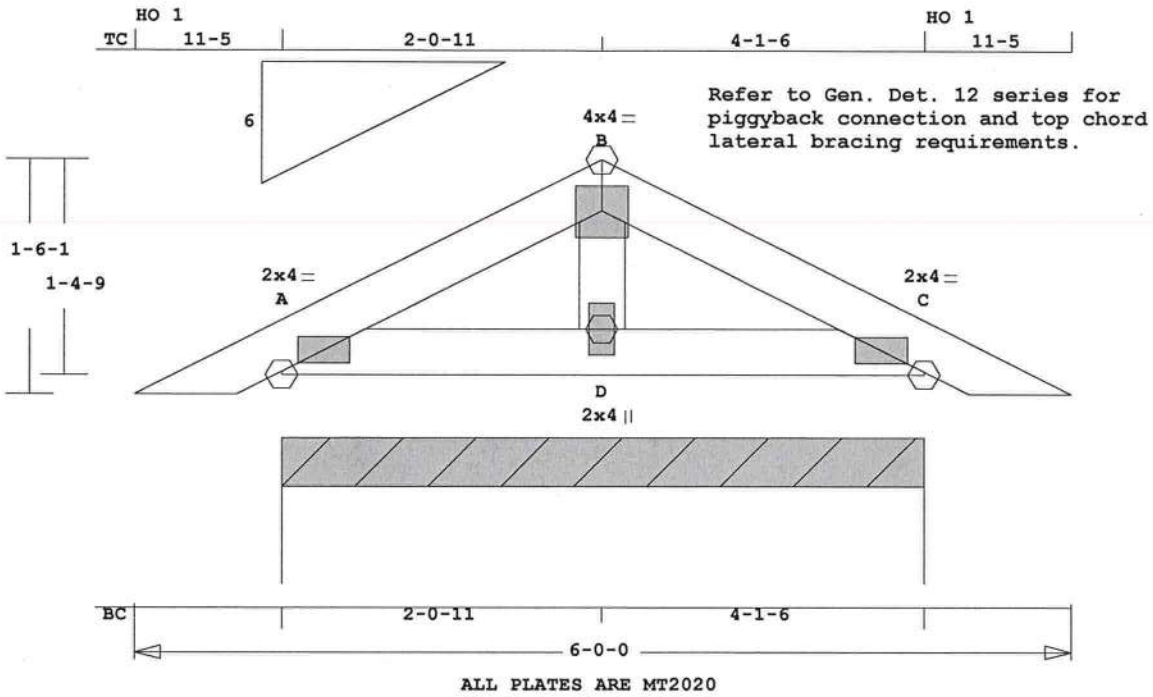

Refer to Gen. Det. 12 series for piggyback connection and top chord lateral bracing requirements.

ALL PLATES ARE MT2020

Scale: 0.810" = 1'

Robbins Engineering, Inc./Online Plus™ APPROX. TRUSS WEIGHT: 21.9 LBS

Online Plus -- Version 21.0.060
RUN DATE: 06-SEP-07
****
* 2-Ply Truss *
****

	CSI	-Size-	----Lumber----
TC	0.04	2x 4	SP-#2
BC	0.03	2x 4	SP-#2
WB	0.00	2x 4	SP-#2

Brace truss as follows:

	O.C.	From	To
TC	24.0"	0- 0- 0	6- 0- 0
BC	24.0"	0- 0- 0	6- 0- 0

psf-Ld	Dead	Live
TC	10.0	20.0
BC	10.0	0.0
TC+BC	20.0	20.0

Total 40.0 Spacing 42.0"
Lumber Duration Factor 1.25
Plate Duration Factor 1.25
TC Fb=1.00 Fc=1.00 Ft=1.00
BC Fb=1.00 Fc=1.00 Ft=1.00

Total Load Reactions (Lbs)

Jt	Down	Uplift	Horiz-
A	641	88 U	28 R

Jt	Brg Size	Required
A	49.4"	0"-to- 49"

Plus 9 Wind Load Case(s)
Plus 1 UBC LL Load Case(s)

Membr	CSI	P Lbs	Axl-CSI-Bnd
----------Top Chords----------			
A -B	0.04	200 T	0.01 0.03
B -C	0.04	200 T	0.01 0.03
--------Bottom Chords---------			
A -D	0.03	10 T	0.00 0.03
D -C	0.03	10 T	0.00 0.03
----------Webs----------			
D -B	0.00	128 T	

TL Defl 0.00" in A -D L/999
LL Defl 0.00" in A -D L/999
Shear // Grain in A -B 0.07

Plates for each ply each face.
Plate - MT20 20 Ga, Gross Area
Plate - MT2H 20 Ga, Gross Area

Jt	Type	Plt Size	X	Y	JSI
A	MT20	2.0x 4.0	Ctr	Ctr	0.65
B	MT20	4.0x 4.0	Ctr	Ctr	0.43
C	MT20	2.0x 4.0	Ctr	Ctr	0.65
D	MT20	2.0x 4.0	Ctr	Ctr	0.38

REVIEWED BY:
Robbins Engineering, Inc.
6904 Parke East Blvd.
Tampa, FL 33610

REFER TO ROBBINS ENG. GENERAL NOTES AND SYMBOLS SHEET FOR ADDITIONAL SPECIFICATIONS.
NOTES:
Trusses Manufactured by:
Mayo Truss Co. Inc.
Analysis Conforms To:
FBC2004
2 COMPLETE TRUSSES REQUIRED.
Fasten together in staggered pattern. (1/2" bolts -OR- SDS3 screws -OR- 10d nails as each layer is applied.)

	----Spacing (In)----		
Rows	Nails	Screws	Bolts
TC 1	12	24	0
BC 1	12	24	0
WB 1	8	8	

OH Loading
Soffit psf 2.0
Design checked for 10 psf non-concurrent LL on BC.
Refer to Gen Det 3 series for web bracing and plating.
Wind Loads - ANSI / ASCE 7-02
Truss is designed as Components and Claddings* for Exterior zone location.
Wind Speed: 110 mph
Mean Roof Height: 15-0
Exposure Category: B
Occupancy Factor : 1.00
Building Type: Enclosed
TC Dead Load: 5.0 psf
BC Dead Load: 5.0 psf
Max comp. force 120 Lbs
Max tens. force 200 Lbs
Quality Control Factor 1.25

Philip J. O'Regan, FL Lic. #58126
Robbins Engineering
6904 Parke East Blvd
Tampa, FL, 33610
FL Cert.#5555

Job	Mark	Quan	Type	Span	P1-H1	Left OH	Right OH	Engineering
LEEBLATTER	PG2	2*3P	TR	60000	6	11- 5	11- 5	T2668835

LEE & ANGIE BLATTER

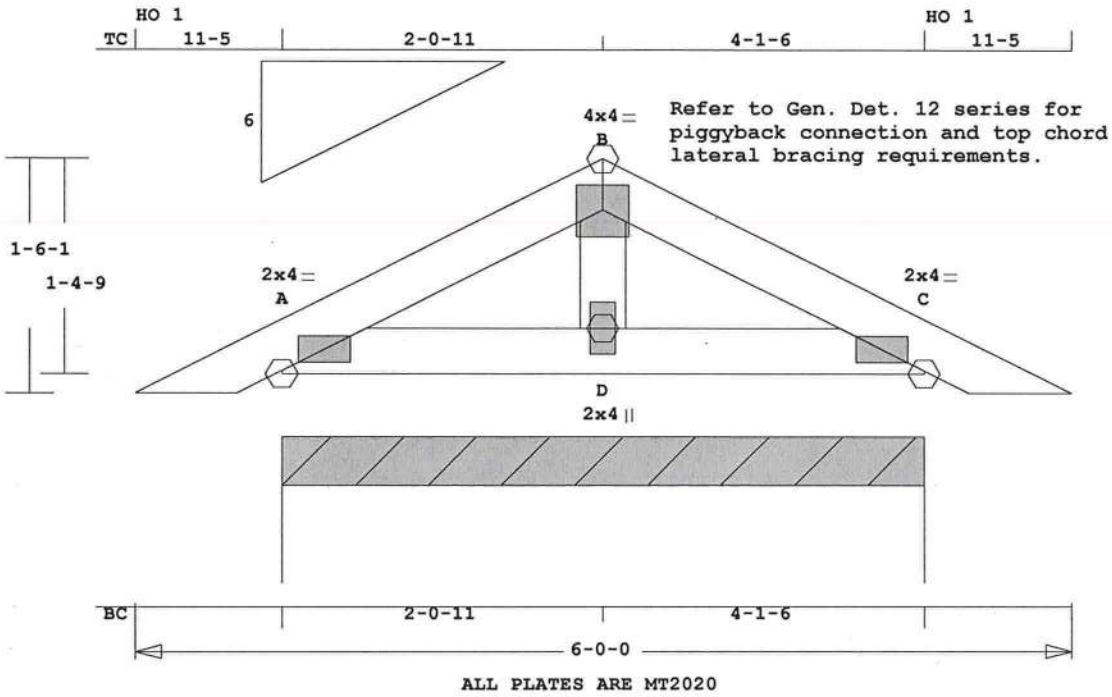

Scale: 0.810" = 1'

Robbins Engineering, Inc./Online Plus™ APPROX. TRUSS WEIGHT: 21.9 LBS

Online Plus -- Version 21.0.060
RUN DATE: 06-SEP-07
****
* 3-Ply Truss *
****

	CSI	-Size-	----Lumber----
TC	0.03	2x 4	SP-#2
BC	0.02	2x 4	SP-#2
WB	0.00	2x 4	SP-#2

Brace truss as follows:

	O.C.	From	To
TC	24.0"	0- 0- 0	6- 0- 0
BC	24.0"	0- 0- 0	6- 0- 0

psf-Ld	Dead	Live
TC	10.0	20.0
BC	10.0	0.0
TC+BC	20.0	20.0
Total	40.0	Spacing 48.0"

Lumber Duration Factor 1.25
Plate Duration Factor 1.25
TC Fb=1.15 Fc=1.10 Ft=1.10
BC Fb=1.10 Fc=1.10 Ft=1.10

Total Load Reactions (Lbs)

Jt	Down	Uplift	Horiz-
A	733	101 U	31 R

Jt	Brg Size	Required
A	49.4"	0"-to- 49"

Plus 9 Wind Load Case(s)
Plus 1 UBC LL Load Case(s)

Membr	CSI	P Lbs	Axl-CSI-Bnd	
----------Top Chords----------				
A -B	0.03	228 T	0.01	0.02
B -C	0.03	228 T	0.01	0.02
--------Bottom Chords---------				
A -D	0.02	11 T	0.00	0.02
D -C	0.02	11 T	0.00	0.02
----------Webs----------				
D -B	0.00	146 T		

TL Defl 0.00" in D -C L/999
LL Defl 0.00" in D -C L/999
Shear // Grain in A -B 0.05

Plates for each ply each face.
Plate - MT20 20 Ga, Gross Area
Plate - MT2H 20 Ga, Gross Area

Jt	Type	Plt Size	X	Y	JSI
A	MT20	2.0x 4.0	Ctr	Ctr	0.65
B	MT20	4.0x 4.0	Ctr	Ctr	0.43
C	MT20	2.0x 4.0	Ctr	Ctr	0.65
D	MT20	2.0x 4.0	Ctr	Ctr	0.38

REVIEWED BY:
Robbins Engineering, Inc.
6904 Parke East Blvd.
Tampa, FL 33610

REFER TO ROBBINS ENG. GENERAL NOTES AND SYMBOLS SHEET FOR ADDITIONAL SPECIFICATIONS.
NOTES:
Trusses Manufactured by:
Mayo Truss Co. Inc.
Analysis Conforms To:
FBC2004
3 COMPLETE TRUSSES REQUIRED.
Fasten together in staggered pattern. (1/2" bolts -OR- SDS4.5 screws -OR- 16d nails as each layer is applied.)

	Rows	Nails	Screws	Bolts
		----Spacing (In)----		
TC	1	12	24	0
BC	1	12	24	0
WB	1	8	8	

No bolts in 2x4s or smaller.
OH Loading
Soffit psf 2.0
Design checked for 10 psf non-concurrent LL on BC.

Refer to Gen Det 3 series for web bracing and plating.
Wind Loads - ANSI / ASCE 7-02
Truss is designed as Components and Claddings* for Exterior zone location.
Wind Speed: 110 mph
Mean Roof Height: 15-0
Exposure Category: B
Occupancy Factor : 1.00
Building Type: Enclosed
TC Dead Load: 5.0 psf
BC Dead Load: 5.0 psf
Max comp. force 137 Lbs
Max tens. force 228 Lbs
Quality Control Factor 1.25

Philip J. O'Regan, FL Lic. #58126
Robbins Engineering
6904 Parke East Blvd
Tampa, FL, 33610
FL Cert.#5555

Job	Mark	Quan	Type	Span	P1-H1	Left OH	Right OH	Engineering
LEEBLATTER	V1	1	VL.SB	240612	6	0	0	T2668836

LEE & ANGIE BLATTER

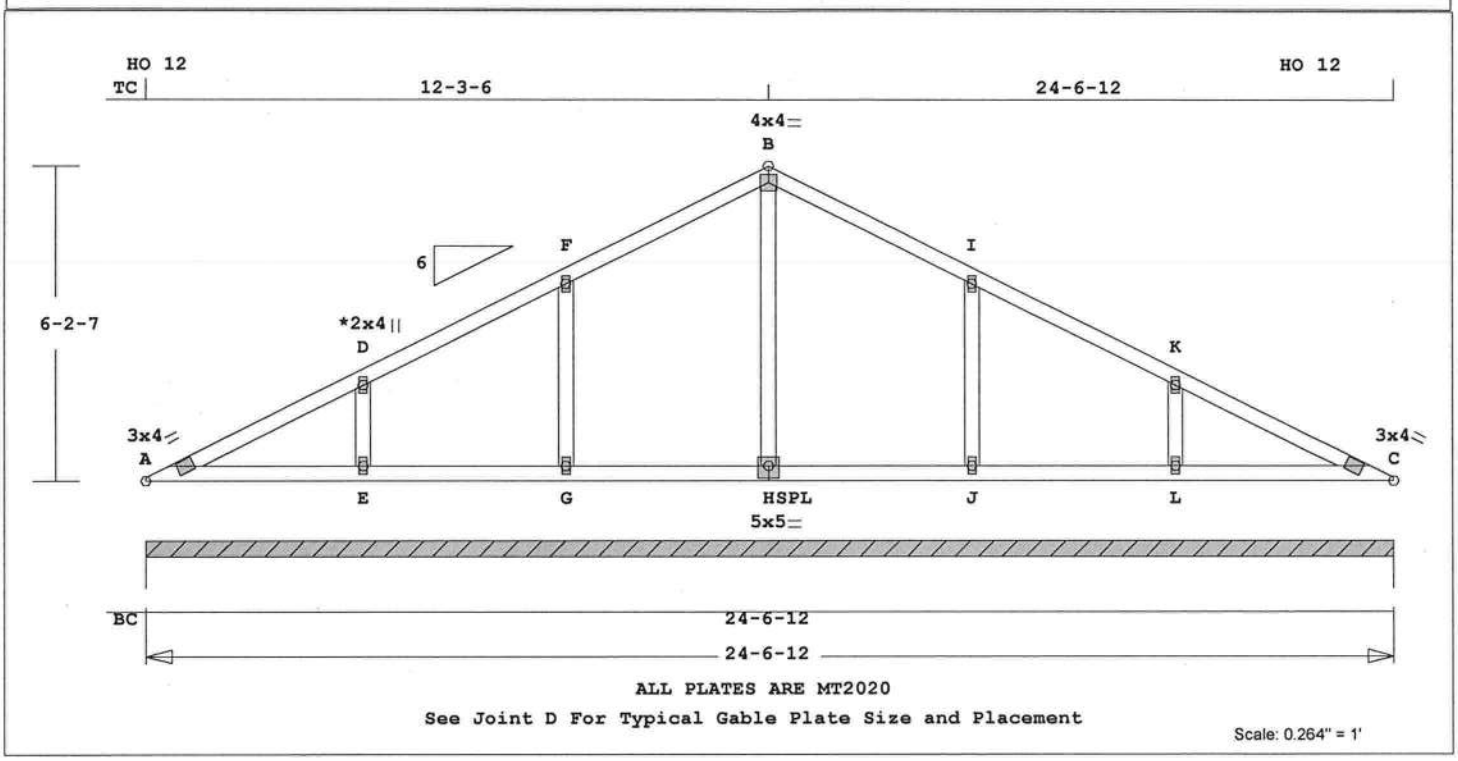

Robbins Engineering, Inc./Online Plus™ APPROX. TRUSS WEIGHT: 126.9 LBS

Online Plus -- Version 21.0.060
RUN DATE: 06-SEP-07

	CSI	-Size-	----Lumber----
TC	0.15	2x 4	SP-#2
BC	0.09	2x 4	SP-#2
GW	0.07	2x 4	SP-#2

Brace truss as follows:

	O.C.	From	To
TC	Cont.	0- 0- 0	24- 6-12
BC	Cont.	0- 0- 0	24- 6-12

psf-Ld	Dead	Live
TC	10.0	20.0
BC	10.0	0.0
TC+BC	20.0	20.0

Total 40.0 Spacing 24.0"
Lumber Duration Factor 1.25
Plate Duration Factor 1.25
TC Fb=1.15 Fc=1.10 Ft=1.10
BC Fb=1.10 Fc=1.10 Ft=1.10

Total Load Reactions (Lbs)

Jt	Down	Uplift	Horiz-
A	2167	220 U	230 R

Jt	Brg Size	Required
A	294.8"	0"-to- 295"

Plus 9 Wind Load Case(s)
Plus 1 UBC LL Load Case(s)

Membr	CSI	P Lbs	Axl-CSI-Bnd
----------Top Chords----------			
A -D	0.15	113 C	0.00 0.15
D -F	0.15	47 T	0.00 0.15
F -B	0.15	159 T	0.00 0.15
B -I	0.15	159 T	0.00 0.15
I -K	0.15	47 T	0.00 0.15
K -C	0.15	113 C	0.00 0.15
--------Bottom Chords---------			
A -E	0.09	2 T	0.00 0.09
E -G	0.09	0 T	0.00 0.09
G -H	0.08	0 T	0.00 0.08
H -J	0.08	0 T	0.00 0.08
J -L	0.09	0 T	0.00 0.09
L -C	0.09	2 T	0.00 0.09
----------Gable Webs----------			
E -D	0.03	246 C	
G -F	0.05	275 T	
H -B	0.07	179 C	
J -I	0.05	275 T	
L -K	0.03	246 C	

TL Defl -0.01" in L -C L/999
LL Defl 0.00" in L -C L/999
Shear // Grain in F -B 0.15

Plates for each ply each face.
Plate - MT20 20 Ga, Gross Area
Plate - MT2H 20 Ga, Gross Area

Jt	Type	Plt Size	X	Y	JSI
A	MT20	3.0x 4.0	Ctr	Ctr	0.84
D	MT20	2.0x 4.0	Ctr	Ctr	0.00
F	MT20	2.0x 4.0	Ctr	Ctr	0.00
B	MT20	4.0x 4.0	Ctr	Ctr	0.70
I	MT20	2.0x 4.0	Ctr	Ctr	0.00
K	MT20	2.0x 4.0	Ctr	Ctr	0.00
C	MT20	3.0x 4.0	Ctr	Ctr	0.84
E	MT20	2.0x 4.0	Ctr	Ctr	0.00
G	MT20	2.0x 4.0	Ctr	Ctr	0.00
H	MT20	5.0x 5.0	Ctr	-0.5	0.63
J	MT20	2.0x 4.0	Ctr	Ctr	0.00
L	MT20	2.0x 4.0	Ctr	Ctr	0.00

REVIEWED BY:
Robbins Engineering, Inc.
6904 Parke East Blvd.
Tampa, FL 33610

REFER TO ROBBINS ENG. GENERAL NOTES AND SYMBOLS SHEET FOR ADDITIONAL SPECIFICATIONS.
NOTES:
Trusses Manufactured by:
Mayo Truss Co. Inc.
Analysis Conforms To:
FBC2004
Design checked for 10 psf non-concurrent LL on BC.

Wind Loads - ANSI / ASCE 7-02
Truss is designed as
Components and Claddings*
for Exterior zone location.
Wind Speed: 110 mph
Mean Roof Height: 15-0
Exposure Category: B
Occupancy Factor : 1.00
Building Type: Enclosed
TC Dead Load: 5.0 psf
BC Dead Load: 5.0 psf
Max comp. force 249 Lbs
Max tens. force 275 Lbs
Quality Control Factor 1.25

Philip J. O'Regan, FL Lic. #58126
Robbins Engineering
6904 Parke East Blvd
Tampa, FL, 33610
FL Cert.#5555

Job	Mark	Quan	Type	Span	P1-H1	Left OH	Right OH	Engineering
LEEBLATTER	V2	1	VL.SB	200612	6	0	0	T2668837

LEE & ANGIE BLATTER

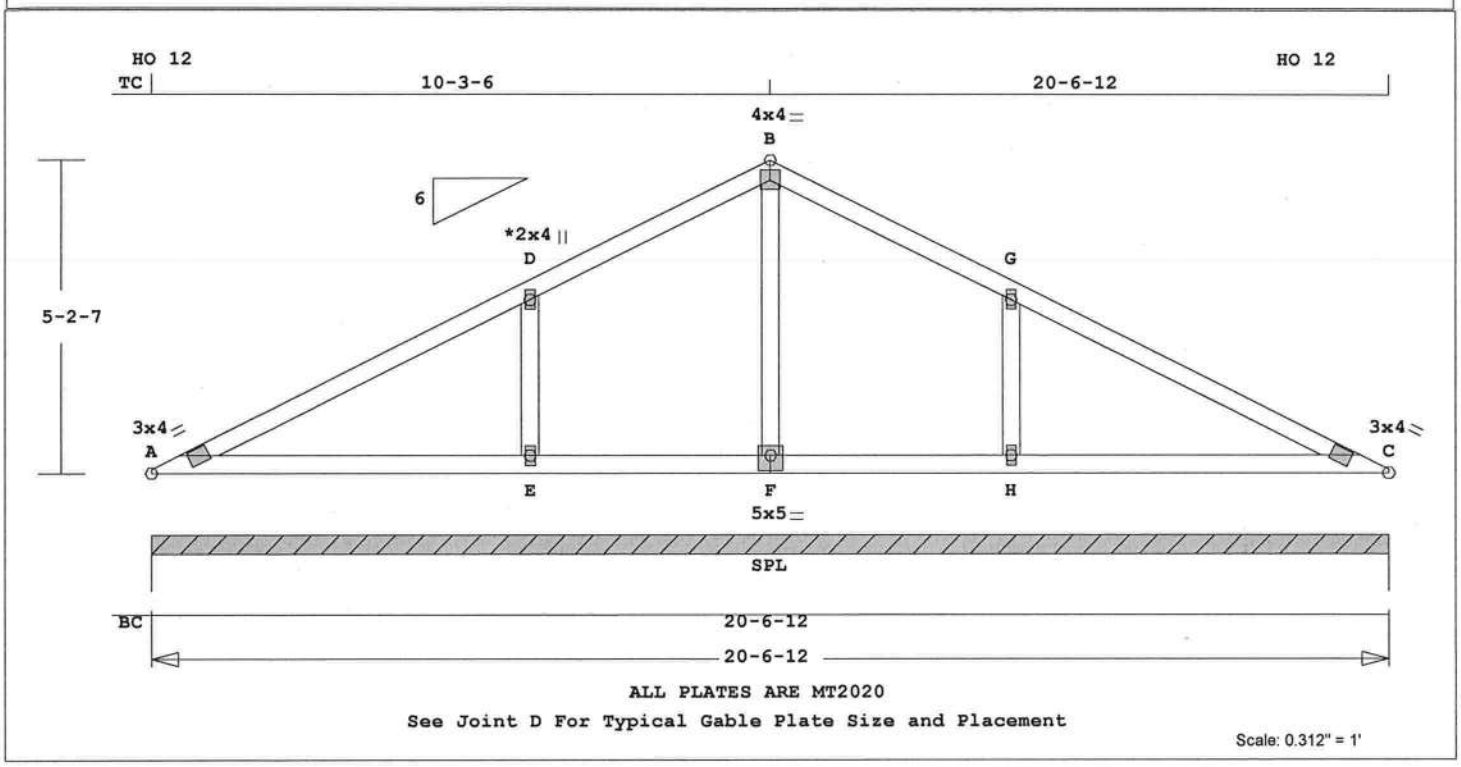

Robbins Engineering, Inc./Online Plus™ APPROX. TRUSS WEIGHT: 99.0 LBS

Online Plus -- Version 21.0.060
RUN DATE: 06-SEP-07

	CSI	-Size-	----Lumber----
TC	0.30	2x 4	SP-#2
BC	0.19	2x 4	SP-#2
GW	0.04	2x 4	SP-#2

Brace truss as follows:

	O.C.	From	To
TC	Cont.	0- 0- 0	20- 6-12
BC	Cont.	0- 0- 0	20- 6-12

psf-Ld	Dead	Live
TC	10.0	20.0
BC	10.0	0.0
TC+BC	20.0	20.0

Total 40.0 Spacing 24.0"
Lumber Duration Factor 1.25
Plate Duration Factor 1.25
TC Fb=1.15 Fc=1.10 Ft=1.10
BC Fb=1.10 Fc=1.10 Ft=1.10

Total Load Reactions (Lbs)

Jt	Down	Uplift	Horiz-
A	1971	222 U	182 R

Jt	Brg Size	Required
A	246.8"	0"-to- 247"

Plus 9 Wind Load Case(s)
Plus 1 UBC LL Load Case(s)

Membr	CSI	P Lbs	Axl-CSI-Bnd
----------Top Chords----------			
A -D	0.30	65 C	0.00 0.30
D -B	0.30	135 T	0.00 0.30
B -G	0.30	135 T	0.00 0.30
G -C	0.30	65 C	0.00 0.30
--------Bottom Chords---------			
A -E	0.19	2 T	0.00 0.19
E -F	0.18	0 T	0.00 0.18
F -H	0.18	0 T	0.00 0.18
H -C	0.19	2 T	0.00 0.19
----------Gable Webs----------			
E -D	0.04	344 C	
F -B	0.04	140 C	
H -G	0.04	344 C	

TL Defl -0.06" in H -C L/999
LL Defl -0.02" in H -C L/999
Shear // Grain in A -D 0.22

Plates for each ply each face.
Plate - MT20 20 Ga, Gross Area
Plate - MT2H 20 Ga, Gross Area

Jt	Type	Plt Size	X	Y	JSI
A	MT20	3.0x 4.0	Ctr	Ctr	0.77
D	MT20	2.0x 4.0	Ctr	Ctr	0.00
B	MT20	4.0x 4.0	Ctr	Ctr	0.64
G	MT20	2.0x 4.0	Ctr	Ctr	0.00
C	MT20	3.0x 4.0	Ctr	Ctr	0.77
E	MT20	2.0x 4.0	Ctr	Ctr	0.00
F	MT20	5.0x 5.0	Ctr	-0.5	0.58
H	MT20	2.0x 4.0	Ctr	Ctr	0.00

REVIEWED BY:
Robbins Engineering, Inc.
6904 Parke East Blvd.
Tampa, FL 33610

REFER TO ROBBINS ENG. GENERAL NOTES AND SYMBOLS SHEET FOR ADDITIONAL SPECIFICATIONS.

NOTES:
Trusses Manufactured by:
Mayo Truss Co. Inc.
Analysis Conforms To:
FBC2004
Design checked for 10 psf non-concurrent LL on BC.

Wind Loads - ANSI / ASCE 7-02
Truss is designed as
Components and Claddings*
for Exterior zone location.
Wind Speed: 110 mph
Mean Roof Height: 15-0
Exposure Category: B
Occupancy Factor : 1.00
Building Type: Enclosed
TC Dead Load: 5.0 psf
BC Dead Load: 5.0 psf
Max comp. force 344 Lbs
Max tens. force 340 Lbs
Quality Control Factor 1.25

Philip J. O'Regan, FL Lic. #58126
Robbins Engineering
6904 Parke East Blvd
Tampa, FL, 33610
FL Cert.#5555

Job	Mark	Quan	Type	Span	P1-H1	Left OH	Right OH	Engineering
LEEBLATTER	V3	1	VL.SB	160612	6	0	0	T2668838

LEE & ANGIE BLATTER

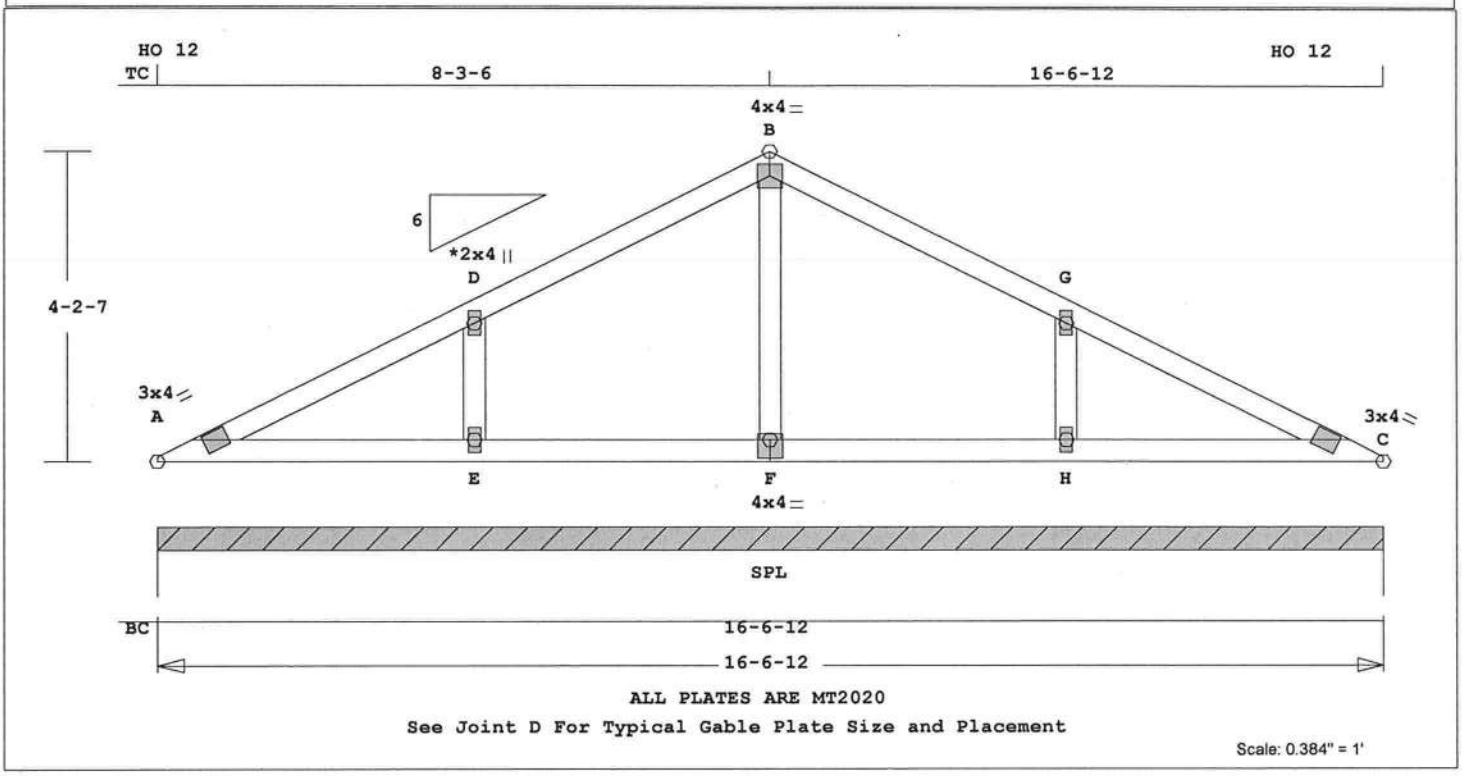

Robbins Engineering, Inc./Online Plus™ APPROX. TRUSS WEIGHT: 77.3 LBS

Online Plus -- Version 21.0.060
RUN DATE: 06-SEP-07

	CSI	-Size-	----Lumber----
TC	0.16	2x 4	SP-#2
BC	0.09	2x 4	SP-#2
GW	0.04	2x 4	SP-#2

Brace truss as follows:

	O.C.	From	To
TC	Cont.	0- 0- 0	16- 6-12
BC	Cont.	0- 0- 0	16- 6-12

psf-Ld	Dead	Live
TC	10.0	20.0
BC	10.0	0.0
TC+BC	20.0	20.0

Total 40.0 Spacing 24.0"
Lumber Duration Factor 1.25
Plate Duration Factor 1.25
TC Fb=1.15 Fc=1.10 Ft=1.10
BC Fb=1.10 Fc=1.10 Ft=1.10

Total Load Reactions (Lbs)

Jt	Down	Uplift	Horiz-
A	1525	171 U	135 R

Jt	Brg Size	Required
A	198.8"	0"-to- 199"

Plus 9 Wind Load Case(s)
Plus 1 UBC LL Load Case(s)

Membr	CSI	P Lbs	Axl-CSI-Bnd	
----------Top Chords----------				
A -D	0.16	51 C	0.00	0.16
D -B	0.16	119 T	0.01	0.15
B -G	0.16	119 T	0.01	0.15
G -C	0.16	51 C	0.00	0.16
--------Bottom Chords---------				
A -E	0.09	2 T	0.00	0.09
E -F	0.09	0 T	0.00	0.09
F -H	0.09	0 T	0.00	0.09
H -C	0.09	2 T	0.00	0.09
----------Gable Webs----------				
E -D	0.04	284 T		
F -B	0.03	171 C		
H -G	0.04	284 T		

TL Defl -0.01" in A -E L/999
LL Defl 0.00" in H -C L/999
Shear // Grain in A -D 0.15

Plates for each ply each face.
Plate - MT20 20 Ga, Gross Area
Plate - MT2H 20 Ga, Gross Area

Jt	Type	Plt Size	X	Y	JSI
A	MT20	3.0x 4.0	Ctr	Ctr	0.71
D	MT20	2.0x 4.0	Ctr	Ctr	0.00
B	MT20	4.0x 4.0	Ctr	Ctr	0.59
G	MT20	2.0x 4.0	Ctr	Ctr	0.00
C	MT20	3.0x 4.0	Ctr	Ctr	0.71
E	MT20	2.0x 4.0	Ctr	Ctr	0.00
F	MT20	4.0x 4.0	Ctr	-1.0	0.53
H	MT20	2.0x 4.0	Ctr	Ctr	0.00

REVIEWED BY:
Robbins Engineering, Inc.
6904 Parke East Blvd.
Tampa, FL 33610

REFER TO ROBBINS ENG. GENERAL NOTES AND SYMBOLS SHEET FOR ADDITIONAL SPECIFICATIONS.
NOTES:
Trusses Manufactured by:
Mayo Truss Co. Inc.
Analysis Conforms To:
FBC2004

Design checked for 10 psf non-concurrent LL on BC.
Wind Loads - ANSI / ASCE 7-02
Truss is designed as
Components and Claddings*
for Exterior zone location.
Wind Speed: 110 mph
Mean Roof Height: 15-0
Exposure Category: B
Occupancy Factor : 1.00
Building Type: Enclosed
TC Dead Load: 5.0 psf
BC Dead Load: 5.0 psf
Max comp. force 261 Lbs
Max tens. force 284 Lbs
Quality Control Factor 1.25

Philip J. O'Regan, FL Lic. #58126
Robbins Engineering
6904 Parke East Blvd
Tampa, FL, 33610
FL Cert.#5555

Job	Mark	Quan	Type	Span	P1-H1	Left OH	Right OH	Engineering
LEEBLATTER	V4	1	VL.SB	120612	6	0	0	T2668839

LEE & ANGIE BLATTER

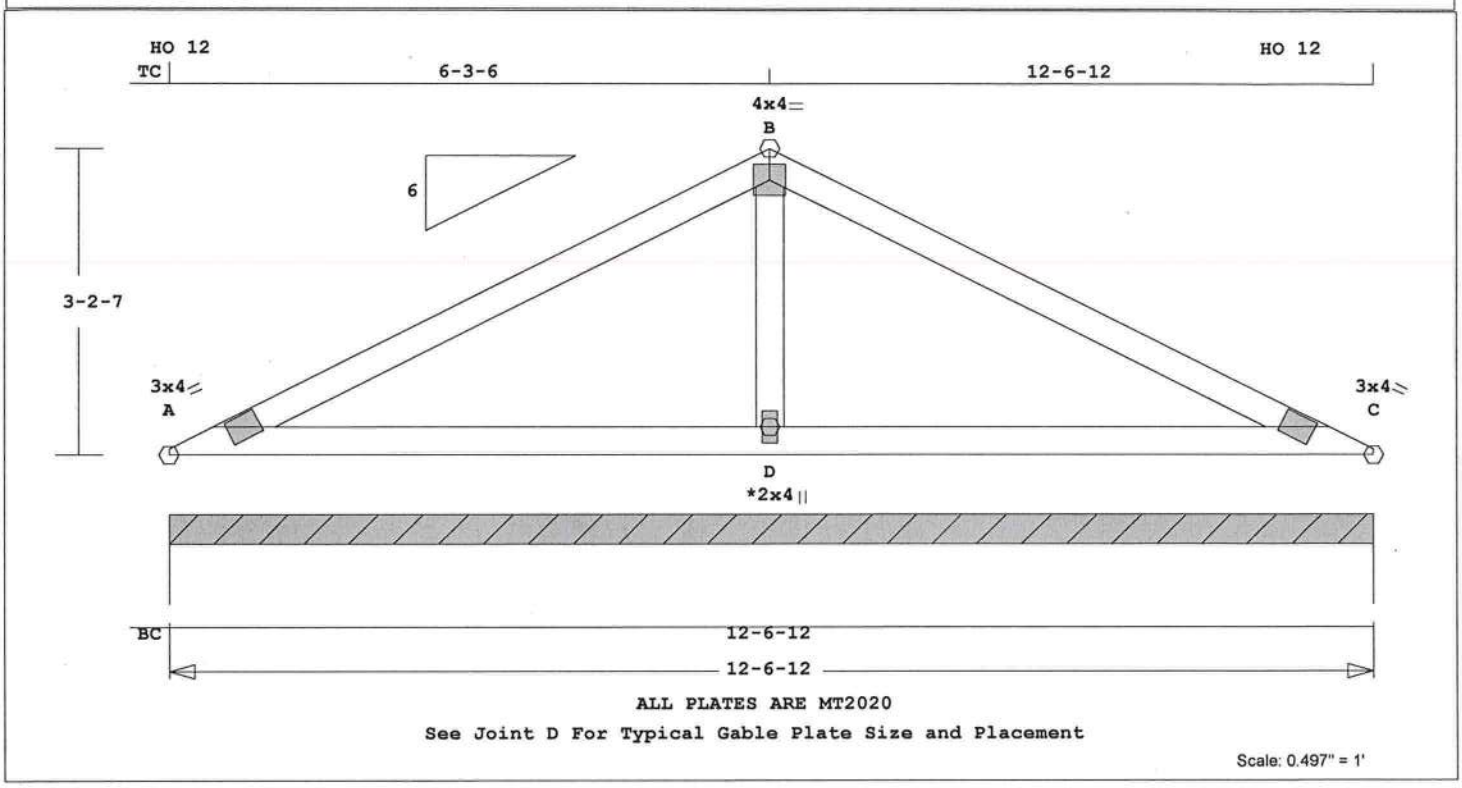

Robbins Engineering, Inc./Online Plus™ APPROX. TRUSS WEIGHT: 53.2 LBS

Online Plus -- Version 21.0.060
RUN DATE: 06-SEP-07

	CSI	-Size-	----Lumber----
TC	0.25	2x 4	SP-#2
BC	0.24	2x 4	SP-#2
GW	0.03	2x 4	SP-#2

Brace truss as follows:

	O.C.	From	To
TC	Cont.	0- 0- 0	12- 6-12
BC	Cont.	0- 0- 0	12- 6-12

psf-Ld	Dead	Live
TC	10.0	20.0
BC	10.0	0.0
TC+BC	20.0	20.0

Total 40.0 Spacing 24.0"
Lumber Duration Factor 1.25
Plate Duration Factor 1.25
TC Fb=1.15 Fc=1.10 Ft=1.10
BC Fb=1.10 Fc=1.10 Ft=1.10

Total Load Reactions (Lbs)

Jt	Down	Uplift	Horiz-
A	1403	204 U	96 R

Jt	Brg Size	Required
A	150.8"	0"-to- 151"

Plus 9 Wind Load Case(s)
Plus 1 UBC LL Load Case(s)

Membr	CSI	P Lbs	Axl-CSI-Bnd	
----------Top Chords----------				
A -B	0.25	138 T	0.01	0.24
B -C	0.25	138 T	0.01	0.24
--------Bottom Chords---------				
A -D	0.24	2 T	0.00	0.24
D -C	0.24	2 T	0.00	0.24

----------Gable Webs----------
D -B 0.03 256 C

TL Defl -0.05" in D -C L/999
LL Defl -0.02" in D -C L/999
Shear // Grain in A -B 0.22

Plates for each ply each face.
Plate - MT20 20 Ga, Gross Area
Plate - MT2H 20 Ga, Gross Area

Jt	Type	Plt Size	X	Y	JSI
A	MT20	3.0x 4.0	Ctr	Ctr	0.64
B	MT20	4.0x 4.0	Ctr	Ctr	0.54
C	MT20	3.0x 4.0	Ctr	Ctr	0.64
D	MT20	2.0x 4.0	Ctr	Ctr	0.00

REVIEWED BY:
Robbins Engineering, Inc.
6904 Parke East Blvd.
Tampa, FL 33610

REFER TO ROBBINS ENG. GENERAL NOTES AND SYMBOLS SHEET FOR ADDITIONAL SPECIFICATIONS.
NOTES:
Trusses Manufactured by:
Mayo Truss Co. Inc.
Analysis Conforms To:
FBC2004
Design checked for 10 psf non-concurrent LL on BC.
Wind Loads - ANSI / ASCE 7-02
Truss is designed as
Components and Claddings*
for Exterior zone location.
Wind Speed: 110 mph
Mean Roof Height: 15-0
Exposure Category: B
Occupancy Factor : 1.00

Building Type: Enclosed
TC Dead Load: 5.0 psf
BC Dead Load: 5.0 psf
Max comp. force 256 Lbs
Max tens. force 243 Lbs
Quality Control Factor 1.25

Philip J. O'Regan, FL Lic. #58126
Robbins Engineering
6904 Parke East Blvd
Tampa, FL, 33610
FL Cert.#5555

Job	Mark	Quan	Type	Span	P1-H1	Left OH	Right OH	Engineering
LEEBLATTER	V5	1	VL.SB	80612	6	0	0	T2668840

LEE & ANGIE BLATTER

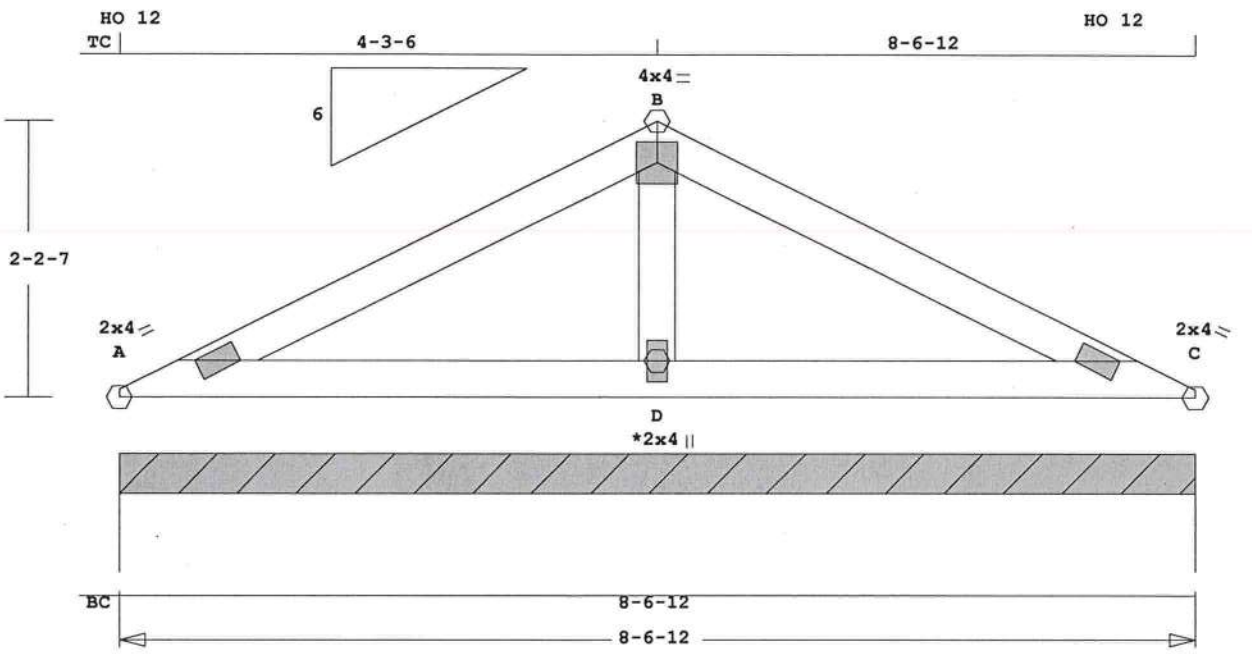

ALL PLATES ARE MT2020

See Joint D For Typical Gable Plate Size and Placement

Scale: 0.653" = 1'

Robbins Engineering, Inc./Online Plus™ APPROX. TRUSS WEIGHT: 35.3 LBS

Online Plus -- Version 21.0.060
RUN DATE: 06-SEP-07

	CSI	-Size-	----Lumber----
TC	0.15	2x 4	SP-#2
BC	0.12	2x 4	SP-#2
GW	0.02	2x 4	SP-#2

Brace truss as follows:

	O.C.	From	To
TC	Cont.	0- 0- 0	8- 6-12
BC	Cont.	0- 0- 0	8- 6-12

psf-Ld	Dead	Live
TC	10.0	20.0
BC	10.0	0.0
TC+BC	20.0	20.0

Total 40.0 Spacing 24.0"
Lumber Duration Factor 1.25
Plate Duration Factor 1.25
TC Fb=1.15 Fc=1.10 Ft=1.10
BC Fb=1.10 Fc=1.10 Ft=1.10

Total Load Reactions (Lbs)

Jt	Down	Uplift	Horiz-
A	915	131 U	62 R

Jt	Brg Size	Required
A	102.8"	0"-to- 103"

Plus 9 Wind Load Case(s)
Plus 1 UBC LL Load Case(s)

Membr	CSI	P Lbs	Axl-CSI-Bnd
----------Top Chords----------			
A -B	0.15	101 T	0.01 0.14
B -C	0.15	101 T	0.01 0.14
--------Bottom Chords---------			
A -D	0.12	2 T	0.00 0.12
D -C	0.12	2 T	0.00 0.12

----------Gable Webs----------
D -B 0.02 199 T

TL Defl -0.01" in D -C L/999
LL Defl 0.00" in D -C L/999
Shear // Grain in A -B 0.17

Plates for each ply each face.
Plate - MT20 20 Ga, Gross Area
Plate - MT2H 20 Ga, Gross Area

Jt	Type	Plt Size	X	Y	JSI
A	MT20	2.0x 4.0	Ctr	Ctr	0.72
B	MT20	4.0x 4.0	Ctr	Ctr	0.48
C	MT20	2.0x 4.0	Ctr	Ctr	0.72
D	MT20	2.0x 4.0	Ctr	Ctr	0.00

REVIEWED BY:
Robbins Engineering, Inc.
6904 Parke East Blvd.
Tampa, FL 33610

REFER TO ROBBINS ENG. GENERAL NOTES AND SYMBOLS SHEET FOR ADDITIONAL SPECIFICATIONS.
NOTES:
Trusses Manufactured by:
Mayo Truss Co. Inc.
Analysis Conforms To:
FBC2004
Design checked for 10 psf non-concurrent LL on BC.
Wind Loads - ANSI / ASCE 7-02
Truss is designed as
Components and Claddings*
for Exterior zone location.
Wind Speed: 110 mph
Mean Roof Height: 15-0
Exposure Category: B
Occupancy Factor : 1.00

Building Type: Enclosed
TC Dead Load: 5.0 psf
BC Dead Load: 5.0 psf
Max comp. force 169 Lbs
Max tens. force 199 Lbs
Quality Control Factor 1.25

Philip J. O'Regan, FL Lic. #58126
Robbins Engineering
6904 Parke East Blvd
Tampa, FL, 33610
FL Cert.#5555

Job	Mark	Quan	Type	Span	P1-H1	Left OH	Right OH	Engineering
LEEBLATTER	V6	1	VL.SB	40612	6	0	0	T2668841

LEE & ANGIE BLATTER

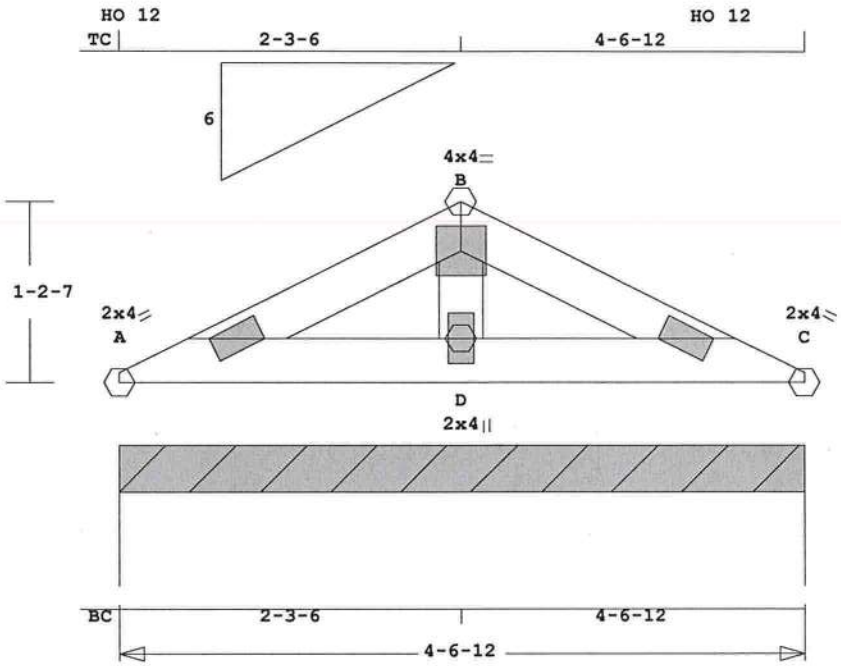

ALL PLATES ARE MT2020

Scale: 0.781" = 1'

Robbins Engineering, Inc./Online Plus™ APPROX. TRUSS WEIGHT: 17.4 LBS

Online Plus -- Version 21.0.060
RUN DATE: 06-SEP-07

	CSI	-Size-	----Lumber----
TC	0.03	2x 4	SP-#2
BC	0.03	2x 4	SP-#2
WB	0.01	2x 4	SP-#2

Brace truss as follows:

	O.C.	From	To
TC	Cont.	0- 0- 0	4- 6-12
BC	Cont.	0- 0- 0	4- 6-12

psf-Ld	Dead	Live
TC	10.0	20.0
BC	10.0	0.0
TC+BC	20.0	20.0

Total 40.0 Spacing 24.0"
Lumber Duration Factor 1.25
Plate Duration Factor 1.25
TC Fb=1.15 Fc=1.10 Ft=1.10
BC Fb=1.10 Fc=1.10 Ft=1.10

Total Load Reactions (Lbs)

Jt	Down	Uplift	Horiz-
A	430	59 U	28 R

Jt	Brg Size	Required
A	54.8"	0"-to- 55"

Plus 9 Wind Load Case(s)
Plus 1 UBC LL Load Case(s)

Membr	CSI	P Lbs	Axl-CSI-Bnd
----------Top Chords----------			
A -B	0.03	45 T	0.00 0.03
B -C	0.03	45 T	0.00 0.03
--------Bottom Chords---------			
A -D	0.03	2 T	0.00 0.03
D -C	0.03	2 T	0.00 0.03

----------Webs----------
D -B 0.01 124 T

TL Defl 0.00" in D -C L/999
LL Defl 0.00" in D -C L/999
Shear // Grain in A -B 0.08

Plates for each ply each face.
Plate - MT20 20 Ga, Gross Area
Plate - MT2H 20 Ga, Gross Area

Jt	Type	Plt Size	X	Y	JSI
A	MT20	2.0x 4.0	Ctr	Ctr	0.65
B	MT20	4.0x 4.0	Ctr	Ctr	0.43
C	MT20	2.0x 4.0	Ctr	Ctr	0.65
D	MT20	2.0x 4.0	Ctr	Ctr	0.38

REVIEWED BY:
Robbins Engineering, Inc.
6904 Parke East Blvd.
Tampa, FL 33610

REFER TO ROBBINS ENG. GENERAL NOTES AND SYMBOLS SHEET FOR ADDITIONAL SPECIFICATIONS.
NOTES:
Trusses Manufactured by:
Mayo Truss Co. Inc.
Analysis Conforms To:
FBC2004
Design checked for 10 psf non-concurrent LL on BC.
Wind Loads - ANSI / ASCE 7-02
Truss is designed as
Components and Claddings*
for Exterior zone location.
Wind Speed: 110 mph
Mean Roof Height: 15-0
Exposure Category: B
Occupancy Factor : 1.00

Building Type: Enclosed
TC Dead Load: 5.0 psf
BC Dead Load: 5.0 psf
Max comp. force 80 Lbs
Max tens. force 124 Lbs
Quality Control Factor 1.25

Philip J. O'Regan, FL Lic. #58126
Robbins Engineering
6904 Parke East Blvd
Tampa, FL, 33610
FL Cert.#5555

Job	Mark	Quan	Type	Span	P1-H1	Left OH	Right OH	Engineering
LEEBLATTER	V7	1	VL.SB	180612	6	0	0	T2668842

LEE & ANGIE BLATTER

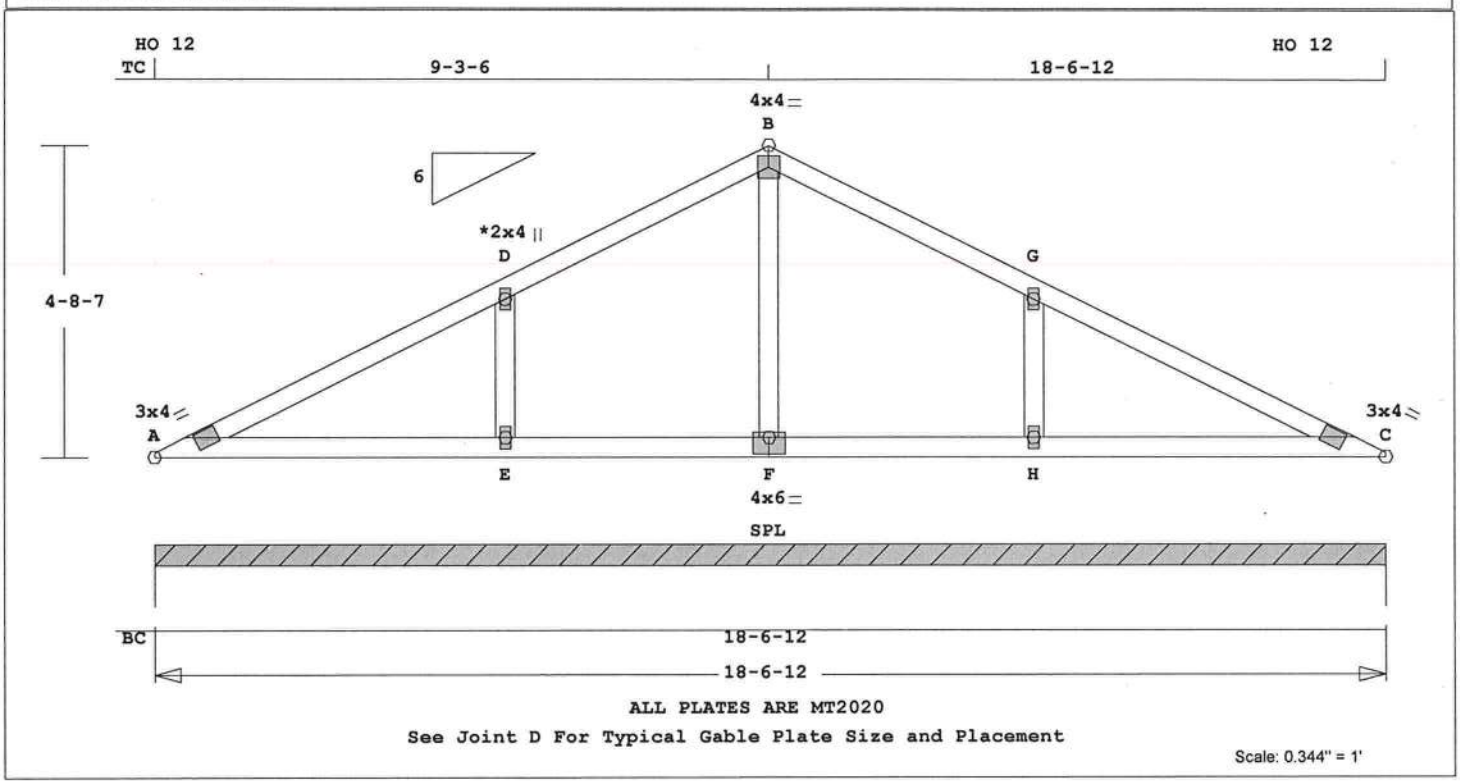

Robbins Engineering, Inc./Online Plus™ APPROX. TRUSS WEIGHT: 88.2 LBS

Online Plus -- Version 21.0.060
RUN DATE: 06-SEP-07

	CSI	-Size-	----Lumber----
TC	0.22	2x 4	SP-#2
BC	0.13	2x 4	SP-#2
GW	0.04	2x 4	SP-#2

Brace truss as follows:

	O.C.	From	To
TC	Cont.	0- 0- 0	18- 6-12
BC	Cont.	0- 0- 0	18- 6-12

psf-Ld	Dead	Live
TC	10.0	20.0
BC	10.0	0.0
TC+BC	20.0	20.0

Total 40.0 Spacing 24.0"
Lumber Duration Factor 1.25
Plate Duration Factor 1.25
TC Fb=1.15 Fc=1.10 Ft=1.10
BC Fb=1.10 Fc=1.10 Ft=1.10

Total Load Reactions (Lbs)

Jt	Down	Uplift	Horiz-
A	1751	197 U	159 R

Jt	Brg Size	Required
A	222.8"	0"-to- 223"

Plus 9 Wind Load Case(s)
Plus 1 UBC LL Load Case(s)

Membr	CSI	P Lbs	Axl-CSI-Bnd
----------Top Chords----------			
A -D	0.22	57 C	0.00 0.22
D -B	0.22	126 T	0.00 0.22
B -G	0.22	126 T	0.00 0.22
G -C	0.22	57 C	0.00 0.22
--------Bottom Chords---------			
A -E	0.13	2 T	0.00 0.13
E -F	0.13	0 T	0.00 0.13
F -H	0.13	0 T	0.00 0.13
H -C	0.13	2 T	0.00 0.13
----------Gable Webs----------			
E -D	0.04	307 T	
F -B	0.03	159 C	
H -G	0.04	307 T	

TL Defl -0.03" in H -C L/999
LL Defl -0.01" in H -C L/999
Shear // Grain in A -D 0.18

Plates for each ply each face.
Plate - MT20 20 Ga, Gross Area
Plate - MT2H 20 Ga, Gross Area

Jt	Type	Plt Size	X	Y	JSI
A	MT20	3.0x 4.0	Ctr	Ctr	0.74
D	MT20	2.0x 4.0	Ctr	Ctr	0.00
B	MT20	4.0x 4.0	Ctr	Ctr	0.62
G	MT20	2.0x 4.0	Ctr	Ctr	0.00
C	MT20	3.0x 4.0	Ctr	Ctr	0.74
E	MT20	2.0x 4.0	Ctr	Ctr	0.00
F	MT20	4.0x 6.0	Ctr	-1.0	0.55
H	MT20	2.0x 4.0	Ctr	Ctr	0.00

REVIEWED BY:
Robbins Engineering, Inc.
6904 Parke East Blvd.
Tampa, FL 33610

REFER TO ROBBINS ENG. GENERAL NOTES AND SYMBOLS SHEET FOR ADDITIONAL SPECIFICATIONS.
NOTES:
Trusses Manufactured by:
Mayo Truss Co. Inc.
Analysis Conforms To:
FBC2004

Design checked for 10 psf non-concurrent LL on BC.
Wind Loads - ANSI / ASCE 7-02
Truss is designed as
Components and Claddings*
for Exterior zone location.
Wind Speed: 110 mph
Mean Roof Height: 15-0
Exposure Category: B
Occupancy Factor : 1.00
Building Type: Enclosed
TC Dead Load: 5.0 psf
BC Dead Load: 5.0 psf
Max comp. force 299 Lbs
Max tens. force 307 Lbs
Quality Control Factor 1.25

Philip J. O'Regan, FL Lic. #58126
Robbins Engineering
6904 Parke East Blvd
Tampa, FL, 33610
FL Cert.#5555

Job	Mark	Quan	Type	Span	P1-H1	Left OH	Right OH	Engineering
LEEBLATTER	V8	1	VL.SB	140612	6	0	0	T2668843

LEE & ANGIE BLATTER

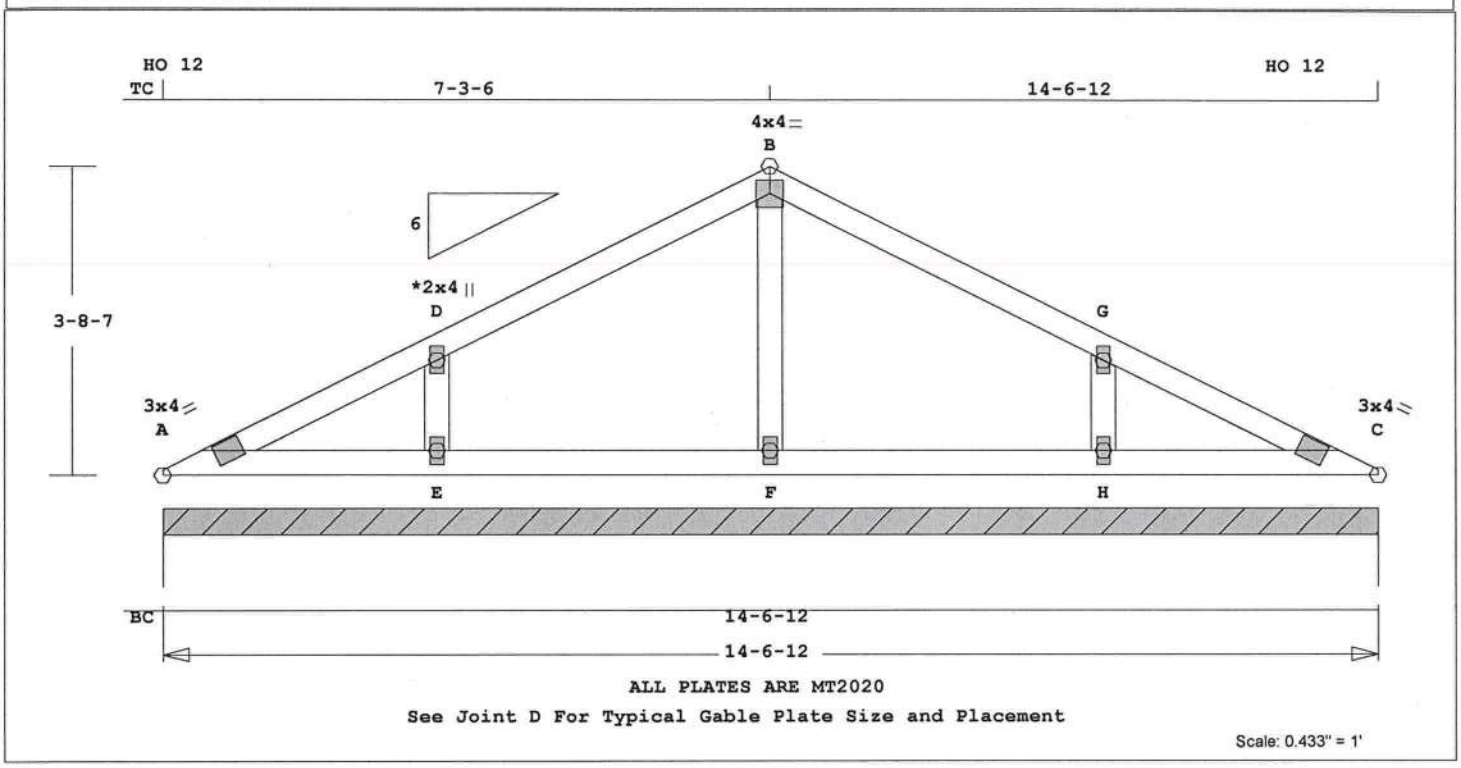

Robbins Engineering, Inc./Online Plus™ APPROX. TRUSS WEIGHT: 66.5 LBS

Online Plus -- Version 21.0.060
RUN DATE: 06-SEP-07

	CSI	-Size-	----Lumber----
TC	0.15	2x 4	SP-#2
BC	0.09	2x 4	SP-#2
GW	0.04	2x 4	SP-#2

Brace truss as follows:

	O.C.	From	To
TC	Cont.	0- 0- 0	14- 6-12
BC	Cont.	0- 0- 0	14- 6-12

psf-Ld	Dead	Live
TC	10.0	20.0
BC	10.0	0.0
TC+BC	20.0	20.0

Total 40.0 Spacing 24.0"
Lumber Duration Factor 1.25
Plate Duration Factor 1.25
TC Fb=1.15 Fc=1.10 Ft=1.10
BC Fb=1.10 Fc=1.10 Ft=1.10

Total Load Reactions (Lbs)

Jt	Down	Uplift	Horiz-
A	1289	141 U	113 R

Jt	Brg Size	Required
A	174.8"	0"-to- 175"

Plus 9 Wind Load Case(s)
Plus 1 UBC LL Load Case(s)

Membr	CSI	P Lbs	Axl-CSI-Bnd
----------Top Chords----------			
A -D	0.14	50 C	0.00 0.14
D -B	0.15	115 T	0.01 0.14
B -G	0.15	115 T	0.01 0.14
G -C	0.14	50 C	0.00 0.14
--------Bottom Chords---------			
A -E	0.06	2 T	0.00 0.06
E -F	0.09	0 T	0.00 0.09
F -H	0.09	0 T	0.00 0.09
H -C	0.06	2 T	0.00 0.06
----------Gable Webs----------			
E -D	0.04	279 T	
F -B	0.02	177 C	
H -G	0.04	279 T	

TL Defl -0.01" in E -F L/999
LL Defl 0.00" in E -F L/999
Shear // Grain in D -B 0.15

Plates for each ply each face.
Plate - MT20 20 Ga, Gross Area
Plate - MT2H 20 Ga, Gross Area

Jt	Type	Plt Size	X	Y	JSI
A	MT20	3.0x 4.0	Ctr	Ctr	0.68
D	MT20	2.0x 4.0	Ctr	Ctr	0.00
B	MT20	4.0x 4.0	Ctr	Ctr	0.56
G	MT20	2.0x 4.0	Ctr	Ctr	0.00
C	MT20	3.0x 4.0	Ctr	Ctr	0.68
E	MT20	2.0x 4.0	Ctr	Ctr	0.00
F	MT20	2.0x 4.0	Ctr	Ctr	0.00
H	MT20	2.0x 4.0	Ctr	Ctr	0.00

REVIEWED BY:
Robbins Engineering, Inc.
6904 Parke East Blvd.
Tampa, FL 33610

REFER TO ROBBINS ENG. GENERAL NOTES AND SYMBOLS SHEET FOR ADDITIONAL SPECIFICATIONS.

NOTES:
Trusses Manufactured by:
Mayo Truss Co. Inc.
Analysis Conforms To:
FBC2004
Design checked for 10 psf non-concurrent LL on BC.

Wind Loads - ANSI / ASCE 7-02
Truss is designed as
Components and Claddings*
for Exterior zone location.
Wind Speed: 110 mph
Mean Roof Height: 15-0
Exposure Category: B
Occupancy Factor : 1.00
Building Type: Enclosed
TC Dead Load: 5.0 psf
BC Dead Load: 5.0 psf
Max comp. force 231 Lbs
Max tens. force 279 Lbs
Quality Control Factor 1.25

Philip J. O'Regan, FL Lic. #58126
Robbins Engineering
6904 Parke East Blvd
Tampa, FL, 33610
FL Cert.#5555

Job	Mark	Quan	Type	Span	P1-H1	Left OH	Right OH	Engineering
LEEBLATTER	V9	1	VL.SB	100612	6	0	0	T2668844

LEE & ANGIE BLATTER

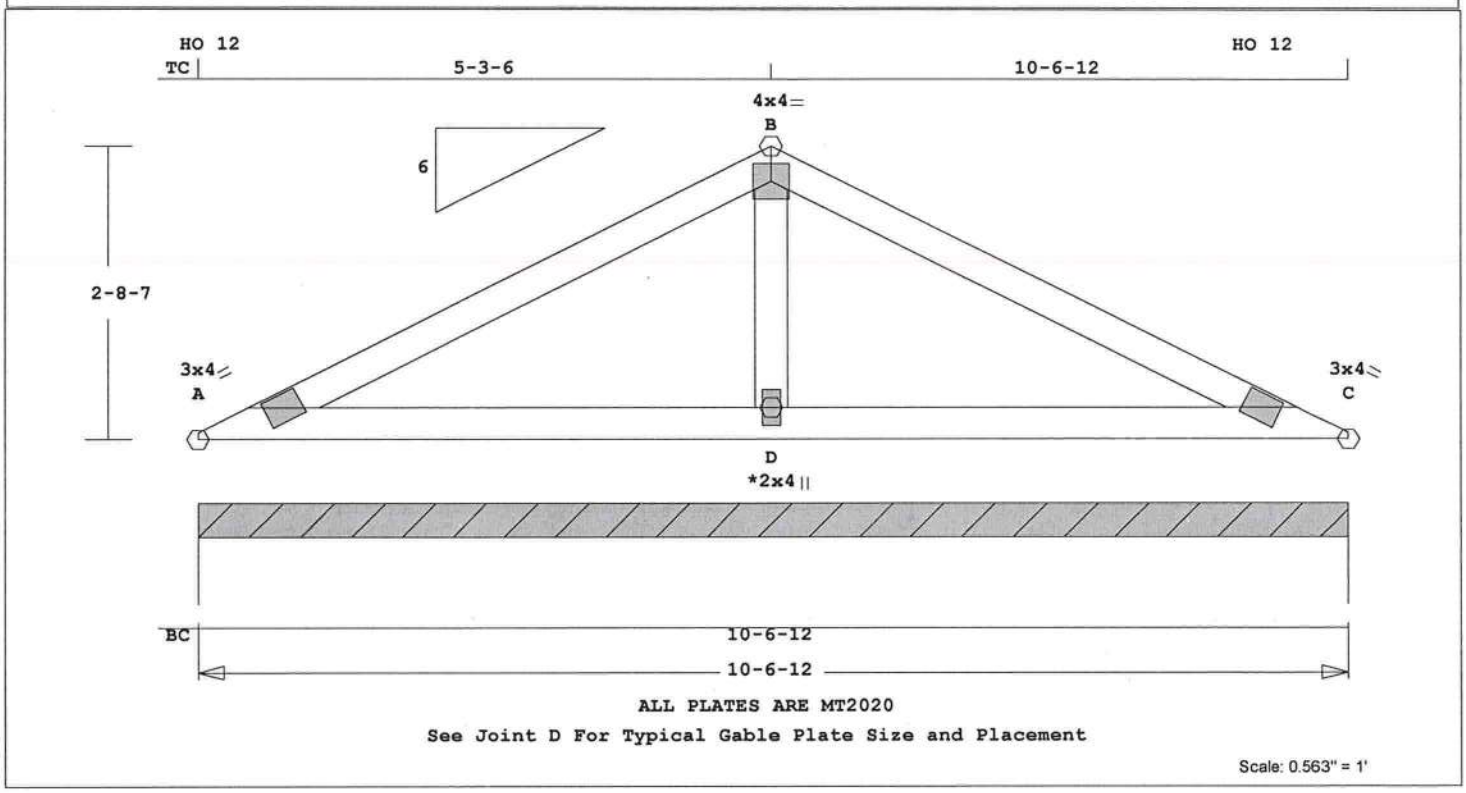

Robbins Engineering, Inc./Online Plus™ APPROX. TRUSS WEIGHT: 44.3 LBS

Online Plus -- Version 21.0.060
RUN DATE: 06-SEP-07

	CSI	-Size-	----Lumber----
TC	0.20	2x 4	SP-#2
BC	0.17	2x 4	SP-#2
GW	0.03	2x 4	SP-#2

Brace truss as follows:

	O.C.	From	To
TC	Cont.	0- 0- 0	10- 6-12
BC	Cont.	0- 0- 0	10- 6-12

psf-Ld	Dead	Live
TC	10.0	20.0
BC	10.0	0.0
TC+BC	20.0	20.0

Total 40.0 Spacing 24.0"
Lumber Duration Factor 1.25
Plate Duration Factor 1.25
TC Fb=1.15 Fc=1.10 Ft=1.10
BC Fb=1.10 Fc=1.10 Ft=1.10

Total Load Reactions (Lbs)

Jt	Down	Uplift	Horiz-
A	1159	167 U	79 R

Jt	Brg Size	Required
A	126.8"	0"-to- 127"

Plus 9 Wind Load Case(s)
Plus 1 UBC LL Load Case(s)

Membr	CSI	P Lbs	Axl-CSI-Bnd
----------Top Chords----------			
A -B	0.20	121 T	0.01 0.19
B -C	0.20	121 T	0.01 0.19
--------Bottom Chords---------			
A -D	0.17	2 T	0.00 0.17
D -C	0.17	2 T	0.00 0.17

----------Gable Webs----------
D -B 0.03 222 T

TL Defl -0.02" in D -C L/999
LL Defl -0.01" in D -C L/999
Shear // Grain in A -B 0.20

Plates for each ply each face.
Plate - MT20 20 Ga, Gross Area
Plate - MT2H 20 Ga, Gross Area

Jt	Type	Plt Size	X	Y	JSI
A	MT20	3.0x 4.0	Ctr	Ctr	0.61
B	MT20	4.0x 4.0	Ctr	Ctr	0.51
C	MT20	3.0x 4.0	Ctr	Ctr	0.61
D	MT20	2.0x 4.0	Ctr	Ctr	0.00

REVIEWED BY:
Robbins Engineering, Inc.
6904 Parke East Blvd.
Tampa, FL 33610

REFER TO ROBBINS ENG. GENERAL NOTES AND SYMBOLS SHEET FOR ADDITIONAL SPECIFICATIONS.
NOTES:
Trusses Manufactured by:
Mayo Truss Co. Inc.
Analysis Conforms To:
FBC2004
Design checked for 10 psf non-concurrent LL on BC.
Wind Loads - ANSI / ASCE 7-02
Truss is designed as
Components and Claddings*
for Exterior zone location.
Wind Speed: 110 mph
Mean Roof Height: 15-0
Exposure Category: B
Occupancy Factor : 1.00

Building Type: Enclosed
TC Dead Load: 5.0 psf
BC Dead Load: 5.0 psf
Max comp. force 212 Lbs
Max tens. force 222 Lbs
Quality Control Factor 1.25

Philip J. O'Regan, FL Lic. #58126
Robbins Engineering
6904 Parke East Blvd
Tampa, FL, 33610
FL Cert.#5555

ROBBINS ENG. GENERAL NOTES & SYMBOLS

PLATE LOCATION

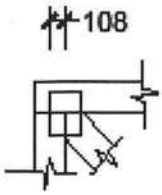

Center plates on joints unless otherwise noted in plate list or on drawing. Dimensions are given in inches (i.e. 1 1/2" or 1.5") or IN-16ths (i.e. 108)

FLOOR TRUSS SPLICE

(3X2, 4X2, 6X2)

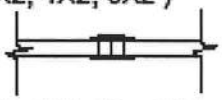

(W) = Wide Face Plate
(N) = Narrow Face Plate

LATERAL BRACING

Designates the location for continuous lateral bracing (CLB) for support of individual truss members only. CLBs must be properly anchored or restrained to prevent simultaneous buckling of adjacent truss members.

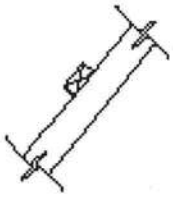

PLATE SIZE AND ORIENTATION

3x5 ||

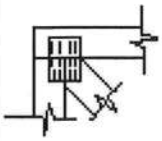

The first dimension is the width measured perpendicular to slots. The second dimension is the length measured parallel to slots. Plate orientation, shown next to plate size, indicates direction of slots in connector plates.

DIMENSIONS

All dimensions are shown in FT-IN-SX (i.e. 6' 8 1/2" or 6-08-08). Dimensions less than one foot are shown in IN-SX only (i.e. 708).

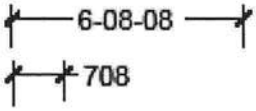

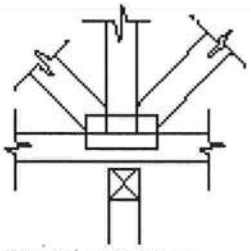

W = Actual Bearing Width (IN-SX)
R = Reaction (lbs.)
U = Uplift (lbs.)

BEARING

When truss is designed to bear on multiple supports, interior bearing locations should be marked on the truss. Interior support or temporary shoring must be in place before erecting this truss. If necessary, shim bearings to assure solid contact with truss.

ROBBINS connector plates shall be applied on both faces of truss at each joint. Center the plates, unless indicated otherwise. No loose knots or wane in plate contact area. Splice only where shown. Overall spans assume 4" bearing at each end, unless indicated otherwise. Cutting and fabrication shall be performed using equipment which produces snug-fitting joints and plates. Unless otherwise noted, moisture content of lumber shall not exceed 19% at time of fabrication and the attached truss designs are not applicable for use with fire retardant lumber and some preservative treatments. Nails specified on truss design drawings refer to common wire nails, except as noted.
The attached design drawings were prepared in accordance with " National Design Specifications for Wood Construction" (AF & PA)," National Design Standard for Metal Plate Connected Wood Truss Construction" (ANSI/TPI 1), and HUD Design Criteria for Trussed Rafters.

Robbins Eng. Co. bears no responsibility for the erection of trusses, field bracing or permanent truss bracing. Refer to BCSI 1-03 as published by Truss Plate Institute, 218 North Lee Street, Suite 312, Alexandria, Virginia 22314. Persons erecting trusses are cautioned to seek professional advice concerning proper erection bracing to prevent toppling and " dominoing ". Care should be taken to prevent damage during fabrication, storage, shipping and erection. Top and bottom chords shall be adequately braced in the absence of sheathing or rigid ceiling, respectively. It is the responsibility of others to ascertain that design loads utilized on these drawings meet or exceed the actual dead loads imposed by the structure and the live loads imposed by the local building code or historical climatic records.

FURNISH A COPY OF THE ATTACHED TRUSS DESIGN DRAWINGS TO ERECTION CONTRACTOR. IT IS THE RESPONSIBILITY OF THE BUILDING DESIGNER TO REVIEW THESE DRAWINGS AND VERIFY THAT DATA, INCLUDING DIMENSIONS & LOADS, CONFORM TO ARCHITECTURAL PLAN / SPECS AND THE TRUSS PLACEMENT DIAGRAM FURNISHED BY THE TRUSS FABRICATOR.

Robbins Engineering, Inc.

6904 Parke East Blvd.
Tampa, Fl 33610-4115
Tel: 813-972-1135 Fax: 813-971-6117

www.robbinseng.com

#25855

Mark Disosway, P.E.
POB 868, Lake City, FL 32056, Ph (386) 754-5419, Fax (386) 269-4871

September 11, 2007

Building Department

Re: Lee & Angie Blatter, 187 SW Velma Glen Lake City, Florida

Dear Building Official:

- Please accept this letter as addendum to the plans to use threaded rods in place of 1/2" anchor bolts, SP4 stud straps, and header straps.
- Threaded rods are to be 1/2"-13, 36ksi, A36 or equivalent. Attach rods to foundation with Simpson AT with 6" embedment in concrete filled CMU stemwall foundation or monolythic concrete foundation. Place 2"x2"x.125" washer and nut on top of top plate. Place rods at each side of each corner, each side of each opening, and 5'4"OC. Where header or girder uplift exceeds 1500 lb use 12" embedment and 3"x3"x.187" washer for up to 3750 lb uplift.

11Sep07

Mark Disosway, PE
Florida Registered Professional Engineer

Cc Lee & Angie Blatter

ITW Building Components Group, Inc.

1950 Marley Drive Haines City, FL 33844
Florida Engineering Certificate of Authorization Number: 567
Florida Certificate of Product Approval # FL1999
 Document ID:1TAA8228Z0129112124

Truss Fabricator: Anderson Truss Company
Job Identification: 7-256--OWNER BUILDER Lee Blatter -- 965-7931 , **
Truss Count: 28
Model Code: Florida Building Code 2004 and 2006 Supplement
Truss Criteria: ANSI/TPI-2002(STD)/FBC
Engineering Software: Alpine Software,Versions 7.24, 7.25.
Structural Engineer of Record: The identity of the structural EOR did not exist as of
Address: the seal date per section 61G15-31.003(5a) of the FAC
Minimum Design Loads: Roof - 32.0 PSF @ 1.25 Duration
Floor - N/A
Wind - 110 MPH ASCE 7-02 -Closed

Seal Date: 08/29/2007

-Truss Design Engineer-
James F. Collins Jr.
Florida License Number: 52212
1950 Marley Drive
Haines City, FL 33844

Notes:

1. Determination as to the suitability of these truss components for the structure is the responsibility of the building designer/engineer of record, as defined in ANSI/TPI 1
2. The drawing date shown on this index sheet must match the date shown on the individual truss component drawing.
3. As shown on attached drawings; the drawing number is preceded by: HCUSR8228

Details: BRCLBSUB-A11015EE-GBLLETIN-PIGBACKA-PIGBACKB-VALTRUSS-

#	Ref Description	Drawing#	Date
1	75869--A11	07241005	08/29/07
2	75870--A10	07241006	08/29/07
3	75871--A1	07241007	08/29/07
4	75872--A5	07241008	08/29/07
5	75873--A4	07241010	08/29/07
6	75874--A2	07241009	08/29/07
7	75875--A3	07241011	08/29/07
8	75876--A9-GDR	07241013	08/29/07
9	75877--A7	07241014	08/29/07
10	75878--A8-GDR	07241015	08/29/07
11	75879--A-GE	07241016	08/29/07
12	75880--A6	07241017	08/29/07
13	75881--B1	07241018	08/29/07
14	75882--B-GE	07241019	08/29/07
15	75883--AP1	07241001	08/29/07
16	75884--AP2	07241002	08/29/07
17	75885--V1	07241003	08/29/07
18	75886--V5	07241004	08/29/07
19	75887--V6	07241020	08/29/07
20	75888--V7	07241021	08/29/07
21	75889--V8	07241022	08/29/07
22	75890--V9	07241023	08/29/07
23	75891--V10	07241024	08/29/07
24	75892--V11	07241025	08/29/07
25	75893--V12	07241026	08/29/07
26	75894--V2	07241027	08/29/07
27	75895--V3	07241028	08/29/07
28	75896--V4	07241029	08/29/07

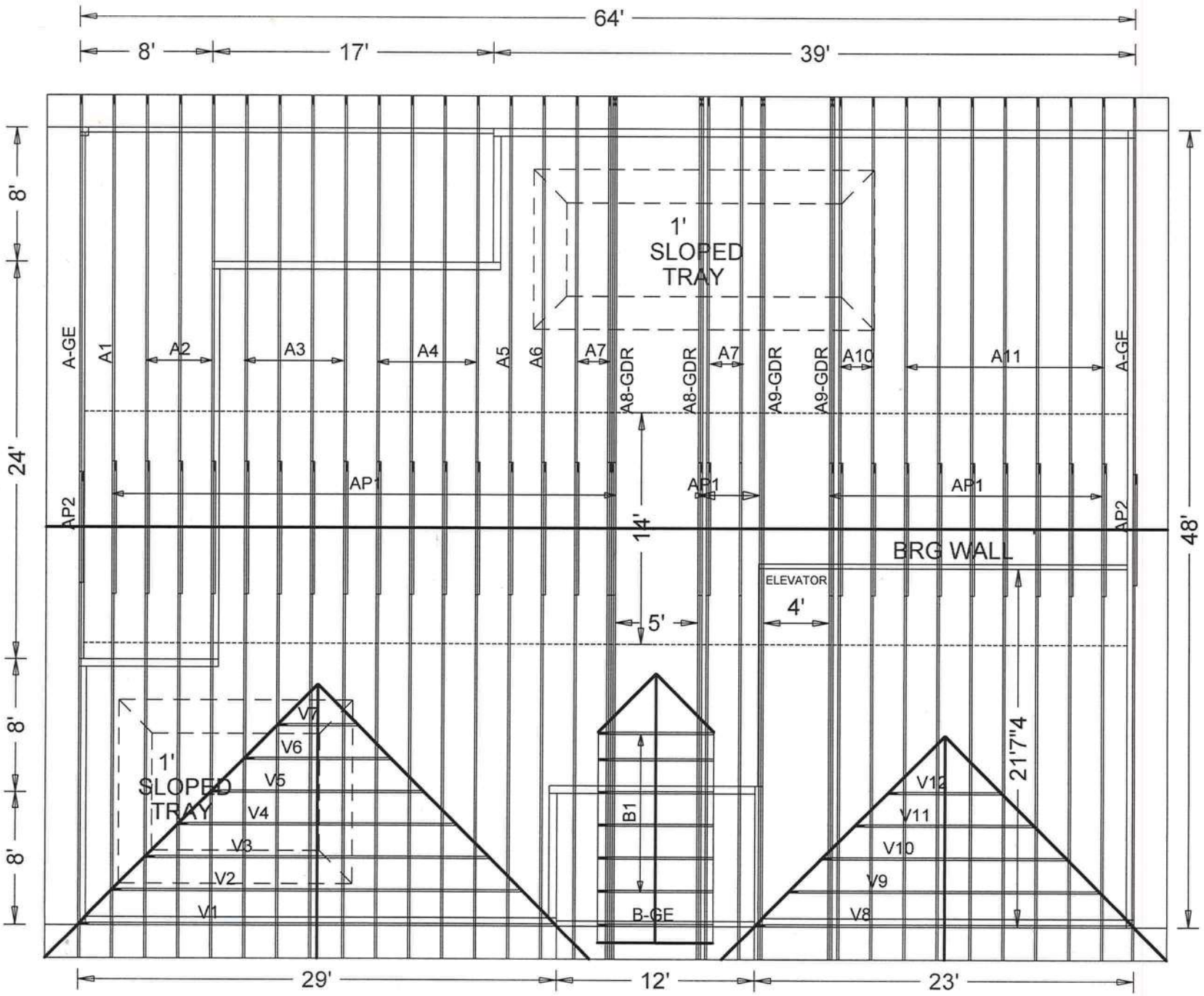

#7-256
LEE BLATTER

JOB DESCRIPTION:: OWNER BUILDER
/: Lee Blatter

JOB NO:
7-256

PAGE NO:
1 OF 1

Top chord 2x4 SP #2 Dense :T2, T4 2x8 SP SS:
Bot chord 2x8 SP SS :B2 2x10 SP SS:
:B3 2x4 SP #2 Dense:
Webs 2x4 SP #3

Calculated horizontal deflection is 0.13" due to live load and 0.25" due to dead load.

Collar-tie braced with continuous lateral bracing at 24" OC. or rigid ceiling.

Deflection meets L/360 live and L/240 total load. Creep increase factor for dead load is 1.50.

110 mph wind, 15.00 ft mean hgt, ASCE 7-02, CLOSED bldg, Located anywhere in roof, CAT II, EXP B, wind TC DL=5.0 psf, wind BC DL=5.0 psf. Iw=1.00 GCpi(+/-)=0.18

Wind reactions based on MWFRS pressures.

(A) Continuous lateral bracing equally spaced on member.

BC attic room floor loading: LL = 40.00 psf; DL = 10.00 psf; from 17-0-0 to 31-0-0.

WARNING: Furnish a copy of this DWG to the installation contractor. Special care must be taken during handling, shipping and installation of trusses. See "WARNING" note below.

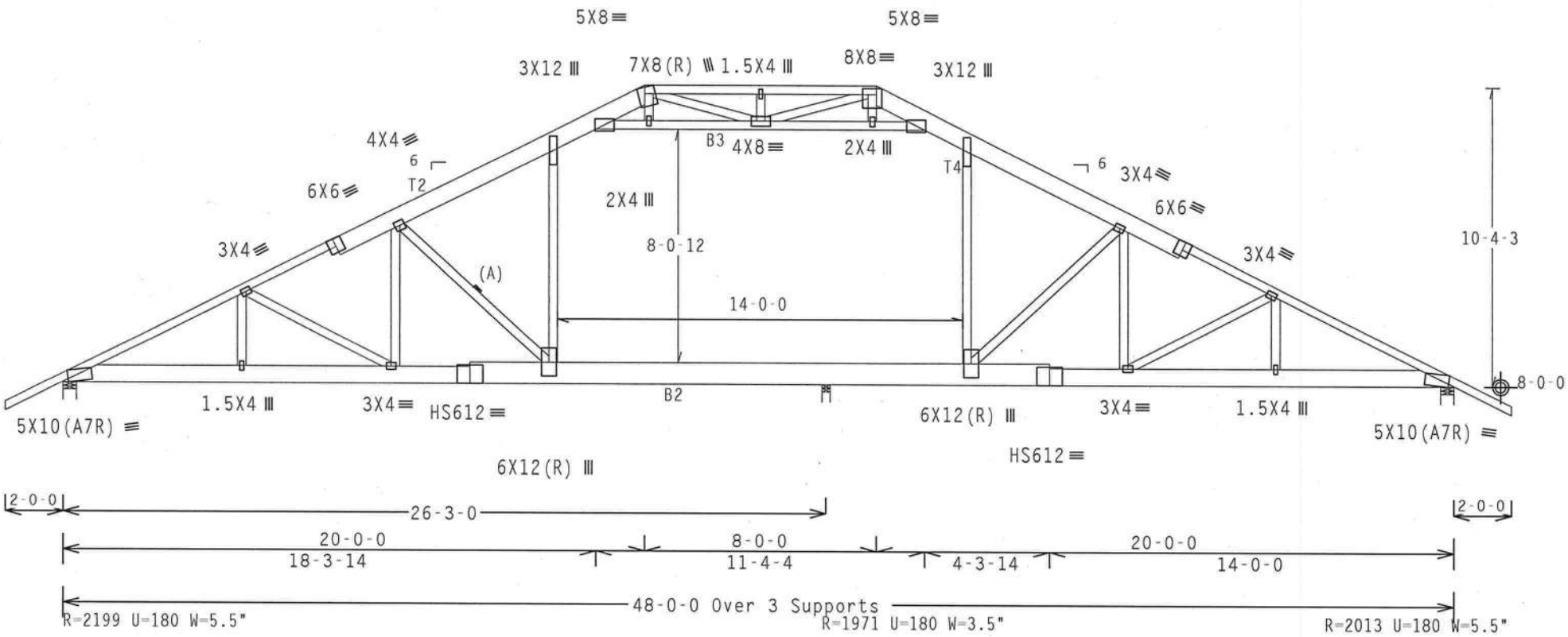

Design Crit: TPI-2002(STD)/FBC

PLT TYP. 20 Gauge HS,Wave Cq/RT=1.00(1.25)/10(0) 7.24.1230 1[illegible] QTY:7 FL/-/4/-/-/R/- Scale =.1875"/Ft.

ALPINE

ITW Building Components Group, Inc.
Haines City, FL 33844
FL Certificate of Authorization #[illegible]

WARNING TRUSSES REQUIRE EXTREME CARE IN FABRICATION, HANDLING, SHIPPING, INSTALLING AND BRACING. REFER TO BCSI (BUILDING COMPONENT SAFETY INFORMATION), PUBLISHED BY TPI (TRUSS PLATE INSTITUTE, 218 NORTH LEE STREET, SUITE 312, ALEXANDRIA, VA, 22314) AND WTCA (WOOD TRUSS COUNCIL OF AMERICA, 6300 ENTERPRISE LANE, MADISON, WI 53719) FOR SAFETY PRACTICES PRIOR TO PERFORMING THESE FUNCTIONS. UNLESS OTHERWISE INDICATED TOP CHORD SHALL HAVE PROPERLY ATTACHED STRUCTURAL PANELS AND BOTTOM CHORD SHALL HAVE A PROPERLY ATTACHED RIGID CEILING.

IMPORTANTFURNISH A COPY OF THIS DESIGN TO THE INSTALLATION CONTRACTOR. ITW BCG, INC. SHALL NOT BE RESPONSIBLE FOR ANY DEVIATION FROM THIS DESIGN; ANY FAILURE TO BUILD THE TRUSS IN COMFORMANCE WITH TPI; OR FABRICATING, HANDLING, SHIPPING, INSTALLING & BRACING OF TRUSSES.
DESIGN CONFORMS WITH APPLICABLE PROVISIONS OF NDS (NATIONAL DESIGN SPEC, BY AF&PA) AND TPI. ITW BCG CONNECTOR PLATES ARE MADE OF 20/18/16GA (W.H/SS/K) ASTM A653 GRADE 40/60 (W. K/H,SS) GALV. STEEL. APPLY PLATES TO EACH FACE OF TRUSS AND, UNLESS OTHERWISE LOCATED ON THIS DESIGN. POSITION PER DRAWINGS 160A-Z. ANY INSPECTION OF PLATES FOLLOWED BY (1) SHALL BE PER ANNEX A3 OF TPI1-2002 SEC.3. A SEAL ON THIS DRAWING INDICATES ACCEPTANCE OF PROFESSIONAL ENGINEERING RESPONSIBILITY SOLELY FOR THE TRUSS COMPONENT DESIGN SHOWN. THE SUITABILITY AND USE OF THIS COMPONENT FOR ANY BUILDING IS THE RESPONSIBILITY OF THE BUILDING DESIGNER PER ANSI/TPI 1 SEC. 2.

JAMES F. COLLINS, JR. LICENSE No. 52212 STATE OF FLORIDA PROFESSIONAL ENGINEER

Aug [illegible]

TC LL	20.0 PSF	REF R8228- 75869
TC DL	10.0 PSF	DATE 08/29/07
BC DL	10.0 PSF	DRW HCUSR8228 07241005
BC LL	0.0 PSF	HC-ENG TCE/AP
TOT.LD.	40.0 PSF	SEQN- 41584
DUR.FAC.	1.25	FROM AH
SPACING	24.0"	JREF- 1TAA8228Z01

Top chord 2x4 SP #2 Dense :T2, T4 2x8 SP SS:
Bot chord 2x8 SP SS :B5 2x10 SP SS:
:B6 2x4 SP #2 Dense:
Webs 2x4 SP #3 :W2, W5 2x4 SP #2 Dense:

Calculated horizontal deflection is 0.15" due to live load and 0.30" due to dead load.

(A) Continuous lateral bracing equally spaced on member.

BC attic room floor loading: LL = 40.00 psf; DL = 10.00 psf; from 17-0-0 to 31-0-0.

Calculated vertical deflection is 0.40" due to live load and 0.76" due to dead load at X = 16-8-8.

(**) 2 plate(s) require special positioning. Refer to scaled plate plot details for special positioning requirements.

110 mph wind, 15.00 ft mean hgt, ASCE 7-02, CLOSED bldg, not located within 6.50 ft from roof edge, CAT II, EXP B, wind TC DL=5.0 psf, wind BC DL=5.0 psf. Iw=1.00 GCpi(+/-)=0.18

Wind reactions based on MWFRS pressures.

Collar-tie braced with continuous lateral bracing at 24" OC. or rigid ceiling.

Deflection meets L/360 live and L/240 total load. Creep increase factor for dead load is 1.50.

WARNING: Furnish a copy of this DWG to the installation contractor. Special care must be taken during handling, shipping and installation of trusses. See "WARNING" note below.

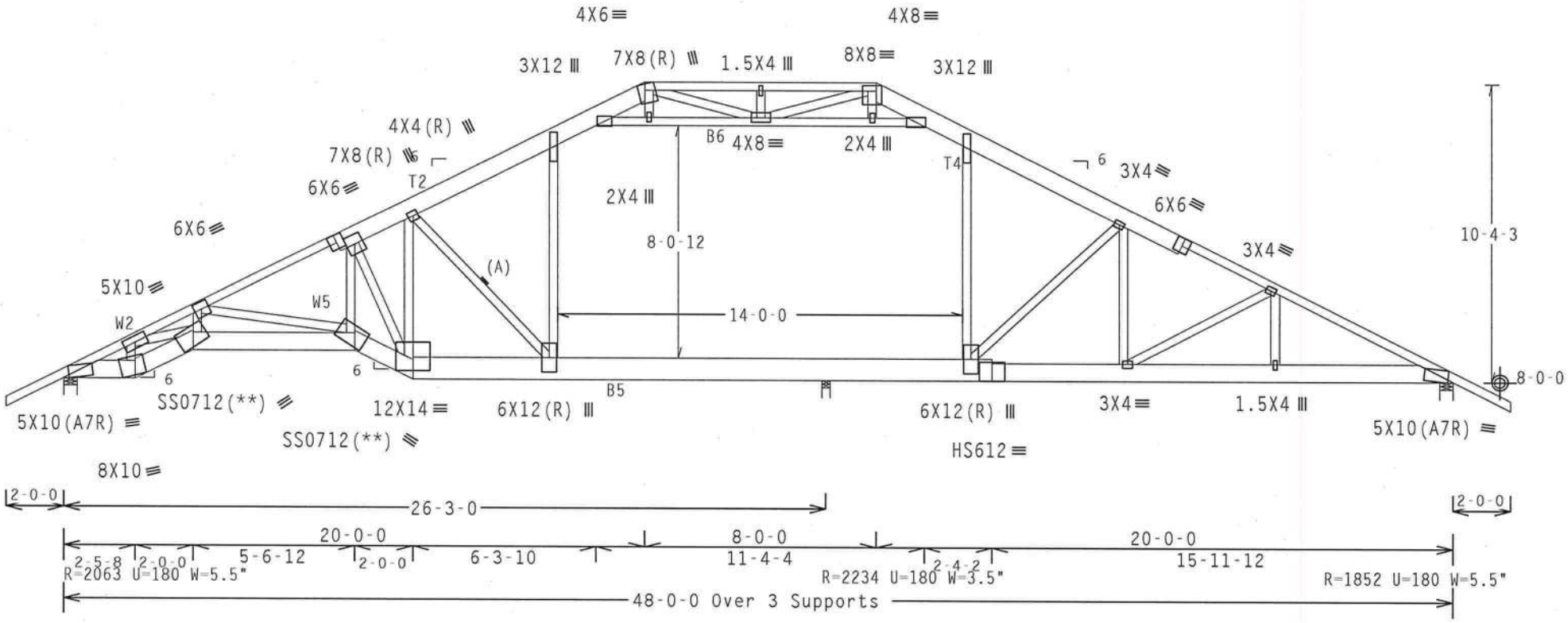

PLT TYP. 20 Gauge HS,18 Gauge HS, Wave Design Crit: TPI-2002(STD)/FBC
Cq/RT=1.00(1.25)/10(0) 7.24.1230 QTY:2 FL/-/4/-/-/R/- Scale =.1875"/Ft.

ALPINE

ITW Building Components Group, Inc.
Haines City, FL 33844
FL Certificate of Authorization # 567

WARNING TRUSSES REQUIRE EXTREME CARE IN FABRICATION, HANDLING, SHIPPING, INSTALLING AND BRACING. REFER TO BCSI (BUILDING COMPONENT SAFETY INFORMATION), PUBLISHED BY TPI (TRUSS PLATE INSTITUTE, 218 NORTH LEE STREET, SUITE 312, ALEXANDRIA, VA, 22314) AND WTCA (WOOD TRUSS COUNCIL OF AMERICA, 6300 ENTERPRISE LANE, MADISON, WI 53719) FOR SAFETY PRACTICES PRIOR TO PERFORMING THESE FUNCTIONS. UNLESS OTHERWISE INDICATED TOP CHORD SHALL HAVE PROPERLY ATTACHED STRUCTURAL PANELS AND BOTTOM CHORD SHALL HAVE A PROPERLY ATTACHED RIGID CEILING.

IMPORTANTFURNISH A COPY OF THIS DESIGN TO THE INSTALLATION CONTRACTOR. ITW BCG, INC. SHALL NOT BE RESPONSIBLE FOR ANY DEVIATION FROM THIS DESIGN; ANY FAILURE TO BUILD THE TRUSS IN COMFORMANCE WITH TPI; OR FABRICATING, HANDLING, SHIPPING, INSTALLING & BRACING OF TRUSSES.
DESIGN CONFORMS WITH APPLICABLE PROVISIONS OF NDS (NATIONAL DESIGN SPEC. BY AF&PA) AND TPI. ITW BCG CONNECTOR PLATES ARE MADE OF 20/18/16GA (W,H/SS/K) ASTM A653 GRADE 40/60 (W, K/H,SS) GALV. STEEL. APPLY PLATES TO EACH FACE OF TRUSS AND. UNLESS OTHERWISE LOCATED ON THIS DESIGN. POSITION PER DRAWINGS 160A-Z. ANY INSPECTION OF PLATES FOLLOWED BY (I) SHALL BE PER ANNEX A3 OF TP11-2002 SEC.3. A SEAL ON THIS DRAWING INDICATES ACCEPTANCE OF PROFESSIONAL ENGINEERING RESPONSIBILITY SOLELY FOR THE TRUSS COMPONENT DESIGN SHOWN. THE SUITABILITY AND USE OF THIS COMPONENT FOR ANY BUILDING IS THE RESPONSIBILITY OF THE BUILDING DESIGNER PER ANSI/TPI 1 SEC. 2.

JAMES F. COLLINS JR. LICENSE No 52212 STATE OF FLORIDA PROFESSIONAL ENGINEER
Aug 29 07

TC LL	20.0 PSF	REF	R8228- 75870
TC DL	10.0 PSF	DATE	08/29/07
BC DL	10.0 PSF	DRW	HCUSR8228 07241006
BC LL	0.0 PSF	HC-ENG	TCE/AP
TOT.LD.	40.0 PSF	SEQN-	41648
DUR.FAC.	1.25	FROM	AH
SPACING	24.0"	JREF-	1TAA8228Z01

Top chord 2x4 SP #2 Dense :T2, T4 2x8 SP SS:
Bot chord 2x8 SP SS :B2 2x10 SP SS:
:B3 2x4 SP #2 Dense:
Webs 2x4 SP #3

SPECIAL LOADS
------(LUMBER DUR.FAC.=1.25 / PLATE DUR.FAC.=1.25)

TC - From	62 PLF at	-2.00 to	62 PLF at	9.40
TC - From	62 PLF at	9.40 to	62 PLF at	17.00
TC - From	85 PLF at	17.00 to	85 PLF at	18.00
TC - From	62 PLF at	18.00 to	62 PLF at	20.00
TC - From	62 PLF at	20.00 to	62 PLF at	28.00
TC - From	62 PLF at	28.00 to	62 PLF at	30.00
TC - From	85 PLF at	30.00 to	85 PLF at	31.00
TC - From	62 PLF at	31.00 to	62 PLF at	38.73
TC - From	62 PLF at	38.73 to	62 PLF at	50.00
PLT- From	20 PLF at	18.83 to	20 PLF at	29.17
BC - From	4 PLF at	-2.00 to	4 PLF at	0.00
BC - From	20 PLF at	0.00 to	20 PLF at	17.00
BC - From	120 PLF at	17.00 to	120 PLF at	31.29
BC - From	20 PLF at	31.29 to	20 PLF at	48.00
BC - From	4 PLF at	48.00 to	4 PLF at	50.00

BC - 151 LB Conc. Load at 17.00, 31.00

Wind reactions based on MWFRS pressures.

110 mph wind, 15.00 ft mean hgt, ASCE 7-02, PART. ENC. bldg, Located anywhere in roof, CAT II, EXP B, wind TC DL=5.0 psf, wind BC DL=5.0 psf. Iw=1.00 GCpi(+/-)=0.55

Calculated horizontal deflection is 0.15" due to live load and 0.28" due to dead load.

(A) 1x4 #3 or better "T" brace. 80% length of web member. Attach with 8d Box or Gun (0.113"x2.5",min.)nails @ 6" OC.

Collar-tie braced with continuous lateral bracing at 24" OC. or rigid ceiling.

Deflection meets L/360 live and L/240 total load. Creep increase factor for dead load is 1.50.

Calculated vertical deflection is 0.40" due to live load and 0.77" due to dead load at X = 16-8-8.

WARNING: Furnish a copy of this DWG to the installation contractor. Special care must be taken during handling, shipping and installation of trusses. See "WARNING" note below.

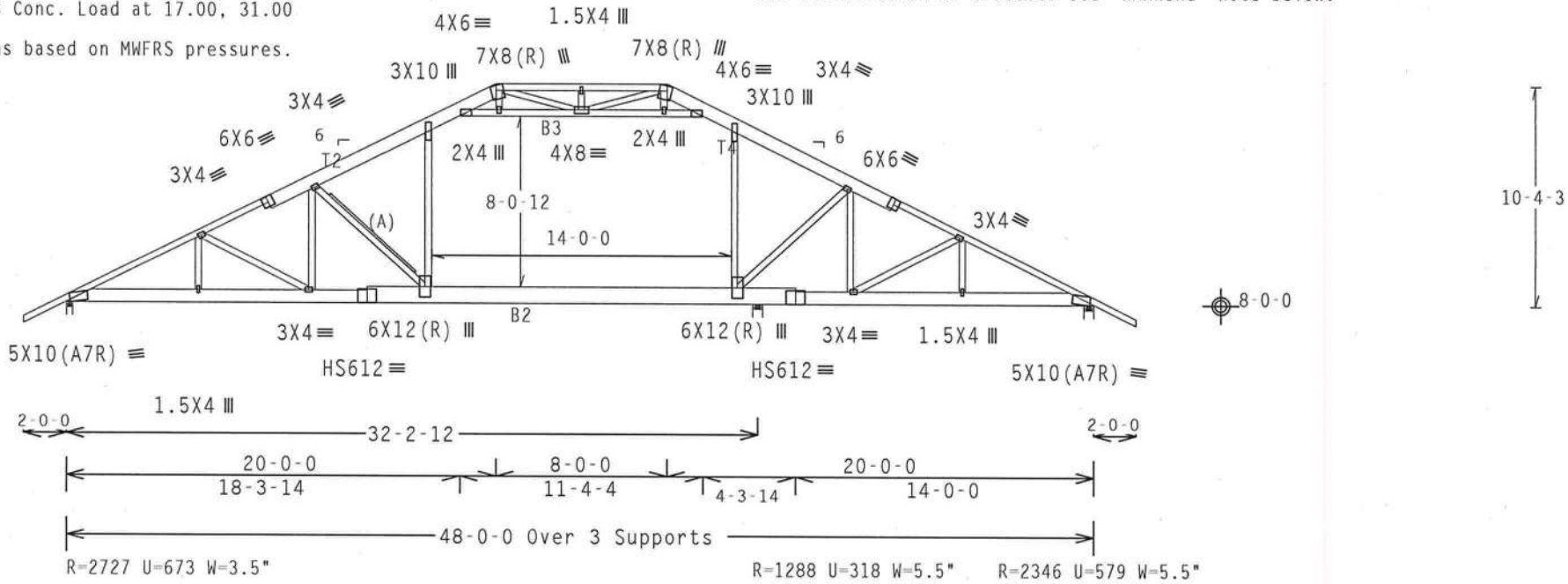

Design Crit: TPI-2002(STD)/FBC

PLT TYP. 20 Gauge HS,Wave Cq/RT=1.00(1.25)/10(0) 7.24.1230 QTY:1 FL/-/4/-/-/R/- Scale =.125"/Ft.

ALPINE

ITW Building Components Group, Inc.
Haines City, FL 33844
FL Certificate of Authorization #567

WARNING TRUSSES REQUIRE EXTREME CARE IN FABRICATION, HANDLING, SHIPPING, INSTALLING AND BRACING. REFER TO BCSI (BUILDING COMPONENT SAFETY INFORMATION), PUBLISHED BY TPI (TRUSS PLATE INSTITUTE, 218 NORTH LEE STREET, SUITE 312, ALEXANDRIA, VA, 22314) AND WTCA (WOOD TRUSS COUNCIL OF AMERICA, 6300 ENTERPRISE LANE, MADISON, WI 53719) FOR SAFETY PRACTICES PRIOR TO PERFORMING THESE FUNCTIONS. UNLESS OTHERWISE INDICATED TOP CHORD SHALL HAVE PROPERLY ATTACHED STRUCTURAL PANELS AND BOTTOM CHORD SHALL HAVE A PROPERLY ATTACHED RIGID CEILING.

IMPORTANTFURNISH A COPY OF THIS DESIGN TO THE INSTALLATION CONTRACTOR. ITW BCG, INC. SHALL NOT BE RESPONSIBLE FOR ANY DEVIATION FROM THIS DESIGN; ANY FAILURE TO BUILD THE TRUSS IN CONFORMANCE WITH TPI; OR FABRICATING, HANDLING, SHIPPING, INSTALLING & BRACING OF TRUSSES.
DESIGN CONFORMS WITH APPLICABLE PROVISIONS OF NDS (NATIONAL DESIGN SPEC, BY AF&PA) AND TPI. ITW BCG CONNECTOR PLATES ARE MADE OF 20/18/16GA (W,H/SS/K) ASTM A653 GRADE 40/60 (W, K/H,SS) GALV. STEEL. APPLY PLATES TO EACH FACE OF TRUSS AND. UNLESS OTHERWISE LOCATED ON THIS DESIGN, POSITION PER DRAWINGS 160A-Z. ANY INSPECTION OF PLATES FOLLOWED BY (I) SHALL BE PER ANNEX A3 OF TPI1-2002 SEC.3. A SEAL ON THIS DRAWING INDICATES ACCEPTANCE OF PROFESSIONAL ENGINEERING RESPONSIBILITY SOLELY FOR THE TRUSS COMPONENT DESIGN SHOWN. THE SUITABILITY AND USE OF THIS COMPONENT FOR ANY BUILDING IS THE RESPONSIBILITY OF THE BUILDING DESIGNER PER ANSI/TPI 1 SEC. 2.

JAMES F. COLLINS JR. LICENSED No. 52212 STATE OF FLORIDA PROFESSIONAL ENGINEER
Aug 29, 07

TC LL	20.0 PSF	REF	R8228- 75871
TC DL	10.0 PSF	DATE	08/29/07
BC DL	10.0 PSF	DRW	HCUSR8228 07241007
BC LL	0.0 PSF	HC-ENG	TCE/AP
TOT.LD.	40.0 PSF	SEQN-	41540
DUR.FAC.	1.25	FROM	AH
SPACING	SEE ABOVE	JREF-	1TAA8228Z01

Top chord 2x4 SP #2 Dense :T2, T4 2x8 SP SS:
Bot chord 2x8 SP SS :B2 2x10 SP SS:
:B3 2x4 SP #2 Dense:
Webs 2x4 SP #3

Calculated horizontal deflection is 0.11" due to live load and 0.20" due to dead load.

Collar-tie braced with continuous lateral bracing at 24" OC. or rigid ceiling.

Deflection meets L/360 live and L/240 total load. Creep increase factor for dead load is 1.50.

* (2) 2x8x10-0-0 SP SS scabs required. Apply one scab to each face of truss, located as shown, and attach each scab with three rows of 0.128"x3.0" 10d Box nails in a staggered pattern throughout, spaced at 0-6-0 oc between nails in a row. Offset nails from opposing faces to prevent splits.

110 mph wind, 15.00 ft mean hgt, ASCE 7-02, CLOSED bldg, Located anywhere in roof, CAT II, EXP B, wind TC DL=5.0 psf, wind BC DL=5.0 psf. Iw=1.00 GCpi(+/-)=0.18

Wind reactions based on MWFRS pressures.

BC attic room floor loading: LL = 40.00 psf; DL = 10.00 psf; from 17-0-0 to 31-0-0.

WARNING: Furnish a copy of this DWG to the installation contractor. Special care must be taken during handling, shipping and installation of trusses. See "WARNING" note below.

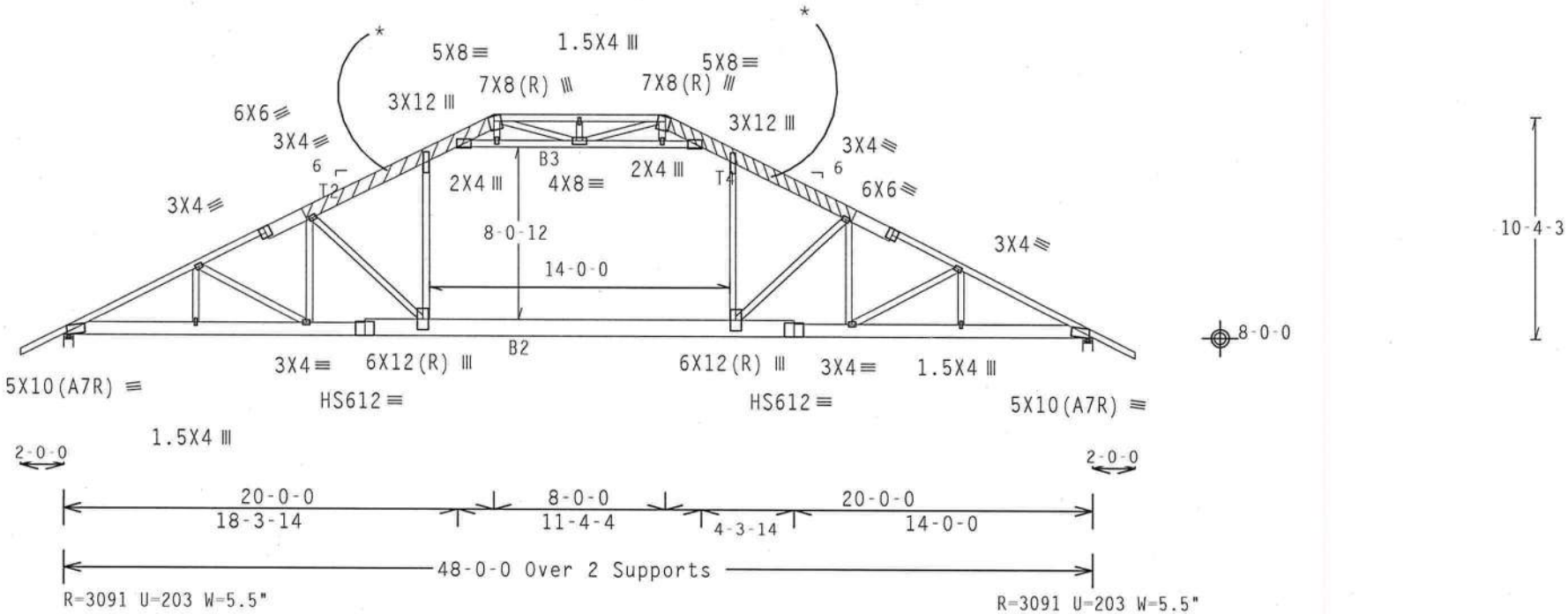

Design Crit: TPI-2002(STD)/FBC

PLT TYP. 20 Gauge HS,Wave Cq/RT=1.00(1.25)/10(0) 7.24.1230.17 QTY:1 FL/-/4/-/-/R/- Scale =.125"/Ft.

ALPINE

ITW Building Components Group, Inc.
Haines City, FL 33844
FL Certificate of Authorization #567

WARNING TRUSSES REQUIRE EXTREME CARE IN FABRICATION, HANDLING, SHIPPING, INSTALLING AND BRACING. REFER TO BCSI (BUILDING COMPONENT SAFETY INFORMATION), PUBLISHED BY TPI (TRUSS PLATE INSTITUTE, 218 NORTH LEE STREET, SUITE 312, ALEXANDRIA, VA, 22314) AND WTCA (WOOD TRUSS COUNCIL OF AMERICA, 6300 ENTERPRISE LANE, MADISON, WI 53719) FOR SAFETY PRACTICES PRIOR TO PERFORMING THESE FUNCTIONS. UNLESS OTHERWISE INDICATED TOP CHORD SHALL HAVE PROPERLY ATTACHED STRUCTURAL PANELS AND BOTTOM CHORD SHALL HAVE A PROPERLY ATTACHED RIGID CEILING.

IMPORTANTFURNISH A COPY OF THIS DESIGN TO THE INSTALLATION CONTRACTOR. ITW BCG, INC. SHALL NOT BE RESPONSIBLE FOR ANY DEVIATION FROM THIS DESIGN; ANY FAILURE TO BUILD THE TRUSS IN COMFORMANCE WITH TPI; OR FABRICATING, HANDLING, SHIPPING, INSTALLING & BRACING OF TRUSSES.
DESIGN CONFORMS WITH APPLICABLE PROVISIONS OF NDS (NATIONAL DESIGN SPEC. BY AF&PA) AND TPI. ITW BCG CONNECTOR PLATES ARE MADE OF 20/18/16GA (W,H/SS/K) ASTM A653 GRADE 40/60 (W, K/H,SS) GALV. STEEL. APPLY PLATES TO EACH FACE OF TRUSS AND. UNLESS OTHERWISE LOCATED ON THIS DESIGN, POSITION PER DRAWINGS 160A-Z. ANY INSPECTION OF PLATES FOLLOWED BY (1) SHALL BE PER ANNEX A3 OF TPI1-2002 SEC.3. A SEAL ON THIS DRAWING INDICATES ACCEPTANCE OF PROFESSIONAL ENGINEERING RESPONSIBILITY SOLELY FOR THE TRUSS COMPONENT DESIGN SHOWN. THE SUITABILITY AND USE OF THIS COMPONENT FOR ANY BUILDING IS THE RESPONSIBILITY OF THE BUILDING DESIGNER PER ANSI/TPI 1 SEC. 2.

JAMES F. COLLINS, JR. LICENSE No 52212 STATE OF FLORIDA PROFESSIONAL ENGINEER

Aug 2

TC LL	20.0 PSF	REF R8228- 75872
TC DL	10.0 PSF	DATE 08/29/07
BC DL	10.0 PSF	DRW HCUSR8228 07241008
BC LL	0.0 PSF	HC-ENG TCE/AP
TOT.LD.	40.0 PSF	SEQN- 41577
DUR.FAC.	1.25	FROM AH
SPACING	24.0"	JREF- 1TAA8228Z01

Top chord 2x4 SP #2 Dense :T2, T4 2x8 SP SS:
Bot chord 2x8 SP SS :B2 2x10 SP SS:
:B3 2x4 SP #2 Dense:
Webs 2x4 SP #3

SPECIAL LOADS
------(LUMBER DUR.FAC.=1.25 / PLATE DUR.FAC.=1.25)

TC - From	62 PLF at	-2.00 to	62 PLF at	9.40
TC - From	62 PLF at	9.40 to	62 PLF at	17.00
TC - From	85 PLF at	17.00 to	85 PLF at	18.00
TC - From	62 PLF at	18.00 to	62 PLF at	20.00
TC - From	62 PLF at	20.00 to	62 PLF at	28.00
TC - From	62 PLF at	28.00 to	62 PLF at	30.00
TC - From	85 PLF at	30.00 to	85 PLF at	31.00
TC - From	62 PLF at	31.00 to	62 PLF at	38.73
TC - From	62 PLF at	38.73 to	62 PLF at	50.00
PLT- From	20 PLF at	18.83 to	20 PLF at	29.17
BC - From	4 PLF at	-2.00 to	4 PLF at	0.00
BC - From	20 PLF at	0.00 to	20 PLF at	17.00
BC - From	120 PLF at	17.00 to	120 PLF at	31.29
BC - From	20 PLF at	31.29 to	20 PLF at	48.00
BC - From	4 PLF at	48.00 to	4 PLF at	50.00

BC - 151 LB Conc. Load at 17.00, 31.00

Wind reactions based on MWFRS pressures.

110 mph wind, 15.00 ft mean hgt, ASCE 7-02, PART._ENC. bldg, Located anywhere in roof, CAT II, EXP B, wind TC DL=5.0 psf, wind BC DL=5.0 psf. Iw=1.00 GCpi(+/-)=0.55

Calculated horizontal deflection is 0.10" due to live load and 0.21" due to dead load.

(A) Continuous lateral bracing equally spaced on member.

Collar-tie braced with continuous lateral bracing at 24" OC. or rigid ceiling.

Deflection meets L/360 live and L/240 total load. Creep increase factor for dead load is 1.50.

Calculated vertical deflection is 0.36" due to live load and 0.79" due to dead load at X = 31-3-8.

WARNING: Furnish a copy of this DWG to the installation contractor. Special care must be taken during handling, shipping and installation of trusses. See "WARNING" note below.

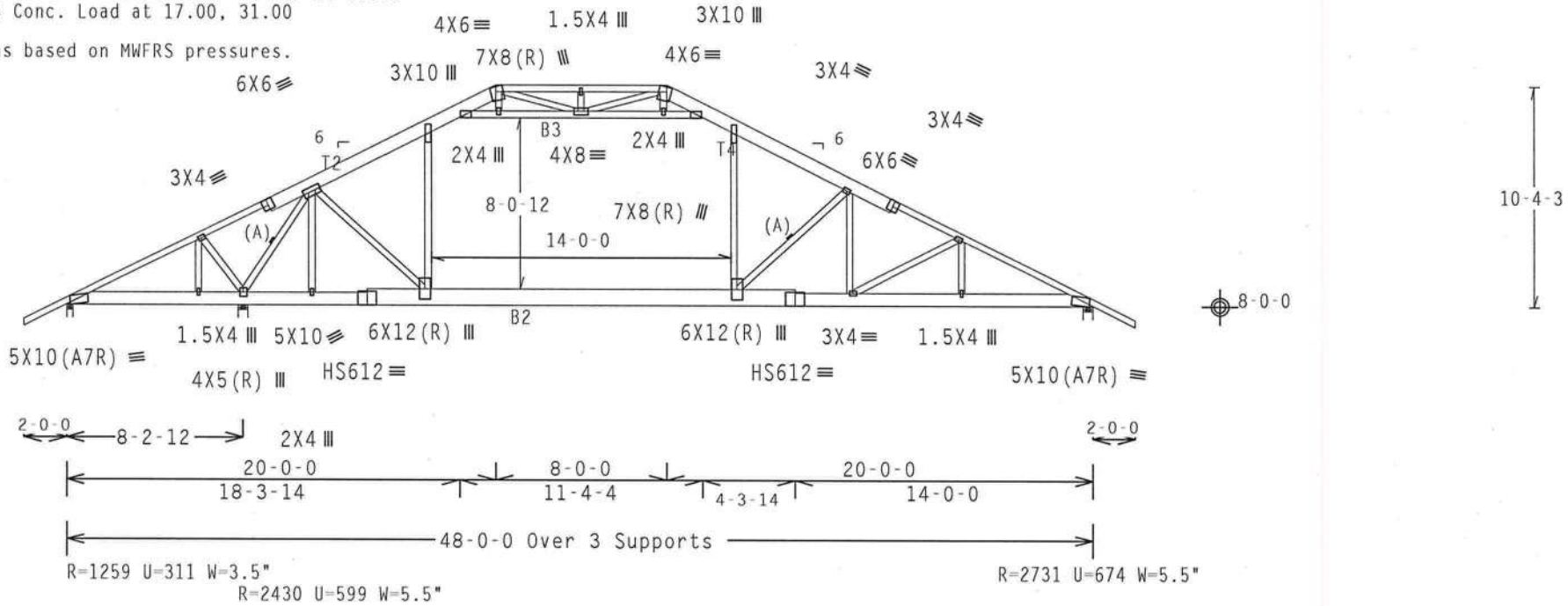

Design Crit: TPI-2002(STD)/FBC

PLT TYP. 20 Gauge HS,Wave Cq/RT=1.00(1.25)/10(0) 7.24.1230 QTY:4 FL/-/4/-/-/R/- Scale =.125"/Ft.

ALPINE
ITW Building Components Group, Inc.
Haines City, FL 33844
FL Certificate of Authorization # 567

WARNING TRUSSES REQUIRE EXTREME CARE IN FABRICATION, HANDLING, SHIPPING, INSTALLING AND BRACING. REFER TO BCSI (BUILDING COMPONENT SAFETY INFORMATION), PUBLISHED BY TPI (TRUSS PLATE INSTITUTE, 218 NORTH LEE STREET, SUITE 312, ALEXANDRIA, VA. 22314) AND WTCA (WOOD TRUSS COUNCIL OF AMERICA. 6300 ENTERPRISE LANE, MADISON, WI 53719) FOR SAFETY PRACTICES PRIOR TO PERFORMING THESE FUNCTIONS. UNLESS OTHERWISE INDICATED TOP CHORD SHALL HAVE PROPERLY ATTACHED STRUCTURAL PANELS AND BOTTOM CHORD SHALL HAVE A PROPERLY ATTACHED RIGID CEILING.

IMPORTANTFURNISH A COPY OF THIS DESIGN TO THE INSTALLATION CONTRACTOR. ITW BCG, INC. SHALL NOT BE RESPONSIBLE FOR ANY DEVIATION FROM THIS DESIGN; ANY FAILURE TO BUILD THE TRUSS IN COMFORMANCE WITH TPI; OR FABRICATING, HANDLING, SHIPPING, INSTALLING & BRACING OF TRUSSES.
DESIGN CONFORMS WITH APPLICABLE PROVISIONS OF NDS (NATIONAL DESIGN SPEC, BY AF&PA) AND TPI. ITW BCG CONNECTOR PLATES ARE MADE OF 20/18/16GA (W,H/SS/K) ASTM A653 GRADE 40/60 (W, K/H,SS) GALV. STEEL. APPLY PLATES TO EACH FACE OF TRUSS AND, UNLESS OTHERWISE LOCATED ON THIS DESIGN, POSITION PER DRAWINGS 160A-Z. ANY INSPECTION OF PLATES FOLLOWED BY (1) SHALL BE PER ANNEX A3 OF TPI1-2002 SEC.3. A SEAL ON THIS DRAWING INDICATES ACCEPTANCE OF PROFESSIONAL ENGINEERING RESPONSIBILITY SOLELY FOR THE TRUSS COMPONENT DESIGN SHOWN. THE SUITABILITY AND USE OF THIS COMPONENT FOR ANY BUILDING IS THE RESPONSIBILITY OF THE BUILDING DESIGNER PER ANSI/TPI 1 SEC. 2.

JAMES F. COLLINS, JR. LICENSE No. 52212 STATE OF FLORIDA PROFESSIONAL ENGINEER
Aug 29 07

TC LL	20.0 PSF	REF	R8228- 75873
TC DL	10.0 PSF	DATE	08/29/07
BC DL	10.0 PSF	DRW	HCUSR8228 07241010
BC LL	0.0 PSF	HC-ENG	TCE/AP
TOT.LD.	40.0 PSF	SEQN-	41531
DUR.FAC.	1.25	FROM	AH
SPACING	SEE ABOVE	JREF-	1TAA8228Z01

Top chord 2x4 SP #2 Dense :T2, T4 2x8 SP SS:
Bot chord 2x8 SP SS :B2 2x10 SP SS:
:B3 2x4 SP #2 Dense:
Webs 2x4 SP #3

SPECIAL LOADS
------(LUMBER DUR.FAC.=1.25 / PLATE DUR.FAC.=1.25)

TC - From	62 PLF at	-2.00 to	62 PLF at	9.40
TC - From	62 PLF at	9.40 to	62 PLF at	17.00
TC - From	85 PLF at	17.00 to	85 PLF at	18.32
TC - From	62 PLF at	18.32 to	62 PLF at	20.00
TC - From	62 PLF at	20.00 to	62 PLF at	28.00
TC - From	62 PLF at	28.00 to	62 PLF at	29.68
TC - From	85 PLF at	29.68 to	85 PLF at	31.00
TC - From	62 PLF at	31.00 to	62 PLF at	38.73
TC - From	62 PLF at	38.73 to	62 PLF at	50.00
PLT- From	20 PLF at	18.83 to	20 PLF at	29.17
BC - From	4 PLF at	-2.00 to	4 PLF at	0.00
BC - From	20 PLF at	0.00 to	20 PLF at	17.00
BC - From	120 PLF at	17.00 to	120 PLF at	31.29
BC - From	20 PLF at	31.29 to	20 PLF at	48.00
BC - From	4 PLF at	48.00 to	4 PLF at	50.00

BC - 138 LB Conc. Load at 17.00, 31.00

Wind reactions based on MWFRS pressures.

(**) 1 plate(s) require special positioning. Refer to scaled plate plot details for special positioning requirements.

110 mph wind, 15.00 ft mean hgt, ASCE 7-02, PART._ENC. bldg, Located anywhere in roof, CAT II, EXP B, wind TC DL=5.0 psf, wind BC DL=5.0 psf. Iw=1.00 GCpi(+/-)=0.55

Calculated horizontal deflection is 0.22" due to live load and 0.31" due to dead load.

(A) Continuous lateral bracing equally spaced on member.

Collar-tie braced with continuous lateral bracing at 24" OC. or rigid ceiling.

Deflection meets L/360 live and L/240 total load. Creep increase factor for dead load is 1.50.

Calculated vertical deflection is 0.47" due to live load and 0.89" due to dead load at X = 16-8-8.

WARNING: Furnish a copy of this DWG to the installation contractor. Special care must be taken during handling, shipping and installation of trusses. See "WARNING" note below.

(1) 2x10X18-0-0 SP SS Bottom chord scab centered 25-5-8 from left end. Attach to one face of chord with (5) rows of 12d_Box_or_Gun_(0.128"x3.25",_min.)_nails @ 6" O.C., staggered 3".

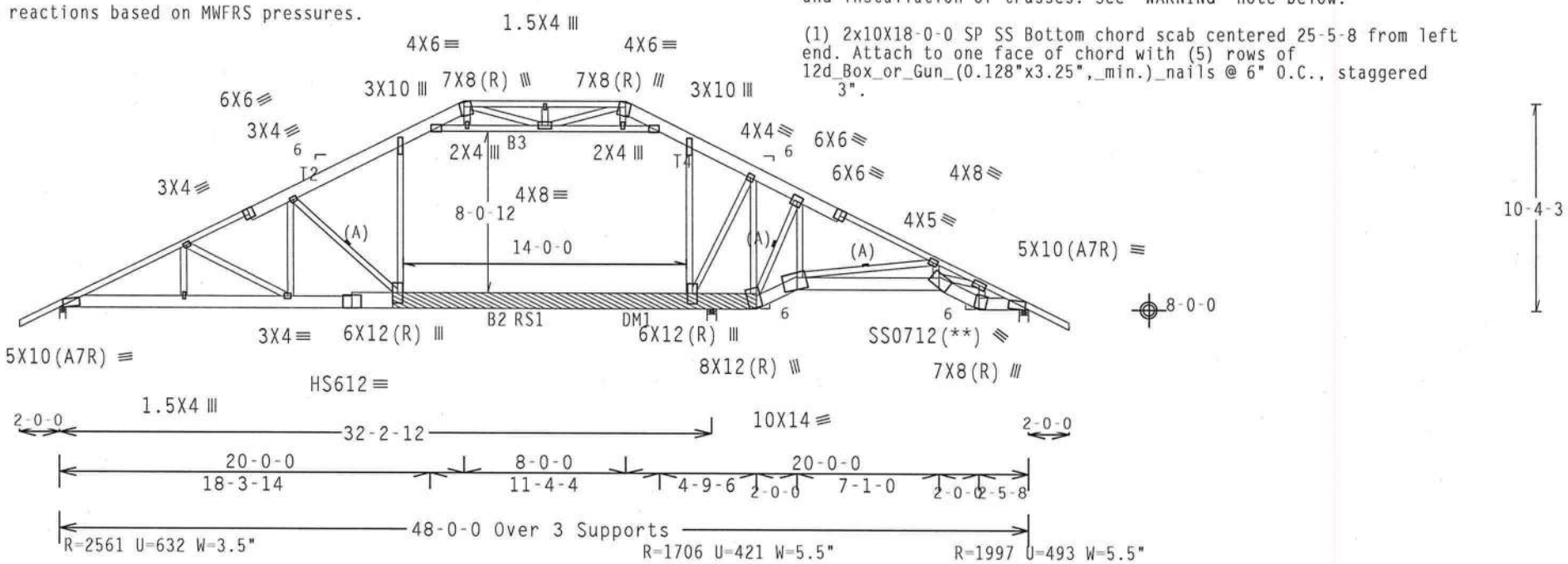

PLT TYP. 20 Gauge HS,18 Gauge HS, Wave

Design Crit: TPI-2002(STD)/FBC
Cq/RT=1.00(1.25)/10(0) 7.24.1230.17 QTY:3 FL/-/4/-/-/R/- Scale =.125"/Ft.

ALPINE
ITW Building Components Group, Inc.
Haines City, FL 33844
FL Certificate of Authorization #567

WARNING TRUSSES REQUIRE EXTREME CARE IN FABRICATION, HANDLING, SHIPPING, INSTALLING AND BRACING. REFER TO BCSI (BUILDING COMPONENT SAFETY INFORMATION), PUBLISHED BY TPI (TRUSS PLATE INSTITUTE, 218 NORTH LEE STREET, SUITE 312, ALEXANDRIA, VA, 22314) AND WTCA (WOOD TRUSS COUNCIL OF AMERICA, 6300 ENTERPRISE LANE, MADISON, WI 53719) FOR SAFETY PRACTICES PRIOR TO PERFORMING THESE FUNCTIONS. UNLESS OTHERWISE INDICATED TOP CHORD SHALL HAVE PROPERLY ATTACHED STRUCTURAL PANELS AND BOTTOM CHORD SHALL HAVE A PROPERLY ATTACHED RIGID CEILING.

IMPORTANTFURNISH A COPY OF THIS DESIGN TO THE INSTALLATION CONTRACTOR. ITW BCG, INC. SHALL NOT BE RESPONSIBLE FOR ANY DEVIATION FROM THIS DESIGN; ANY FAILURE TO BUILD THE TRUSS IN COMFORMANCE WITH TPI; OR FABRICATING, HANDLING, SHIPPING, INSTALLING & BRACING OF TRUSSES. DESIGN CONFORMS WITH APPLICABLE PROVISIONS OF NDS (NATIONAL DESIGN SPEC. BY AF&PA) AND TPI. ITW BCG CONNECTOR PLATES ARE MADE OF 20/18/16GA (W,H/SS/K) ASTM A653 GRADE 40/60 (W, K/H,SS) GALV. STEEL. APPLY PLATES TO EACH FACE OF TRUSS AND, UNLESS OTHERWISE LOCATED ON THIS DESIGN, POSITION PER DRAWINGS 160A-Z. ANY INSPECTION OF PLATES FOLLOWED BY (1) SHALL BE PER ANNEX A3 OF TPI1-2002 SEC.3. A SEAL ON THIS DRAWING INDICATES ACCEPTANCE OF PROFESSIONAL ENGINEERING RESPONSIBILITY SOLELY FOR THE TRUSS COMPONENT DESIGN SHOWN. THE SUITABILITY AND USE OF THIS COMPONENT FOR ANY BUILDING IS THE RESPONSIBILITY OF THE BUILDING DESIGNER PER ANSI/TPI 1 SEC. 2.

JAMES F. COLLINS JR. LICENSE No. 52212 STATE OF FLORIDA PROFESSIONAL ENGINEER

Aug

TC LL	20.0 PSF	REF	R8228- 75874
TC DL	10.0 PSF	DATE	08/29/07
BC DL	10.0 PSF	DRW	HCUSR8228 07241009
BC LL	0.0 PSF	HC-ENG	TCE/AP
TOT.LD.	40.0 PSF	SEQN-	41548
DUR.FAC.	1.25	FROM	AH
SPACING	SEE ABOVE	JREF-	1TAA8228Z01

(7-256--OWNER BUILDER Lee Blatter -- 965-7931 , ** - A3)

Top chord 2x4 SP #2 Dense :T2, T4 2x8 SP SS:
Bot chord 2x8 SP SS :B2 2x10 SP SS:
:B3 2x4 SP #2 Dense:
Webs 2x4 SP #3 :W20 2x4 SP #2 Dense:

Calculated horizontal deflection is 0.13" due to live load and 0.17" due to dead load.

Collar-tie braced with continuous lateral bracing at 24" OC. or rigid ceiling.

Deflection meets L/360 live and L/240 total load. Creep increase factor for dead load is 1.50.

WARNING: Furnish a copy of this DWG to the installation contractor. Special care must be taken during handling, shipping and installation of trusses. See "WARNING" note below.

(**) 1 plate(s) require special positioning. Refer to scaled plate plot details for special positioning requirements.

110 mph wind, 15.00 ft mean hgt, ASCE 7-02, PART. ENC. bldg, Located anywhere in roof, CAT II, EXP B, wind TC DL=5.0 psf, wind BC DL=5.0 psf.

(A) Continuous lateral bracing equally spaced on member.

BC attic room floor loading: LL = 40.00 psf; DL = 10.00 psf; from 17-0-0 to 31-0-0.

Calculated vertical deflection is 0.46" due to live load and 0.92" due to dead load at X = 31-1-12.

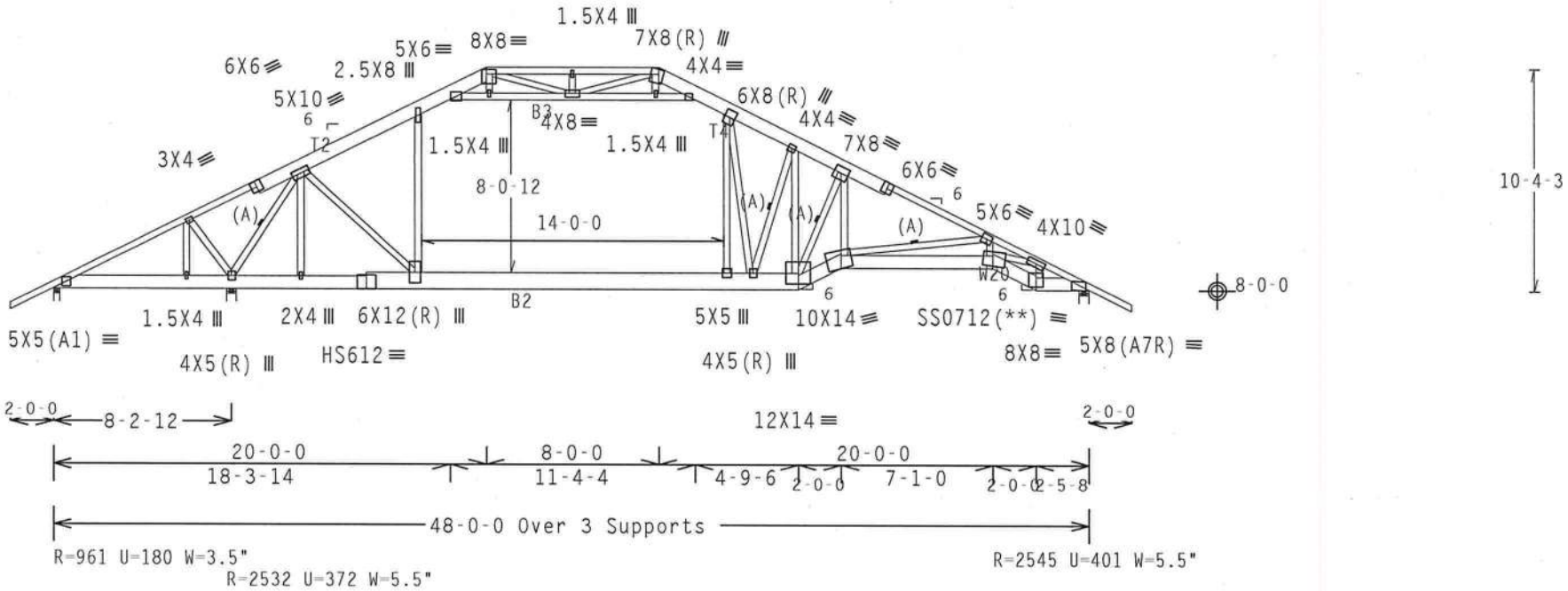

PLT TYP. 20 Gauge HS,18 Gauge HS, Wave Design Crit: TPI-2002(STD)/FBC
Cq/RT=1.00(1.25)/10(0) 7.25.0411.16 QTY:4 FL/-/4/-/-/R/- Scale =.125"/Ft.

ALPINE
ITW Building Components Group, Inc.
Haines City, FL 33844
FL Certificate of Authorization # 567

WARNING TRUSSES REQUIRE EXTREME CARE IN FABRICATION, HANDLING, SHIPPING, INSTALLING AND BRACING. REFER TO BCSI (BUILDING COMPONENT SAFETY INFORMATION), PUBLISHED BY TPI (TRUSS PLATE INSTITUTE, 218 NORTH LEE STREET, SUITE 312, ALEXANDRIA, VA, 22314) AND WTCA (WOOD TRUSS COUNCIL OF AMERICA, 6300 ENTERPRISE LANE, MADISON, WI 53719) FOR SAFETY PRACTICES PRIOR TO PERFORMING THESE FUNCTIONS. UNLESS OTHERWISE INDICATED TOP CHORD SHALL HAVE PROPERLY ATTACHED STRUCTURAL PANELS AND BOTTOM CHORD SHALL HAVE A PROPERLY ATTACHED RIGID CEILING.

IMPORTANTFURNISH A COPY OF THIS DESIGN TO THE INSTALLATION CONTRACTOR. ITW BCG, INC. SHALL NOT BE RESPONSIBLE FOR ANY DEVIATION FROM THIS DESIGN; ANY FAILURE TO BUILD THE TRUSS IN COMFORMANCE WITH TPI; OR FABRICATING, HANDLING, SHIPPING, INSTALLING & BRACING OF TRUSSES.
DESIGN CONFORMS WITH APPLICABLE PROVISIONS OF NDS (NATIONAL DESIGN SPEC. BY AF&PA) AND TPI. ITW BCG CONNECTOR PLATES ARE MADE OF 20/18/16GA (W.H/SS/K) ASTM A653 GRADE 40/60 (W. K/H.SS) GALV. STEEL. APPLY PLATES TO EACH FACE OF TRUSS AND, UNLESS OTHERWISE LOCATED ON THIS DESIGN, POSITION PER DRAWINGS 160A-2. ANY INSPECTION OF PLATES FOLLOWED BY (1) SHALL BE PER ANNEX A3 OF TPI1-2002 SEC.3. A SEAL ON THIS DRAWING INDICATES ACCEPTANCE OF PROFESSIONAL ENGINEERING RESPONSIBILITY SOLELY FOR THE TRUSS COMPONENT DESIGN SHOWN. THE SUITABILITY AND USE OF THIS COMPONENT FOR ANY BUILDING IS THE RESPONSIBILITY OF THE BUILDING DESIGNER PER ANSI/TPI 1 SEC. 2.

JAMES F. COLLINS JR. LICENSE No. 52232 STATE OF FLORIDA PROFESSIONAL ENGINEER
Aug 29, 2007

TC LL	20.0 PSF	REF R8228- 75875
TC DL	10.0 PSF	DATE 08/29/07
BC DL	10.0 PSF	DRW HCUSR8228 07241011
BC LL	0.0 PSF	HC-ENG TCE/AP
TOT.LD.	40.0 PSF	SEQN- 100970 REV
DUR.FAC.	1.25	FROM AH
SPACING	24.0"	JREF- 1TAA8228Z01

Top chord 2x4 SP #2 Dense :T2, T4 2x8 SP SS:
Bot chord 2x8 SP SS :B5 2x10 SP SS:
:B6 2x4 SP #2 Dense:
Webs 2x4 SP #3 :W2, W5 2x4 SP #2 Dense:

(**) 2 plate(s) require special positioning. Refer to scaled plate plot details for special positioning requirements.

110 mph wind, 15.00 ft mean hgt, ASCE 7-02, CLOSED bldg, not located within 6.21 ft from roof edge, CAT II, EXP B, wind TC DL=5.0 psf, wind BC DL=5.0 psf. Iw=1.00 GCpi(+/-)=0.18

In lieu of structural panels use purlins to brace TC and BC @ 24" OC.

Trusses to be spaced at 34.3" OC maximum.

BC attic room floor loading: LL = 40.00 psf; DL = 10.00 psf; from 17-0-0 to 31-0-0.

2 COMPLETE TRUSSES REQUIRED

Nailing Schedule: (12d_Box_or_Gun_(0.128"x3.25"._min.)_nails)
Top Chord: 1 Row @12.00" o.c.
Bot Chord: 1 Row @12.00" o.c.
Webs : 1 Row @ 4" o.c.
Use equal spacing between rows and stagger nails in each row to avoid splitting.

Wind reactions based on MWFRS pressures.

Calculated horizontal deflection is 0.11" due to live load and 0.21" due to dead load.

Collar-tie braced with continuous lateral bracing at 24" OC.

Deflection meets L/360 live and L/240 total load. Creep increase factor for dead load is 1.50.

WARNING: Furnish a copy of this DWG to the installation contractor. Special care must be taken during handling, shipping and installation of trusses. See "WARNING" note below.

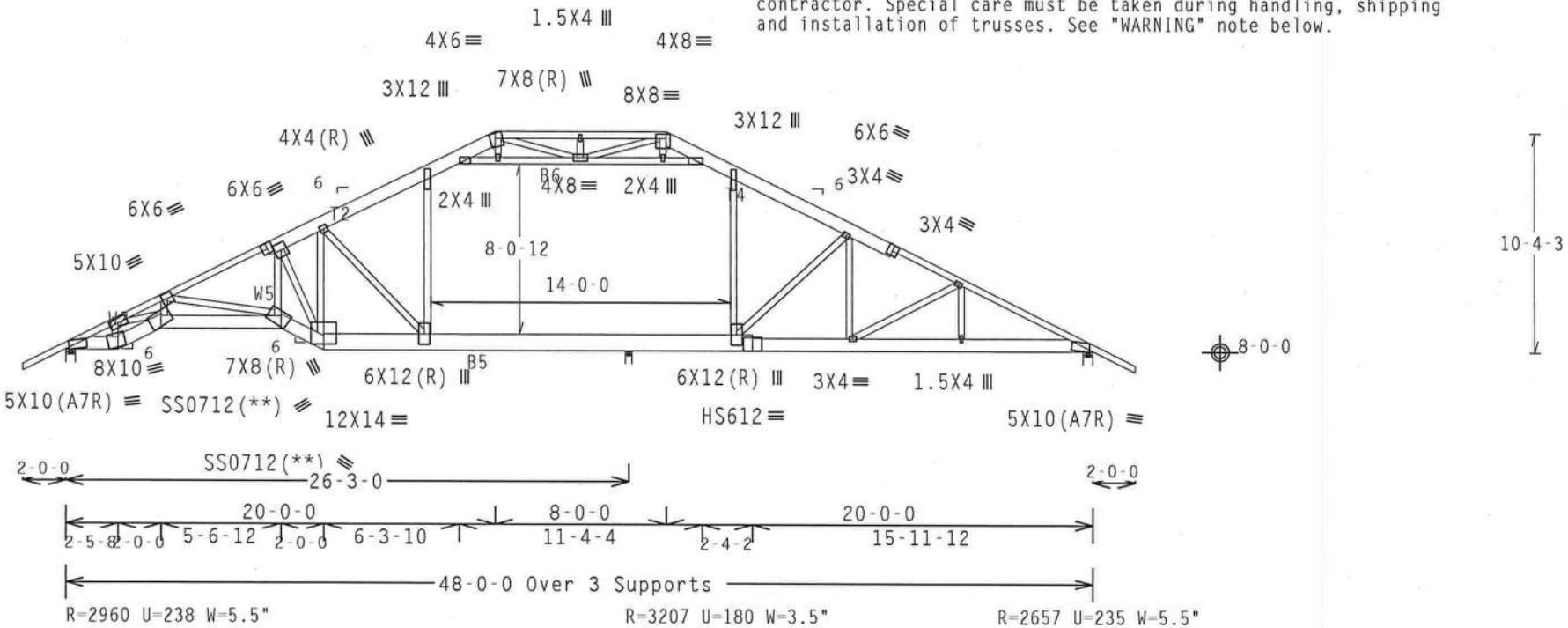

PLT TYP. 20 Gauge HS,18 Gauge HS, Wave Design Crit: TPI-2002(STD)/FBC
Cq/RT=1.00(1.25)/10(0) 7.24.1230 QTY:2 FL/-/4/-/-/R/- Scale =.125"/Ft.

ALPINE
ITW Building Components Group, Inc.
Haines City, FL 33844
FL Certificate of Authorization

WARNING TRUSSES REQUIRE EXTREME CARE IN FABRICATION, HANDLING, SHIPPING, INSTALLING AND BRACING. REFER TO BCSI (BUILDING COMPONENT SAFETY INFORMATION), PUBLISHED BY TPI (TRUSS PLATE INSTITUTE, 218 NORTH LEE STREET, SUITE 312, ALEXANDRIA, VA, 22314) AND WTCA (WOOD TRUSS COUNCIL OF AMERICA, 6300 ENTERPRISE LANE, MADISON, WI 53719) FOR SAFETY PRACTICES PRIOR TO PERFORMING THESE FUNCTIONS. UNLESS OTHERWISE INDICATED TOP CHORD SHALL HAVE PROPERLY ATTACHED STRUCTURAL PANELS AND BOTTOM CHORD SHALL HAVE A PROPERLY ATTACHED RIGID CEILING.

IMPORTANTFURNISH A COPY OF THIS DESIGN TO THE INSTALLATION CONTRACTOR. ITW BCG, INC. SHALL NOT BE RESPONSIBLE FOR ANY DEVIATION FROM THIS DESIGN; ANY FAILURE TO BUILD THE TRUSS IN CONFORMANCE WITH TPI; OR FABRICATING, HANDLING, SHIPPING, INSTALLING & BRACING OF TRUSSES.
DESIGN CONFORMS WITH APPLICABLE PROVISIONS OF NDS (NATIONAL DESIGN SPEC. BY AF&PA) AND TPI. ITW BCG CONNECTOR PLATES ARE MADE OF 20/18/16GA (W.H/SS/K) ASTM A653 GRADE 40/60 (W. K/H.SS) GALV. STEEL. APPLY PLATES TO EACH FACE OF TRUSS AND, UNLESS OTHERWISE LOCATED ON THIS DESIGN, POSITION PER DRAWINGS 160A-Z. ANY INSPECTION OF PLATES FOLLOWED BY (1) SHALL BE PER ANNEX A3 OF TPI1-2002 SEC.3. A SEAL ON THIS DRAWING INDICATES ACCEPTANCE OF PROFESSIONAL ENGINEERING RESPONSIBILITY SOLELY FOR THE TRUSS COMPONENT DESIGN SHOWN. THE SUITABILITY AND USE OF THIS COMPONENT FOR ANY BUILDING IS THE RESPONSIBILITY OF THE BUILDING DESIGNER PER ANSI/TPI 1 SEC. 2.

JAMES F. COLLINS JR. LICENSE No. 52242 STATE OF FLORIDA PROFESSIONAL ENGINEER
Aug 29 07

TC LL	20.0 PSF	REF R8228- 75876
TC DL	10.0 PSF	DATE 08/29/07
BC DL	10.0 PSF	DRW HCUSR8228 07241013
BC LL	0.0 PSF	HC-ENG TCE/AP
TOT.LD.	40.0 PSF	SEQN- 41655
DUR.FAC.	1.25	FROM AH
SPACING	34.3"	JREF- 1TAA8228Z01

Top chord 2x4 SP #2 Dense :T2, T4 2x8 SP SS:
Bot chord 2x8 SP SS :B5, B6 2x10 SP SS:
:B7 2x4 SP #2 Dense:
Webs 2x4 SP #3 :W2, W5 2x4 SP #2 Dense:

Calculated horizontal deflection is 0.19" due to live load and 0.36" due to dead load.

Collar-tie braced with continuous lateral bracing at 24" OC. or rigid ceiling.

Deflection meets L/360 live and L/240 total load. Creep increase factor for dead load is 1.50.

WARNING: Furnish a copy of this DWG to the installation contractor. Special care must be taken during handling, shipping and installation of trusses. See "WARNING" note below.

(**) 2 plate(s) require special positioning. Refer to scaled plate plot details for special positioning requirements.

110 mph wind, 15.00 ft mean hgt, ASCE 7-02, PART. ENC. bldg, not located within 6.50 ft from roof edge, CAT II, EXP B, wind TC DL=5.0 psf, wind BC DL=5.0 psf.

(A) Continuous lateral bracing equally spaced on member.

BC attic room floor loading: LL = 40.00 psf; DL = 10.00 psf; from 17-0-0 to 31-0-0.

Calculated vertical deflection is 0.50" due to live load and 0.97" due to dead load at X = 16-8-8.

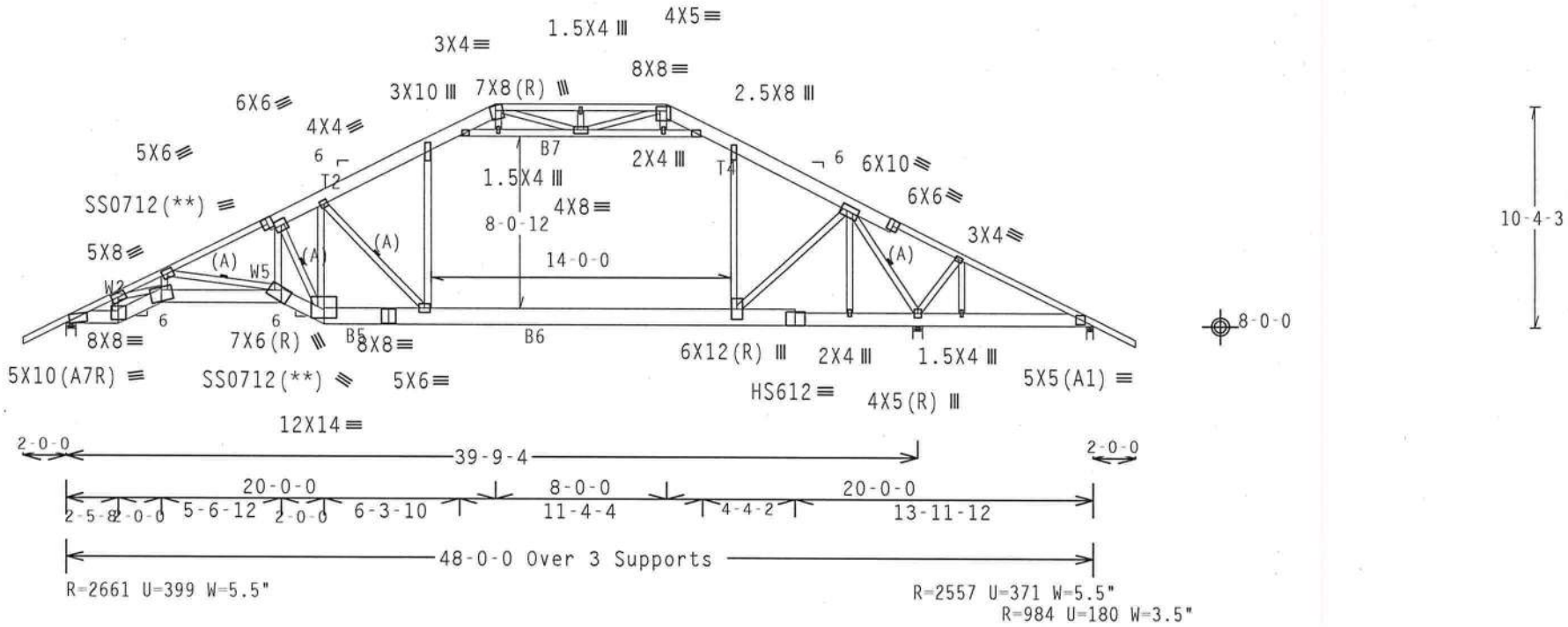

PLT TYP. 20 Gauge HS,18 Gauge HS, Wave Design Crit: TPI-2002(STD)/FBC
Cq/RT=1.00(1.25)/10(0) 7.25.0411 QTY:4 FL/-/4/-/-/R/- Scale =.125"/Ft.

ALPINE
ITW Building Components Group, Inc.
Haines City, FL 33844
FL Certificate of Authorization #567

WARNING TRUSSES REQUIRE EXTREME CARE IN FABRICATION, HANDLING, SHIPPING, INSTALLING AND BRACING. REFER TO BCSI (BUILDING COMPONENT SAFETY INFORMATION), PUBLISHED BY TPI (TRUSS PLATE INSTITUTE, 218 NORTH LEE STREET, SUITE 312, ALEXANDRIA, VA, 22314) AND WTCA (WOOD TRUSS COUNCIL OF AMERICA, 6300 ENTERPRISE LANE, MADISON, WI 53719) FOR SAFETY PRACTICES PRIOR TO PERFORMING THESE FUNCTIONS. UNLESS OTHERWISE INDICATED TOP CHORD SHALL HAVE PROPERLY ATTACHED STRUCTURAL PANELS AND BOTTOM CHORD SHALL HAVE A PROPERLY ATTACHED RIGID CEILING.

IMPORTANTFURNISH A COPY OF THIS DESIGN TO THE INSTALLATION CONTRACTOR. ITW BCG, INC. SHALL NOT BE RESPONSIBLE FOR ANY DEVIATION FROM THIS DESIGN; ANY FAILURE TO BUILD THE TRUSS IN COMFORMANCE WITH TPI; OR FABRICATING, HANDLING, SHIPPING, INSTALLING & BRACING OF TRUSSES.
DESIGN CONFORMS WITH APPLICABLE PROVISIONS OF NDS (NATIONAL DESIGN SPEC. BY AF&PA) AND TPI. ITW BCG CONNECTOR PLATES ARE MADE OF 20/18/16GA (W.H/SS/K) ASTM A653 GRADE 40/60 (W. K/H.SS) GALV. STEEL. APPLY PLATES TO EACH FACE OF TRUSS AND, UNLESS OTHERWISE LOCATED ON THIS DESIGN, POSITION PER DRAWINGS 160A-Z. ANY INSPECTION OF PLATES FOLLOWED BY (1) SHALL BE PER ANNEX A3 OF TPI1-2002 SEC.3. A SEAL ON THIS DRAWING INDICATES ACCEPTANCE OF PROFESSIONAL ENGINEERING RESPONSIBILITY SOLELY FOR THE TRUSS COMPONENT DESIGN SHOWN. THE SUITABILITY AND USE OF THIS COMPONENT FOR ANY BUILDING IS THE RESPONSIBILITY OF THE BUILDING DESIGNER PER ANSI/TPI 1 SEC. 2.

JAMES F. COLLINS, P.E. LICENSE No. 52212 STATE OF FLORIDA PROFESSIONAL ENGINEER
Aug 29,2007

TC LL	20.0 PSF	REF R8228- 75877
TC DL	10.0 PSF	DATE 08/29/07
BC DL	10.0 PSF	DRW HCUSR8228 07241014
BC LL	0.0 PSF	HC-ENG TCE/AP
TOT.LD.	40.0 PSF	SEQN- 100948 REV
DUR.FAC.	1.25	FROM AH
SPACING	24.0"	JREF- 1TAA8228Z01

(7-256--OWNER BUILDER Lee Blatter -- 965-7931 , ** - A8-GDR)

THIS DWG PREPARED FROM COMPUTER INPUT (LOADS & DIMENSIONS) SUBMITTED BY TRUSS MFR.

Top chord 2x4 SP #2 Dense :T2, T4 2x8 SP SS:
Bot chord 2x8 SP SS :B5, B6 2x10 SP SS:
:B7 2x4 SP #2 Dense:
Webs 2x4 SP #3 :W2, W5 2x4 SP #2 Dense:

SPECIAL LOADS
------(LUMBER DUR.FAC.=1.25 / PLATE DUR.FAC.=1.25)

TC - From	92 PLF	at -2.00 to	92 PLF	at 9.40	
TC - From	92 PLF	at 9.40 to	92 PLF	at 17.00	
TC - From	124 PLF	at 17.00 to	124 PLF	at 18.32	
TC - From	92 PLF	at 18.32 to	92 PLF	at 20.00	
TC - From	92 PLF	at 20.00 to	92 PLF	at 28.00	
TC - From	92 PLF	at 28.00 to	92 PLF	at 29.68	
TC - From	124 PLF	at 29.68 to	124 PLF	at 31.00	
TC - From	92 PLF	at 31.00 to	92 PLF	at 36.25	
TC - From	395 PLF	at 36.25 to	412 PLF	at 38.73	
TC - From	412 PLF	at 38.73 to	477 PLF	at 48.00	
TC - From	92 PLF	at 48.00 to	92 PLF	at 50.00	
PLT- From	29 PLF	at 18.83 to	29 PLF	at 29.17	
BC - From	7 PLF	at -2.00 to	7 PLF	at 0.00	
BC - From	29 PLF	at 0.00 to	29 PLF	at 17.00	
BC - From	176 PLF	at 17.00 to	176 PLF	at 31.00	
BC - From	29 PLF	at 31.00 to	29 PLF	at 48.00	
BC - From	7 PLF	at 48.00 to	7 PLF	at 50.00	

TC - 165 LB Conc. Load at 48.00
BC - 217 LB Conc. Load at 17.00, 31.00

Calculated vertical deflection is 0.37" due to live load and 0.71" due to dead load at X = 16-8-8.

2 COMPLETE TRUSSES REQUIRED

Nailing Schedule: (12d_Box_or_Gun_(0.128"x3.25"._min.)_nails)
Top Chord: 1 Row @ 6.25" o.c.
Bot Chord: 1 Row @12.00" o.c.
Webs : 1 Row @ 4" o.c.
Use equal spacing between rows and stagger nails in each row to avoid splitting.

(**) 2 plate(s) require special positioning. Refer to scaled plate plot details for special positioning requirements.

110 mph wind, 15.00 ft mean hgt, ASCE 7-02, PART._ENC. bldg, not located within 6.38 ft from roof edge, CAT II, EXP B, wind TC DL=5.0 psf, wind BC DL=5.0 psf. Iw=1.00 GCpi(+/-)=0.55

Wind reactions based on MWFRS pressures.

Calculated horizontal deflection is 0.14" due to live load and 0.26" due to dead load.

In lieu of structural panels use purlins to brace TC and BC @ 24" OC.

Trusses to be spaced at 35.3" OC maximum.

Collar-tie braced with continuous lateral bracing at 24" OC.

Deflection meets L/360 live and L/240 total load. Creep increase factor for dead load is 1.50.

WARNING: Furnish a copy of this DWG to the installation contractor. Special care must be taken during handling, shipping and installation of trusses. See "WARNING" note below.

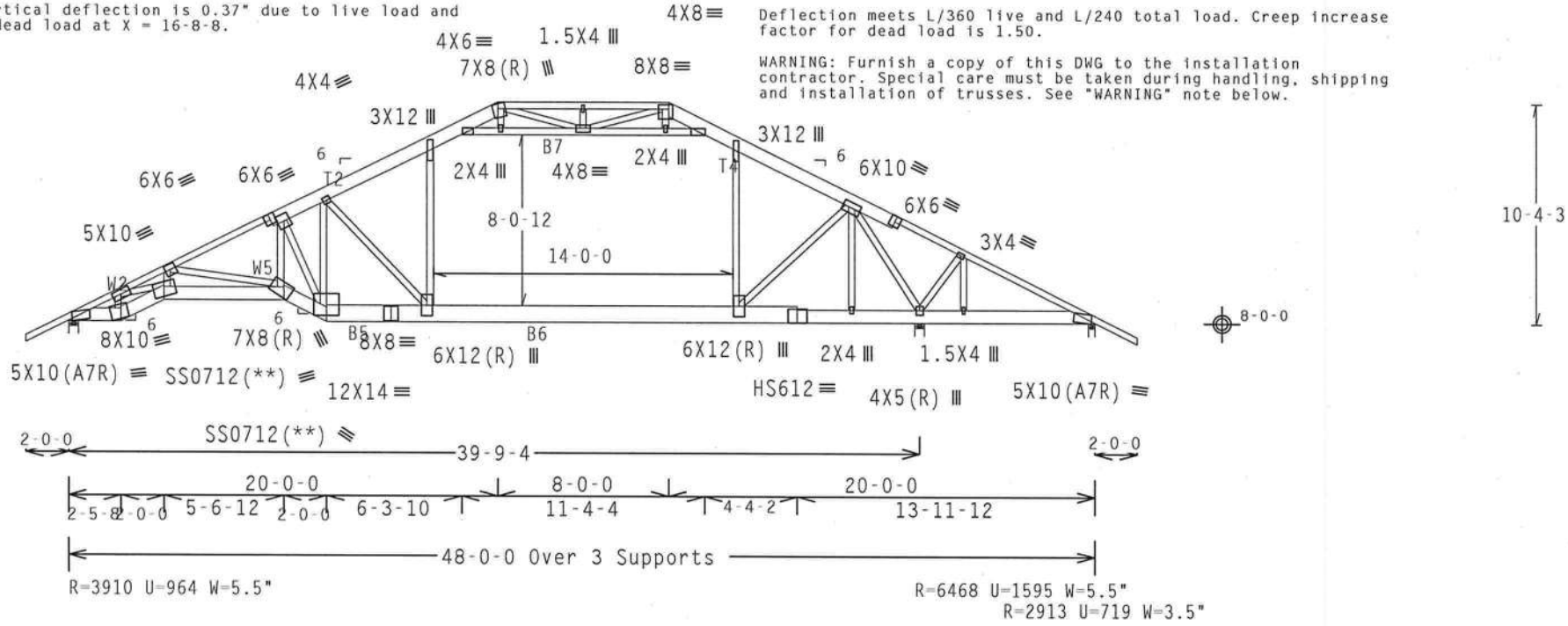

PLT TYP. 20 Gauge HS,18 Gauge HS, Wave Design Crit: TPI-2002(STD)/FBC
Cq/RT=1.00(1.25)/10(0) 7.24.1230.17 QTY:2 FL/-/4/-/-/R/- Scale =.125"/Ft.

ALPINE
ITW Building Components Group, Inc.
Haines City, FL 33844
FL Certificate of Authorization #-567

WARNING TRUSSES REQUIRE EXTREME CARE IN FABRICATION, HANDLING, SHIPPING, INSTALLING AND BRACING. REFER TO BCSI (BUILDING COMPONENT SAFETY INFORMATION), PUBLISHED BY TPI (TRUSS PLATE INSTITUTE, 218 NORTH LEE STREET, SUITE 312, ALEXANDRIA, VA, 22314) AND WTCA (WOOD TRUSS COUNCIL OF AMERICA, 6300 ENTERPRISE LANE, MADISON, WI 53719) FOR SAFETY PRACTICES PRIOR TO PERFORMING THESE FUNCTIONS. UNLESS OTHERWISE INDICATED TOP CHORD SHALL HAVE PROPERLY ATTACHED STRUCTURAL PANELS AND BOTTOM CHORD SHALL HAVE A PROPERLY ATTACHED RIGID CEILING.

IMPORTANTFURNISH A COPY OF THIS DESIGN TO THE INSTALLATION CONTRACTOR. ITW BCG, INC. SHALL NOT BE RESPONSIBLE FOR ANY DEVIATION FROM THIS DESIGN; ANY FAILURE TO BUILD THE TRUSS IN COMFORMANCE WITH TPI; OR FABRICATING, HANDLING, SHIPPING, INSTALLING & BRACING OF TRUSSES.
DESIGN CONFORMS WITH APPLICABLE PROVISIONS OF NDS (NATIONAL DESIGN SPEC. BY AF&PA) AND TPI. ITW BCG CONNECTOR PLATES ARE MADE OF 20/18/16GA (W,H/SS/K) ASTM A653 GRADE 40/60 (W, K/H,SS) GALV. STEEL. APPLY PLATES TO EACH FACE OF TRUSS AND, UNLESS OTHERWISE LOCATED ON THIS DESIGN, POSITION PER DRAWINGS 160A-Z. ANY INSPECTION OF PLATES FOLLOWED BY (1) SHALL BE PER ANNEX A3 OF TPI1-2002 SEC.3. A SEAL ON THIS DRAWING INDICATES ACCEPTANCE OF PROFESSIONAL ENGINEERING RESPONSIBILITY SOLELY FOR THE TRUSS COMPONENT DESIGN SHOWN. THE SUITABILITY AND USE OF THIS COMPONENT FOR ANY BUILDING IS THE RESPONSIBILITY OF THE BUILDING DESIGNER PER ANSI/TPI 1 SEC. 2.

JAMES E. COLLINS, JR. LICENSE No. 52212 STATE OF FLORIDA PROFESSIONAL ENGINEER
Aug 2, 2007

TC LL	20.0 PSF	REF R8228- 75878
TC DL	10.0 PSF	DATE 08/29/07
BC DL	10.0 PSF	DRW HCUSR8228 07241015
BC LL	0.0 PSF	HC-ENG TCE/AP
TOT.LD.	40.0 PSF	SEQN- 41673
DUR.FAC.	1.25	FROM AH
SPACING	SEE ABOVE	JREF- 1TAA8228Z01

Top chord 2x4 SP #2 Dense
Bot chord 2x4 SP #2 Dense
Webs 2x4 SP #3

(A) 1x4 SP #3 or better "L" brace. 80% length of web member. Attach with 8d Box or Gun (0.113"x2.5",min.)nails @ 6" OC.

Deflection meets L/360 live and L/240 total load. Creep increase factor for dead load is 1.50.

See DWGS A11015EE0207 & GBLLETIN0207 for more requirements.

Gable end supports 8" max rake overhang.

(**) 2 plate(s) require special positioning. Refer to scaled plate plot details for special positioning requirements.

110 mph wind, 15.00 ft mean hgt, ASCE 7-02, CLOSED bldg, Located anywhere in roof, CAT II, EXP B, wind TC DL=5.0 psf, wind BC DL=5.0 psf.

WARNING: Furnish a copy of this DWG to the installation contractor. Special care must be taken during handling, shipping and installation of trusses. See "WARNING" note below.

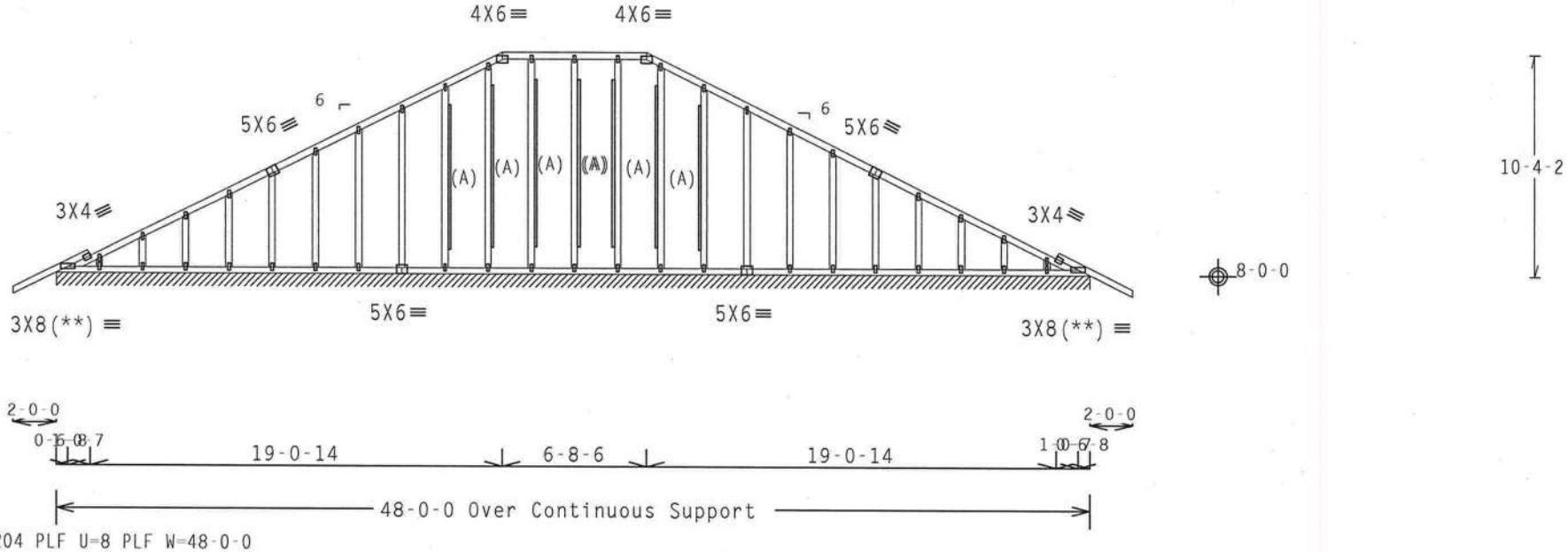

R=204 PLF U=8 PLF W=48-0-0

Note: All Plates Are 1.5X4 Except As Shown.

Design Crit: TPI-2002(STD)/FBC

PLT TYP. Wave

Cq/RT=1.00(1.25)/10(0) 7.25.0411.16 QTY:2 FL/-/4/-/-/R/- Scale =.125"/Ft.

ALPINE

ITW Building Components Group, Inc.
Haines City, FL 33844
FL Certificate of Authorization #

WARNING TRUSSES REQUIRE EXTREME CARE IN FABRICATION, HANDLING, SHIPPING, INSTALLING AND BRACING. REFER TO BCSI (BUILDING COMPONENT SAFETY INFORMATION), PUBLISHED BY TPI (TRUSS PLATE INSTITUTE, 218 NORTH LEE STREET, SUITE 312, ALEXANDRIA, VA. 22314) AND WTCA (WOOD TRUSS COUNCIL OF AMERICA, 6300 ENTERPRISE LANE, MADISON, WI 53719) FOR SAFETY PRACTICES PRIOR TO PERFORMING THESE FUNCTIONS. UNLESS OTHERWISE INDICATED TOP CHORD SHALL HAVE PROPERLY ATTACHED STRUCTURAL PANELS AND BOTTOM CHORD SHALL HAVE A PROPERLY ATTACHED RIGID CEILING.

IMPORTANTFURNISH A COPY OF THIS DESIGN TO THE INSTALLATION CONTRACTOR. ITW BCG, INC. SHALL NOT BE RESPONSIBLE FOR ANY DEVIATION FROM THIS DESIGN; ANY FAILURE TO BUILD THE TRUSS IN COMFORMANCE WITH TPI; OR FABRICATING, HANDLING, SHIPPING, INSTALLING & BRACING OF TRUSSES. DESIGN CONFORMS WITH APPLICABLE PROVISIONS OF NDS (NATIONAL DESIGN SPEC. BY AF&PA) AND TPI. ITW BCG CONNECTOR PLATES ARE MADE OF 20/18/16GA (W,H/SS/K) ASTM A653 GRADE 40/60 (W, K/H,SS) GALV. STEEL. APPLY PLATES TO EACH FACE OF TRUSS AND, UNLESS OTHERWISE LOCATED ON THIS DESIGN, POSITION PER DRAWINGS 160A-Z. ANY INSPECTION OF PLATES FOLLOWED BY (I) SHALL BE PER ANNEX A3 OF TPI1-2002 SEC.3. A SEAL ON THIS DRAWING INDICATES ACCEPTANCE OF PROFESSIONAL ENGINEERING RESPONSIBILITY SOLELY FOR THE TRUSS COMPONENT DESIGN SHOWN. THE SUITABILITY AND USE OF THIS COMPONENT FOR ANY BUILDING IS THE RESPONSIBILITY OF THE BUILDING DESIGNER PER ANSI/TPI 1 SEC. 2.

JAMES F. COLLINS, JR. LICENSED No. 52212 STATE OF FLORIDA PROFESSIONAL ENGINEER

Aug

TC LL	20.0 PSF	REF	R8228- 75879
TC DL	10.0 PSF	DATE	08/29/07
BC DL	10.0 PSF	DRW	HCUSR8228 07241016
BC LL	0.0 PSF	HC-ENG	TCE/AP
TOT.LD.	40.0 PSF	SEQN-	100952 REV
DUR.FAC.	1.25	FROM	AH
SPACING	SEE ABOVE	JREF-	1TAA8228Z01

Top chord 2x4 SP #2 Dense :T2, T4 2x8 SP SS:
Bot chord 2x8 SP SS :B5 2x10 SP SS:
:B6 2x4 SP #2 Dense:
Webs 2x4 SP #3 :W2, W5 2x4 SP #2 Dense:

Calculated horizontal deflection is 0.15" due to live load and 0.27" due to dead load.

Collar-tie braced with continuous lateral bracing at 24" OC. or rigid ceiling.

Deflection meets L/360 live and L/240 total load. Creep increase factor for dead load is 1.50.

WARNING: Furnish a copy of this DWG to the installation contractor. Special care must be taken during handling, shipping and installation of trusses. See "WARNING" note below.

(**) 1 plate(s) require special positioning. Refer to scaled plate plot details for special positioning requirements.

110 mph wind, 15.00 ft mean hgt, ASCE 7-02, CLOSED bldg, not located within 6.50 ft from roof edge, CAT II, EXP B, wind TC DL=5.0 psf, wind BC DL=5.0 psf.

(A) Continuous lateral bracing equally spaced on member.

BC attic room floor loading: LL = 40.00 psf; DL = 10.00 psf; from 17-0-0 to 31-0-0.

Calculated vertical deflection is 0.45" due to live load and 0.79" due to dead load at X = 16-8-8.

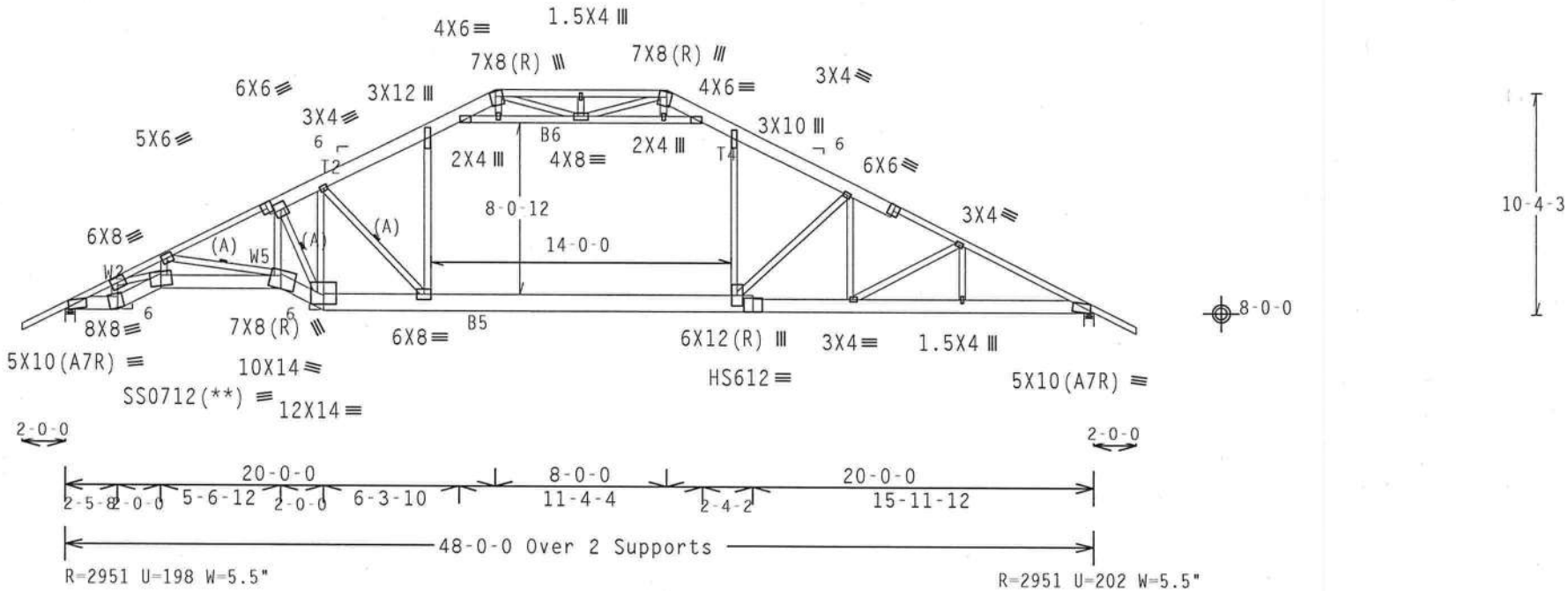

PLT TYP. 20 Gauge HS,18 Gauge HS, Wave Design Crit: TPI-2002(STD)/FBC
Cq/RT=1.00(1.25)/10(0) 7.25.0411 QTY:1 FL/-/4/-/-/R/- Scale =.125"/Ft.

ALPINE
ITW Building Components Group, Inc.
Haines City, FL 33844
FL Certificate of Authorization #567

WARNING TRUSSES REQUIRE EXTREME CARE IN FABRICATION, HANDLING, SHIPPING, INSTALLING AND BRACING. REFER TO BCSI (BUILDING COMPONENT SAFETY INFORMATION), PUBLISHED BY TPI (TRUSS PLATE INSTITUTE, 218 NORTH LEE STREET, SUITE 312, ALEXANDRIA, VA, 22314) AND WTCA (WOOD TRUSS COUNCIL OF AMERICA, 6300 ENTERPRISE LANE, MADISON, WI 53719) FOR SAFETY PRACTICES PRIOR TO PERFORMING THESE FUNCTIONS. UNLESS OTHERWISE INDICATED TOP CHORD SHALL HAVE PROPERLY ATTACHED STRUCTURAL PANELS AND BOTTOM CHORD SHALL HAVE A PROPERLY ATTACHED RIGID CEILING.

IMPORTANTFURNISH A COPY OF THIS DESIGN TO THE INSTALLATION CONTRACTOR. ITW BCG, INC. SHALL NOT BE RESPONSIBLE FOR ANY DEVIATION FROM THIS DESIGN; ANY FAILURE TO BUILD THE TRUSS IN COMFORMANCE WITH TPI; OR FABRICATING, HANDLING, SHIPPING, INSTALLING & BRACING OF TRUSSES.
DESIGN CONFORMS WITH APPLICABLE PROVISIONS OF NDS (NATIONAL DESIGN SPEC. BY AF&PA) AND TPI. ITW BCG CONNECTOR PLATES ARE MADE OF 20/18/16GA (W,H/SS/K) ASTM A653 GRADE 40/60 (W, K/H,SS) GALV. STEEL. APPLY PLATES TO EACH FACE OF TRUSS AND, UNLESS OTHERWISE LOCATED ON THIS DESIGN, POSITION PER DRAWINGS 160A-Z. ANY INSPECTION OF PLATES FOLLOWED BY (1) SHALL BE PER ANNEX A3 OF TPI1-2002 SEC.3. A SEAL ON THIS DRAWING INDICATES ACCEPTANCE OF PROFESSIONAL ENGINEERING RESPONSIBILITY SOLELY FOR THE TRUSS COMPONENT DESIGN SHOWN. THE SUITABILITY AND USE OF THIS COMPONENT FOR ANY BUILDING IS THE RESPONSIBILITY OF THE BUILDING DESIGNER PER ANSI/TPI 1 SEC. 2.

JAMES F. COLLINS JR. LICENSE No. 52212 STATE OF FLORIDA PROFESSIONAL ENGINEER
Aug 29, 2007

TC LL	20.0 PSF	REF	R8228- 75880
TC DL	10.0 PSF	DATE	08/29/07
BC DL	10.0 PSF	DRW	HCUSR8228 07241017
BC LL	0.0 PSF	HC-ENG	TCE/AP
TOT.LD.	40.0 PSF	SEQN-	100959 REV
DUR.FAC.	1.25	FROM	AH
SPACING	24.0"	JREF-	1TAA8228Z01

Top chord 2x4 SP #2 Dense
Bot chord 2x4 SP #2 Dense
Webs 2x4 SP #3

Deflection meets L/360 live and L/240 total load. Creep increase factor for dead load is 1.50.

110 mph wind, 15.00 ft mean hgt, ASCE 7-02, CLOSED bldg, Located anywhere in roof, CAT II, EXP B, wind TC DL=5.0 psf, wind BC DL=5.0 psf. Iw=1.00 GCpi(+/-)=0.18

Wind reactions based on MWFRS pressures.

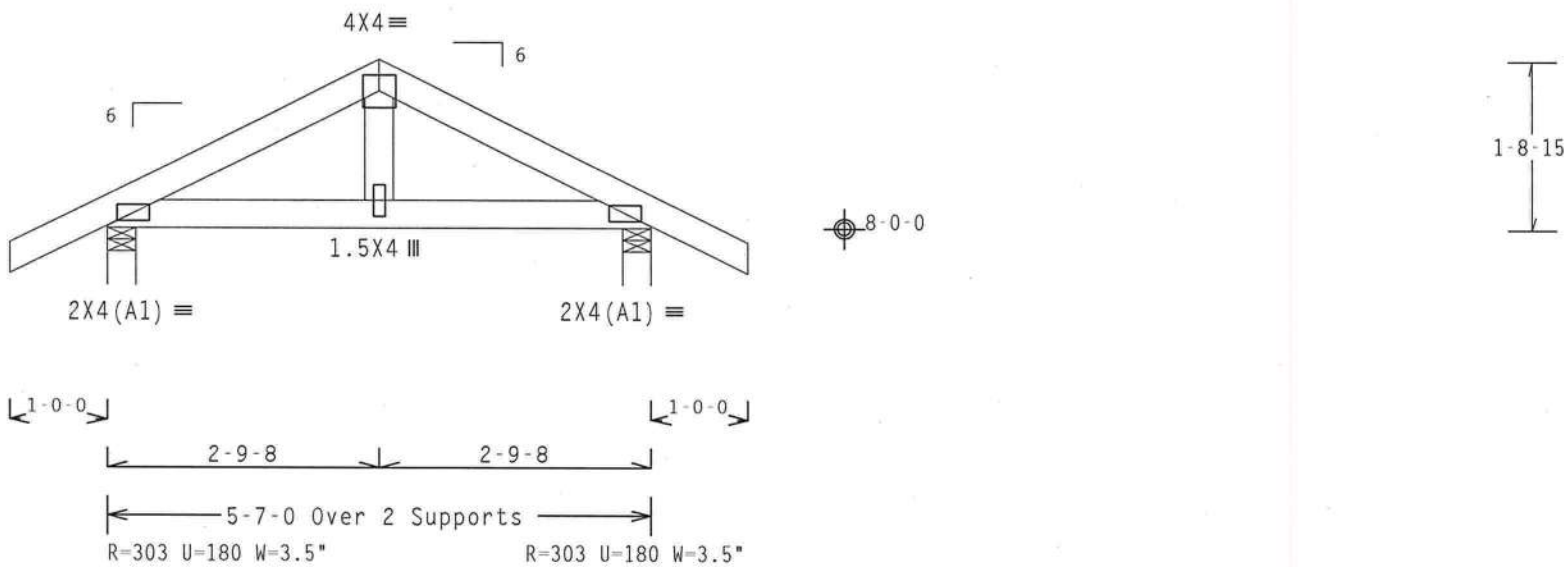

Design Crit: TPI-2002(STD)/FBC
Cq/RT=1.00(1.25)/10(0) 7.24.1230

PLT TYP. Wave | QTY:6 | FL/-/4/-/-/R/- | Scale =.5"/Ft.

ALPINE
ITW Building Components Group, Inc.
Haines City, FL 33844
FL Certificate of Authorization #567

WARNING TRUSSES REQUIRE EXTREME CARE IN FABRICATION, HANDLING, SHIPPING, INSTALLING AND BRACING. REFER TO BCSI (BUILDING COMPONENT SAFETY INFORMATION), PUBLISHED BY TPI (TRUSS PLATE INSTITUTE, 218 NORTH LEE STREET, SUITE 312, ALEXANDRIA, VA. 22314) AND WTCA (WOOD TRUSS COUNCIL OF AMERICA, 6300 ENTERPRISE LANE, MADISON, WI 53719) FOR SAFETY PRACTICES PRIOR TO PERFORMING THESE FUNCTIONS. UNLESS OTHERWISE INDICATED TOP CHORD SHALL HAVE PROPERLY ATTACHED STRUCTURAL PANELS AND BOTTOM CHORD SHALL HAVE A PROPERLY ATTACHED RIGID CEILING.

IMPORTANTFURNISH A COPY OF THIS DESIGN TO THE INSTALLATION CONTRACTOR. ITW BCG, INC. SHALL NOT BE RESPONSIBLE FOR ANY DEVIATION FROM THIS DESIGN; ANY FAILURE TO BUILD THE TRUSS IN COMFORMANCE WITH TPI; OR FABRICATING, HANDLING, SHIPPING, INSTALLING & BRACING OF TRUSSES.
DESIGN CONFORMS WITH APPLICABLE PROVISIONS OF NDS (NATIONAL DESIGN SPEC, BY AF&PA) AND TPI. ITW BCG CONNECTOR PLATES ARE MADE OF 20/18/16GA (W,H/SS/K) ASTM A653 GRADE 40/60 (W, K/H,SS) GALV. STEEL. APPLY PLATES TO EACH FACE OF TRUSS AND, UNLESS OTHERWISE LOCATED ON THIS DESIGN, POSITION PER DRAWINGS 160A-Z. ANY INSPECTION OF PLATES FOLLOWED BY (1) SHALL BE PER ANNEX A3 OF TPI1-2002 SEC.3. A SEAL ON THIS DRAWING INDICATES ACCEPTANCE OF PROFESSIONAL ENGINEERING RESPONSIBILITY SOLELY FOR THE TRUSS COMPONENT DESIGN SHOWN. THE SUITABILITY AND USE OF THIS COMPONENT FOR ANY BUILDING IS THE RESPONSIBILITY OF THE BUILDING DESIGNER PER ANSI/TPI 1 SEC. 2.

JAMES F. COLLINS, JR. LICENSE No. 52212 STATE OF FLORIDA PROFESSIONAL ENGINEER
Aug 29 07

TC LL	20.0 PSF	REF R8228- 75881
TC DL	10.0 PSF	DATE 08/29/07
BC DL	10.0 PSF	DRW HCUSR8228 07241018
BC LL	0.0 PSF	HC-ENG TCE/AP *
TOT.LD.	40.0 PSF	SEQN- 166840
DUR.FAC.	1.25	FROM AH
SPACING	24.0"	JREF- 1TAA8228Z01

Top chord 2x4 SP #2 Dense
Bot chord 2x4 SP #2 Dense
Webs 2x4 SP #3

Truss spaced at 24.0" OC designed to support 1-0-0 top chord outlookers. Cladding load shall not exceed 3.00 PSF. Top chord must not be cut or notched.

The Building Designer is responsible for the design of the roof and ceiling diaphragms, gable end shear walls, and supporting shear walls. Shear walls must provide continuous lateral restraint to the gable end. All connections to be designed by the Building Designer.

+ Member to be laterally braced for horizontal wind loads. Bracing system to be designed and furnished by others.

(**) 2 plate(s) require special positioning. Refer to scaled plate plot details for special positioning requirements.

110 mph wind, 15.00 ft mean hgt, ASCE 7-02, CLOSED bldg, Located anywhere in roof, CAT II, EXP B, wind TC DL=5.0 psf, wind BC DL=5.0 psf.

Deflection meets L/360 live and L/240 total load. Creep increase factor for dead load is 1.50.

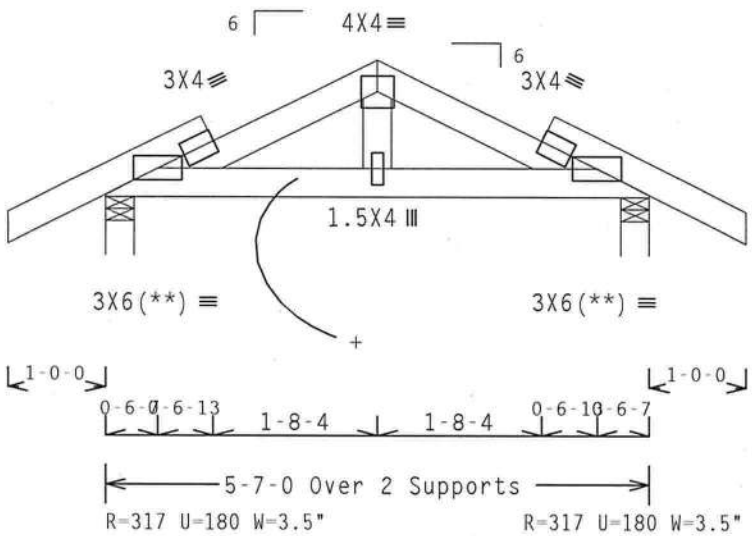

8-0-0

1-5-0

Design Crit: TPI-2002(STD)/FBC
Cq/RT=1.00(1.25)/10(0) 7.25.0411

PLT TYP. Wave QTY:1 FL/-/4/-/-/R/- Scale =.5"/Ft.

ALPINE
ITW Building Components Group, Inc.
Haines City, FL 33844
FL Certificate of Authorization #567

WARNING TRUSSES REQUIRE EXTREME CARE IN FABRICATION, HANDLING, SHIPPING, INSTALLING AND BRACING. REFER TO BCSI (BUILDING COMPONENT SAFETY INFORMATION), PUBLISHED BY TPI (TRUSS PLATE INSTITUTE, 218 NORTH LEE STREET, SUITE 312, ALEXANDRIA, VA, 22314) AND WTCA (WOOD TRUSS COUNCIL OF AMERICA, 6300 ENTERPRISE LANE, MADISON, WI 53719) FOR SAFETY PRACTICES PRIOR TO PERFORMING THESE FUNCTIONS. UNLESS OTHERWISE INDICATED TOP CHORD SHALL HAVE PROPERLY ATTACHED STRUCTURAL PANELS AND BOTTOM CHORD SHALL HAVE A PROPERLY ATTACHED RIGID CEILING.

IMPORTANTFURNISH A COPY OF THIS DESIGN TO THE INSTALLATION CONTRACTOR. ITW BCG, INC. SHALL NOT BE RESPONSIBLE FOR ANY DEVIATION FROM THIS DESIGN; ANY FAILURE TO BUILD THE TRUSS IN CONFORMANCE WITH TPI; OR FABRICATING, HANDLING, SHIPPING, INSTALLING & BRACING OF TRUSSES.
DESIGN CONFORMS WITH APPLICABLE PROVISIONS OF NDS (NATIONAL DESIGN SPEC. BY AF&PA) AND TPI. ITW BCG CONNECTOR PLATES ARE MADE OF 20/18/16GA (W.H/SS/K) ASTM A653 GRADE 40/60 (W, K/H,SS) GALV. STEEL. APPLY PLATES TO EACH FACE OF TRUSS AND, UNLESS OTHERWISE LOCATED ON THIS DESIGN, POSITION PER DRAWINGS 160A-Z. ANY INSPECTION OF PLATES FOLLOWED BY (1) SHALL BE PER ANNEX A3 OF TPI1-2002 SEC.3. A SEAL ON THIS DRAWING INDICATES ACCEPTANCE OF PROFESSIONAL ENGINEERING RESPONSIBILITY SOLELY FOR THE TRUSS COMPONENT DESIGN SHOWN. THE SUITABILITY AND USE OF THIS COMPONENT FOR ANY BUILDING IS THE RESPONSIBILITY OF THE BUILDING DESIGNER PER ANSI/TPI 1 SEC. 2.

JAMES F. COLLINS JR. LICENSE No. 52212 STATE OF FLORIDA PROFESSIONAL ENGINEER
Aug 29 07

TC LL	20.0 PSF	REF	R8228- 75882
TC DL	10.0 PSF	DATE	08/29/07
BC DL	10.0 PSF	DRW	HCUSR8228 07241019
BC LL	0.0 PSF	HC-ENG	TCE/AP
TOT.LD.	40.0 PSF	SEQN-	100963 REV
DUR.FAC.	1.25	FROM	AH
SPACING	SEE ABOVE	JREF-	1TAA8228Z01

Top chord 2x4 SP #2 Dense
Bot chord 2x4 SP #2 Dense
Webs 2x4 SP #3

In lieu of rigid ceiling use purlins to brace BC @ 24" OC.

Deflection meets L/360 live and L/240 total load. Creep increase factor for dead load is 1.50.

Refer to Dwg PIGBACKA0207 or PIGBACKB0207 for piggyback details. Portion of truss under piggyback is to be braced @ 24" oc unless otherwise specified.

110 mph wind, 19.35 ft mean hgt, ASCE 7-02, CLOSED bldg, Located anywhere in roof, CAT II, EXP B, wind TC DL=5.0 psf, wind BC DL=1.2 psf. Iw=1.00 GCpi(+/-)=0.18

Wind reactions based on MWFRS pressures.

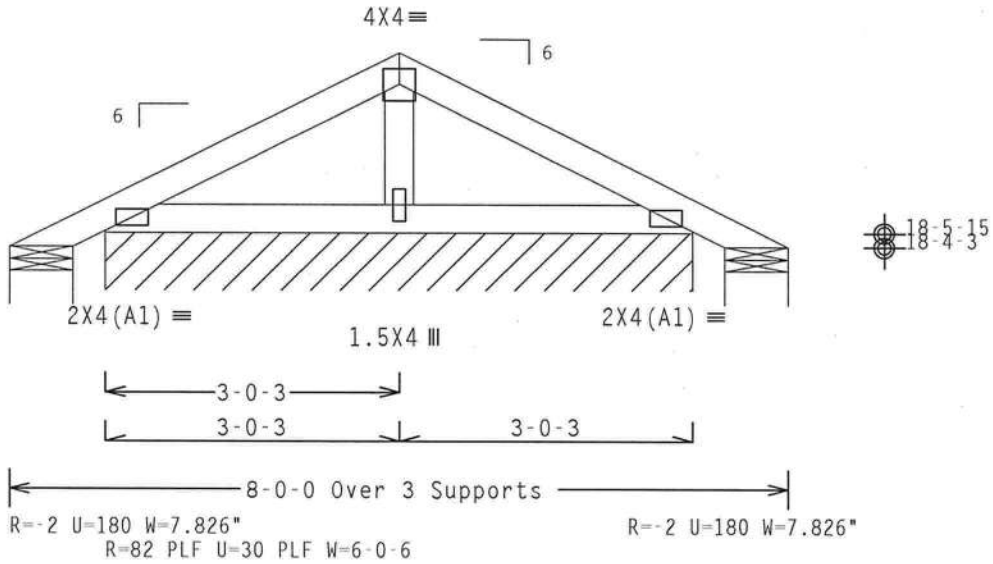

Design Crit: TPI-2002(STD)/FBC
Cq/RT=1.00(1.25)/10(0) 7.24.1230

PLT TYP. Wave

QTY:31 FL/-/4/-/-/R/-

Scale =.5"/Ft.

ALPINE

ITW Building Components Group, Inc.
Haines City, FL 33844
FL Certificate of Authorization #

WARNING TRUSSES REQUIRE EXTREME CARE IN FABRICATION, HANDLING, SHIPPING, INSTALLING AND BRACING. REFER TO BCSI (BUILDING COMPONENT SAFETY INFORMATION), PUBLISHED BY TPI (TRUSS PLATE INSTITUTE, 218 NORTH LEE STREET, SUITE 312, ALEXANDRIA, VA. 22314) AND WTCA (WOOD TRUSS COUNCIL OF AMERICA, 6300 ENTERPRISE LANE, MADISON, WI 53719) FOR SAFETY PRACTICES PRIOR TO PERFORMING THESE FUNCTIONS. UNLESS OTHERWISE INDICATED TOP CHORD SHALL HAVE PROPERLY ATTACHED STRUCTURAL PANELS AND BOTTOM CHORD SHALL HAVE A PROPERLY ATTACHED RIGID CEILING.

IMPORTANTFURNISH A COPY OF THIS DESIGN TO THE INSTALLATION CONTRACTOR. ITW BCG, INC. SHALL NOT BE RESPONSIBLE FOR ANY DEVIATION FROM THIS DESIGN; ANY FAILURE TO BUILD THE TRUSS IN COMFORMANCE WITH TPI; OR FABRICATING, HANDLING, SHIPPING, INSTALLING & BRACING OF TRUSSES.
DESIGN CONFORMS WITH APPLICABLE PROVISIONS OF NDS (NATIONAL DESIGN SPEC. BY AF&PA) AND TPI. ITW BCG CONNECTOR PLATES ARE MADE OF 20/18/16GA (W.H/SS/K) ASTM A653 GRADE 40/60 (W, K/H,SS) GALV. STEEL. APPLY PLATES TO EACH FACE OF TRUSS AND, UNLESS OTHERWISE LOCATED ON THIS DESIGN, POSITION PER DRAWINGS 160A-Z. ANY INSPECTION OF PLATES FOLLOWED BY (1) SHALL BE PER ANNEX A3 OF TPI1-2002 SEC.3. A SEAL ON THIS DRAWING INDICATES ACCEPTANCE OF PROFESSIONAL ENGINEERING RESPONSIBILITY SOLELY FOR THE TRUSS COMPONENT DESIGN SHOWN. THE SUITABILITY AND USE OF THIS COMPONENT FOR ANY BUILDING IS THE RESPONSIBILITY OF THE BUILDING DESIGNER PER ANSI/TPI 1 SEC. 2.

JAMES F. COLLINS, JR. LICENSE No 52212 STATE OF FLORIDA PROFESSIONAL ENGINEER

Aug 29

TC LL	20.0 PSF	REF	R8228- 75883
TC DL	10.0 PSF	DATE	08/29/07
BC DL	2.0 PSF	DRW	HCUSR8228 07241001
BC LL	0.0 PSF	HC-ENG	TCE/AP
TOT.LD.	32.0 PSF	SEQN-	41382
DUR.FAC.	1.25	FROM	AH
SPACING	24.0"	JREF-	1TAA8228Z01

(7-256--OWNER BUILDER Lee Blatter -- 965-7931 , ** - AP2)

Top chord 2x4 SP #2 Dense
Bot chord 2x4 SP #2 Dense
Webs 2x4 SP #3

Deflection meets L/360 live and L/240 total load. Creep increase factor for dead load is 1.50.

110 mph wind, 19.51 ft mean hgt, ASCE 7-02, CLOSED bldg, Located anywhere in roof, CAT II, EXP B, wind TC DL=5.0 psf, wind BC DL=1.2 psf.

In lieu of rigid ceiling use purlins to brace BC @ 24" OC.

Refer to Dwg PIGBACKA0207 or PIGBACKB0207 for piggyback details. Portion of truss under piggyback is to be braced @ 24" oc unless otherwise specified.

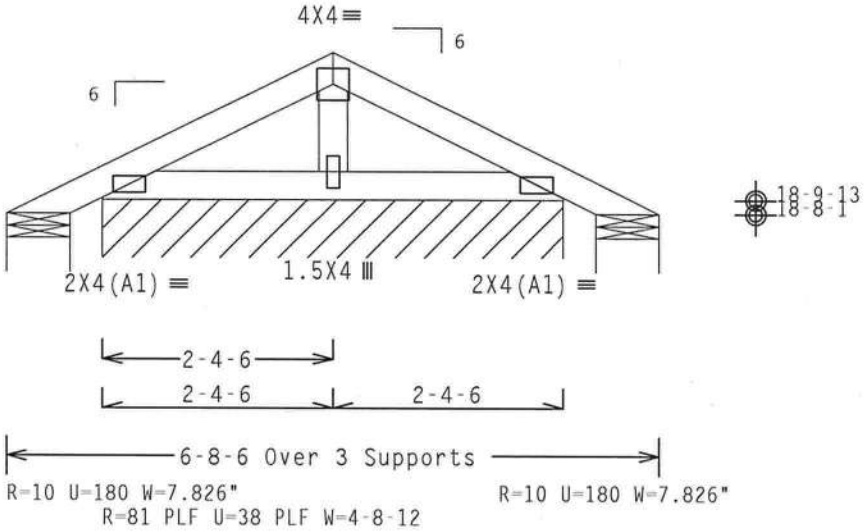

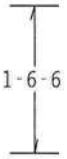

Design Crit: TPI-2002(STD)/FBC

PLT TYP. Wave

Cq/RT=1.00(1.25)/10(0) 7.25.0411 QTY:2 FL/-/4/-/-/R/- Scale =.5"/Ft.

ALPINE

ITW Building Components Group, Inc.
Haines City, FL 33844
FL Certificate of Authorization # 567

WARNING TRUSSES REQUIRE EXTREME CARE IN FABRICATION, HANDLING, SHIPPING, INSTALLING AND BRACING. REFER TO BCSI (BUILDING COMPONENT SAFETY INFORMATION), PUBLISHED BY TPI (TRUSS PLATE INSTITUTE, 218 NORTH LEE STREET, SUITE 312, ALEXANDRIA, VA, 22314) AND WTCA (WOOD TRUSS COUNCIL OF AMERICA, 6300 ENTERPRISE LANE, MADISON, WI 53719) FOR SAFETY PRACTICES PRIOR TO PERFORMING THESE FUNCTIONS. UNLESS OTHERWISE INDICATED TOP CHORD SHALL HAVE PROPERLY ATTACHED STRUCTURAL PANELS AND BOTTOM CHORD SHALL HAVE A PROPERLY ATTACHED RIGID CEILING.

IMPORTANTFURNISH A COPY OF THIS DESIGN TO THE INSTALLATION CONTRACTOR. ITW BCG, INC. SHALL NOT BE RESPONSIBLE FOR ANY DEVIATION FROM THIS DESIGN; ANY FAILURE TO BUILD THE TRUSS IN COMFORMANCE WITH TPI; OR FABRICATING, HANDLING, SHIPPING, INSTALLING & BRACING OF TRUSSES.
DESIGN CONFORMS WITH APPLICABLE PROVISIONS OF NDS (NATIONAL DESIGN SPEC. BY AF&PA) AND TPI. ITW BCG CONNECTOR PLATES ARE MADE OF 20/18/16GA (W.H/SS/K) ASTM A653 GRADE 40/60 (W. K/H.SS) GALV. STEEL. APPLY PLATES TO EACH FACE OF TRUSS AND, UNLESS OTHERWISE LOCATED ON THIS DESIGN, POSITION PER DRAWINGS 160A-Z. ANY INSPECTION OF PLATES FOLLOWED BY (I) SHALL BE PER ANNEX A3 OF TPI1-2002 SEC.3. A SEAL ON THIS DRAWING INDICATES ACCEPTANCE OF PROFESSIONAL ENGINEERING RESPONSIBILITY SOLELY FOR THE TRUSS COMPONENT DESIGN SHOWN. THE SUITABILITY AND USE OF THIS COMPONENT FOR ANY BUILDING IS THE RESPONSIBILITY OF THE BUILDING DESIGNER PER ANSI/TPI 1 SEC. 2.

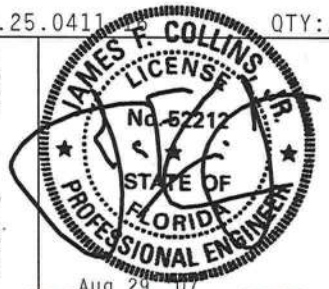

Aug 29 07

TC LL	20.0 PSF	REF R8228- 75884
TC DL	10.0 PSF	DATE 08/29/07
BC DL	2.0 PSF	DRW HCUSR8228 07241002
BC LL	0.0 PSF	HC-ENG TCE/AP
TOT.LD.	32.0 PSF	SEQN- 100905 REV
DUR.FAC.	1.25	FROM AH
SPACING	24.0"	JREF- 1TAA8228Z01

Top chord 2x4 SP #2 Dense
Bot chord 2x4 SP #2 Dense
Webs 2x4 SP #3

Deflection meets L/360 live and L/240 total load. Creep increase factor for dead load is 1.50.

See DWGS A11015EE0207 & GBLLETIN0207 for more requirements.

The Building Designer is responsible for the design of the roof and ceiling diaphragms, gable end shear walls, and supporting shear walls. Shear walls must provide continuous lateral restraint to the gable end. All connections to be designed by the Building Designer.

Gable end supports 8" max rake overhang.

110 mph wind, 15.00 ft mean hgt, ASCE 7-02, CLOSED bldg, Located anywhere in roof, CAT II, EXP B, wind TC DL=5.0 psf, wind BC DL=5.0 psf. Iw=1.00 GCpi(+/-)=0.18

Wind reactions based on MWFRS pressures.

See DWG VALTRUSS0207 for valley details.

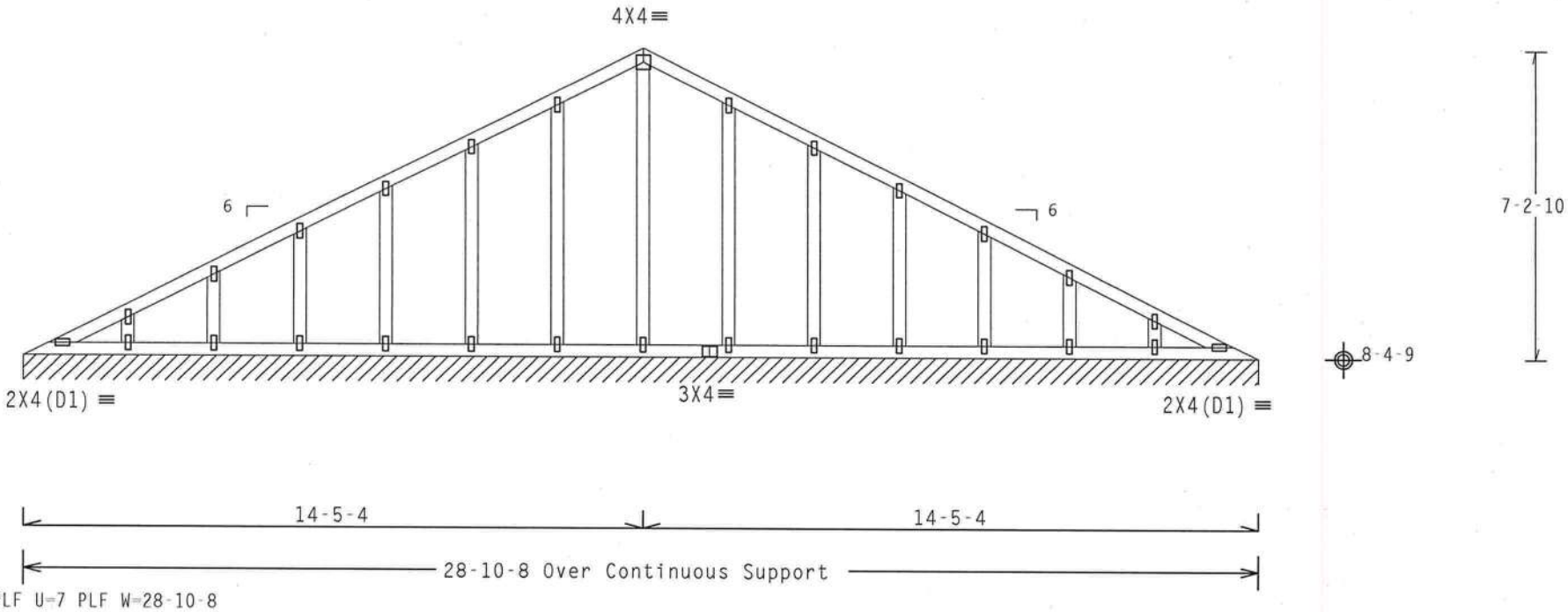

Note: All Plates Are 1.5X4 Except As Shown.

Design Crit: TPI-2002(STD)/FBC

PLT TYP. Wave Cq/RT=1.00(1.25)/10(0) 7.24.1230.17 QTY:1 FL/-/4/-/-/R/- Scale =.25"/Ft.

ALPINE

ITW Building Components Group, Inc.
Haines City, FL 33844
FL Certificate of Authorization #

WARNING TRUSSES REQUIRE EXTREME CARE IN FABRICATION, HANDLING, SHIPPING, INSTALLING AND BRACING. REFER TO BCSI (BUILDING COMPONENT SAFETY INFORMATION), PUBLISHED BY TPI (TRUSS PLATE INSTITUTE, 218 NORTH LEE STREET, SUITE 312, ALEXANDRIA, VA. 22314) AND WTCA (WOOD TRUSS COUNCIL OF AMERICA, 6300 ENTERPRISE LANE, MADISON, WI 53719) FOR SAFETY PRACTICES PRIOR TO PERFORMING THESE FUNCTIONS. UNLESS OTHERWISE INDICATED TOP CHORD SHALL HAVE PROPERLY ATTACHED STRUCTURAL PANELS AND BOTTOM CHORD SHALL HAVE A PROPERLY ATTACHED RIGID CEILING.

IMPORTANTFURNISH A COPY OF THIS DESIGN TO THE INSTALLATION CONTRACTOR. ITW BCG, INC. SHALL NOT BE RESPONSIBLE FOR ANY DEVIATION FROM THIS DESIGN; ANY FAILURE TO BUILD THE TRUSS IN COMFORMANCE WITH TPI; OR FABRICATING, HANDLING, SHIPPING, INSTALLING & BRACING OF TRUSSES.
DESIGN CONFORMS WITH APPLICABLE PROVISIONS OF NDS (NATIONAL DESIGN SPEC, BY AF&PA) AND TPI. ITW BCG CONNECTOR PLATES ARE MADE OF 20/18/16GA (W,H/SS/K) ASTM A653 GRADE 40/60 (W, K/H,SS) GALV. STEEL, APPLY PLATES TO EACH FACE OF TRUSS AND, UNLESS OTHERWISE LOCATED ON THIS DESIGN, POSITION PER DRAWINGS 160A-Z. ANY INSPECTION OF PLATES FOLLOWED BY (1) SHALL BE PER ANNEX A3 OF TPI1-2002 SEC.3. A SEAL ON THIS DRAWING INDICATES ACCEPTANCE OF PROFESSIONAL ENGINEERING RESPONSIBILITY SOLELY FOR THE TRUSS COMPONENT DESIGN SHOWN. THE SUITABILITY AND USE OF THIS COMPONENT FOR ANY BUILDING IS THE RESPONSIBILITY OF THE BUILDING DESIGNER PER ANSI/TPI 1 SEC. 2.

JAMES F. COLLINS JR. LICENSE No. 52242 STATE OF FLORIDA PROFESSIONAL ENGINEER

Aug

TC LL	20.0 PSF	REF	R8228- 75885
TC DL	10.0 PSF	DATE	08/29/07
BC DL	10.0 PSF	DRW	HCUSR8228 07241003
BC LL	0.0 PSF	HC-ENG	TCE/AP *
TOT.LD.	40.0 PSF	SEQN-	41324
DUR.FAC.	1.25	FROM	AH
SPACING	24.0"	JREF-	1TAA8228Z01

Top chord 2x4 SP #2 Dense
Bot chord 2x4 SP #2 Dense
Webs 2x4 SP #3

Deflection meets L/360 live and L/240 total load. Creep increase factor for dead load is 1.50.

110 mph wind, 15.00 ft mean hgt, ASCE 7-02, CLOSED bldg, not located within 4.50 ft from roof edge, CAT II, EXP B, wind TC DL=5.0 psf, wind BC DL=5.0 psf. Iw=1.00 GCpi(+/-)=0.18

Wind reactions based on MWFRS pressures.

See DWG VALTRUSS0207 for valley details.

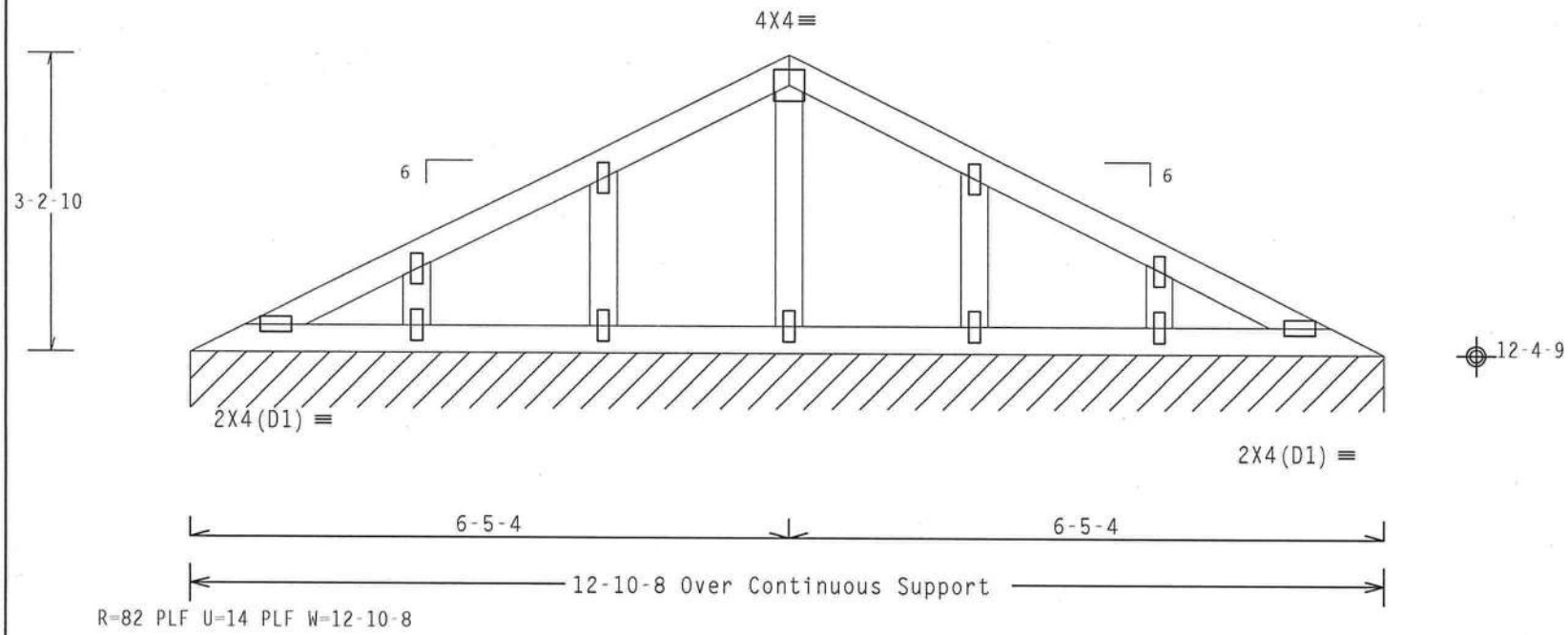

Note: All Plates Are 1.5X4 Except As Shown.

Design Crit: TPI-2002(STD)/FBC

PLT TYP. Wave Cq/RT=1.00(1.25)/10(0) 7.24.1230 QTY:1 FL/-/4/-/-/R/- Scale =.5"/Ft.

ALPINE

ITW Building Components Group, Inc.
Haines City, FL 33844
FL Certificate of Authorization #

WARNING TRUSSES REQUIRE EXTREME CARE IN FABRICATION, HANDLING, SHIPPING, INSTALLING AND BRACING. REFER TO BCSI (BUILDING COMPONENT SAFETY INFORMATION), PUBLISHED BY TPI (TRUSS PLATE INSTITUTE, 218 NORTH LEE STREET, SUITE 312, ALEXANDRIA, VA. 22314) AND WTCA (WOOD TRUSS COUNCIL OF AMERICA, 6300 ENTERPRISE LANE, MADISON, WI 53719) FOR SAFETY PRACTICES PRIOR TO PERFORMING THESE FUNCTIONS. UNLESS OTHERWISE INDICATED TOP CHORD SHALL HAVE PROPERLY ATTACHED STRUCTURAL PANELS AND BOTTOM CHORD SHALL HAVE A PROPERLY ATTACHED RIGID CEILING.

IMPORTANT FURNISH A COPY OF THIS DESIGN TO THE INSTALLATION CONTRACTOR. ITW BCG, INC. SHALL NOT BE RESPONSIBLE FOR ANY DEVIATION FROM THIS DESIGN; ANY FAILURE TO BUILD THE TRUSS IN COMFORMANCE WITH TPI; OR FABRICATING, HANDLING, SHIPPING, INSTALLING & BRACING OF TRUSSES. DESIGN CONFORMS WITH APPLICABLE PROVISIONS OF NDS (NATIONAL DESIGN SPEC. BY AF&PA) AND TPI. ITW BCG CONNECTOR PLATES ARE MADE OF 20/18/16GA (W,H/SS/K) ASTM A653 GRADE 40/60 (W, K/H,SS) GALV. STEEL. APPLY PLATES TO EACH FACE OF TRUSS AND, UNLESS OTHERWISE LOCATED ON THIS DESIGN, POSITION PER DRAWINGS 160A-Z. ANY INSPECTION OF PLATES FOLLOWED BY (1) SHALL BE PER ANNEX A3 OF TPI1-2002 SEC.3. A SEAL ON THIS DRAWING INDICATES ACCEPTANCE OF PROFESSIONAL ENGINEERING RESPONSIBILITY SOLELY FOR THE TRUSS COMPONENT DESIGN SHOWN. THE SUITABILITY AND USE OF THIS COMPONENT FOR ANY BUILDING IS THE RESPONSIBILITY OF THE BUILDING DESIGNER PER ANSI/TPI 1 SEC. 2.

JAMES F. COLLINS, JR. LICENSE No. 52212 STATE OF FLORIDA PROFESSIONAL ENGINEER

Aug

TC LL	20.0 PSF	REF	R8228- 75886
TC DL	10.0 PSF	DATE	08/29/07
BC DL	10.0 PSF	DRW	HCUSR8228 07241004
BC LL	0.0 PSF	HC-ENG	TCE/AP *
TOT.LD.	40.0 PSF	SEQN-	41344
DUR.FAC.	1.25	FROM	AH
SPACING	24.0"	JREF-	1TAA8228Z01

Top chord 2x4 SP #2 Dense
Bot chord 2x4 SP #2 Dense
Webs 2x4 SP #3

Deflection meets L/360 live and L/240 total load. Creep increase factor for dead load is 1.50.

110 mph wind, 15.00 ft mean hgt, ASCE 7-02, CLOSED bldg, not located within 4.50 ft from roof edge, CAT II, EXP B, wind TC DL=5.0 psf, wind BC DL=5.0 psf. Iw=1.00 GCpi(+/-)=0.18

Wind reactions based on MWFRS pressures.

See DWG VALTRUSS0207 for valley details.

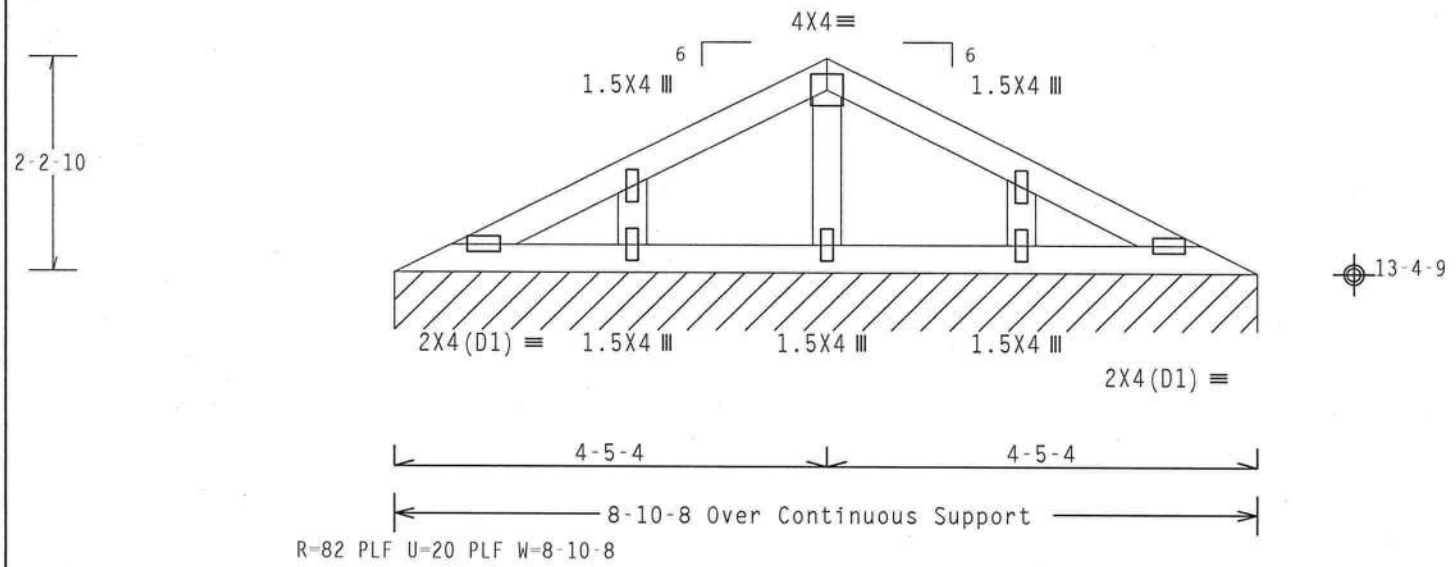

Design Crit: TPI-2002(STD)/FBC

PLT TYP. Wave

Cq/RT=1.00(1.25)/10(0) 7.24.1230 13 QTY:1 FL/-/4/-/-/R/- Scale =.5"/Ft.

ALPINE

ITW Building Components Group, Inc.
Haines City, FL 33844
FL Certificate of Authorization #

WARNING TRUSSES REQUIRE EXTREME CARE IN FABRICATION, HANDLING, SHIPPING, INSTALLING AND BRACING. REFER TO BCSI (BUILDING COMPONENT SAFETY INFORMATION), PUBLISHED BY TPI (TRUSS PLATE INSTITUTE, 218 NORTH LEE STREET, SUITE 312, ALEXANDRIA, VA. 22314) AND WTCA (WOOD TRUSS COUNCIL OF AMERICA, 6300 ENTERPRISE LANE, MADISON, WI 53719) FOR SAFETY PRACTICES PRIOR TO PERFORMING THESE FUNCTIONS. UNLESS OTHERWISE INDICATED TOP CHORD SHALL HAVE PROPERLY ATTACHED STRUCTURAL PANELS AND BOTTOM CHORD SHALL HAVE A PROPERLY ATTACHED RIGID CEILING.

IMPORTANTFURNISH A COPY OF THIS DESIGN TO THE INSTALLATION CONTRACTOR. ITW BCG, INC. SHALL NOT BE RESPONSIBLE FOR ANY DEVIATION FROM THIS DESIGN; ANY FAILURE TO BUILD THE TRUSS IN COMFORMANCE WITH TPI; OR FABRICATING, HANDLING, SHIPPING, INSTALLING & BRACING OF TRUSSES.
DESIGN CONFORMS WITH APPLICABLE PROVISIONS OF NDS (NATIONAL DESIGN SPEC. BY AF&PA) AND TPI. ITW BCG CONNECTOR PLATES ARE MADE OF 20/18/16GA (W.H/SS/K) ASTM A653 GRADE 40/60 (W, K/H,SS) GALV. STEEL. APPLY PLATES TO EACH FACE OF TRUSS AND, UNLESS OTHERWISE LOCATED ON THIS DESIGN, POSITION PER DRAWINGS 160A-Z. ANY INSPECTION OF PLATES FOLLOWED BY (1) SHALL BE PER ANNEX A3 OF TPI1-2002 SEC.3. A SEAL ON THIS DRAWING INDICATES ACCEPTANCE OF PROFESSIONAL ENGINEERING RESPONSIBILITY SOLELY FOR THE TRUSS COMPONENT DESIGN SHOWN. THE SUITABILITY AND USE OF THIS COMPONENT FOR ANY BUILDING IS THE RESPONSIBILITY OF THE BUILDING DESIGNER PER ANSI/TPI 1 SEC. 2.

JAMES F. COLLINS, JR. LICENSE No. 52212 STATE OF FLORIDA PROFESSIONAL ENGINEER

Aug

TC LL	20.0 PSF	REF R8228- 75887
TC DL	10.0 PSF	DATE 08/29/07
BC DL	10.0 PSF	DRW HCUSR8228 07241020
BC LL	0.0 PSF	HC-ENG TCE/AP *
TOT.LD.	40.0 PSF	SEQN- 41348
DUR.FAC.	1.25	FROM AH
SPACING	24.0"	JREF- 1TAA8228Z01

Top chord 2x4 SP #2 Dense
Bot chord 2x4 SP #2 Dense
Webs 2x4 SP #3

Deflection meets L/360 live and L/240 total load. Creep increase factor for dead load is 1.50.

110 mph wind, 15.13 ft mean hgt, ASCE 7-02, CLOSED bldg, not located within 4.50 ft from roof edge, CAT II, EXP B, wind TC DL=5.0 psf, wind BC DL=5.0 psf. Iw=1.00 GCpi(+/-)=0.18

Wind reactions based on MWFRS pressures.

See DWG VALTRUSS0207 for valley details.

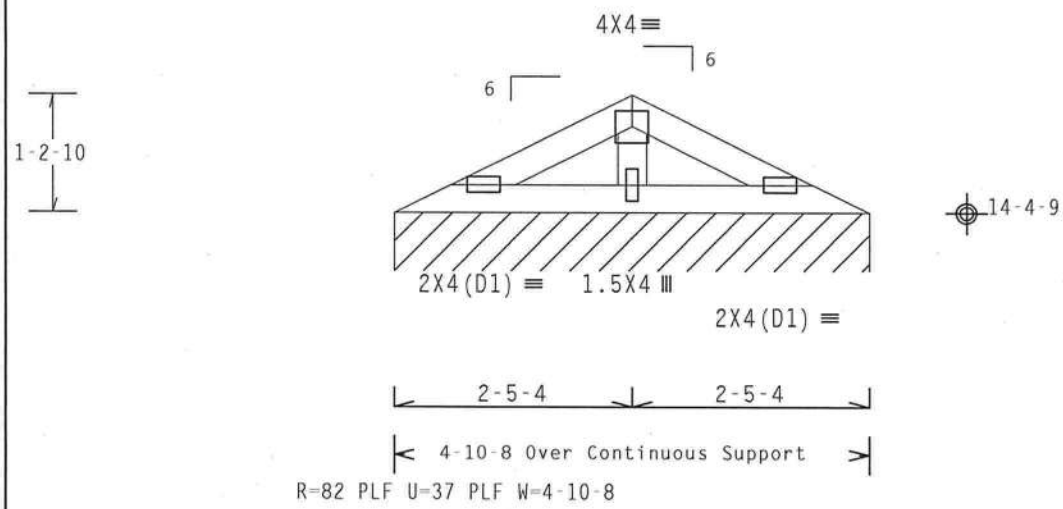

R=82 PLF U=37 PLF W=4-10-8

Design Crit: TPI-2002(STD)/FBC
Cq/RT=1.00(1.25)/10(0) 7.24.1230

PLT TYP. Wave

QTY:1 FL/-/4/-/-/R/- Scale =.5"/Ft.

ALPINE
ITW Building Components Group, Inc.
Haines City, FL 33844
FL Certificate of Authorization #

WARNING TRUSSES REQUIRE EXTREME CARE IN FABRICATION, HANDLING, SHIPPING, INSTALLING AND BRACING. REFER TO BCSI (BUILDING COMPONENT SAFETY INFORMATION), PUBLISHED BY TPI (TRUSS PLATE INSTITUTE, 218 NORTH LEE STREET, SUITE 312, ALEXANDRIA, VA, 22314) AND WTCA (WOOD TRUSS COUNCIL OF AMERICA, 6300 ENTERPRISE LANE, MADISON, WI 53719) FOR SAFETY PRACTICES PRIOR TO PERFORMING THESE FUNCTIONS. UNLESS OTHERWISE INDICATED TOP CHORD SHALL HAVE PROPERLY ATTACHED STRUCTURAL PANELS AND BOTTOM CHORD SHALL HAVE A PROPERLY ATTACHED RIGID CEILING.

IMPORTANTFURNISH A COPY OF THIS DESIGN TO THE INSTALLATION CONTRACTOR. ITW BCG, INC. SHALL NOT BE RESPONSIBLE FOR ANY DEVIATION FROM THIS DESIGN; ANY FAILURE TO BUILD THE TRUSS IN COMFORMANCE WITH TPI; OR FABRICATING, HANDLING, SHIPPING, INSTALLING & BRACING OF TRUSSES.
DESIGN CONFORMS WITH APPLICABLE PROVISIONS OF NDS (NATIONAL DESIGN SPEC. BY AF&PA) AND TPI. ITW BCG CONNECTOR PLATES ARE MADE OF 20/18/16GA (W,H/SS/K) ASTM A653 GRADE 40/60 (W, K/H,SS) GALV. STEEL. APPLY PLATES TO EACH FACE OF TRUSS AND, UNLESS OTHERWISE LOCATED ON THIS DESIGN, POSITION PER DRAWINGS 160A-Z. ANY INSPECTION OF PLATES FOLLOWED BY (1) SHALL BE PER ANNEX A3 OF TPI1-2002 SEC.3. A SEAL ON THIS DRAWING INDICATES ACCEPTANCE OF PROFESSIONAL ENGINEERING RESPONSIBILITY SOLELY FOR THE TRUSS COMPONENT DESIGN SHOWN. THE SUITABILITY AND USE OF THIS COMPONENT FOR ANY BUILDING IS THE RESPONSIBILITY OF THE BUILDING DESIGNER PER ANSI/TPI 1 SEC. 2.

JAMES F. COLLINS, JR. LICENSE No. 52212 STATE OF FLORIDA PROFESSIONAL ENGINEER

Aug 29, 07

TC LL	20.0 PSF	REF	R8228- 75888
TC DL	10.0 PSF	DATE	08/29/07
BC DL	10.0 PSF	DRW	HCUSR8228 07241021
BC LL	0.0 PSF	HC-ENG	TCE/AP *
TOT.LD.	40.0 PSF	SEQN-	41352
DUR.FAC.	1.25	FROM	AH
SPACING	24.0"	JREF-	1TAA8228Z01

Top chord 2x4 SP #2 Dense
Bot chord 2x4 SP #2 Dense
Webs 2x4 SP #3

Deflection meets L/360 live and L/240 total load. Creep increase factor for dead load is 1.50.

110 mph wind, 15.00 ft mean hgt, ASCE 7-02, CLOSED bldg, Located anywhere in roof, CAT II, EXP B, wind TC DL=5.0 psf, wind BC DL=5.0 psf. Iw=1.00 GCpi(+/-)=0.18

Wind reactions based on MWFRS pressures.

See DWG VALTRUSS0207 for valley details.

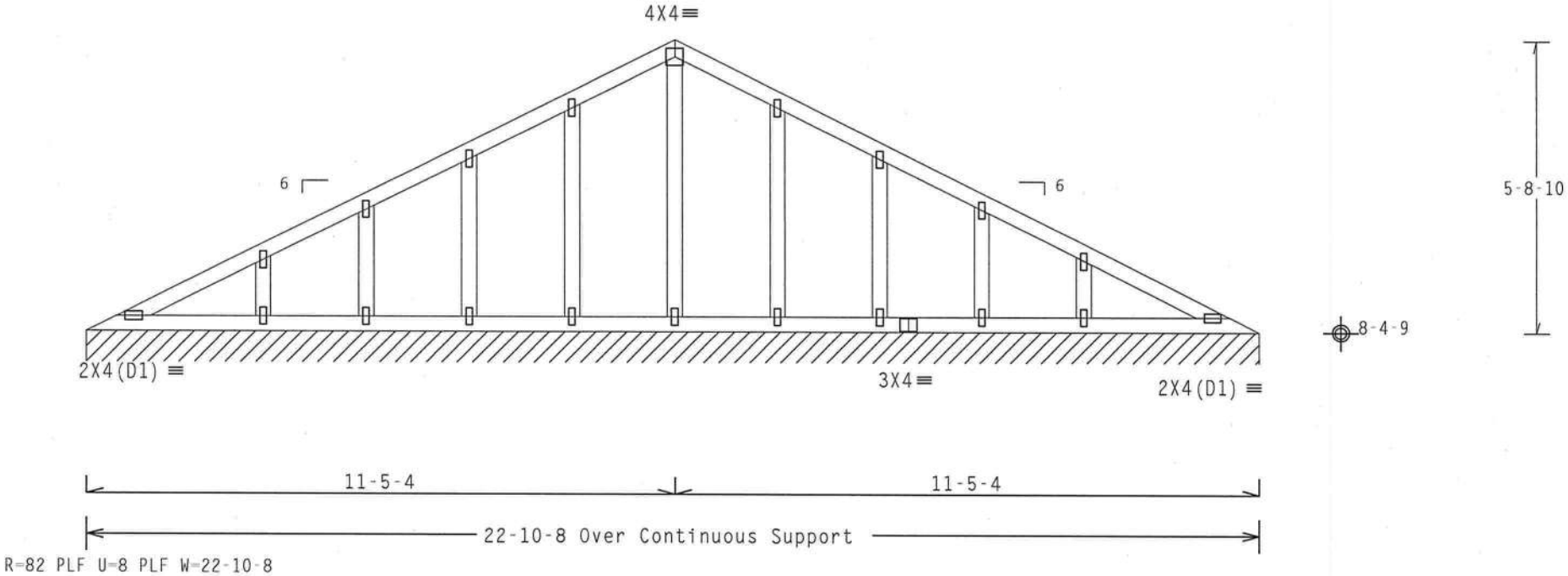

Note: All Plates Are 1.5X4 Except As Shown.

Design Crit: TPI-2002(STD)/FBC

PLT TYP. Wave Cq/RT=1.00(1.25)/10(0) 7.24.1230 QTY:1 FL/-/4/-/-/R/- Scale =.3125"/Ft.

ALPINE

ITW Building Components Group, Inc.
Haines City, FL 33844
FL Certificate of Authorization # 567

WARNING TRUSSES REQUIRE EXTREME CARE IN FABRICATION, HANDLING, SHIPPING, INSTALLING AND BRACING. REFER TO BCSI (BUILDING COMPONENT SAFETY INFORMATION), PUBLISHED BY TPI (TRUSS PLATE INSTITUTE, 218 NORTH LEE STREET, SUITE 312, ALEXANDRIA, VA, 22314) AND WTCA (WOOD TRUSS COUNCIL OF AMERICA, 6300 ENTERPRISE LANE, MADISON, WI 53719) FOR SAFETY PRACTICES PRIOR TO PERFORMING THESE FUNCTIONS. UNLESS OTHERWISE INDICATED TOP CHORD SHALL HAVE PROPERLY ATTACHED STRUCTURAL PANELS AND BOTTOM CHORD SHALL HAVE A PROPERLY ATTACHED RIGID CEILING.

IMPORTANTFURNISH A COPY OF THIS DESIGN TO THE INSTALLATION CONTRACTOR. ITW BCG, INC. SHALL NOT BE RESPONSIBLE FOR ANY DEVIATION FROM THIS DESIGN; ANY FAILURE TO BUILD THE TRUSS IN COMFORMANCE WITH TPI; OR FABRICATING, HANDLING, SHIPPING, INSTALLING & BRACING OF TRUSSES.
DESIGN CONFORMS WITH APPLICABLE PROVISIONS OF NDS (NATIONAL DESIGN SPEC. BY AF&PA) AND TPI. ITW BCG CONNECTOR PLATES ARE MADE OF 20/18/16GA (W.H/SS/K) ASTM A653 GRADE 40/60 (W, K/H,SS) GALV. STEEL. APPLY PLATES TO EACH FACE OF TRUSS AND, UNLESS OTHERWISE LOCATED ON THIS DESIGN, POSITION PER DRAWINGS 160A-Z. ANY INSPECTION OF PLATES FOLLOWED BY (1) SHALL BE PER ANNEX A3 OF TPI1-2002 SEC.3. A SEAL ON THIS DRAWING INDICATES ACCEPTANCE OF PROFESSIONAL ENGINEERING RESPONSIBILITY SOLELY FOR THE TRUSS COMPONENT DESIGN SHOWN. THE SUITABILITY AND USE OF THIS COMPONENT FOR ANY BUILDING IS THE RESPONSIBILITY OF THE BUILDING DESIGNER PER ANSI/TPI 1 SEC. 2.

JAMES F. COLLINS, JR. LICENSE No. 52212 STATE OF FLORIDA PROFESSIONAL ENGINEER

Aug 29, 07

TC LL	20.0 PSF	REF	R8228- 75889
TC DL	10.0 PSF	DATE	08/29/07
BC DL	10.0 PSF	DRW	HCUSR8228 07241022
BC LL	0.0 PSF	HC-ENG	TCE/AP *
TOT.LD.	40.0 PSF	SEQN-	41374
DUR.FAC.	1.25	FROM	AH
SPACING	24.0"	JREF-	1TAA8228Z01

Top chord 2x4 SP #2 Dense
Bot chord 2x4 SP #2 Dense
Webs 2x4 SP #3

Deflection meets L/360 live and L/240 total load. Creep increase factor for dead load is 1.50.

110 mph wind, 15.00 ft mean hgt, ASCE 7-02, CLOSED bldg, Located anywhere in roof, CAT II, EXP B, wind TC DL=5.0 psf, wind BC DL=5.0 psf. Iw=1.00 GCpi(+/-)=0.18

Wind reactions based on MWFRS pressures.

See DWG VALTRUSS0207 for valley details.

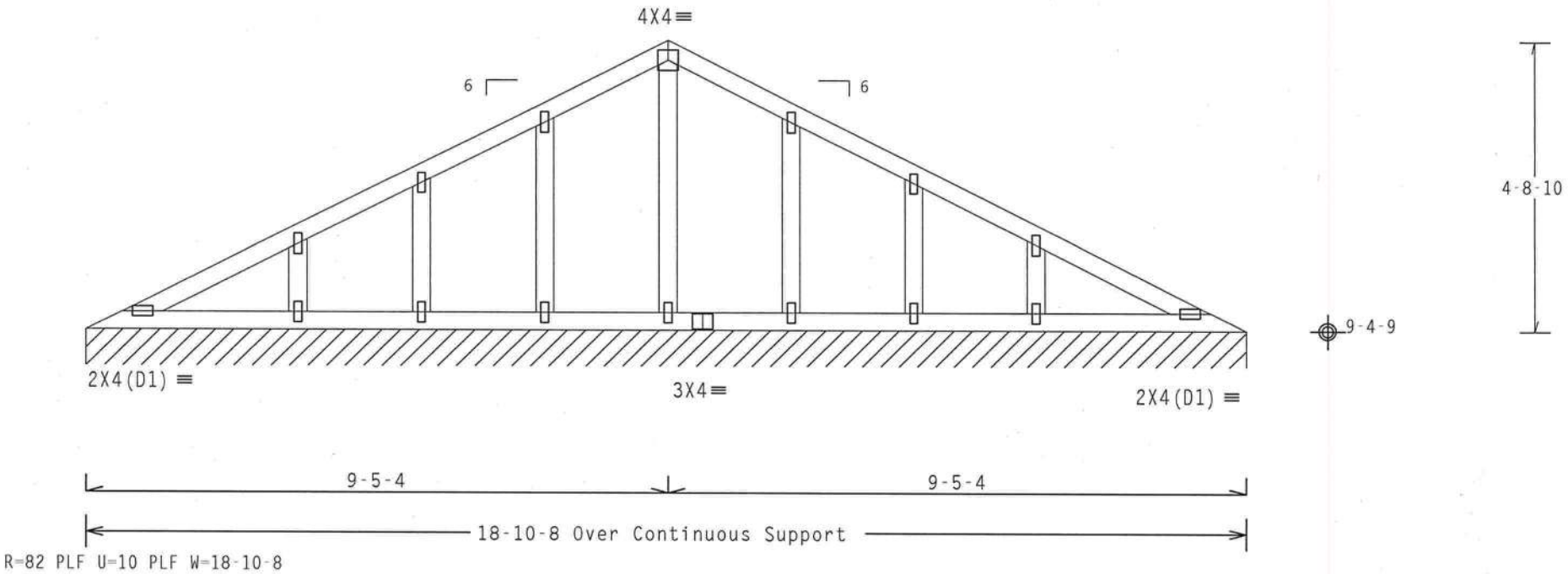

Note: All Plates Are 1.5X4 Except As Shown.

Design Crit: TPI-2002(STD)/FBC

PLT TYP. Wave Cq/RT=1.00(1.25)/10(0) 7.24.1230.1 QTY:1 FL/-/4/-/-/R/- Scale =.375"/Ft.

ALPINE

ITW Building Components Group, Inc.
Haines City, FL 33844
FL Certificate of Authorization # 567

WARNING TRUSSES REQUIRE EXTREME CARE IN FABRICATION, HANDLING, SHIPPING, INSTALLING AND BRACING. REFER TO BCSI (BUILDING COMPONENT SAFETY INFORMATION), PUBLISHED BY TPI (TRUSS PLATE INSTITUTE, 218 NORTH LEE STREET, SUITE 312, ALEXANDRIA, VA, 22314) AND WTCA (WOOD TRUSS COUNCIL OF AMERICA, 6300 ENTERPRISE LANE, MADISON, WI 53719) FOR SAFETY PRACTICES PRIOR TO PERFORMING THESE FUNCTIONS. UNLESS OTHERWISE INDICATED TOP CHORD SHALL HAVE PROPERLY ATTACHED STRUCTURAL PANELS AND BOTTOM CHORD SHALL HAVE A PROPERLY ATTACHED RIGID CEILING.

IMPORTANTFURNISH A COPY OF THIS DESIGN TO THE INSTALLATION CONTRACTOR. ITW BCG, INC. SHALL NOT BE RESPONSIBLE FOR ANY DEVIATION FROM THIS DESIGN; ANY FAILURE TO BUILD THE TRUSS IN COMFORMANCE WITH TPI; OR FABRICATING, HANDLING, SHIPPING, INSTALLING & BRACING OF TRUSSES.
DESIGN CONFORMS WITH APPLICABLE PROVISIONS OF NDS (NATIONAL DESIGN SPEC. BY AF&PA) AND TPI. ITW BCG CONNECTOR PLATES ARE MADE OF 20/18/16GA (W,H/SS/K) ASTM A653 GRADE 40/60 (W, K/H,SS) GALV. STEEL. APPLY PLATES TO EACH FACE OF TRUSS AND, UNLESS OTHERWISE LOCATED ON THIS DESIGN, POSITION PER DRAWINGS 160A-Z. ANY INSPECTION OF PLATES FOLLOWED BY (1) SHALL BE PER ANNEX A3 OF TPI1-2002 SEC.3. A SEAL ON THIS DRAWING INDICATES ACCEPTANCE OF PROFESSIONAL ENGINEERING RESPONSIBILITY SOLELY FOR THE TRUSS COMPONENT DESIGN SHOWN. THE SUITABILITY AND USE OF THIS COMPONENT FOR ANY BUILDING IS THE RESPONSIBILITY OF THE BUILDING DESIGNER PER ANSI/TPI 1 SEC. 2.

JAMES F. COLLINS JR. LICENSE No. 52212 STATE OF FLORIDA PROFESSIONAL ENGINEER

Aug

TC LL	20.0 PSF	REF R8228- 75890
TC DL	10.0 PSF	DATE 08/29/07
BC DL	10.0 PSF	DRW HCUSR8228 07241023
BC LL	0.0 PSF	HC-ENG TCE/AP *
TOT.LD.	40.0 PSF	SEQN- 41369
DUR.FAC.	1.25	FROM AH
SPACING	24.0"	JREF- 1TAA8228Z01

Top chord 2x4 SP #2 Dense
Bot chord 2x4 SP #2 Dense
Webs 2x4 SP #3

Deflection meets L/360 live and L/240 total load. Creep increase factor for dead load is 1.50.

110 mph wind, 15.00 ft mean hgt, ASCE 7-02, CLOSED bldg, not located within 4.50 ft from roof edge, CAT II, EXP B, wind TC DL=5.0 psf, wind BC DL=5.0 psf. Iw=1.00 GCpi(+/-)=0.18

Wind reactions based on MWFRS pressures.

See DWG VALTRUSS0207 for valley details.

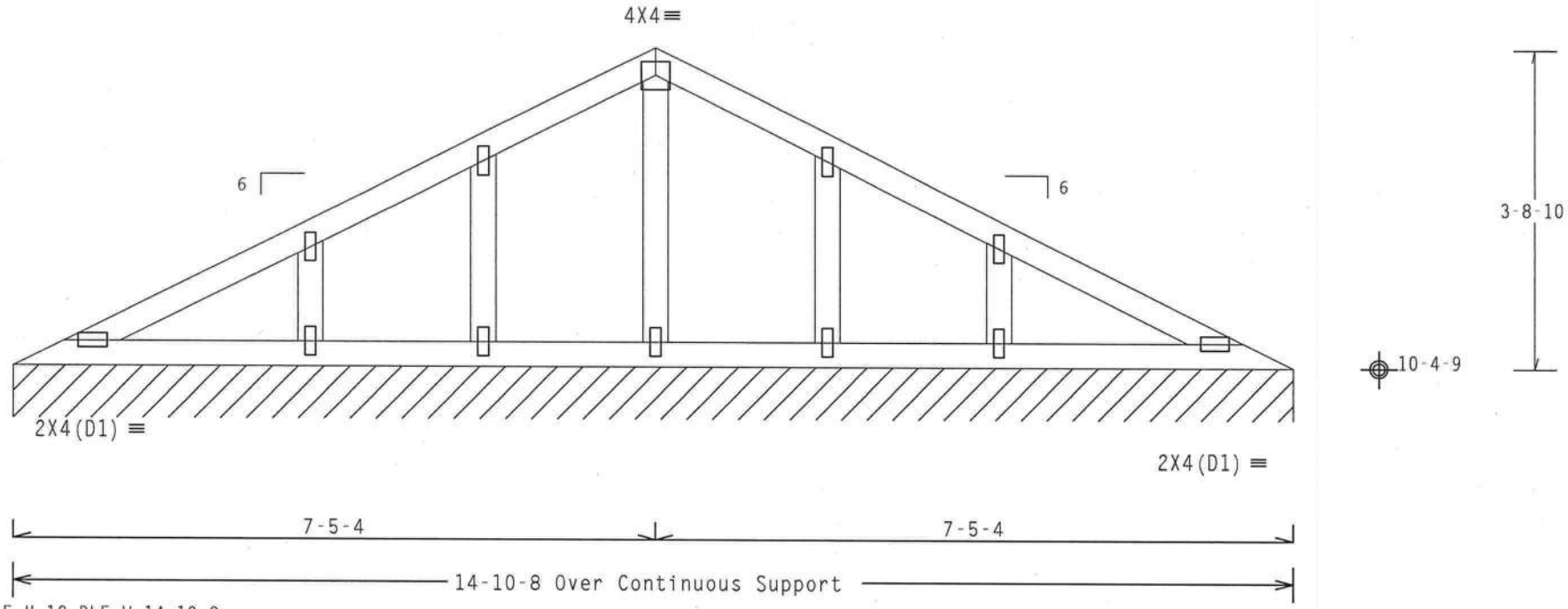

R=82 PLF U=12 PLF W=14-10-8

Note: All Plates Are 1.5X4 Except As Shown.

Design Crit: TPI-2002(STD)/FBC

PLT TYP. Wave Cq/RT=1.00(1.25)/10(0) 7.24.1230 QTY:1 FL/-/4/-/-/R/- Scale =.5"/Ft.

ALPINE

ITW Building Components Group, Inc.
Haines City, FL 33844
FL Certificate of Authorization # 567

WARNING TRUSSES REQUIRE EXTREME CARE IN FABRICATION, HANDLING, SHIPPING, INSTALLING AND BRACING. REFER TO BCSI (BUILDING COMPONENT SAFETY INFORMATION), PUBLISHED BY TPI (TRUSS PLATE INSTITUTE, 218 NORTH LEE STREET, SUITE 312, ALEXANDRIA, VA. 22314) AND WTCA (WOOD TRUSS COUNCIL OF AMERICA, 6300 ENTERPRISE LANE, MADISON, WI 53719) FOR SAFETY PRACTICES PRIOR TO PERFORMING THESE FUNCTIONS. UNLESS OTHERWISE INDICATED TOP CHORD SHALL HAVE PROPERLY ATTACHED STRUCTURAL PANELS AND BOTTOM CHORD SHALL HAVE A PROPERLY ATTACHED RIGID CEILING.

IMPORTANTFURNISH A COPY OF THIS DESIGN TO THE INSTALLATION CONTRACTOR. ITW BCG, INC. SHALL NOT BE RESPONSIBLE FOR ANY DEVIATION FROM THIS DESIGN; ANY FAILURE TO BUILD THE TRUSS IN COMFORMANCE WITH TPI; OR FABRICATING, HANDLING, SHIPPING, INSTALLING & BRACING OF TRUSSES.
DESIGN CONFORMS WITH APPLICABLE PROVISIONS OF NDS (NATIONAL DESIGN SPEC, BY AF&PA) AND TPI. ITW BCG CONNECTOR PLATES ARE MADE OF 20/18/16GA (W,H/SS/K) ASTM A653 GRADE 40/60 (W, K/H,SS) GALV. STEEL. APPLY PLATES TO EACH FACE OF TRUSS AND, UNLESS OTHERWISE LOCATED ON THIS DESIGN, POSITION PER DRAWINGS 160A-Z. ANY INSPECTION OF PLATES FOLLOWED BY (1) SHALL BE PER ANNEX A3 OF TPI1-2002 SEC.3. A SEAL ON THIS DRAWING INDICATES ACCEPTANCE OF PROFESSIONAL ENGINEERING RESPONSIBILITY SOLELY FOR THE TRUSS COMPONENT DESIGN SHOWN. THE SUITABILITY AND USE OF THIS COMPONENT FOR ANY BUILDING IS THE RESPONSIBILITY OF THE BUILDING DESIGNER PER ANSI/TPI 1 SEC. 2.

JAMES F. COLLINS LICENSE No. 52212 STATE OF FLORIDA PROFESSIONAL ENGINEER

Aug

TC LL	20.0 PSF	REF R8228- 75891
TC DL	10.0 PSF	DATE 08/29/07
BC DL	10.0 PSF	DRW HCUSR8228 07241024
BC LL	0.0 PSF	HC-ENG TCE/AP *
TOT.LD.	40.0 PSF	SEQN- 41364
DUR.FAC.	1.25	FROM AH
SPACING	24.0"	JREF- 1TAA8228Z01

Top chord 2x4 SP #2 Dense
Bot chord 2x4 SP #2 Dense
Webs 2x4 SP #3

Deflection meets L/360 live and L/240 total load. Creep increase factor for dead load is 1.50.

110 mph wind, 15.00 ft mean hgt, ASCE 7-02, CLOSED bldg, not located within 4.50 ft from roof edge, CAT II, EXP B, wind TC DL=5.0 psf, wind BC DL=5.0 psf. Iw=1.00 GCpi(+/-)=0.18

Wind reactions based on MWFRS pressures.

See DWG VALTRUSS0207 for valley details.

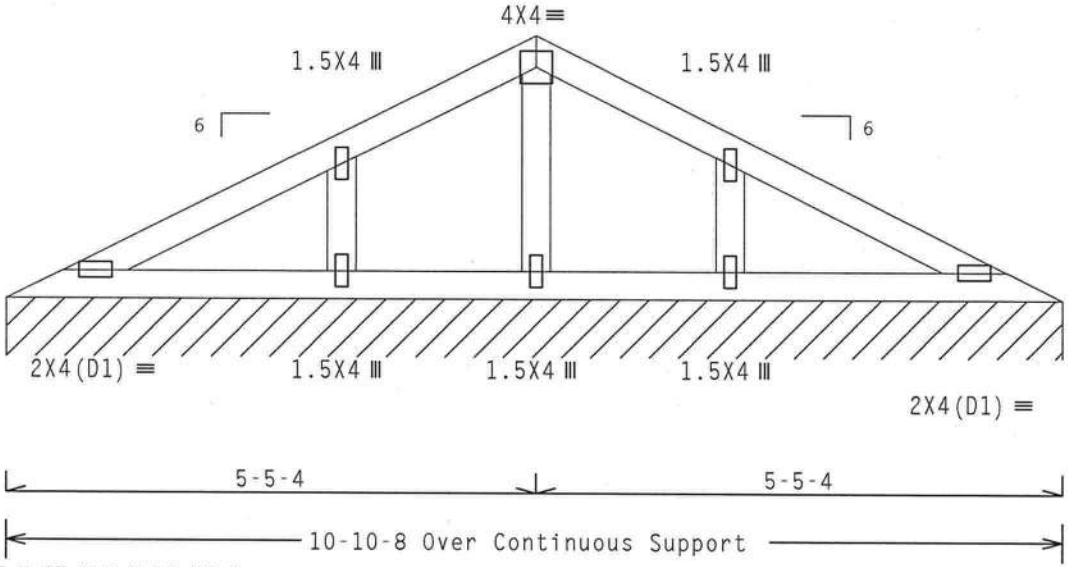

R=82 PLF U=17 PLF W=10-10-8

2-8-10

11-4-9

Design Crit: TPI-2002(STD)/FBC
Cq/RT=1.00(1.25)/10(0) 7.24.1230

PLT TYP. Wave

QTY:1 FL/-/4/-/-/R/-

Scale =.5"/Ft.

ALPINE

ITW Building Components Group, Inc.
Haines City, FL 33844
FL Certificate of Authorization #

WARNING TRUSSES REQUIRE EXTREME CARE IN FABRICATION, HANDLING, SHIPPING, INSTALLING AND BRACING. REFER TO BCSI (BUILDING COMPONENT SAFETY INFORMATION), PUBLISHED BY TPI (TRUSS PLATE INSTITUTE, 218 NORTH LEE STREET, SUITE 312, ALEXANDRIA, VA. 22314) AND WTCA (WOOD TRUSS COUNCIL OF AMERICA, 6300 ENTERPRISE LANE, MADISON, WI 53719) FOR SAFETY PRACTICES PRIOR TO PERFORMING THESE FUNCTIONS. UNLESS OTHERWISE INDICATED TOP CHORD SHALL HAVE PROPERLY ATTACHED STRUCTURAL PANELS AND BOTTOM CHORD SHALL HAVE A PROPERLY ATTACHED RIGID CEILING.

IMPORTANTFURNISH A COPY OF THIS DESIGN TO THE INSTALLATION CONTRACTOR. ITW BCG, INC. SHALL NOT BE RESPONSIBLE FOR ANY DEVIATION FROM THIS DESIGN; ANY FAILURE TO BUILD THE TRUSS IN COMFORMANCE WITH TPI; OR FABRICATING, HANDLING, SHIPPING, INSTALLING & BRACING OF TRUSSES. DESIGN CONFORMS WITH APPLICABLE PROVISIONS OF NDS (NATIONAL DESIGN SPEC, BY AF&PA) AND TPI. ITW BCG CONNECTOR PLATES ARE MADE OF 20/18/16GA (W,H/SS/K) ASTM A653 GRADE 40/60 (W, K/H,SS) GALV. STEEL. APPLY PLATES TO EACH FACE OF TRUSS AND, UNLESS OTHERWISE LOCATED ON THIS DESIGN, POSITION PER DRAWINGS 160A-Z. ANY INSPECTION OF PLATES FOLLOWED BY (1) SHALL BE PER ANNEX A3 OF TPI1-2002 SEC.3. A SEAL ON THIS DRAWING INDICATES ACCEPTANCE OF PROFESSIONAL ENGINEERING RESPONSIBILITY SOLELY FOR THE TRUSS COMPONENT DESIGN SHOWN. THE SUITABILITY AND USE OF THIS COMPONENT FOR ANY BUILDING IS THE RESPONSIBILITY OF THE BUILDING DESIGNER PER ANSI/TPI 1 SEC. 2.

JAMES F. COLLINS, JR. LICENSE No. 52212 STATE OF FLORIDA PROFESSIONAL ENGINEER

Aug 29 07

TC LL	20.0 PSF	REF	R8228- 75892
TC DL	10.0 PSF	DATE	08/29/07
BC DL	10.0 PSF	DRW	HCUSR8228 07241025
BC LL	0.0 PSF	HC-ENG	TCE/AP *
TOT.LD.	40.0 PSF	SEQN-	41360
DUR.FAC.	1.25	FROM	AH
SPACING	24.0"	JREF-	1TAA8228Z01

Top chord 2x4 SP #2 Dense
Bot chord 2x4 SP #2 Dense
Webs 2x4 SP #3

Deflection meets L/360 live and L/240 total load. Creep increase factor for dead load is 1.50.

110 mph wind, 15.00 ft mean hgt, ASCE 7-02, CLOSED bldg, not located within 4.50 ft from roof edge, CAT II, EXP B, wind TC DL=5.0 psf, wind BC DL=5.0 psf. Iw=1.00 GCpi(+/-)=0.18

Wind reactions based on MWFRS pressures.

See DWG VALTRUSS0207 for valley details.

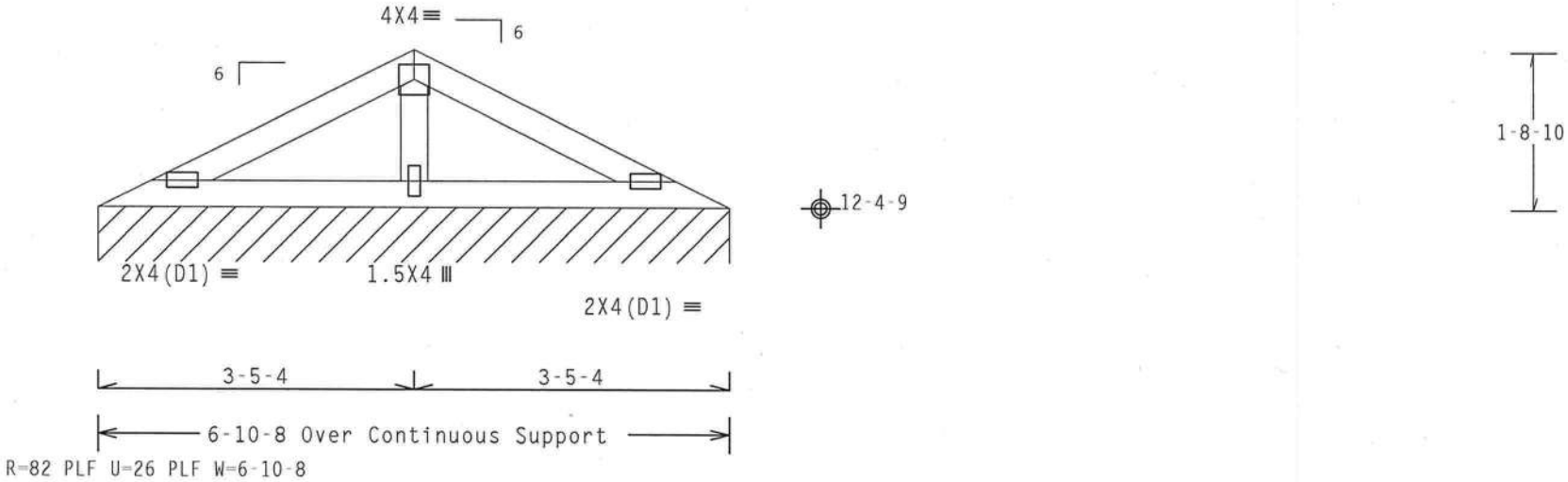

Design Crit: TPI-2002(STD)/FBC
Cq/RT=1.00(1.25)/10(0) 7.24.1230

PLT TYP. Wave

QTY:1 FL/-/4/-/-/R/- Scale =.5"/Ft.

ALPINE

ITW Building Components Group, Inc.
Haines City, FL 33844
FL Certificate of Authorization #

WARNING TRUSSES REQUIRE EXTREME CARE IN FABRICATION, HANDLING, SHIPPING, INSTALLING AND BRACING. REFER TO BCSI (BUILDING COMPONENT SAFETY INFORMATION), PUBLISHED BY TPI (TRUSS PLATE INSTITUTE, 218 NORTH LEE STREET, SUITE 312, ALEXANDRIA, VA, 22314) AND WTCA (WOOD TRUSS COUNCIL OF AMERICA, 6300 ENTERPRISE LANE, MADISON, WI 53719) FOR SAFETY PRACTICES PRIOR TO PERFORMING THESE FUNCTIONS. UNLESS OTHERWISE INDICATED TOP CHORD SHALL HAVE PROPERLY ATTACHED STRUCTURAL PANELS AND BOTTOM CHORD SHALL HAVE A PROPERLY ATTACHED RIGID CEILING.

IMPORTANTFURNISH A COPY OF THIS DESIGN TO THE INSTALLATION CONTRACTOR. ITW BCG, INC. SHALL NOT BE RESPONSIBLE FOR ANY DEVIATION FROM THIS DESIGN; ANY FAILURE TO BUILD THE TRUSS IN COMFORMANCE WITH TPI; OR FABRICATING, HANDLING, SHIPPING, INSTALLING & BRACING OF TRUSSES.
DESIGN CONFORMS WITH APPLICABLE PROVISIONS OF NDS (NATIONAL DESIGN SPEC. BY AF&PA) AND TPI. ITW BCG CONNECTOR PLATES ARE MADE OF 20/18/16GA (W,H/SS/K) ASTM A653 GRADE 40/60 (W, K/H,SS) GALV. STEEL. APPLY PLATES TO EACH FACE OF TRUSS AND, UNLESS OTHERWISE LOCATED ON THIS DESIGN, POSITION PER DRAWINGS 160A-Z. ANY INSPECTION OF PLATES FOLLOWED BY (1) SHALL BE PER ANNEX A3 OF TPI1-2002 SEC.3. A SEAL ON THIS DRAWING INDICATES ACCEPTANCE OF PROFESSIONAL ENGINEERING RESPONSIBILITY SOLELY FOR THE TRUSS COMPONENT DESIGN SHOWN. THE SUITABILITY AND USE OF THIS COMPONENT FOR ANY BUILDING IS THE RESPONSIBILITY OF THE BUILDING DESIGNER PER ANSI/TPI 1 SEC. 2.

JAMES F. COLLINS, JR. LICENSE No. 52212 STATE OF FLORIDA PROFESSIONAL ENGINEER
Aug 29, 07

TC LL	20.0 PSF	REF	R8228- 75893
TC DL	10.0 PSF	DATE	08/29/07
BC DL	10.0 PSF	DRW	HCUSR8228 07241026
BC LL	0.0 PSF	HC-ENG	TCE/AP *
TOT.LD.	40.0 PSF	SEQN-	41356
DUR.FAC.	1.25	FROM	AH
SPACING	24.0"	JREF-	1TAA8228Z01

(7-256--OWNER BUILDER Lee Blatter -- 965-7931 , ** - V2)

Top chord 2x4 SP #2 Dense
Bot chord 2x4 SP #2 Dense
Webs 2x4 SP #3

Deflection meets L/360 live and L/240 total load. Creep increase factor for dead load is 1.50.

110 mph wind, 15.00 ft mean hgt, ASCE 7-02, CLOSED bldg, Located anywhere in roof, CAT II, EXP B, wind TC DL=5.0 psf, wind BC DL=5.0 psf. Iw=1.00 GCpi(+/-)=0.18

Wind reactions based on MWFRS pressures.

See DWG VALTRUSS0207 for valley details.

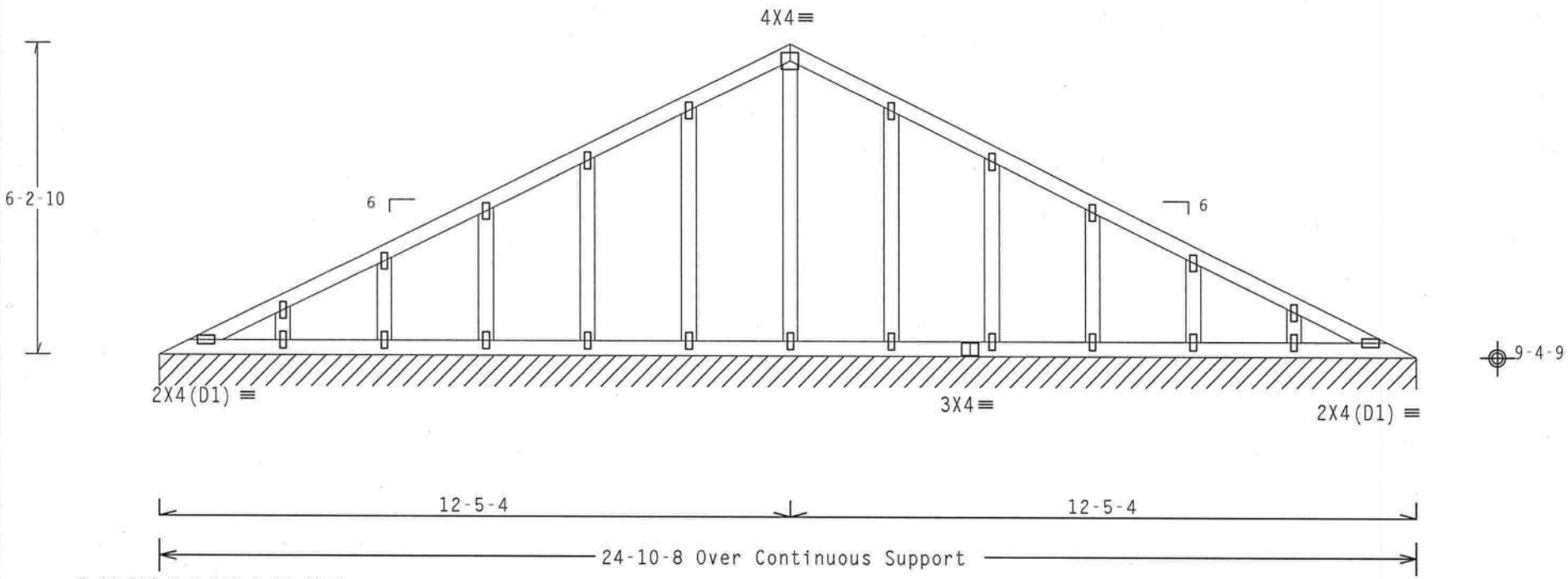

Note: All Plates Are 1.5X4 Except As Shown.

Design Crit: TPI-2002(STD)/FBC

PLT TYP. Wave Cq/RT=1.00(1.25)/10(0) 7.24.1230 17 QTY:1 FL/-/4/-/-/R/- Scale =.3125"/Ft.

ALPINE

ITW Building Components Group, Inc.
Haines City, FL 33844
FL Certificate of Authorization # 667

WARNING TRUSSES REQUIRE EXTREME CARE IN FABRICATION, HANDLING, SHIPPING, INSTALLING AND BRACING. REFER TO BCSI (BUILDING COMPONENT SAFETY INFORMATION), PUBLISHED BY TPI (TRUSS PLATE INSTITUTE, 218 NORTH LEE STREET, SUITE 312, ALEXANDRIA, VA, 22314) AND WTCA (WOOD TRUSS COUNCIL OF AMERICA, 6300 ENTERPRISE LANE, MADISON, WI 53719) FOR SAFETY PRACTICES PRIOR TO PERFORMING THESE FUNCTIONS. UNLESS OTHERWISE INDICATED TOP CHORD SHALL HAVE PROPERLY ATTACHED STRUCTURAL PANELS AND BOTTOM CHORD SHALL HAVE A PROPERLY ATTACHED RIGID CEILING.

IMPORTANTFURNISH A COPY OF THIS DESIGN TO THE INSTALLATION CONTRACTOR. ITW BCG, INC. SHALL NOT BE RESPONSIBLE FOR ANY DEVIATION FROM THIS DESIGN; ANY FAILURE TO BUILD THE TRUSS IN COMFORMANCE WITH TPI; OR FABRICATING, HANDLING, SHIPPING, INSTALLING & BRACING OF TRUSSES.
DESIGN CONFORMS WITH APPLICABLE PROVISIONS OF NDS (NATIONAL DESIGN SPEC. BY AF&PA) AND TPI. ITW BCG CONNECTOR PLATES ARE MADE OF 20/18/16GA (W,H/SS/K) ASTM A653 GRADE 40/60 (W, K/H,SS) GALV. STEEL. APPLY PLATES TO EACH FACE OF TRUSS AND, UNLESS OTHERWISE LOCATED ON THIS DESIGN, POSITION PER DRAWINGS 160A-Z. ANY INSPECTION OF PLATES FOLLOWED BY (1) SHALL BE PER ANNEX A3 OF TPI1-2002 SEC.3. A SEAL ON THIS DRAWING INDICATES ACCEPTANCE OF PROFESSIONAL ENGINEERING RESPONSIBILITY SOLELY FOR THE TRUSS COMPONENT DESIGN SHOWN. THE SUITABILITY AND USE OF THIS COMPONENT FOR ANY BUILDING IS THE RESPONSIBILITY OF THE BUILDING DESIGNER PER ANSI/TPI 1 SEC. 2.

JAMES F. COLLINS JR. LICENSE No. 52212 STATE OF FLORIDA PROFESSIONAL ENGINEER
Aug 29, 2007

TC LL	20.0 PSF	REF	R8228- 75894
TC DL	10.0 PSF	DATE	08/29/07
BC DL	10.0 PSF	DRW	HCUSR8228 07241027
BC LL	0.0 PSF	HC-ENG	TCE/AP *
TOT.LD.	40.0 PSF	SEQN-	41329
DUR.FAC.	1.25	FROM	AH
SPACING	24.0"	JREF-	1TAA8228Z01

Top chord 2x4 SP #2 Dense
Bot chord 2x4 SP #2 Dense
Webs 2x4 SP #3

Deflection meets L/360 live and L/240 total load. Creep increase factor for dead load is 1.50.

110 mph wind, 15.00 ft mean hgt, ASCE 7-02, CLOSED bldg, not located within 4.50 ft from roof edge, CAT II, EXP B, wind TC DL=5.0 psf, wind BC DL=5.0 psf. Iw=1.00 GCpi(+/-)=0.18

Wind reactions based on MWFRS pressures.

See DWG VALTRUSS0207 for valley details.

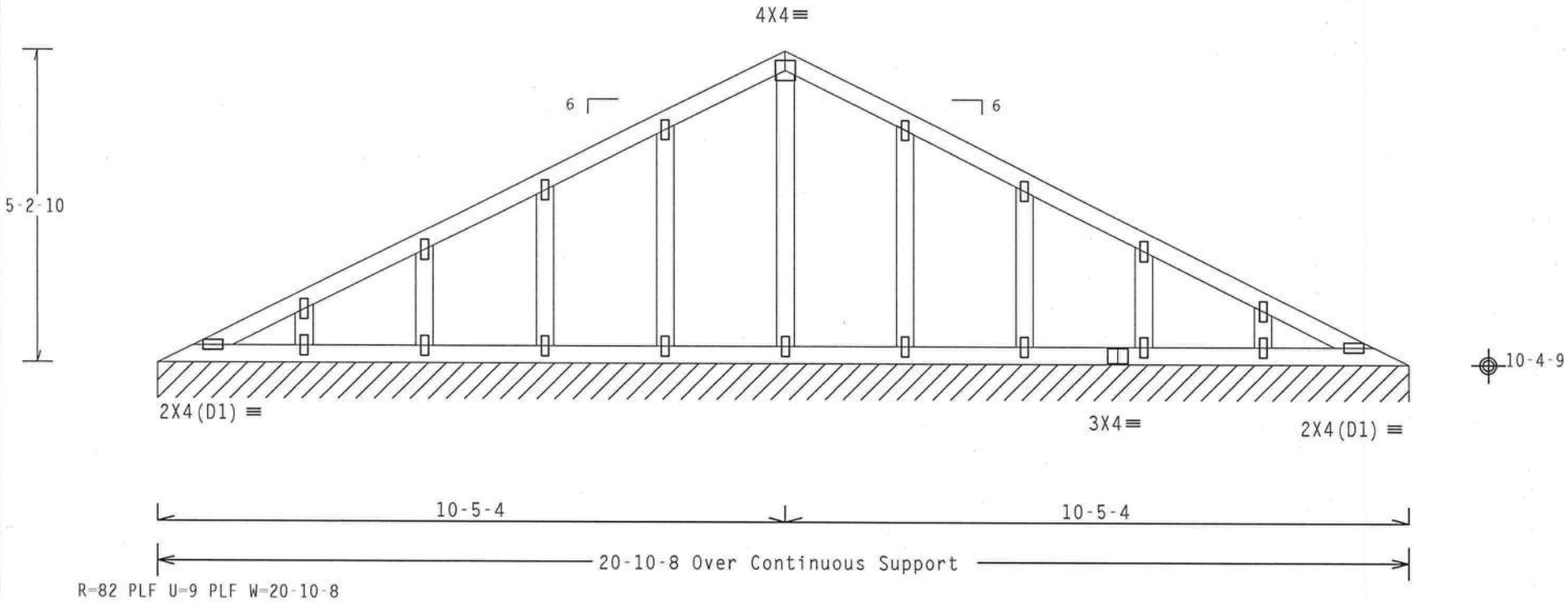

Note: All Plates Are 1.5X4 Except As Shown.

Design Crit: TPI-2002(STD)/FBC

PLT TYP. Wave Cq/RT=1.00(1.25)/10(0) 7.24.1230.7 QTY:1 FL/-/4/-/-/R/- Scale =.375"/Ft.

ALPINE

ITW Building Components Group, Inc.
Haines City, FL 33844
FL Certificate of Authorization #-567

WARNING TRUSSES REQUIRE EXTREME CARE IN FABRICATION, HANDLING, SHIPPING, INSTALLING AND BRACING. REFER TO BCSI (BUILDING COMPONENT SAFETY INFORMATION), PUBLISHED BY TPI (TRUSS PLATE INSTITUTE, 218 NORTH LEE STREET, SUITE 312, ALEXANDRIA, VA, 22314) AND WTCA (WOOD TRUSS COUNCIL OF AMERICA, 6300 ENTERPRISE LANE, MADISON, WI 53719) FOR SAFETY PRACTICES PRIOR TO PERFORMING THESE FUNCTIONS. UNLESS OTHERWISE INDICATED TOP CHORD SHALL HAVE PROPERLY ATTACHED STRUCTURAL PANELS AND BOTTOM CHORD SHALL HAVE A PROPERLY ATTACHED RIGID CEILING.

IMPORTANTFURNISH A COPY OF THIS DESIGN TO THE INSTALLATION CONTRACTOR. ITW BCG, INC. SHALL NOT BE RESPONSIBLE FOR ANY DEVIATION FROM THIS DESIGN; ANY FAILURE TO BUILD THE TRUSS IN COMFORMANCE WITH TPI; OR FABRICATING, HANDLING, SHIPPING, INSTALLING & BRACING OF TRUSSES.
DESIGN CONFORMS WITH APPLICABLE PROVISIONS OF NDS (NATIONAL DESIGN SPEC. BY AF&PA) AND TPI. ITW BCG CONNECTOR PLATES ARE MADE OF 20/18/16GA (W,H/SS/K) ASTM A653 GRADE 40/60 (W, K/H,SS) GALV. STEEL. APPLY PLATES TO EACH FACE OF TRUSS AND, UNLESS OTHERWISE LOCATED ON THIS DESIGN, POSITION PER DRAWINGS 160A-Z. ANY INSPECTION OF PLATES FOLLOWED BY (1) SHALL BE PER ANNEX A3 OF TPI1-2002 SEC.3. A SEAL ON THIS DRAWING INDICATES ACCEPTANCE OF PROFESSIONAL ENGINEERING RESPONSIBILITY SOLELY FOR THE TRUSS COMPONENT DESIGN SHOWN. THE SUITABILITY AND USE OF THIS COMPONENT FOR ANY BUILDING IS THE RESPONSIBILITY OF THE BUILDING DESIGNER PER ANSI/TPI 1 SEC. 2.

JAMES F. COLLINS, JR. LICENSED No. 52212 STATE OF FLORIDA PROFESSIONAL ENGINEER
Aug 29, 07

TC LL	20.0 PSF	REF R8228- 75895
TC DL	10.0 PSF	DATE 08/29/07
BC DL	10.0 PSF	DRW HCUSR8228 07241028
BC LL	0.0 PSF	HC-ENG TCE/AP *
TOT.LD.	40.0 PSF	SEQN- 41334
DUR.FAC.	1.25	FROM AH
SPACING	24.0"	JREF- 1TAA8228Z01

(7-256--OWNER BUILDER Lee Blatter -- 965-7931 , ** - V4)

THIS DWG PREPARED FROM COMPUTER INPUT (LOADS & DIMENSIONS) SUBMITTED BY TRUSS MFR.

Top chord 2x4 SP #2 Dense
Bot chord 2x4 SP #2 Dense
Webs 2x4 SP #3

Deflection meets L/360 live and L/240 total load. Creep increase factor for dead load is 1.50.

110 mph wind, 15.00 ft mean hgt, ASCE 7-02, CLOSED bldg, not located within 4.50 ft from roof edge, CAT II, EXP B, wind TC DL=5.0 psf, wind BC DL=5.0 psf. Iw=1.00 GCpi(+/-)=0.18

Wind reactions based on MWFRS pressures.

See DWG VALTRUSS0207 for valley details.

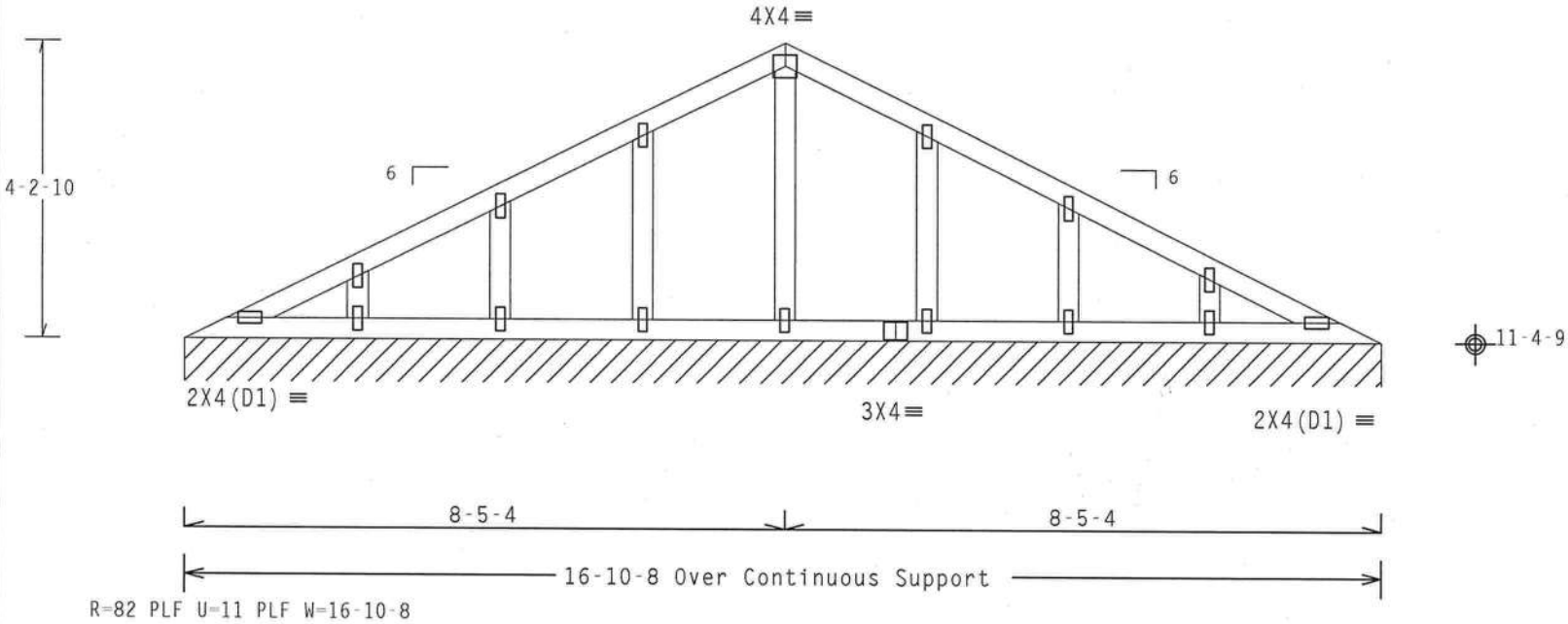

Note: All Plates Are 1.5X4 Except As Shown.

Design Crit: TPI-2002(STD)/FBC

PLT TYP. Wave

Cq/RT=1.00(1.25)/10(0) 7.24.1230 17 QTY:1 FL/-/4/-/-/R/- Scale =.375"/Ft.

ALPINE

ITW Building Components Group, Inc.
Haines City, FL 33844
FL Certificate of Authorization # 567

WARNING TRUSSES REQUIRE EXTREME CARE IN FABRICATION, HANDLING, SHIPPING, INSTALLING AND BRACING. REFER TO BCSI (BUILDING COMPONENT SAFETY INFORMATION), PUBLISHED BY TPI (TRUSS PLATE INSTITUTE, 218 NORTH LEE STREET, SUITE 312, ALEXANDRIA, VA, 22314) AND WTCA (WOOD TRUSS COUNCIL OF AMERICA, 6300 ENTERPRISE LANE, MADISON, WI 53719) FOR SAFETY PRACTICES PRIOR TO PERFORMING THESE FUNCTIONS. UNLESS OTHERWISE INDICATED TOP CHORD SHALL HAVE PROPERLY ATTACHED STRUCTURAL PANELS AND BOTTOM CHORD SHALL HAVE A PROPERLY ATTACHED RIGID CEILING.

IMPORTANT FURNISH A COPY OF THIS DESIGN TO THE INSTALLATION CONTRACTOR. ITW BCG, INC. SHALL NOT BE RESPONSIBLE FOR ANY DEVIATION FROM THIS DESIGN; ANY FAILURE TO BUILD THE TRUSS IN COMFORMANCE WITH TPI; OR FABRICATING, HANDLING, SHIPPING, INSTALLING & BRACING OF TRUSSES.
DESIGN CONFORMS WITH APPLICABLE PROVISIONS OF NDS (NATIONAL DESIGN SPEC. BY AF&PA) AND TPI. ITW BCG CONNECTOR PLATES ARE MADE OF 20/18/16GA (W,H/SS/K) ASTM A653 GRADE 40/60 (H, K/H,SS) GALV. STEEL. APPLY PLATES TO EACH FACE OF TRUSS AND, UNLESS OTHERWISE LOCATED ON THIS DESIGN, POSITION PER DRAWINGS 160A-Z. ANY INSPECTION OF PLATES FOLLOWED BY (1) SHALL BE PER ANNEX A3 OF TPI1-2002 SEC.3. A SEAL ON THIS DRAWING INDICATES ACCEPTANCE OF PROFESSIONAL ENGINEERING RESPONSIBILITY SOLELY FOR THE TRUSS COMPONENT DESIGN SHOWN. THE SUITABILITY AND USE OF THIS COMPONENT FOR ANY BUILDING IS THE RESPONSIBILITY OF THE BUILDING DESIGNER PER ANSI/TPI 1 SEC. 2.

JAMES F. COLLINS JR. LICENSE No 52212 STATE OF FLORIDA PROFESSIONAL ENGINEER

Aug

TC LL	20.0 PSF	REF	R8228- 75896
TC DL	10.0 PSF	DATE	08/29/07
BC DL	10.0 PSF	DRW	HCUSR8228 07241029
BC LL	0.0 PSF	HC-ENG	TCE/AP *
TOT.LD.	40.0 PSF	SEQN-	41340
DUR.FAC.	1.25	FROM	AH
SPACING	24.0"	JREF-	1TAA8228Z01

CLB WEB BRACE SUBSTITUTION

THIS DETAIL IS TO BE USED WHEN CONTINUOUS LATERAL BRACING (CLB) IS SPECIFIED ON AN ALPINE TRUSS DESIGN BUT AN ALTERNATIVE WEB BRACING METHOD IS DESIRED.

NOTES:

THIS DETAIL IS ONLY APPLICABLE FOR CHANGING THE SPECIFIED CLB SHOWN ON SINGLE PLY SEALED DESIGNS TO T-BRACING OR SCAB BRACING.

ALTERNATIVE BRACING SPECIFIED IN CHART BELOW MAY BE CONSERVATIVE. FOR MINIMUM ALTERNATIVE BRACING, RE-RUN DESIGN WITH APPROPRIATE BRACING.

WEB MEMBER SIZE	SPECIFIED CLB BRACING	ALTERNATIVE BRACING T OR L-BRACE	ALTERNATIVE BRACING SCAB BRACE
2X3 OR 2X4	1 ROW	2X4	1-2X4
2X3 OR 2X4	2 ROWS	2X6	2-2X4
2X6	1 ROW	2X4	1-2X6
2X6	2 ROWS	2X6	2-2X4(*)
2X8	1 ROW	2X6	1-2X8
2X8	2 ROWS	2X6	2-2X6(*)

T-BRACE, L-BRACE AND SCAB BRACE TO BE SAME SPECIES AND GRADE OR BETTER THAN WEB MEMBER UNLESS SPECIFIED OTHERWISE ON ENGINEER'S SEALED DESIGN.

(*) CENTER SCAB ON WIDE FACE OF WEB. APPLY (1) SCAB TO EACH FACE OF WEB.

T-BRACING OR L-BRACING:

APPLY TO EITHER SIDE OF WEB NARROW FACE. ATTACH WITH 10d BOX OR GUN (0.128"x 3.",MIN) NAILS. AT 6" O.C. BRACE IS A MINIMUM 80% OF WEB MEMBER LENGTH

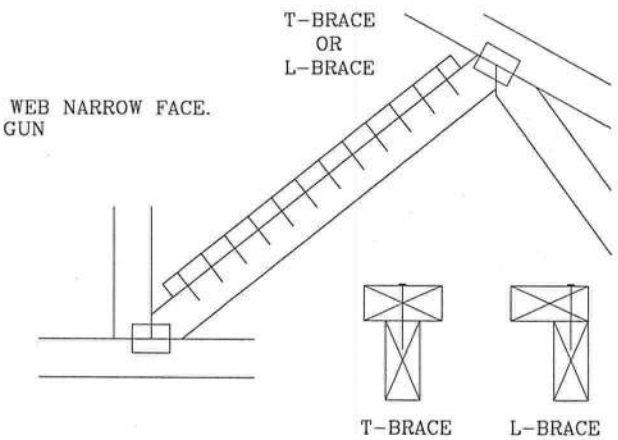

SCAB BRACING:

APPLY SCAB(S) TO WIDE FACE OF WEB. NO MORE THAN (1) SCAB PER FACE. ATTACH WITH 10d BOX OR GUN (0.128"x 3.",MIN) NAILS. AT 6" O.C. BRACE IS A MINIMUM 80% OF WEB MEMBER LENGTH

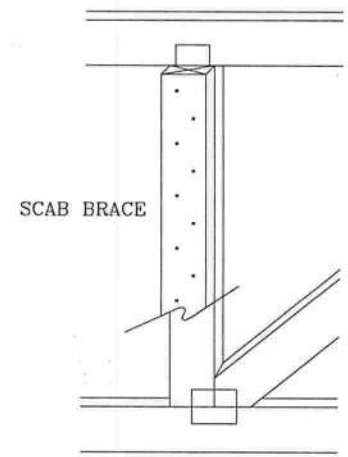

THIS DRAWING REPLACES DRAWING 579,640

ALPINE

ITW BUILDING COMPONENTS GROUP, INC.
POMPANO BEACH, FLORIDA

WARNING TRUSSES REQUIRE EXTREME CARE IN FABRICATING, HANDLING, SHIPPING, INSTALLING AND BRACING. REFER TO BCSI (BUILDING COMPONENT SAFETY INFORMATION), PUBLISHED BY TPI (TRUSS PLATE INSTITUTE, 218 NORTH LEE STR., SUITE 312, ALEXANDRIA, VA. 22314) AND WTCA (WOOD TRUSS COUNCIL OF AMERICA, 6300 ENTERPRISE LN, MADISON, WI 53719) FOR SAFETY PRACTICES PRIOR TO PERFORMING THESE FUNCTIONS. UNLESS OTHERWISE INDICATED, TOP CHORD SHALL HAVE PROPERLY ATTACHED STRUCTURAL PANELS AND BOTTOM CHORD SHALL HAVE A PROPERLY ATTACHED RIGID CEILING.

IMPORTANT FURNISH COPY OF THIS DESIGN TO INSTALLATION CONTRACTOR. ITW BCG, INC., SHALL NOT BE RESPONSIBLE FOR ANY DEVIATION FROM THIS DESIGN; ANY FAILURE TO BUILD THE TRUSS IN CONFORMANCE WITH TPI; OR FABRICATING, HANDLING, SHIPPING, INSTALLING & BRACING OF TRUSSES DESIGN CONFORMS WITH APPLICABLE PROVISIONS OF NDS (NATIONAL DESIGN SPEC, BY AF&PA) AND TPI. ITW, BCG CONNECTOR PLATES ARE MADE OF 20/18/16GA (W,H/SS/K) ASTM A653 GRADE 40/60 (W,K/H,SS) GALV. STEEL. APPLY PLATES TO EACH FACE OF TRUSS AND, UNLESS OTHERWISE LOCATED ON THIS DESIGN, POSITION PER DRAWINGS 160A-Z. ANY INSPECTION OF PLATES FOLLOWED BY (I) SHALL BE PER ANNEX A3 OF TPI 1-2002 SEC. 3. A SEAL ON THIS DRAWING INDICATES ACCEPTANCE OF PROFESSIONAL ENGINEERING RESPONSIBILITY SOLELY FOR THE TRUSS COMPONENT DESIGN SHOWN. THE SUITABILITY AND USE OF THIS COMPONENT FOR ANY BUILDING IS THE RESPONSIBILITY OF THE BUILDING DESIGNER, PER ANSI/TPI 1 SEC. 2.

JAMES K. COLLINS, JR. LICENSE No. 52212 STATE OF FLORIDA PROFESSIONAL ENGINEER
AUG 28 '07

TC LL	PSF	REF	CLB SUBST.
TC DL	PSF	DATE	2/23/07
BC DL	PSF	DRWG	BRCLBSUB0207
BC LL	PSF	-ENG	MLH/KAR
TOT. LD.	PSF		
DUR. FAC.			
SPACING			

ASCE 7-02: 110 MPH WIND SPEED, 15' MEAN HEIGHT, ENCLOSED, I = 1.00, EXPOSURE C

MAX GABLE VERTICAL LENGTH

2X4 GABLE VERTICAL SPACING	SPECIES	BRACE GRADE	NO BRACES	(1) 1X4 "L" BRACE * GROUP A	(1) 1X4 "L" BRACE * GROUP B	(1) 2X4 "L" BRACE * GROUP A	(1) 2X4 "L" BRACE * GROUP B	(2) 2X4 "L" BRACE ** GROUP A	(2) 2X4 "L" BRACE ** GROUP B	(1) 2X6 "L" BRACE * GROUP A	(1) 2X6 "L" BRACE * GROUP B	(2) 2X6 "L" BRACE ** GROUP A	(2) 2X6 "L" BRACE ** GROUP B
24" O.C.	SPF HF	#1 / #2	3' 10"	6' 8"	6' 10"	7' 11"	8' 1"	9' 5"	9' 8"	12' 5"	12' 9"	14' 0"	14' 0"
		#3	3' 9"	6' 0"	6' 0"	7' 11"	7' 11"	9' 5"	9' 5"	12' 4"	12' 4"	14' 0"	14' 0"
		STUD	3' 9"	6' 0"	6' 0"	7' 11"	7' 11"	9' 5"	9' 5"	12' 3"	12' 3"	14' 0"	14' 0"
		STANDARD	3' 9"	5' 2"	5' 2"	6' 9"	6' 9"	9' 1"	9' 1"	10' 7"	10' 7"	14' 0"	14' 0"
	SP DFL	#1	4' 3"	6' 8"	7' 2"	7' 11"	8' 6"	9' 5"	10' 2"	12' 5"	13' 5"	14' 0"	14' 0"
		#2	4' 2"	6' 8"	7' 2"	7' 11"	8' 6"	9' 5"	10' 2"	12' 5"	13' 5"	14' 0"	14' 0"
		#3	4' 0"	6' 2"	6' 2"	7' 11"	8' 1"	9' 5"	9' 11"	12' 5"	12' 8"	14' 0"	14' 0"
		STUD	4' 0"	6' 1"	6' 1"	7' 11"	8' 0"	9' 5"	9' 11"	12' 5"	12' 6"	14' 0"	14' 0"
		STANDARD	3' 10"	5' 3"	5' 3"	6' 11"	6' 11"	9' 4"	9' 4"	10' 10"	10' 10"	14' 0"	14' 0"
16" O.C.	SPF HF	#1 / #2	4' 5"	7' 8"	7' 10"	9' 1"	9' 4"	10' 10"	11' 1"	14' 0"	14' 0"	14' 0"	14' 0"
		#3	4' 4"	7' 4"	7' 4"	9' 1"	9' 1"	10' 10"	10' 10"	14' 0"	14' 0"	14' 0"	14' 0"
		STUD	4' 4"	7' 4"	7' 4"	9' 1"	9' 1"	10' 10"	10' 10"	14' 0"	14' 0"	14' 0"	14' 0"
		STANDARD	4' 4"	6' 4"	6' 4"	8' 4"	8' 4"	10' 10"	10' 10"	12' 11"	12' 11"	14' 0"	14' 0"
	SP DFL	#1	4' 10"	7' 8"	8' 3"	9' 1"	9' 9"	10' 10"	11' 8"	14' 0"	14' 0"	14' 0"	14' 0"
		#2	4' 9"	7' 8"	8' 3"	9' 1"	9' 9"	10' 10"	11' 8"	14' 0"	14' 0"	14' 0"	14' 0"
		#3	4' 6"	7' 7"	7' 7"	9' 1"	9' 6"	10' 10"	11' 4"	14' 0"	14' 0"	14' 0"	14' 0"
		STUD	4' 6"	7' 6"	7' 6"	9' 1"	9' 6"	10' 10"	11' 4"	14' 0"	14' 0"	14' 0"	14' 0"
		STANDARD	4' 5"	6' 5"	6' 5"	8' 6"	8' 6"	10' 10"	11' 1"	13' 3"	13' 3"	14' 0"	14' 0"
12" O.C.	SPF HF	#1 / #2	4' 11"	8' 5"	8' 8"	10' 0"	10' 3"	11' 11"	12' 3"	14' 0"	14' 0"	14' 0"	14' 0"
		#3	4' 9"	8' 5"	8' 5"	10' 0"	10' 0"	11' 11"	11' 11"	14' 0"	14' 0"	14' 0"	14' 0"
		STUD	4' 9"	8' 5"	8' 5"	10' 0"	10' 0"	11' 11"	11' 11"	14' 0"	14' 0"	14' 0"	14' 0"
		STANDARD	4' 9"	7' 3"	7' 3"	9' 7"	9' 7"	11' 11"	11' 11"	14' 0"	14' 0"	14' 0"	14' 0"
	SP DFL	#1	5' 4"	8' 5"	9' 1"	10' 0"	10' 9"	11' 11"	12' 10"	14' 0"	14' 0"	14' 0"	14' 0"
		#2	5' 3"	8' 5"	9' 1"	10' 0"	10' 9"	11' 11"	12' 10"	14' 0"	14' 0"	14' 0"	14' 0"
		#3	5' 0"	8' 5"	8' 5"	10' 0"	10' 6"	11' 11"	12' 6"	14' 0"	14' 0"	14' 0"	14' 0"
		STUD	5' 0"	8' 5"	8' 7"	10' 0"	10' 6"	11' 11"	12' 6"	14' 0"	14' 0"	14' 0"	14' 0"
		STANDARD	4' 11"	7' 5"	7' 5"	9' 10"	9' 10"	11' 11"	12' 3"	14' 0"	14' 0"	14' 0"	14' 0"

BRACING GROUP SPECIES AND GRADES:

GROUP A:

SPRUCE-PINE-FIR

#1 / #2	STANDARD
#3	STUD

HEM-FIR

#2	STUD
#3	STANDARD

DOUGLAS FIR-LARCH

#3
STUD
STANDARD

SOUTHERN PINE

#3
STUD
STANDARD

GROUP B:

HEM-FIR

#1 & BTR
#1

SOUTHERN PINE

#1
#2

DOUGLAS FIR-LARCH

#1
#2

GABLE TRUSS DETAIL NOTES:

LIVE LOAD DEFLECTION CRITERIA IS L/240.

PROVIDE UPLIFT CONNECTIONS FOR 80 PLF OVER CONTINUOUS BEARING (5 PSF TC DEAD LOAD).

GABLE END SUPPORTS LOAD FROM 4' 0" OUTLOOKERS WITH 2' 0" OVERHANG, OR 12" PLYWOOD OVERHANG.

ATTACH EACH "L" BRACE WITH 10d NAILS.
* FOR (1) "L" BRACE: SPACE NAILS AT 2" O.C. IN 18" END ZONES AND 4" O.C. BETWEEN ZONES.
** FOR (2) "L" BRACES: SPACE NAILS AT 3" O.C. IN 18" END ZONES AND 6" O.C. BETWEEN ZONES.

"L" BRACING MUST BE A MINIMUM OF 80% OF WEB MEMBER LENGTH.

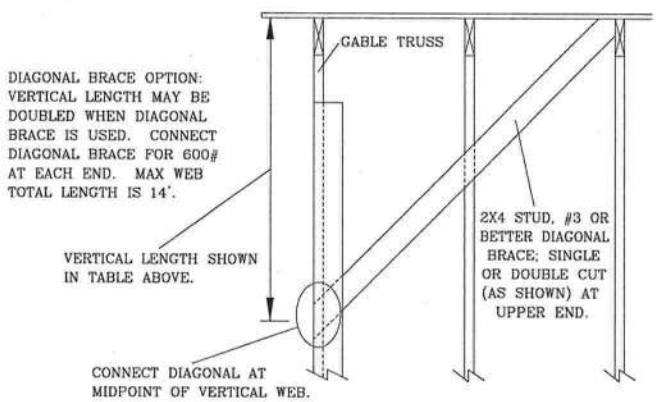

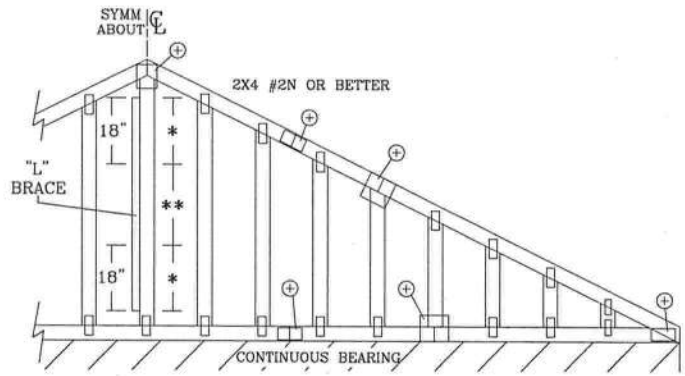

REFER TO CHART ABOVE FOR MAX GABLE VERTICAL LENGTH.

GABLE VERTICAL PLATE SIZES

VERTICAL LENGTH	NO SPLICE
LESS THAN 4' 0"	1X4 OR 2X3
GREATER THAN 4' 0", BUT LESS THAN 11' 6"	2X4
GREATER THAN 11' 6"	2.5X4

+ REFER TO COMMON TRUSS DESIGN FOR PEAK, SPLICE, AND HEEL PLATES.

ALPINE

ITW BUILDING COMPONENTS GROUP, INC.
POMPANO BEACH, FLORIDA

WARNING TRUSSES REQUIRE EXTREME CARE IN FABRICATING, HANDLING, SHIPPING, INSTALLING AND BRACING. REFER TO BCSI (BUILDING COMPONENT SAFETY INFORMATION), PUBLISHED BY TPI (TRUSS PLATE INSTITUTE, 218 NORTH LEE STR., SUITE 312, ALEXANDRIA, VA. 22314) AND WTCA (WOOD TRUSS COUNCIL OF AMERICA, 6300 ENTERPRISE LN, MADISON, WI 53719) FOR SAFETY PRACTICES PRIOR TO PERFORMING THESE FUNCTIONS. UNLESS OTHERWISE INDICATED, TOP CHORD SHALL HAVE PROPERLY ATTACHED STRUCTURAL PANELS AND BOTTOM CHORD SHALL HAVE A PROPERLY ATTACHED RIGID CEILING.

IMPORTANT FURNISH COPY OF THIS DESIGN TO INSTALLATION CONTRACTOR. ITW BCG, INC., SHALL NOT BE RESPONSIBLE FOR ANY DEVIATION FROM THIS DESIGN; ANY FAILURE TO BUILD THE TRUSS IN CONFORMANCE WITH TPI; OR FABRICATING, HANDLING, SHIPPING, INSTALLING & BRACING OF TRUSSES. DESIGN CONFORMS WITH APPLICABLE PROVISIONS OF NDS (NATIONAL DESIGN SPEC, BY AF&PA) AND TPI. ITW, BCG CONNECTOR PLATES ARE MADE OF 20/18/16GA (W,H/SS/K) ASTM A653 GRADE 40/60 (W,K/H,SS) GALV. STEEL. APPLY PLATES TO EACH FACE OF TRUSS AND, UNLESS OTHERWISE LOCATED ON THIS DESIGN, POSITION PER DRAWINGS 160A-Z. ANY INSPECTION OF PLATES FOLLOWED BY (I) SHALL BE PER ANNEX A3 OF TPI 1-2002 SEC. 3. A SEAL ON THIS DRAWING INDICATES ACCEPTANCE OF PROFESSIONAL ENGINEERING RESPONSIBILITY SOLELY FOR THE TRUSS COMPONENT DESIGN SHOWN. THE SUITABILITY AND USE OF THIS COMPONENT FOR ANY BUILDING IS THE RESPONSIBILITY OF THE BUILDING DESIGNER, PER ANSI/TPI 1 SEC. 2.

JAMES F. COLLINS, JR. LICENSE No. 52212 STATE OF FLORIDA PROFESSIONAL ENGINEER
Aug 29 07

MAX. TOT. LD. 60 PSF

MAX. SPACING 24.0"

REF	ASCE7-02-GAB11015
DATE	2/23/07
DRWG	A11015EE0207
-ENG	

GABLE DETAIL
FOR LET-IN VERTICALS

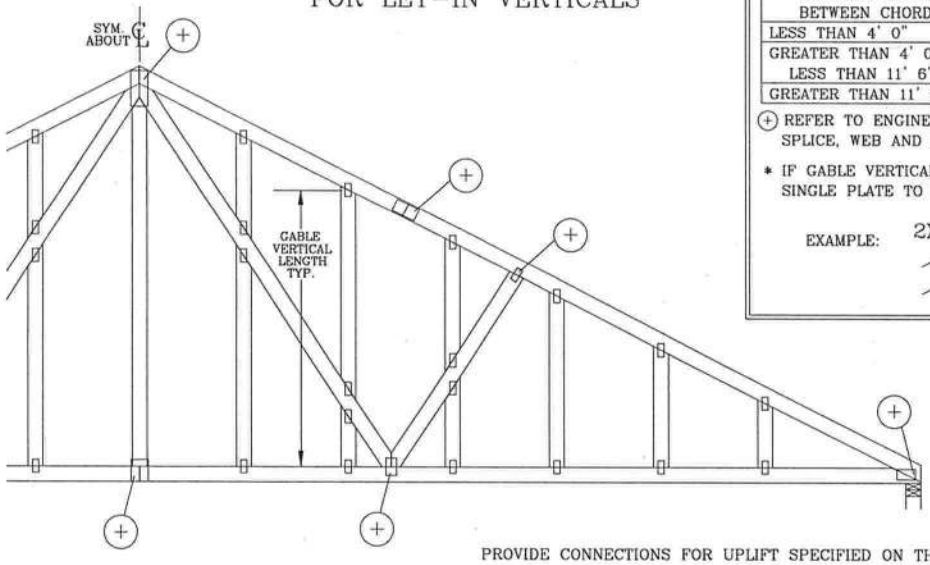

GABLE VERTICAL PLATE SIZES		
VERTICAL LENGTH BETWEEN CHORDS	PLATE SIZE	IF PLATES OVERLAP*
LESS THAN 4' 0"	1X4 OR 2X3	2X8
GREATER THAN 4' 0", BUT LESS THAN 11' 6"	2X4	2X8
GREATER THAN 11' 6"	2.5X4	2.5X8

(+) REFER TO ENGINEERED TRUSS DESIGN FOR PEAK, SPLICE, WEB AND HEEL PLATES.

* IF GABLE VERTICAL PLATES OVERLAP, USE A SINGLE PLATE TO SPAN THE WEB.

EXAMPLE:

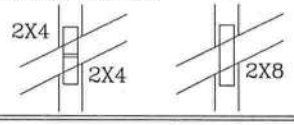

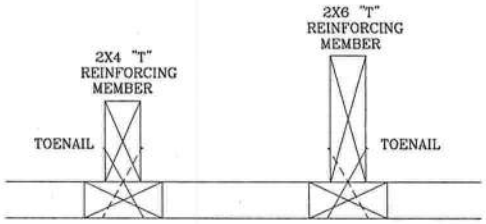

TO CONVERT FROM "L" TO "T" REINFORCING MEMBERS, MULTIPLY "T" FACTOR BY LENGTH (BASED ON GABLE VERTICAL SPECIES, GRADE AND SPACING) FOR (1) 2X4 "L" BRACE, GROUP A, OBTAINED FROM THE APPROPRIATE ALPINE GABLE DETAIL FOR ASCE OR SBCCI WIND LOAD.

MAXIMUM ALLOWABLE "T" REINFORCED GABLE VERTICAL LENGTH IS 14' FROM TOP TO BOTTOM CHORD.

WEB LENGTH INCREASE W/ "T" BRACE

WIND SPEED AND MRH	"T" REINF. MBR. SIZE	SBCCI	ASCE
110 MPH	2x4	10 %	10 %
15 FT	2x6	40 %	50 %
110 MPH	2x4	10 %	10 %
30 FT	2x6	50 %	50 %
100 MPH	2x4	10 %	10 %
15 FT	2x6	30 %	50 %
100 MPH	2x4	10 %	10 %
30 FT	2x6	40 %	40 %
90 MPH	2x4	20 %	10 %
15 FT	2x6	20 %	40 %
90 MPH	2x4	10 %	10 %
30 FT	2x6	30 %	50 %
80 MPH	2x4	10 %	20 %
15 FT	2x6	10 %	30 %
80 MPH	2x4	20 %	10 %
30 FT	2x6	20 %	40 %
70 MPH	2x4	0 %	20 %
15 FT	2x6	0 %	20 %
70 MPH	2x4	10 %	20 %
30 FT	2x6	10 %	30 %

EXAMPLE:
ASCE WIND SPEED = 100 MPH
MEAN ROOF HEIGHT = 30 FT
GABLE VERTICAL = 24" O.C. SP #3
"T" REINFORCING MEMBER SIZE = 2X4
"T" BRACE INCREASE (FROM ABOVE) = 10% = 1.10
(1) 2X4 "L" BRACE LENGTH = 6' 7"
MAXIMUM "T" REINFORCED GABLE VERTICAL LENGTH
1.10 x 6' 7" = 7' 3"

PROVIDE CONNECTIONS FOR UPLIFT SPECIFIED ON THE ENGINEERED TRUSS DESIGN.

ATTACH EACH "T" REINFORCING MEMBER WITH
HAND DRIVEN NAILS:
10d COMMON (0.148"X 3.",MIN) TOENAILS AT 4" O.C. PLUS
(4) 16d COMMON (0.162" X 3.5",MIN) TOENAILS IN TOP AND BOTTOM CHORD.

GUN DRIVEN NAILS:
8d COMMON (0.131"X 2.5",MIN) TOENAILS AT 4" O.C. PLUS
(4) TOENAILS IN TOP AND BOTTOM CHORD.

THIS DETAIL TO BE USED WITH THE APPROPRIATE ALPINE GABLE DETAIL FOR ASCE OR SBCCI WIND LOAD.

ASCE 7-93 GABLE DETAIL DRAWINGS
A11015EN0207, A10015EN0207, A09015EN0207, A08015EN0207, A07015EN0207, A11030EN0207, A10030EN0207, A09030EN0207, A08030EN0207, A07030EN0207

ASCE 7-98 GABLE DETAIL DRAWINGS
A13015EC0207, A12015EC0207, A11015EC0207, A10015EC0207, A08515EC0207, A13030EC0207, A12030EC0207, A11030EC0207, A10030EC0207, A08530EC0207

ASCE 7-02 GABLE DETAIL DRAWINGS
A13015EE0207, A12015EE0207, A11015EE0207, A10015EE0207, A08515EE0207, A13030EE0207, A12030EE0207, A11030EE0207, A10030EE0207, A08530EE0207

ASCE 7-05 GABLE DETAIL DRAWINGS
A13015E50207, A12015E50207, A11015E50207, A10015E50207, A08515E50207, A13030E50207, A12030E50207, A11030E50207, A10030E50207, A08530E50207

SEE APPROPRIATE ALPINE GABLE DETAIL (ASCE OR SBCCI WIND LOAD) FOR MAXIMUM UNREINFORCED GABLE VERTICAL LENGTH.

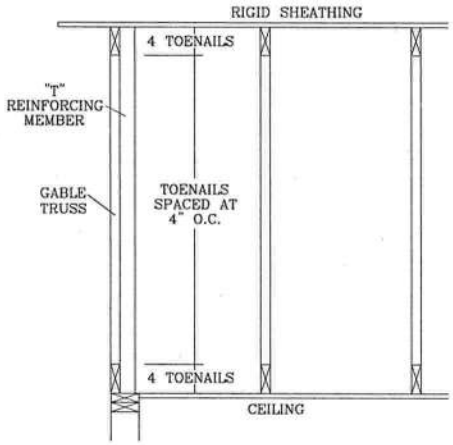

THIS DRAWING REPLACES DRAWINGS GAB98117 876,719 & HC26294035

ALPINE
ITW BUILDING COMPONENTS GROUP, INC.
POMPANO BEACH, FLORIDA

WARNING TRUSSES REQUIRE EXTREME CARE IN FABRICATING, HANDLING, SHIPPING, INSTALLING AND BRACING. REFER TO BCSI (BUILDING COMPONENT SAFETY INFORMATION), PUBLISHED BY TPI (TRUSS PLATE INSTITUTE, 218 NORTH LEE STR., SUITE 312, ALEXANDRIA, VA. 22314) AND WTCA (WOOD TRUSS COUNCIL OF AMERICA, 6300 ENTERPRISE LN, MADISON, WI 53719) FOR SAFETY PRACTICES PRIOR TO PERFORMING THESE FUNCTIONS. UNLESS OTHERWISE INDICATED, TOP CHORD SHALL HAVE PROPERLY ATTACHED STRUCTURAL PANELS AND BOTTOM CHORD SHALL HAVE A PROPERLY ATTACHED RIGID CEILING.

IMPORTANT FURNISH COPY OF THIS DESIGN TO INSTALLATION CONTRACTOR. ITW BCG, INC. SHALL NOT BE RESPONSIBLE FOR ANY DEVIATION FROM THIS DESIGN; ANY FAILURE TO BUILD THE TRUSS IN CONFORMANCE WITH TPI; OR FABRICATING, HANDLING, SHIPPING, INSTALLING & BRACING OF TRUSSES DESIGN CONFORMS WITH APPLICABLE PROVISIONS OF NDS (NATIONAL DESIGN SPEC, BY AF&PA) AND THE ITW, BCG CONNECTOR PLATES ARE MADE OF 20/18/16GA (W,H/SS/K) ASTM A653 GRADE 40/60 (W,K/H,SS) GALV. STEEL. APPLY PLATES TO EACH FACE OF TRUSS AND, UNLESS OTHERWISE LOCATED ON THIS DESIGN, POSITION PER DRAWINGS 160A-Z. ANY INSPECTION OF PLATES FOLLOWED BY (I) SHALL BE PER ANNEX A3 OF TPI 1-2002 SEC. 3. A SEAL ON THIS DRAWING INDICATES ACCEPTANCE OF PROFESSIONAL ENGINEERING RESPONSIBILITY SOLELY FOR THE TRUSS COMPONENT DESIGN SHOWN. THE SUITABILITY AND USE OF THIS COMPONENT FOR ANY BUILDING IS THE RESPONSIBILITY OF THE BUILDING DESIGNER, PER ANSI/TPI 1 SEC. 2.

AUG 29 '07

JAMES F. COLLINS, JR. LICENSE No. 52212 STATE OF FLORIDA PROFESSIONAL ENGINEER

MAX TOT. LD. 60 PSF
DUR. FAC. ANY
MAX SPACING 24.0"

REF	LET-IN VERT
DATE	2/23/07
DRWG	GBLLETIN0207
-ENG	DLJ/KAR

PIGGYBACK DETAIL

100 MPH WIND, 30.00 FT MEAN HGT, ASCE 7-02 OR ASCE 7-05, CLOSED BLGD, LOCATED ANYWHERE IN ROOF, CAT II, EXP C, WIND TC DL=5.0 PSF, WIND BC DL=5.0 PSF.

80 MPH WIND, 30.00 FT MEAN HGT, SBC, ENCLOSED BLDG, LOCATED ANYWHERE IN ROOF WIND TC DL=5.0 PSF, WIND BC DL=5.0 PSF.

100 MPH WIND, 30.00 FT MEAN HGT, ASCE 7-98, CLOSED BLDG, LOCATED ANYWHERE IN ROOF, CAT II, EXP. C, WIND TC DL=5.0 PSF, WIND BC DL=5.0 PSF.

NOTE: TOP CHORDS OF TRUSSES SUPPORTING PIGGYBACK CAP TRUSSES MUST BE ADEQUATLY BRACED BY SHEATHING OR PURLINS. PROVIDE DIAGONAL BRACING OR OTHER SUITABLE ANCHORAGE TO PERMANENTLY RESTRAIN PURLINS.

DETAIL A

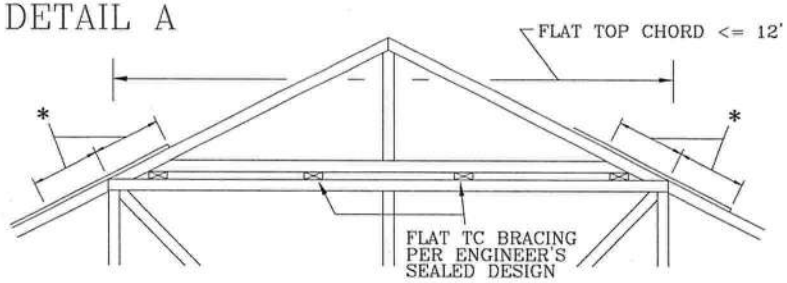

PIGGYBACK CAP TRUSS TOENAILED TO ALL TOP CHORD BRACING WITH (2) 10d COMMON (0.148"x3") NAILS.

* 12" MIN RIGID SHEATHING OVERLAP WITH 8d COMMON (0.131"x2.5") OR GUN NAILS IN OVERLAP ZONE SPACED AT 4" O.C.

DETAIL B

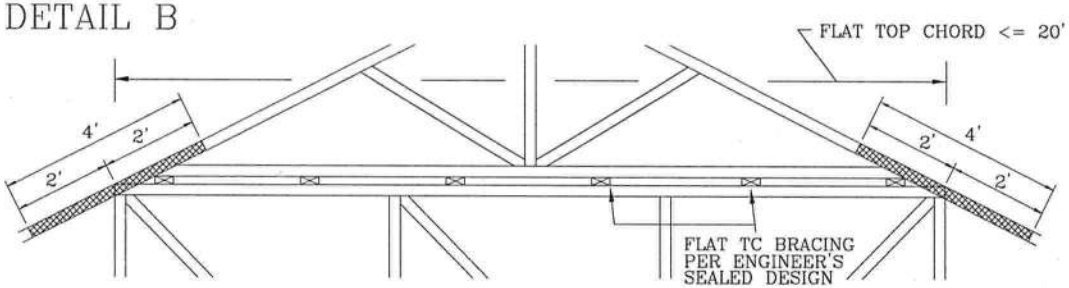

PIGGYBACK CAP TRUSS TOENAILED TO ALL TOP CHORD BRACING WITH (2) 10d COMMON (0.148"X3") NAILS AND SECURED WITH 2X4 #3 GRADE SCAB (1 SIDE ONLY) ATTACHED WITH 10d COMMON NAILS AT 4" O.C.

DETAIL C

CAP TRUSS TOENAILED TO TOP CHORD BRACING AND SECURED WITH 3X8 TRULOX PLATES (EACH FACE) AT EACH END AND AT 1/3 POINTS. CIRCLED NUMBER INDICATES REQUIRED NUMBER OF 0.120" X 1.375" NAILS PER FACE. SEE DRAWING 160TL FOR TRULOX INFORMATION.

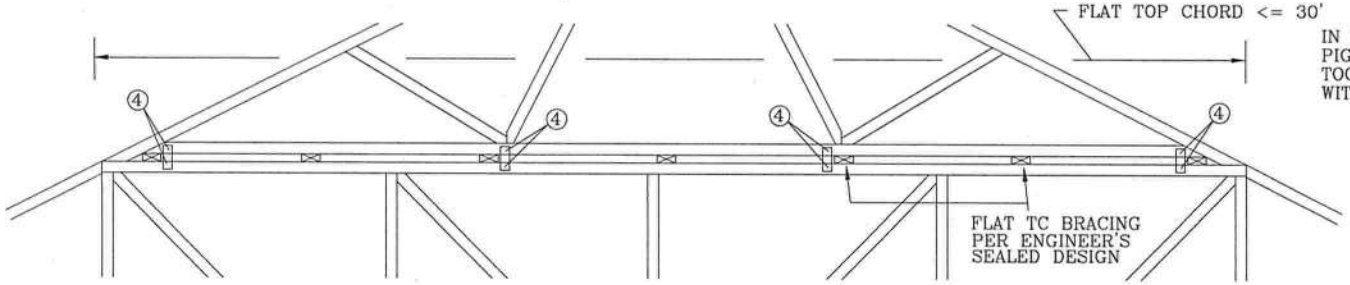

IN LIEU OF TRULOX CONNECTORS, ALPINE 62PB SPECIAL PIGGYBACK CONNECTORS MAY BE USED. SHOP APPLY TOOTHED PORTION, FIELD ATTACH TO MATING TRUSS WITH (4) 0.120" X 0.375" NAILS MINIMUM EACH FACE.

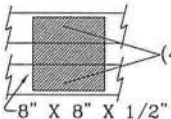

8" X 8" X 1/2" RATED SHEATHING GUSSETS (EACH FACE) MAY BE USED IN LIEU OF TRULOX PLATES, ATTACH WITH (8) 8d COMMON NAILS PER GUSSET, (4) IN CAP BC AND (4) IN BASE TRUSS FLAT TC.

THIS DRAWING REPLACES DRAWINGS 581,670 & 961,860

ALPINE

ITW BUILDING COMPONENTS GROUP, INC.
POMPANO BEACH, FLORIDA

WARNING TRUSSES REQUIRE EXTREME CARE IN FABRICATING, HANDLING, SHIPPING, INSTALLING AND BRACING. REFER TO BCSI (BUILDING COMPONENT SAFETY INFORMATION), PUBLISHED BY TPI (TRUSS PLATE INSTITUTE, 218 NORTH LEE STR., SUITE 312, ALEXANDRIA, VA. 22314) AND WTCA (WOOD TRUSS COUNCIL OF AMERICA, 6300 ENTERPRISE LN, MADISON, WI 53719) FOR SAFETY PRACTICES PRIOR TO PERFORMING THESE FUNCTIONS. UNLESS OTHERWISE INDICATED, TOP CHORD SHALL HAVE PROPERLY ATTACHED STRUCTURAL PANELS AND BOTTOM CHORD SHALL HAVE A PROPERLY ATTACHED RIGID CEILING.

IMPORTANT FURNISH COPY OF THIS DESIGN TO INSTALLATION CONTRACTOR. ITW BCG, INC., SHALL NOT BE RESPONSIBLE FOR ANY DEVIATION FROM THIS DESIGN; ANY FAILURE TO BUILD THE TRUSS IN CONFORMANCE WITH TPI; OR FABRICATING, HANDLING, SHIPPING, INSTALLING & BRACING OF TRUSSES. DESIGN CONFORMS WITH APPLICABLE PROVISIONS OF NDS (NATIONAL DESIGN SPEC, BY AF&PA) AND THE ITW, BCG CONNECTOR PLATES ARE MADE OF 20/18/16GA (W,H/SS/K) ASTM A653 GRADE 40/60 (W,K/H,SS) GALV. STEEL. APPLY PLATES TO EACH FACE OF TRUSS AND, UNLESS OTHERWISE LOCATED ON THIS DESIGN, POSITION PER DRAWINGS 160A-Z. ANY INSPECTION OF PLATES FOLLOWED BY (I) SHALL BE PER ANNEX A3 OF TPI 1-2002 SEC. 3. A SEAL ON THIS DRAWING INDICATES ACCEPTANCE OF PROFESSIONAL ENGINEERING RESPONSIBILITY SOLELY FOR THE TRUSS COMPONENT DESIGN SHOWN. THE SUITABILITY AND USE OF THIS COMPONENT FOR ANY BUILDING IS THE RESPONSIBILITY OF THE BUILDING DESIGNER, PER ANSI/TPI 1 SEC. 2.

AUG 29 '07

JAMES F. COLLINS, JR. LICENSE No. 52212 STATE OF FLORIDA PROFESSIONAL ENGINEER

TC LL	PSF	REF	PIGGYBACK
TC DL	PSF	DATE	2/23/07
BC DL	PSF	DRWG	PIGBACKA0207
BC LL	PSF	-ENG	DLJ/KAR
TOT. LD.	MAX 60 PSF		
DUR. FAC.	1.15		
SPACING	24.0"		

PIGGYBACK DETAIL

TOP CHORD 2X4 #2 OR BETTER
BOT CHORD 2X4 #2 OR BETTER
WEBS 2X4 #3 OR BETTER

REFER TO SEALED DESIGN FOR DASHED PLATES.

SPACE PIGGYBACK VERTICALS AT 4' OC MAX.

TOP AND BOTTOM CHORD SPLICES MUST BE STAGGERED SO THAT ONE SPLICE IS NOT DIRECTLY OVER ANOTHER.

PIGGYBACK BOTTOM CHORD MAY BE OMITTED. ATTACH VERTICAL WEBS TO TRUSS TOP CHORD WITH 1.5X3 PLATE.

ATTACH PURLINS TO TOP OF FLAT TOP CHORD. IF PIGGYBACK IS SOLID LUMBER OR THE BOTTOM CHORD IS OMITTED, PURLINS MAY BE APPLIED BENEATH THE TOP CHORD OF SUPPORTING TRUSS.

REFER TO ENGINEER'S SEALED DESIGN FOR REQUIRED PURLIN SPACING.

THIS DETAIL IS APPLICABLE FOR THE FOLLOWING WIND CONDITIONS:

130 MPH WIND, 30' MEAN HGT, ASCE 7-98, ASCE 7-02 OR ASCE 7-05, CLOSED BLGD, LOCATED ANYWHERE IN ROOF, CAT II, EXP C, WIND TC DL=5 PSF, WIND BC DL=5 PSF

110 MPH WIND, 30' MEAN HGT, SBC ENCLOSED BLDG, LOCATED ANYWHERE IN ROOF WIND TC DL=5 PSF, WIND BC DL=5 PSF

FRONT FACE (E,*) PLATES MAY BE OFFSET FROM BACK FACE PLATES AS LONG AS BOTH FACES ARE SPACED 4' OC MAX.

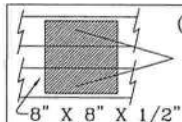

(4) 6d BOX (0.099"X 2",MIN) NAILS.

8" X 8" X 1/2" RATED SHEATHING GUSSETS (EACH FACE) MAY BE USED IN LIEU OF TRULOX PLATES. ATTACH WITH (8) 6d BOX (0.099"X 2",MIN) NAILS PER GUSSET.

(4) IN CAP BC AND (4) IN BASE TRUSS FLAT TC.

JOINT TYPE	SPANS UP TO			
	30'	34'	38'	52'
A	2X4	2.5X4	2.5X4	3X5
B	4X6	5X6	5X6	5X6
C	1.5X3	1.5X4	1.5X4	1.5X4
D	5X4	5X5	5X5	5X6
E	4X6 OR 3X6 TRULOX AT 4' OC, ROTATED VERTICALLY			

ATTACH TRULOX PLATES WITH (8) 0.120" X 1.375" NAILS, OR EQUAL, PER FACE PER PLY. (4) NAILS IN EACH MEMBER TO BE CONNECTED. REFER TO DRAWING 160 TL FOR TRULOX INFORMATION.

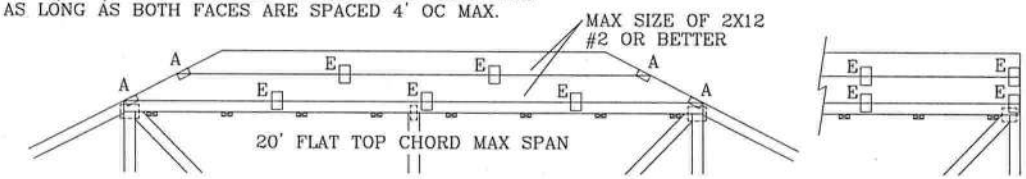

WEB BRACING CHART	
WEB LENGTH	REQUIRED BRACING
0' TO 7'9"	NO BRACING
7'9" TO 10'	1x4 "T" BRACE. SAME GRADE, SPECIES AS WEB MEMBER, OR BETTER, AND 80% LENGTH OF WEB MEMBER. ATTACH WITH 8d BOX (0.113"X 2.5",MIN) NAILS AT 4" OC.
10' TO 14'	2x4 "T" BRACE. SAME GRADE, SPECIES AS WEB MEMBER, OR BETTER, AND 80% LENGTH OF WEB MEMBER. ATTACH WITH 16d BOX (0.135"X 3.5",MIN) NAILS AT 4" OC

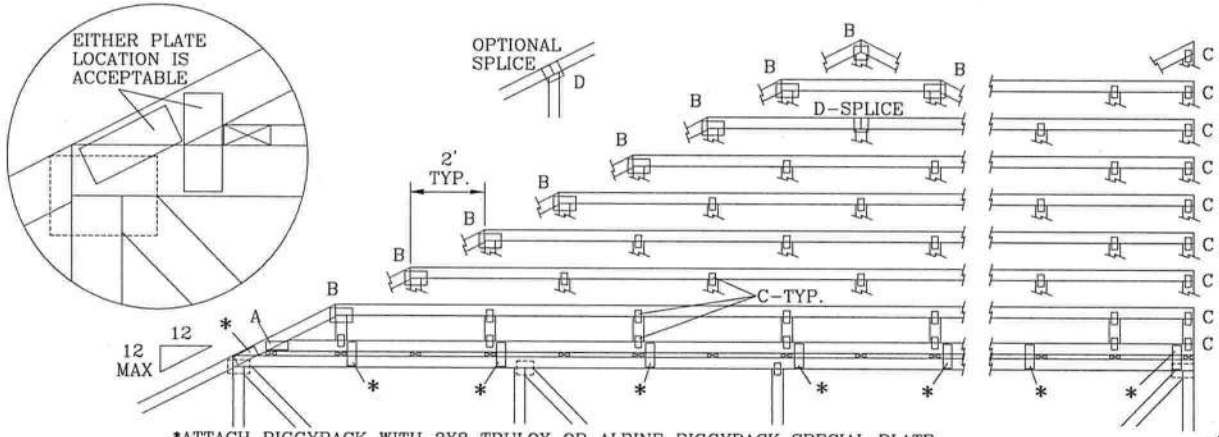

*ATTACH PIGGYBACK WITH 3X8 TRULOX OR ALPINE PIGGYBACK SPECIAL PLATE.

* PIGGYBACK SPECIAL PLATE

ATTACH TEETH TO THE PIGGYBACK AT THE TIME OF FABRICATION. ATTACH TO SUPPORTING TRUSS WITH (4) 0.120" X 1.375" NAILS PER FACE PER PLY. APPLY PIGGYBACK SPECIAL PLATE TO EACH TRUSS FACE AND SPACE 4' OC OR LESS.

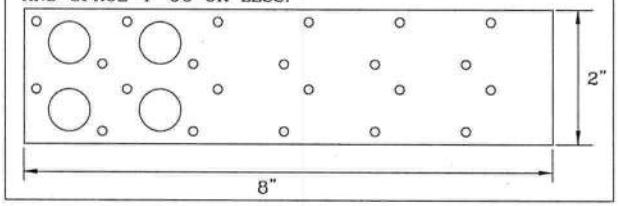

THIS DRAWING REPLACES DRAWINGS 634,016 634,017 & 847,045

ALPINE

ITW BUILDING COMPONENTS GROUP, INC.
POMPANO BEACH, FLORIDA

WARNING TRUSSES REQUIRE EXTREME CARE IN FABRICATING, HANDLING, SHIPPING, INSTALLING AND BRACING. REFER TO BCSI (BUILDING COMPONENT SAFETY INFORMATION), PUBLISHED BY TPI (TRUSS PLATE INSTITUTE, 218 NORTH LEE STR., SUITE 312, ALEXANDRIA, VA. 22314) AND WTCA (WOOD TRUSS COUNCIL OF AMERICA, 6300 ENTERPRISE LN, MADISON, WI 53719) FOR SAFETY PRACTICES PRIOR TO PERFORMING THESE FUNCTIONS. UNLESS OTHERWISE INDICATED, TOP CHORD SHALL HAVE PROPERLY ATTACHED STRUCTURAL PANELS AND BOTTOM CHORD SHALL HAVE A PROPERLY ATTACHED RIGID CEILING.

IMPORTANT FURNISH COPY OF THIS DESIGN TO INSTALLATION CONTRACTOR. ITW BCG, INC., SHALL NOT BE RESPONSIBLE FOR ANY DEVIATION FROM THIS DESIGN; ANY FAILURE TO BUILD THE TRUSS IN CONFORMANCE WITH TPI; OR FABRICATING, HANDLING, SHIPPING, INSTALLING & BRACING OF TRUSSES THIS DESIGN CONFORMS WITH APPLICABLE PROVISIONS OF NDS (NATIONAL DESIGN SPEC, BY AF&PA) AND THE ITW, BCG CONNECTOR PLATES ARE MADE OF 20/18/16GA (W,H/SS/K) ASTM A653 GRADE 40/60 (W,K/H,SS) GALV. STEEL. APPLY PLATES TO EACH FACE OF TRUSS AND, UNLESS OTHERWISE LOCATED ON THIS DESIGN, POSITION PER DRAWINGS 160A-Z. ANY INSPECTION OF PLATES FOLLOWED BY (1) SHALL BE PER ANNEX A3 OF TPI 1-2002 SEC. 3. A SEAL ON THIS DRAWING INDICATES ACCEPTANCE OF PROFESSIONAL ENGINEERING RESPONSIBILITY SOLELY FOR THE TRUSS COMPONENT DESIGN SHOWN. THE SUITABILITY AND USE OF THIS COMPONENT FOR ANY BUILDING IS THE RESPONSIBILITY OF THE BUILDING DESIGNER, PER ANSI/TPI 1 SEC. 2.

Aug 29

JAMES F. COLLINS JR. LICENSE No. 52212 STATE OF FLORIDA PROFESSIONAL ENGINEER

MAX LOADING
55 PSF AT 1.33 DUR. FAC.
50 PSF AT 1.25 DUR. FAC.
47 PSF AT 1.15 DUR. FAC.
SPACING 24.0"

REF	PIGGYBACK
DATE	2/23/07
DRWG	PIGBACKB0207
-ENG	DLJ/KAR

VALLEY TRUSS DETAIL

TOP CHORD 2X4 SP #2 OR SPF #1/#2 OR BETTER.
BOT CHORD 2X3(*) OR 2X4 SP #2N OR SPF #1/#2 OR BETTER.
WEBS 2X4 SP #3 OR BETTER.

* 2X3 MAY BE RIPPED FROM A 2X6 (PITCHED OR SQUARE).

** ATTACH EACH VALLEY TO EVERY SUPPORTING TRUSS WITH: (2) 16d BOX (0.135" X 3.5") NAILS TOE-NAILED FOR SBC 110 MPH, ASCE 7-93 110 MPH OR ASCE 7-98, ASCE 7-02 OR ASCE 7-05 130 MPH. 15' MEAN HEIGHT, ENCLOSED BUILDING, EXP. C, RESIDENTIAL, WIND TC DL=5 PSF

UNLESS SPECIFIED ON ENGINEER'S SEALED DESIGN, APPLY 1X4 "T"-BRACE, 80% LENGTH OF WEB, VALLEY WEB, SAME SPECIES AND GRADE OR BETTER, ATTACHED WITH 8d BOX (0.113" X 2.5") NAILS AT 6" OC, OR CONTINUOUS LATERAL BRACING, EQUALLY SPACED, FOR VERTICAL VALLEY WEBS GREATER THAN 7'9".

MAXIMUM VALLEY VERTICAL HEIGHT MAY NOT EXCEED 12'0".

TOP CHORD OF TRUSS BENEATH VALLEY SET MUST BE BRACED WITH:
PROPERLY ATTACHED, RATED SHEATHING APPLIED PRIOR TO VALLEY TRUSS INSTALLATION
OR
PURLINS AT 24" OC OR AS OTHERWISE SPECIFIED ON ENGINEERS' SEALED DESIGN
OR
BY VALLEY TRUSSES USED IN LIEU OF PURLIN SPACING AS SPECIFIED ON ENGINEERS' SEALED DESIGN.

*** NOTE THAT THE PURLIN SPACING FOR BRACING THE TOP CHORD OF THE TRUSS BENEATH THE VALLEY IS MEASURED ALONG THE SLOPE OF THE TOP CHORD.

++ LARGER SPANS MAY BE BUILT AS LONG AS THE VERTICAL HEIGHT DOES NOT EXCEED 12'0".

BOTTOM CHORD MAY BE SQUARE OR PITCHED CUT AS SHOWN.

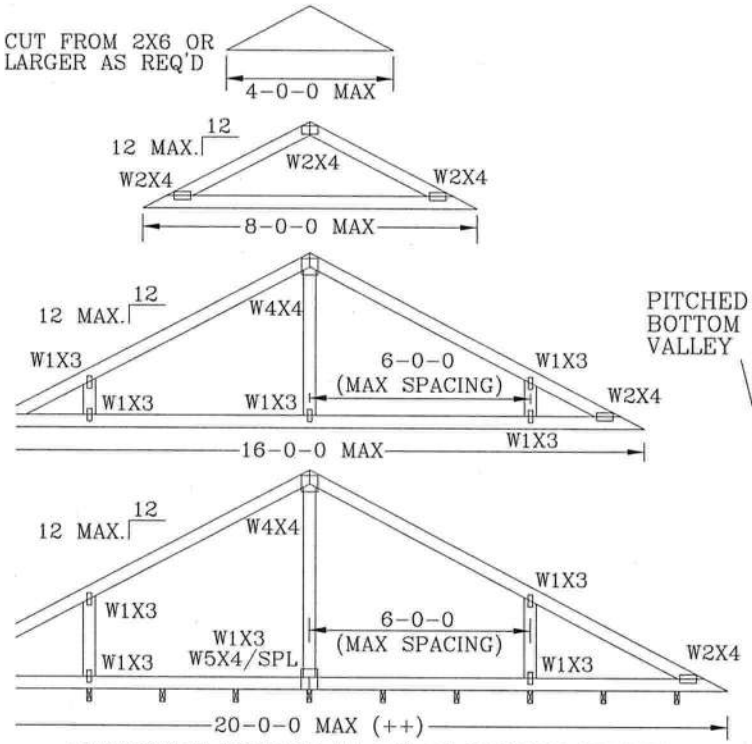

SUPPORTING TRUSSES AT 24" OC MAXIMUM SPACING.

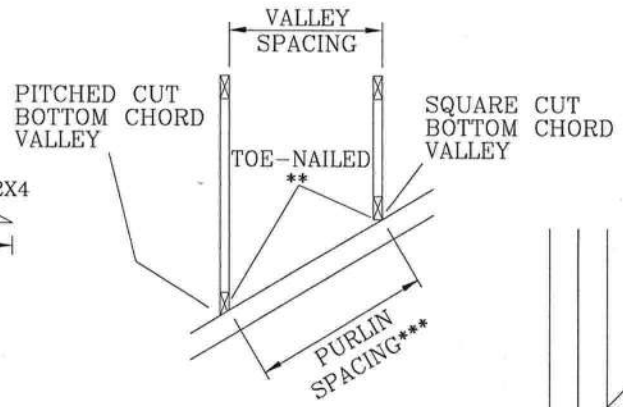

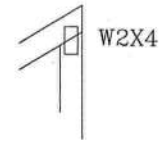

OPTIONAL STUB END DETAIL

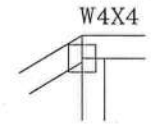

OPTIONAL HIP JOINT DETAIL

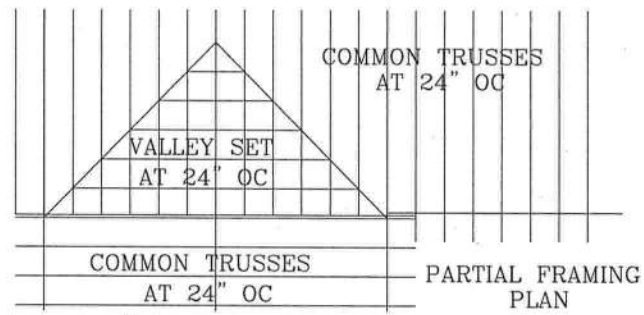

PARTIAL FRAMING PLAN

THIS DRAWING REPLACES DRAWING A105

ALPINE
ITW BUILDING COMPONENTS GROUP, INC.
POMPANO BEACH, FLORIDA

WARNING TRUSSES REQUIRE EXTREME CARE IN FABRICATING, HANDLING, SHIPPING, INSTALLING AND BRACING. REFER TO BCSI (BUILDING COMPONENT SAFETY INFORMATION), PUBLISHED BY TPI (TRUSS PLATE INSTITUTE, 218 NORTH LEE STR., SUITE 312, ALEXANDRIA, VA. 22314) AND WTCA (WOOD TRUSS COUNCIL OF AMERICA, 6300 ENTERPRISE LN, MADISON, WI 53719) FOR SAFETY PRACTICES PRIOR TO PERFORMING THESE FUNCTIONS. UNLESS OTHERWISE INDICATED, TOP CHORD SHALL HAVE PROPERLY ATTACHED STRUCTURAL PANELS AND BOTTOM CHORD SHALL HAVE A PROPERLY ATTACHED RIGID CEILING.

IMPORTANT FURNISH COPY OF THIS DESIGN TO INSTALLATION CONTRACTOR. ITW BCG, INC., SHALL NOT BE RESPONSIBLE FOR ANY DEVIATION FROM THIS DESIGN; ANY FAILURE TO BUILD THE TRUSS IN CONFORMANCE WITH TPI; OR FABRICATING, HANDLING, SHIPPING, INSTALLING & BRACING OF TRUSSES. DESIGN CONFORMS WITH APPLICABLE PROVISIONS OF NDS (NATIONAL DESIGN SPEC, BY AF&PA) AND THE ITW, BCG CONNECTOR PLATES ARE MADE OF 20/18/16GA (W,H/SS/K) ASTM A653 GRADE 40/60 (W,K/H,SS) GALV. STEEL. APPLY PLATES TO EACH FACE OF TRUSS AND, UNLESS OTHERWISE LOCATED ON THIS DESIGN, POSITION PER DRAWINGS 160A-Z. ANY INSPECTION OF PLATES FOLLOWED BY (I) SHALL BE PER ANNEX A3 OF TPI 1-2002 SEC. 3. A SEAL ON THIS DRAWING INDICATES ACCEPTANCE OF PROFESSIONAL ENGINEERING RESPONSIBILITY SOLELY FOR THE TRUSS COMPONENT DESIGN SHOWN. THE SUITABILITY AND USE OF THIS COMPONENT FOR ANY BUILDING IS THE RESPONSIBILITY OF THE BUILDING DESIGNER, PER ANSI/TPI 1 SEC. 2.

Aug 23, '07

JAMES F. COLLINS, JR. LICENSE No. 52212 STATE OF FLORIDA PROFESSIONAL ENGINEER

TC LL	30	30	40 PSF	
TC DL	20	15	7 PSF	
BC DL	10	10	10 PSF	
BC LL	0	0	0 PSF	
TOT. LD.	60	55	57 PSF	
DUR.FAC.	1.25/1.33	1.15	1.15	
SPACING		24"		

REF	VALLEY DETAIL
DATE	2/23/07
DRWG	VALTRUSS0207
-ENG	MLH/KAR

CERTIFICATE OF

OCCUPANCY

COLUMBIA COUNTY, FLORIDA

Department of Building and Zoning Inspection

This Certificate of Occupancy is issued to the below named permit holder for the building and premises at the below named location, and certifies that the work has been completed in accordance with the Columbia County Building Code.

Parcel Number 15-5S-16-03622-024 **Building permit No.** 000025895

Use Classification SFD,UTILITY **Fire:** 0.00

Permit Holder OWNER BUILDER **Waste:**

Owner of Building LEE BLATTER **Total:** 0.00

Location: 187 SW VELMA GLEN, LAKE CITY, FL

Date: 12/18/2007

Wayne H. Russ

Building Inspector

POST IN A CONSPICUOUS PLACE
(Business Places Only)