YOONHWAK KIM
LICENSE
No. 86367
STATE OF FLORIDA
PROFESSIONAL ENGINEER
08/18/2020

This document has been electronically signed and sealed using a Digital Signature. Printed copies without an original signature must be verified using the original electronic version.

ALPINE
AN ITW COMPANY

FL REG# 278, Yoonhwak Kim, FL PE #86367

Alpine, an ITW Company
6750 Forum Drive, Suite 305
Orlando, FL 32821
Phone: (800)755-6001
www.alpineitw.com

COLUMBIA COUNTY BUILDING DEPARTMENT
Received for FILE COPY
Code Compliance
PLANS EXAMINER

Site Information:	Page 1:
Customer: W. B. Howland Company, Inc.	*Job Number:* 20-4510
Job Description: Lot 41 JL	
Address: LOT 41 JEWELL LAKE, LAKE CITY, FL	

Job Engineering Criteria:	
Design Code: FBC 2017 RES	*IntelliVIEW Version:* 19.02.02B *JRef #:* 1WXX2150001
Wind Standard: ASCE 7-10 *Wind Speed (mph):* 130 *Building Type:* Closed	*Roof Load (psf):* 20.00-10.00- 0.00-10.00 *Floor Load (psf):* None

This package contains general notes pages, 25 truss drawing(s) and 5 detail(s).

Item	Drawing Number	Truss	Item	Drawing Number	Truss
1	231.20.1145.03259	A01	2	231.20.1145.03305	A02
3	231.20.1145.03291	A03	4	231.20.1149.53013	A04
5	231.20.1149.52686	B01	6	231.20.1149.52530	B02
7	231.20.1149.52827	B03	8	231.20.1149.52701	B04
9	231.20.1149.52717	B05	10	231.20.1149.52967	B06
11	231.20.1149.52670	B07	12	231.20.1149.52826	C01
13	231.20.1149.52779	C02	14	231.20.1153.33710	C03
15	231.20.1153.36390	D01	16	231.20.1153.59699	D02
17	231.20.1153.59759	G01	18	231.20.1153.59713	G02
19	231.20.1153.59823	HJ1	20	231.20.1153.59869	J1
21	231.20.1153.59870	J2	22	231.20.1153.59698	J2A
23	231.20.1153.59760	J3	24	231.20.1153.59838	P01
25	231.20.1153.59714	P02	26	A14015ENC101014	
27	BRCLBSUB0119		28	GBLLETIN0118	
29	PB160101014		30	A14030ENC101014	

General Notes

Truss Design Engineer Scope of Work, Design Assumptions and Design Responsibilities:
The design responsibilities assumed in the preparation of these design drawings are those specified in ANSI/TPI 1, Chapter 2; and the National Design Standard for Metal Plate Connected Wood Truss Construction, by the Truss Plate Institute. The truss component designs conform to the applicable provisions of ANSI/TPI 1 and NDS, the National Design Specification for Wood Construction by AWC. The truss component designs are based on the specified loading and dimension information furnished by others to the Truss Design Engineer. The Truss Design Engineer has no duty to independently verify the accuracy or completeness of the information provided by others and may rely on that information without liability. The responsibility for verification of that information remains with others neither employed nor controlled by the Truss Design Engineer. The Truss Design Engineer's seal and signature on the attached drawings, or cover page listing these drawings, indicates acceptance of professional engineering responsibility solely for the truss component designs and not for the technical information furnished by others which technical information and consequences thereof remain their sole responsibility.

The suitability and use of these drawings for any particular structure is the responsibility of the Building Designer in accordance with ANSI/TPI 1 Chapter 2. The Building Designer is responsible for determining that the dimensions and loads for each truss component match those required by the plans and by the actual use of the individual component, and for ascertaining that the loads shown on the drawings meet or exceed applicable building code requirements and any additional factors required in the particular application. Truss components using metal connector plates with integral teeth shall not be placed in environments that will cause the moisture content of the wood in which plates are embedded to exceed 19% and/or cause corrosion of connector plates and other metal fasteners.

The Truss Design Engineer shall not be responsible for items beyond the specific scope of the agreed contracted work set forth herein, including but not limited to: verifying the dimensions of the truss component, calculation of any of the truss component design loads, inspection of the truss components before or after installation, the design of temporary or permanent bracing and their attachment required in the roof and/or floor systems, the design of diaphragms or shear walls, the design of load transfer connections to and from diaphragms and shear walls, the design of load transfer to the foundation, the design of connections for truss components to their bearing supports, the design of the bearing supports, installation of the truss components, observation of the truss component installation process, review of truss assembly procedures, sequencing of the truss component installation, construction means and methods, site and/or worker safety in the installation of the truss components and/or its connections.

This document may be a high quality facsimile of the original engineering document which is a digitally signed electronic file with third party authentication. A wet or embossed seal copy of this engineering document is available upon request.

Temporary Lateral Restraint and Bracing:
Temporary lateral restraint and diagonal bracing shall be installed according to the provisions of BCSI chapters B1, B2, B7 and/or B10 (Building Component Safety Information, by TPI and SBCA), or as specified by the Building Designer or other Registered Design Professional. The required locations for lateral restraint and/or bracing depicted on these drawings are only for the permanent lateral support of the truss members to reduce buckling lengths, and do not apply to and may not be relied upon for the temporary stability of the truss components during their installation.

Permanent Lateral Restraint and Bracing:
The required locations for lateral restraint or bracing depicted on these drawings are for the permanent lateral support of the truss members to reduce buckling lengths. Permanent lateral support shall be installed according to the provisions of BCSI chapters B3, B7 and/or B10, or as specified by the Building Designer or other Registered Design Professional. These drawings do not depict or specify installation/erection bracing, wind bracing, portal bracing or similar building stability bracing which are parts of the overall building design to be specified, designed and detailed by the Building Designer.

Connector Plate Information:
Alpine connector plates are made of ASTM A653 or ASTM A1063 galvanized steel with the following designations, gauges and grades: W=Wave, 20ga, grade 40; H=High Strength, 20ga, grade 60; S=Super Strength, 18ga, grade 60. Information on model code compliance is contained in the ICC Evaluation Service report ESR-1118, available on-line at www.icc-es.org.

Fire Retardant Treated Lumber:
Fire retardant treated lumber must be properly re-dried and maintained below 19% or less moisture level through all stages of construction and usage. Fire retardant treated lumber may be more brittle than untreated lumber. Special handling care must be taken to prevent breakage during all handling activities.

General Notes (continued)

Key to Terms:
Information provided on drawings reflects a summary of the pertinent information required for the truss design. Detailed information on load cases, reactions, member lengths, forces and members requiring permanent lateral support may be found in calculation sheets available upon written request.

BCDL = Bottom Chord standard design Dead Load in pounds per square foot.
BCLL = Bottom Chord standard design Live Load in pounds per square foot.
CL = Certified lumber.
Des Ld = total of TCLL, TCDL, BCLL and BCDL Design Load in pounds per square foot.
FRT = Fire Retardant Treated lumber.
FRT-DB = D-Blaze Fire Retardant Treated lumber.
FRT-DC = Dricon Fire Retardant Treated lumber.
FRT-FP = FirePRO Fire Retardant Treated lumber.
FRT-FL = FlamePRO Fire Retardant Treated lumber.
FRT-FT = FlameTech Fire Retardant Treated lumber.
FRT-PG = PYRO-GUARD Fire Retardant Treated lumber.
g = green lumber.
HORZ(LL) = maximum Horizontal panel point deflection due to Live Load, in inches.
HORZ(TL) = maximum Horizontal panel point long term deflection in inches, due to Total Load, including creep adjustment.
HPL = additional Horizontal Load added to a truss Piece in pounds per linear foot or pounds.
Ic = Incised lumber.
FJ = Finger Jointed lumber.
L/# = user specified divisor for limiting span/deflection ratio for evaluation of actual L/defl value.
L/defl = ratio of Length between bearings, in inches, divided by the vertical Deflection due to creep, in inches, at the referenced panel point. Reported as 999 if greater than or equal to 999.
Loc = Location, starting location of left end of bearing or panel point (joint) location of deflection.
Max BC CSI = Maximum bending and axial Combined Stress Index for Bottom Chords for of all load cases.
Max TC CSI = Maximum bending and axial Combined Stress Index for Top Chords for of all load cases.
Max Web CSI= Maximum bending and axial Combined Stress Index for Webs for of all load cases.
NCBCLL = Non-Concurrent Bottom Chord design Live Load in pounds per square foot.
PL = additional Load applied at a user specified angle on a truss Piece in pounds per linear foot or pounds.
PLB = additional vertical load added to a Bottom chord Piece of a truss in pounds per linear foot or pounds
PLT = additional vertical load added to a Top chord Piece of a truss in pounds per linear foot or pounds.
PP = Panel Point.
R = maximum downward design Reaction, in pounds, from all specified gravity load cases, at the indicated location (Loc).
-R = maximum upward design Reaction, in pounds, from all specified gravity load cases, at the identified location (Loc).
Rh = maximum horizontal design Reaction in either direction, in pounds, from all specified gravity load cases, at the indicated location (Loc).
RL = maximum horizontal design Reaction in either direction, in pounds, from all specified non-gravity (wind or seismic) load cases, at the indicated location (Loc).
Rw = maximum downward design Reaction, in pounds, from all specified non-gravity (wind or seismic) load cases, at the identified location (Loc).
TCDL = Top Chord standard design Dead Load in pounds per square foot.
TCLL = Top Chord standard design Live Load in pounds per square foot.
U = maximum Upward design reaction, in pounds, from all specified non-gravity (wind or seismic) load cases, at the indicated location (Loc).
VERT(CL) = maximum Vertical panel point deflection in inches due to Live Load and Creep Component of Dead Load in inches.
VERT(CTL) = maximum Vertical panel point deflection ratios due to Live Load and Creep Component of Dead Load, and maximum long term Vertical panel point deflection in inches due to Total load, including creep adjustment.
VERT(LL) = maximum Vertical panel point deflection in inches due to Live Load.
VERT(TL) = maximum Vertical panel point long term deflection in inches due to Total load, including creep adjustment.
W = Width of non-hanger bearing, in inches.

Refer to ASCE-7 for Wind and Seismic abbreviations.
Uppercase Acronyms not explained above are as defined in TPI 1.

References:

1. AWC: American Wood Council; 222 Catoctin Circle SE, Suite 201; Leesburg, VA 20175; www.awc.org.
2. ICC: International Code Council; www.iccsafe.org.
3. Alpine, a division of ITW Building Components Group Inc.: 514 Earth City Expressway, Suite 242, Earth City, MO 63045; www.alpineitw.com.
4. TPI: Truss Plate Institute, 2670 Crain Highway, Suite 203, Waldorf, MD 20601; www.tpinst.org.
5. SBCA: Wood Truss Council of America, 6300 Enterprise Lane, Madison, WI 53719; www.sbcindustry.com.

SEQN: 362164 / COMN FROM: CDM	Ply: 1 Qty: 3	**Job Number:** 20-4510 Lot 41 JL **Truss Label:** A01	Cust: R 215 JRef: 1WXX2150001 T20 DrwNo: 231.20.1145.03259 KD / YK 08/18/2020

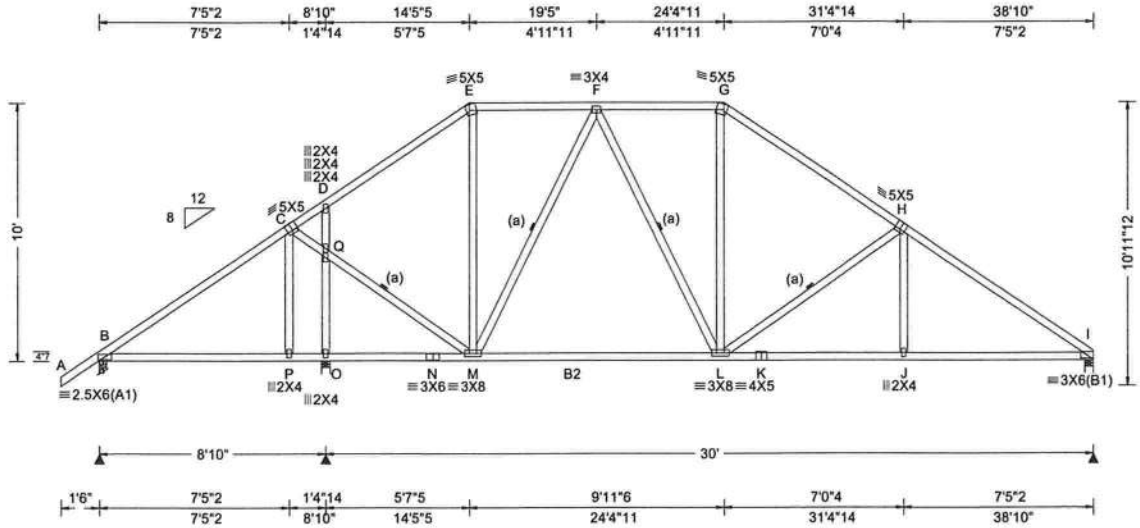

Loading Criteria (psf)

TCLL:	20.00
TCDL:	10.00
BCLL:	0.00
BCDL:	10.00
Des Ld:	40.00
NCBCLL:	10.00
Soffit:	2.00

Load Duration: 1.25
Spacing: 24.0 "

Wind Criteria
Wind Std: ASCE 7-10
Speed: 130 mph
Enclosure: Closed
Risk Category: II
EXP: C Kzt: NA
Mean Height: 15.00 ft
TCDL: 5.0 psf
BCDL: 5.0 psf
MWFRS Parallel Dist: h/2 to h
C&C Dist a: 3.88 ft
Loc. from endwall: not in 9.00 ft
GCpi: 0.18
Wind Duration: 1.60

Snow Criteria (Pg,Pf in PSF)
Pg: NA Ct: NA CAT: NA
Pf: NA Ce: NA
Lu: NA Cs: NA
Snow Duration: NA

Building Code:
FBC 2017 RES
TPI Std: 2014
Rep Fac: Yes
FT/RT:20(0)/10(0)
Plate Type(s):
WAVE

Defl/CSI Criteria

PP Deflection in	loc	L/defl	L/#
VERT(LL): 0.091	L	999	360
VERT(CL): 0.179	L	999	240
HORZ(LL): 0.043	J	-	-
HORZ(TL): 0.084	J	-	-

Creep Factor: 2.0
Max TC CSI: 0.857
Max BC CSI: 0.785
Max Web CSI: 0.711

VIEW Ver: 19.02.02B.0122.15

▲ Maximum Reactions (lbs)

	Gravity			Non-Gravity		
Loc	R+	/ R-	/ Rh	/ Rw	/ U	/ RL
B	1277	/-	/-	/717	/191	/316
O	757	/-	/-	/445	/131	/-
I	1574	/-	/-	/901	/236	/-

Wind reactions based on MWFRS
B Brg Width = 3.5 Min Req = 1.5
O Brg Width = 4.0 Min Req = 1.5
I Brg Width = 4.0 Min Req = 1.9
Bearings B, O, & I are a rigid surface.
Members not listed have forces less than 375#

Maximum Top Chord Forces Per Ply (lbs)

Chords	Tens.	Comp.	Chords	Tens.	Comp.
B - C	303	-1623	F - G	454	-1470
C - D	336	-1491	G - H	481	-1890
D - E	433	-1660	H - I	507	-2388
E - F	406	-1285			

Maximum Bot Chord Forces Per Ply (lbs)

Chords	Tens.	Comp.	Chords	Tens.	Comp.
B - P	1239	-149	M - L	1454	-147
P - O	1240	-150	L - K	1887	-319
O - N	1240	-150	K - J	1887	-319
N - M	1240	-150	J - I	1888	-318

Maximum Web Forces Per Ply (lbs)

Webs	Tens.	Comp.	Webs	Tens.	Comp.
Q - D	140	-477	M - F	123	-424
O - Q	155	-574	L - G	596	-113
E - M	559	-100	L - H	218	-525

Lumber
Top chord: 2x4 SP #2;
Bot chord: 2x4 SP #2; B2 2x4 SP M-31;
Webs: 2x4 SP #3;

Bracing
(a) Continuous lateral restraint equally spaced on member.

Loading
Truss passed check for 20 psf additional bottom chord live load in areas with 42"-high x 24"-wide clearance.

Wind
Wind loads based on MWFRS with additional C&C member design.

Additional Notes
Refer to DWG PB160101014 for piggyback details.
The overall height of this truss excluding overhang is 10-0-0.

YOONHWAK KIM
LICENSE
No. 86367
STATE OF
FLORIDA
PROFESSIONAL ENGINEER

FL REG# 278, Yoonhwak Kim, FL PE #86367
08/18/2020

****WARNING**** READ AND FOLLOW ALL NOTES ON THIS DRAWING!
****IMPORTANT**** FURNISH THIS DRAWING TO ALL CONTRACTORS INCLUDING THE INSTALLERS

Trusses require extreme care in fabricating, handling, shipping, installing and bracing. Refer to and follow the latest edition of BCSI (Building Component Safety Information, by TPI and SBCA) for safety practices prior to performing these functions. Installers shall provide temporary bracing per BCSI. Unless noted otherwise, top chord shall have properly attached structural sheathing and bottom chord shall have a properly attached rigid ceiling. Locations shown for permanent lateral restraint of webs shall have bracing installed per BCSI sections B3, B7, or B10, as applicable. Apply plates to each face of truss and position as shown above and on the Joint Details, unless noted otherwise. Refer to drawings 160A-Z for standard plate positions. Refer to job's General Notes page for additional information.

Alpine, a division of ITW Building Components Group Inc. shall not be responsible for any deviation from this drawing, any failure to build the truss in conformance with ANSI/TPI 1, or for handling, shipping, installation and bracing of trusses. A seal on this drawing or cover page listing this drawing, indicates acceptance of professional engineering responsibility solely for the design shown. The suitability and use of this drawing for any structure is the responsibility of the Building Designer per ANSI/TPI 1 Sec.2.

For more information see these web sites: Alpine: www.alpineitw.com; TPI: www.tpinst.org; SBCA: www.sbcindustry.com; ICC: www.iccsafe.org

ALPINE
AN ITW COMPANY
6750 Forum Drive
Suite 305
Orlando FL, 32821

SEQN: 362167 / SPEC FROM: CDM	Ply: 1 Qty: 3	**Job Number:** 20-4510 Lot 41 JL **Truss Label:** A02	Cust: R 215 JRef: 1WXX2150001 T28 DrwNo: 231.20.1145.03305 KD / YK 08/18/2020

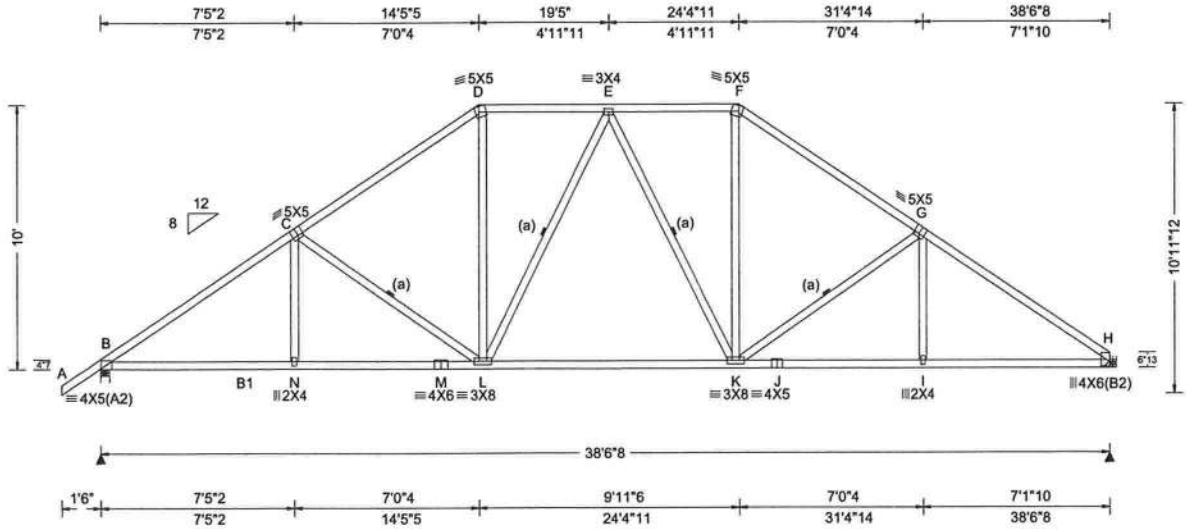

Loading Criteria (psf)	**Wind Criteria**	**Snow Criteria** (Pg,Pf in PSF)	**Defl/CSI Criteria**
TCLL: 20.00	Wind Std: ASCE 7-10	Pg: NA Ct: NA CAT: NA	PP Deflection in loc L/defl L/#
TCDL: 10.00	Speed: 130 mph	Pf: NA Ce: NA	VERT(LL): 0.125 E 999 360
BCLL: 0.00	Enclosure: Closed	Lu: NA Cs: NA	VERT(CL): 0.245 E 999 240
BCDL: 10.00	Risk Category: II	Snow Duration: NA	HORZ(LL): 0.061 I - -
Des Ld: 40.00	EXP: C Kzt: NA		HORZ(TL): 0.119 I - -
NCBCLL: 10.00	Mean Height: 15.00 ft	Building Code:	Creep Factor: 2.0
Soffit: 2.00	TCDL: 5.0 psf	FBC 2017 RES	Max TC CSI: 0.692
Load Duration: 1.25	BCDL: 5.0 psf	TPI Std: 2014	Max BC CSI: 0.785
Spacing: 24.0 "	MWFRS Parallel Dist: h/2 to h	Rep Fac: Yes	Max Web CSI: 0.280
	C&C Dist a: 3.85 ft	FT/RT:20(0)/10(0)	
	Loc. from endwall: not in 9.00 ft	Plate Type(s):	
	GCpi: 0.18	WAVE	VIEW Ver: 19.02.02B.0122.15
	Wind Duration: 1.60		

▲ Maximum Reactions (lbs)

	Gravity			Non-Gravity		
Loc	R+	/ R-	/ Rh	/ Rw	/ U	/ RL
B	1839	/-	/-	/1057	/291	/312
H	1725	/-	/-	/957	/264	/-

Wind reactions based on MWFRS
B Brg Width = 4.0 Min Req = 2.2
H Brg Width = - Min Req = -
Bearing B is a rigid surface.
Members not listed have forces less than 375#

Maximum Top Chord Forces Per Ply (lbs)

Chords	Tens.	Comp.	Chords	Tens.	Comp.
B - C	558	-2648	E - F	509	-1698
C - D	542	-2163	F - G	552	-2156
D - E	514	-1701	G - H	565	-2599

Maximum Bot Chord Forces Per Ply (lbs)

Chords	Tens.	Comp.	Chords	Tens.	Comp.
B - N	2099	-377	K - J	2051	-368
N - M	2098	-377	J - I	2051	-368
M - L	2098	-377	I - H	2051	-367
L - K	1766	-234			

Maximum Web Forces Per Ply (lbs)

Webs	Tens.	Comp.	Webs	Tens.	Comp.
C - L	206	-500	K - F	728	-149
D - L	736	-140	K - G	203	-447

Lumber

Top chord: 2x4 SP #2;
Bot chord: 2x4 SP M-31; B1 2x4 SP #2;
Webs: 2x4 SP #3;

Bracing

(a) Continuous lateral restraint equally spaced on member.

Hangers / Ties

Simpson Construction Hardware is specified based on the most current information provided by Simpson Strong-Tie. Please refer to the most recent Simpson Strong-Tie catalog for additional information.

Recommended hanger connections are based on manufacturer tested capacities and calculations. Conditions may exist that require different connections than indicated. Refer to manufacturer publication for additional information.

Hanger specified assumes connection to supporting chord is located a minimum of five times the depth of the supporting chord from any unsupported end, unless unsupported chord end has 85% plating coverage.

Bearing at location x=38'3"8 uses the following support conditions: 38'3"8
Bearing H (38'3"8, 9'1"2) HUS26
Supporting Member: (3)2x8 SP 2400f-2.0E
(14) 0.148"x3" nails into supporting member,
(4) 0.148"x3" nails into supported member.

Loading

Truss passed check for 20 psf additional bottom chord live load in areas with 42"-high x 24"-wide clearance.

Wind

Wind loads based on MWFRS with additional C&C member design.

Additional Notes

Refer to DWG PB160101014 for piggyback details.

The overall height of this truss, including overhangs, 10-0-0.

YOONHWAK KIM
LICENSE
No. 86367
STATE OF FLORIDA
PROFESSIONAL ENGINEER

FL REG# 278, Yoonhwak Kim, FL PE #86367
08/18/2020

****WARNING**** READ AND FOLLOW ALL NOTES ON THIS DRAWING!
****IMPORTANT**** FURNISH THIS DRAWING TO ALL CONTRACTORS INCLUDING THE INSTALLERS

Trusses require extreme care in fabricating, handling, shipping, installing and bracing. Refer to and follow the latest edition of BCSI (Building Component Safety Information, by TPI and SBCA) for safety practices prior to performing these functions. Installers shall provide temporary bracing per BCSI. Unless noted otherwise, top chord shall have properly attached structural sheathing and bottom chord shall have a properly attached rigid ceiling. Locations shown for permanent lateral restraint of webs shall have bracing installed per BCSI sections B3, B7, or B10, as applicable. Apply plates to each face of truss and position as shown above and on the Joint Details, unless noted otherwise. Refer to drawings 160A-Z for standard plate positions. Refer to job's General Notes page for additional information.

Alpine, a division of ITW Building Components Group Inc. shall not be responsible for any deviation from this drawing, any failure to build the truss in conformance with ANSI/TPI 1, or for handling, shipping, installation and bracing of trusses. A seal on this drawing or cover page listing this drawing, indicates acceptance of professional engineering responsibility solely for the design shown. The suitability and use of this drawing for any structure is the responsibility of the Building Designer per ANSI/TPI 1 Sec.2.

For more information see these web sites: Alpine: www.alpineitw.com; TPI: www.tpinst.org; SBCA: www.sbcindustry.com; ICC: www.iccsafe.org

ALPINE AN ITW COMPANY
6750 Forum Drive
Suite 305
Orlando FL, 32821

SEQN: 362175 / GABL FROM: CDM	Ply: 2 Qty: 1	**Job Number:** 20-4510 Lot 41 JL **Truss Label:** A03	Cust: R 215 JRef: 1WXX2150001 T4 DrwNo: 231.20.1145.03291 KD / YK 08/18/2020

2 Complete Trusses Required

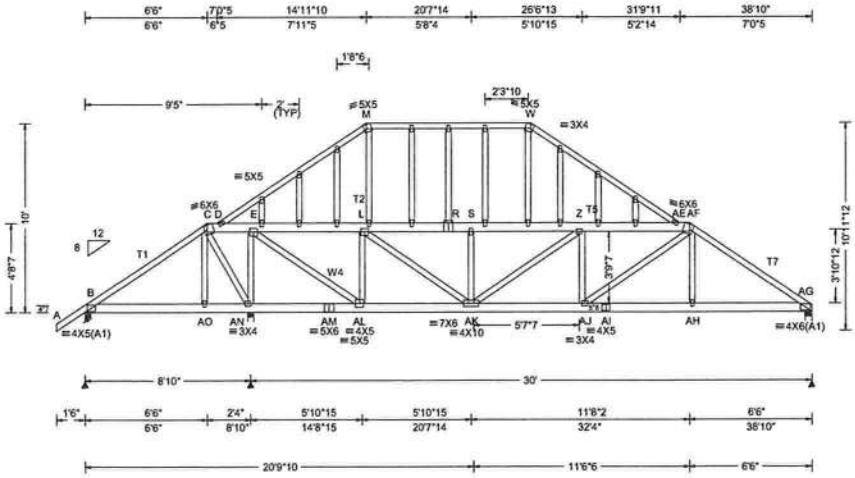

Loading Criteria (psf)	**Wind Criteria**	**Snow Criteria** (Pg,Pf in PSF)	**Defl/CSI Criteria**
TCLL: 20.00 TCDL: 10.00 BCLL: 0.00 BCDL: 10.00 Des Ld: 40.00 NCBCLL: 0.00 Soffit: 2.00 Load Duration: 1.25 Spacing: 24.0 "	Wind Std: ASCE 7-10 Speed: 130 mph Enclosure: Closed Risk Category: II EXP: C Kzt: NA Mean Height: 15.00 ft TCDL: 5.0 psf BCDL: 5.0 psf MWFRS Parallel Dist: 0 to h/2 C&C Dist a: 3.88 ft Loc. from endwall: not in 5.00 ft GCpi: 0.18 Wind Duration: 1.60	Pg: NA Ct: NA CAT: NA Pf: NA Ce: NA Lu: NA Cs: NA Snow Duration: NA Building Code: FBC 2017 RES TPI Std: 2014 Rep Fac: No FT/RT:20(0)/10(0) Plate Type(s): WAVE	PP Deflection in loc L/defl L/# VERT(LL): 0.085 AC 999 360 VERT(CL): 0.194 AC 999 240 HORZ(LL): 0.018 M - - HORZ(TL): 0.040 M - - Creep Factor: 2.0 Max TC CSI: 0.241 Max BC CSI: 0.183 Max Web CSI: 0.631 VIEW Ver: 19.02.02B.0122.15

▲ Maximum Reactions (lbs)

	Gravity		Non-Gravity		
Loc	R+ / R-	/ Rh	/ Rw	/ U	/ RL
B	119 /-171	/-	/-	/22	/-
AN	6312 /-	/-	/-	/1079	/-
AG	3452 /-	/-	/-	/582	/-

Wind reactions based on MWFRS
B Brg Width = 3.5 Min Req = 1.5
AN Brg Width = 4.0 Min Req = 2.2
AG Brg Width = 4.0 Min Req = 1.5
Bearings B, AN, & AG are a rigid surface.
Members not listed have forces less than 375#

Maximum Top Chord Forces Per Ply (lbs)

Chords	Tens.	Comp.	Chords	Tens.	Comp.
B - C	508	-84	R - S	232	-1435
C - D	908	-151	S - Z	233	-1442
D - E	1656	-284	W -AE	185	-1025
D - M	180	-995	Z -AE	318	-1925
L - R	233	-1441	AE-AF	445	-2650
M - W	133	-754	AF-AG	499	-2879

Maximum Bot Chord Forces Per Ply (lbs)

Chords	Tens.	Comp.	Chords	Tens.	Comp.
AO-AN	56	-376	AK-AJ	2677	-454
AN-AM	123	-762	AJ-AI	2330	-401
AM-AL	123	-762	AI-AH	2330	-401
AL-AK	969	-163	AH-AG	2339	-401

Maximum Web Forces Per Ply (lbs)

Webs	Tens.	Comp.	Webs	Tens.	Comp.
C -AN	200	-1134	L -AK	1514	-251
AN- E	356	-1897	AK- Z	110	-608
E -AL	2078	-338	AJ-AF	434	-63
AL- L	227	-1070			

Lumber

Top chord: 2x4 SP #2; T1,T7 2x4 SP M-31; T2, T5 2x6 SP 2400f-2.0E;
Bot chord: 2x6 SP 2400f-2.0E;
Webs: 2x4 SP #3; W4 2x4 SP #2;

Nailnote

Nail Schedule:0.128"x3", min. nails
Top Chord: 1 Row @11.75" o.c.
Bot Chord: 1 Row @12.00" o.c.
Webs : 1 Row @ 4" o.c.
Use equal spacing between rows and stagger nails in each row to avoid splitting.

Special Loads

------(Lumber Dur.Fac.=1.25 / Plate Dur.Fac.=1.25)

TC: From	64 plf at	-1.50 to	64 plf at	6.50
TC: From	32 plf at	6.50 to	32 plf at	32.33
TC: From	64 plf at	32.33 to	64 plf at	38.83
BC: From	5 plf at	-1.50 to	5 plf at	0.00
BC: From	20 plf at	0.00 to	20 plf at	6.53
BC: From	10 plf at	6.53 to	10 plf at	32.30
BC: From	20 plf at	32.30 to	20 plf at	38.83

TC: 234 lb Conc. Load at 6.53,32.30
TC: 178 lb Conc. Load at 8.56,10.56,12.56,14.56 16.56,18.56,20.27,22.27,24.27,26.27,28.27,30.27
BC: 416 lb Conc. Load at 6.53,32.30
BC: 121 lb Conc. Load at 8.56,10.56,12.56,14.56 16.56,18.56,20.27,22.27,24.27,26.27,28.27,30.27

Plating Notes

All plates are 2X4 except as noted.

Laterally brace top chord below filler at 2'0" O.C..

Loading

Truss designed to support 1-0-0 top chord outlookers and cladding load not to exceed 5.00 PSF one face and 24.0" span opposite face. Top chord must not be cut or notched, unless specified otherwise.

Wind

Wind loads and reactions based on MWFRS.

Additional Notes

See DWGS A14015ENC101014 & GBL1E1N0118 for gable wind bracing and other requirements.

The overall height of this truss excluding overhang is 10-0-0.

YOONHWAK KIM LICENSE No. 86367 STATE OF FLORIDA PROFESSIONAL ENGINEER

FL REG# 278, Yoonhwak Kim, FL PE #86367
08/18/2020

****WARNING**** READ AND FOLLOW ALL NOTES ON THIS DRAWING!
****IMPORTANT**** FURNISH THIS DRAWING TO ALL CONTRACTORS INCLUDING THE INSTALLERS

Trusses require extreme care in fabricating, handling, shipping, installing and bracing. Refer to and follow the latest edition of BCSI (Building Component Safety Information, by TPI and SBCA) for safety practices prior to performing these functions. Installers shall provide temporary bracing per BCSI. Unless noted otherwise, top chord shall have properly attached structural sheathing and bottom chord shall have a properly attached rigid ceiling. Locations shown for permanent lateral restraint of webs shall have bracing installed per BCSI sections B3, B7, or B10, as applicable. Apply plates to each face of truss and position as shown above and on the Joint Details, unless noted otherwise. Refer to drawings 160A-Z for standard plate positions. Refer to job's General Notes page for additional information.

Alpine, a division of ITW Building Components Group Inc. shall not be responsible for any deviation from this drawing, any failure to build the truss in conformance with ANSI/TPI 1, or for handling, shipping, installation and bracing of trusses. A seal on this drawing or cover page listing this drawing, indicates acceptance of professional engineering responsibility solely for the design shown. The suitability and use of this drawing for any structure is the responsibility of the Building Designer per ANSI/TPI 1 Sec.2.

For more information see these web sites: Alpine: www.alpineitw.com; TPI: www.tpinst.org; SBCA: www.sbcindustry.com; ICC: www.iccsafe.org

ALPINE AN ITW COMPANY
6750 Forum Drive
Suite 305
Orlando FL, 32821

SEQN: 362224 / GABL	Ply: 2	Job Number: 20-4510	Cust: R 215 JRef:1WXX2150001 T25
FROM: CDM	Qty: 1	Lot 41 JL	DrwNo: 231.20.1149.53013
Page 1 of 2		Truss Label: A04	KD / YK 08/18/2020

2 Complete Trusses Required

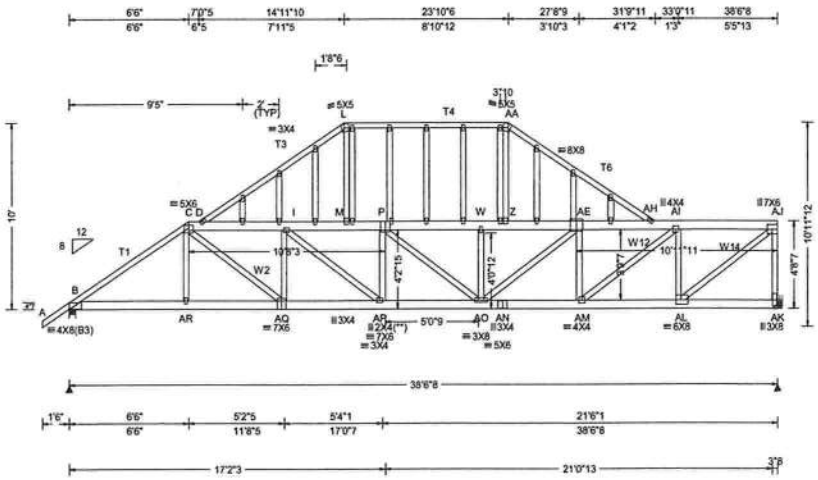

Loading Criteria (psf)
TCLL: 20.00
TCDL: 10.00
BCLL: 0.00
BCDL: 10.00
Des Ld: 40.00
NCBCLL: 0.00
Soffit: 2.00
Load Duration: 1.25
Spacing: 24.0 "

Wind Criteria
Wind Std: ASCE 7-10
Speed: 130 mph
Enclosure: Closed
Risk Category: II
EXP: C Kzt: NA
Mean Height: 15.00 ft
TCDL: 5.0 psf
BCDL: 5.0 psf
MWFRS Parallel Dist: 0 to h/2
C&C Dist a: 3.85 ft
Loc. from endwall: not in 5.00 ft
GCpi: 0.18
Wind Duration: 1.60

Snow Criteria (Pg,Pf in PSF)
Pg: NA Ct: NA CAT: NA
Pf: NA Ce: NA
Lu: NA Cs: NA
Snow Duration: NA

Building Code:
FBC 2017 RES
TPI Std: 2014
Rep Fac: No
FT/RT:20(0)/10(0)
Plate Type(s):
WAVE

Defl/CSI Criteria

PP Deflection in	loc	L/defl	L/#
VERT(LL): 0.166	S	999	360
VERT(CL): 0.373	S	999	240
HORZ(LL): 0.051	E	-	-
HORZ(TL): 0.114	E	-	-

Creep Factor: 2.0
Max TC CSI: 0.313
Max BC CSI: 0.260
Max Web CSI: 0.816

VIEW Ver: 19.02.02B.0122.15

▲ Maximum Reactions (lbs)

	Gravity			Non-Gravity		
Loc	R+	/ R-	/ Rh	/ Rw	/ U	/ RL
B	4787	/-	/-	/-	/850	/-
AK	5023	/-	/-	/-	/863	/-

Wind reactions based on MWFRS
B Brg Width = 4.0 Min Req = 2.0
AK Brg Width = - Min Req = -
Bearing B is a rigid surface.
Members not listed have forces less than 375#

Maximum Top Chord Forces Per Ply (lbs)

Chords	Tens.	Comp.	Chords	Tens.	Comp.
B - C	697	-3966	P - W	525	-3129
C - D	697	-4073	W - Z	525	-3129
D - L	276	-1557	Z -AE	527	-3144
D - I	499	-2932	AA-AH	274	-1543
I - M	536	-3192	AE-AH	487	-2869
L -AA	206	-1189	AH-AI	690	-4036
M - P	533	-3178	AI-AJ	505	-2926

Maximum Bot Chord Forces Per Ply (lbs)

Chords	Tens.	Comp.	Chords	Tens.	Comp.
B -AR	3256	-565	AO-AN	4080	-700
AR-AQ	3248	-565	AN-AM	4080	-700
AQ-AP	4141	-712	AM-AL	3072	-534
AP-AO	4364	-742			

Maximum Web Forces Per Ply (lbs)

Webs	Tens.	Comp.	Webs	Tens.	Comp.
C -AQ	1124	-180	AM-AI	1259	-203
AQ- I	125	-509	AI-AL	421	-2135
L - M	532	-84	AL-AJ	3738	-645
Z -AA	547	-89	AJ-AK	435	-2453
AE-AM	146	-632			

Lumber
Top chord: 2x6 SP 2400f-2.0E; T1 2x4 SP M-31; T3, T4,T6 2x4 SP #2;
Bot chord: 2x6 SP 2400f-2.0E;
Webs: 2x4 SP #3; W2,W12 2x4 SP #2;
W14 2x4 SP M-31;

Nailnote
Nail Schedule:0.128"x3", min. nails
Top Chord: 1 Row @11.00" o.c.
Bot Chord: 1 Row @12.00" o.c.
Webs : 1 Row @ 4" o.c.
Use equal spacing between rows and stagger nails in each row to avoid splitting.

Special Loads
------(Lumber Dur.Fac.=1.25 / Plate Dur.Fac.=1.25)
TC: From 64 plf at -1.50 to 64 plf at 6.50
TC: From 32 plf at 6.50 to 32 plf at 38.54
BC: From 5 plf at -1.50 to 5 plf at 0.00
BC: From 20 plf at 0.00 to 20 plf at 6.53
BC: From 10 plf at 6.53 to 10 plf at 38.54
TC: 234 lb Conc. Load at 6.53
TC: 178 lb Conc. Load at 8.56,10.56,12.56,14.56 16.56,18.56,20.56,22.56,24.56,26.56,28.56,30.56 32.56,34.56,36.56
BC: 416 lb Conc. Load at 6.53
BC: 121 lb Conc. Load at 8.56,10.56,12.56,14.56 16.56,18.56,20.56,22.56,24.56,26.56,28.56,30.56 32.56,34.56,36.56

Wind
Wind loads and reactions based on MWFRS.
Right end vertical not exposed to wind pressure.

Plating Notes
All plates are 2X4 except as noted.
(**) 1 plate(s) require special positioning. Refer to scaled plate plot details for special positioning requirements.

Loading
Truss designed to support 1-0-0 top chord outlookers and cladding load not to exceed 5.00 PSF one face and 24.0" span opposite face. Top chord must not be cut or notched, unless specifically noted.
Laterally brace top chord below interior 24" o.c.

YOONHWAK KIM LICENSE No. 86367 STATE OF FLORIDA PROFESSIONAL ENGINEER

FL REG# 278, Yoonhwak Kim, FL PE #86367
08/18/2020

****WARNING**** READ AND FOLLOW ALL NOTES ON THIS DRAWING!
****IMPORTANT**** FURNISH THIS DRAWING TO ALL CONTRACTORS INCLUDING THE INSTALLERS

Trusses require extreme care in fabricating, handling, shipping, installing and bracing. Refer to and follow the latest edition of BCSI (Building Component Safety Information, by TPI and SBCA) for safety practices prior to performing these functions. Installers shall provide temporary bracing per BCSI. Unless noted otherwise, top chord shall have properly attached structural sheathing and bottom chord shall have a properly attached rigid ceiling. Locations shown for permanent lateral restraint of webs shall have bracing installed per BCSI sections B3, B7, or B10, as applicable. Apply plates to each face of truss and position as shown above and on the Joint Details, unless noted otherwise. Refer to drawings 160A-Z for standard plate positions. Refer to job's General Notes page for additional information.

Alpine, a division of ITW Building Components Group Inc. shall not be responsible for any deviation from this drawing, any failure to build the truss in conformance with ANSI/TPI 1, or for handling, shipping, installation and bracing of trusses. A seal on this drawing or cover page listing this drawing, indicates acceptance of professional engineering responsibility solely for the design shown. The suitability and use of this drawing for any structure is the responsibility of the Building Designer per ANSI/TPI 1 Sec.2.

For more information see these web sites: Alpine: www.alpineitw.com; TPI: www.tpinst.org; SBCA: www.sbcindustry.com; ICC: www.iccsafe.org

ALPINE AN ITW COMPANY
6750 Forum Drive
Suite 305
Orlando FL, 32821

Hangers / Ties

Simpson Construction Hardware is specified based on the most current information provided by Simpson Strong-Tie. Please refer to the most recent Simpson Strong-Tie catalog for additional information.

Recommended hanger connections are based on manufacturer tested capacities and calculations. Conditions may exist that require different connections than indicated. Refer to manufacturer publication for additional information.

Hanger specified assumes connection to supporting chord is located a minimum of five times the depth of the supporting chord from any unsupported end, unless unsupported chord end has 85% plating coverage.

Bearing at location x=38'3"8 uses the following support conditions: 38'3"8
Bearing AK (38'3"8, 9'1"2) HGUS28-2
Supporting Member: (3)2x8 SP 2400f-2.0E
(36) 0.148"x3" nails into supporting member,
(12) 0.148"x3" nails into supported member.

Additional Notes

See DWGS A14015ENC101014 & GBLLETIN0118 for gable wind bracing and other requirements.

The overall height of this truss excluding overhang is 10-0-0.

YOONHWAK KIM
LICENSE
No. 86367
STATE OF
FLORIDA
PROFESSIONAL ENGINEER

FL REG# 278, Yoonhwak Kim, FL PE #86367
08/18/2020

****WARNING**** READ AND FOLLOW ALL NOTES ON THIS DRAWING!
****IMPORTANT**** FURNISH THIS DRAWING TO ALL CONTRACTORS INCLUDING THE INSTALLERS

Trusses require extreme care in fabricating, handling, shipping, installing and bracing. Refer to and follow the latest edition of BCSI (Building Component Safety Information, by TPI and SBCA) for safety practices prior to performing these functions. Installers shall provide temporary bracing per BCSI. Unless noted otherwise, top chord shall have properly attached structural sheathing and bottom chord shall have a properly attached rigid ceiling. Locations shown for permanent lateral restraint of webs shall have bracing installed per BCSI sections B3, B7, or B10, as applicable. Apply plates to each face of truss and position as shown above and on the Joint Details, unless noted otherwise. Refer to drawings 160A-Z for standard plate positions. Refer to job's General Notes page for additional information.

Alpine, a division of ITW Building Components Group Inc. shall not be responsible for any deviation from this drawing, any failure to build the truss in conformance with ANSI/TPI 1, or for handling, shipping, installation and bracing of trusses. A seal on this drawing or cover page listing this drawing, indicates acceptance of professional engineering responsibility solely for the design shown. The suitability and use of this drawing for any structure is the responsibility of the Building Designer per ANSI/TPI 1 Sec.2.

For more information see these web sites: Alpine: www.alpineitw.com; TPI: www.tpinst.org; SBCA: www.sbcindustry.com; ICC: www.iccsafe.org

ALPINE
AN ITW COMPANY
6750 Forum Drive
Suite 305
Orlando FL, 32821

SEQN: 362262 / COMN FROM: CDM	Ply: 1 Qty: 2	**Job Number:** 20-4510 Lot 41 JL **Truss Label:** B01	Cust: R215 JRef: 1WXX2150001 T32 DrwNo: 231.20.1149.52686 KD / YK 08/18/2020

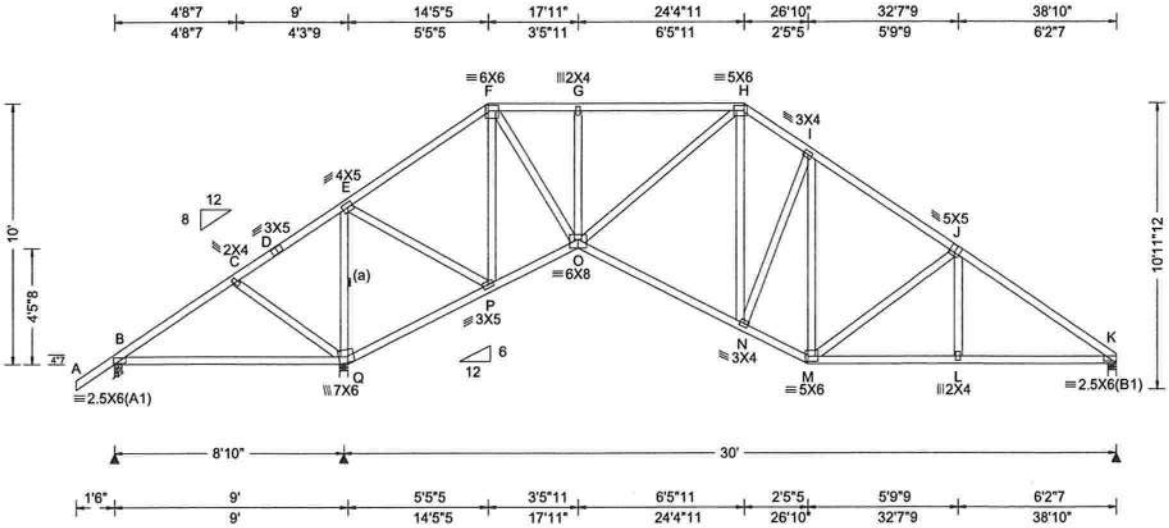

Loading Criteria (psf)

TCLL:	20.00
TCDL:	10.00
BCLL:	0.00
BCDL:	10.00
Des Ld:	40.00
NCBCLL:	10.00
Soffit:	2.00

Load Duration: 1.25
Spacing: 24.0 "

Wind Criteria
Wind Std: ASCE 7-10
Speed: 130 mph
Enclosure: Closed
Risk Category: II
EXP: C Kzt: NA
Mean Height: 15.00 ft
TCDL: 5.0 psf
BCDL: 5.0 psf
MWFRS Parallel Dist: h to 2h
C&C Dist a: 3.88 ft
Loc. from endwall: not in 9.00 ft
GCpi: 0.18
Wind Duration: 1.60

Snow Criteria (Pg,Pf in PSF)
Pg: NA Ct: NA CAT: NA
Pf: NA Ce: NA
Lu: NA Cs: NA
Snow Duration: NA

Building Code:
FBC 2017 RES
TPI Std: 2014
Rep Fac: Yes
FT/RT:20(0)/10(0)
Plate Type(s):
WAVE

Defl/CSI Criteria

PP Deflection in	loc	L/defl	L/#
VERT(LL): 0.055	N	999	360
VERT(CL): 0.118	N	999	240
HORZ(LL): 0.039	L	-	-
HORZ(TL): 0.082	L	-	-

Creep Factor: 2.0
Max TC CSI: 0.541
Max BC CSI: 0.540
Max Web CSI: 0.946

VIEW Ver: 19.02.02B.0122.15

▲ Maximum Reactions (lbs)

	Gravity			Non-Gravity		
Loc	R+	/ R-	/ Rh	/ Rw	/ U	/ RL
B	243	/-180	/-	/58	/23	/316
Q	2232	/-	/-	/1331	/75	/-
K	1144	/-	/-	/760	/44	/-

Wind reactions based on MWFRS
B Brg Width = 3.5 Min Req = 1.5
Q Brg Width = 4.0 Min Req = 2.6
K Brg Width = 4.0 Min Req = 1.5
Bearings B, Q, & K are a rigid surface.
Members not listed have forces less than 375#

Maximum Top Chord Forces Per Ply (lbs)

Chords	Tens.	Comp.	Chords	Tens.	Comp.
B - C	645	-86	G - H	284	-1053
C - D	733	-97	H - I	391	-1146
D - E	827	-86	I - J	372	-1254
E - F	194	-578	J - K	391	-1695
F - G	284	-1053			

Maximum Bot Chord Forces Per Ply (lbs)

Chords	Tens.	Comp.	Chords	Tens.	Comp.
B - Q	128	-497	N - M	1084	-108
Q - P	272	-756	M - L	1325	-234
P - O	453	-68	L - K	1327	-234
O - N	1062	-39			

Maximum Web Forces Per Ply (lbs)

Webs	Tens.	Comp.	Webs	Tens.	Comp.
E - Q	306	-1573	F - O	1200	-142
E - P	1167	-122	M - J	182	-464
F - P	122	-1008			

Lumber
Top chord: 2x4 SP #2;
Bot chord: 2x4 SP #2;
Webs: 2x4 SP #3;

Bracing
(a) Continuous lateral restraint equally spaced on member.

Wind
Wind loads based on MWFRS with additional C&C member design.

Additional Notes
Negative reaction(s) of -180# MAX. from a non-wind load case requires uplift connection. See Maximum Reactions.

Refer to DWG PB160101014 for piggyback details.

The overall height of this truss excluding overhang is 10-0-0.

YOONHWAK KIM
LICENSE
No. 86367
STATE OF
FLORIDA
PROFESSIONAL ENGINEER

FL REG# 278, Yoonhwak Kim, FL PE #86367
08/18/2020

****WARNING**** READ AND FOLLOW ALL NOTES ON THIS DRAWING!
****IMPORTANT**** FURNISH THIS DRAWING TO ALL CONTRACTORS INCLUDING THE INSTALLERS

Trusses require extreme care in fabricating, handling, shipping, installing and bracing. Refer to and follow the latest edition of BCSI (Building Component Safety Information, by TPI and SBCA) for safety practices prior to performing these functions. Installers shall provide temporary bracing per BCSI. Unless noted otherwise, top chord shall have properly attached structural sheathing and bottom chord shall have a properly attached rigid ceiling. Locations shown for permanent lateral restraint of webs shall have bracing installed per BCSI sections B3, B7, or B10, as applicable. Apply plates to each face of truss and position as shown above and on the Joint Details, unless noted otherwise. Refer to drawings 160A-Z for standard plate positions. Refer to job's General Notes page for additional information.

Alpine, a division of ITW Building Components Group Inc. shall not be responsible for any deviation from this drawing, any failure to build the truss in conformance with ANSI/TPI 1, or for handling, shipping, installation and bracing of trusses. A seal on this drawing or cover page listing this drawing, indicates acceptance of professional engineering responsibility solely for the design shown. The suitability and use of this drawing for any structure is the responsibility of the Building Designer per ANSI/TPI 1 Sec.2.

For more information see these web sites: Alpine: www.alpineitw.com; TPI: www.tpinst.org; SBCA: www.sbcindustry.com; ICC: www.iccsafe.org

ALPINE
AN ITW COMPANY
6750 Forum Drive
Suite 305
Orlando FL, 32821

SEQN: 362265 / COMN FROM: CDM	Ply: 1 Qty: 4	**Job Number:** 20-4510 Lot 41 JL **Truss Label:** B02	Cust: R 215 JRef: 1WXX2150001 T24 DrwNo: 231.20.1149.52530 KD / YK 08/18/2020

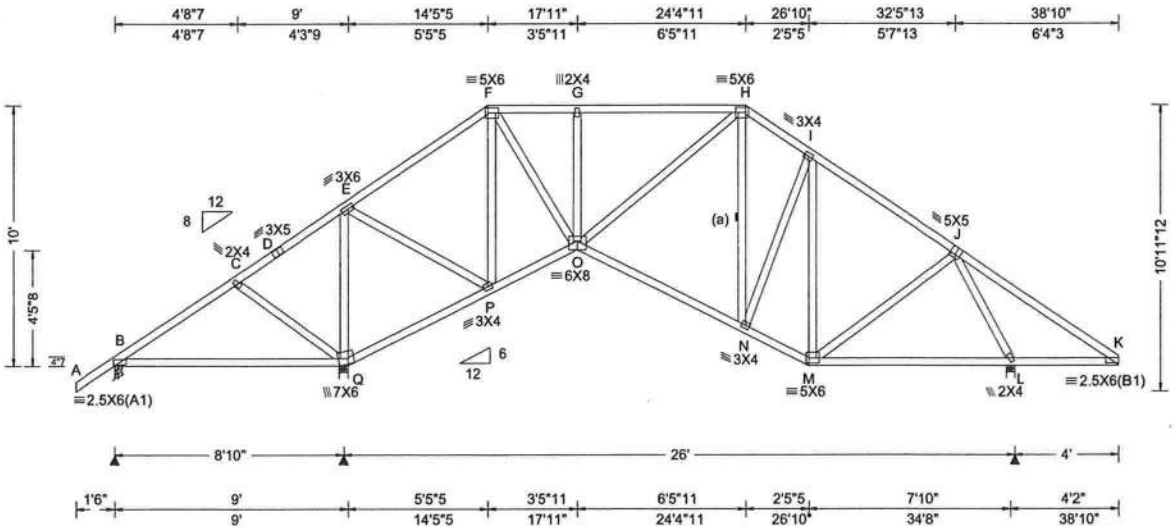

Loading Criteria (psf)

TCLL: 20.00
TCDL: 10.00
BCLL: 0.00
BCDL: 10.00
Des Ld: 40.00
NCBCLL: 10.00
Soffit: 2.00
Load Duration: 1.25
Spacing: 24.0 "

Wind Criteria

Wind Std: ASCE 7-10
Speed: 130 mph
Enclosure: Closed
Risk Category: II
EXP: C Kzt: NA
Mean Height: 15.44 ft
TCDL: 5.0 psf
BCDL: 5.0 psf
MWFRS Parallel Dist: h to 2h
C&C Dist a: 3.88 ft
Loc. from endwall: not in 9.00 ft
GCpi: 0.18
Wind Duration: 1.60

Snow Criteria (Pg,Pf in PSF)

Pg: NA Ct: NA CAT: NA
Pf: NA Ce: NA
Lu: NA Cs: NA
Snow Duration: NA

Building Code:
FBC 2017 RES
TPI Std: 2014
Rep Fac: Yes
FT/RT:20(0)/10(0)
Plate Type(s):
WAVE

Defl/CSI Criteria

PP Deflection in	loc	L/defl	L/#
VERT(LL): 0.037	G	999	360
VERT(CL): 0.079	G	999	240
HORZ(LL): 0.029	L	-	-
HORZ(TL): 0.063	L	-	-

Creep Factor: 2.0
Max TC CSI: 0.681
Max BC CSI: 0.548
Max Web CSI: 0.932

VIEW Ver: 19.02.02B.0122.15

▲ Maximum Reactions (lbs)

	Gravity			Non-Gravity		
Loc	R+	/ R-	/ Rh	/ Rw	/ U	/ RL
B	331	/-14	/-	/125	/77	/316
Q	1847	/-	/-	/1233	/-	/-
L	1380	/-	/-	/1030	/-	/-

Wind reactions based on MWFRS
B Brg Width = 3.5 Min Req = 1.5
Q Brg Width = 4.0 Min Req = 2.2
L Brg Width = 4.0 Min Req = 1.5
Bearings B, Q, & L are a rigid surface.
Members not listed have forces less than 375#

Maximum Top Chord Forces Per Ply (lbs)

Chords	Tens.	Comp.	Chords	Tens.	Comp.
C - D	448	-78	G - H	0	-929
D - E	542	-67	H - I	155	-852
E - F	68	-606	I - J	138	-869
F - G	0	-929	J - K	425	-228

Maximum Bot Chord Forces Per Ply (lbs)

Chords	Tens.	Comp.	Chords	Tens.	Comp.
Q - P	88	-486	N - M	718	0
P - O	481	-54	M - L	401	-1
O - N	785	0			

Maximum Web Forces Per Ply (lbs)

Webs	Tens.	Comp.	Webs	Tens.	Comp.
E - Q	0	-1317	F - O	951	0
E - P	925	0	M - I	0	-402
F - P	0	-783	J - L	243	-1342

Lumber

Top chord: 2x4 SP #2;
Bot chord: 2x4 SP #2;
Webs: 2x4 SP #3;

Bracing

(a) Continuous lateral restraint equally spaced on member.

Wind

Wind loads based on MWFRS with additional C&C member design.

Right cantilever is exposed to wind

Additional Notes

Refer to DWG PB160101014 for piggyback details.

The overall height of this truss excluding overhang is 10-0-0.

YOONHWAK KIM
LICENSE
No. 86367
STATE OF
FLORIDA
PROFESSIONAL ENGINEER

FL REG# 278, Yoonhwak Kim, FL PE #86367
08/18/2020

****WARNING**** READ AND FOLLOW ALL NOTES ON THIS DRAWING!
****IMPORTANT**** FURNISH THIS DRAWING TO ALL CONTRACTORS INCLUDING THE INSTALLERS

Trusses require extreme care in fabricating, handling, shipping, installing and bracing. Refer to and follow the latest edition of BCSI (Building Component Safety Information, by TPI and SBCA) for safety practices prior to performing these functions. Installers shall provide temporary bracing per BCSI. Unless noted otherwise, top chord shall have properly attached structural sheathing and bottom chord shall have a properly attached rigid ceiling. Locations shown for permanent lateral restraint of webs shall have bracing installed per BCSI sections B3, B7, or B10, as applicable. Apply plates to each face of truss and position as shown above and on the Joint Details, unless noted otherwise. Refer to drawings 160A-Z for standard plate positions. Refer to job's General Notes page for additional information.

Alpine, a division of ITW Building Components Group Inc. shall not be responsible for any deviation from this drawing, any failure to build the truss in conformance with ANSI/TPI 1, or for handling, shipping, installation and bracing of trusses. A seal on this drawing or cover page listing this drawing, indicates acceptance of professional engineering responsibility solely for the design shown. The suitability and use of this drawing for any structure is the responsibility of the Building Designer per ANSI/TPI 1 Sec.2.

For more information see these web sites: Alpine: www.alpineitw.com; TPI: www.tpinst.org; SBCA: www.sbcindustry.com; ICC: www.iccsafe.org

ALPINE
AN ITW COMPANY
6750 Forum Drive
Suite 305
Orlando FL, 32821

SEQN: 362268 / COMN FROM: CDM	Ply: 1 Qty: 2	**Job Number:** 20-4510 Lot 41 JL **Truss Label:** B03	Cust: R 215 JRef: 1WXX2150001 T3 DrwNo: 231.20.1149.52827 KD / YK 08/18/2020

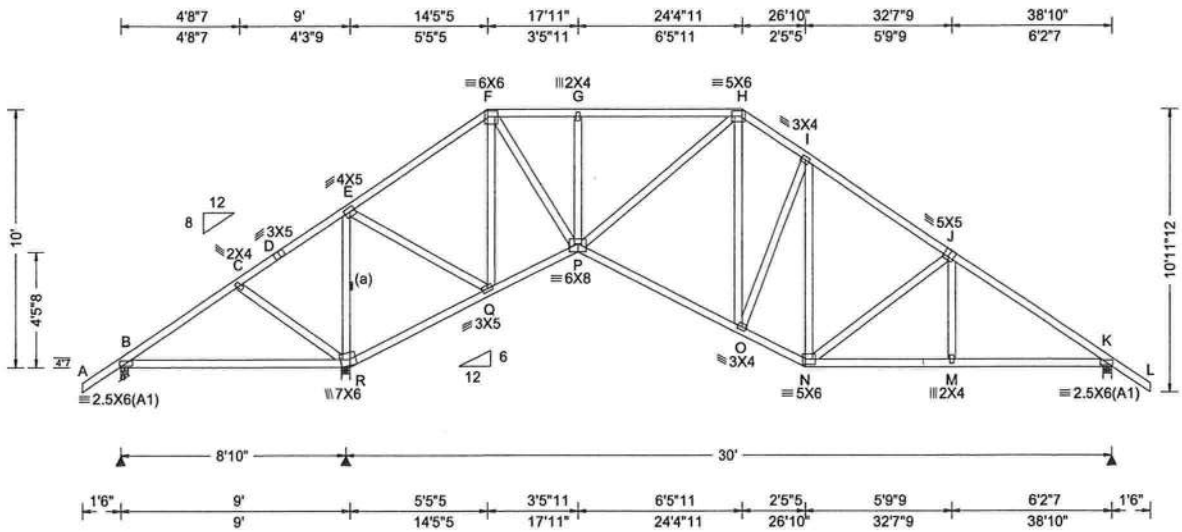

Loading Criteria (psf)

TCLL:	20.00
TCDL:	10.00
BCLL:	0.00
BCDL:	10.00
Des Ld:	40.00
NCBCLL:	10.00
Soffit:	2.00

Load Duration: 1.25
Spacing: 24.0 "

Wind Criteria
Wind Std: ASCE 7-10
Speed: 130 mph
Enclosure: Closed
Risk Category: II
EXP: C Kzt: NA
Mean Height: 15.00 ft
TCDL: 5.0 psf
BCDL: 5.0 psf
MWFRS Parallel Dist: h to 2h
C&C Dist a: 3.88 ft
Loc. from endwall: not in 9.00 ft
GCpi: 0.18
Wind Duration: 1.60

Snow Criteria (Pg,Pf in PSF)
Pg: NA Ct: NA CAT: NA
Pf: NA Ce: NA
Lu: NA Cs: NA
Snow Duration: NA

Building Code:
FBC 2017 RES
TPI Std: 2014
Rep Fac: Yes
FT/RT:20(0)/10(0)
Plate Type(s):
WAVE

Defl/CSI Criteria

PP Deflection in	loc	L/defl	L/#
VERT(LL): 0.056	O	999	360
VERT(CL): 0.119	O	999	240
HORZ(LL): 0.038	M	-	-
HORZ(TL): 0.081	M	-	-

Creep Factor: 2.0
Max TC CSI: 0.542
Max BC CSI: 0.540
Max Web CSI: 0.945

VIEW Ver: 19.02.02B.0122.15

▲ Maximum Reactions (lbs)

	Gravity			Non-Gravity		
Loc	R+	/ R-	/ Rh	/ Rw	/ U	/ RL
B	241	/-183	/-	/54	/32	/335
R	2233	/-	/-	/1343	/56	/-
K	1250	/-	/-	/857	/58	/-

Wind reactions based on MWFRS
B Brg Width = 3.5 Min Req = 1.5
R Brg Width = 4.0 Min Req = 2.6
K Brg Width = 4.0 Min Req = 1.5
Bearings B, R, & K are a rigid surface.
Members not listed have forces less than 375#

Maximum Top Chord Forces Per Ply (lbs)

Chords	Tens.	Comp.	Chords	Tens.	Comp.
B - C	651	-81	G - H	259	-1044
C - D	739	-72	H - I	388	-1138
D - E	833	-61	I - J	372	-1243
E - F	195	-571	J - K	372	-1671
F - G	259	-1044			

Maximum Bot Chord Forces Per Ply (lbs)

Chords	Tens.	Comp.	Chords	Tens.	Comp.
B - R	138	-502	O - N	1075	-78
R - Q	282	-762	N - M	1301	-195
Q - P	446	-108	M - K	1302	-195
P - O	1053	-5			

Maximum Web Forces Per Ply (lbs)

Webs	Tens.	Comp.	Webs	Tens.	Comp.
E - R	275	-1571	F - P	1194	-119
E - Q	1166	-100	N - J	157	-443
F - Q	102	-1007			

Lumber

Top chord: 2x4 SP #2;
Bot chord: 2x4 SP #2;
Webs: 2x4 SP #3;

Bracing

(a) Continuous lateral restraint equally spaced on member.

Wind

Wind loads based on MWFRS with additional C&C member design.

Additional Notes

Negative reaction(s) of -183# MAX. from a non-wind load case requires uplift connection. See Maximum Reactions.

Refer to DWG PB160101014 for piggyback details.

The overall height of this truss excluding overhang is 10-0-0.

YOONHWAK KIM
LICENSE
No. 86367
STATE OF FLORIDA
PROFESSIONAL ENGINEER

FL REG# 278, Yoonhwak Kim, FL PE #86367
08/18/2020

****WARNING**** READ AND FOLLOW ALL NOTES ON THIS DRAWING!
****IMPORTANT**** FURNISH THIS DRAWING TO ALL CONTRACTORS INCLUDING THE INSTALLERS

Trusses require extreme care in fabricating, handling, shipping, installing and bracing. Refer to and follow the latest edition of BCSI (Building Component Safety Information, by TPI and SBCA) for safety practices prior to performing these functions. Installers shall provide temporary bracing per BCSI. Unless noted otherwise, top chord shall have properly attached structural sheathing and bottom chord shall have a properly attached rigid ceiling. Locations shown for permanent lateral restraint of webs shall have bracing installed per BCSI sections B3, B7, or B10, as applicable. Apply plates to each face of truss and position as shown above and on the Joint Details, unless noted otherwise. Refer to drawings 160A-Z for standard plate positions. Refer to job's General Notes page for additional information.

Alpine, a division of ITW Building Components Group Inc. shall not be responsible for any deviation from this drawing, any failure to build the truss in conformance with ANSI/TPI 1, or for handling, shipping, installation and bracing of trusses. A seal on this drawing or cover page listing this drawing, indicates acceptance of professional engineering responsibility solely for the design shown. The suitability and use of this drawing for any structure is the responsibility of the Building Designer per ANSI/TPI 1 Sec.2.

For more information see these web sites: Alpine: www.alpineitw.com; TPI: www.tpinst.org; SBCA: www.sbcindustry.com; ICC: www.iccsafe.org

ALPINE
AN ITW COMPANY
6750 Forum Drive
Suite 305
Orlando FL, 32821

SEQN: 362271 / COMN FROM: CDM	Ply: 1 Qty: 1	**Job Number:** 20-4510 Lot 41 JL **Truss Label:** B04	Cust: R 215 JRef: 1WXX2150001 T31 DrwNo: 231.20.1149.52701 KD / YK 08/18/2020

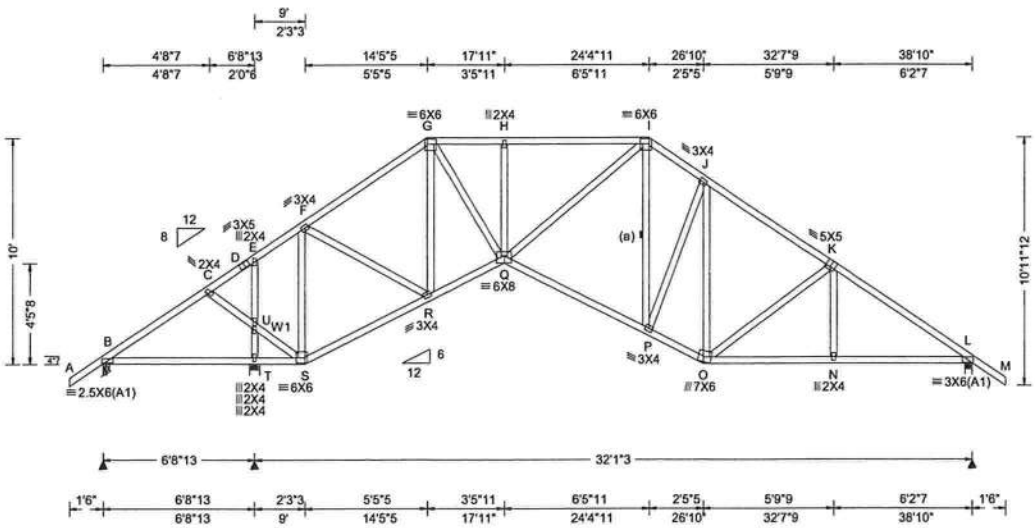

Loading Criteria (psf)	Wind Criteria	Snow Criteria (Pg,Pf in PSF)	Defl/CSI Criteria
TCLL: 20.00	Wind Std: ASCE 7-10	Pg: NA Ct: NA CAT: NA	PP Deflection in loc L/defl L/#
TCDL: 10.00	Speed: 130 mph	Pf: NA Ce: NA	VERT(LL): 0.144 H 999 360
BCLL: 0.00	Enclosure: Closed	Lu: NA Cs: NA	VERT(CL): 0.294 H 999 240
BCDL: 10.00	Risk Category: II	Snow Duration: NA	HORZ(LL): 0.093 N - -
Des Ld: 40.00	EXP: C Kzt: NA		HORZ(TL): 0.196 N - -
NCBCLL: 10.00	Mean Height: 15.00 ft	Building Code:	Creep Factor: 2.0
Soffit: 2.00	TCDL: 5.0 psf	FBC 2017 RES	Max TC CSI: 0.743
Load Duration: 1.25	BCDL: 5.0 psf	TPI Std: 2014	Max BC CSI: 0.696
Spacing: 24.0 "	MWFRS Parallel Dist: h to 2h	Rep Fac: Yes	Max Web CSI: 0.878
	C&C Dist a: 3.88 ft	FT/RT:20(0)/10(0)	
	Loc. from endwall: not in 9.00 ft	Plate Type(s):	
	GCpi: 0.18	WAVE	VIEW Ver: 19.02.02B.0122.15
	Wind Duration: 1.60		

▲ Maximum Reactions (lbs)

	Gravity			Non-Gravity		
Loc	R+	/ R-	/ Rh	/ Rw	/ U	/ RL
B	939	/-	/-	/546	/26	/335
T	987	/-	/-	/648	/15	/-
L	1586	/-	/-	/998	/45	/-

Wind reactions based on MWFRS
B Brg Width = 3.5 Min Req = 1.5
T Brg Width = 5.7 Min Req = 1.5
L Brg Width = 4.0 Min Req = 1.9
Bearings B, T, & L are a rigid surface.
Members not listed have forces less than 375#

Maximum Top Chord Forces Per Ply (lbs)

Chords	Tens.	Comp.	Chords	Tens.	Comp.
B - C	316	-1142	G - H	536	-2370
C - D	333	-1138	H - I	536	-2370
D - E	336	-1079	I - J	531	-1826
E - F	401	-1331	J - K	492	-1838
F - G	478	-1974	K - L	489	-2251

Maximum Bot Chord Forces Per Ply (lbs)

Chords	Tens.	Comp.	Chords	Tens.	Comp.
B - T	854	-176	Q - P	1688	-137
T - S	854	-176	P - O	1627	-194
S - R	1153	-137	O - N	1780	-295
R - Q	1760	-92	N - L	1782	-295

Maximum Web Forces Per Ply (lbs)

Webs	Tens.	Comp.	Webs	Tens.	Comp.
U - E	112	-500	G - Q	1452	-175
T - U	163	-752	Q - I	1138	-89
F - S	102	-818	O - J	36	-398
F - R	676	0	O - K	153	-422
G - R	0	-488			

Lumber

Top chord: 2x4 SP #2;
Bot chord: 2x4 SP #2;
Webs: 2x4 SP #3; W1 2x4 SP #2;

Bracing

(a) Continuous lateral restraint equally spaced on member.

Wind

Wind loads based on MWFRS with additional C&C member design.

Additional Notes

Refer to DWG PB160101014 for piggyback details.

The overall height of this truss excluding overhang is 10-0-0.

YOONHWAK KIM
LICENSE
No. 86367
STATE OF
FLORIDA
PROFESSIONAL ENGINEER

FL REG# 278, Yoonhwak Kim, FL PE #86367
08/18/2020

****WARNING**** READ AND FOLLOW ALL NOTES ON THIS DRAWING!
****IMPORTANT**** FURNISH THIS DRAWING TO ALL CONTRACTORS INCLUDING THE INSTALLERS

Trusses require extreme care in fabricating, handling, shipping, installing and bracing. Refer to and follow the latest edition of BCSI (Building Component Safety Information, by TPI and SBCA) for safety practices prior to performing these functions. Installers shall provide temporary bracing per BCSI. Unless noted otherwise, top chord shall have properly attached structural sheathing and bottom chord shall have a properly attached rigid ceiling. Locations shown for permanent lateral restraint of webs shall have bracing installed per BCSI sections B3, B7, or B10, as applicable. Apply plates to each face of truss and position as shown above and on the Joint Details, unless noted otherwise. Refer to drawings 160A-Z for standard plate positions. Refer to job's General Notes page for additional information.

Alpine, a division of ITW Building Components Group Inc. shall not be responsible for any deviation from this drawing, any failure to build the truss in conformance with ANSI/TPI 1, or for handling, shipping, installation and bracing of trusses. A seal on this drawing or cover page listing this drawing, indicates acceptance of professional engineering responsibility solely for the design shown. The suitability and use of this drawing for any structure is the responsibility of the Building Designer per ANSI/TPI 1 Sec.2.

For more information see these web sites: Alpine: www.alpineitw.com; TPI: www.tpinst.org; SBCA: www.sbcindustry.com; ICC: www.iccsafe.org

ALPINE AN ITW COMPANY
6750 Forum Drive
Suite 305
Orlando FL, 32821

SEQN: 362274 / COMN FROM: CDM	Ply: 1 Qty: 1	**Job Number:** 20-4510 Lot 41 JL **Truss Label:** B05	Cust: R 215 JRef:1WXX2150001 T7 DrwNo: 231.20.1149.52717 KD / YK 08/18/2020

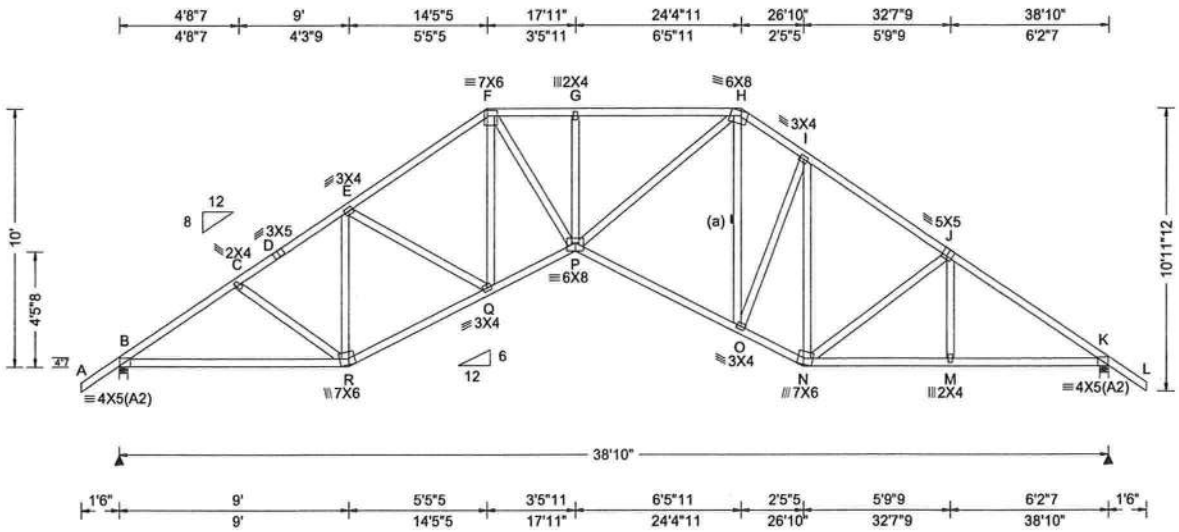

Loading Criteria (psf)

TCLL:	20.00
TCDL:	10.00
BCLL:	0.00
BCDL:	10.00
Des Ld:	40.00
NCBCLL:	10.00
Soffit:	2.00

Load Duration: 1.25
Spacing: 24.0 "

Wind Criteria
Wind Std: ASCE 7-10
Speed: 130 mph
Enclosure: Closed
Risk Category: II
EXP: C Kzt: NA
Mean Height: 15.00 ft
TCDL: 5.0 psf
BCDL: 5.0 psf
MWFRS Parallel Dist: h to 2h
C&C Dist a: 3.88 ft
Loc. from endwall: not in 9.00 ft
GCpi: 0.18
Wind Duration: 1.60

Snow Criteria (Pg,Pf in PSF)
Pg: NA Ct: NA CAT: NA
Pf: NA Ce: NA
Lu: NA Cs: NA
Snow Duration: NA

Building Code:
FBC 2017 RES
TPI Std: 2014
Rep Fac: Yes
FT/RT:20(0)/10(0)
Plate Type(s):
WAVE

Defl/CSI Criteria

PP Deflection in	loc	L/defl	L/#
VERT(LL): 0.194	G	999	360
VERT(CL): 0.407	G	999	240
HORZ(LL): 0.124	M	-	-
HORZ(TL): 0.261	M	-	-

Creep Factor: 2.0
Max TC CSI: 0.742
Max BC CSI: 0.830
Max Web CSI: 0.654

VIEW Ver: 19.02.02B.0122.15

▲ Maximum Reactions (lbs)

	Gravity			Non-Gravity		
Loc	R+	/ R-	/ Rh	/ Rw	/ U	/ RL
B	1758	/-	/-	/1084	/35	/335
K	1754	/-	/-	/1080	/36	/-

Wind reactions based on MWFRS
B Brg Width = 4.0 Min Req = 2.1
K Brg Width = 4.0 Min Req = 2.1
Bearings B & K are a rigid surface.
Members not listed have forces less than 375#

Maximum Top Chord Forces Per Ply (lbs)

Chords	Tens.	Comp.	Chords	Tens.	Comp.
B - C	544	-2548	G - H	651	-3040
C - D	520	-2327	H - I	590	-2171
D - E	538	-2269	I - J	538	-2137
E - F	601	-2684	J - K	536	-2542
F - G	651	-3040			

Maximum Bot Chord Forces Per Ply (lbs)

Chords	Tens.	Comp.	Chords	Tens.	Comp.
B - R	2042	-334	O - N	1904	-241
R - Q	2124	-291	N - M	2021	-337
Q - P	2410	-203	M - K	2023	-336
P - O	2007	-192			

Maximum Web Forces Per Ply (lbs)

Webs	Tens.	Comp.	Webs	Tens.	Comp.
E - R	103	-684	N - I	30	-525
F - P	1621	-203	N - J	151	-411
P - H	1633	-174			

Lumber

Top chord: 2x4 SP #2;
Bot chord: 2x4 SP #2;
Webs: 2x4 SP #3;

Bracing

(a) Continuous lateral restraint equally spaced on member.

Wind

Wind loads based on MWFRS with additional C&C member design.

Additional Notes

Refer to DWG PB160101014 for piggyback details.

The overall height of this truss excluding overhang is 10-0-0.

YOONHWAK KIM
LICENSE
No. 86367
STATE OF FLORIDA
PROFESSIONAL ENGINEER

FL REG# 278, Yoonhwak Kim, FL PE #86367
08/18/2020

****WARNING**** READ AND FOLLOW ALL NOTES ON THIS DRAWING!
****IMPORTANT**** FURNISH THIS DRAWING TO ALL CONTRACTORS INCLUDING THE INSTALLERS

Trusses require extreme care in fabricating, handling, shipping, installing and bracing. Refer to and follow the latest edition of BCSI (Building Component Safety Information, by TPI and SBCA) for safety practices prior to performing these functions. Installers shall provide temporary bracing per BCSI. Unless noted otherwise, top chord shall have properly attached structural sheathing and bottom chord shall have a properly attached rigid ceiling. Locations shown for permanent lateral restraint of webs shall have bracing installed per BCSI sections B3, B7, or B10, as applicable. Apply plates to each face of truss and position as shown above and on the Joint Details, unless noted otherwise. Refer to drawings 160A-Z for standard plate positions. Refer to job's General Notes page for additional information.

Alpine, a division of ITW Building Components Group Inc. shall not be responsible for any deviation from this drawing, any failure to build the truss in conformance with ANSI/TPI 1, or for handling, shipping, installation and bracing of trusses. A seal on this drawing or cover page listing this drawing, indicates acceptance of professional engineering responsibility solely for the design shown. The suitability and use of this drawing for any structure is the responsibility of the Building Designer per ANSI/TPI 1 Sec.2.

For more information see these web sites: Alpine: www.alpineitw.com; TPI: www.tpinst.org; SBCA: www.sbcindustry.com; ICC: www.iccsafe.org

ALPINE
AN ITW COMPANY
6750 Forum Drive
Suite 305
Orlando FL, 32821

SEQN: 362277 / COMN FROM: CDM	Ply: 1 Qty: 3	**Job Number:** 20-4510 Lot 41 JL **Truss Label:** B06	Cust: R 215 JRef:1WXX2150001 T33 DrwNo: 231.20.1149.52967 KD / YK 08/18/2020

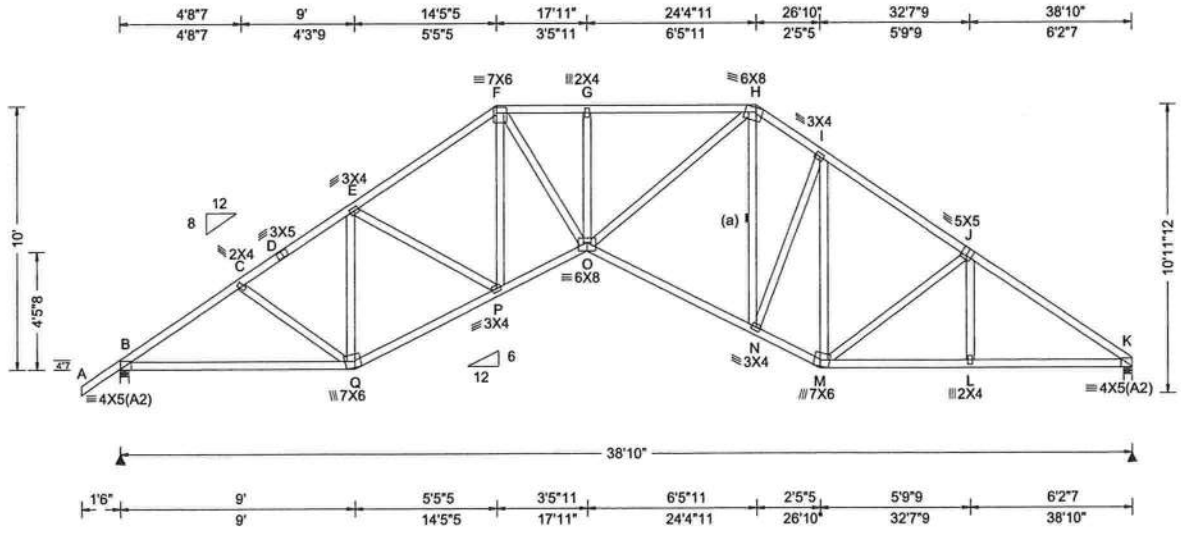

Loading Criteria (psf)

TCLL: 20.00
TCDL: 10.00
BCLL: 0.00
BCDL: 10.00
Des Ld: 40.00
NCBCLL: 10.00
Soffit: 2.00
Load Duration: 1.25
Spacing: 24.0 "

Wind Criteria

Wind Std: ASCE 7-10
Speed: 130 mph
Enclosure: Closed
Risk Category: II
EXP: C Kzt: NA
Mean Height: 15.00 ft
TCDL: 5.0 psf
BCDL: 5.0 psf
MWFRS Parallel Dist: h to 2h
C&C Dist a: 3.88 ft
Loc. from endwall: not in 9.00 ft
GCpi: 0.18
Wind Duration: 1.60

Snow Criteria (Pg,Pf in PSF)

Pg: NA Ct: NA CAT: NA
Pf: NA Ce: NA
Lu: NA Cs: NA
Snow Duration: NA

Building Code:
FBC 2017 RES
TPI Std: 2014
Rep Fac: Yes
FT/RT:20(0)/10(0)
Plate Type(s):
WAVE

Defl/CSI Criteria

PP Deflection in	loc	L/defl	L/#
VERT(LL): 0.192	G	999	360
VERT(CL): 0.407	G	999	240
HORZ(LL): 0.124	L	-	-
HORZ(TL): 0.261	L	-	-

Creep Factor: 2.0
Max TC CSI: 0.743
Max BC CSI: 0.830
Max Web CSI: 0.648

VIEW Ver: 19.02.02B.0122.15

▲ Maximum Reactions (lbs)

	Gravity			Non-Gravity		
Loc	R+	/ R-	/ Rh	/ Rw	/ U	/ RL
B	1760	/-	/-	/1084	/36	/316
K	1649	/-	/-	/989	/25	/-

Wind reactions based on MWFRS
B Brg Width = 4.0 Min Req = 2.1
K Brg Width = 4.0 Min Req = 1.9
Bearings B & K are a rigid surface.
Members not listed have forces less than 375#

Maximum Top Chord Forces Per Ply (lbs)

Chords	Tens.	Comp.	Chords	Tens.	Comp.
B - C	549	-2552	G - H	691	-3048
C - D	526	-2332	H - I	602	-2179
D - E	544	-2273	I - J	554	-2147
E - F	624	-2690	J - K	568	-2566
F - G	691	-3048			

Lumber

Top chord: 2x4 SP #2;
Bot chord: 2x4 SP #2;
Webs: 2x4 SP #3;

Bracing

(a) Continuous lateral restraint equally spaced on member.

Wind

Wind loads based on MWFRS with additional C&C member design.

Additional Notes

Refer to DWG PB160101014 for piggyback details.

The overall height of this truss excluding overhang is 10-0-0.

Maximum Bot Chord Forces Per Ply (lbs)

Chords	Tens.	Comp.	Chords	Tens.	Comp.
B - Q	2045	-391	N - M	1913	-278
Q - P	2128	-353	M - L	2045	-381
P - O	2415	-272	L - K	2047	-381
O - N	2014	-234			

Maximum Web Forces Per Ply (lbs)

Webs	Tens.	Comp.	Webs	Tens.	Comp.
E - Q	128	-686	M - I	41	-519
F - O	1627	-230	M - J	176	-432
O - H	1634	-216			

YOONHWAK KIM
LICENSE
No. 86367
STATE OF
FLORIDA
PROFESSIONAL ENGINEER

FL REG# 278, Yoonhwak Kim, FL PE #86367
08/18/2020

****WARNING**** READ AND FOLLOW ALL NOTES ON THIS DRAWING!
****IMPORTANT**** FURNISH THIS DRAWING TO ALL CONTRACTORS INCLUDING THE INSTALLERS

Trusses require extreme care in fabricating, handling, shipping, installing and bracing. Refer to and follow the latest edition of BCSI (Building Component Safety Information, by TPI and SBCA) for safety practices prior to performing these functions. Installers shall provide temporary bracing per BCSI. Unless noted otherwise, top chord shall have properly attached structural sheathing and bottom chord shall have a properly attached rigid ceiling. Locations shown for permanent lateral restraint of webs shall have bracing installed per BCSI sections B3, B7, or B10, as applicable. Apply plates to each face of truss and position as shown above and on the Joint Details, unless noted otherwise. Refer to drawings 160A-Z for standard plate positions. Refer to job's General Notes page for additional information.

Alpine, a division of ITW Building Components Group Inc. shall not be responsible for any deviation from this drawing, any failure to build the truss in conformance with ANSI/TPI 1, or for handling, shipping, installation and bracing of trusses. A seal on this drawing or cover page listing this drawing, indicates acceptance of professional engineering responsibility solely for the design shown. The suitability and use of this drawing for any structure is the responsibility of the Building Designer per ANSI/TPI 1 Sec.2.

For more information see these web sites: Alpine: www.alpineitw.com; TPI: www.tpinst.org; SBCA: www.sbcindustry.com; ICC: www.iccsafe.org

ALPINE AN ITW COMPANY
6750 Forum Drive
Suite 305
Orlando FL, 32821

SEQN: 362280 / SPEC FROM: CDM	Ply: 1 Qty: 1	**Job Number:** 20-4510 Lot 41 JL **Truss Label:** B07	Cust: R 215 JRef: 1WXX2150001 T8 DrwNo: 231.20.1149.52670 KD / YK 08/18/2020

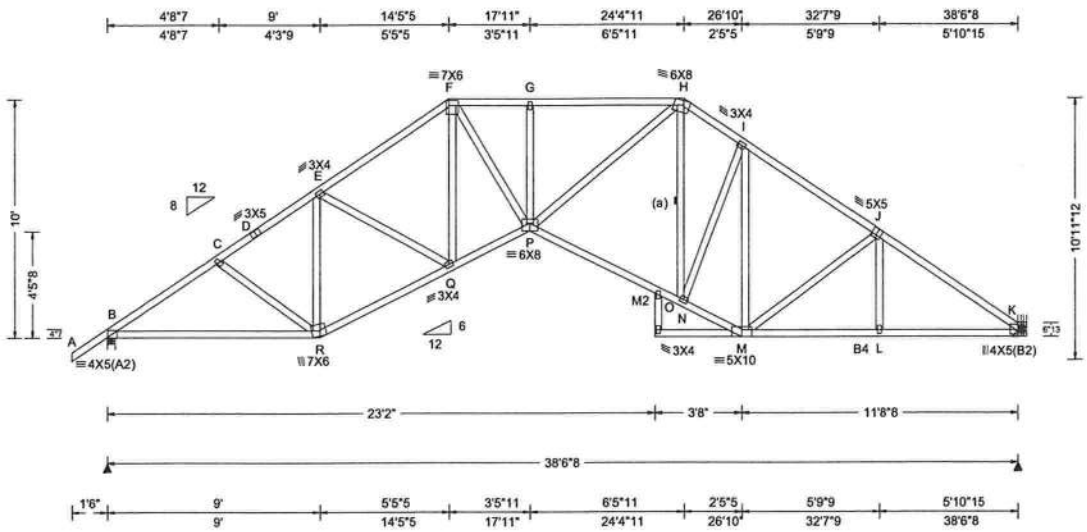

Loading Criteria (psf)
TCLL: 20.00
TCDL: 10.00
BCLL: 0.00
BCDL: 10.00
Des Ld: 40.00
NCBCLL: 10.00
Soffit: 2.00
Load Duration: 1.25
Spacing: 24.0 "

Wind Criteria
Wind Std: ASCE 7-10
Speed: 130 mph
Enclosure: Closed
Risk Category: II
EXP: C Kzt: NA
Mean Height: 15.00 ft
TCDL: 5.0 psf
BCDL: 5.0 psf
MWFRS Parallel Dist: h to 2h
C&C Dist a: 3.85 ft
Loc. from endwall: not in 9.00 ft
GCpi: 0.18
Wind Duration: 1.60

Snow Criteria (Pg,Pf in PSF)
Pg: NA Ct: NA CAT: NA
Pf: NA Ce: NA
Lu: NA Cs: NA
Snow Duration: NA

Building Code:
FBC 2017 RES
TPI Std: 2014
Rep Fac: Yes
FT/RT:20(0)/10(0)
Plate Type(s):
WAVE

Defl/CSI Criteria

PP Deflection in	loc	L/defl	L/#
VERT(LL): 0.193	G	999	360
VERT(CL): 0.408	G	999	240
HORZ(LL): 0.126	L	-	-
HORZ(TL): 0.266	L	-	-

Creep Factor: 2.0
Max TC CSI: 0.740
Max BC CSI: 0.827
Max Web CSI: 0.663

VIEW Ver: 19.02.02B.0122.15

▲ Maximum Reactions (lbs)

Loc	Gravity R+	Gravity / R-	Gravity / Rh	Non-Gravity / Rw	Non-Gravity / U	Non-Gravity / RL
B	1751	/-	/-	/1075	/38	/324
K	1633	/-	/-	/970	/27	/-

Wind reactions based on MWFRS
B Brg Width = 4.0 Min Req = 2.1
K Brg Width = - Min Req = -
Bearing B is a rigid surface.
Members not listed have forces less than 375#

Maximum Top Chord Forces Per Ply (lbs)

Chords	Tens.	Comp.	Chords	Tens.	Comp.
B - C	541	-2538	G - H	696	-3020
C - D	519	-2317	H - I	597	-2150
D - E	536	-2258	I - J	547	-2111
E - F	624	-2668	J - K	547	-2474
F - G	696	-3020			

Maximum Bot Chord Forces Per Ply (lbs)

Chords	Tens.	Comp.	Chords	Tens.	Comp.
B - R	2033	-403	O - N	1917	-247
R - Q	2114	-367	N - M	1874	-273
Q - P	2396	-294	M - L	1958	-369
P - O	1986	-246	L - K	1958	-368

Maximum Web Forces Per Ply (lbs)

Webs	Tens.	Comp.	Webs	Tens.	Comp.
E - R	135	-679	P - H	1631	-227
F - P	1608	-238	M - I	48	-532

Lumber
Top chord: 2x4 SP #2;
Bot chord: 2x4 SP #2; B4 2x4 SP M-31;
Webs: 2x4 SP #3; M2 2x4 SP #2;
Filler: 2x4 SP #2;

Bracing
(a) Continuous lateral restraint equally spaced on member.

Plating Notes
All plates are 2X4 except as noted.

Hangers / Ties
(J) Hanger Support Required, by others

Purlins
Laterally brace BC at 24" oc in lieu of rigid ceiling.
Laterally brace BC above filler at 24" oc.

Wind
Wind loads based on MWFRS with additional C&C member design.

Additional Notes
The overall height of this truss excluding overhang is 10-0-0.

YOONHWAK KIM
LICENSE
No. 86367
STATE OF FLORIDA
PROFESSIONAL ENGINEER

FL REG# 278, Yoonhwak Kim, FL PE #86367
08/18/2020

****WARNING**** READ AND FOLLOW ALL NOTES ON THIS DRAWING!
****IMPORTANT**** FURNISH THIS DRAWING TO ALL CONTRACTORS INCLUDING THE INSTALLERS

Trusses require extreme care in fabricating, handling, shipping, installing and bracing. Refer to and follow the latest edition of BCSI (Building Component Safety Information, by TPI and SBCA) for safety practices prior to performing these functions. Installers shall provide temporary bracing per BCSI. Unless noted otherwise, top chord shall have properly attached structural sheathing and bottom chord shall have a properly attached rigid ceiling. Locations shown for permanent lateral restraint of webs shall have bracing installed per BCSI sections B3, B7, or B10, as applicable. Apply plates to each face of truss and position as shown above and on the Joint Details, unless noted otherwise. Refer to drawings 160A-Z for standard plate positions. Refer to job's General Notes page for additional information.

Alpine, a division of ITW Building Components Group Inc. shall not be responsible for any deviation from this drawing, any failure to build the truss in conformance with ANSI/TPI 1, or for handling, shipping, installation and bracing of trusses. A seal on this drawing or cover page listing this drawing, indicates acceptance of professional engineering responsibility solely for the design shown. The suitability and use of this drawing for any structure is the responsibility of the Building Designer per ANSI/TPI 1 Sec.2.

For more information see these web sites: Alpine: www.alpineitw.com; TPI: www.tpinst.org; SBCA: www.sbcindustry.com; ICC: www.iccsafe.org

ALPINE AN ITW COMPANY
6750 Forum Drive
Suite 305
Orlando FL, 32821

SEQN: 362220 / COMN FROM: CDM	Ply: 1 Qty: 11	**Job Number:** 20-4510 Lot 41 JL **Truss Label:** C01	Cust: R 215 JRef: 1WXX2150001 T1 DrwNo: 231.20.1149.52826 KD / YK 08/18/2020

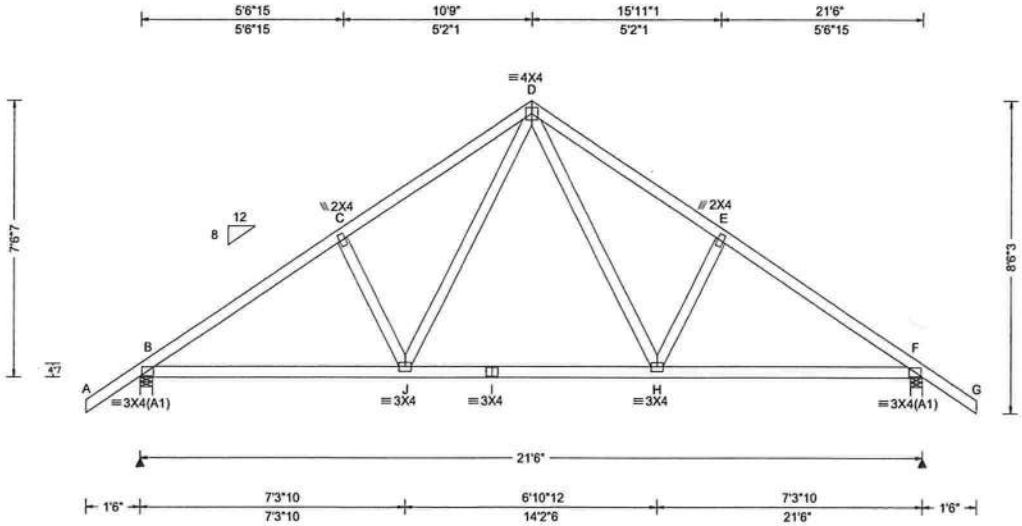

Loading Criteria (psf)

TCLL:	20.00
TCDL:	10.00
BCLL:	0.00
BCDL:	10.00
Des Ld:	40.00
NCBCLL:	10.00
Soffit:	2.00

Load Duration: 1.25
Spacing: 24.0 "

Wind Criteria
Wind Std: ASCE 7-10
Speed: 130 mph
Enclosure: Closed
Risk Category: II
EXP: C Kzt: NA
Mean Height: 15.00 ft
TCDL: 5.0 psf
BCDL: 5.0 psf
MWFRS Parallel Dist: 0 to h/2
C&C Dist a: 3.00 ft
Loc. from endwall: Any
GCpi: 0.18
Wind Duration: 1.60

Snow Criteria (Pg,Pf in PSF)
Pg: NA Ct: NA CAT: NA
Pf: NA Ce: NA
Lu: NA Cs: NA
Snow Duration: NA

Building Code:
FBC 2017 RES
TPI Std: 2014
Rep Fac: Yes
FT/RT:20(0)/10(0)
Plate Type(s):
WAVE

Defl/CSI Criteria

PP Deflection in	loc	L/defl	L/#
VERT(LL): 0.039	J	999	360
VERT(CL): 0.076	J	999	240
HORZ(LL): 0.017	H	-	-
HORZ(TL): 0.033	H	-	-

Creep Factor: 2.0
Max TC CSI: 0.302
Max BC CSI: 0.583
Max Web CSI: 0.206

VIEW Ver: 19.02.02B.0122.15

▲ Maximum Reactions (lbs)

	Gravity			Non-Gravity		
Loc	R+	/ R-	/ Rh	/ Rw	/ U	/ RL
B	1068	/-	/-	/622	/166	/251
F	1068	/-	/-	/511	/166	/-

Wind reactions based on MWFRS
B Brg Width = 4.0 Min Req = 1.5
F Brg Width = 4.0 Min Req = 1.5
Bearings B & F are a rigid surface.
Members not listed have forces less than 375#

Maximum Top Chord Forces Per Ply (lbs)

Chords	Tens.	Comp.	Chords	Tens.	Comp.
B - C	340	- 1374	D - E	400	- 1227
C - D	401	- 1228	E - F	339	- 1373

Maximum Bot Chord Forces Per Ply (lbs)

Chords	Tens.	Comp.	Chords	Tens.	Comp.
B - J	1065	- 153	I - H	724	- 7
J - I	724	- 7	H - F	1065	- 162

Maximum Web Forces Per Ply (lbs)

Webs	Tens.	Comp.	Webs	Tens.	Comp.
J - D	511	- 167	D - H	510	- 167

Lumber

Top chord: 2x4 SP #2;
Bot chord: 2x4 SP #2;
Webs: 2x4 SP #3;

Loading

Truss passed check for 20 psf additional bottom chord live load in areas with 42"-high x 24"-wide clearance.

Wind

Wind loads based on MWFRS with additional C&C member design.

Additional Notes

The overall height of this truss excluding overhang is 7-6-7.

YOONHWAK KIM
LICENSE
No. 86367
STATE OF
FLORIDA
PROFESSIONAL ENGINEER

FL REG# 278, Yoonhwak Kim, FL PE #86367
08/18/2020

****WARNING**** READ AND FOLLOW ALL NOTES ON THIS DRAWING!
****IMPORTANT**** FURNISH THIS DRAWING TO ALL CONTRACTORS INCLUDING THE INSTALLERS

Trusses require extreme care in fabricating, handling, shipping, installing and bracing. Refer to and follow the latest edition of BCSI (Building Component Safety Information, by TPI and SBCA) for safety practices prior to performing these functions. Installers shall provide temporary bracing per BCSI. Unless noted otherwise, top chord shall have properly attached structural sheathing and bottom chord shall have a properly attached rigid ceiling. Locations shown for permanent lateral restraint of webs shall have bracing installed per BCSI sections B3, B7, or B10, as applicable. Apply plates to each face of truss and position as shown above and on the Joint Details, unless noted otherwise. Refer to drawings 160A-Z for standard plate positions. Refer to job's General Notes page for additional information.

Alpine, a division of ITW Building Components Group Inc. shall not be responsible for any deviation from this drawing, any failure to build the truss in conformance with ANSI/TPI 1, or for handling, shipping, installation and bracing of trusses. A seal on this drawing or cover page listing this drawing, indicates acceptance of professional engineering responsibility solely for the design shown. The suitability and use of this drawing for any structure is the responsibility of the Building Designer per ANSI/TPI 1 Sec.2.

For more information see these web sites: Alpine: www.alpineitw.com; TPI: www.tpinst.org; SBCA: www.sbcindustry.com; ICC: www.iccsafe.org

ALPINE
AN ITW COMPANY
6750 Forum Drive
Suite 305
Orlando FL, 32821

SEQN: 362235 / COMN FROM: CDM	Ply: 3 Qty: 1	**Job Number:** 20-4510 Lot 41 JL **Truss Label:** C02	Cust: R 215 JRef:1WXX2150001 T11 DrwNo: 231.20.1149.52779 KD / YK 08/18/2020

3 Complete Trusses Required

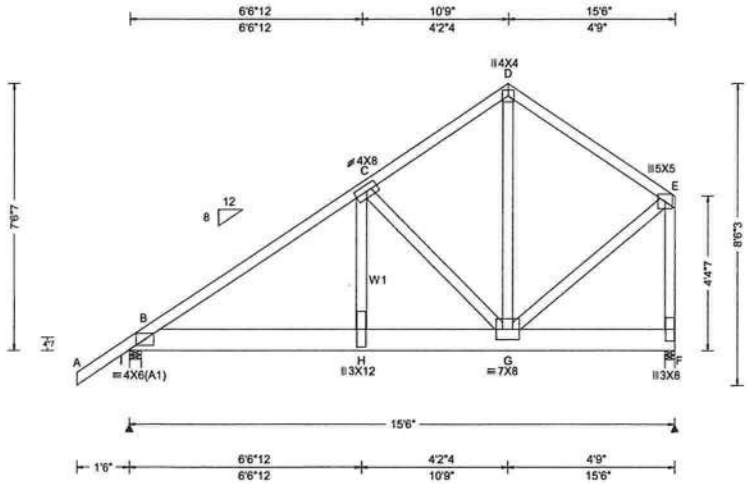

Loading Criteria (psf)	**Wind Criteria**	**Snow Criteria** (Pg,Pf in PSF)	**Defl/CSI Criteria**
TCLL: 20.00 TCDL: 10.00 BCLL: 0.00 BCDL: 10.00 Des Ld: 40.00 NCBCLL: 0.00 Soffit: 2.00 Load Duration: 1.25 Spacing: 24.0 "	Wind Std: ASCE 7-10 Speed: 130 mph Enclosure: Closed Risk Category: II EXP: C Kzt: NA Mean Height: 15.00 ft TCDL: 5.0 psf BCDL: 5.0 psf MWFRS Parallel Dist: 0 to h/2 C&C Dist a: 3.00 ft Loc. from endwall: not in 9.00 ft GCpi: 0.18 Wind Duration: 1.60	Pg: NA Ct: NA CAT: NA Pf: NA Ce: NA Lu: NA Cs: NA Snow Duration: NA Building Code: FBC 2017 RES TPI Std: 2014 Rep Fac: Yes FT/RT:20(0)/10(0) Plate Type(s): WAVE	PP Deflection in loc L/defl L/# VERT(LL): 0.055 H 999 360 VERT(CL): 0.110 H 999 240 HORZ(LL): -0.012 D - - HORZ(TL): 0.024 D - - Creep Factor: 2.0 Max TC CSI: 0.345 Max BC CSI: 0.231 Max Web CSI: 0.652 VIEW Ver: 19.02.02B.0122.15

▲ Maximum Reactions (lbs)

	Gravity			Non-Gravity		
Loc	R+	/ R-	/ Rh	/ Rw	/ U	/ RL
I	5428	/-	/-	/-	/914	/-
F	7719	/-	/-	/-	/1056	/-

Wind reactions based on MWFRS
I Brg Width = 4.0 Min Req = 1.5
F Brg Width = 3.5 Min Req = 2.1
Bearings I & F are a rigid surface.
Members not listed have forces less than 375#

Maximum Top Chord Forces Per Ply (lbs)

Chords	Tens.	Comp.	Chords	Tens.	Comp.
B - C	503	-3013	D - E	261	-1620
C - D	261	-1618			

Maximum Bot Chord Forces Per Ply (lbs)

Chords	Tens.	Comp.	Chords	Tens.	Comp.
B - H	2477	-408	H - G	2449	-404

Maximum Web Forces Per Ply (lbs)

Webs	Tens.	Comp.	Webs	Tens.	Comp.
H - C	1839	-297	G - E	1711	-270
C - G	280	-1623	E - F	327	-2013
D - G	1664	-243			

Lumber

Top chord: 2x4 SP #2;
Bot chord: 2x8 SP 2400f-2.0E;
Webs: 2x4 SP #3; W1 2x4 SP #2;

+ PROVIDE (2) 0.131"X3.0" GUN NAILS IN AREA OF CONCENTRATED LOAD OPPOSITE HANGER, WITHOUT SPLITTING LUMBER.

Nailnote

Nail Schedule:0.128"x3", min. nails
Top Chord: 1 Row @12.00" o.c.
Bot Chord: 2 Rows @ 4.00" o.c. (Each Row)
Webs : 1 Row @ 4" o.c.
Repeat nailing as each layer is applied. Use equal spacing between rows and stagger nails in each row to avoid splitting.

Special Loads

-----(Lumber Dur.Fac.=1.25 / Plate Dur.Fac.=1.25)

TC: From	64 plf at	-1.50 to	64 plf at	15.50
BC: From	5 plf at	-1.50 to	5 plf at	0.00
BC: From	20 plf at	0.00 to	20 plf at	6.56
BC: From	10 plf at	6.56 to	10 plf at	15.50

BC: 5023 lb Conc. Load at 6.56 +
BC: 1725 lb Conc. Load at 8.56,10.56,12.56
BC: 1633 lb Conc. Load at 14.56

Wind

Wind loads and reactions based on MWFRS.

Right end vertical not exposed to wind pressure.

Additional Notes

The overall height of this truss excluding overhang is 7-6-7.

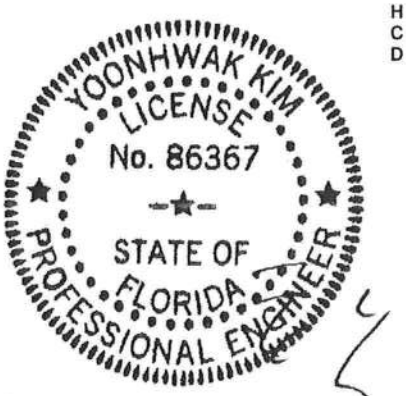

FL REG# 278, Yoonhwak Kim, FL PE #86367
08/18/2020

****WARNING**** READ AND FOLLOW ALL NOTES ON THIS DRAWING!
****IMPORTANT**** FURNISH THIS DRAWING TO ALL CONTRACTORS INCLUDING THE INSTALLERS

Trusses require extreme care in fabricating, handling, shipping, installing and bracing. Refer to and follow the latest edition of BCSI (Building Component Safety Information, by TPI and SBCA) for safety practices prior to performing these functions. Installers shall provide temporary bracing per BCSI. Unless noted otherwise, top chord shall have properly attached structural sheathing and bottom chord shall have a properly attached rigid ceiling. Locations shown for permanent lateral restraint of webs shall have bracing installed per BCSI sections B3, B7, or B10, as applicable. Apply plates to each face of truss and position as shown above and on the Joint Details, unless noted otherwise. Refer to drawings 160A-Z for standard plate positions. Refer to job's General Notes page for additional information.

Alpine, a division of ITW Building Components Group Inc. shall not be responsible for any deviation from this drawing, any failure to build the truss in conformance with ANSI/TPI 1, or for handling, shipping, installation and bracing of trusses. A seal on this drawing or cover page listing this drawing, indicates acceptance of professional engineering responsibility solely for the design shown. The suitability and use of this drawing for any structure is the responsibility of the Building Designer per ANSI/TPI 1 Sec.2.

For more information see these web sites: Alpine: www.alpineitw.com; TPI: www.tpinst.org; SBCA: www.sbcindustry.com; ICC: www.iccsafe.org

ALPINE
AN ITW COMPANY
6750 Forum Drive
Suite 305
Orlando FL, 32821

SEQN: 362249 GABL FROM: CDM	Ply: 1 Qty: 1	**Job Number:** 20-4510 Lot 41 JL **Truss Label:** C03	Cust: R 215 JRef: 1WXX2150001 T2 DrwNo: 231.20.1153.33710 KD / YK 08/18/2020

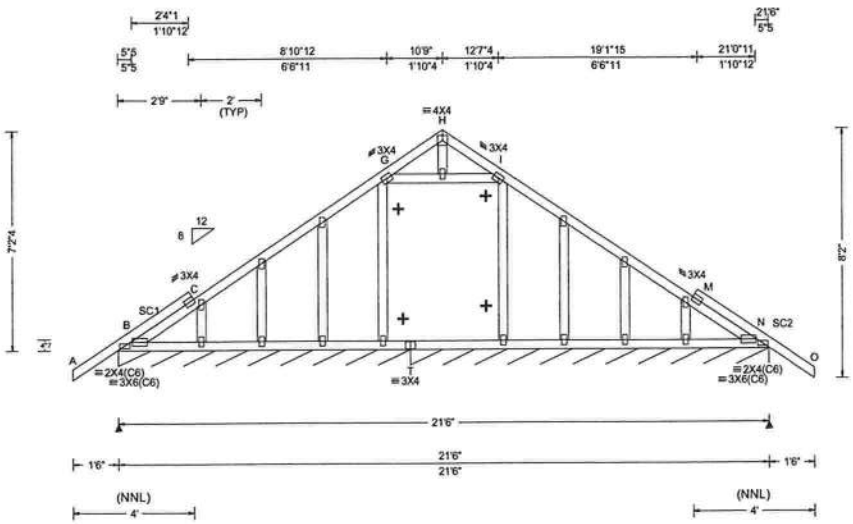

Loading Criteria (psf)	**Wind Criteria**	**Snow Criteria** (Pg,Pf in PSF)	**Defl/CSI Criteria**	**▲ Maximum Reactions (lbs), or *=PLF**
TCLL: 20.00 TCDL: 10.00 BCLL: 0.00 BCDL: 10.00 Des Ld: 40.00 NCBCLL: 10.00 Soffit: 2.00 Load Duration: 1.25 Spacing: 24.0 "	Wind Std: ASE 7-10 Speed: 130 mph Enclosure: Closed Risk Category: II EXP: C Kzt: NA Mean Height: 15.00 ft TCDL: 5.0 psf BCDL: 5.0 psf MWFRS Parallel Dist: 0 to h/2 C&C Dist a: 3.00 ft Loc. from endwall: Any GCpi: 0.18 Wind Duration: 1.60	Pg: NA Ct: NA CAT: NA Pf: NA Ce: NA Lu: NA Cs: NA Snow Duration: NA Building Code: FBC 2017 RES TPI Std: 2014 Rep Fac: Varies by Ld Case FT/RT:20(0)/10(0) Plate Type(s): WAVE	PP Deflection in loc L/defl L/# VERT(LL): 0.002 H 999 360 VERT(CL): 0.005 H 999 240 HORZ(LL): 0.001 L - - HORZ(TL): 0.002 L - - Creep Factor: 2.0 Max TC CSI: 0.273 Max BC CSI: 0.108 Max Web CSI: 0.117 VIEW Ver: 19.02.02B.0122.15	Gravity / Non-Gravity Loc R+ / R- / Rh / Rw / U / RL B* 129 /- /- /71 /- /6 T* 105 /- /- /56 /- /- Wind reactions based on MWFRS B Brg Width = 116 Min Req = - T Brg Width = 142 Min Req = - Bearings B & T are a rigid surface. Members not listed have forces less than 375#

Lumber

Top chord: 2x4 SP #2;
Bot chord: 2x4 SP #2;
Webs: 2x4 SP #3;
Stack Chord: SC1 2x4 SP #2;
Stack Chord: SC2 2x4 SP #2;

+ Member to be laterally braced for horizontal wind loads. bracing system to be desiged and furnished by others.

Plating Notes

All plates are 2X4 except as noted.

Loading

Truss designed to support 1-0-0 top chord outlookers and cladding load not to exceed 5.00 PSF one face and 24.0" span opposite face. Top chord must not be cut or notched, unless specified otherwise.

Wind

Wind loads based on MWFRS with additional C&C member design.

Additional Notes

See DWGS A14015ENC101014 & GBLLETIN0118 for gable wind bracing and other requirements.

Stacked top chord must NOT be notched or cut in area (NNL). Dropped top chord braced at 24" oc intervals. Attach stacked top chord (SC) to dropped top chord in notchable area using 3x4 tie-plates 24" oc. Center plate on stacked/dropped chord interface, plate length perpendicular to chord length. Splice top chord in notchable area using 3x6.

The overall height of this truss excluding overhang is 7-2-4.

YOONHWAK KIM
LICENSE
No. 86367
STATE OF
FLORIDA
PROFESSIONAL ENGINEER

FL REG# 278, Yoonhwak Kim, FL PE #86367
08/18/2020

****WARNING**** READ AND FOLLOW ALL NOTES ON THIS DRAWING!
****IMPORTANT**** FURNISH THIS DRAWING TO ALL CONTRACTORS INCLUDING THE INSTALLERS

Trusses require extreme care in fabricating, handling, shipping, installing and bracing. Refer to and follow the latest edition of BCSI (Building Component Safety Information, by TPI and SBCA) for safety practices prior to performing these functions. Installers shall provide temporary bracing per BCSI. Unless noted otherwise, top chord shall have properly attached structural sheathing and bottom chord shall have a properly attached rigid ceiling. Locations shown for permanent lateral restraint of webs shall have bracing installed per BCSI sections B3, B7, or B10, as applicable. Apply plates to each face of truss and position as shown above and on the Joint Details, unless noted otherwise. Refer to drawings 160A-Z for standard plate positions. Refer to job's General Notes page for additional information.

Alpine, a division of ITW Building Components Group Inc. shall not be responsible for any deviation from this drawing, any failure to build the truss in conformance with ANSI/TPI 1, or for handling, shipping, installation and bracing of trusses. A seal on this drawing or cover page listing this drawing, indicates acceptance of professional engineering responsibility solely for the design shown. The suitability and use of this drawing for any structure is the responsibility of the Building Designer per ANSI/TPI 1 Sec.2.

For more information see these web sites: Alpine: www.alpineitw.com; TPI: www.tpinst.org; SBCA: www.sbcindustry.com; ICC: www.iccsafe.org

ALPINE
AN ITW COMPANY
6750 Forum Drive
Suite 305
Orlando FL, 32821

SEQN: 362242 COMN FROM: CDM	Ply: 1 Qty: 2	**Job Number:** 20-4510 Lot 41 JL **Truss Label:** D01	Cust: R 215 JRef:1WXX2150001 T6 DrwNo: 231.20.1153.36390 KD / YK 08/18/2020

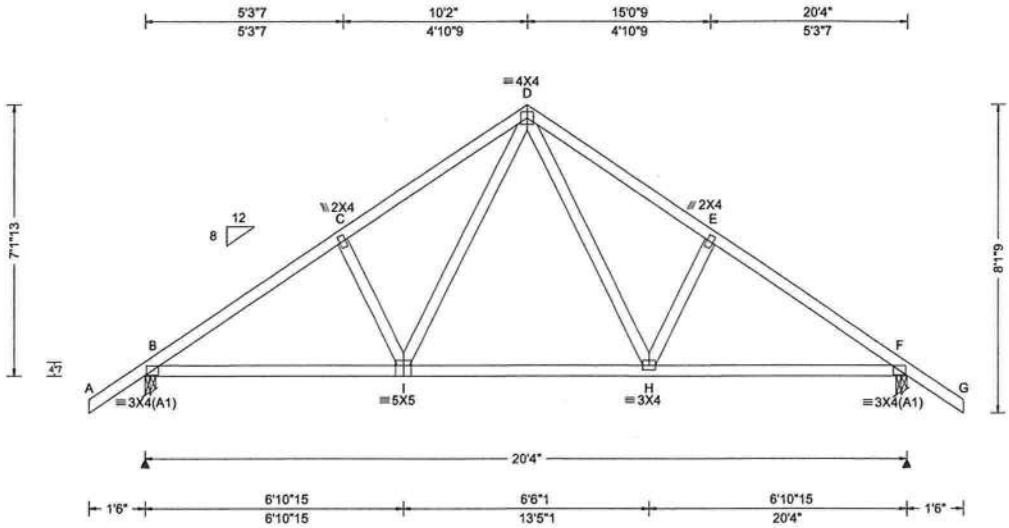

Loading Criteria (psf)

TCLL:	20.00
TCDL:	10.00
BCLL:	0.00
BCDL:	10.00
Des Ld:	40.00
NCBCLL:	10.00
Soffit:	2.00

Load Duration: 1.25
Spacing: 24.0 "

Wind Criteria
Wind Std: ASCE 7-10
Speed: 130 mph
Enclosure: Closed
Risk Category: II
EXP: C Kzt: NA
Mean Height: 15.00 ft
TCDL: 5.0 psf
BCDL: 5.0 psf
MWFRS Parallel Dist: 0 to h/2
C&C Dist a: 3.00 ft
Loc. from endwall: Any
GCpi: 0.18
Wind Duration: 1.60

Snow Criteria (Pg,Pf in PSF)
Pg: NA Ct: NA CAT: NA
Pf: NA Ce: NA
Lu: NA Cs: NA
Snow Duration: NA

Building Code:
FBC 2017 RES
TPI Std: 2014
Rep Fac: Yes
FT/RT:20(0)/10(0)
Plate Type(s):
WAVE

Defl/CSI Criteria

PP Deflection in	loc	L/defl	L/#
VERT(LL): 0.035	H	999	360
VERT(CL): 0.068	H	999	240
HORZ(LL): 0.015	H	-	-
HORZ(TL): 0.029	H	-	-

Creep Factor: 2.0
Max TC CSI: 0.282
Max BC CSI: 0.526
Max Web CSI: 0.180

VIEW Ver: 19.02.02B.0122.15

▲Maximum Reactions (lbs)

	Gravity			Non-Gravity		
Loc	R+	/ R-	/ Rh	/ Rw	/ U	/ RL
B	1011	/-	/-	/593	/158	/240
F	1011	/-	/-	/593	/158	/-

Wind reactions based on MWFRS
B Brg Width = 3.5 Min Req = 1.5
F Brg Width = 3.5 Min Req = 1.5
Bearings B & F are a rigid surface.
Members not listed have forces less than 375#

Maximum Top Chord Forces Per Ply (lbs)

Chords	Tens.	Comp.	Chords	Tens.	Comp.
B - C	319	-1282	D - E	376	-1145
C - D	376	-1144	E - F	318	-1283

Maximum Bot Chord Forces Per Ply (lbs)

Chords	Tens.	Comp.	Chords	Tens.	Comp.
B - I	992	-139	H - F	993	-149
I - H	676	-39			

Maximum Web Forces Per Ply (lbs)

Webs	Tens.	Comp.	Webs	Tens.	Comp.
I - D	471	-157	D - H	473	-156

Lumber
Top chord: 2x4 SP #2;
Bot chord: 2x4 SP #2;
Webs: 2x4 SP #3;

Loading
Truss passed check for 20 psf additional bottom chord live load in areas with 42"-high x 24"-wide clearance.

Wind
Wind loads based on MWFRS with additional C&C member design.

Additional Notes
The overall height of this truss excluding overhang is 7-1-13.

YOONHWAK KIM
LICENSE
No. 86367
STATE OF
FLORIDA
PROFESSIONAL ENGINEER

FL REG# 278, Yoonhwak Kim, FL PE #86367
08/18/2020

****WARNING**** READ AND FOLLOW ALL NOTES ON THIS DRAWING!
****IMPORTANT**** FURNISH THIS DRAWING TO ALL CONTRACTORS INCLUDING THE INSTALLERS

Trusses require extreme care in fabricating, handling, shipping, installing and bracing. Refer to and follow the latest edition of BCSI (Building Component Safety Information, by TPI and SBCA) for safety practices prior to performing these functions. Installers shall provide temporary bracing per BCSI. Unless noted otherwise, top chord shall have properly attached structural sheathing and bottom chord shall have a properly attached rigid ceiling. Locations shown for permanent lateral restraint of webs shall have bracing installed per BCSI sections B3, B7, or B10, as applicable. Apply plates to each face of truss and position as shown above and on the Joint Details, unless noted otherwise. Refer to drawings 160A-Z for standard plate positions. Refer to job's General Notes page for additional information.

Alpine, a division of ITW Building Components Group Inc. shall not be responsible for any deviation from this drawing, any failure to build the truss in conformance with ANSI/TPI 1, or for handling, shipping, installation and bracing of trusses. A seal on this drawing or cover page listing this drawing, indicates acceptance of professional engineering responsibility solely for the design shown. The suitability and use of this drawing for any structure is the responsibility of the Building Designer per ANSI/TPI 1 Sec.2.

For more information see these web sites: Alpine: www.alpineitw.com; TPI: www.tpinst.org; SBCA: www.sbcindustry.com; ICC: www.iccsafe.org

ALPINE
AN ITW COMPANY
6750 Forum Drive
Suite 305
Orlando FL, 32821

SEQN: 362246 GABL FROM: CDM	Ply: 1 Qty: 1	**Job Number:** 20-4510 Lot 41 JL **Truss Label:** D02	Cust: R 215 JRef: 1WXX2150001 T9 DrwNo: 231.20.1153.59699 KD / YK 08/18/2020

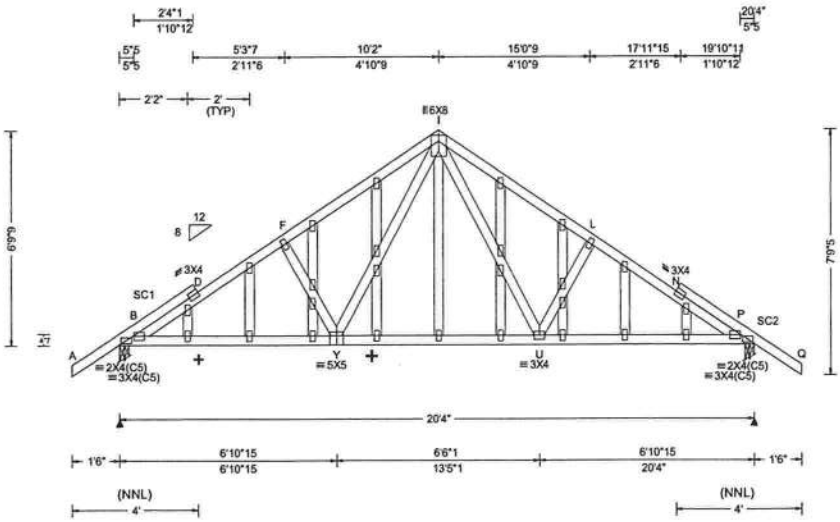

Loading Criteria (psf)

TCLL:	20.00
TCDL:	10.00
BCLL:	0.00
BCDL:	10.00
Des Ld:	40.00
NCBCLL:	10.00
Soffit:	2.00

Load Duration: 1.25
Spacing: 24.0 "

Wind Criteria
Wind Std: ASCE 7-10
Speed: 130 mph
Enclosure: Closed
Risk Category: II
EXP: C Kzt: NA
Mean Height: 15.00 ft
TCDL: 5.0 psf
BCDL: 5.0 psf
MWFRS Parallel Dist: 0 to h/2
C&C Dist a: 3.00 ft
Loc. from endwall: Any
GCpi: 0.18
Wind Duration: 1.60

Snow Criteria (Pg,Pf in PSF)
Pg: NA Ct: NA CAT: NA
Pf: NA Ce: NA
Lu: NA Cs: NA
Snow Duration: NA

Building Code:
FBC 2017 RES
TPI Std: 2014
Rep Fac: Varies by Ld Case
FT/RT:20(0)/10(0)
Plate Type(s):
WAVE

Defl/CSI Criteria

PP Deflection in	loc	L/defl	L/#
VERT(LL): 0.047	AA	999	360
VERT(CL): 0.105	AA	999	240
HORZ(LL): 0.023	D	-	-
HORZ(TL): 0.053	D	-	-

Creep Factor: 2.0
Max TC CSI: 0.441
Max BC CSI: 0.584
Max Web CSI: 0.333

VIEW Ver: 19.02.02B.0122.15

▲ Maximum Reactions (lbs)

	Gravity			Non-Gravity		
Loc	R+	/ R-	/ Rh	/ Rw	/ U	/ RL
B	1176	/-	/-	/649	/-	/60
P	1176	/-	/-	/649	/-	/-

Wind reactions based on MWFRS
B Brg Width = 3.5 Min Req = 1.5
P Brg Width = 3.5 Min Req = 1.5
Bearings B & P are a rigid surface.
Members not listed have forces less than 375#

Maximum Top Chord Forces Per Ply (lbs)

Chords	Tens.	Comp.	Chords	Tens.	Comp.
B - D	60	-442	I - L	229	-1392
B - D	49	-1165	L - N	132	-1513
D - F	71	-1513	N - P	0	-442
F - I	85	-1391	N - P	156	-1165

Maximum Bot Chord Forces Per Ply (lbs)

Chords	Tens.	Comp.	Chords	Tens.	Comp.
B - Y	1263	0	U - P	1263	-27
Y - U	828	0			

Maximum Web Forces Per Ply (lbs)

Webs	Tens.	Comp.	Webs	Tens.	Comp.
F - Y	0	-406	I - U	542	-244
Y - I	540	0	U - L	183	-403

Lumber
Top chord: 2x4 SP #2;
Bot chord: 2x4 SP #2;
Webs: 2x4 SP #3;
Stack Chord: SC1 2x4 SP #2;
Stack Chord: SC2 2x4 SP #2;

Plating Notes
All plates are 2X4 except as noted.

Loading
Truss designed to support 1-0-0 top chord outlookers and cladding load not to exceed 5.00 PSF one face and 24.0" span opposite face. Top chord must not be cut or notched, unless specified otherwise.

Purlins
In lieu of structural panels use purlins to brace TC @ 24" oc.

Wind
Wind loads based on MWFRS with additional C&C member design.

+ Member to be laterally braced for horizontal wind loads. bracing system to be desiged and furnished by others.

Additional Notes
See DWGS A14015ENC101014 & GBLLETIN0118 for gable wind bracing and other requirements.

Stacked top chord must NOT be notched or cut in area (NNL). Dropped top chord braced at 24" oc intervals. Attach stacked top chord (SC) to dropped top chord in notchable area using 3x4 tie-plates 24" oc. Center plate on stacked/dropped chord interface, plate length perpendicular to chord length. Splice top chord in **notchable area using 3x6.**

The overall height of this truss including overhang is 6-9-9.

YOONHWAK KIM
LICENSE
No. 86367
STATE OF FLORIDA
PROFESSIONAL ENGINEER

FL REG# 278, Yoonhwak Kim, FL PE #86367
08/18/2020

****WARNING**** READ AND FOLLOW ALL NOTES ON THIS DRAWING!
****IMPORTANT**** FURNISH THIS DRAWING TO ALL CONTRACTORS INCLUDING THE INSTALLERS

Trusses require extreme care in fabricating, handling, shipping, installing and bracing. Refer to and follow the latest edition of BCSI (Building Component Safety Information, by TPI and SBCA) for safety practices prior to performing these functions. Installers shall provide temporary bracing per BCSI. Unless noted otherwise, top chord shall have properly attached structural sheathing and bottom chord shall have a properly attached rigid ceiling. Locations shown for permanent lateral restraint of webs shall have bracing installed per BCSI sections B3, B7, or B10, as applicable. Apply plates to each face of truss and position as shown above and on the Joint Details, unless noted otherwise. Refer to drawings 160A-Z for standard plate positions. Refer to job's General Notes page for additional information.

Alpine, a division of ITW Building Components Group Inc. shall not be responsible for any deviation from this drawing, any failure to build the truss in conformance with ANSI/TPI 1, or for handling, shipping, installation and bracing of trusses. A seal on this drawing or cover page listing this drawing, indicates acceptance of professional engineering responsibility solely for the design shown. The suitability and use of this drawing for any structure is the responsibility of the Building Designer per ANSI/TPI 1 Sec.2.

For more information see these web sites: Alpine: www.alpineitw.com; TPI: www.tpinst.org; SBCA: www.sbcindustry.com; ICC: www.iccsafe.org

ALPINE
AN ITW COMPANY
6750 Forum Drive
Suite 305
Orlando FL, 32821

SEQN: 362143 / COMN FROM: CDM	Ply: 1 Qty: 1	**Job Number:** 20-4510 Lot 41 JL **Truss Label:** G01	Cust: R 215 JRef: 1WXX2150001 T10 DrwNo: 231.20.1153.59759 KD / YK 08/18/2020

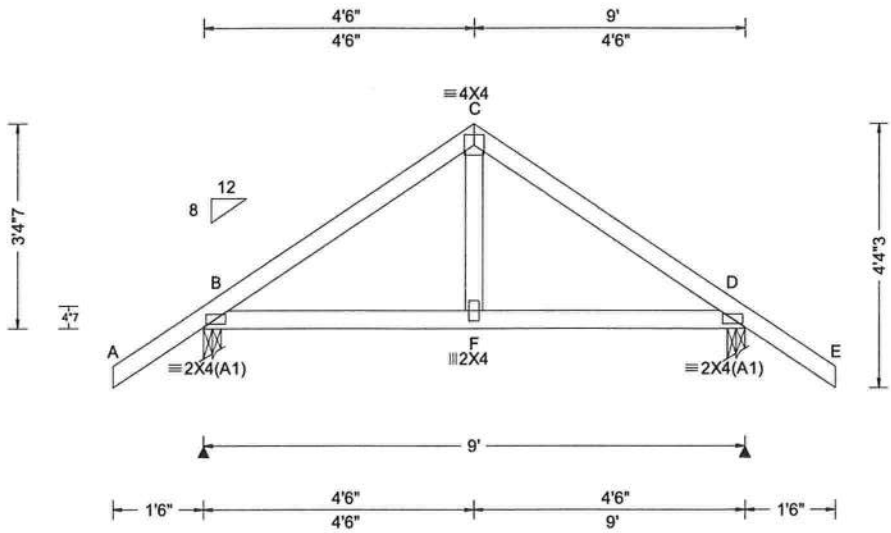

Loading Criteria (psf)	**Wind Criteria**	**Snow Criteria** (Pg,Pf in PSF)	**Defl/CSI Criteria**	**▲ Maximum Reactions (lbs)**
TCLL: 20.00 TCDL: 10.00 BCLL: 0.00 BCDL: 10.00 Des Ld: 40.00 NCBCLL: 10.00 Soffit: 2.00 Load Duration: 1.25 Spacing: 24.0 "	Wind Std: ASCE 7-10 Speed: 130 mph Enclosure: Closed Risk Category: II EXP: C Kzt: NA Mean Height: 15.00 ft TCDL: 5.0 psf BCDL: 5.0 psf MWFRS Parallel Dist: 0 to h/2 C&C Dist a: 3.00 ft Loc. from endwall: Any GCpi: 0.18 Wind Duration: 1.60	Pg: NA Ct: NA CAT: NA Pf: NA Ce: NA Lu: NA Cs: NA Snow Duration: NA Building Code: FBC 2017 RES TPI Std: 2014 Rep Fac: Yes FT/RT:20(0)/10(0) Plate Type(s): WAVE	PP Deflection in loc L/defl L/# VERT(LL): 0.004 F 999 360 VERT(CL): 0.008 F 999 240 HORZ(LL): 0.002 F - - HORZ(TL): 0.003 F - - Creep Factor: 2.0 Max TC CSI: 0.188 Max BC CSI: 0.186 Max Web CSI: 0.072 VIEW Ver: 19.02.02B.0122.15	

Loc	R+ (Gravity)	R- (Gravity)	Rh (Gravity)	Rw (Non-Gravity)	U (Non-Gravity)	RL (Non-Gravity)
B	481	/-	/-	/319	/82	/135
D	481	/-	/-	/319	/82	/-

Wind reactions based on MWFRS
B Brg Width = 3.5 Min Req = 1.5
D Brg Width = 3.5 Min Req = 1.5
Bearings B & D are a rigid surface.
Members not listed have forces less than 375#

Maximum Top Chord Forces Per Ply (lbs)

Chords	Tens.	Comp.	Chords	Tens.	Comp.
B - C	114	-395	C - D	115	-395

Lumber

Top chord: 2x4 SP #2;
Bot chord: 2x4 SP #2;
Webs: 2x4 SP #3;

Wind

Wind loads based on MWFRS with additional C&C member design.

Additional Notes

The overall height of this truss excluding overhang is 3-4-7.

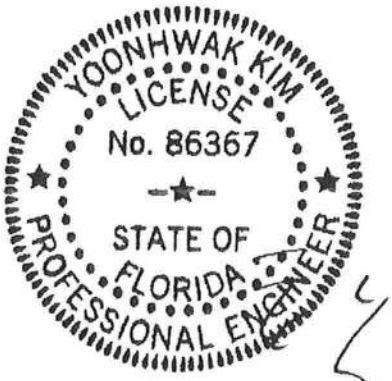

FL REG# 278, Yoonhwak Kim, FL PE #86367
08/18/2020

****WARNING**** READ AND FOLLOW ALL NOTES ON THIS DRAWING!
****IMPORTANT**** FURNISH THIS DRAWING TO ALL CONTRACTORS INCLUDING THE INSTALLERS

Trusses require extreme care in fabricating, handling, shipping, installing and bracing. Refer to and follow the latest edition of BCSI (Building Component Safety Information, by TPI and SBCA) for safety practices prior to performing these functions. Installers shall provide temporary bracing per BCSI. Unless noted otherwise, top chord shall have properly attached structural sheathing and bottom chord shall have a properly attached rigid ceiling. Locations shown for permanent lateral restraint of webs shall have bracing installed per BCSI sections B3, B7, or B10, as applicable. Apply plates to each face of truss and position as shown above and on the Joint Details, unless noted otherwise. Refer to drawings 160A-Z for standard plate positions. Refer to job's General Notes page for additional information.

Alpine, a division of ITW Building Components Group Inc. shall not be responsible for any deviation from this drawing, any failure to build the truss in conformance with ANSI/TPI 1, or for handling, shipping, installation and bracing of trusses. A seal on this drawing or cover page listing this drawing, indicates acceptance of professional engineering responsibility solely for the design shown. The suitability and use of this drawing for any structure is the responsibility of the Building Designer per ANSI/TPI 1 Sec.2.

For more information see these web sites: Alpine: www.alpineitw.com; TPI: www.tpinst.org; SBCA: www.sbcindustry.com; ICC: www.iccsafe.org

ALPINE
AN ITW COMPANY
6750 Forum Drive
Suite 305
Orlando FL, 32821

SEQN: 362253 / GABL FROM: CDM	Ply: 1 Qty: 1	**Job Number:** 20-4510 Lot 41 JL **Truss Label:** G02	Cust: R 215 JRef: 1WXX2150001 T19 DrwNo: 231.20.1153.59713 KD / YK 08/18/2020

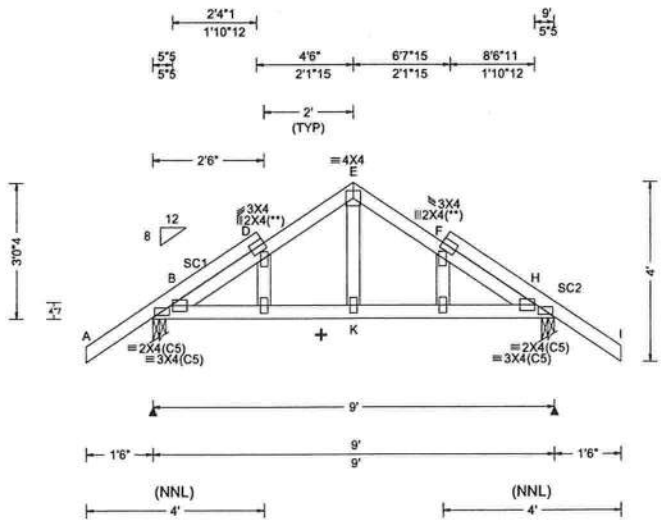

Loading Criteria (psf)	**Wind Criteria**	**Snow Criteria** (Pg,Pf in PSF)	**Defl/CSI Criteria**
TCLL: 20.00 TCDL: 10.00 BCLL: 0.00 BCDL: 10.00 Des Ld: 40.00 NCBCLL: 10.00 Soffit: 2.00 Load Duration: 1.25 Spacing: 24.0 "	Wind Std: ASCE 7-10 Speed: 130 mph Enclosure: Closed Risk Category: II EXP: C Kzt: NA Mean Height: 15.00 ft TCDL: 5.0 psf BCDL: 5.0 psf MWFRS Parallel Dist: 0 to h/2 C&C Dist a: 3.00 ft Loc. from endwall: Any GCpi: 0.18 Wind Duration: 1.60	Pg: NA Ct: NA CAT: NA Pf: NA Ce: NA Lu: NA Cs: NA Snow Duration: NA Building Code: FBC 2017 RES TPI Std: 2014 Rep Fac: Varies by Ld Case FT/RT:20(0)/10(0) Plate Type(s): WAVE	PP Deflection in loc L/defl L/# VERT(LL): 0.012 F 999 360 VERT(CL): 0.024 F 999 240 HORZ(LL): 0.006 D - - HORZ(TL): 0.012 D - - Creep Factor: 2.0 Max TC CSI: 0.304 Max BC CSI: 0.222 Max Web CSI: 0.069 VIEW Ver: 19.02.02B.0122.15

▲ Maximum Reactions (lbs)

	Gravity			Non-Gravity		
Loc	R+	/ R-	/ Rh	/ Rw	/ U	/ RL
B	545	/-	/-	/352	/10	/60
H	545	/-	/-	/352	/10	/-

Wind reactions based on MWFRS
B Brg Width = 3.5 Min Req = 1.5
H Brg Width = 3.5 Min Req = 1.5
Bearings B & H are a rigid surface.
Members not listed have forces less than 375#

Maximum Top Chord Forces Per Ply (lbs)

Chords	Tens.	Comp.	Chords	Tens.	Comp.
D - E	91	-403	E - F	38	-403

Lumber

Top chord: 2x4 SP #2;
Bot chord: 2x4 SP #2;
Webs: 2x4 SP #3;
Stack Chord: SC1 2x4 SP #2;
Stack Chord: SC2 2x4 SP #2;

Plating Notes

All plates are 2X4 except as noted.

(**) 2 plate(s) require special positioning. Refer to scaled plate plot details for special positioning requirements.

Loading

Truss designed to support 1-0-0 top chord outlookers and cladding load not to exceed 5.00 PSF one face and 24.0" span opposite face. Top chord must not be cut or notched, unless specified otherwise.

Purlins

In lieu of structural panels use purlins to brace TC @ 24" oc.

Wind

Wind loads based on MWFRS with additional C&C member design.

+ Member to be laterally braced for horizontal wind loads. bracing system to be desiged and furnished by others.

Additional Notes

See DWGS A14015ENC101014 & GBLLETIN0118 for gable wind bracing and other requirements.

Stacked top chord must NOT be notched or cut in area (NNL). Dropped top chord braced at 24" oc intervals. Attach stacked top chord (SC) to dropped top chord in notchable area using 3x4 tie-plates 24" oc. Center plate on stacked/dropped chord interface, plate length perpendicular to chord length. Splice top chord in notchable area using 3x6.

The overall height of this truss excluding overhangs is 3-0-4.

YOONHWAK KIM
LICENSE
No. 86367
STATE OF
FLORIDA
PROFESSIONAL ENGINEER

FL REG# 278, Yoonhwak Kim, FL PE #86367
08/18/2020

****WARNING**** READ AND FOLLOW ALL NOTES ON THIS DRAWING!
****IMPORTANT**** FURNISH THIS DRAWING TO ALL CONTRACTORS INCLUDING THE INSTALLERS

Trusses require extreme care in fabricating, handling, shipping, installing and bracing. Refer to and follow the latest edition of BCSI (Building Component Safety Information, by TPI and SBCA) for safety practices prior to performing these functions. Installers shall provide temporary bracing per BCSI. Unless noted otherwise, top chord shall have properly attached structural sheathing and bottom chord shall have a properly attached rigid ceiling. Locations shown for permanent lateral restraint of webs shall have bracing installed per BCSI sections B3, B7, or B10, as applicable. Apply plates to each face of truss and position as shown above and on the Joint Details, unless noted otherwise. Refer to drawings 160A-Z for standard plate positions. Refer to job's General Notes page for additional information.

Alpine, a division of ITW Building Components Group Inc. shall not be responsible for any deviation from this drawing, any failure to build the truss in conformance with ANSI/TPI 1, or for handling, shipping, installation and bracing of trusses. A seal on this drawing or cover page listing this drawing, indicates acceptance of professional engineering responsibility solely for the design shown. The suitability and use of this drawing for any structure is the responsibility of the Building Designer per ANSI/TPI 1 Sec.2.

For more information see these web sites: Alpine: www.alpineitw.com; TPI: www.tpinst.org; SBCA: www.sbcindustry.com; ICC: www.iccsafe.org

ALPINE
AN ITW COMPANY
6750 Forum Drive
Suite 305
Orlando FL, 32821

SEQN: 362155 / HIP_	Ply: 1	Job Number: 20-4510	Cust: R 215 JRef:1WXX2150001 T15
FROM: CDM	Qty: 3	Lot 41 JL	DrwNo: 231.20.1153.59823
		Truss Label: HJ1	KD / YK 08/18/2020

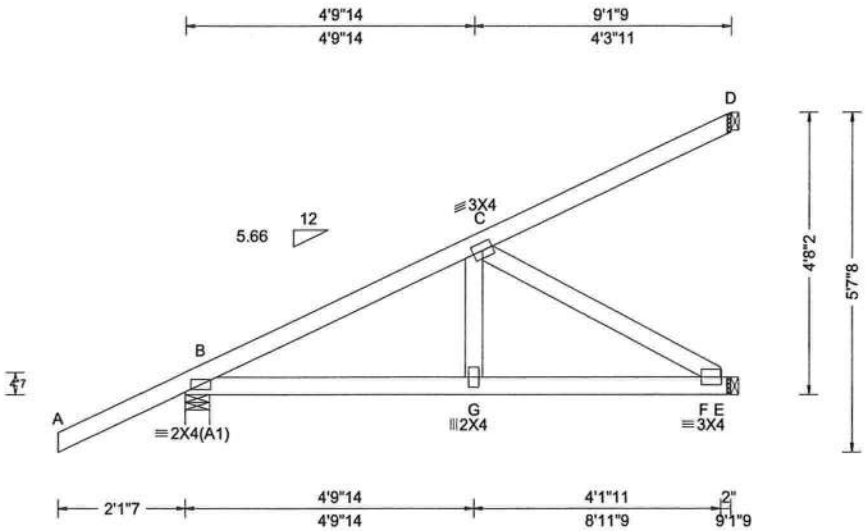

Loading Criteria (psf)	Wind Criteria	Snow Criteria (Pg,Pf in PSF)	Defl/CSI Criteria
TCLL: 20.00	Wind Std: ASCE 7-10	Pg: NA Ct: NA CAT: NA	PP Deflection in loc L/defl L/#
TCDL: 10.00	Speed: 130 mph	Pf: NA Ce: NA	VERT(LL): 0.010 G 999 360
BCLL: 0.00	Enclosure: Closed	Lu: NA Cs: NA	VERT(CL): 0.022 G 999 240
BCDL: 10.00	Risk Category: II	Snow Duration: NA	HORZ(LL): 0.003 F - -
Des Ld: 40.00	EXP: C Kzt: NA		HORZ(TL): 0.007 F - -
NCBCLL: 10.00	Mean Height: 15.00 ft	Building Code:	Creep Factor: 2.0
Soffit: 2.00	TCDL: 5.0 psf	FBC 2017 RES	Max TC CSI: 0.414
Load Duration: 1.25	BCDL: 5.0 psf	TPI Std: 2014	Max BC CSI: 0.432
Spacing: 24.0 "	MWFRS Parallel Dist: 0 to h/2	Rep Fac: Varies by Ld Case	Max Web CSI: 0.245
	C&C Dist a: 3.00 ft	FT/RT:20(0)/10(0)	
	Loc. from endwall: Any	Plate Type(s):	
	GCpi: 0.18	WAVE	VIEW Ver: 19.02.02B.0122.15
	Wind Duration: 1.60		

▲ Maximum Reactions (lbs)

	Gravity			Non-Gravity		
Loc	R+	/ R-	/ Rh	/ Rw	/ U	/ RL
B	372	/-	/-	/-	/59	/-
E	295	/-	/-	/-	/52	/-
D	57	/-	/-	/-	/22	/-

Wind reactions based on MWFRS
B Brg Width = 4.9 Min Req = 1.5
E Brg Width = 1.5 Min Req = -
D Brg Width = 1.5 Min Req = -
Bearing B is a rigid surface.
Members not listed have forces less than 375#

Maximum Top Chord Forces Per Ply (lbs)

Chords	Tens.	Comp.
B - C	104	-520

Maximum Bot Chord Forces Per Ply (lbs)

Chords	Tens.	Comp.	Chords	Tens.	Comp.
B - G	464	-91	G - F	456	-92

Maximum Web Forces Per Ply (lbs)

Webs	Tens.	Comp.
C - F	106	-528

Lumber

Top chord: 2x4 SP #2;
Bot chord: 2x4 SP #2;
Webs: 2x4 SP #3;

Special Loads

------(Lumber Dur.Fac.=1.25 / Plate Dur.Fac.=1.25)

TC: From	-0 plf at	-2.12 to	62 plf at	0.00
TC: From	2 plf at	0.00 to	2 plf at	9.13
BC: From	0 plf at	-2.12 to	4 plf at	0.00
BC: From	20 plf at	0.00 to	20 plf at	3.50
BC: From	2 plf at	3.50 to	2 plf at	9.13

TC: 86 lb Conc. Load at 3.50
TC: 229 lb Conc. Load at 6.33
BC: 78 lb Conc. Load at 3.50
BC: 160 lb Conc. Load at 6.33

Wind

Wind loads and reactions based on MWFRS.

Additional Notes

The overall height of this truss excluding overhang is 4-8-2.

YOONHWAK KIM
LICENSE
No. 86367
STATE OF
FLORIDA
PROFESSIONAL ENGINEER

FL REG# 278, Yoonhwak Kim, FL PE #86367
08/18/2020

****WARNING**** READ AND FOLLOW ALL NOTES ON THIS DRAWING!
****IMPORTANT**** FURNISH THIS DRAWING TO ALL CONTRACTORS INCLUDING THE INSTALLERS

Trusses require extreme care in fabricating, handling, shipping, installing and bracing. Refer to and follow the latest edition of BCSI (Building Component Safety Information, by TPI and SBCA) for safety practices prior to performing these functions. Installers shall provide temporary bracing per BCSI. Unless noted otherwise, top chord shall have properly attached structural sheathing and bottom chord shall have a properly attached rigid ceiling. Locations shown for permanent lateral restraint of webs shall have bracing installed per BCSI sections B3, B7, or B10, as applicable. Apply plates to each face of truss and position as shown above and on the Joint Details, unless noted otherwise. Refer to drawings 160A-Z for standard plate positions. Refer to job's General Notes page for additional information.

Alpine, a division of ITW Building Components Group Inc. shall not be responsible for any deviation from this drawing, any failure to build the truss in conformance with ANSI/TPI 1, or for handling, shipping, installation and bracing of trusses. A seal on this drawing or cover page listing this drawing, indicates acceptance of professional engineering responsibility solely for the design shown. The suitability and use of this drawing for any structure is the responsibility of the Building Designer per ANSI/TPI 1 Sec.2.

For more information see these web sites: Alpine: www.alpineitw.com; TPI: www.tpinst.org; SBCA: www.sbcindustry.com; ICC: www.iccsafe.org

ALPINE
AN ITW COMPANY
6750 Forum Drive
Suite 305
Orlando FL, 32821

SEQN: 362148 / JACK FROM: CDM	Ply: 1 Qty: 6	**Job Number:** 20-4510 Lot 41 JL **Truss Label:** J1	Cust: R 215 JRef: 1WXX2150001 T13 DrwNo: 231.20.1153.59869 KD / YK 08/18/2020

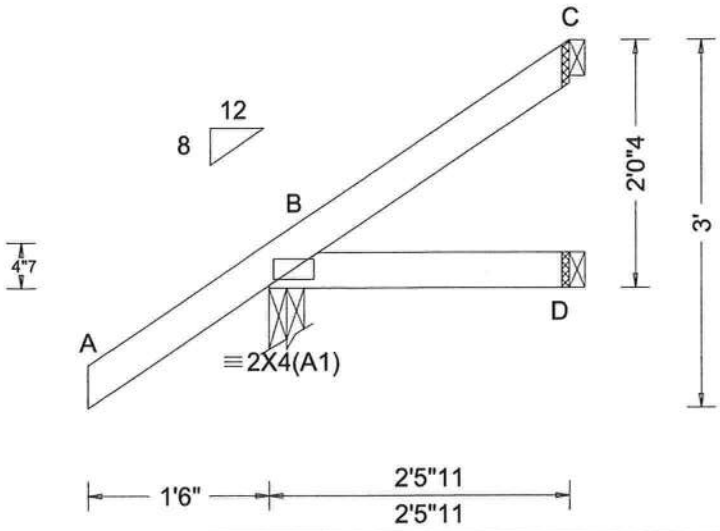

Loading Criteria (psf)	**Wind Criteria**	**Snow Criteria** (Pg,Pf in PSF)	**Defl/CSI Criteria**
TCLL: 20.00 TCDL: 10.00 BCLL: 0.00 BCDL: 10.00 Des Ld: 40.00 NCBCLL: 10.00 Soffit: 2.00 Load Duration: 1.25 Spacing: 24.0 "	Wind Std: ASCE 7-10 Speed: 130 mph Enclosure: Closed Risk Category: II EXP: C Kzt: NA Mean Height: 15.00 ft TCDL: 5.0 psf BCDL: 5.0 psf MWFRS Parallel Dist: 0 to h/2 C&C Dist a: 3.00 ft Loc. from endwall: Any GCpi: 0.18 Wind Duration: 1.60	Pg: NA Ct: NA CAT: NA Pf: NA Ce: NA Lu: NA Cs: NA Snow Duration: NA Building Code: FBC 2017 RES TPI Std: 2014 Rep Fac: Yes FT/RT:20(0)/10(0) Plate Type(s): WAVE	PP Deflection in loc L/defl L/# VERT(LL): NA VERT(CL): NA HORZ(LL): -0.001 D - - HORZ(TL): 0.001 D - - Creep Factor: 2.0 Max TC CSI: 0.187 Max BC CSI: 0.047 Max Web CSI: 0.000 VIEW Ver: 19.02.02B.0122.15

▲ Maximum Reactions (lbs)

	Gravity			Non-Gravity		
Loc	R+	/ R-	/ Rh	/ Rw	/ U	/ RL
B	253	/-	/-	/197	/36	/74
D	39	/-	/-	/33	/5	/-
C	43	/-	/-	/24	/23	/-

Wind reactions based on MWFRS
B Brg Width = 3.5 Min Req = 1.5
D Brg Width = 1.5 Min Req = -
C Brg Width = 1.5 Min Req = -
Bearing B is a rigid surface.
Members not listed have forces less than 375#

Lumber

Top chord: 2x4 SP #2;
Bot chord: 2x4 SP #2;

Wind

Wind loads based on MWFRS with additional C&C member design.

Additional Notes

The overall height of this truss excluding overhang is 2-0-4.

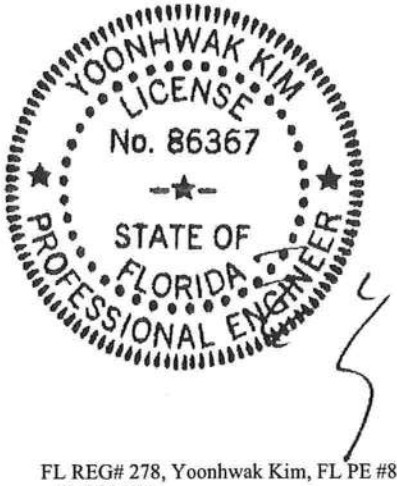

FL REG# 278, Yoonhwak Kim, FL PE #86367
08/18/2020

****WARNING**** READ AND FOLLOW ALL NOTES ON THIS DRAWING!
****IMPORTANT**** FURNISH THIS DRAWING TO ALL CONTRACTORS INCLUDING THE INSTALLERS

Trusses require extreme care in fabricating, handling, shipping, installing and bracing. Refer to and follow the latest edition of BCSI (Building Component Safety Information, by TPI and SBCA) for safety practices prior to performing these functions. Installers shall provide temporary bracing per BCSI. Unless noted otherwise, top chord shall have properly attached structural sheathing and bottom chord shall have a properly attached rigid ceiling. Locations shown for permanent lateral restraint of webs shall have bracing installed per BCSI sections B3, B7, or B10, as applicable. Apply plates to each face of truss and position as shown above and on the Joint Details, unless noted otherwise. Refer to drawings 160A-Z for standard plate positions. Refer to job's General Notes page for additional information.

Alpine, a division of ITW Building Components Group Inc. shall not be responsible for any deviation from this drawing, any failure to build the truss in conformance with ANSI/TPI 1, or for handling, shipping, installation and bracing of trusses. A seal on this drawing or cover page listing this drawing, indicates acceptance of professional engineering responsibility solely for the design shown. The suitability and use of this drawing for any structure is the responsibility of the Building Designer per ANSI/TPI 1 Sec.2.

For more information see these web sites: Alpine: www.alpineitw.com; TPI: www.tpinst.org; SBCA: www.sbcindustry.com; ICC: www.iccsafe.org

ALPINE
AN ITW COMPANY
6750 Forum Drive
Suite 305
Orlando FL, 32821

SEQN: 362142 / JACK FROM: CDM	Ply: 1 Qty: 5	**Job Number:** 20-4510 Lot 41 JL **Truss Label:** J2	Cust: R 215 JRef: 1WXX2150001 T12 DrwNo: 231.20.1153.59870 KD / YK 08/18/2020

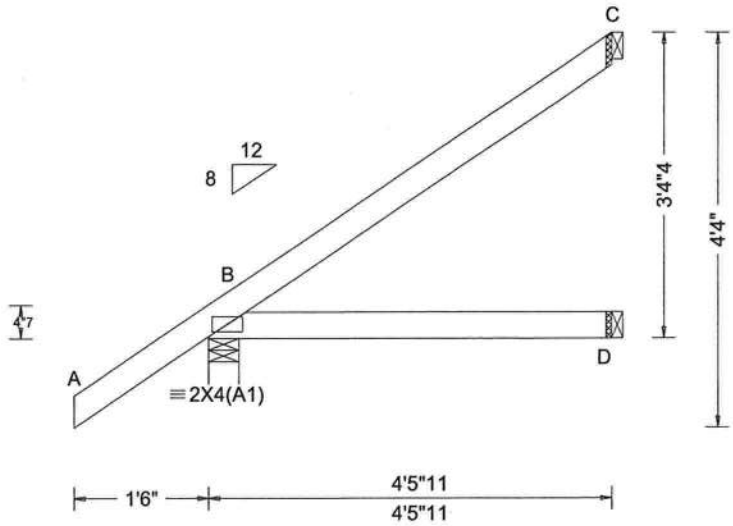

Loading Criteria (psf)	**Wind Criteria**	**Snow Criteria** (Pg,Pf in PSF)	**Defl/CSI Criteria**
TCLL: 20.00 TCDL: 10.00 BCLL: 0.00 BCDL: 10.00 Des Ld: 40.00 NCBCLL: 10.00 Soffit: 2.00 Load Duration: 1.25 Spacing: 24.0 "	Wind Std: ASCE 7-10 Speed: 130 mph Enclosure: Closed Risk Category: II EXP: C Kzt: NA Mean Height: 15.00 ft TCDL: 5.0 psf BCDL: 5.0 psf MWFRS Parallel Dist: 0 to h/2 C&C Dist a: 3.00 ft Loc. from endwall: Any GCpi: 0.18 Wind Duration: 1.60	Pg: NA Ct: NA CAT: NA Pf: NA Ce: NA Lu: NA Cs: NA Snow Duration: NA Building Code: FBC 2017 RES TPI Std: 2014 Rep Fac: Yes FT/RT:20(0)/10(0) Plate Type(s): WAVE	PP Deflection in loc L/defl L/# VERT(LL): NA VERT(CL): NA HORZ(LL): 0.002 D - - HORZ(TL): 0.005 D - - Creep Factor: 2.0 Max TC CSI: 0.244 Max BC CSI: 0.199 Max Web CSI: 0.000 VIEW Ver: 19.02.02B.0122.15

▲ Maximum Reactions (lbs)

	Gravity			Non-Gravity		
Loc	R+	/ R-	/ Rh	/ Rw	/ U	/ RL
B	319	/-	/-	/235	/30	/113
D	80	/-	/-	/58	/-	/-
C	115	/-	/-	/64	/52	/-

Wind reactions based on MWFRS
B Brg Width = 4.0 Min Req = 1.5
D Brg Width = 1.5 Min Req = -
C Brg Width = 1.5 Min Req = -
Bearing B is a rigid surface.
Members not listed have forces less than 375#

Lumber

Top chord: 2x4 SP #2;
Bot chord: 2x4 SP #2;

Wind

Wind loads based on MWFRS with additional C&C member design.

Additional Notes

The overall height of this truss excluding overhang is 3-4-4.

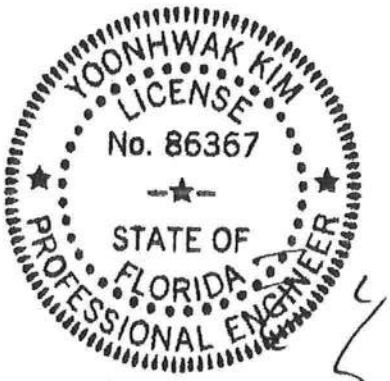

FL REG# 278, Yoonhwak Kim, FL PE #86367
08/18/2020

****WARNING**** READ AND FOLLOW ALL NOTES ON THIS DRAWING!
****IMPORTANT**** FURNISH THIS DRAWING TO ALL CONTRACTORS INCLUDING THE INSTALLERS

Trusses require extreme care in fabricating, handling, shipping, installing and bracing. Refer to and follow the latest edition of BCSI (Building Component Safety Information, by TPI and SBCA) for safety practices prior to performing these functions. Installers shall provide temporary bracing per BCSI. Unless noted otherwise, top chord shall have properly attached structural sheathing and bottom chord shall have a properly attached rigid ceiling. Locations shown for permanent lateral restraint of webs shall have bracing installed per BCSI sections B3, B7, or B10, as applicable. Apply plates to each face of truss and position as shown above and on the Joint Details, unless noted otherwise. Refer to drawings 160A-Z for standard plate positions. Refer to job's General Notes page for additional information.

Alpine, a division of ITW Building Components Group Inc. shall not be responsible for any deviation from this drawing, any failure to build the truss in conformance with ANSI/TPI 1, or for handling, shipping, installation and bracing of trusses. A seal on this drawing or cover page listing this drawing, indicates acceptance of professional engineering responsibility solely for the design shown. The suitability and use of this drawing for any structure is the responsibility of the Building Designer per ANSI/TPI 1 Sec.2.

For more information see these web sites: Alpine: www.alpineitw.com; TPI: www.tpinst.org; SBCA: www.sbcindustry.com; ICC: www.iccsafe.org

ALPINE
AN ITW COMPANY
6750 Forum Drive
Suite 305
Orlando FL, 32821

SEQN: 362154 / JACK FROM: CDM	Ply: 1 Qty: 1	**Job Number:** 20-4510 Lot 41 JL **Truss Label:** J2A	Cust: R 215 JRef: 1WXX2150001 T16 DrwNo: 231.20.1153.59698 KD / YK 08/18/2020

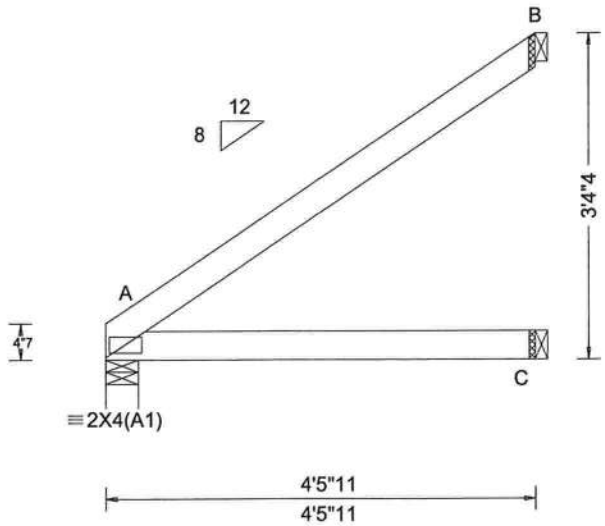

Loading Criteria (psf)	**Wind Criteria**	**Snow Criteria** (Pg,Pf in PSF)	**Defl/CSI Criteria**
TCLL: 20.00 TCDL: 10.00 BCLL: 0.00 BCDL: 10.00 Des Ld: 40.00 NCBCLL: 10.00 Soffit: 2.00 Load Duration: 1.25 Spacing: 24.0 "	Wind Std: ASCE 7-10 Speed: 130 mph Enclosure: Closed Risk Category: II EXP: C Kzt: NA Mean Height: 15.00 ft TCDL: 5.0 psf BCDL: 5.0 psf MWFRS Parallel Dist: 0 to h/2 C&C Dist a: 3.00 ft Loc. from endwall: Any GCpi: 0.18 Wind Duration: 1.60	Pg: NA Ct: NA CAT: NA Pf: NA Ce: NA Lu: NA Cs: NA Snow Duration: NA Building Code: FBC 2017 RES TPI Std: 2014 Rep Fac: Yes FT/RT:20(0)/10(0) Plate Type(s): WAVE	PP Deflection in loc L/defl L/# VERT(LL): NA VERT(CL): NA HORZ(LL): 0.004 C - - HORZ(TL): 0.009 C - - Creep Factor: 2.0 Max TC CSI: 0.298 Max BC CSI: 0.219 Max Web CSI: 0.000 VIEW Ver: 19.02.02B.0122.15

▲ Maximum Reactions (lbs)

	Gravity			Non-Gravity		
Loc	R+	/ R-	/ Rh	/ Rw	/ U	/ RL
A	194	/-	/-	/127	/-	/84
C	84	/-	/-	/62	/2	/-
B	127	/-	/-	/76	/57	/-

Wind reactions based on MWFRS
A Brg Width = 4.0 Min Req = 1.5
C Brg Width = 1.5 Min Req = -
B Brg Width = 1.5 Min Req = -
Bearing A is a rigid surface.
Members not listed have forces less than 375#

Lumber

Top chord: 2x4 SP #2;
Bot chord: 2x4 SP #2;

Wind

Wind loads based on MWFRS with additional C&C member design.

Additional Notes

The overall height of this truss excluding overhang is 3-4-4.

YOONHWAK KIM
LICENSE
No. 86367
STATE OF
FLORIDA
PROFESSIONAL ENGINEER

FL REG# 278, Yoonhwak Kim, FL PE #86367
08/18/2020

****WARNING**** READ AND FOLLOW ALL NOTES ON THIS DRAWING!
****IMPORTANT**** FURNISH THIS DRAWING TO ALL CONTRACTORS INCLUDING THE INSTALLERS

Trusses require extreme care in fabricating, handling, shipping, installing and bracing. Refer to and follow the latest edition of BCSI (Building Component Safety Information, by TPI and SBCA) for safety practices prior to performing these functions. Installers shall provide temporary bracing per BCSI. Unless noted otherwise, top chord shall have properly attached structural sheathing and bottom chord shall have a properly attached rigid ceiling. Locations shown for permanent lateral restraint of webs shall have bracing installed per BCSI sections B3, B7, or B10, as applicable. Apply plates to each face of truss and position as shown above and on the Joint Details, unless noted otherwise. Refer to drawings 160A-Z for standard plate positions. Refer to job's General Notes page for additional information.

Alpine, a division of ITW Building Components Group Inc. shall not be responsible for any deviation from this drawing, any failure to build the truss in conformance with ANSI/TPI 1, or for handling, shipping, installation and bracing of trusses. A seal on this drawing or cover page listing this drawing, indicates acceptance of professional engineering responsibility solely for the design shown. The suitability and use of this drawing for any structure is the responsibility of the Building Designer per ANSI/TPI 1 Sec.2.

For more information see these web sites: Alpine: www.alpineitw.com; TPI: www.tpinst.org; SBCA: www.sbcindustry.com; ICC: www.iccsafe.org

ALPINE AN ITW COMPANY
6750 Forum Drive
Suite 305
Orlando FL, 32821

SEQN: 362141 / EJAC FROM: CDM	Ply: 1 Qty: 30	**Job Number:** 20-4510 Lot 41 JL **Truss Label:** J3	Cust: R 215 JRef: 1WXX2150001 T14 DrwNo: 231.20.1153.59760 KD / YK 08/18/2020

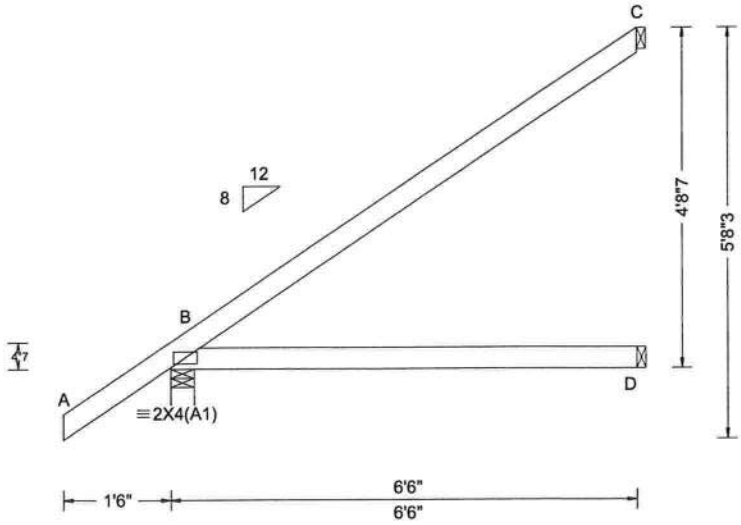

Loading Criteria (psf)	**Wind Criteria**	**Snow Criteria** (Pg,Pf in PSF)	**Defl/CSI Criteria**
TCLL: 20.00 TCDL: 10.00 BCLL: 0.00 BCDL: 10.00 Des Ld: 40.00 NCBCLL: 10.00 Soffit: 2.00 Load Duration: 1.25 Spacing: 24.0 "	Wind Std: ASCE 7-10 Speed: 130 mph Enclosure: Closed Risk Category: II EXP: C Kzt: NA Mean Height: 15.00 ft TCDL: 5.0 psf BCDL: 5.0 psf MWFRS Parallel Dist: 0 to h/2 C&C Dist a: 3.00 ft Loc. from endwall: Any GCpi: 0.18 Wind Duration: 1.60	Pg: NA Ct: NA CAT: NA Pf: NA Ce: NA Lu: NA Cs: NA Snow Duration: NA Building Code: FBC 2017 RES TPI Std: 2014 Rep Fac: Yes FT/RT:20(0)/10(0) Plate Type(s): WAVE	PP Deflection in loc L/defl L/# VERT(LL): NA VERT(CL): NA HORZ(LL): 0.010 D - - HORZ(TL): 0.021 D - - Creep Factor: 2.0 Max TC CSI: 0.626 Max BC CSI: 0.450 Max Web CSI: 0.000 VIEW Ver: 19.02.02B.0122.15

▲ Maximum Reactions (lbs)

	Gravity			Non-Gravity		
Loc	R+	/ R-	/ Rh	/ Rw	/ U	/ RL
B	397	/-	/-	/285	/29	/151
D	121	/-	/-	/84	/1	/-
C	178	/-	/-	/104	/79	/-

Wind reactions based on MWFRS
B Brg Width = 4.0 Min Req = 1.5
D Brg Width = 1.5 Min Req = -
C Brg Width = 1.5 Min Req = -
Bearing B is a rigid surface.
Members not listed have forces less than 375#

Lumber

Top chord: 2x4 SP #2;
Bot chord: 2x4 SP #2;

Wind

Wind loads based on MWFRS with additional C&C member design.

Additional Notes

The overall height of this truss excluding overhang is 4-8-7.

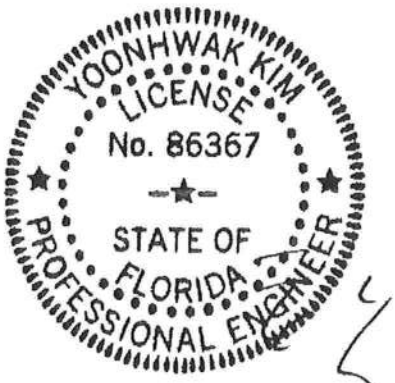

FL REG# 278, Yoonhwak Kim, FL PE #86367
08/18/2020

****WARNING**** READ AND FOLLOW ALL NOTES ON THIS DRAWING!
****IMPORTANT**** FURNISH THIS DRAWING TO ALL CONTRACTORS INCLUDING THE INSTALLERS

Trusses require extreme care in fabricating, handling, shipping, installing and bracing. Refer to and follow the latest edition of BCSI (Building Component Safety Information, by TPI and SBCA) for safety practices prior to performing these functions. Installers shall provide temporary bracing per BCSI. Unless noted otherwise, top chord shall have properly attached structural sheathing and bottom chord shall have a properly attached rigid ceiling. Locations shown for permanent lateral restraint of webs shall have bracing installed per BCSI sections B3, B7, or B10, as applicable. Apply plates to each face of truss and position as shown above and on the Joint Details, unless noted otherwise. Refer to drawings 160A-Z for standard plate positions. Refer to job's General Notes page for additional information.

Alpine, a division of ITW Building Components Group Inc. shall not be responsible for any deviation from this drawing, any failure to build the truss in conformance with ANSI/TPI 1, or for handling, shipping, installation and bracing of trusses. A seal on this drawing or cover page listing this drawing, indicates acceptance of professional engineering responsibility solely for the design shown. The suitability and use of this drawing for any structure is the responsibility of the Building Designer per ANSI/TPI 1 Sec.2.

For more information see these web sites: Alpine: www.alpineitw.com; TPI: www.tpinst.org; SBCA: www.sbcindustry.com; ICC: www.iccsafe.org

ALPINE
AN ITW COMPANY
6750 Forum Drive
Suite 305
Orlando FL, 32821

SEQN: 362284 / GABL FROM: CDM	Ply: 1 Qty: 20	**Job Number:** 20-4510 Lot 41 JL **Truss Label:** P01	Cust: R 215 JRef: 1WXX2150001 T23 DrwNo: 231.20.1153.59838 KD / YK 08/18/2020

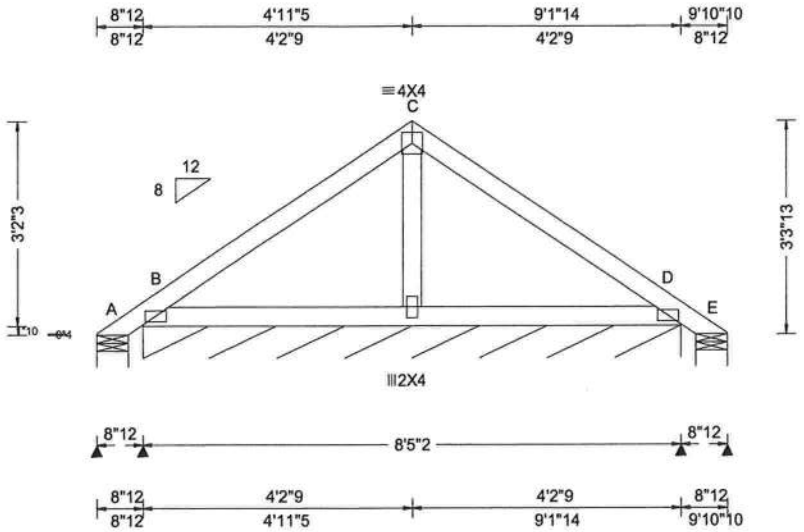

Loading Criteria (psf)

TCLL:	20.00
TCDL:	10.00
BCLL:	0.00
BCDL:	10.00
Des Ld:	40.00
NCBCLL:	10.00
Soffit:	2.00

Load Duration: 1.25
Spacing: 24.0 "

Wind Criteria
Wind Std: ASCE 7-10
Speed: 130 mph
Enclosure: Closed
Risk Category: II
EXP: C Kzt: NA
Mean Height: 15.44 ft
TCDL: 5.0 psf
BCDL: 5.0 psf
MWFRS Parallel Dist: h to 2h
C&C Dist a: 3.00 ft
Loc. from endwall: not in 9.00 ft
GCpi: 0.18
Wind Duration: 1.60

Snow Criteria (Pg,Pf in PSF)
Pg: NA Ct: NA CAT: NA
Pf: NA Ce: NA
Lu: NA Cs: NA
Snow Duration: NA

Building Code:
FBC 2017 RES
TPI Std: 2014
Rep Fac: No
FT/RT:20(0)/10(0)
Plate Type(s):
WAVE

Defl/CSI Criteria

PP Deflection in	loc	L/defl	L/#
VERT(LL): 0.001	F	999	360
VERT(CL): 0.002	F	999	240
HORZ(LL): -0.001	F	-	-
HORZ(TL): 0.002	F	-	-

Creep Factor: 2.0
Max TC CSI: 0.194
Max BC CSI: 0.090
Max Web CSI: 0.025

VIEW Ver: 19.02.02B.0122.15

▲ Maximum Reactions (lbs), or *=PLF

	Gravity			Non-Gravity		
Loc	R+	/ R-	/ Rh	/ Rw	/ U	/ RL
A	-	/-99	/-	/81	/126	/92
B*	100	/-	/-	/61	/4	/-
E	-	/-99	/-	/31	/75	/-

Wind reactions based on MWFRS
A Brg Width = 5.9 Min Req = 1.5
B Brg Width = 101 Min Req = -
E Brg Width = 5.9 Min Req = 1.5
Bearings A, B, & E are a rigid surface.
Members not listed have forces less than 375#

Lumber

Top chord: 2x4 SP #2;
Bot chord: 2x4 SP #2;
Webs: 2x4 SP #3;

Plating Notes

All plates are 2X4(A1) except as noted.

Loading

Gable end supports 8" max rake overhang. Top chord must not be cut or notched.

Wind

Wind loads based on MWFRS with additional C&C member design.

Additional Notes

See DWGS A14030ENC101014 & GBLLETIN0118 for gable wind bracing and other requirements.

Refer to DWG PB160101014 for piggyback details.

The overall height of this truss excluding overhang is 13-3-13.

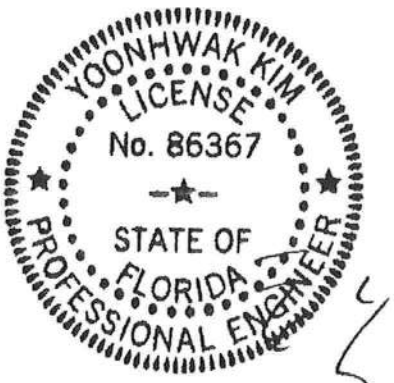

FL REG# 278, Yoonhwak Kim, FL PE #86367
08/18/2020

****WARNING**** READ AND FOLLOW ALL NOTES ON THIS DRAWING!
****IMPORTANT**** FURNISH THIS DRAWING TO ALL CONTRACTORS INCLUDING THE INSTALLERS

Trusses require extreme care in fabricating, handling, shipping, installing and bracing. Refer to and follow the latest edition of BCSI (Building Component Safety Information, by TPI and SBCA) for safety practices prior to performing these functions. Installers shall provide temporary bracing per BCSI. Unless noted otherwise, top chord shall have properly attached structural sheathing and bottom chord shall have a properly attached rigid ceiling. Locations shown for permanent lateral restraint of webs shall have bracing installed per BCSI sections B3, B7, or B10, as applicable. Apply plates to each face of truss and position as shown above and on the Joint Details, unless noted otherwise. Refer to drawings 160A-Z for standard plate positions. Refer to job's General Notes page for additional information.

Alpine, a division of ITW Building Components Group Inc. shall not be responsible for any deviation from this drawing, any failure to build the truss in conformance with ANSI/TPI 1, or for handling, shipping, installation and bracing of trusses. A seal on this drawing or cover page listing this drawing, indicates acceptance of professional engineering responsibility solely for the design shown. The suitability and use of this drawing for any structure is the responsibility of the Building Designer per ANSI/TPI 1 Sec.2.

For more information see these web sites: Alpine: www.alpineitw.com; TPI: www.tpinst.org; SBCA: www.sbcindustry.com; ICC: www.iccsafe.org

ALPINE
AN ITW COMPANY
6750 Forum Drive
Suite 305
Orlando FL, 32821

SEQN: 362256 / GABL FROM: CDM	Ply: 1 Qty: 2	**Job Number:** 20-4510 Lot 41 JL **Truss Label:** P02	Cust: R 215 JRef:1WXX2150001 T73 DrwNo: 231.20.1153.59714 KD / YK 08/18/2020

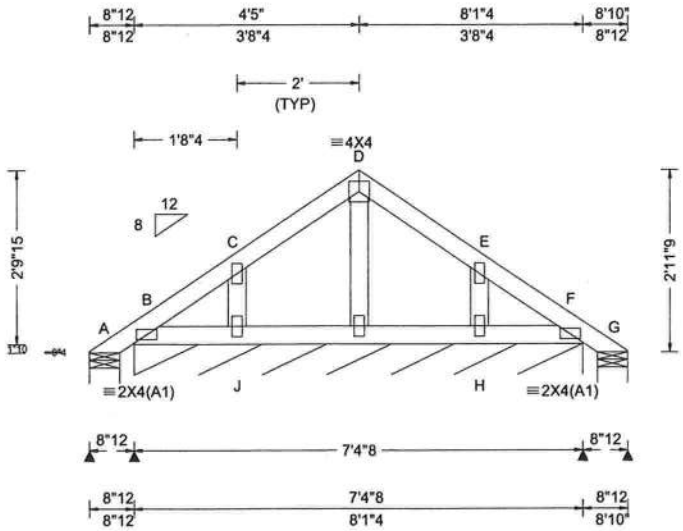

Loading Criteria (psf)	**Wind Criteria**	**Snow Criteria** (Pg,Pf in PSF)	**Defl/CSI Criteria**
TCLL: 20.00 TCDL: 10.00 BCLL: 0.00 BCDL: 10.00 Des Ld: 40.00 NCBCLL: 10.00 Soffit: 2.00 Load Duration: 1.25 Spacing: 24.0 "	Wind Std: ASCE 7-10 Speed: 130 mph Enclosure: Closed Risk Category: II EXP: C Kzt: NA Mean Height: 15.44 ft TCDL: 5.0 psf BCDL: 5.0 psf MWFRS Parallel Dist: h to 2h C&C Dist a: 3.00 ft Loc. from endwall: not in 9.00 ft GCpi: 0.18 Wind Duration: 1.60	Pg: NA Ct: NA CAT: NA Pf: NA Ce: NA Lu: NA Cs: NA Snow Duration: NA Building Code: FBC 2017 RES TPI Std: 2014 Rep Fac: Yes FT/RT:20(0)/10(0) Plate Type(s): WAVE	PP Deflection in loc L/defl L/# VERT(LL): 0.000 D 999 360 VERT(CL): 0.000 D 999 240 HORZ(LL): 0.000 E - - HORZ(TL): 0.001 E - - Creep Factor: 2.0 Max TC CSI: 0.050 Max BC CSI: 0.019 Max Web CSI: 0.026 VIEW Ver: 19.02.02B.0122.15

▲ Maximum Reactions (lbs), or *=PLF

	Gravity			Non-Gravity		
Loc	R+	/ R-	/ Rh	/ Rw	/ U	/ RL
A	17	/-	/-	/54	/40	/82
B*	73	/-	/-	/51	/-	/-
G	17	/-	/-	/13	/-	/-

Wind reactions based on MWFRS
A Brg Width = 5.9 Min Req = 1.5
B Brg Width = 88.5 Min Req = -
G Brg Width = 5.9 Min Req = 1.5
Bearings A, B, & G are a rigid surface.
Members not listed have forces less than 375#

Lumber

Top chord: 2x4 SP #2;
Bot chord: 2x4 SP #2;
Webs: 2x4 SP #3;

Plating Notes

All plates are 2X4 except as noted.

Loading

Gable end supports 8" max rake overhang. Top chord must not be cut or notched.

Wind

Wind loads based on MWFRS with additional C&C member design.

Additional Notes

See DWGS A14030ENC101014 & GBLLETIN0118 for gable wind bracing and other requirements.

Refer to DWG PB160101014 for piggyback details.

The overall height of this truss excluding overhang is 12-11-9.

YOONHWAK KIM
LICENSE
No. 86367
STATE OF
FLORIDA
PROFESSIONAL ENGINEER

FL REG# 278, Yoonhwak Kim, FL PE #86367
08/18/2020

****WARNING**** READ AND FOLLOW ALL NOTES ON THIS DRAWING!
****IMPORTANT**** FURNISH THIS DRAWING TO ALL CONTRACTORS INCLUDING THE INSTALLERS

Trusses require extreme care in fabricating, handling, shipping, installing and bracing. Refer to and follow the latest edition of BCSI (Building Component Safety Information, by TPI and SBCA) for safety practices prior to performing these functions. Installers shall provide temporary bracing per BCSI. Unless noted otherwise, top chord shall have properly attached structural sheathing and bottom chord shall have a properly attached rigid ceiling. Locations shown for permanent lateral restraint of webs shall have bracing installed per BCSI sections B3, B7, or B10, as applicable. Apply plates to each face of truss and position as shown above and on the Joint Details, unless noted otherwise. Refer to drawings 160A-Z for standard plate positions. Refer to job's General Notes page for additional information.

Alpine, a division of ITW Building Components Group Inc. shall not be responsible for any deviation from this drawing, any failure to build the truss in conformance with ANSI/TPI 1, or for handling, shipping, installation and bracing of trusses. A seal on this drawing or cover page listing this drawing, indicates acceptance of professional engineering responsibility solely for the design shown. The suitability and use of this drawing for any structure is the responsibility of the Building Designer per ANSI/TPI 1 Sec.2.

For more information see these web sites: Alpine: www.alpineitw.com; TPI: www.tpinst.org; SBCA: www.sbcindustry.com; ICC: www.iccsafe.org

ALPINE
AN ITW COMPANY
6750 Forum Drive
Suite 305
Orlando FL, 32821

Gable Stud Reinforcement Detail

ASCE 7-10: 140 mph Wind Speed, 15' Mean Height, Enclosed, Exposure C, Kzt = 1.00

Or: 120 mph Wind Speed, 15' Mean Height, Partially Enclosed, Exposure C, Kzt = 1.00
Or: 120 mph Wind Speed, 15' Mean Height, Enclosed, Exposure D, Kzt = 1.00
Or: 100 mph Wind Speed, 15' Mean Height, Partially Enclosed, Exposure D, Kzt = 1.00

Max Gable Vertical Length

2x4 Gable Vertical Spacing	Species	Brace Grade	No Braces	(1) 1x4 "L" Brace * Group A	(1) 1x4 "L" Brace * Group B	(1) 2x4 "L" Brace * Group A	(1) 2x4 "L" Brace * Group B	(2) 2x4 "L" Brace ** Group A	(2) 2x4 "L" Brace ** Group B	(1) 2x6 "L" Brace * Group A	(1) 2x6 "L" Brace * Group B	(2) 2x6 "L" Brace ** Group A	(2) 2x6 "L" Brace ** Group B
24" o.c.	SPF HF	#1 / #2	4' 3"	7' 3"	7' 7"	8' 7"	8' 11"	10' 3"	10' 8"	13' 6"	14' 0"	14' 0"	14' 0"
		#3	4' 1"	6' 7"	7' 1"	8' 6"	8' 10"	10' 1"	10' 6"	13' 4"	13' 10"	14' 0"	14' 0"
		Stud	4' 1"	6' 7"	7' 0"	8' 6"	8' 10"	10' 1"	10' 6"	13' 4"	13' 10"	14' 0"	14' 0"
		Standard	4' 1"	5' 8"	6' 0"	7' 7"	8' 1"	10' 1"	10' 6"	11' 10"	12' 8"	14' 0"	14' 0"
	SP DFL	#1	4' 6"	7' 4"	7' 8"	8' 8"	9' 0"	10' 4"	10' 9"	13' 8"	14' 0"	14' 0"	14' 0"
		#2	4' 3"	7' 3"	7' 7"	8' 7"	8' 11"	10' 3"	10' 8"	13' 6"	14' 0"	14' 0"	14' 0"
		#3	4' 2"	6' 0"	6' 4"	7' 11"	8' 6"	10' 2"	10' 7"	12' 5"	13' 4"	14' 0"	14' 0"
		Stud	4' 2"	6' 0"	6' 4"	7' 11"	8' 6"	10' 2"	10' 7"	12' 5"	13' 4"	14' 0"	14' 0"
		Standard	4' 0"	5' 3"	5' 7"	7' 0"	7' 6"	9' 6"	10' 2"	11' 0"	11' 10"	14' 0"	14' 0"
16" o.c.	SPF HF	#1 / #2	4' 11"	8' 4"	8' 8"	9' 10"	10' 3"	11' 8"	12' 2"	14' 0"	14' 0"	14' 0"	14' 0"
		#3	4' 8"	8' 1"	8' 8"	9' 8"	10' 1"	11' 7"	12' 1"	14' 0"	14' 0"	14' 0"	14' 0"
		Stud	4' 8"	8' 1"	8' 6"	9' 8"	10' 1"	11' 7"	12' 1"	14' 0"	14' 0"	14' 0"	14' 0"
		Standard	4' 8"	6' 11"	7' 5"	9' 3"	9' 11"	11' 7"	12' 1"	14' 0"	14' 0"	14' 0"	14' 0"
	SP DFL	#1	5' 1"	8' 5"	8' 9"	9' 11"	10' 4"	11' 10"	12' 4"	14' 0"	14' 0"	14' 0"	14' 0"
		#2	4' 11"	8' 4"	8' 8"	9' 10"	10' 3"	11' 8"	12' 2"	14' 0"	14' 0"	14' 0"	14' 0"
		#3	4' 9"	7' 4"	7' 9"	9' 9"	10' 2"	11' 8"	12' 1"	14' 0"	14' 0"	14' 0"	14' 0"
		Stud	4' 9"	7' 4"	7' 9"	9' 9"	10' 2"	11' 8"	12' 1"	14' 0"	14' 0"	14' 0"	14' 0"
		Standard	4' 8"	6' 5"	6' 10"	8' 7"	9' 2"	11' 7"	12' 1"	13' 6"	14' 0"	14' 0"	14' 0"
12" o.c.	SPF HF	#1 / #2	5' 5"	9' 2"	9' 6"	10' 10"	11' 3"	11' 8"	13' 5"	14' 0"	14' 0"	14' 0"	14' 0"
		#3	5' 1"	9' 0"	9' 4"	10' 8"	11' 1"	12' 9"	13' 3"	14' 0"	14' 0"	14' 0"	14' 0"
		Stud	5' 1"	9' 0"	9' 4"	10' 8"	11' 1"	12' 9"	13' 3"	14' 0"	14' 0"	14' 0"	14' 0"
		Standard	5' 1"	8' 0"	8' 6"	10' 8"	11' 1"	12' 9"	13' 3"	14' 0"	14' 0"	14' 0"	14' 0"
	SP DFL	#1	5' 8"	9' 3"	9' 8"	10' 11"	11' 4"	13' 0"	13' 6"	14' 0"	14' 0"	14' 0"	14' 0"
		#2	5' 5"	9' 2"	9' 6"	10' 10"	11' 3"	12' 11"	13' 5"	14' 0"	14' 0"	14' 0"	14' 0"
		#3	5' 3"	8' 5"	9' 0"	10' 9"	11' 2"	12' 10"	13' 4"	14' 0"	14' 0"	14' 0"	14' 0"
		Stud	5' 3"	8' 5"	9' 0"	10' 9"	11' 2"	12' 10"	13' 4"	14' 0"	14' 0"	14' 0"	14' 0"
		Standard	5' 1"	7' 5"	7' 11"	9' 11"	10' 7"	12' 9"	13' 3"	14' 0"	14' 0"	14' 0"	14' 0"

Bracing Group Species and Grades:

Group A:

Spruce-Pine-Fir: #1 / #2 — Standard; #3 — Stud

Hem-Fir: #2 — Stud; #3 — Standard

Douglas Fir-Larch: #3 — Stud — Standard

Southern Pine***: #3 — Stud — Standard

Group B:

Hem-Fir: #1 & Btr — #1

Douglas Fir-Larch: #1 — #2

Southern Pine***: #1 — #2

1x4 Braces shall be SRB (Stress-Rated Board).

***For 1x4 So. Pine use only Industrial 55 or Industrial 45 Stress-Rated Boards. Group B values may be used with these grades.

Gable Truss Detail Notes:

Wind Load deflection criterion is L/240.

Provide uplift connections for 55 plf over continuous bearing (5 psf TC Dead Load).

Gable end supports load from 4' 0" outlookers with 2' 0" overhang, or 12" plywood overhang.

Attach "L" braces with 10d (0.128"x3.0" min) nails.

* For (1) "L" brace: space nails at 2" o.c. in 18" end zones and 4" o.c. between zones.

** For (2) "L" braces: space nails at 3" o.c. in 18" end zones and 6" o.c. between zones.

"L" bracing must be a minimum of 80% of web member length.

Gable Vertical Plate Sizes

Vertical Length	No Splice
Less than 4' 0"	1X4 or 2X3
Greater than 4' 0"	3X4

+ Refer to common truss design for peak, splice, and heel plates.

Refer to the Building Designer for conditions not addressed by this detail.

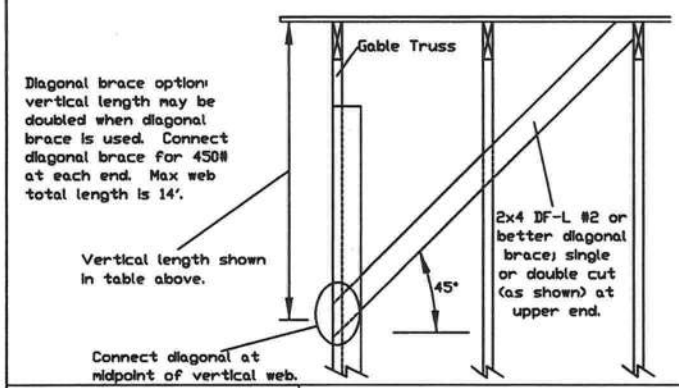

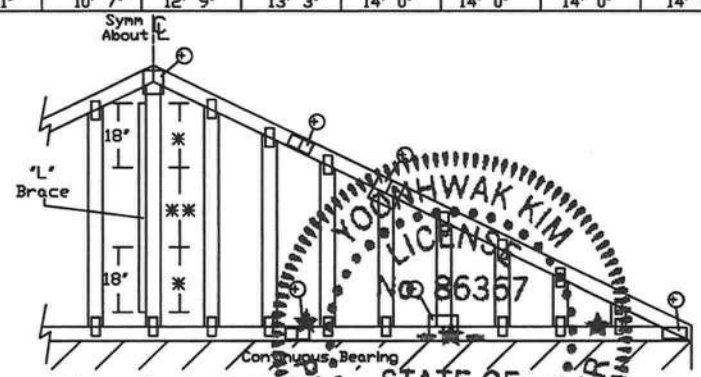

Refer to chart above for max gable vertical length.

YOONHWAK KIM LICENSE No 86367 STATE OF FLORIDA PROFESSIONAL ENGINEER

WARNING READ AND FOLLOW ALL NOTES ON THIS DRAWING!
IMPORTANT FURNISH THIS DRAWING TO ALL CONTRACTORS INCLUDING THE INSTALLERS.

Trusses require extreme care in fabricating, handling, shipping, installing and bracing. Refer to and follow the latest edition of BCSI (Building Component Safety Information, by TPI and SBCA) for safety practices prior to performing these functions. Installers shall provide temporary bracing per BCSI. Unless noted otherwise, top chord shall have properly attached structural sheathing and bottom chord shall have a properly attached rigid ceiling. Locations shown for permanent lateral restraint of webs shall have bracing installed per BCSI sections B3, B7 or B10, as applicable. Apply plates to each face of truss and position as shown above and on the Joint Details, unless noted otherwise. Refer to drawings 160A-Z for standard plate positions.

Alpine, a division of ITW Building Components Group Inc. shall not be responsible for any deviation from this drawing, any failure to build the truss in conformance with ANSI/TPI 1, or for handling, shipping, installation & bracing of trusses.

A seal on this drawing or cover page listing this drawing, indicates acceptance of professional engineering responsibility solely for the design shown. The suitability and use of this drawing for any structure is the responsibility of the Building Designer per ANSI/TPI 1 Sec.2.

For more information see this job's general notes page and these web sites: ALPINE: www.alpineitw.com; TPI: www.tpinst.org; SBCA: www.sbcindustry.org; ICC: www.iccsafe.org

ALPINE AN ITW COMPANY
514 Earth City Expressway
Suite 242
Earth City, MO 63045

MAX. TOT. LD. 60 PSF

MAX. SPACING 24.0"

REF	ASCE7-10-GAB14015
DATE	10/01/14
DRWG	A14015ENC101014

CLR Reinforcing Member Substitution

This detail is to be used when a Continuous Lateral Restraint (CLR) is specified on a truss design but an alternative web reinforcement method is desired.

Notes:

This detail is only applicable for changing the specified CLR shown on single ply sealed designs to T-reinforcement or L-reinforecement or scab reinforcement.

Alternative reinforcement specified in chart below may be conservative. For minimum alternative reinforcement, re-run design with appropriate reinforcement type.

Use scabs instead of L- or T- reinforcement on webs with intersecting truss joints, such as K-web joints, that may interfere with proper application along the narrow face of the web.

Web Member Size	Specified CLR Restraint	Alternative Reinforecement T- or L- Reinf.	Alternative Reinforecement Scab Reinf.
2x3 or 2x4	1 row	2x4	1-2x4
2x3 or 2x4	2 rows	2x6	2-2x4
2x6	1 row	2x4	1-2x6
2x6	2 rows	2x6	2-2x4(*)
2x8	1 row	2x6	1-2x8
2x8	2 rows	2x6	2-2x6(*)

T-reinforcement, L-reinforcement, or scab reinforcement to be same species and grade or better than web member unless specified otherwise on Engineer's sealed design.

(*) Center scab on wide face of web. Apply (1) scab to each face of web.

T-Reinforcement or L-Reinforcement:

Apply to either side of web narrow face. Attach with 10d (0.128"x3.0",min) nails at 6" o.c. Reinforcing member is a minimum 80% of web member length.

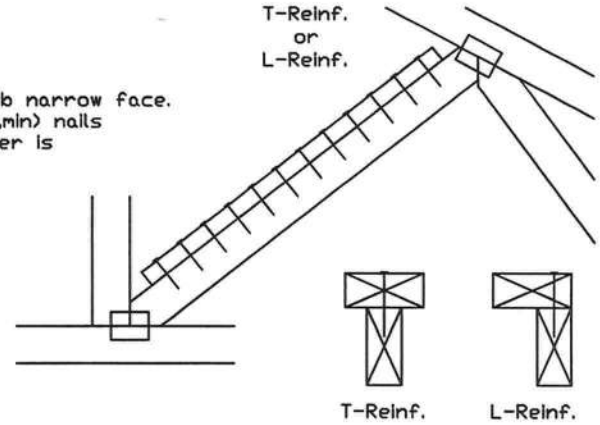

Scab Reinforcement:

Apply scab(s) to wide face of web. No more than (1) scab per face. Attach with 10d (0.128"x3.0",min) nails at 6" o.c. Reinforcing member is a minimum 80% of web member length.

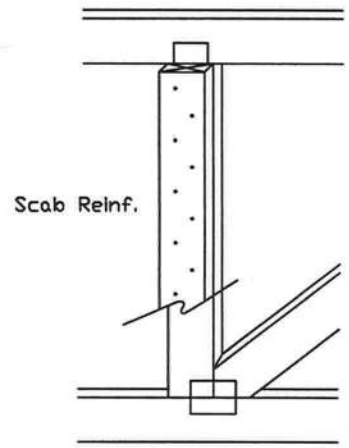

YOONHWAK KIM
LICENSE
No. 86367
STATE OF
FLORIDA
PROFESSIONAL ENGINEER

ALPINE
AN ITW COMPANY
514 Earth City Expressway
Suite 242
Earth City, MO 63045

WARNING READ AND FOLLOW ALL NOTES ON THIS DRAWING!
IMPORTANT FURNISH THIS DRAWING TO ALL CONTRACTORS INCLUDING THE INSTALLERS.

Trusses require extreme care in fabricating, handling, shipping, installing and bracing. Refer to and follow the latest edition of BCSI (Building Component Safety Information, by TPI and SBCA) for safety practices prior to performing these functions. Installers shall provide temporary bracing per BCSI. Unless noted otherwise, top chord shall have properly attached structural sheathing and bottom chord shall have a properly attached rigid ceiling. Locations shown for permanent lateral restraint of webs shall have bracing installed per BCSI sections B3, B7 or B10, as applicable. Apply plates to each face of truss and position as shown above and on the Joint Details, unless noted otherwise. Refer to drawings 160A-Z for standard plate positions.

Alpine, a division of ITW Building Components Group Inc. shall not be responsible for any deviation from this drawing, any failure to build the truss in conformance with ANSI/TPI 1, or for handling, shipping, installation & bracing of trusses.

A seal on this drawing or cover page listing this drawing, indicates acceptance of professional engineering responsibility solely for the design shown. The suitability and use of this drawing for any structure is the responsibility of the Building Designer per ANSI/TPI 1 Sec.2.

For more information see this job's general notes page and these web sites: ALPINE: www.alpineitw.com; TPI: www.tpinst.org; SBCA: www.sbcindustry.org; ICC: www.iccsafe.org

TC LL	PSF	REF CLR Subst.
TC DL	PSF	DATE 01/02/19
BC DL	PSF	DRWG BRCLBSUB0119
BC LL	PSF	
TOT. LD.	PSF	
DUR. FAC.		
SPACING		

Gable Detail
For Let-in Verticals

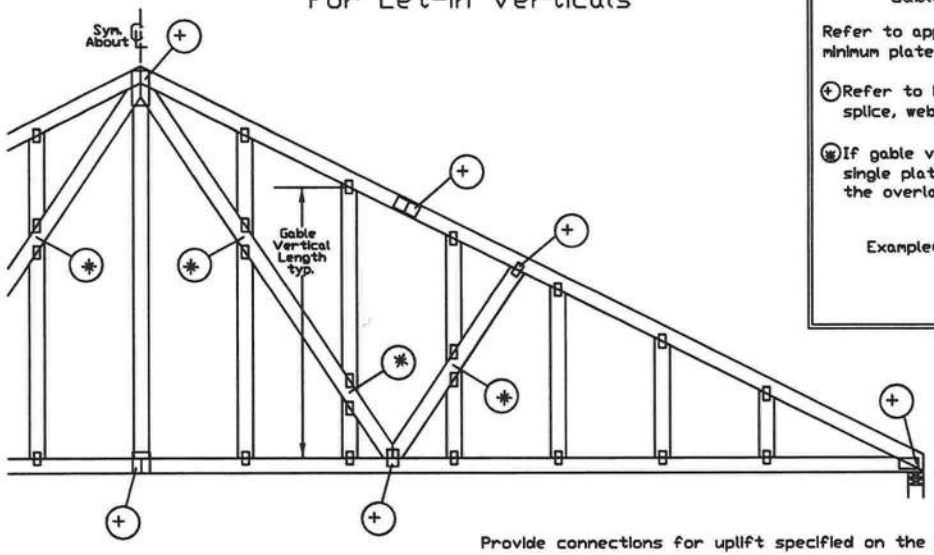

Gable Truss Plate Sizes

Refer to appropriate Alpine gable detail for minimum plate sizes for vertical studs.

(+) Refer to Engineered truss design for peak, splice, web, and heel plates.

(*) If gable vertical plates overlap, use a single plate that covers the total area of the overlapped plates to span the web.

Example:

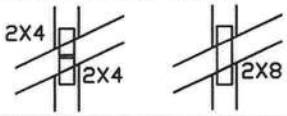

'T' Reinforcement Attachment Detail

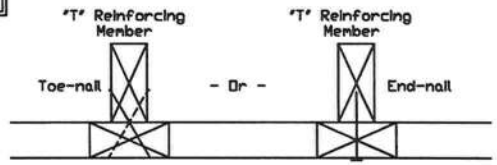

Provide connections for uplift specified on the engineered truss design.

Attach each 'T' reinforcing member with

End Driven Nails:
10d Common (0.148"x 3.",min) Nails at 4" o.c. plus
(4) nails in the top and bottom chords.

Toenailed Nails:
10d Common (0.148"x3",min) Toenails at 4" o.c. plus
(4) toenails in the top and bottom chords.

This detail to be used with the appropriate Alpine gable detail for ASCE wind load.

ASCE 7-05 Gable Detail Drawings
A13015051014, A12015051014, A11015051014, A10015051014, A14015051014,
A13030051014, A12030051014, A11030051014, A10030051014, A14030051014

ASCE 7-10 & ASCE 7-16 Gable Detail Drawings
A11515ENC100118, A12015ENC100118, A14015ENC100118, A16015ENC100118,
A18015ENC100118, A20015ENC100118, A20015END100118, A20015PED100118,
A11530ENC100118, A12030ENC100118, A14030ENC100118, A16030ENC100118,
A18030ENC100118, A20030ENC100118, A20030END100118, A20030PED100118,
S11515ENC100118, S12015ENC100118, S14015ENC100118, S16015ENC100118,
S18015ENC100118, S20015ENC100118, S20015END100118, S20015PED100118,
S11530ENC100118, S12030ENC100118, S14030ENC100118, S16030ENC100118,
S18030ENC100118, S20030ENC100118, S20030END100118, S20030PED100118

See appropriate Alpine gable detail for maximum unreinforced gable vertical length.

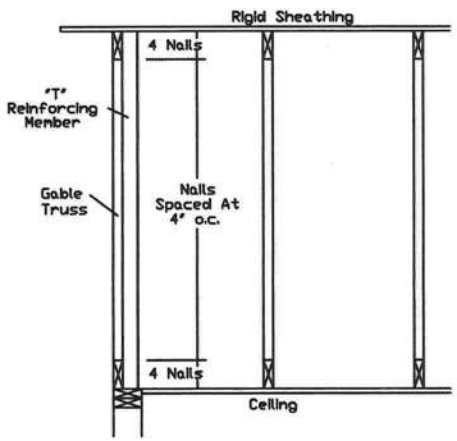

To convert from 'L' to 'T' reinforcing members, multiply 'T' increase by length (based on appropriate Alpine gable detail).

Maximum allowable 'T' reinforced gable vertical length is 14' from top to bottom chord.

'T' reinforcing member material must match size, specie, and grade of the 'L' reinforcing member.

Web Length Increase w/ 'T' Brace

'T' Reinf. Mbr. Size	'T' Increase
2x4	30 %
2x6	20 %

Example:
ASCE 7-10 Wind Speed = 120 mph
Mean Roof Height = 30 ft, Kzt = 1.00
Gable Vertical = 24"o.c. SP #3
'T' Reinforcing Member Size = 2x4
'T' Brace Increase (From Above) = 30% = 1.30
(1) 2x4 'L' Brace Length = 8' 7"
Maximum 'T' Reinforced Gable Vertical Length
1.30 x 8' 7" = 11' 2"

STATE OF FLORIDA PROFESSIONAL ENGINEER YOONHWAK KIM 86367

ALPINE AN ITW COMPANY
514 Earth City Expressway
Suite 242
Earth City, MO 63045

WARNING READ AND FOLLOW ALL NOTES ON THIS DRAWING!
IMPORTANT FURNISH THIS DRAWING TO ALL CONTRACTORS INCLUDING THE INSTALLERS.

Trusses require extreme care in fabricating, handling, shipping, installing and bracing. Refer to and follow the latest edition of BCSI (Building Component Safety Information, by TPI and SBCA) for safety practices prior to performing these functions. Installers shall provide temporary bracing per BCSI. Unless noted otherwise, top chord shall have properly attached structural sheathing and botton chord shall have a properly attached rigid ceiling. Locations shown for permanent lateral restraint of webs shall have bracing installed per BCSI sections B3, B7 or B10, as applicable. Apply plates to each face of truss and position as shown above and on the Joint Details, unless noted otherwise. Refer to drawings 160A-Z for standard plate positions.

Alpine, a division of ITW Building Components Group Inc. shall not be responsible for any deviation from this drawing, any failure to build the truss in conformance with ANSI/TPI 1, or for handling, shipping, installation & bracing of trusses.

A seal on this drawing or cover page listing this drawing, indicates acceptance of professional engineering responsibility solely for the design shown. The suitability and use of this drawing for any structure is the responsibility of the Building Designer per ANSI/TPI 1 Sec.2.

For more information see this job's general notes page and these web sites:
ALPINE: www.alpineitw.com; TPI: www.tpinst.org; SBCA: www.sbcindustry.org; ICC: www.iccsafe.org

1/8/2020 Alpine Job# 278, Yoonhwak Kim, FL PE #86367

MAX. TOT. LD. 60 PSF
DUR. FAC. ANY
MAX. SPACING 24.0"

REF	LET-IN VERT
DATE	01/02/2018
DRWG	GBLLETIN0118

Piggyback Detail - ASCE 7-10: 160 mph, 30' Mean Height, Enclosed, Exposure C, Kzt=1.00

160 mph Wind, 30.00 ft Mean Hgt, ASCE 7-10, Enclosed Bldg. located anywhere in roof, Exp C, Wind DL= 5.0 psf (min), Kzt=1.0.
Or 140 mph wind, 30.00 ft Mean Hgt, ASCE 7-10, Enclosed Bldg. located anywhere in roof, Exp D, wind DL= 5.0 psf (min), Kzt=1.0.

Note: Top chords of trusses supporting piggyback cap trusses must be adequately braced by sheathing or purlins. The building Engineer of Record shall provide diagonal bracing or any other suitable anchorage to permanently restrain purlins, and lateral bracing for out of plane loads over gable ends.

Maximum truss spacing is 24" o.c. detail is not applicable if cap supports additional loads such as cupola, steeple, chimney or drag strut loads.

** Refer to Engineer's sealed truss design drawing for piggyback and base truss specifications.

Detail A : Purlin Spacing = 24" o.c. or less

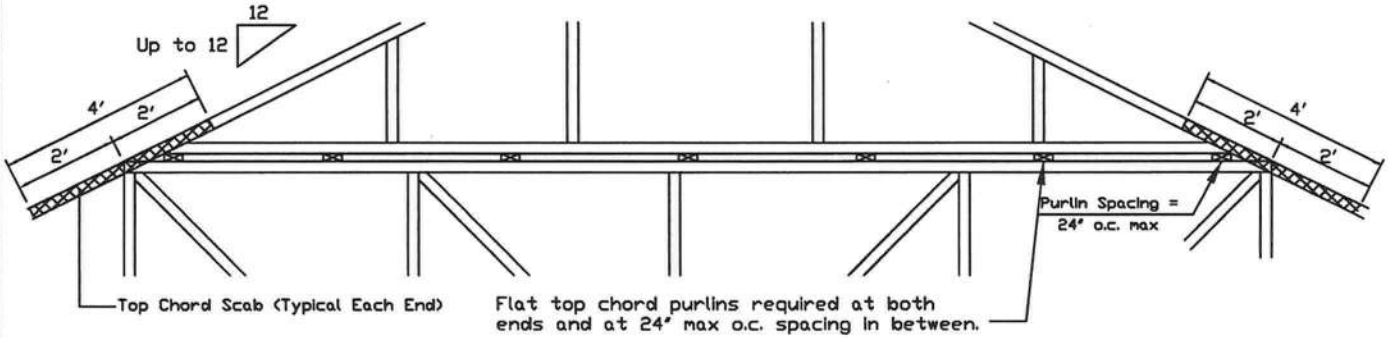

Piggyback cap truss slant nailed to all top chord purlin bracing with (2) 16d box nails (0.135"x3.5") and secure top chord with 2x4 #3 grade scab (1 side only at each end) attached with 2 rows of 10d box nails (0.128"x3") at 4" o.c.

Attach purlin bracing to the flat top chord using (2) 16d box nails (0.135"x3.5").

The top chord #3 grade 2x4 scab may be replaced with either of the following: (1) 3X8 Trulox plate attached with (8) 0.120"x1.375" nails, (4) into cap TC & (4) into base truss TC or (1) 28PB wave piggyback plate plated to the piggyback truss TC and attached to the base truss TC with (4) 0.120"x1.375" nails. Note: Nailing thru holes of wave plate is acceptable.

Detail B : Purlin Spacing > 24" o.c.

Piggyback cap truss slant nailed to all top chord purlin bracing with (2) 16d box nails (0.135"x3.5") and secure top chord with 2x4 #3 grade scab (1 side only at each end) attached with 2 rows of 10d box nails (0.128"x3") at 4" o.c.

Attach purlin bracing to the flat top chord using a minimum of (2) 16d box nails (0.135"x3.5").

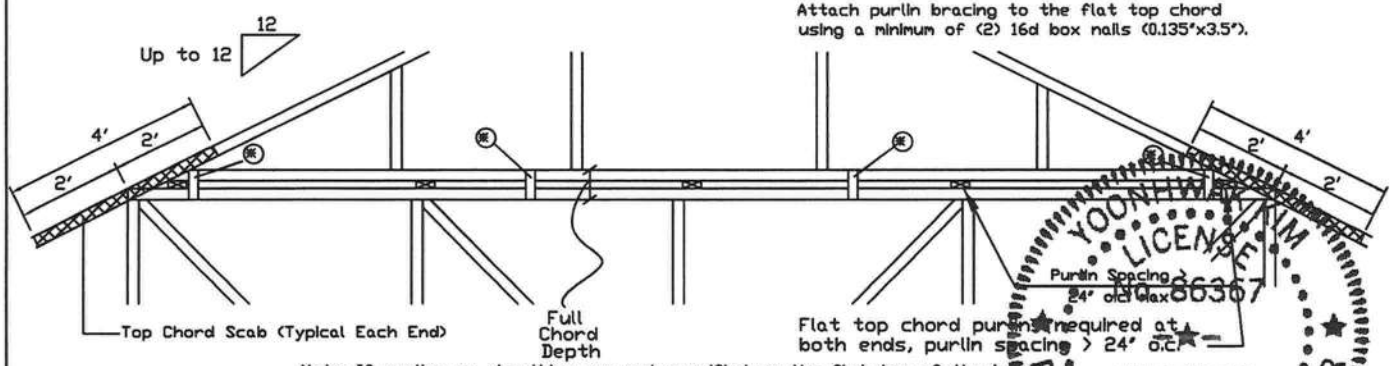

Note: If purlins or sheathing are not specified on the flat top of the base truss, purlins must be installed at 24" o.c. max. and use Detail A.

** In addition, provide connection with one of the following methods:

Trulox
Use 3X8 Trulox plates for 2x4 chord member, and 3X10 Trulox plates for 2x6 and larger chord members. Attach to each face @ 8" o.c. with (4) 0.120"x1.375" nails into cap bottom chord and (4) in base truss top chord. Trulox plates may be staggered 4" o.c. front to back faces.

APA Rated Gusset
8"x8"x7/16" (min) APA rated sheathing gussets (each face). Attach @ 8" o.c. with (8) 6d common (0.113"x2") nails per gusset, (4) in cap bottom chord and (4) in base truss top chord. Gussets may be staggered 4" o.c. front to back faces.

2x4 Vertical Scabs
2x4 SPF #2, full chord depth scabs (each face). Attach @ 8" o.c. with (6) 10d box nails (0.128"x3") per scab, (3) in cap bottom chord and (3) in base truss top chord. Scabs may be staggered 4" o.c. front to back faces.

28PB Wave Piggyback Plate
One 28PB wave piggyback plate to each face @ 8" o.c. Attach teeth to piggyback at time of fabrication. Attach to supporting truss with (4) 0.120"x1.375" nails per face per ply. Piggyback plates may be staggered 4" o.c. front to back faces.

YOONHWAK KIM LICENSE No. 86367 STATE OF FLORIDA PROFESSIONAL ENGINEER

ALPINE
AN ITW COMPANY
514 Earth City Expressway
Suite 242
Earth City, MO 63045

WARNING READ AND FOLLOW ALL NOTES ON THIS DRAWING!
IMPORTANT FURNISH THIS DRAWING TO ALL CONTRACTORS INCLUDING THE INSTALLERS.

Trusses require extreme care in fabricating, handling, shipping, installing and bracing. Refer to and follow the latest edition of BCSI (Building Component Safety Information, by TPI and SBCA) for safety practices prior to performing these functions. Installers shall provide temporary bracing per BCSI. Unless noted otherwise, top chord shall have properly attached structural sheathing and bottom chord shall have a properly attached rigid ceiling. Locations shown for permanent lateral restraint of webs shall have bracing installed per BCSI sections B3, B7 or B10, as applicable. Apply plates to each face of truss and position as shown above and on the Joint Details, unless noted otherwise. Refer to drawings 160A-Z for standard plate positions.

Alpine, a division of ITW Building Components Group Inc. shall not be responsible for any deviation from this drawing, any failure to build the truss in conformance with ANSI/TPI 1, or for handling, shipping, installation & bracing of trusses.

A seal on this drawing or cover page listing this drawing, indicates acceptance of professional engineering responsibility solely for the design shown. The suitability and use of this drawing for any structure is the responsibility of the Building Designer per ANSI/TPI 1 Sec.2.

For more information see this job's general notes page and these web sites:
ALPINE: www.alpineitw.com; TPI: www.tpinst.org; SBCA: www.sbcindustry.org; ICC: www.iccsafe.org

REF	PIGGYBACK
DATE	10/01/14
DRWG	PB160101014
SPACING	24.0"

Gable Stud Reinforcement Detail

ASCE 7-10: 140 mph Wind Speed, 30' Mean Height, Enclosed, Exposure C, Kzt = 1.00

Or: 120 mph Wind Speed, 30' Mean Height, Partially Enclosed, Exposure C, Kzt = 1.00
Or: 120 mph Wind Speed, 30' Mean Height, Enclosed, Exposure D, Kzt = 1.00
Or: 100 mph wind speed, 30' Mean Height, Partially Enclosed, Exposure D, Kzt = 1.00

Max Gable Vertical Length	2x4 Gable Vertical Spacing	Species	Brace Grade	No Braces	(1) 1x4 'L' Brace ✱		(1) 2x4 'L' Brace ✱		(2) 2x4 'L' Brace ✱✱		(1) 2x6 'L' Brace ✱		(2) 2x6 'L' Brace ✱✱	
					Group A	Group B	Group A	Group B	Group A	Group B	Group A	Group B	Group A	Group B
	24" o.c.	SPF HF	#1 / #2	4' 1"	6' 11"	7' 2"	8' 2"	8' 6"	9' 9"	10' 2"	12' 10"	13' 4"	14' 0"	14' 0"
			#3	3' 10"	6' 2"	6' 7"	8' 1"	8' 5"	9' 8"	10' 0"	12' 8"	13' 2"	14' 0"	14' 0"
			Stud	3' 10"	6' 2"	6' 6"	8' 1"	8' 5"	9' 8"	10' 0"	12' 8"	13' 2"	14' 0"	14' 0"
			Standard	3' 10"	5' 3"	5' 7"	7' 0"	7' 6"	9' 6"	10' 0"	11' 0"	11' 10"	14' 0"	14' 0"
		SP DFL	#1	4' 2"	7' 0"	7' 3"	8' 3"	8' 7"	9' 10"	10' 3"	13' 0"	13' 6"	14' 0"	14' 0"
			#2	4' 1"	6' 11"	7' 2"	8' 2"	8' 6"	9' 9"	10' 2"	12' 10"	13' 4"	14' 0"	14' 0"
			#3	4' 0"	5' 7"	5' 11"	7' 5"	7' 11"	9' 8"	10' 1"	11' 7"	12' 5"	14' 0"	14' 0"
			Stud	4' 0"	5' 7"	5' 11"	7' 5"	7' 11"	9' 8"	10' 1"	11' 7"	12' 5"	14' 0"	14' 0"
			Standard	3' 9"	4' 11"	5' 13"	6' 6"	7' 0"	8' 10"	9' 6"	10' 3"	11' 0"	13' 11"	14' 0"
	16" o.c.	SPF HF	#1 / #2	4' 8"	7' 11"	8' 3"	9' 4"	9' 9"	11' 2"	11' 7"	14' 0"	14' 0"	14' 0"	14' 0"
			#3	4' 5"	7' 6"	8' 3"	9' 3"	9' 7"	11' 0"	11' 6"	14' 0"	14' 0"	14' 0"	14' 0"
			Stud	4' 5"	7' 6"	8' 0"	9' 3"	9' 7"	11' 0"	11' 6"	14' 0"	14' 0"	14' 0"	14' 0"
			Standard	4' 5"	6' 5"	6' 10"	8' 7"	9' 2"	11' 0"	11' 6"	13' 6"	14' 0"	14' 0"	14' 0"
		SP DFL	#1	4' 10"	8' 0"	8' 4"	9' 6"	9' 10"	11' 3"	11' 9"	14' 0"	14' 0"	14' 0"	14' 0"
			#2	4' 8"	7' 11"	8' 3"	9' 4"	9' 9"	11' 2"	11' 7"	14' 0"	14' 0"	14' 0"	14' 0"
			#3	4' 7"	6' 10"	7' 3"	9' 1"	9' 8"	11' 1"	11' 6"	14' 0"	14' 0"	14' 0"	14' 0"
			Stud	4' 7"	6' 10"	7' 3"	9' 1"	9' 8"	11' 1"	11' 6"	14' 0"	14' 0"	14' 0"	14' 0"
			Standard	4' 5"	6' 0"	6' 5"	8' 0"	8' 7"	10' 10"	11' 6"	12' 7"	13' 15"	14' 0"	14' 0"
	12" o.c.	SPF HF	#1 / #2	5' 2"	8' 9"	9' 1"	10' 4"	10' 9"	11' 2"	12' 9"	14' 0"	14' 0"	14' 0"	14' 0"
			#3	4' 10"	8' 7"	8' 11"	10' 2"	10' 7"	12' 2"	12' 8"	14' 0"	14' 0"	14' 0"	14' 0"
			Stud	4' 10"	8' 7"	8' 11"	10' 2"	10' 7"	12' 2"	12' 8"	14' 0"	14' 0"	14' 0"	14' 0"
			Standard	4' 10"	7' 5"	7' 11"	9' 11"	10' 7"	12' 2"	12' 8"	14' 0"	14' 0"	14' 0"	14' 0"
		SP DFL	#1	5' 4"	8' 10"	9' 2"	10' 5"	10' 10"	12' 5"	12' 11"	14' 0"	14' 0"	14' 0"	14' 0"
			#2	5' 2"	8' 9"	9' 1"	10' 4"	10' 9"	12' 3"	12' 9"	14' 0"	14' 0"	14' 0"	14' 0"
			#3	5' 0"	7' 10"	8' 4"	10' 3"	10' 8"	12' 2"	12' 8"	14' 0"	14' 0"	14' 0"	14' 0"
			Stud	5' 0"	7' 10"	8' 4"	10' 3"	10' 8"	12' 2"	12' 8"	14' 0"	14' 0"	14' 0"	14' 0"
			Standard	4' 10"	6' 11"	7' 4"	9' 3"	9' 10"	12' 2"	12' 8"	14' 0"	14' 0"	14' 0"	14' 0"

Bracing Group Species and Grades:

Group A:

Spruce-Pine-Fir: #1 / #2, Standard; #3, Stud

Hem-Fir: #2, Stud; #3, Standard

Douglas Fir-Larch: #3, Stud, Standard

Southern Pine✱✱✱: #3, Stud, Standard

Group B:

Hem-Fir: #1 & Btr, #1

Douglas Fir-Larch: #1, #2

Southern Pine✱✱✱: #1, #2

1x4 Braces shall be SRB (Stress-Rated Board).

✱✱✱For 1x4 So. Pine use only Industrial 55 or Industrial 45 Stress-Rated Boards. Group B values may be used with these grades.

Gable Truss Detail Notes:

Wind Load deflection criterion is L/240.

Provide uplift connections for 100 plf over continuous bearing (5 psf TC Dead Load).

Gable end supports load from 4' 0" outlookers with 2' 0" overhang, or 12" plywood overhang.

Attach 'L' braces with 10d (0.128"x3.0" min) nails.

✱ For (1) 'L' brace: space nails at 2" o.c. in 18" end zones and 4" o.c. between zones.

✱✱For (2) 'L' braces: space nails at 3" o.c. in 18" end zones and 6" o.c. between zones.

'L' bracing must be a minimum of 80% of web member length.

Gable Vertical Plate Sizes	
Vertical Length	No Splice
Less than 4' 0"	2X4
Greater than 4' 0", but less than 11' 6"	3X4
Greater than 11' 6"	4X4

+ Refer to common truss design for peak, splice, and heel plates.

Refer to the Building Designer for conditions not addressed by this detail.

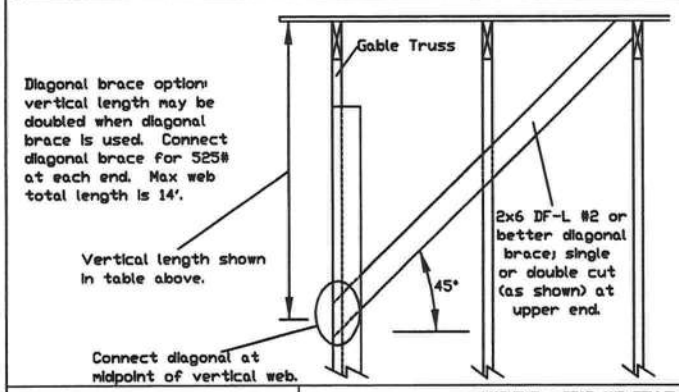

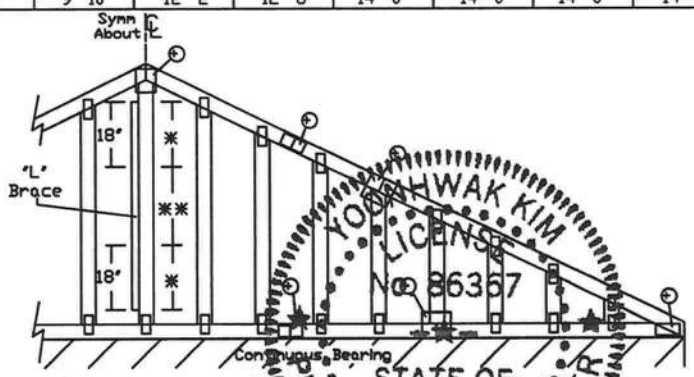

Refer to chart above for max gable vertical length.

YOONHWAK KIM LICENSE No 86367 STATE OF FLORIDA PROFESSIONAL ENGINEER

✱✱WARNING✱✱ READ AND FOLLOW ALL NOTES ON THIS DRAWING!
✱✱IMPORTANT✱✱ FURNISH THIS DRAWING TO ALL CONTRACTORS INCLUDING THE INSTALLERS.

Trusses require extreme care in fabricating, handling, shipping, installing and bracing. Refer to and follow the latest edition of BCSI (Building Component Safety Information, by TPI and SBCA) for safety practices prior to performing these functions. Installers shall provide temporary bracing per BCSI. Unless noted otherwise, top chord shall have properly attached structural sheathing and bottom chord shall have a properly attached rigid ceiling. Locations shown for permanent lateral restraint of webs shall have bracing installed per BCSI sections B3, B7 or B10, as applicable. Apply plates to each face of truss and position as shown above and on the Joint Details, unless noted otherwise. Refer to drawings 160A-Z for standard plate positions.

Alpine, a division of ITW Building Components Group Inc. shall not be responsible for any deviation from this drawing, any failure to build the truss in conformance with ANSI/TPI 1, or for handling, shipping, installation & bracing of trusses.

A seal on this drawing or cover page listing this drawing, indicates acceptance of professional engineering responsibility solely for the design shown. The suitability and use of this drawing for any structure is the responsibility of the Building Designer per ANSI/TPI 1 Sec.2.

For more information see this job's general notes page and these web sites: ALPINE: www.alpineitw.com; TPI: www.tpinst.org; SBCA: www.sbcindustry.org; ICC: www.iccsafe.org

ALPINE AN ITW COMPANY
514 Earth City Expressway
Suite 242
Earth City, MO 63045

08/18/2020 BPG# 278, Yoonhwak Kim, FL PE #86367

REF	ASCE7-10-GAB14030
DATE	10/01/14
DRWG	A14030ENC101014

MAX. TOT. LD. 60 PSF

MAX. SPACING 24.0"

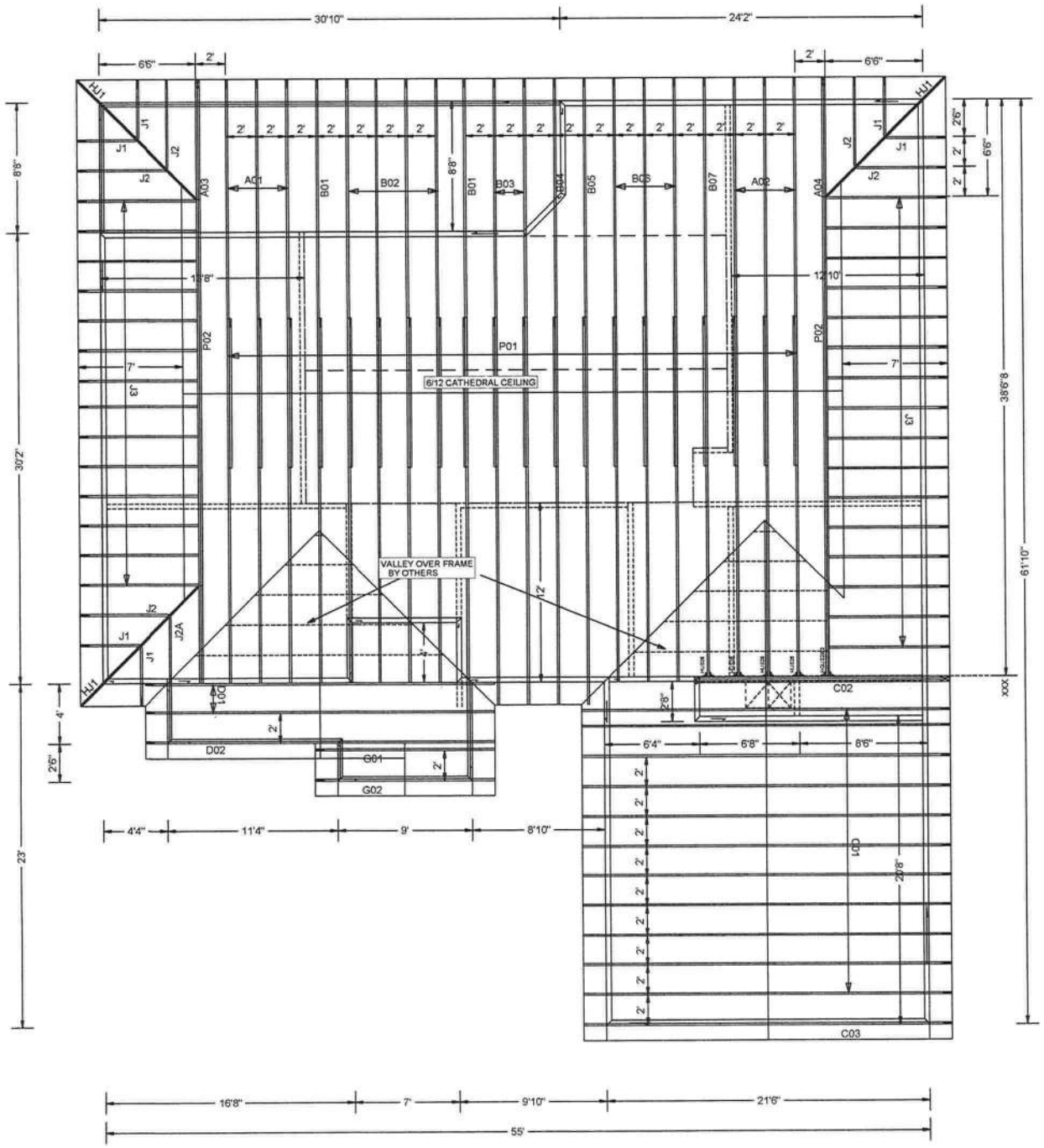

Total Truss Quantity = 109.

W.B. Howland Truss Co.
610 11th St. SW
Live Oak, FL 32064
(386) 362-1235
(386) 362-7124 (Fax)
howlandtruss@gmail.com

ROOF PITCH: 8/12
OVERHANG: 18" Plumb Typ
12" ON GABLE ENDS

CEILING: 6/12 @ GREAT ROOM & KITCHEN

EXT. WALLS: 2 X 4 X 9'

LOADING: 40 PSF
WIND LOAD: 130 MPH
EXPOSURE: C

DATE: 8/18/20

5 - TRUSS TO TRUSS CONNECTION:

4 HUS26
1 HGUS28-2

COLUMBIA COUNTY BUILDING DEPARTMENT
PLANS EXAMINER
Received for Code Compliance
FILE COPY

JOB NO:
20-4510

PAGE NO:
1 OF 1