YOONHWAK KIM
LICENSE
No. 86367
STATE OF FLORIDA
PROFESSIONAL ENGINEER

12/23/2020

This document has been electronically signed and sealed using a Digital Signature. Printed copies without an original signature must be verified using the original electronic version.

ALPINE
AN ITW COMPANY

FL REG# 278, Yoonhwak Kim, FL PE #86367

Alpine, an ITW Company
6750 Forum Drive, Suite 305
Orlando, FL 32821
Phone: (800)755-6001
www.alpineitw.com

Site Information:	**Page 1:**
Customer: W. B. Howland Company, Inc.	*Job Number:* 20-4682
Job Description: Reddoch	
Address: FL	

Job Engineering Criteria:	
Design Code: FBC 2017 RES	*IntelliVIEW Version:* 20.01.01A *JRef #:* 1X1f2150003
Wind Standard: ASCE 7-10 *Wind Speed (mph):* 130 *Building Type:* Closed	*Design Loading (psf):* 37.00

This package contains general notes pages, 43 truss drawing(s) and 5 detail(s).

Item	Drawing Number	Truss	Item	Drawing Number	Truss
1	358.20.1016.39577	A01	2	358.20.1016.41187	A02
3	358.20.1016.42837	A03	4	358.20.1016.57727	A04
5	358.20.1017.01057	A05	6	358.20.1017.03507	A06
7	358.20.1017.05797	A07	8	358.20.1017.07747	A08
9	358.20.1017.09860	A09	10	358.20.1017.11523	A10
11	358.20.1017.13190	A11	12	358.20.1017.22950	A12
13	358.20.1017.26550	A13	14	358.20.1017.30560	A14
15	358.20.1017.36613	A15	16	358.20.1017.38540	B01
17	358.20.1017.39857	B02	18	358.20.1017.41810	B03
19	358.20.1017.43403	B04	20	358.20.1017.45120	B05
21	358.20.1017.46467	B06	22	358.20.1017.48083	B07
23	358.20.1017.51023	C01	24	358.20.1017.53977	C02
25	358.20.1017.56397	C03	26	358.20.1017.57750	C04
27	358.20.1017.59563	D01	28	358.20.1018.07023	HJ1
29	358.20.1018.08757	J1	30	358.20.1018.10000	J3
31	358.20.1018.11233	J5	32	358.20.1018.12377	J7
33	358.20.1018.13590	J7A	34	358.20.1018.14857	J7B
35	358.20.1018.16827	J7C	36	358.20.1018.20047	P01
37	358.20.1018.23457	P02	38	358.20.1018.25860	P03
39	358.20.1018.28567	V1	40	358.20.1018.29870	V2
41	358.20.1018.31530	V3	42	358.20.1018.33760	V4
43	358.20.1018.38040	V5	44	BRCLBSUB0119	
45	A14015ENC101014		46	GBLLETIN0118	
47	PB160101014		48	VAL160101014	

General Notes

Truss Design Engineer Scope of Work, Design Assumptions and Design Responsibilities:
The design responsibilities assumed in the preparation of these design drawings are those specified in ANSI/TPI 1, Chapter 2; and the National Design Standard for Metal Plate Connected Wood Truss Construction, by the Truss Plate Institute. The truss component designs conform to the applicable provisions of ANSI/TPI 1 and NDS, the National Design Specification for Wood Construction by AWC. The truss component designs are based on the specified loading and dimension information furnished by others to the Truss Design Engineer. The Truss Design Engineer has no duty to independently verify the accuracy or completeness of the information provided by others and may rely on that information without liability. The responsibility for verification of that information remains with others neither employed nor controlled by the Truss Design Engineer. The Truss Design Engineer's seal and signature on the attached drawings, or cover page listing these drawings, indicates acceptance of professional engineering responsibility solely for the truss component designs and not for the technical information furnished by others which technical information and consequences thereof remain their sole responsibility.

The suitability and use of these drawings for any particular structure is the responsibility of the Building Designer in accordance with ANSI/TPI 1 Chapter 2. The Building Designer is responsible for determining that the dimensions and loads for each truss component match those required by the plans and by the actual use of the individual component, and for ascertaining that the loads shown on the drawings meet or exceed applicable building code requirements and any additional factors required in the particular application. Truss components using metal connector plates with integral teeth shall not be placed in environments that will cause the moisture content of the wood in which plates are embedded to exceed 19% and/or cause corrosion of connector plates and other metal fasteners.

The Truss Design Engineer shall not be responsible for items beyond the specific scope of the agreed contracted work set forth herein, including but not limited to: verifying the dimensions of the truss component, calculation of any of the truss component design loads, inspection of the truss components before or after installation, the design of temporary or permanent bracing and their attachment required in the roof and/or floor systems, the design of diaphragms or shear walls, the design of load transfer connections to and from diaphragms and shear walls, the design of load transfer to the foundation, the design of connections for truss components to their bearing supports, the design of the bearing supports, installation of the truss components, observation of the truss component installation process, review of truss assembly procedures, sequencing of the truss component installation, construction means and methods, site and/or worker safety in the installation of the truss components and/or its connections.

This document may be a high quality facsimile of the original engineering document which is a digitally signed electronic file with third party authentication. A wet or embossed seal copy of this engineering document is available upon request.

Temporary Lateral Restraint and Bracing:
Temporary lateral restraint and diagonal bracing shall be installed according to the provisions of BCSI chapters B1, B2, B7 and/or B10 (Building Component Safety Information, by TPI and SBCA), or as specified by the Building Designer or other Registered Design Professional. The required locations for lateral restraint and/or bracing depicted on these drawings are only for the permanent lateral support of the truss members to reduce buckling lengths, and do not apply to and may not be relied upon for the temporary stability of the truss components during their installation.

Permanent Lateral Restraint and Bracing:
The required locations for lateral restraint or bracing depicted on these drawings are for the permanent lateral support of the truss members to reduce buckling lengths. Permanent lateral support shall be installed according to the provisions of BCSI chapters B3, B7 and/or B10, or as specified by the Building Designer or other Registered Design Professional. These drawings do not depict or specify installation/erection bracing, wind bracing, portal bracing or similar building stability bracing which are parts of the overall building design to be specified, designed and detailed by the Building Designer.

Connector Plate Information:
Alpine connector plates are made of ASTM A653 or ASTM A1063 galvanized steel with the following designations, gauges and grades: W=Wave, 20ga, grade 40; H=High Strength, 20ga, grade 60; S=Super Strength, 18ga, grade 60. Information on model code compliance is contained in the ICC Evaluation Service report ESR-1118, available on-line at www.icc-es.org.

Fire Retardant Treated Lumber:
Fire retardant treated lumber must be properly re-dried and maintained below 19% or less moisture level through all stages of construction and usage. Fire retardant treated lumber may be more brittle than untreated lumber. Special handling care must be taken to prevent breakage during all handling activities.

General Notes (continued)

Key to Terms:
Information provided on drawings reflects a summary of the pertinent information required for the truss design. Detailed information on load cases, reactions, member lengths, forces and members requiring permanent lateral support may be found in calculation sheets available upon written request.

BCDL = Bottom Chord standard design Dead Load in pounds per square foot.
BCLL = Bottom Chord standard design Live Load in pounds per square foot.
CL = Certified lumber.
Des Ld = total of TCLL, TCDL, BCLL and BCDL Design Load in pounds per square foot.
FRT = Fire Retardant Treated lumber.
FRT-DB = D-Blaze Fire Retardant Treated lumber.
FRT-DC = Dricon Fire Retardant Treated lumber.
FRT-FP = FirePRO Fire Retardant Treated lumber.
FRT-FL = FlamePRO Fire Retardant Treated lumber.
FRT-FT = FlameTech Fire Retardant Treated lumber.
FRT-PG = PYRO-GUARD Fire Retardant Treated lumber.
g = green lumber.
HORZ(LL) = maximum Horizontal panel point deflection due to Live Load, in inches.
HORZ(TL) = maximum Horizontal panel point long term deflection in inches, due to Total Load, including creep adjustment.
HPL = additional Horizontal Load added to a truss Piece in pounds per linear foot or pounds.
Ic = Incised lumber.
FJ = Finger Jointed lumber.
L/# = user specified divisor for limiting span/deflection ratio for evaluation of actual L/defl value.
L/defl = ratio of Length between bearings, in inches, divided by the vertical Deflection due to creep, in inches, at the referenced panel point. Reported as 999 if greater than or equal to 999.
Loc = Location, starting location of left end of bearing or panel point (joint) location of deflection.
Max BC CSI = Maximum bending and axial Combined Stress Index for Bottom Chords for of all load cases.
Max TC CSI = Maximum bending and axial Combined Stress Index for Top Chords for of all load cases.
Max Web CSI= Maximum bending and axial Combined Stress Index for Webs for of all load cases.
NCBCLL = Non-Concurrent Bottom Chord design Live Load in pounds per square foot.
PL = additional Load applied at a user specified angle on a truss Piece in pounds per linear foot or pounds.
PLB = additional vertical load added to a Bottom chord Piece of a truss in pounds per linear foot or pounds
PLT = additional vertical load added to a Top chord Piece of a truss in pounds per linear foot or pounds.
PP = Panel Point.
R = maximum downward design Reaction, in pounds, from all specified gravity load cases, at the indicated location (Loc).
-R = maximum upward design Reaction, in pounds, from all specified gravity load cases, at the identified location (Loc).
Rh = maximum horizontal design Reaction in either direction, in pounds, from all specified gravity load cases, at the indicated location (Loc).
RL = maximum horizontal design Reaction in either direction, in pounds, from all specified non-gravity (wind or seismic) load cases, at the indicated location (Loc).
Rw = maximum downward design Reaction, in pounds, from all specified non-gravity (wind or seismic) load cases, at the identified location (Loc).
TCDL = Top Chord standard design Dead Load in pounds per square foot.
TCLL = Top Chord standard design Live Load in pounds per square foot.
U = maximum Upward design reaction, in pounds, from all specified non-gravity (wind or seismic) load cases, at the indicated location (Loc).
VERT(CL) = maximum Vertical panel point deflection in inches due to Live Load and Creep Component of Dead Load in inches.
VERT(CTL) = maximum Vertical panel point deflection ratios due to Live Load and Creep Component of Dead Load, and maximum long term Vertical panel point deflection in inches due to Total load, including creep adjustment.
VERT(LL) = maximum Vertical panel point deflection in inches due to Live Load.
VERT(TL) = maximum Vertical panel point long term deflection in inches due to Total load, including creep adjustment.
W = Width of non-hanger bearing, in inches.

Refer to ASCE-7 for Wind and Seismic abbreviations.
Uppercase Acronyms not explained above are as defined in TPI 1.

References:

1. AWC: American Wood Council; 222 Catoctin Circle SE, Suite 201; Leesburg, VA 20175; www.awc.org.
2. ICC: International Code Council; www.iccsafe.org.
3. Alpine, a division of ITW Building Components Group Inc.: 514 Earth City Expressway, Suite 242, Earth City, MO 63045; www.alpineitw.com.
4. TPI: Truss Plate Institute, 2670 Crain Highway, Suite 203, Waldorf, MD 20601; www.tpinst.org.
5. SBCA: Wood Truss Council of America, 6300 Enterprise Lane, Madison, WI 53719; www.sbcindustry.com.

SEQN: 394500 HIPS FROM: CDM	Ply: 1 Qty: 4	**Job Number:** 20-4682 Reddoch **Truss Label:** A01	Cust: R 215 JRef:1X1f2150003 T14 DrwNo: 358.20.1016.39577 / YK 12/23/2020

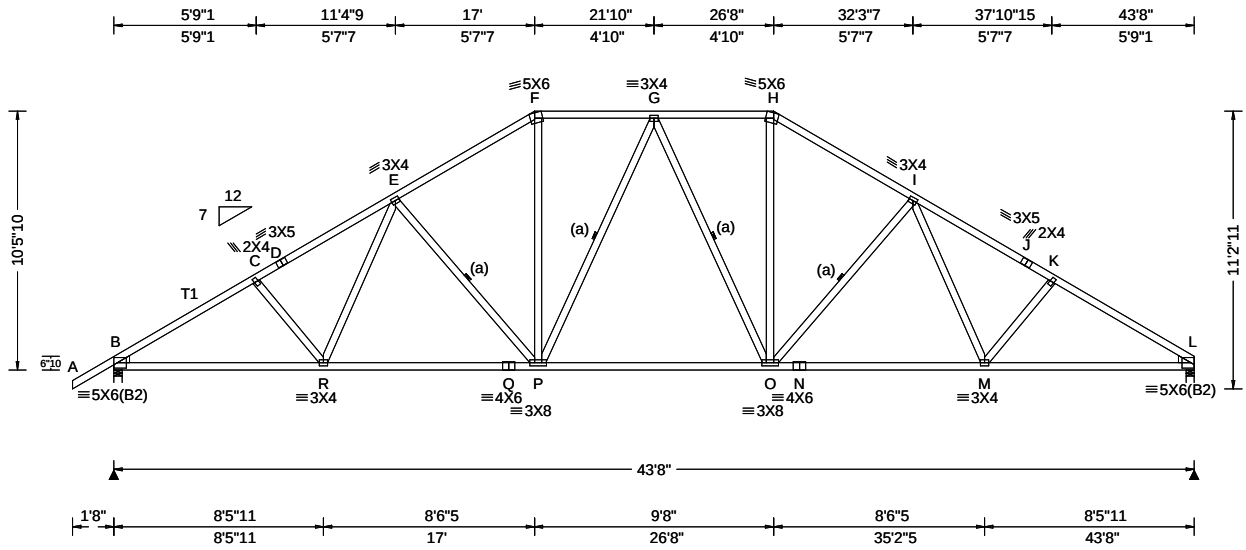

Loading Criteria (psf)

TCLL: 20.00
TCDL: 7.00
BCLL: 0.00
BCDL: 10.00
Des Ld: 37.00
NCBCLL: 10.00
Soffit: 2.00
Load Duration: 1.25
Spacing: 24.0 "

Wind Criteria

Wind Std: ASCE 7-10
Speed: 130 mph
Enclosure: Closed
Risk Category: II
EXP: C Kzt: NA
Mean Height: 15.00 ft
TCDL: 4.2 psf
BCDL: 5.0 psf
MWFRS Parallel Dist: h to 2h
C&C Dist a: 4.37 ft
Loc. from endwall: not in 13.00 ft
GCpi: 0.18
Wind Duration: 1.60

Snow Criteria (Pg,Pf in PSF)

Pg: NA Ct: NA CAT: NA
Pf: NA Ce: NA
Lu: NA Cs: NA
Snow Duration: NA

Building Code:
FBC 2017 RES
TPI Std: 2014
Rep Fac: Yes
FT/RT:20(0)/10(0)
Plate Type(s):
WAVE

Defl/CSI Criteria

PP Deflection in	loc	L/defl	L/#
VERT(LL): 0.231	G	999	240
VERT(CL): 0.392	G	999	180
HORZ(LL): 0.103	M	-	-
HORZ(TL): 0.174	M	-	-

Creep Factor: 2.0
Max TC CSI: 0.863
Max BC CSI: 0.567
Max Web CSI: 0.403

VIEW Ver: 20.01.01A.0724.11

▲ Maximum Reactions (lbs)

Loc	Gravity R+	/ R-	/ Rh	Non-Gravity / Rw	/ U	/ RL
B	2023	/-	/-	/1005	/81	/306
L	1918	/-	/-	/920	/69	/-

Wind reactions based on MWFRS
B Brg Width = 4.0 Min Req = 1.7
L Brg Width = 4.0 Min Req = 1.6
Bearings B & L are a rigid surface.
Members not listed have forces less than 375#

Maximum Top Chord Forces Per Ply (lbs)

Chords	Tens.	Comp.	Chords	Tens.	Comp.
B - C	735	- 3224	G - H	636	- 2091
C - D	722	- 3040	H - I	690	- 2494
D - E	745	- 3009	I - J	771	- 3023
E - F	683	- 2492	J - K	749	- 3054
F - G	640	- 2089	K - L	765	- 3241

Maximum Bot Chord Forces Per Ply (lbs)

Chords	Tens.	Comp.	Chords	Tens.	Comp.
B - R	2681	- 567	O - N	2433	- 462
R - Q	2427	- 463	N - M	2433	- 462
Q - P	2427	- 463	M - L	2703	- 585
P - O	2148	- 351			

Maximum Web Forces Per Ply (lbs)

Webs	Tens.	Comp.	Webs	Tens.	Comp.
R - E	380	- 63	O - H	921	- 201
E - P	218	- 541	O - I	221	- 547
F - P	920	- 198	I - M	384	- 90

Lumber

Top chord: 2x4 SP #2; T1 2x4 SP M-31;
Bot chord: 2x4 SP M-31;
Webs: 2x4 SP #3;
Lt Wedge: 2x4 SP #3;Rt Wedge: 2x4 SP #3;

Bracing

(a) Continuous lateral restraint equally spaced on member.

Loading

Truss passed check for 20 psf additional bottom chord live load in areas with 42"-high x 24"-wide clearance.

Wind

Wind loads based on MWFRS with additional C&C member design.

Additional Notes

The overall height of this truss excluding overhang is 10-5-10.

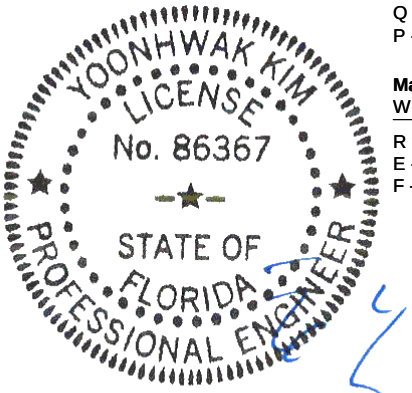

FL REG# 278, Yoonhwak Kim, FL PE #86367
12/23/2020

****WARNING**** READ AND FOLLOW ALL NOTES ON THIS DRAWING!
****IMPORTANT**** FURNISH THIS DRAWING TO ALL CONTRACTORS INCLUDING THE INSTALLERS

Trusses require extreme care in fabricating, handling, shipping, installing and bracing. Refer to and follow the latest edition of BCSI (Building Component Safety Information, by TPI and SBCA) for safety practices prior to performing these functions. Installers shall provide temporary bracing per BCSI. Unless noted otherwise, top chord shall have properly attached structural sheathing and bottom chord shall have a properly attached rigid ceiling. Locations shown for permanent lateral restraint of webs shall have bracing installed per BCSI sections B3, B7, or B10, as applicable. Apply plates to each face of truss and position as shown above and on the Joint Details, unless noted otherwise. Refer to drawings 160A-Z for standard plate positions. Refer to job's General Notes page for additional information.

Alpine, a division of ITW Building Components Group Inc. shall not be responsible for any deviation from this drawing, any failure to build the truss in conformance with ANSI/TPI 1, or for handling, shipping, installation and bracing of trusses. A seal on this drawing or cover page listing this drawing, indicates acceptance of professional engineering responsibility solely for the design shown. The suitability and use of this drawing for any structure is the responsibility of the Building Designer per ANSI/TPI 1 Sec.2.

For more information see these web sites: Alpine: alpineitw.com; TPI: tpinst.org; SBCA: sbcindustry.com; ICC: iccsafe.org; AWC: awc.org

ALPINE AN ITW COMPANY
6750 Forum Drive
Suite 305
Orlando FL, 32821

SEQN: 394501 HIPS FROM: CDM	Ply: 1 Qty: 1	**Job Number:** 20-4682 Reddoch **Truss Label:** A02	Cust: R 215 JRef:1X1f2150003 T45 DrwNo: 358.20.1016.41187 / YK 12/23/2020

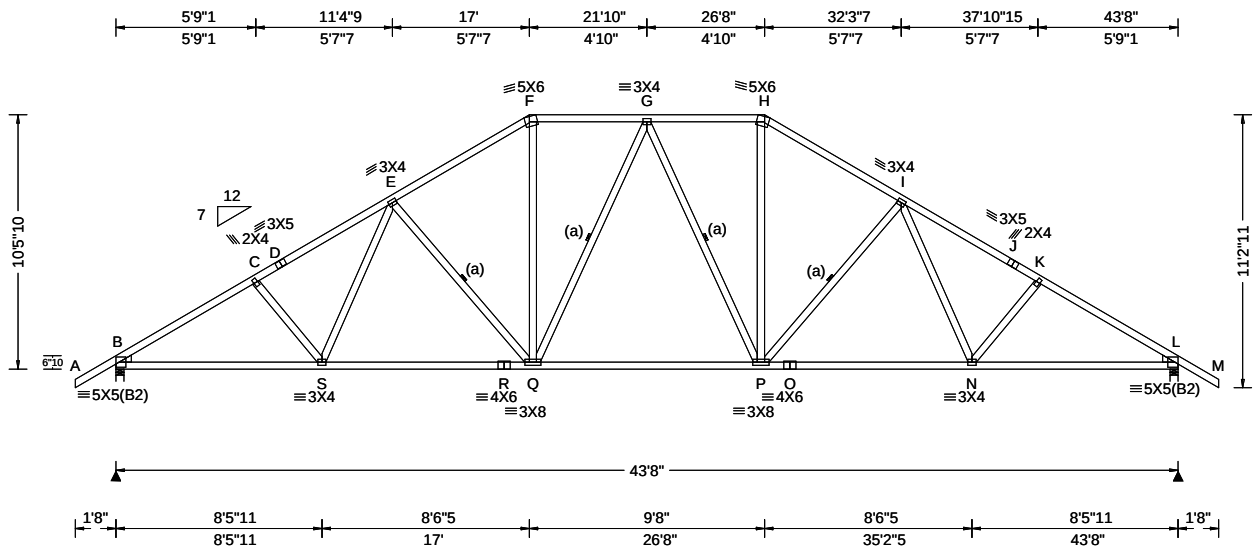

Loading Criteria (psf)

TCLL: 20.00
TCDL: 7.00
BCLL: 0.00
BCDL: 10.00
Des Ld: 37.00
NCBCLL: 10.00
Soffit: 2.00
Load Duration: 1.25
Spacing: 24.0 "

Wind Criteria

Wind Std: ASCE 7-10
Speed: 130 mph
Enclosure: Closed
Risk Category: II
EXP: C Kzt: NA
Mean Height: 15.00 ft
TCDL: 4.2 psf
BCDL: 5.0 psf
MWFRS Parallel Dist: h to 2h
C&C Dist a: 4.37 ft
Loc. from endwall: not in 13.00 ft
GCpi: 0.18
Wind Duration: 1.60

Snow Criteria (Pg,Pf in PSF)

Pg: NA Ct: NA CAT: NA
Pf: NA Ce: NA
Lu: NA Cs: NA
Snow Duration: NA

Building Code:
FBC 2017 RES
TPI Std: 2014
Rep Fac: Yes
FT/RT:20(0)/10(0)
Plate Type(s):
WAVE

Defl/CSI Criteria

PP Deflection in	loc	L/defl	L/#
VERT(LL): 0.180	G	999	240
VERT(CL): 0.338	G	999	180
HORZ(LL): 0.078	N	-	-
HORZ(TL): 0.146	N	-	-

Creep Factor: 2.0
Max TC CSI: 0.817
Max BC CSI: 0.439
Max Web CSI: 0.396

VIEW Ver: 20.01.01A.0724.11

▲ Maximum Reactions (lbs)

Loc	Gravity R+	/ R-	/ Rh	Non-Gravity / Rw	/ U	/ RL
B	1765	/-	/-	/1006	/80	/324
L	1765	/-	/-	/1006	/80	/-

Wind reactions based on MWFRS
B Brg Width = 4.0 Min Req = 1.5
L Brg Width = 4.0 Min Req = 1.5
Bearings B & L are a rigid surface.
Members not listed have forces less than 375#

Maximum Top Chord Forces Per Ply (lbs)

Chords	Tens.	Comp.	Chords	Tens.	Comp.
B - C	729	- 2734	G - H	634	- 1709
C - D	717	- 2547	H - I	680	- 2054
D - E	739	- 2516	I - J	738	- 2516
E - F	680	- 2054	J - K	716	- 2547
F - G	634	- 1709	K - L	728	- 2734

Maximum Bot Chord Forces Per Ply (lbs)

Chords	Tens.	Comp.	Chords	Tens.	Comp.
B - S	2266	- 512	P - O	2023	- 429
S - R	2023	- 408	O - N	2023	- 429
R - Q	2023	- 408	N - L	2266	- 533
Q - P	1768	- 315			

Maximum Web Forces Per Ply (lbs)

Webs	Tens.	Comp.	Webs	Tens.	Comp.
S - E	378	- 64	P - H	701	- 198
E - Q	219	- 499	P - I	219	- 499
F - Q	701	- 198	I - N	378	- 63

Lumber

Top chord: 2x4 SP #2;
Bot chord: 2x4 SP M-31;
Webs: 2x4 SP #3;
Lt Wedge: 2x4 SP #3;Rt Wedge: 2x4 SP #3;

Bracing

(a) Continuous lateral restraint equally spaced on member.

Wind

Wind loads based on MWFRS with additional C&C member design.

Additional Notes

The overall height of this truss excluding overhang is 10-5-10.

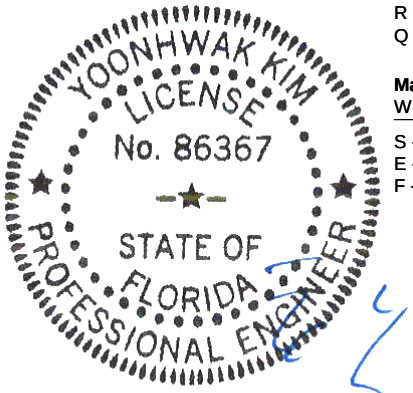

FL REG# 278, Yoonhwak Kim, FL PE #86367
12/23/2020

****WARNING**** READ AND FOLLOW ALL NOTES ON THIS DRAWING!
****IMPORTANT**** FURNISH THIS DRAWING TO ALL CONTRACTORS INCLUDING THE INSTALLERS

Trusses require extreme care in fabricating, handling, shipping, installing and bracing. Refer to and follow the latest edition of BCSI (Building Component Safety Information, by TPI and SBCA) for safety practices prior to performing these functions. Installers shall provide temporary bracing per BCSI. Unless noted otherwise, top chord shall have properly attached structural sheathing and bottom chord shall have a properly attached rigid ceiling. Locations shown for permanent lateral restraint of webs shall have bracing installed per BCSI sections B3, B7, or B10, as applicable. Apply plates to each face of truss and position as shown above and on the Joint Details, unless noted otherwise. Refer to drawings 160A-Z for standard plate positions. Refer to job's General Notes page for additional information.

Alpine, a division of ITW Building Components Group Inc. shall not be responsible for any deviation from this drawing, any failure to build the truss in conformance with ANSI/TPI 1, or for handling, shipping, installation and bracing of trusses. A seal on this drawing or cover page listing this drawing, indicates acceptance of professional engineering responsibility solely for the design shown. The suitability and use of this drawing for any structure is the responsibility of the Building Designer per ANSI/TPI 1 Sec.2.

For more information see these web sites: Alpine: alpineitw.com; TPI: tpinst.org; SBCA: sbcindustry.com; ICC: iccsafe.org; AWC: awc.org

ALPINE AN ITW COMPANY
6750 Forum Drive
Suite 305
Orlando FL, 32821

SEQN: 394502 COMN FROM: CDM	Ply: 1 Qty: 3	**Job Number:** 20-4682 Reddoch **Truss Label:** A03	Cust: R 215 JRef:1X1f2150003 T12 DrwNo: 358.20.1016.42837 / YK 12/23/2020

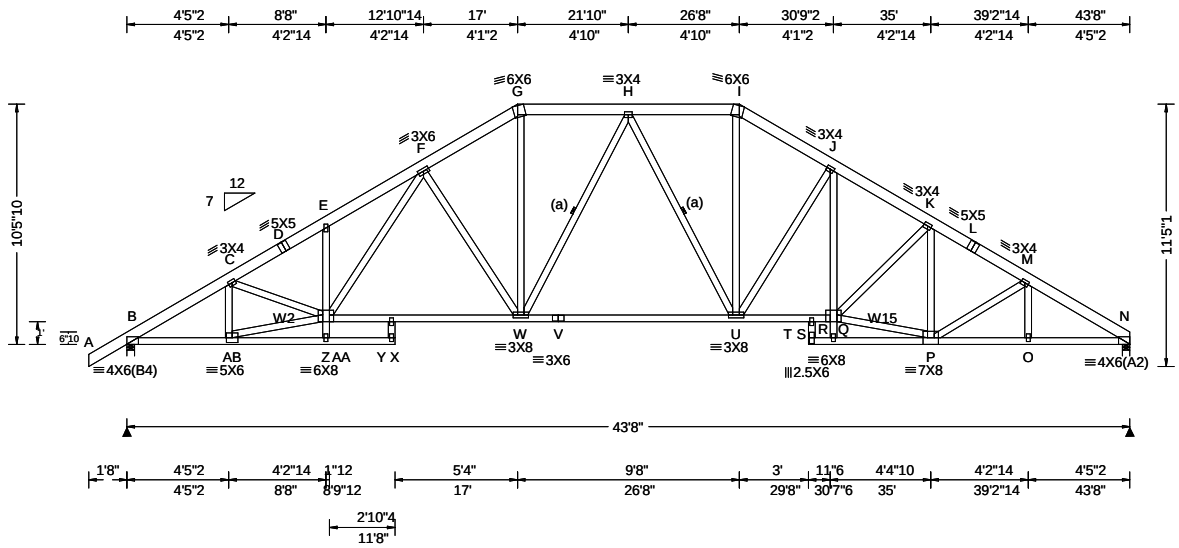

Loading Criteria (psf)

TCLL: 20.00
TCDL: 7.00
BCLL: 0.00
BCDL: 10.00
Des Ld: 37.00
NCBCLL: 10.00
Soffit: 2.00
Load Duration: 1.25
Spacing: 24.0 "

Wind Criteria

Wind Std: ASCE 7-10
Speed: 130 mph
Enclosure: Closed
Risk Category: II
EXP: C Kzt: NA
Mean Height: 15.00 ft
TCDL: 4.2 psf
BCDL: 5.0 psf
MWFRS Parallel Dist: h to 2h
C&C Dist a: 4.37 ft
Loc. from endwall: not in 13.00 ft
GCpi: 0.18
Wind Duration: 1.60

Snow Criteria (Pg,Pf in PSF)

Pg: NA Ct: NA CAT: NA
Pf: NA Ce: NA
Lu: NA Cs: NA
Snow Duration: NA

Building Code:
FBC 2017 RES
TPI Std: 2014
Rep Fac: Yes
FT/RT:20(0)/10(0)
Plate Type(s):
WAVE

Defl/CSI Criteria

PP Deflection in	loc	L/defl	L/#
VERT(LL): 0.161	H	999	240
VERT(CL): 0.281	H	999	180
HORZ(LL): 0.105	O	-	-
HORZ(TL): 0.184	O	-	-

Creep Factor: 2.0
Max TC CSI: 0.177
Max BC CSI: 0.542
Max Web CSI: 0.813

VIEW Ver: 20.01.01A.0724.11

▲ Maximum Reactions (lbs)

Loc	Gravity R+	/ R-	/ Rh	Non-Gravity / Rw	/ U	/ RL
B	1962	/-	/-	/1006	/80	/305
N	1802	/-	/-	/920	/68	/-

Wind reactions based on MWFRS
B Brg Width = 4.0 Min Req = 1.5
N Brg Width = 4.0 Min Req = 1.5
Bearings B & N are a rigid surface.
Members not listed have forces less than 375#

Maximum Top Chord Forces Per Ply (lbs)

Chords	Tens.	Comp.	Chords	Tens.	Comp.
B - C	721	- 3089	H - I	669	- 2184
C - D	867	- 3722	I - J	733	- 2552
D - E	875	- 3655	J - K	803	- 2987
E - F	960	- 3744	K - L	751	- 2792
F - G	727	- 2613	L - M	742	- 2859
G - H	670	- 2228	M - N	756	- 3014

Maximum Bot Chord Forces Per Ply (lbs)

Chords	Tens.	Comp.	Chords	Tens.	Comp.
B -AB	2559	- 560	U - S	2519	- 487
Z - Y	2567	- 476	S - Q	2472	- 480
Y - W	2594	- 491	P - O	2506	- 587
W - V	2257	- 385	O - N	2506	- 587
V - U	2257	- 385			

Maximum Web Forces Per Ply (lbs)

Webs	Tens.	Comp.	Webs	Tens.	Comp.
C -AB	167	- 669	U - I	946	- 231
C - Z	694	- 92	U - J	255	- 659
AB- Z	2558	- 550	J - Q	586	- 163
Z - F	1092	- 268	Q - P	2456	- 519
F - W	253	- 695	K - P	101	- 430
G - W	987	- 232			

Lumber

Top chord: 2x6 SP 2400f-2.0E;
Bot chord: 2x4 SP M-31;
Webs: 2x4 SP #3; W2,W15 2x4 SP #2;

Bracing

(a) Continuous lateral restraint equally spaced on member.

Plating Notes

All plates are 2X4 except as noted.

Loading

Truss passed check for 20 psf additional bottom chord live load in areas with 42"-high x 24"-wide clearance.

Wind

Wind loads based on MWFRS with additional C&C member design.

Additional Notes

The overall height of this truss excluding overhang is 10-5-10.

Laterally brace top chord below filler and bottom chord above filler at 24" o.c., including a lateral brace at chord ends (If no rigid diaphragm exists at that point).

YOONHWAK KIM
LICENSE
No. 86367
STATE OF
FLORIDA
PROFESSIONAL ENGINEER

FL REG# 278, Yoonhwak Kim, FL PE #86367
12/23/2020

****WARNING**** READ AND FOLLOW ALL NOTES ON THIS DRAWING!
****IMPORTANT**** FURNISH THIS DRAWING TO ALL CONTRACTORS INCLUDING THE INSTALLERS

Trusses require extreme care in fabricating, handling, shipping, installing and bracing. Refer to and follow the latest edition of BCSI (Building Component Safety Information, by TPI and SBCA) for safety practices prior to performing these functions. Installers shall provide temporary bracing per BCSI. Unless noted otherwise, top chord shall have properly attached structural sheathing and bottom chord shall have a properly attached rigid ceiling. Locations shown for permanent lateral restraint of webs shall have bracing installed per BCSI sections B3, B7, or B10, as applicable. Apply plates to each face of truss and position as shown above and on the Joint Details, unless noted otherwise. Refer to drawings 160A-Z for standard plate positions. Refer to job's General Notes page for additional information.

Alpine, a division of ITW Building Components Group Inc. shall not be responsible for any deviation from this drawing, any failure to build the truss in conformance with ANSI/TPI 1, or for handling, shipping, installation and bracing of trusses. A seal on this drawing or cover page listing this drawing, indicates acceptance of professional engineering responsibility solely for the design shown. The suitability and use of this drawing for any structure is the responsibility of the Building Designer per ANSI/TPI 1 Sec.2.

For more information see these web sites: Alpine: alpineitw.com; TPI: tpinst.org; SBCA: sbcindustry.com; ICC: iccsafe.org; AWC: awc.org

ALPINE
AN ITW COMPANY
6750 Forum Drive
Suite 305
Orlando FL, 32821

SEQN: 394503 COMN FROM: CDM	Ply: 1 Qty: 2	**Job Number:** 20-4682 Reddoch **Truss Label:** A04	Cust: R 215 JRef:1X1f2150003 T2 DrwNo: 358.20.1016.57727 / YK 12/23/2020

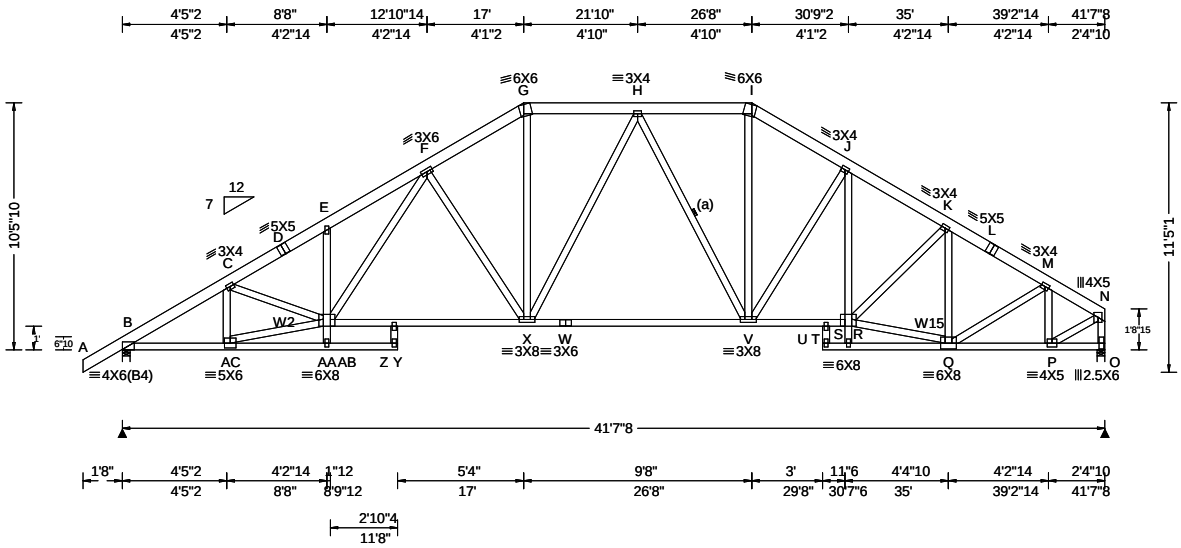

Loading Criteria (psf)

TCLL: 20.00
TCDL: 7.00
BCLL: 0.00
BCDL: 10.00
Des Ld: 37.00
NCBCLL: 10.00
Soffit: 2.00
Load Duration: 1.25
Spacing: 24.0 "

Wind Criteria

Wind Std: ASCE 7-10
Speed: 130 mph
Enclosure: Closed
Risk Category: II
EXP: C Kzt: NA
Mean Height: 15.00 ft
TCDL: 4.2 psf
BCDL: 5.0 psf
MWFRS Parallel Dist: h to 2h
C&C Dist a: 4.16 ft
Loc. from endwall: not in 13.00 ft
GCpi: 0.18
Wind Duration: 1.60

Snow Criteria (Pg,Pf in PSF)

Pg: NA Ct: NA CAT: NA
Pf: NA Ce: NA
Lu: NA Cs: NA
Snow Duration: NA

Building Code:
FBC 2017 RES
TPI Std: 2014
Rep Fac: Yes
FT/RT:20(0)/10(0)
Plate Type(s):
WAVE

Defl/CSI Criteria

PP Deflection in	loc	L/defl	L/#
VERT(LL): 0.141	Y	999	240
VERT(CL): 0.245	Y	999	180
HORZ(LL): 0.087	O	-	-
HORZ(TL): 0.153	O	-	-

Creep Factor: 2.0
Max TC CSI: 0.168
Max BC CSI: 0.530
Max Web CSI: 0.805

VIEW Ver: 20.01.01A.0724.11

▲ Maximum Reactions (lbs)

Loc	Gravity R+	/ R-	/ Rh	Non-Gravity / Rw	/ U	/ RL
B	1883	/-	/-	/973	/114	/280
O	1725	/-	/-	/853	/66	/-

Wind reactions based on MWFRS
B Brg Width = 4.0 Min Req = 1.5
O Brg Width = 4.0 Min Req = 1.5
Bearings B & O are a rigid surface.
Members not listed have forces less than 375#

Maximum Top Chord Forces Per Ply (lbs)

Chords	Tens.	Comp.	Chords	Tens.	Comp.
B - C	685	- 2948	H - I	616	- 1955
C - D	831	- 3535	I - J	673	- 2292
D - E	839	- 3468	J - K	708	- 2564
E - F	924	- 3555	K - L	603	- 2191
F - G	690	- 2444	L - M	593	- 2258
G - H	638	- 2080	M - N	426	- 1648

Maximum Bot Chord Forces Per Ply (lbs)

Chords	Tens.	Comp.	Chords	Tens.	Comp.
B -AC	2439	- 566	W - V	2071	- 379
AA- Z	2419	- 481	V - T	2158	- 436
Z - X	2443	- 496	T - R	2116	- 430
X - W	2071	- 379	Q - P	1449	- 359

Maximum Web Forces Per Ply (lbs)

Webs	Tens.	Comp.	Webs	Tens.	Comp.
C -AC	168	- 636	V - J	195	- 408
C -AA	647	- 93	R - Q	1914	- 424
AC-AA	2441	- 555	K - Q	166	- 651
AA- F	1070	- 270	Q - M	542	- 90
F - X	254	- 688	M - P	221	- 780
G - X	908	- 214	P - N	1620	- 399
V - I	825	- 201	N - O	435	- 1701

Lumber

Top chord: 2x6 SP 2400f-2.0E;
Bot chord: 2x4 SP M-31;
Webs: 2x4 SP #3; W2,W15 2x4 SP #2;

Bracing

(a) Continuous lateral restraint equally spaced on member.

Plating Notes

All plates are 2X4 except as noted.

Loading

Truss passed check for 20 psf additional bottom chord live load in areas with 42"-high x 24"-wide clearance.

Wind

Wind loads based on MWFRS with additional C&C member design.

Right end vertical not exposed to wind pressure.

Additional Notes

The overall height of this truss excluding overhang is 10-5-10.

Laterally brace top chord below filler and bottom chord above filler at 24" o.c., including a lateral brace at chord ends (If no rigid diaphragm exists at that point).

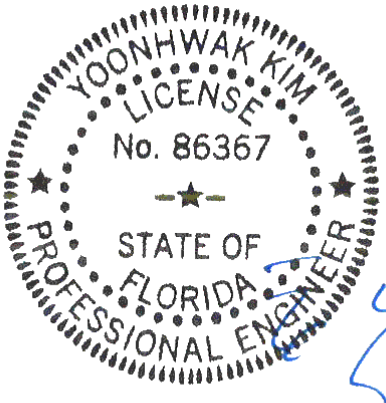

FL REG# 278, Yoonhwak Kim, FL PE #86367
12/23/2020

****WARNING**** READ AND FOLLOW ALL NOTES ON THIS DRAWING!
****IMPORTANT**** FURNISH THIS DRAWING TO ALL CONTRACTORS INCLUDING THE INSTALLERS

Trusses require extreme care in fabricating, handling, shipping, installing and bracing. Refer to and follow the latest edition of BCSI (Building Component Safety Information, by TPI and SBCA) for safety practices prior to performing these functions. Installers shall provide temporary bracing per BCSI. Unless noted otherwise, top chord shall have properly attached structural sheathing and bottom chord shall have a properly attached rigid ceiling. Locations shown for permanent lateral restraint of webs shall have bracing installed per BCSI sections B3, B7, or B10, as applicable. Apply plates to each face of truss and position as shown above and on the Joint Details, unless noted otherwise. Refer to drawings 160A-Z for standard plate positions. Refer to job's General Notes page for additional information.

Alpine, a division of ITW Building Components Group Inc. shall not be responsible for any deviation from this drawing, any failure to build the truss in conformance with ANSI/TPI 1, or for handling, shipping, installation and bracing of trusses. A seal on this drawing or cover page listing this drawing, indicates acceptance of professional engineering responsibility solely for the design shown. The suitability and use of this drawing for any structure is the responsibility of the Building Designer per ANSI/TPI 1 Sec.2.

For more information see these web sites: Alpine: alpineitw.com; TPI: tpinst.org; SBCA: sbcindustry.com; ICC: iccsafe.org; AWC: awc.org

ALPINE AN ITW COMPANY
6750 Forum Drive
Suite 305
Orlando FL, 32821

SEQN: 394504 COMN	Ply: 1	**Job Number:** 20-4682	Cust: R 215 JRef:1X1f2150003 T17
FROM: CDM	Qty: 1	Reddoch	DrwNo: 358.20.1017.01057
		Truss Label: A05	/ YK 12/23/2020

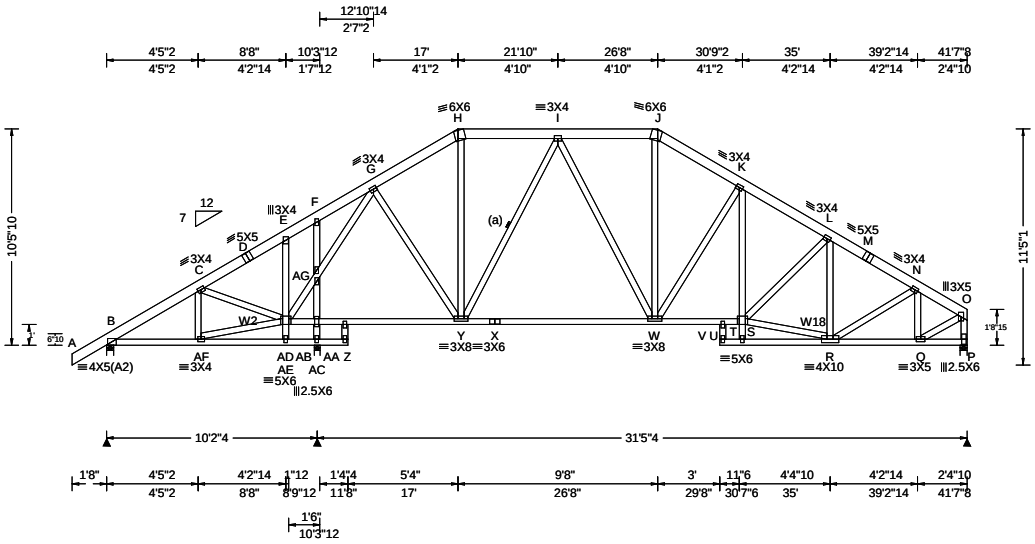

Loading Criteria (psf)	**Wind Criteria**	**Snow Criteria** (Pg,Pf in PSF)	**Defl/CSI Criteria**
TCLL: 20.00	Wind Std: ASCE 7-10	Pg: NA Ct: NA CAT: NA	PP Deflection in loc L/defl L/#
TCDL: 7.00	Speed: 130 mph	Pf: NA Ce: NA	VERT(LL): 0.052 S 999 240
BCLL: 0.00	Enclosure: Closed	Lu: NA Cs: NA	VERT(CL): 0.096 S 999 180
BCDL: 10.00	Risk Category: II	Snow Duration: NA	HORZ(LL): 0.036 P - -
Des Ld: 37.00	EXP: C Kzt: NA		HORZ(TL): 0.067 P - -
NCBCLL: 10.00	Mean Height: 15.00 ft	Building Code:	Creep Factor: 2.0
Soffit: 2.00	TCDL: 4.2 psf	FBC 2017 RES	Max TC CSI: 0.294
Load Duration: 1.25	BCDL: 5.0 psf	TPI Std: 2014	Max BC CSI: 0.317
Spacing: 24.0 "	MWFRS Parallel Dist: h to 2h	Rep Fac: Yes	Max Web CSI: 0.875
	C&C Dist a: 4.16 ft	FT/RT:20(0)/10(0)	
	Loc. from endwall: not in 13.00 ft	Plate Type(s):	
	GCpi: 0.18	WAVE	VIEW Ver: 20.01.01A.0724.11
	Wind Duration: 1.60		

▲ Maximum Reactions (lbs)

	Gravity			Non-Gravity		
Loc	R+	/ R-	/ Rh	/ Rw	/ U	/ RL
B	680	/-	/-	/366	/30	/280
AC	1339	/-	/-	/800	/117	/-
P	1255	/-	/-	/725	/66	/-

Wind reactions based on MWFRS
B Brg Width = 4.0 Min Req = 1.5
AC Brg Width = 3.5 Min Req = 1.5
P Brg Width = 4.0 Min Req = 1.5
Bearings B, AC, & P are a rigid surface.
Members not listed have forces less than 375#

Maximum Top Chord Forces Per Ply (lbs)

Chords	Tens.	Comp.	Chords	Tens.	Comp.
B - C	193	- 808	I - J	469	- 1153
C - D	156	- 563	J - K	506	- 1378
D - E	164	- 496	K - L	540	- 1674
F - G	275	- 626	L - M	473	- 1495
G - H	409	- 1052	M - N	464	- 1562
H - I	401	- 893	N - O	340	- 1190

Maximum Bot Chord Forces Per Ply (lbs)

Chords	Tens.	Comp.	Chords	Tens.	Comp.
B -AF	639	- 153	X - W	1084	- 189
AD-AB	634	- 92	W - U	1392	- 295
AB-AA	635	- 92	U - S	1367	- 290
AA- Y	656	- 101	R - Q	1039	- 282
Y - X	1084	- 189			

Maximum Web Forces Per Ply (lbs)

Webs	Tens.	Comp.	Webs	Tens.	Comp.
AF-AD	625	- 145	Y - I	156	- 420
E -AD	498	- 92	W - J	396	- 123
AD-AG	84	- 514	W - K	197	- 463
AG-AB	332	- 1107	S - R	1311	- 311
AG- G	128	- 641	L - R	117	- 392
F -AG	290	- 961	N - Q	176	- 537
AB-AC	314	- 1083	Q - O	1164	- 313
G - Y	426	- 58	O - P	348	- 1234

Lumber

Top chord: 2x6 SP 2400f-2.0E;
Bot chord: 2x4 SP M-31;
Webs: 2x4 SP #3; W2,W18 2x4 SP #2;

Bracing

(a) Continuous lateral restraint equally spaced on member.

Plating Notes

All plates are 2X4 except as noted.

Wind

Wind loads based on MWFRS with additional C&C member design.

Right end vertical not exposed to wind pressure.

Additional Notes

The overall height of this truss excluding overhang is 10-5-10.

Laterally brace top chord below filler and bottom chord above filler at 24" o.c., including a lateral brace at chord ends (If no rigid diaphragm exists at that point).

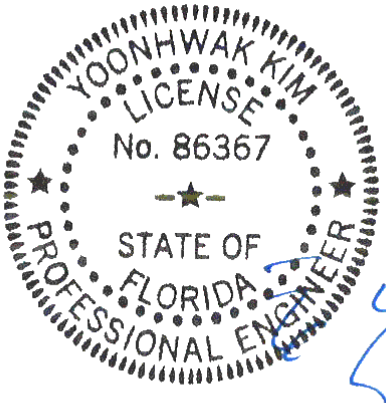

FL REG# 278, Yoonhwak Kim, FL PE #86367
12/23/2020

****WARNING**** READ AND FOLLOW ALL NOTES ON THIS DRAWING!
****IMPORTANT**** FURNISH THIS DRAWING TO ALL CONTRACTORS INCLUDING THE INSTALLERS

Trusses require extreme care in fabricating, handling, shipping, installing and bracing. Refer to and follow the latest edition of BCSI (Building Component Safety Information, by TPI and SBCA) for safety practices prior to performing these functions. Installers shall provide temporary bracing per BCSI. Unless noted otherwise, top chord shall have properly attached structural sheathing and bottom chord shall have a properly attached rigid ceiling. Locations shown for permanent lateral restraint of webs shall have bracing installed per BCSI sections B3, B7, or B10, as applicable. Apply plates to each face of truss and position as shown above and on the Joint Details, unless noted otherwise. Refer to drawings 160A-Z for standard plate positions. Refer to job's General Notes page for additional information.

Alpine, a division of ITW Building Components Group Inc. shall not be responsible for any deviation from this drawing, any failure to build the truss in conformance with ANSI/TPI 1, or for handling, shipping, installation and bracing of trusses. A seal on this drawing or cover page listing this drawing, indicates acceptance of professional engineering responsibility solely for the design shown. The suitability and use of this drawing for any structure is the responsibility of the Building Designer per ANSI/TPI 1 Sec.2.

For more information see these web sites: Alpine: alpineitw.com; TPI: tpinst.org; SBCA: sbcindustry.com; ICC: iccsafe.org; AWC: awc.org

ALPINE AN ITW COMPANY
6750 Forum Drive
Suite 305
Orlando FL, 32821

SEQN: 394505 HIPS FROM: CDM	Ply: 1 Qty: 1	**Job Number:** 20-4682 Reddoch **Truss Label:** A06	Cust: R 215 JRef:1X1f2150003 T19 DrwNo: 358.20.1017.03507 / YK 12/23/2020

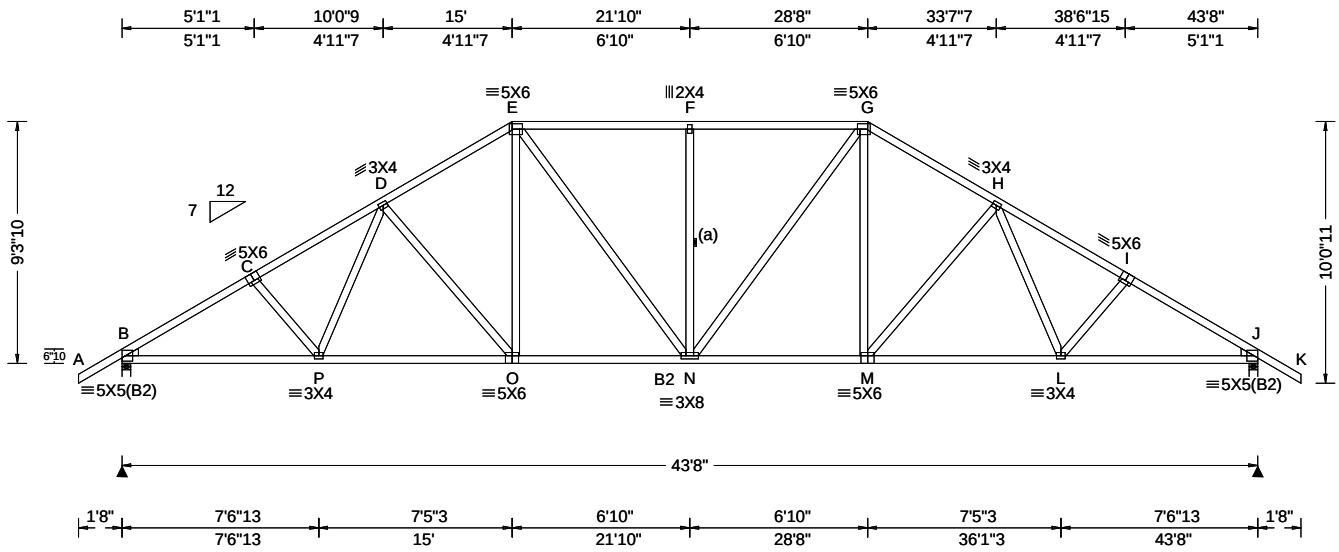

Loading Criteria (psf)

TCLL: 20.00
TCDL: 7.00
BCLL: 0.00
BCDL: 10.00
Des Ld: 37.00
NCBCLL: 10.00
Soffit: 2.00
Load Duration: 1.25
Spacing: 24.0 "

Wind Criteria

Wind Std: ASCE 7-10
Speed: 130 mph
Enclosure: Closed
Risk Category: II
EXP: C Kzt: NA
Mean Height: 15.00 ft
TCDL: 4.2 psf
BCDL: 5.0 psf
MWFRS Parallel Dist: h to 2h
C&C Dist a: 4.37 ft
Loc. from endwall: not in 13.00 ft
GCpi: 0.18
Wind Duration: 1.60

Snow Criteria (Pg,Pf in PSF)

Pg: NA Ct: NA CAT: NA
Pf: NA Ce: NA
Lu: NA Cs: NA
Snow Duration: NA

Building Code:
FBC 2017 RES
TPI Std: 2014
Rep Fac: Yes
FT/RT:20(0)/10(0)
Plate Type(s):
WAVE

Defl/CSI Criteria

PP Deflection in	loc	L/defl	L/#
VERT(LL): 0.191	F	999	240
VERT(CL): 0.359	F	999	180
HORZ(LL): 0.083	L	-	-
HORZ(TL): 0.156	L	-	-

Creep Factor: 2.0
Max TC CSI: 0.817
Max BC CSI: 0.719
Max Web CSI: 0.498

VIEW Ver: 20.01.01A.0724.11

▲Maximum Reactions (lbs)

Loc	Gravity R+	/ R-	/ Rh	Non-Gravity / Rw	/ U	/ RL
B	1765	/-	/-	/1000	/89	/292
J	1765	/-	/-	/1000	/89	/-

Wind reactions based on MWFRS
B Brg Width = 4.0 Min Req = 1.5
J Brg Width = 4.0 Min Req = 1.5
Bearings B & J are a rigid surface.
Members not listed have forces less than 375#

Maximum Top Chord Forces Per Ply (lbs)

Chords	Tens.	Comp.	Chords	Tens.	Comp.
B - C	745	- 2736	F - G	721	- 2028
C - D	754	- 2573	G - H	716	- 2185
D - E	716	- 2185	H - I	753	- 2573
E - F	721	- 2028	I - J	744	- 2736

Maximum Bot Chord Forces Per Ply (lbs)

Chords	Tens.	Comp.	Chords	Tens.	Comp.
B - P	2269	- 528	N - M	1825	- 352
P - O	2088	- 447	M - L	2088	- 470
O - N	1825	- 344	L - J	2269	- 552

Maximum Web Forces Per Ply (lbs)

Webs	Tens.	Comp.	Webs	Tens.	Comp.
D - O	186	- 411	G - M	508	- 126
E - O	508	- 126	M - H	185	- 411
F - N	194	- 408			

Lumber

Top chord: 2x4 SP #2;
Bot chord: 2x4 SP M-31; B2 2x4 SP #2;
Webs: 2x4 SP #3;
Lt Wedge: 2x4 SP #3;Rt Wedge: 2x4 SP #3;

Bracing

(a) Continuous lateral restraint equally spaced on member.

Wind

Wind loads based on MWFRS with additional C&C member design.

Additional Notes

The overall height of this truss excluding overhang is 9-3-10.

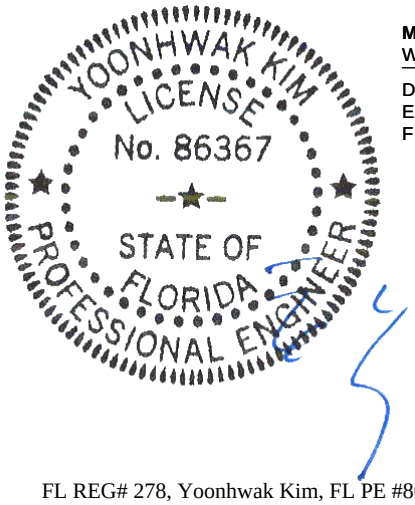

FL REG# 278, Yoonhwak Kim, FL PE #86367
12/23/2020

****WARNING**** READ AND FOLLOW ALL NOTES ON THIS DRAWING!
****IMPORTANT**** FURNISH THIS DRAWING TO ALL CONTRACTORS INCLUDING THE INSTALLERS

Trusses require extreme care in fabricating, handling, shipping, installing and bracing. Refer to and follow the latest edition of BCSI (Building Component Safety Information, by TPI and SBCA) for safety practices prior to performing these functions. Installers shall provide temporary bracing per BCSI. Unless noted otherwise, top chord shall have properly attached structural sheathing and bottom chord shall have a properly attached rigid ceiling. Locations shown for permanent lateral restraint of webs shall have bracing installed per BCSI sections B3, B7, or B10, as applicable. Apply plates to each face of truss and position as shown above and on the Joint Details, unless noted otherwise. Refer to drawings 160A-Z for standard plate positions. Refer to job's General Notes page for additional information.

Alpine, a division of ITW Building Components Group Inc. shall not be responsible for any deviation from this drawing, any failure to build the truss in conformance with ANSI/TPI 1, or for handling, shipping, installation and bracing of trusses. A seal on this drawing or cover page listing this drawing, indicates acceptance of professional engineering responsibility solely for the design shown. The suitability and use of this drawing for any structure is the responsibility of the Building Designer per ANSI/TPI 1 Sec.2.

For more information see these web sites: Alpine: alpineitw.com; TPI: tpinst.org; SBCA: sbcindustry.com; ICC: iccsafe.org; AWC: awc.org

ALPINE AN ITW COMPANY
6750 Forum Drive
Suite 305
Orlando FL, 32821

SEQN: 394506 HIPS FROM: CDM	Ply: 1 Qty: 1	**Job Number:** 20-4682 Reddoch **Truss Label:** A07	Cust: R 215 JRef:1X1f2150003 T1 DrwNo: 358.20.1017.05797 / YK 12/23/2020

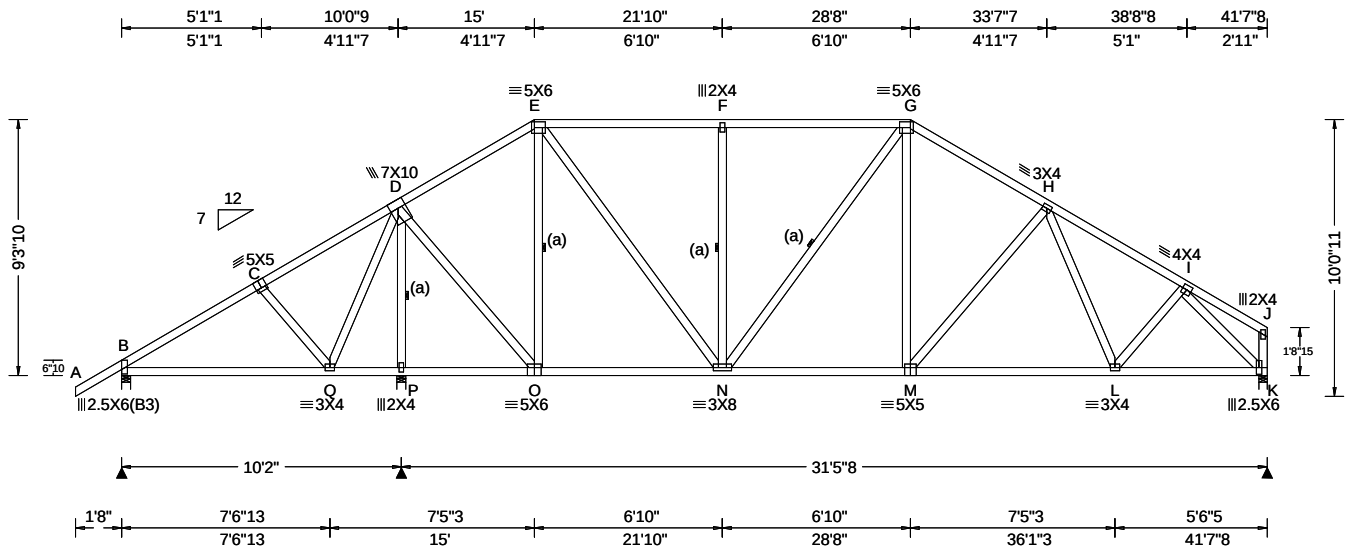

Loading Criteria (psf)

TCLL: 20.00
TCDL: 7.00
BCLL: 0.00
BCDL: 10.00
Des Ld: 37.00
NCBCLL: 10.00
Soffit: 2.00
Load Duration: 1.25
Spacing: 24.0 "

Wind Criteria

Wind Std: ASCE 7-10
Speed: 130 mph
Enclosure: Closed
Risk Category: II
EXP: C Kzt: NA
Mean Height: 15.00 ft
TCDL: 4.2 psf
BCDL: 5.0 psf
MWFRS Parallel Dist: h to 2h
C&C Dist a: 4.17 ft
Loc. from endwall: not in 13.00 ft
GCpi: 0.18
Wind Duration: 1.60

Snow Criteria (Pg,Pf in PSF)

Pg: NA Ct: NA CAT: NA
Pf: NA Ce: NA
Lu: NA Cs: NA
Snow Duration: NA

Building Code:
FBC 2017 RES
TPI Std: 2014
Rep Fac: Yes
FT/RT:20(0)/10(0)
Plate Type(s):
WAVE

Defl/CSI Criteria

PP Deflection in	loc	L/defl	L/#
VERT(LL): 0.052	M	999	240
VERT(CL): 0.097	M	999	180
HORZ(LL): 0.020	K	-	-
HORZ(TL): 0.037	K	-	-

Creep Factor: 2.0
Max TC CSI: 0.628
Max BC CSI: 0.605
Max Web CSI: 0.572

VIEW Ver: 20.01.01A.0724.11

▲Maximum Reactions (lbs)

Loc	Gravity R+	/ R-	/ Rh	Non-Gravity / Rw	/ U	/ RL
B	438	/-	/-	/271	/11	/249
P	1682	/-	/-	/918	/166	/-
K	1185	/-	/-	/695	/67	/-

Wind reactions based on MWFRS
B Brg Width = 4.0 Min Req = 1.5
P Brg Width = 4.0 Min Req = 1.6
K Brg Width = 3.5 Min Req = 1.5
Bearings B, P, & K are a rigid surface.
Members not listed have forces less than 375#

Maximum Top Chord Forces Per Ply (lbs)

Chords	Tens.	Comp.	Chords	Tens.	Comp.
D - E	271	- 672	G - H	452	- 1252
E - F	416	- 983	H - I	443	- 1408
F - G	416	- 983			

Maximum Bot Chord Forces Per Ply (lbs)

Chords	Tens.	Comp.	Chords	Tens.	Comp.
O - N	528	- 37	M - L	1169	- 267
N - M	1021	- 182	L - K	1009	- 278

Maximum Web Forces Per Ply (lbs)

Webs	Tens.	Comp.	Webs	Tens.	Comp.
D - P	491	- 1623	F - N	194	- 413
D - O	997	- 259	G - M	393	- 85
E - O	222	- 650	I - K	407	- 1472
E - N	770	- 239			

Lumber

Top chord: 2x4 SP #2;
Bot chord: 2x4 SP #2;
Webs: 2x4 SP #3;

Bracing

(a) Continuous lateral restraint equally spaced on member.

Wind

Wind loads based on MWFRS with additional C&C member design.

Right end vertical not exposed to wind pressure.

Additional Notes

The overall height of this truss excluding overhang is 9-3-10.

YOONHWAK KIM
LICENSE
No. 86367
STATE OF FLORIDA
PROFESSIONAL ENGINEER

FL REG# 278, Yoonhwak Kim, FL PE #86367
12/23/2020

****WARNING**** READ AND FOLLOW ALL NOTES ON THIS DRAWING!
****IMPORTANT**** FURNISH THIS DRAWING TO ALL CONTRACTORS INCLUDING THE INSTALLERS

Trusses require extreme care in fabricating, handling, shipping, installing and bracing. Refer to and follow the latest edition of BCSI (Building Component Safety Information, by TPI and SBCA) for safety practices prior to performing these functions. Installers shall provide temporary bracing per BCSI. Unless noted otherwise, top chord shall have properly attached structural sheathing and bottom chord shall have a properly attached rigid ceiling. Locations shown for permanent lateral restraint of webs shall have bracing installed per BCSI sections B3, B7, or B10, as applicable. Apply plates to each face of truss and position as shown above and on the Joint Details, unless noted otherwise. Refer to drawings 160A-Z for standard plate positions. Refer to job's General Notes page for additional information.

Alpine, a division of ITW Building Components Group Inc. shall not be responsible for any deviation from this drawing, any failure to build the truss in conformance with ANSI/TPI 1, or for handling, shipping, installation and bracing of trusses. A seal on this drawing or cover page listing this drawing, indicates acceptance of professional engineering responsibility solely for the design shown. The suitability and use of this drawing for any structure is the responsibility of the Building Designer per ANSI/TPI 1 Sec.2.

For more information see these web sites: Alpine: alpineitw.com; TPI: tpinst.org; SBCA: sbcindustry.com; ICC: iccsafe.org; AWC: awc.org

ALPINE AN ITW COMPANY
6750 Forum Drive
Suite 305
Orlando FL, 32821

SEQN: 394507 HIPS FROM: CDM	Ply: 1 Qty: 1	**Job Number:** 20-4682 Reddoch **Truss Label:** A08	Cust: R 215 JRef:1X1f2150003 T31 DrwNo: 358.20.1017.07747 / YK 12/23/2020

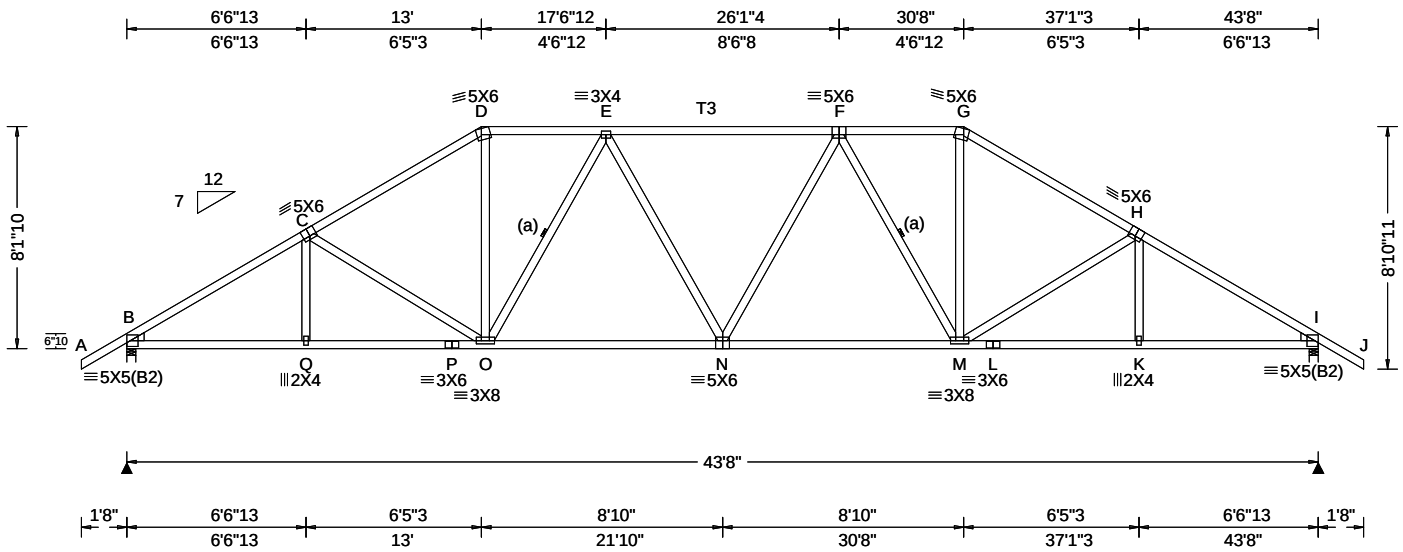

Loading Criteria (psf)

TCLL:	20.00
TCDL:	7.00
BCLL:	0.00
BCDL:	10.00
Des Ld:	37.00
NCBCLL:	10.00
Soffit:	2.00

Load Duration: 1.25
Spacing: 24.0 "

Wind Criteria
Wind Std: ASCE 7-10
Speed: 130 mph
Enclosure: Closed
Risk Category: II
EXP: C Kzt: NA
Mean Height: 15.00 ft
TCDL: 4.2 psf
BCDL: 5.0 psf
MWFRS Parallel Dist: h to 2h
C&C Dist a: 4.37 ft
Loc. from endwall: not in 13.00 ft
GCpi: 0.18
Wind Duration: 1.60

Snow Criteria (Pg,Pf in PSF)
Pg: NA Ct: NA CAT: NA
Pf: NA Ce: NA
Lu: NA Cs: NA
Snow Duration: NA

Building Code:
FBC 2017 RES
TPI Std: 2014
Rep Fac: Yes
FT/RT:20(0)/10(0)
Plate Type(s):
WAVE

Defl/CSI Criteria

PP Deflection in	loc	L/defl	L/#
VERT(LL): 0.191	N	999	240
VERT(CL): 0.359	N	999	180
HORZ(LL): 0.081	K	-	-
HORZ(TL): 0.152	K	-	-

Creep Factor: 2.0
Max TC CSI: 0.804
Max BC CSI: 0.440
Max Web CSI: 0.420

VIEW Ver: 20.01.01A.0724.11

▲Maximum Reactions (lbs)

Loc	Gravity R+	/ R-	/ Rh	Non-Gravity / Rw	/ U	/ RL
B	1765	/-	/-	/991	/142	/260
I	1765	/-	/-	/991	/142	/-

Wind reactions based on MWFRS
B Brg Width = 4.0 Min Req = 1.5
I Brg Width = 4.0 Min Req = 1.5
Bearings B & I are a rigid surface.
Members not listed have forces less than 375#

Maximum Top Chord Forces Per Ply (lbs)

Chords	Tens.	Comp.	Chords	Tens.	Comp.
B - C	758	- 2720	F - G	688	- 1956
C - D	733	- 2339	G - H	734	- 2339
D - E	689	- 1957	H - I	757	- 2721
E - F	767	- 2272			

Maximum Bot Chord Forces Per Ply (lbs)

Chords	Tens.	Comp.	Chords	Tens.	Comp.
B - Q	2253	- 524	N - M	2222	- 500
Q - P	2252	- 525	M - L	2252	- 553
P - O	2252	- 525	L - K	2252	- 553
O - N	2227	- 504	K - I	2253	- 553

Maximum Web Forces Per Ply (lbs)

Webs	Tens.	Comp.	Webs	Tens.	Comp.
D - O	854	- 238	F - M	200	- 543
O - E	203	- 550	M - G	849	- 236

Lumber

Top chord: 2x4 SP #2; T3 2x4 SP M-31;
Bot chord: 2x4 SP M-31;
Webs: 2x4 SP #3;
Lt Wedge: 2x4 SP #3;Rt Wedge: 2x4 SP #3;

Bracing

(a) Continuous lateral restraint equally spaced on member.

Wind

Wind loads based on MWFRS with additional C&C member design.

Additional Notes

The overall height of this truss excluding overhang is 8-1-10.

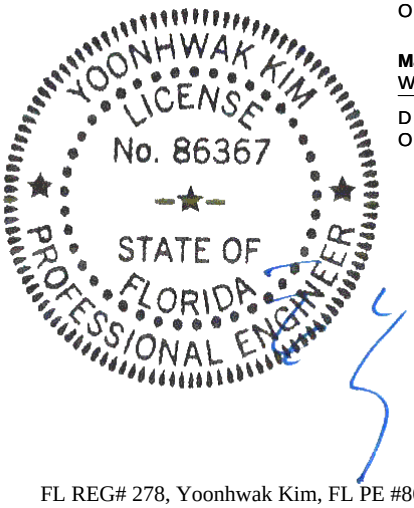

FL REG# 278, Yoonhwak Kim, FL PE #86367
12/23/2020

****WARNING**** READ AND FOLLOW ALL NOTES ON THIS DRAWING!
****IMPORTANT**** FURNISH THIS DRAWING TO ALL CONTRACTORS INCLUDING THE INSTALLERS

Trusses require extreme care in fabricating, handling, shipping, installing and bracing. Refer to and follow the latest edition of BCSI (Building Component Safety Information, by TPI and SBCA) for safety practices prior to performing these functions. Installers shall provide temporary bracing per BCSI. Unless noted otherwise, top chord shall have properly attached structural sheathing and bottom chord shall have a properly attached rigid ceiling. Locations shown for permanent lateral restraint of webs shall have bracing installed per BCSI sections B3, B7, or B10, as applicable. Apply plates to each face of truss and position as shown above and on the Joint Details, unless noted otherwise. Refer to drawings 160A-Z for standard plate positions. Refer to job's General Notes page for additional information.

Alpine, a division of ITW Building Components Group Inc. shall not be responsible for any deviation from this drawing, any failure to build the truss in conformance with ANSI/TPI 1, or for handling, shipping, installation and bracing of trusses. A seal on this drawing or cover page listing this drawing, indicates acceptance of professional engineering responsibility solely for the design shown. The suitability and use of this drawing for any structure is the responsibility of the Building Designer per ANSI/TPI 1 Sec.2.

For more information see these web sites: Alpine: alpineitw.com; TPI: tpinst.org; SBCA: sbcindustry.com; ICC: iccsafe.org; AWC: awc.org

ALPINE AN ITW COMPANY
6750 Forum Drive
Suite 305
Orlando FL, 32821

SEQN: 394508 HIPS FROM: CDM	Ply: 1 Qty: 1	**Job Number:** 20-4682 Reddoch **Truss Label:** A09	Cust: R 215 JRef:1X1f2150003 T4 DrwNo: 358.20.1017.09860 / YK 12/23/2020

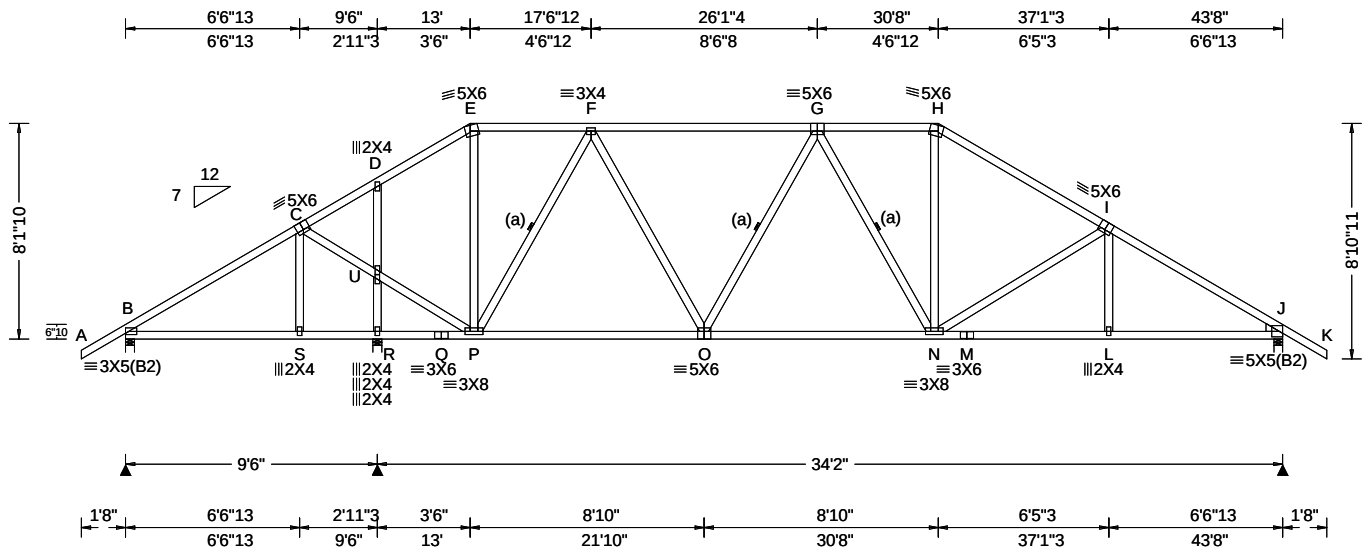

Loading Criteria (psf)

TCLL:	20.00
TCDL:	7.00
BCLL:	0.00
BCDL:	10.00
Des Ld:	37.00
NCBCLL:	10.00
Soffit:	2.00

Load Duration: 1.25
Spacing: 24.0 "

Wind Criteria
Wind Std: ASCE 7-10
Speed: 130 mph
Enclosure: Closed
Risk Category: II
EXP: C Kzt: NA
Mean Height: 15.00 ft
TCDL: 4.2 psf
BCDL: 5.0 psf
MWFRS Parallel Dist: h/2 to h
C&C Dist a: 4.37 ft
Loc. from endwall: not in 13.00 ft
GCpi: 0.18
Wind Duration: 1.60

Snow Criteria (Pg,Pf in PSF)
Pg: NA Ct: NA CAT: NA
Pf: NA Ce: NA
Lu: NA Cs: NA
Snow Duration: NA

Building Code:
FBC 2017 RES
TPI Std: 2014
Rep Fac: Yes
FT/RT:20(0)/10(0)
Plate Type(s):
WAVE

Defl/CSI Criteria

PP Deflection in	loc	L/defl	L/#
VERT(LL): 0.145	G	999	240
VERT(CL): 0.261	G	999	180
HORZ(LL): 0.058	L	-	-
HORZ(TL): 0.110	L	-	-

Creep Factor: 2.0
Max TC CSI: 0.848
Max BC CSI: 0.434
Max Web CSI: 0.795

VIEW Ver: 20.01.01A.0724.11

▲Maximum Reactions (lbs)

Loc	Gravity R+	/ R-	/ Rh	Non-Gravity / Rw	/ U	/ RL
B	1157	/-	/-	/665	/245	/260
R	777	/-	/-	/416	/176	/-
J	1597	/-	/-	/927	/345	/-

Wind reactions based on MWFRS
B Brg Width = 4.0 Min Req = 1.5
R Brg Width = 4.0 Min Req = 1.5
J Brg Width = 4.0 Min Req = 1.5
Bearings B, R, & J are a rigid surface.
Members not listed have forces less than 375#

Maximum Top Chord Forces Per Ply (lbs)

Chords	Tens.	Comp.	Chords	Tens.	Comp.
B - C	396	- 1531	F - G	631	- 1813
C - D	445	- 1448	G - H	604	- 1673
D - E	524	- 1541	H - I	635	- 2015
E - F	470	- 1259	I - J	666	- 2414

Maximum Bot Chord Forces Per Ply (lbs)

Chords	Tens.	Comp.	Chords	Tens.	Comp.
B - S	1225	- 219	O - N	1850	- 390
S - R	1227	- 220	N - M	1990	- 476
R - Q	1227	- 220	M - L	1990	- 476
Q - P	1227	- 220	L - J	1991	- 475
P - O	1665	- 337			

Maximum Web Forces Per Ply (lbs)

Webs	Tens.	Comp.	Webs	Tens.	Comp.
R - U	172	- 449	N - H	692	- 188
E - P	668	- 195	N - I	177	- 394
P - F	288	- 853			

Lumber
Top chord: 2x4 SP #2;
Bot chord: 2x4 SP M-31;
Webs: 2x4 SP #3;
Rt Wedge: 2x4 SP #3;

Bracing
(a) Continuous lateral restraint equally spaced on member.

Wind
Wind loads based on MWFRS with additional C&C member design.

Additional Notes
The overall height of this truss excluding overhang is 8-1-10.

YOONHWAK KIM
LICENSE
No. 86367
STATE OF FLORIDA
PROFESSIONAL ENGINEER

FL REG# 278, Yoonhwak Kim, FL PE #86367
12/23/2020

****WARNING**** READ AND FOLLOW ALL NOTES ON THIS DRAWING!
****IMPORTANT**** FURNISH THIS DRAWING TO ALL CONTRACTORS INCLUDING THE INSTALLERS

Trusses require extreme care in fabricating, handling, shipping, installing and bracing. Refer to and follow the latest edition of BCSI (Building Component Safety Information, by TPI and SBCA) for safety practices prior to performing these functions. Installers shall provide temporary bracing per BCSI. Unless noted otherwise, top chord shall have properly attached structural sheathing and bottom chord shall have a properly attached rigid ceiling. Locations shown for permanent lateral restraint of webs shall have bracing installed per BCSI sections B3, B7, or B10, as applicable. Apply plates to each face of truss and position as shown above and on the Joint Details, unless noted otherwise. Refer to drawings 160A-Z for standard plate positions. Refer to job's General Notes page for additional information.

Alpine, a division of ITW Building Components Group Inc. shall not be responsible for any deviation from this drawing, any failure to build the truss in conformance with ANSI/TPI 1, or for handling, shipping, installation and bracing of trusses. A seal on this drawing or cover page listing this drawing, indicates acceptance of professional engineering responsibility solely for the design shown. The suitability and use of this drawing for any structure is the responsibility of the Building Designer per ANSI/TPI 1 Sec.2.

For more information see these web sites: Alpine: alpineitw.com; TPI: tpinst.org; SBCA: sbcindustry.com; ICC: iccsafe.org; AWC: awc.org

ALPINE
AN ITW COMPANY
6750 Forum Drive
Suite 305
Orlando FL, 32821

SEQN: 394509 HIPS FROM: CDM	Ply: 1 Qty: 1	**Job Number:** 20-4682 Reddoch **Truss Label:** A10	Cust: R 215 JRef:1X1f2150003 T48 DrwNo: 358.20.1017.11523 / YK 12/23/2020

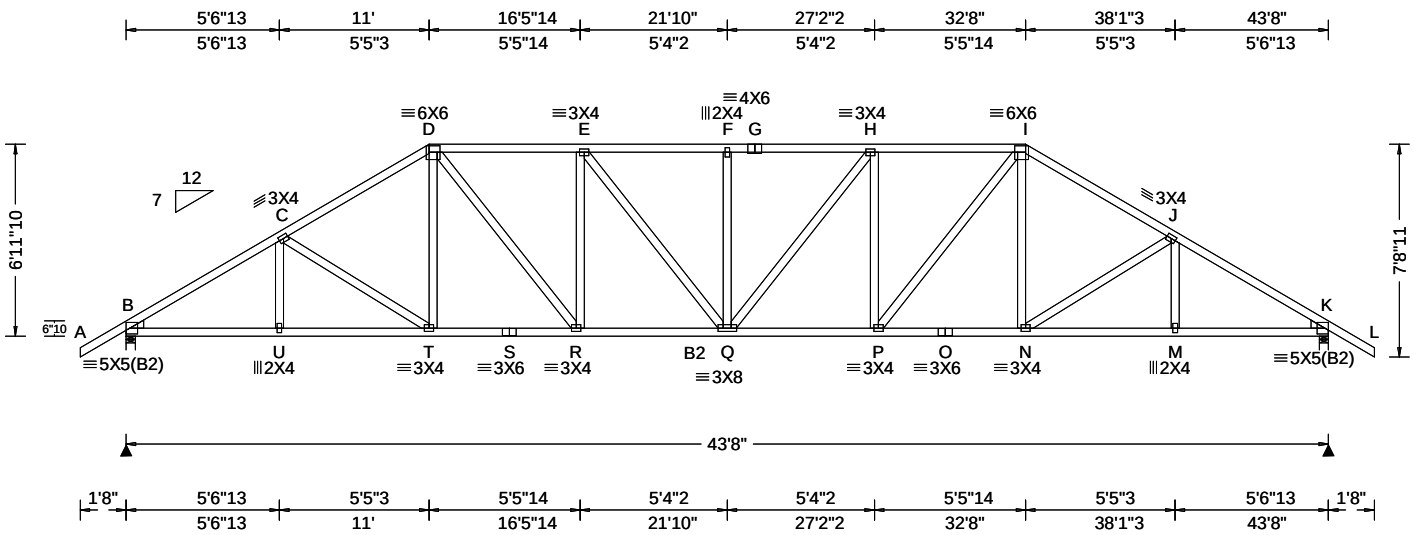

Loading Criteria (psf)

TCLL: 20.00
TCDL: 7.00
BCLL: 0.00
BCDL: 10.00
Des Ld: 37.00
NCBCLL: 10.00
Soffit: 2.00
Load Duration: 1.25
Spacing: 24.0 "

Wind Criteria

Wind Std: ASCE 7-10
Speed: 130 mph
Enclosure: Closed
Risk Category: II
EXP: C Kzt: NA
Mean Height: 15.00 ft
TCDL: 4.2 psf
BCDL: 5.0 psf
MWFRS Parallel Dist: h to 2h
C&C Dist a: 4.37 ft
Loc. from endwall: not in 13.00 ft
GCpi: 0.18
Wind Duration: 1.60

Snow Criteria (Pg,Pf in PSF)

Pg: NA Ct: NA CAT: NA
Pf: NA Ce: NA
Lu: NA Cs: NA
Snow Duration: NA

Building Code:
FBC 2017 RES
TPI Std: 2014
Rep Fac: Yes
FT/RT:20(0)/10(0)
Plate Type(s):
WAVE

Defl/CSI Criteria

PP Deflection in	loc	L/defl	L/#
VERT(LL): 0.238	F	999	240
VERT(CL): 0.447	F	999	180
HORZ(LL): 0.089	M	-	-
HORZ(TL): 0.168	M	-	-

Creep Factor: 2.0
Max TC CSI: 0.782
Max BC CSI: 0.641
Max Web CSI: 0.434

VIEW Ver: 20.01.01A.0724.11

▲Maximum Reactions (lbs)

Loc	Gravity R+	/ R-	/ Rh	Non-Gravity / Rw	/ U	/ RL
B	1765	/-	/-	/978	/154	/228
K	1765	/-	/-	/978	/154	/-

Wind reactions based on MWFRS
B Brg Width = 4.0 Min Req = 1.5
K Brg Width = 4.0 Min Req = 1.5
Bearings B & K are a rigid surface.
Members not listed have forces less than 375#

Maximum Top Chord Forces Per Ply (lbs)

Chords	Tens.	Comp.	Chords	Tens.	Comp.
B - C	772	- 2717	G - H	897	- 2714
C - D	768	- 2451	H - I	848	- 2538
D - E	848	- 2538	I - J	768	- 2451
E - F	897	- 2714	J - K	771	- 2717
F - G	897	- 2714			

Maximum Bot Chord Forces Per Ply (lbs)

Chords	Tens.	Comp.	Chords	Tens.	Comp.
B - U	2253	- 544	Q - P	2559	- 615
U - T	2253	- 545	P - O	2056	- 470
T - S	2056	- 461	O - N	2056	- 470
S - R	2056	- 461	N - M	2253	- 573
R - Q	2559	- 617	M - K	2253	- 572

Maximum Web Forces Per Ply (lbs)

Webs	Tens.	Comp.	Webs	Tens.	Comp.
D - R	769	- 236	H - P	204	- 501
R - E	204	- 501	P - I	769	- 236

Lumber

Top chord: 2x4 SP #2;
Bot chord: 2x4 SP M-31; B2 2x4 SP #2;
Webs: 2x4 SP #3;
Lt Wedge: 2x4 SP #3;Rt Wedge: 2x4 SP #3;

Wind

Wind loads based on MWFRS with additional C&C member design.

Additional Notes

The overall height of this truss excluding overhang is 6-11-10.

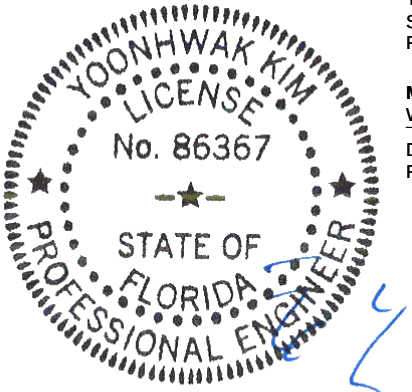

FL REG# 278, Yoonhwak Kim, FL PE #86367
12/23/2020

****WARNING**** READ AND FOLLOW ALL NOTES ON THIS DRAWING!
****IMPORTANT**** FURNISH THIS DRAWING TO ALL CONTRACTORS INCLUDING THE INSTALLERS

Trusses require extreme care in fabricating, handling, shipping, installing and bracing. Refer to and follow the latest edition of BCSI (Building Component Safety Information, by TPI and SBCA) for safety practices prior to performing these functions. Installers shall provide temporary bracing per BCSI. Unless noted otherwise, top chord shall have properly attached structural sheathing and bottom chord shall have a properly attached rigid ceiling. Locations shown for permanent lateral restraint of webs shall have bracing installed per BCSI sections B3, B7, or B10, as applicable. Apply plates to each face of truss and position as shown above and on the Joint Details, unless noted otherwise. Refer to drawings 160A-Z for standard plate positions. Refer to job's General Notes page for additional information.

Alpine, a division of ITW Building Components Group Inc. shall not be responsible for any deviation from this drawing, any failure to build the truss in conformance with ANSI/TPI 1, or for handling, shipping, installation and bracing of trusses. A seal on this drawing or cover page listing this drawing, indicates acceptance of professional engineering responsibility solely for the design shown. The suitability and use of this drawing for any structure is the responsibility of the Building Designer per ANSI/TPI 1 Sec.2.

For more information see these web sites: Alpine: alpineitw.com; TPI: tpinst.org; SBCA: sbcindustry.com; ICC: iccsafe.org; AWC: awc.org

ALPINE AN ITW COMPANY
6750 Forum Drive
Suite 305
Orlando FL, 32821

SEQN: 394510 HIPS FROM: CDM	Ply: 1 Qty: 1	**Job Number:** 20-4682 Reddoch **Truss Label:** A11	Cust: R 215 JRef:1X1f2150003 T59 DrwNo: 358.20.1017.13190 / YK 12/23/2020

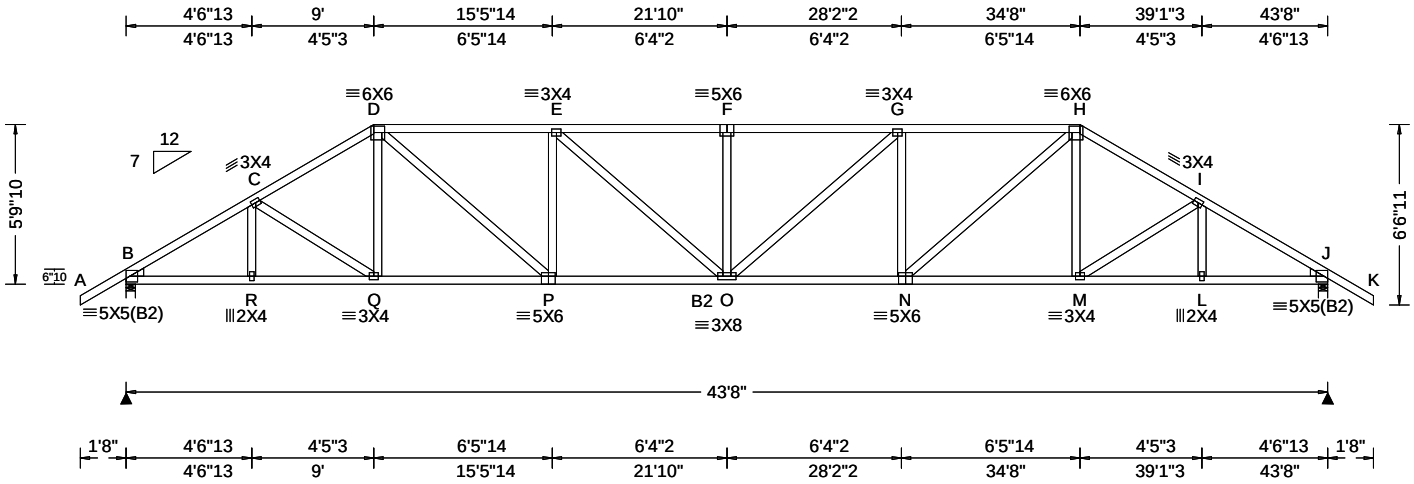

Loading Criteria (psf)

TCLL: 20.00
TCDL: 7.00
BCLL: 0.00
BCDL: 10.00
Des Ld: 37.00
NCBCLL: 10.00
Soffit: 2.00
Load Duration: 1.25
Spacing: 24.0 "

Wind Criteria

Wind Std: ASCE 7-10
Speed: 130 mph
Enclosure: Closed
Risk Category: II
EXP: C Kzt: NA
Mean Height: 15.00 ft
TCDL: 4.2 psf
BCDL: 5.0 psf
MWFRS Parallel Dist: h to 2h
C&C Dist a: 4.37 ft
Loc. from endwall: not in 13.00 ft
GCpi: 0.18
Wind Duration: 1.60

Snow Criteria (Pg,Pf in PSF)

Pg: NA Ct: NA CAT: NA
Pf: NA Ce: NA
Lu: NA Cs: NA
Snow Duration: NA

Building Code:
FBC 2017 RES
TPI Std: 2014
Rep Fac: Yes
FT/RT:20(0)/10(0)
Plate Type(s):
WAVE

Defl/CSI Criteria

PP Deflection in	loc	L/defl	L/#
VERT(LL): 0.296	F	999	240
VERT(CL): 0.555	F	940	180
HORZ(LL): 0.091	L	-	-
HORZ(TL): 0.171	L	-	-

Creep Factor: 2.0
Max TC CSI: 0.762
Max BC CSI: 0.810
Max Web CSI: 0.440

VIEW Ver: 20.01.01A.0724.11

▲ Maximum Reactions (lbs)

	Gravity			Non-Gravity		
Loc	R+	/ R-	/ Rh	/ Rw	/ U	/ RL
B	1765	/-	/-	/963	/165	/195
J	1765	/-	/-	/963	/165	/-

Wind reactions based on MWFRS
B Brg Width = 4.0 Min Req = 1.5
J Brg Width = 4.0 Min Req = 1.5
Bearings B & J are a rigid surface.
Members not listed have forces less than 375#

Maximum Top Chord Forces Per Ply (lbs)

Chords	Tens.	Comp.	Chords	Tens.	Comp.
B - C	780	- 2688	F - G	1056	- 3298
C - D	795	- 2554	G - H	974	- 3005
D - E	974	- 3005	H - I	795	- 2554
E - F	1056	- 3298	I - J	778	- 2688

Maximum Bot Chord Forces Per Ply (lbs)

Chords	Tens.	Comp.	Chords	Tens.	Comp.
B - R	2229	- 557	O - N	3037	- 778
R - Q	2230	- 559	N - M	2168	- 525
Q - P	2168	- 518	M - L	2230	- 586
P - O	3037	- 782	L - J	2229	- 585

Maximum Web Forces Per Ply (lbs)

Webs	Tens.	Comp.	Webs	Tens.	Comp.
D - P	1108	- 333	G - N	242	- 604
P - E	242	- 604	N - H	1108	- 333

Lumber

Top chord: 2x4 SP #2;
Bot chord: 2x4 SP M-31; B2 2x4 SP #2;
Webs: 2x4 SP #3;
Lt Wedge: 2x4 SP #3;Rt Wedge: 2x4 SP #3;

Wind

Wind loads based on MWFRS with additional C&C member design.

Additional Notes

The overall height of this truss excluding overhang is 5-9-10.

YOONHWAK KIM
LICENSE
No. 86367
STATE OF FLORIDA
PROFESSIONAL ENGINEER

FL REG# 278, Yoonhwak Kim, FL PE #86367
12/23/2020

****WARNING**** READ AND FOLLOW ALL NOTES ON THIS DRAWING!
****IMPORTANT**** FURNISH THIS DRAWING TO ALL CONTRACTORS INCLUDING THE INSTALLERS

Trusses require extreme care in fabricating, handling, shipping, installing and bracing. Refer to and follow the latest edition of BCSI (Building Component Safety Information, by TPI and SBCA) for safety practices prior to performing these functions. Installers shall provide temporary bracing per BCSI. Unless noted otherwise, top chord shall have properly attached structural sheathing and bottom chord shall have a properly attached rigid ceiling. Locations shown for permanent lateral restraint of webs shall have bracing installed per BCSI sections B3, B7, or B10, as applicable. Apply plates to each face of truss and position as shown above and on the Joint Details, unless noted otherwise. Refer to drawings 160A-Z for standard plate positions. Refer to job's General Notes page for additional information.

Alpine, a division of ITW Building Components Group Inc. shall not be responsible for any deviation from this drawing, any failure to build the truss in conformance with ANSI/TPI 1, or for handling, shipping, installation and bracing of trusses. A seal on this drawing or cover page listing this drawing, indicates acceptance of professional engineering responsibility solely for the design shown. The suitability and use of this drawing for any structure is the responsibility of the Building Designer per ANSI/TPI 1 Sec.2.

For more information see these web sites: Alpine: alpineitw.com; TPI: tpinst.org; SBCA: sbcindustry.com; ICC: iccsafe.org; AWC: awc.org

ALPINE AN ITW COMPANY
6750 Forum Drive
Suite 305
Orlando FL, 32821

SEQN: 394540 SPEC FROM: CDM	Ply: 2 Qty: 1	**Job Number:** 20-4682 Reddoch **Truss Label:** A12	Cust: R 215 JRef:1X1f2150003 T9 DrwNo: 358.20.1017.22950 / YK 12/23/2020

2 Complete Trusses Required

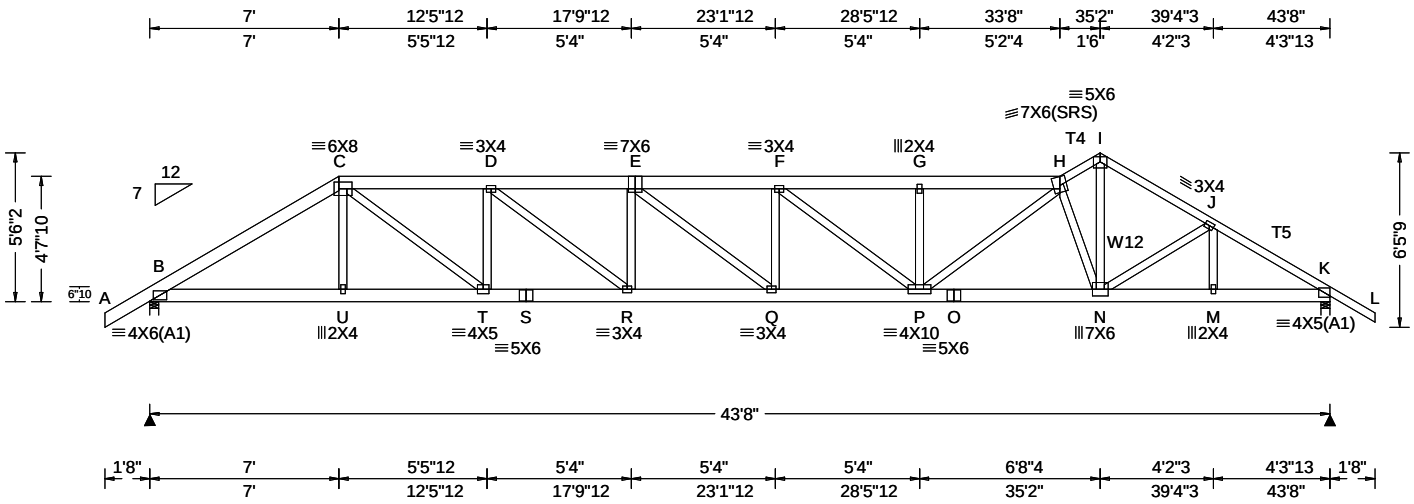

Loading Criteria (psf)

TCLL: 20.00
TCDL: 7.00
BCLL: 0.00
BCDL: 10.00
Des Ld: 37.00
NCBCLL: 0.00
Soffit: 2.00
Load Duration: 1.25
Spacing: 24.0 "

Wind Criteria

Wind Std: ASCE 7-10
Speed: 130 mph
Enclosure: Closed
Risk Category: II
EXP: C Kzt: NA
Mean Height: 15.00 ft
TCDL: 4.2 psf
BCDL: 5.0 psf
MWFRS Parallel Dist: 0 to h/2
C&C Dist a: 4.37 ft
Loc. from endwall: not in 13.00 ft
GCpi: 0.18
Wind Duration: 1.60

Snow Criteria (Pg,Pf in PSF)

Pg: NA Ct: NA CAT: NA
Pf: NA Ce: NA
Lu: NA Cs: NA
Snow Duration: NA

Building Code:
FBC 2017 RES
TPI Std: 2014
Rep Fac: No
FT/RT:20(0)/10(0)
Plate Type(s):
WAVE

Defl/CSI Criteria

PP Deflection in	loc	L/defl	L/#
VERT(LL): 0.249	Q	999	240
VERT(CL): 0.463	Q	999	180
HORZ(LL): 0.057	C	-	-
HORZ(TL): 0.107	C	-	-

Creep Factor: 2.0
Max TC CSI: 0.351
Max BC CSI: 0.322
Max Web CSI: 0.749

VIEW Ver: 20.01.01A.0724.11

▲Maximum Reactions (lbs)

Loc	Gravity R+	/ R-	/ Rh	Non-Gravity / Rw	/ U	/ RL
B	3692	/-	/-	/-	/956	/-
K	2819	/-	/-	/-	/690	/-

Wind reactions based on MWFRS
B Brg Width = 4.0 Min Req = 1.5
K Brg Width = 4.0 Min Req = 1.5
Bearings B & K are a rigid surface.
Members not listed have forces less than 375#

Maximum Top Chord Forces Per Ply (lbs)

Chords	Tens.	Comp.	Chords	Tens.	Comp.
B - C	836	-3221	G - H	940	-3848
C - D	1027	-4011	H - I	540	-2250
D - E	1174	-4626	I - J	554	-2285
E - F	1150	-4599	J - K	539	-2242
F - G	940	-3848			

Maximum Bot Chord Forces Per Ply (lbs)

Chords	Tens.	Comp.	Chords	Tens.	Comp.
B - U	2731	-701	Q - P	4578	-1149
U - T	2742	-701	P - O	2698	-654
T - S	4065	-1045	O - N	2698	-654
S - R	4065	-1045	N - M	1899	-452
R - Q	4645	-1183	M - K	1896	-450

Maximum Web Forces Per Ply (lbs)

Webs	Tens.	Comp.	Webs	Tens.	Comp.
C - T	1609	-413	P - H	1480	-368
T - D	266	-777	H - N	555	-2202
D - R	729	-167	I - N	2131	-491
F - P	268	-938			

Lumber

Top chord: 2x6 SP 2400f-2.0E; T4,T5 2x4 SP #2;
Bot chord: 2x6 SP 2400f-2.0E;
Webs: 2x4 SP #3; W12 2x4 SP #2;

Additional Notes

The overall height of this truss excluding overhang is 5-6-2.

Nailnote

Nail Schedule:0.131"x3", min. nails
Top Chord: 1 Row @12.00" o.c.
Bot Chord: 1 Row @12.00" o.c.
Webs : 1 Row @ 4" o.c.
Use equal spacing between rows and stagger nails in each row to avoid splitting.

Special Loads

------(Lumber Dur.Fac.=1.25 / Plate Dur.Fac.=1.25)

TC: From	56 plf at	-1.67 to	56 plf at	7.00
TC: From	28 plf at	7.00 to	28 plf at	26.54
TC: From	56 plf at	26.54 to	56 plf at	45.33
BC: From	5 plf at	-1.67 to	5 plf at	0.00
BC: From	20 plf at	0.00 to	20 plf at	7.03
BC: From	10 plf at	7.03 to	10 plf at	26.54
BC: From	20 plf at	26.54 to	20 plf at	43.67
BC: From	5 plf at	43.67 to	5 plf at	45.33

TC: 258 lb Conc. Load at 7.03
TC: 175 lb Conc. Load at 9.06,11.06,13.06,15.06 17.06,19.06,21.06,22.60,24.60
BC: 451 lb Conc. Load at 7.03
BC: 131 lb Conc. Load at 9.06,11.06,13.06,15.06 17.06,19.06,21.06,22.60,24.60
BC: 261 lb Conc. Load at 26.54

Wind

Wind loads and reactions based on MWFRS.

YOONHWAK KIM LICENSE No. 86367 STATE OF FLORIDA PROFESSIONAL ENGINEER

FL REG# 278, Yoonhwak Kim, FL PE #86367
12/23/2020

****WARNING**** READ AND FOLLOW ALL NOTES ON THIS DRAWING!
****IMPORTANT**** FURNISH THIS DRAWING TO ALL CONTRACTORS INCLUDING THE INSTALLERS

Trusses require extreme care in fabricating, handling, shipping, installing and bracing. Refer to and follow the latest edition of BCSI (Building Component Safety Information, by TPI and SBCA) for safety practices prior to performing these functions. Installers shall provide temporary bracing per BCSI. Unless noted otherwise, top chord shall have properly attached structural sheathing and bottom chord shall have a properly attached rigid ceiling. Locations shown for permanent lateral restraint of webs shall have bracing installed per BCSI sections B3, B7, or B10, as applicable. Apply plates to each face of truss and position as shown above and on the Joint Details, unless noted otherwise. Refer to drawings 160A-Z for standard plate positions. Refer to job's General Notes page for additional information.

Alpine, a division of ITW Building Components Group Inc. shall not be responsible for any deviation from this drawing, any failure to build the truss in conformance with ANSI/TPI 1, or for handling, shipping, installation and bracing of trusses. A seal on this drawing or cover page listing this drawing, indicates acceptance of professional engineering responsibility solely for the design shown. The suitability and use of this drawing for any structure is the responsibility of the Building Designer per ANSI/TPI 1 Sec.2.

For more information see these web sites: Alpine: alpineitw.com; TPI: tpinst.org; SBCA: sbcindustry.com; ICC: iccsafe.org; AWC: awc.org

ALPINE AN ITW COMPANY
6750 Forum Drive
Suite 305
Orlando FL, 32821

SEQN: 394511 HIPS FROM: CDM	Ply: 1 Qty: 1	**Job Number:** 20-4682 Reddoch **Truss Label:** A13	Cust: R 215 JRef:1X1f2150003 T29 DrwNo: 358.20.1017.26550 / YK 12/23/2020

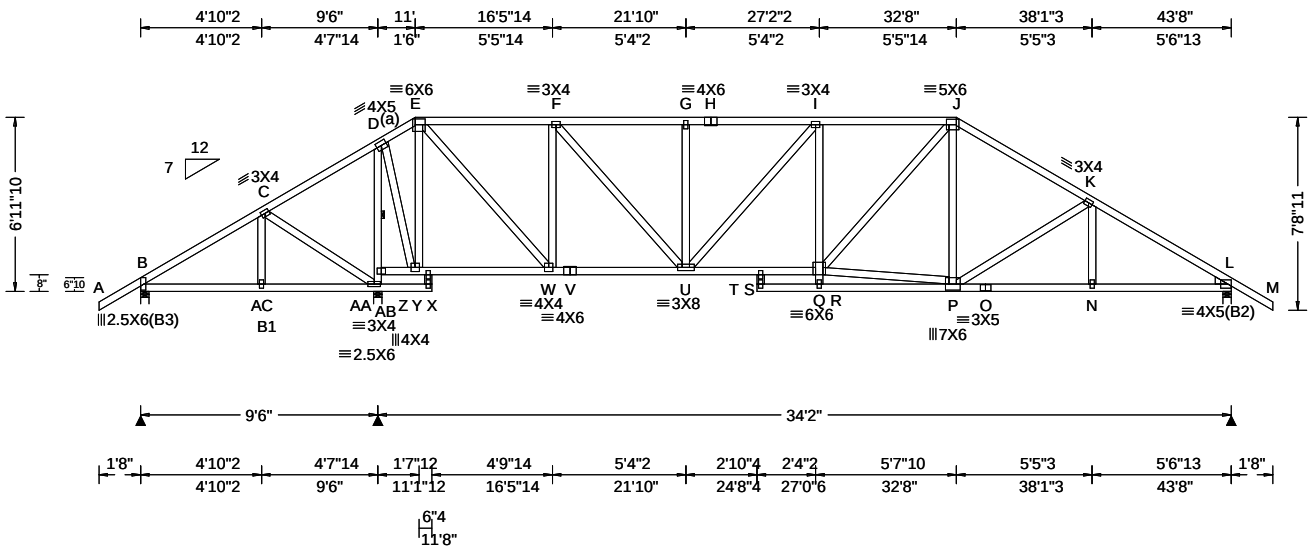

Loading Criteria (psf)

TCLL: 20.00
TCDL: 7.00
BCLL: 0.00
BCDL: 10.00
Des Ld: 37.00
NCBCLL: 10.00
Soffit: 2.00
Load Duration: 1.25
Spacing: 24.0 "

Wind Criteria

Wind Std: ASCE 7-10
Speed: 130 mph
Enclosure: Closed
Risk Category: II
EXP: C Kzt: NA
Mean Height: 15.00 ft
TCDL: 4.2 psf
BCDL: 5.0 psf
MWFRS Parallel Dist: h/2 to h
C&C Dist a: 4.37 ft
Loc. from endwall: not in 6.50 ft
GCpi: 0.18
Wind Duration: 1.60

Snow Criteria (Pg,Pf in PSF)

Pg: NA Ct: NA CAT: NA
Pf: NA Ce: NA
Lu: NA Cs: NA
Snow Duration: NA

Building Code:
FBC 2017 RES
TPI Std: 2014
Rep Fac: Yes
FT/RT:20(0)/10(0)
Plate Type(s):
WAVE

Defl/CSI Criteria

PP Deflection in	loc	L/defl	L/#
VERT(LL): 0.123	I	999	240
VERT(CL): 0.231	I	999	180
HORZ(LL): 0.033	N	-	-
HORZ(TL): 0.065	N	-	-

Creep Factor: 2.0
Max TC CSI: 0.635
Max BC CSI: 0.782
Max Web CSI: 0.826

VIEW Ver: 20.01.01A.0724.11

▲ Maximum Reactions (lbs)

	Gravity			Non-Gravity		
Loc	R+	/ R-	/ Rh	/ Rw	/ U	/ RL
B	360	/-	/-	/155	/108	/228
AB	1893	/-	/-	/1047	/353	/-
L	1366	/-	/-	/817	/310	/-

Wind reactions based on MWFRS
B Brg Width = 4.0 Min Req = 1.5
AB Brg Width = 4.0 Min Req = 1.5
L Brg Width = 4.0 Min Req = 1.6
Bearings B, AB, & L are a rigid surface.
Members not listed have forces less than 375#

Maximum Top Chord Forces Per Ply (lbs)

Chords	Tens.	Comp.	Chords	Tens.	Comp.
C - D	399	- 92	H - I	603	- 1561
E - F	458	- 1013	I - J	649	- 1766
F - G	603	- 1561	J - K	577	- 1688
G - H	603	- 1561	K - L	588	- 2001

Maximum Bot Chord Forces Per Ply (lbs)

Chords	Tens.	Comp.	Chords	Tens.	Comp.
W - V	1057	- 229	P - O	1641	- 417
V - U	1057	- 229	O - N	1641	- 417
U - S	1772	- 408	N - L	1642	- 416
S - Q	1722	- 393			

Maximum Web Forces Per Ply (lbs)

Webs	Tens.	Comp.	Webs	Tens.	Comp.
AB-AA	410	- 1575	W - F	311	- 916
AA- D	395	- 1565	F - U	781	- 200
D - Z	1229	- 268	U - I	76	- 458
E - Z	288	- 1171	Q - P	1321	- 281
E - W	1386	- 393	Q - J	537	- 167

Lumber

Top chord: 2x4 SP #2;
Bot chord: 2x4 SP #2; B1 2x4 SP M-31;
Webs: 2x4 SP #3;
Rt Wedge: 2x4 SP #3;

Bracing

(a) Continuous lateral restraint equally spaced on member.

Plating Notes

All plates are 2X4 except as noted.

Wind

Wind loads based on MWFRS with additional C&C member design.

Additional Notes

The overall height of this truss excluding overhang is 6-11-10.

Laterally brace top chord below filler and bottom chord above filler at 24" o.c., including a lateral brace at chord ends (If no rigid diaphragm exists at that point).

YOONHWAK KIM
LICENSE
No. 86367
STATE OF
FLORIDA
PROFESSIONAL ENGINEER

FL REG# 278, Yoonhwak Kim, FL PE #86367
12/23/2020

****WARNING**** READ AND FOLLOW ALL NOTES ON THIS DRAWING!
****IMPORTANT**** FURNISH THIS DRAWING TO ALL CONTRACTORS INCLUDING THE INSTALLERS

Trusses require extreme care in fabricating, handling, shipping, installing and bracing. Refer to and follow the latest edition of BCSI (Building Component Safety Information, by TPI and SBCA) for safety practices prior to performing these functions. Installers shall provide temporary bracing per BCSI. Unless noted otherwise, top chord shall have properly attached structural sheathing and bottom chord shall have a properly attached rigid ceiling. Locations shown for permanent lateral restraint of webs shall have bracing installed per BCSI sections B3, B7, or B10, as applicable. Apply plates to each face of truss and position as shown above and on the Joint Details, unless noted otherwise. Refer to drawings 160A-Z for standard plate positions. Refer to job's General Notes page for additional information.

Alpine, a division of ITW Building Components Group Inc. shall not be responsible for any deviation from this drawing, any failure to build the truss in conformance with ANSI/TPI 1, or for handling, shipping, installation and bracing of trusses. A seal on this drawing or cover page listing this drawing, indicates acceptance of professional engineering responsibility solely for the design shown. The suitability and use of this drawing for any structure is the responsibility of the Building Designer per ANSI/TPI 1 Sec.2.

For more information see these web sites: Alpine: alpineitw.com; TPI: tpinst.org; SBCA: sbcindustry.com; ICC: iccsafe.org; AWC: awc.org

ALPINE AN ITW COMPANY
6750 Forum Drive
Suite 305
Orlando FL, 32821

SEQN: 394512 HIPS FROM: CDM	Ply: 1 Qty: 1	**Job Number:** 20-4682 Reddoch **Truss Label:** A14	Cust: R 215 JRef:1X1f2150003 T28 DrwNo: 358.20.1017.30560 / YK 12/23/2020

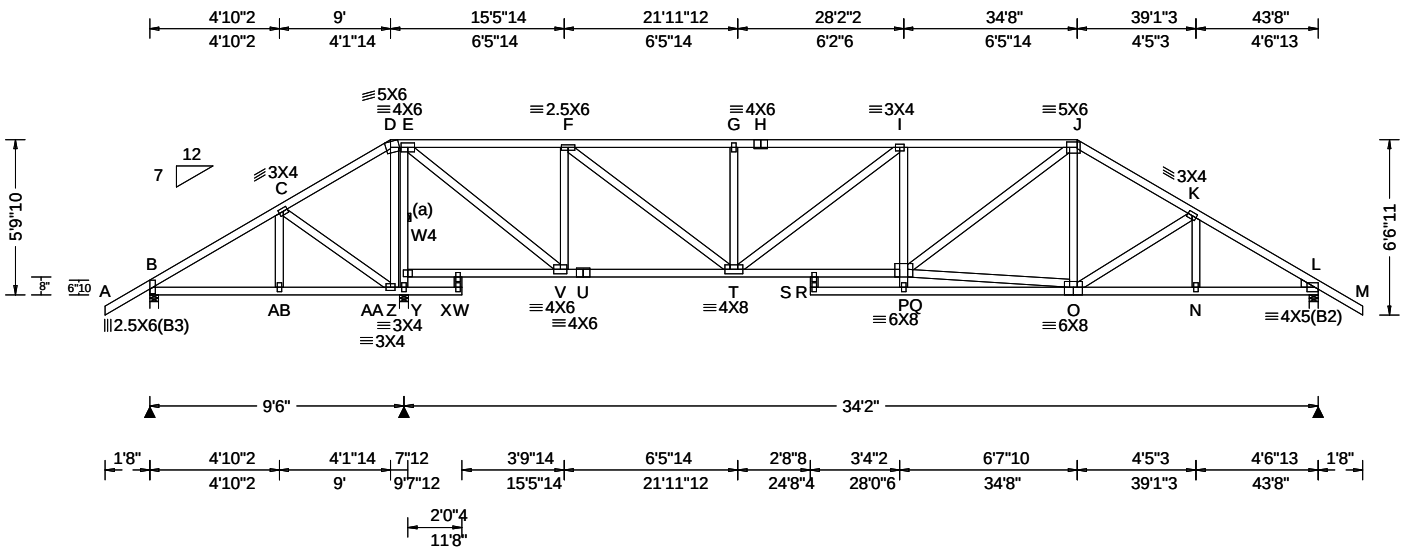

Loading Criteria (psf)

TCLL: 20.00
TCDL: 7.00
BCLL: 0.00
BCDL: 10.00
Des Ld: 37.00
NCBCLL: 10.00
Soffit: 2.00
Load Duration: 1.25
Spacing: 24.0 "

Wind Criteria

Wind Std: ASCE 7-10
Speed: 130 mph
Enclosure: Closed
Risk Category: II
EXP: C Kzt: NA
Mean Height: 15.00 ft
TCDL: 4.2 psf
BCDL: 5.0 psf
MWFRS Parallel Dist: h/2 to h
C&C Dist a: 4.37 ft
Loc. from endwall: not in 6.50 ft
GCpi: 0.18
Wind Duration: 1.60

Snow Criteria (Pg,Pf in PSF)

Pg: NA Ct: NA CAT: NA
Pf: NA Ce: NA
Lu: NA Cs: NA
Snow Duration: NA

Building Code:
FBC 2017 RES
TPI Std: 2014
Rep Fac: Yes
FT/RT:20(0)/10(0)
Plate Type(s):
WAVE

Defl/CSI Criteria

PP Deflection in	loc	L/defl	L/#
VERT(LL): 0.147	I	999	240
VERT(CL): 0.277	I	999	180
HORZ(LL): -0.030	V	-	-
HORZ(TL): 0.060	V	-	-

Creep Factor: 2.0
Max TC CSI: 0.604
Max BC CSI: 0.769
Max Web CSI: 0.658

VIEW Ver: 20.01.01A.0724.11

▲ Maximum Reactions (lbs)

	Gravity			Non-Gravity		
Loc	R+	/ R-	/ Rh	/ Rw	/ U	/ RL
B	341	/-57	/-	/150	/87	/195
Z	1994	/-	/-	/1037	/385	/-
L	1334	/-	/-	/781	/305	/-

Wind reactions based on MWFRS
B Brg Width = 4.0 Min Req = 1.5
Z Brg Width = 4.0 Min Req = 2.0
L Brg Width = 4.0 Min Req = 1.6
Bearings B, Z, & L are a rigid surface.
Members not listed have forces less than 375#

Maximum Top Chord Forces Per Ply (lbs)

Chords	Tens.	Comp.	Chords	Tens.	Comp.
C - D	531	- 37	H - I	672	- 1811
D - E	431	- 4	I - J	740	- 2101
E - F	424	- 899	J - K	587	- 1740
F - G	672	- 1811	K - L	576	- 1934
G - H	672	- 1811			

Maximum Bot Chord Forces Per Ply (lbs)

Chords	Tens.	Comp.	Chords	Tens.	Comp.
AA- Z	169	- 427	T - R	2115	- 525
X - V	172	- 425	R - P	2047	- 505
V - U	960	- 221	O - N	1586	- 414
U - T	960	- 221	N - L	1586	- 413

Maximum Web Forces Per Ply (lbs)

Webs	Tens.	Comp.	Webs	Tens.	Comp.
C -AA	152	- 388	F - T	1091	- 291
Y - Z	496	- 1533	T - I	94	- 543
Y - E	499	- 1538	P - O	1343	- 304
E - V	1728	- 489	P - J	785	- 244
V - F	345	- 1014			

Lumber

Top chord: 2x4 SP #2;
Bot chord: 2x4 SP #2;
Webs: 2x4 SP #3; W4 2x4 SP #2;
Rt Wedge: 2x4 SP #3;

Bracing

(a) Continuous lateral restraint equally spaced on member.

Plating Notes

All plates are 2X4 except as noted.

Wind

Wind loads based on MWFRS with additional C&C member design.

Additional Notes

The overall height of this truss excluding overhang is 5-9-10.

Laterally brace top chord below filler and bottom chord above filler at 24" o.c., including a lateral brace at chord ends (If no rigid diaphragm exists at that point).

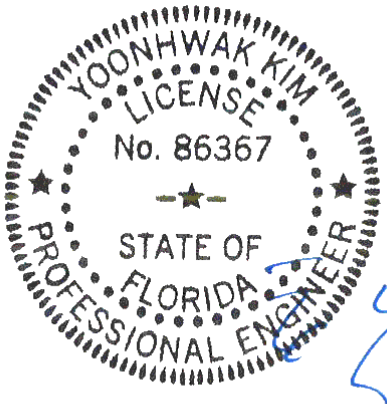

FL REG# 278, Yoonhwak Kim, FL PE #86367
12/23/2020

****WARNING**** READ AND FOLLOW ALL NOTES ON THIS DRAWING!
****IMPORTANT**** FURNISH THIS DRAWING TO ALL CONTRACTORS INCLUDING THE INSTALLERS

Trusses require extreme care in fabricating, handling, shipping, installing and bracing. Refer to and follow the latest edition of BCSI (Building Component Safety Information, by TPI and SBCA) for safety practices prior to performing these functions. Installers shall provide temporary bracing per BCSI. Unless noted otherwise, top chord shall have properly attached structural sheathing and bottom chord shall have a properly attached rigid ceiling. Locations shown for permanent lateral restraint of webs shall have bracing installed per BCSI sections B3, B7, or B10, as applicable. Apply plates to each face of truss and position as shown above and on the Joint Details, unless noted otherwise. Refer to drawings 160A-Z for standard plate positions. Refer to job's General Notes page for additional information.

Alpine, a division of ITW Building Components Group Inc. shall not be responsible for any deviation from this drawing, any failure to build the truss in conformance with ANSI/TPI 1, or for handling, shipping, installation and bracing of trusses. A seal on this drawing or cover page listing this drawing, indicates acceptance of professional engineering responsibility solely for the design shown. The suitability and use of this drawing for any structure is the responsibility of the Building Designer per ANSI/TPI 1 Sec.2.

For more information see these web sites: Alpine: alpineitw.com; TPI: tpinst.org; SBCA: sbcindustry.com; ICC: iccsafe.org; AWC: awc.org

ALPINE AN ITW COMPANY
6750 Forum Drive
Suite 305
Orlando FL, 32821

SEQN: 394541 HIPS FROM: CDM	Ply: 2 Qty: 1	**Job Number:** 20-4682 Reddoch **Truss Label:** A15	Cust: R 215 JRef:1X1f2150003 T20 DrwNo: 358.20.1017.36613 / YK 12/23/2020

2 Complete Trusses Required

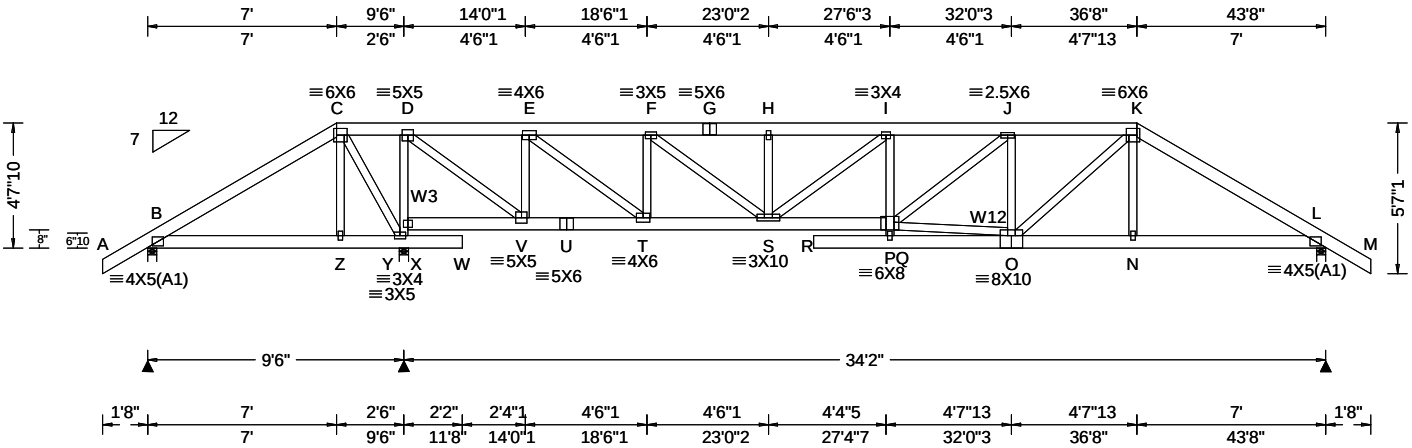

Loading Criteria (psf)

TCLL: 20.00
TCDL: 7.00
BCLL: 0.00
BCDL: 10.00
Des Ld: 37.00
NCBCLL: 0.00
Soffit: 2.00
Load Duration: 1.25
Spacing: 24.0 "

Wind Criteria

Wind Std: ASCE 7-10
Speed: 130 mph
Enclosure: Closed
Risk Category: II
EXP: C Kzt: NA
Mean Height: 15.00 ft
TCDL: 4.2 psf
BCDL: 5.0 psf
MWFRS Parallel Dist: 0 to h/2
C&C Dist a: 4.37 ft
Loc. from endwall: not in 6.50 ft
GCpi: 0.18
Wind Duration: 1.60

Snow Criteria (Pg,Pf in PSF)

Pg: NA Ct: NA CAT: NA
Pf: NA Ce: NA
Lu: NA Cs: NA
Snow Duration: NA

Building Code:
FBC 2017 RES
TPI Std: 2014
Rep Fac: No
FT/RT:20(0)/10(0)
Plate Type(s):
WAVE

Defl/CSI Criteria

PP Deflection in	loc	L/defl	L/#
VERT(LL): 0.192	R	999	240
VERT(CL): 0.356	R	999	180
HORZ(LL): -0.025	K	-	-
HORZ(TL): 0.048	K	-	-

Creep Factor: 2.0
Max TC CSI: 0.190
Max BC CSI: 0.222
Max Web CSI: 0.832

VIEW Ver: 20.01.01A.0724.11

▲Maximum Reactions (lbs)

Loc	Gravity R+	Gravity / R-	Gravity / Rh	Non-Gravity / Rw	Non-Gravity / U	Non-Gravity / RL
B	-	/-341	/-	/18	/-	/-
Y	5201	/-	/-	/-	/1387	/-
L	2933	/-	/-	/-	/784	/-

Wind reactions based on MWFRS
B Brg Width = 4.0 Min Req = 1.5
Y Brg Width = 4.0 Min Req = 1.8
L Brg Width = 4.0 Min Req = 1.5
Bearings B, Y, & L are a rigid surface.
Members not listed have forces less than 375#

Maximum Top Chord Forces Per Ply (lbs)

Chords	Tens.	Comp.	Chords	Tens.	Comp.
B - C	498	- 141	G - H	899	- 3332
C - D	735	- 201	H - I	899	- 3332
D - E	275	- 1003	I - J	982	- 3718
E - F	657	- 2436	J - K	756	- 2820
F - G	899	- 3332	K - L	671	- 2495

Maximum Bot Chord Forces Per Ply (lbs)

Chords	Tens.	Comp.	Chords	Tens.	Comp.
B - Z	105	- 416	T - S	2513	- 682
Z - Y	104	- 407	S - P	3737	- 990
X - V	181	- 676	O - N	2117	- 558
V - U	1111	- 308	N - L	2107	- 558
U - T	1111	- 308			

Maximum Web Forces Per Ply (lbs)

Webs	Tens.	Comp.	Webs	Tens.	Comp.
C - Y	195	- 733	F - S	1052	- 278
Y - X	553	- 1857	S - I	116	- 520
X - D	530	- 1766	P - J	1102	- 274
D - V	2183	- 593	P - O	2681	- 722
V - E	402	- 1305	J - O	302	- 945
E - T	1725	- 455	O - K	942	- 265
T - F	300	- 923			

Lumber

Top chord: 2x6 SP 2400f-2.0E;
Bot chord: 2x6 SP 2400f-2.0E;
Webs: 2x4 SP #3; W3 2x4 SP M-31; W12 2x4 SP #2;

Nailnote

Nail Schedule:0.131"x3", min. nails
Top Chord: 1 Row @12.00" o.c.
Bot Chord: 1 Row @12.00" o.c.
Webs : 1 Row @ 4" o.c.
Use equal spacing between rows and stagger nails in each row to avoid splitting.

Special Loads

------(Lumber Dur.Fac.=1.25 / Plate Dur.Fac.=1.25)

TC: From	56 plf at	-1.67 to	56 plf at	7.00
TC: From	28 plf at	7.00 to	28 plf at	36.67
TC: From	56 plf at	36.67 to	56 plf at	45.33
BC: From	5 plf at	-1.67 to	5 plf at	0.00
BC: From	20 plf at	0.00 to	20 plf at	7.03
BC: From	10 plf at	7.03 to	10 plf at	36.64
BC: From	20 plf at	36.64 to	20 plf at	43.67
BC: From	5 plf at	43.67 to	5 plf at	45.33

TC: 258 lb Conc. Load at 7.03,36.64
TC: 175 lb Conc. Load at 9.06,11.06,25.06,26.60 28.60,30.60,32.60,34.60
TC: 171 lb Conc. Load at 13.06,15.06,17.06,19.06 21.06,23.06
BC: 451 lb Conc. Load at 7.03,36.64
BC: 131 lb Conc. Load at 9.06,11.06,25.06,26.60 28.60,30.60,32.60,34.60
BC: 126 lb Conc. Load at 13.06,15.06,17.06,19.06 21.06,23.06

Plating Notes

All plates are 2X4 except as noted.

Wind

Wind loads and reactions based on MWFRS.

Additional Notes

Negative reaction(s) of -341# MAX. from a non-wind load case requires uplift connection. See Maximum Reactions.

The overall height of this truss excluding overhang is 4-7-10.

Laterally brace top chord below filler and bottom chord above filler at 24" o.c., including a lateral brace at chord ends (If no rigid diaphragm exists at that point).

YOONHWAK KIM
No. 86367
STATE OF FLORIDA
PROFESSIONAL ENGINEER

FL REG# 278, Yoonhwak Kim, FL PE #86367
12/23/2020

****WARNING**** READ AND FOLLOW ALL NOTES ON THIS DRAWING!
****IMPORTANT**** FURNISH THIS DRAWING TO ALL CONTRACTORS INCLUDING THE INSTALLERS

Trusses require extreme care in fabricating, handling, shipping, installing and bracing. Refer to and follow the latest edition of BCSI (Building Component Safety Information, by TPI and SBCA) for safety practices prior to performing these functions. Installers shall provide temporary bracing per BCSI. Unless noted otherwise, top chord shall have properly attached structural sheathing and bottom chord shall have a properly attached rigid ceiling. Locations shown for permanent lateral restraint of webs shall have bracing installed per BCSI sections B3, B7, or B10, as applicable. Apply plates to each face of truss and position as shown above and on the Joint Details, unless noted otherwise. Refer to drawings 160A-Z for standard plate positions. Refer to job's General Notes page for additional information.

Alpine, a division of ITW Building Components Group Inc. shall not be responsible for any deviation from this drawing, any failure to build the truss in conformance with ANSI/TPI 1, or for handling, shipping, installation and bracing of trusses. A seal on this drawing or cover page listing this drawing, indicates acceptance of professional engineering responsibility solely for the design shown. The suitability and use of this drawing for any structure is the responsibility of the Building Designer per ANSI/TPI 1 Sec.2.

For more information see these web sites: Alpine: alpineitw.com; TPI: tpinst.org; SBCA: sbcindustry.com; ICC: iccsafe.org; AWC: awc.org

ALPINE AN ITW COMPANY
6750 Forum Drive
Suite 305
Orlando FL, 32821

SEQN: 394513 COMN FROM: CDM	Ply: 1 Qty: 4	**Job Number:** 20-4682 Reddoch **Truss Label:** B01	Cust: R 215 JRef:1X1f2150003 T38 DrwNo: 358.20.1017.38540 / YK 12/23/2020

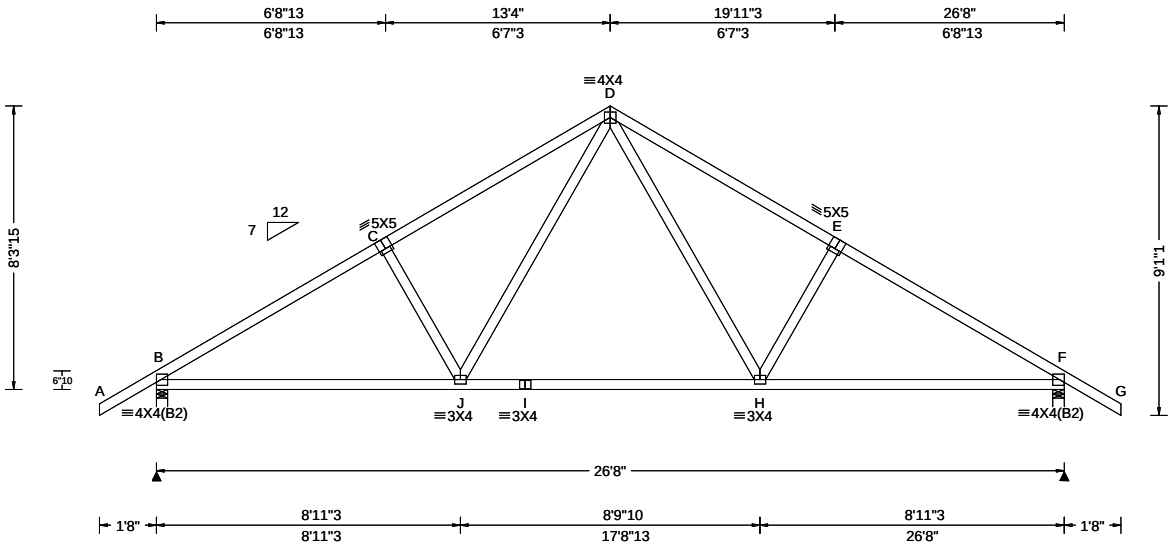

Loading Criteria (psf)

TCLL: 20.00
TCDL: 7.00
BCLL: 0.00
BCDL: 10.00
Des Ld: 37.00
NCBCLL: 10.00
Soffit: 2.00
Load Duration: 1.25
Spacing: 24.0 "

Wind Criteria

Wind Std: ASCE 7-10
Speed: 130 mph
Enclosure: Closed
Risk Category: II
EXP: C Kzt: NA
Mean Height: 15.00 ft
TCDL: 4.2 psf
BCDL: 5.0 psf
MWFRS Parallel Dist: 0 to h/2
C&C Dist a: 3.00 ft
Loc. from endwall: Any
GCpi: 0.18
Wind Duration: 1.60

Snow Criteria (Pg,Pf in PSF)

Pg: NA Ct: NA CAT: NA
Pf: NA Ce: NA
Lu: NA Cs: NA
Snow Duration: NA

Building Code:
FBC 2017 RES
TPI Std: 2014
Rep Fac: Yes
FT/RT:20(0)/10(0)
Plate Type(s):
WAVE

Defl/CSI Criteria

PP Deflection in	loc	L/defl	L/#
VERT(LL): 0.093	J	999	240
VERT(CL): 0.163	J	999	180
HORZ(LL): 0.046	H	-	-
HORZ(TL): 0.080	H	-	-

Creep Factor: 2.0
Max TC CSI: 0.613
Max BC CSI: 0.877
Max Web CSI: 0.321

VIEW Ver: 20.01.01A.0724.11

▲Maximum Reactions (lbs)

	Gravity			Non-Gravity		
Loc	R+	/ R-	/ Rh	/ Rw	/ U	/ RL
B	1207	/-	/-	/627	/238	/248
F	1207	/-	/-	/627	/238	/-

Wind reactions based on MWFRS
B Brg Width = 4.0 Min Req = 1.5
F Brg Width = 4.0 Min Req = 1.5
Bearings B & F are a rigid surface.
Members not listed have forces less than 375#

Maximum Top Chord Forces Per Ply (lbs)

Chords	Tens.	Comp.	Chords	Tens.	Comp.
B - C	500	- 1712	D - E	537	- 1532
C - D	538	- 1532	E - F	499	- 1712

Maximum Bot Chord Forces Per Ply (lbs)

Chords	Tens.	Comp.	Chords	Tens.	Comp.
B - J	1388	- 301	I - H	953	- 101
J - I	953	- 101	H - F	1388	- 309

Maximum Web Forces Per Ply (lbs)

Webs	Tens.	Comp.	Webs	Tens.	Comp.
J - D	607	- 198	D - H	606	- 198

Lumber

Top chord: 2x4 SP #2;
Bot chord: 2x4 SP #2;
Webs: 2x4 SP #3;

Loading

Truss passed check for 20 psf additional bottom chord live load in areas with 42"-high x 24"-wide clearance.

Wind

Wind loads based on MWFRS with additional C&C member design.

Additional Notes

The overall height of this truss excluding overhang is 8-3-15.

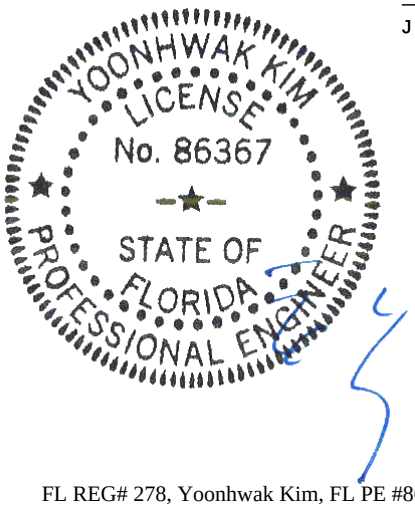

FL REG# 278, Yoonhwak Kim, FL PE #86367
12/23/2020

****WARNING**** READ AND FOLLOW ALL NOTES ON THIS DRAWING!
****IMPORTANT**** FURNISH THIS DRAWING TO ALL CONTRACTORS INCLUDING THE INSTALLERS

Trusses require extreme care in fabricating, handling, shipping, installing and bracing. Refer to and follow the latest edition of BCSI (Building Component Safety Information, by TPI and SBCA) for safety practices prior to performing these functions. Installers shall provide temporary bracing per BCSI. Unless noted otherwise, top chord shall have properly attached structural sheathing and bottom chord shall have a properly attached rigid ceiling. Locations shown for permanent lateral restraint of webs shall have bracing installed per BCSI sections B3, B7, or B10, as applicable. Apply plates to each face of truss and position as shown above and on the Joint Details, unless noted otherwise. Refer to drawings 160A-Z for standard plate positions. Refer to job's General Notes page for additional information.

Alpine, a division of ITW Building Components Group Inc. shall not be responsible for any deviation from this drawing, any failure to build the truss in conformance with ANSI/TPI 1, or for handling, shipping, installation and bracing of trusses. A seal on this drawing or cover page listing this drawing, indicates acceptance of professional engineering responsibility solely for the design shown. The suitability and use of this drawing for any structure is the responsibility of the Building Designer per ANSI/TPI 1 Sec.2.

For more information see these web sites: Alpine: alpineitw.com; TPI: tpinst.org; SBCA: sbcindustry.com; ICC: iccsafe.org; AWC: awc.org

ALPINE AN ITW COMPANY
6750 Forum Drive
Suite 305
Orlando FL, 32821

SEQN: 394514 COMN FROM: CDM	Ply: 1 Qty: 2	**Job Number:** 20-4682 Reddoch **Truss Label:** B02	Cust: R 215 JRef:1X1f2150003 T16 DrwNo: 358.20.1017.39857 / YK 12/23/2020

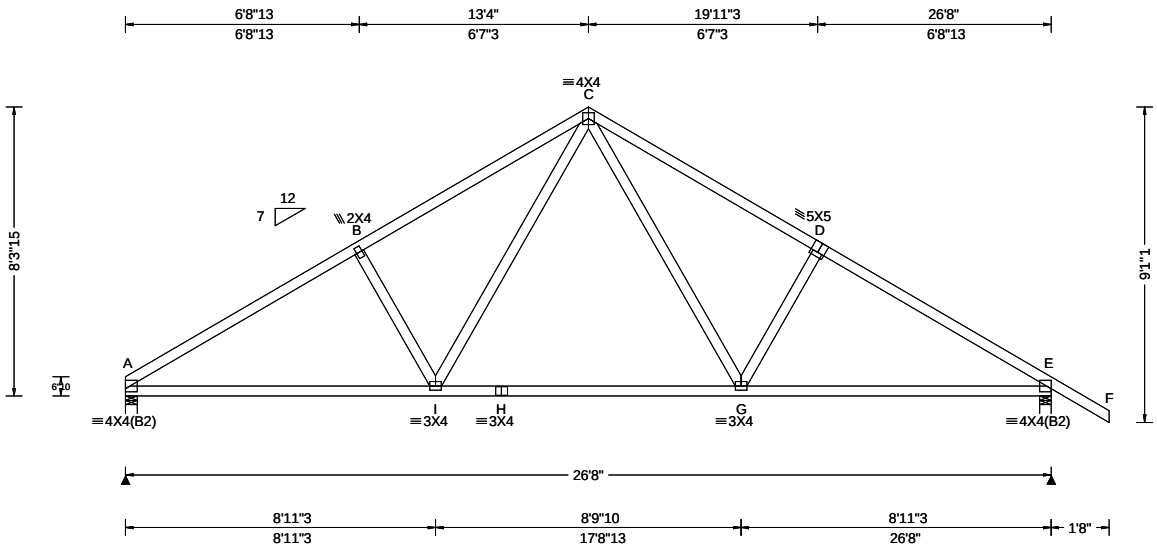

Loading Criteria (psf)

TCLL:	20.00
TCDL:	7.00
BCLL:	0.00
BCDL:	10.00
Des Ld:	37.00
NCBCLL:	10.00
Soffit:	2.00

Load Duration: 1.25
Spacing: 24.0 "

Wind Criteria
Wind Std: ASCE 7-10
Speed: 130 mph
Enclosure: Closed
Risk Category: II
EXP: C Kzt: NA
Mean Height: 15.00 ft
TCDL: 4.2 psf
BCDL: 5.0 psf
MWFRS Parallel Dist: h/2 to h
C&C Dist a: 3.00 ft
Loc. from endwall: not in 9.00 ft
GCpi: 0.18
Wind Duration: 1.60

Snow Criteria (Pg,Pf in PSF)
Pg: NA Ct: NA CAT: NA
Pf: NA Ce: NA
Lu: NA Cs: NA
Snow Duration: NA

Building Code:
FBC 2017 RES
TPI Std: 2014
Rep Fac: Yes
FT/RT:20(0)/10(0)
Plate Type(s):
WAVE

Defl/CSI Criteria

PP Deflection in	loc	L/defl	L/#
VERT(LL): 0.091	G	999	240
VERT(CL): 0.160	G	999	180
HORZ(LL): 0.045	G	-	-
HORZ(TL): 0.079	G	-	-

Creep Factor: 2.0
Max TC CSI: 0.613
Max BC CSI: 0.879
Max Web CSI: 0.251

VIEW Ver: 20.01.01A.0724.11

▲Maximum Reactions (lbs)

Loc	Gravity R+	/ R-	/ Rh	Non-Gravity / Rw	/ U	/ RL
A	1102	/-	/-	/544	/205	/229
E	1210	/-	/-	/627	/239	/-

Wind reactions based on MWFRS
A Brg Width = 4.0 Min Req = 1.5
E Brg Width = 4.0 Min Req = 1.5
Bearings A & E are a rigid surface.
Members not listed have forces less than 375#

Maximum Top Chord Forces Per Ply (lbs)

Chords	Tens.	Comp.	Chords	Tens.	Comp.
A - B	397	- 1731	C - D	417	- 1538
B - C	434	- 1551	D - E	380	- 1718

Maximum Bot Chord Forces Per Ply (lbs)

Chords	Tens.	Comp.	Chords	Tens.	Comp.
A - I	1410	- 235	H - G	959	- 70
I - H	959	- 70	G - E	1393	- 229

Maximum Web Forces Per Ply (lbs)

Webs	Tens.	Comp.	Webs	Tens.	Comp.
I - C	626	- 155	C - G	605	- 145

Lumber
Top chord: 2x4 SP #2;
Bot chord: 2x4 SP #2;
Webs: 2x4 SP #3;

Loading
Truss passed check for 20 psf additional bottom chord live load in areas with 42"-high x 24"-wide clearance.

Wind
Wind loads based on MWFRS with additional C&C member design.

Additional Notes
The overall height of this truss excluding overhang is 8-3-15.

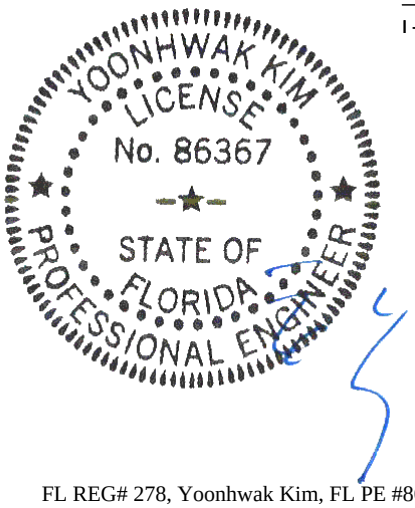

FL REG# 278, Yoonhwak Kim, FL PE #86367
12/23/2020

****WARNING**** READ AND FOLLOW ALL NOTES ON THIS DRAWING!
****IMPORTANT**** FURNISH THIS DRAWING TO ALL CONTRACTORS INCLUDING THE INSTALLERS

Trusses require extreme care in fabricating, handling, shipping, installing and bracing. Refer to and follow the latest edition of BCSI (Building Component Safety Information, by TPI and SBCA) for safety practices prior to performing these functions. Installers shall provide temporary bracing per BCSI. Unless noted otherwise, top chord shall have properly attached structural sheathing and bottom chord shall have a properly attached rigid ceiling. Locations shown for permanent lateral restraint of webs shall have bracing installed per BCSI sections B3, B7, or B10, as applicable. Apply plates to each face of truss and position as shown above and on the Joint Details, unless noted otherwise. Refer to drawings 160A-Z for standard plate positions. Refer to job's General Notes page for additional information.

Alpine, a division of ITW Building Components Group Inc. shall not be responsible for any deviation from this drawing, any failure to build the truss in conformance with ANSI/TPI 1, or for handling, shipping, installation and bracing of trusses. A seal on this drawing or cover page listing this drawing, indicates acceptance of professional engineering responsibility solely for the design shown. The suitability and use of this drawing for any structure is the responsibility of the Building Designer per ANSI/TPI 1 Sec.2.

For more information see these web sites: Alpine: alpineitw.com; TPI: tpinst.org; SBCA: sbcindustry.com; ICC: iccsafe.org; AWC: awc.org

ALPINE AN ITW COMPANY
6750 Forum Drive
Suite 305
Orlando FL, 32821

SEQN: 394515 GABL FROM: CDM	Ply: 1 Qty: 1	**Job Number:** 20-4682 Reddoch **Truss Label:** B03	Cust: R 215 JRef:1X1f2150003 T7 DrwNo: 358.20.1017.41810 / YK 12/23/2020

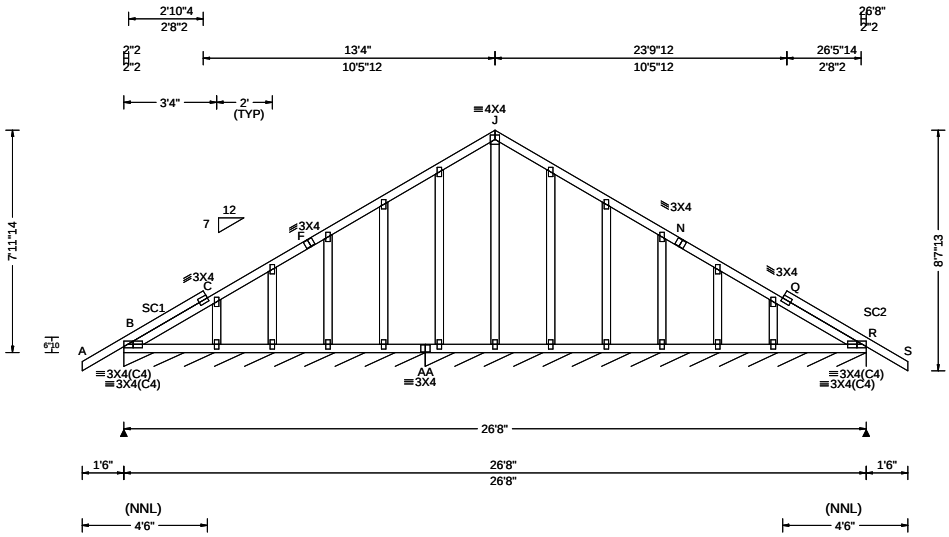

Loading Criteria (psf)	**Wind Criteria**	**Snow Criteria** (Pg,Pf in PSF)	**Defl/CSI Criteria**
TCLL: 20.00 TCDL: 7.00 BCLL: 0.00 BCDL: 10.00 Des Ld: 37.00 NCBCLL: 10.00 Soffit: 2.00 Load Duration: 1.25 Spacing: 24.0 "	Wind Std: ASCE 7-10 Speed: 130 mph Enclosure: Closed Risk Category: II EXP: C Kzt: NA Mean Height: 15.00 ft TCDL: 4.2 psf BCDL: 5.0 psf MWFRS Parallel Dist: 0 to h/2 C&C Dist a: 3.00 ft Loc. from endwall: Any GCpi: 0.18 Wind Duration: 1.60	Pg: NA Ct: NA CAT: NA Pf: NA Ce: NA Lu: NA Cs: NA Snow Duration: NA Building Code: FBC 2017 RES TPI Std: 2014 Rep Fac: Varies by Ld Case FT/RT:20(0)/10(0) Plate Type(s): WAVE	PP Deflection in loc L/defl L/# VERT(LL): 0.004 T 997 240 VERT(CL): 0.006 T 564 180 HORZ(LL): -0.001 D - - HORZ(TL): 0.002 D - - Creep Factor: 2.0 Max TC CSI: 0.468 Max BC CSI: 0.197 Max Web CSI: 0.115 VIEW Ver: 20.01.01A.0724.11

▲ Maximum Reactions (lbs), or *=PLF

	Gravity			Non-Gravity		
Loc	R+	/ R-	/ Rh	/ Rw	/ U	/ RL
B*	151	/-	/-	/71	/-	/8
AA*	162	/-	/-	/69	/-	/-

Wind reactions based on MWFRS
B Brg Width = 130 Min Req = -
AA Brg Width = 190 Min Req = -
Bearings B & AA are a rigid surface.
Members not listed have forces less than 375#

Maximum Top Chord Forces Per Ply (lbs)

Chords	Tens.	Comp.	Chords	Tens.	Comp.
B - C	655	-555	Q - R	465	-653

Maximum Bot Chord Forces Per Ply (lbs)

Chords	Tens.	Comp.
AA- R	477	-55

Lumber

Top chord: 2x4 SP #2;
Bot chord: 2x4 SP #2;
Webs: 2x4 SP #3;
Stack Chord: SC1 2x4 SP #2;
Stack Chord: SC2 2x4 SP #2;

Plating Notes

All plates are 2X4 except as noted.

Loading

Truss designed to support 2-0-0 top chord outlookers and cladding load not to exceed 2.30 PSF one face and 24.0" span opposite face. Top chord must not be cut or notched, unless specified otherwise.

Wind

Wind loads based on MWFRS with additional C&C member design.

Additional Notes

See DWGS A14015ENC101014 & GBLLETIN0118 for gable wind bracing and other requirements.

Stacked top chord must NOT be notched or cut in area (NNL). Dropped top chord braced at 24" oc intervals. Attach stacked top chord (SC) to dropped top chord in notchable area using 3x4 tie-plates 24" oc. Center plate on stacked/dropped chord interface, plate length perpendicular to chord length. Splice top chord in notchable area using 3x6.

The overall height of this truss excluding overhang is 7-11-14.

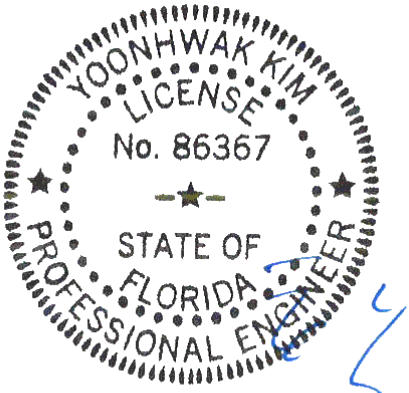

FL REG# 278, Yoonhwak Kim, FL PE #86367
12/23/2020

****WARNING**** READ AND FOLLOW ALL NOTES ON THIS DRAWING!
****IMPORTANT**** FURNISH THIS DRAWING TO ALL CONTRACTORS INCLUDING THE INSTALLERS

Trusses require extreme care in fabricating, handling, shipping, installing and bracing. Refer to and follow the latest edition of BCSI (Building Component Safety Information, by TPI and SBCA) for safety practices prior to performing these functions. Installers shall provide temporary bracing per BCSI. Unless noted otherwise, top chord shall have properly attached structural sheathing and bottom chord shall have a properly attached rigid ceiling. Locations shown for permanent lateral restraint of webs shall have bracing installed per BCSI sections B3, B7, or B10, as applicable. Apply plates to each face of truss and position as shown above and on the Joint Details, unless noted otherwise. Refer to drawings 160A-Z for standard plate positions. Refer to job's General Notes page for additional information.

Alpine, a division of ITW Building Components Group Inc. shall not be responsible for any deviation from this drawing, any failure to build the truss in conformance with ANSI/TPI 1, or for handling, shipping, installation and bracing of trusses. A seal on this drawing or cover page listing this drawing, indicates acceptance of professional engineering responsibility solely for the design shown. The suitability and use of this drawing for any structure is the responsibility of the Building Designer per ANSI/TPI 1 Sec.2.

For more information see these web sites: Alpine: alpineitw.com; TPI: tpinst.org; SBCA: sbcindustry.com; ICC: iccsafe.org; AWC: awc.org

ALPINE AN ITW COMPANY
6750 Forum Drive
Suite 305
Orlando FL, 32821

SEQN: 394516 COMN FROM: CDM	Ply: 1 Qty: 1	**Job Number:** 20-4682 Reddoch **Truss Label:** B04	Cust: R 215 JRef:1X1f2150003 T23 DrwNo: 358.20.1017.43403 / YK 12/23/2020

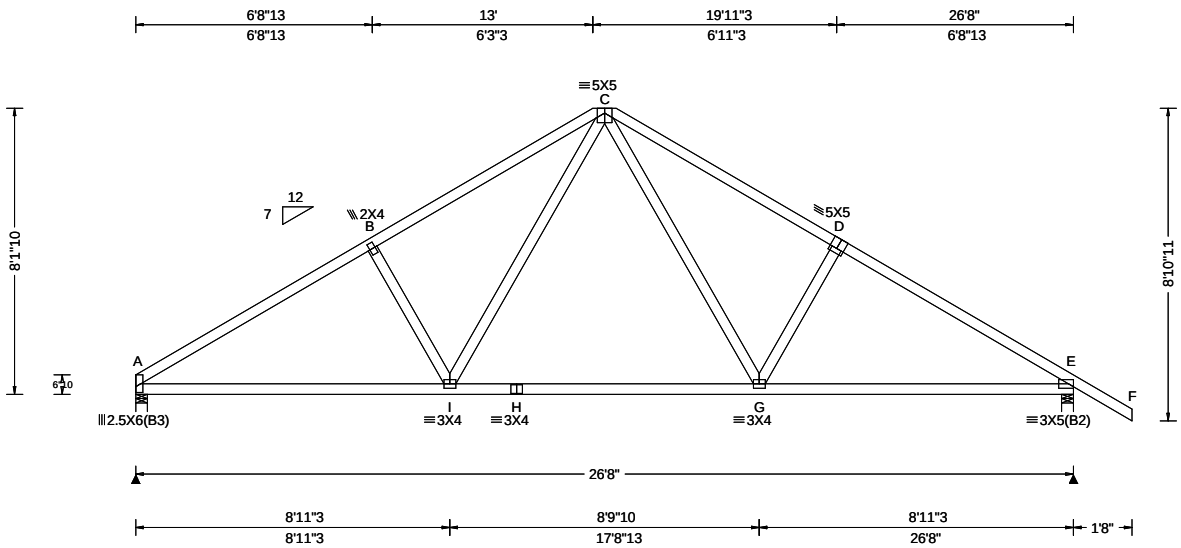

Loading Criteria (psf)

TCLL:	20.00
TCDL:	7.00
BCLL:	0.00
BCDL:	10.00
Des Ld:	37.00
NCBCLL:	10.00
Soffit:	2.00

Load Duration: 1.25
Spacing: 24.0 "

Wind Criteria
Wind Std: ASCE 7-10
Speed: 130 mph
Enclosure: Closed
Risk Category: II
EXP: C Kzt: NA
Mean Height: 15.00 ft
TCDL: 4.2 psf
BCDL: 5.0 psf
MWFRS Parallel Dist: h/2 to h
C&C Dist a: 3.00 ft
Loc. from endwall: not in 9.00 ft
GCpi: 0.18
Wind Duration: 1.60

Snow Criteria (Pg,Pf in PSF)
Pg: NA Ct: NA CAT: NA
Pf: NA Ce: NA
Lu: NA Cs: NA
Snow Duration: NA

Building Code:
FBC 2017 RES
TPI Std: 2014
Rep Fac: Yes
FT/RT:20(0)/10(0)
Plate Type(s):
WAVE

Defl/CSI Criteria

PP Deflection in	loc	L/defl	L/#
VERT(LL): 0.069	G	999	240
VERT(CL): 0.130	G	999	180
HORZ(LL): 0.032	G	-	-
HORZ(TL): 0.061	G	-	-

Creep Factor: 2.0
Max TC CSI: 0.521
Max BC CSI: 0.869
Max Web CSI: 0.252

VIEW Ver: 20.01.01A.0724.11

▲Maximum Reactions (lbs)

Loc	Gravity R+	/ R-	/ Rh	Non-Gravity / Rw	/ U	/ RL
A	1013	/-	/-	/546	/198	/225
E	1121	/-	/-	/629	/232	/-

Wind reactions based on MWFRS
A Brg Width = 4.0 Min Req = 1.5
E Brg Width = 4.0 Min Req = 1.5
Bearings A & E are a rigid surface.
Members not listed have forces less than 375#

Maximum Top Chord Forces Per Ply (lbs)

Chords	Tens.	Comp.	Chords	Tens.	Comp.
A - B	383	- 1543	C - D	405	- 1351
B - C	421	- 1363	D - E	367	- 1530

Maximum Bot Chord Forces Per Ply (lbs)

Chords	Tens.	Comp.	Chords	Tens.	Comp.
A - I	1252	- 223	H - G	848	- 59
I - H	848	- 59	G - E	1236	- 218

Maximum Web Forces Per Ply (lbs)

Webs	Tens.	Comp.	Webs	Tens.	Comp.
I - C	518	- 156	C - G	497	- 146

Lumber

Top chord: 2x4 SP #2;
Bot chord: 2x4 SP #2;
Webs: 2x4 SP #3;

Wind

Wind loads based on MWFRS with additional C&C member design.

Additional Notes

The overall height of this truss excluding overhang is 8-1-10.

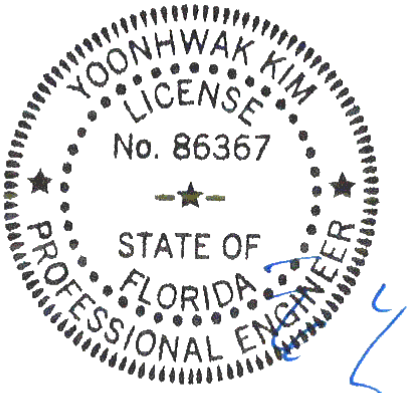

FL REG# 278, Yoonhwak Kim, FL PE #86367
12/23/2020

****WARNING**** READ AND FOLLOW ALL NOTES ON THIS DRAWING!
****IMPORTANT**** FURNISH THIS DRAWING TO ALL CONTRACTORS INCLUDING THE INSTALLERS

Trusses require extreme care in fabricating, handling, shipping, installing and bracing. Refer to and follow the latest edition of BCSI (Building Component Safety Information, by TPI and SBCA) for safety practices prior to performing these functions. Installers shall provide temporary bracing per BCSI. Unless noted otherwise, top chord shall have properly attached structural sheathing and bottom chord shall have a properly attached rigid ceiling. Locations shown for permanent lateral restraint of webs shall have bracing installed per BCSI sections B3, B7, or B10, as applicable. Apply plates to each face of truss and position as shown above and on the Joint Details, unless noted otherwise. Refer to drawings 160A-Z for standard plate positions. Refer to job's General Notes page for additional information.

Alpine, a division of ITW Building Components Group Inc. shall not be responsible for any deviation from this drawing, any failure to build the truss in conformance with ANSI/TPI 1, or for handling, shipping, installation and bracing of trusses. A seal on this drawing or cover page listing this drawing, indicates acceptance of professional engineering responsibility solely for the design shown. The suitability and use of this drawing for any structure is the responsibility of the Building Designer per ANSI/TPI 1 Sec.2.

For more information see these web sites: Alpine: alpineitw.com; TPI: tpinst.org; SBCA: sbcindustry.com; ICC: iccsafe.org; AWC: awc.org

ALPINE AN ITW COMPANY
6750 Forum Drive
Suite 305
Orlando FL, 32821

SEQN: 394517 HIPS FROM: CDM	Ply: 1 Qty: 1	**Job Number:** 20-4682 Reddoch **Truss Label:** B05	Cust: R 215 JRef:1X1f2150003 T26 DrwNo: 358.20.1017.45120 / YK 12/23/2020

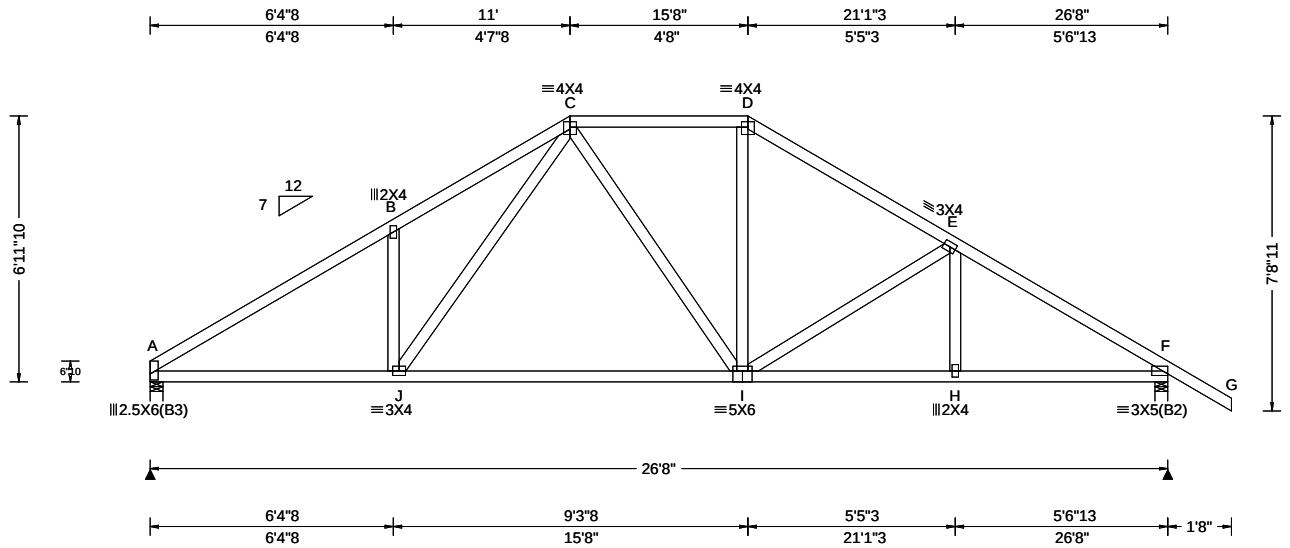

Loading Criteria (psf)

TCLL:	20.00
TCDL:	7.00
BCLL:	0.00
BCDL:	10.00
Des Ld:	37.00
NCBCLL:	10.00
Soffit:	2.00

Load Duration: 1.25
Spacing: 24.0 "

Wind Criteria
Wind Std: ASCE 7-10
Speed: 130 mph
Enclosure: Closed
Risk Category: II
EXP: C Kzt: NA
Mean Height: 15.00 ft
TCDL: 4.2 psf
BCDL: 5.0 psf
MWFRS Parallel Dist: h/2 to h
C&C Dist a: 3.00 ft
Loc. from endwall: not in 9.00 ft
GCpi: 0.18
Wind Duration: 1.60

Snow Criteria (Pg,Pf in PSF)
Pg: NA Ct: NA CAT: NA
Pf: NA Ce: NA
Lu: NA Cs: NA
Snow Duration: NA

Building Code:
FBC 2017 RES
TPI Std: 2014
Rep Fac: Yes
FT/RT:20(0)/10(0)
Plate Type(s):
WAVE

Defl/CSI Criteria

PP Deflection in	loc	L/defl	L/#
VERT(LL): 0.070	I	999	240
VERT(CL): 0.132	I	999	180
HORZ(LL): 0.037	H	-	-
HORZ(TL): 0.070	H	-	-

Creep Factor: 2.0
Max TC CSI: 0.519
Max BC CSI: 0.771
Max Web CSI: 0.259

VIEW Ver: 20.01.01A.0724.11

▲ Maximum Reactions (lbs)

Loc	Gravity R+	/ R-	/ Rh	Non-Gravity / Rw	/ U	/ RL
A	1013	/-	/-	/547	/208	/194
F	1121	/-	/-	/630	/242	/-

Wind reactions based on MWFRS
A Brg Width = 4.0 Min Req = 1.5
F Brg Width = 4.0 Min Req = 1.5
Bearings A & F are a rigid surface.
Members not listed have forces less than 375#

Maximum Top Chord Forces Per Ply (lbs)

Chords	Tens.	Comp.	Chords	Tens.	Comp.
A - B	428	-1574	D - E	396	-1230
B - C	534	-1531	E - F	420	-1557
C - D	387	-1004			

Maximum Bot Chord Forces Per Ply (lbs)

Chords	Tens.	Comp.	Chords	Tens.	Comp.
A - J	1276	-264	I - H	1263	-273
J - I	967	-151	H - F	1264	-273

Maximum Web Forces Per Ply (lbs)

Webs	Tens.	Comp.
J - C	525	-185

Lumber
Top chord: 2x4 SP #2;
Bot chord: 2x4 SP #2;
Webs: 2x4 SP #3;

Wind
Wind loads based on MWFRS with additional C&C member design.

Additional Notes
The overall height of this truss excluding overhang is 6-11-10.

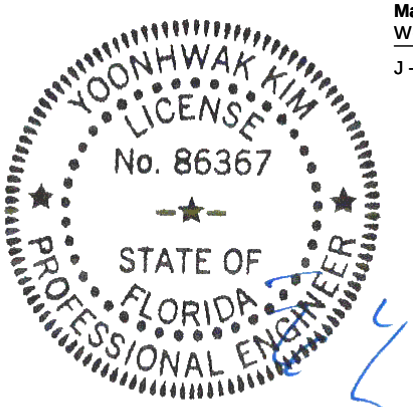

FL REG# 278, Yoonhwak Kim, FL PE #86367
12/23/2020

****WARNING**** READ AND FOLLOW ALL NOTES ON THIS DRAWING!
****IMPORTANT**** FURNISH THIS DRAWING TO ALL CONTRACTORS INCLUDING THE INSTALLERS

Trusses require extreme care in fabricating, handling, shipping, installing and bracing. Refer to and follow the latest edition of BCSI (Building Component Safety Information, by TPI and SBCA) for safety practices prior to performing these functions. Installers shall provide temporary bracing per BCSI. Unless noted otherwise, top chord shall have properly attached structural sheathing and bottom chord shall have a properly attached rigid ceiling. Locations shown for permanent lateral restraint of webs shall have bracing installed per BCSI sections B3, B7, or B10, as applicable. Apply plates to each face of truss and position as shown above and on the Joint Details, unless noted otherwise. Refer to drawings 160A-Z for standard plate positions. Refer to job's General Notes page for additional information.

Alpine, a division of ITW Building Components Group Inc. shall not be responsible for any deviation from this drawing, any failure to build the truss in conformance with ANSI/TPI 1, or for handling, shipping, installation and bracing of trusses. A seal on this drawing or cover page listing this drawing, indicates acceptance of professional engineering responsibility solely for the design shown. The suitability and use of this drawing for any structure is the responsibility of the Building Designer per ANSI/TPI 1 Sec.2.

For more information see these web sites: Alpine: alpineitw.com; TPI: tpinst.org; SBCA: sbcindustry.com; ICC: iccsafe.org; AWC: awc.org

ALPINE AN ITW COMPANY
6750 Forum Drive
Suite 305
Orlando FL, 32821

SEQN: 394518 HIPS FROM: CDM	Ply: 1 Qty: 1	**Job Number:** 20-4682 Reddoch **Truss Label:** B06	Cust: R 215 JRef:1X1f2150003 T5 DrwNo: 358.20.1017.46467 / YK 12/23/2020

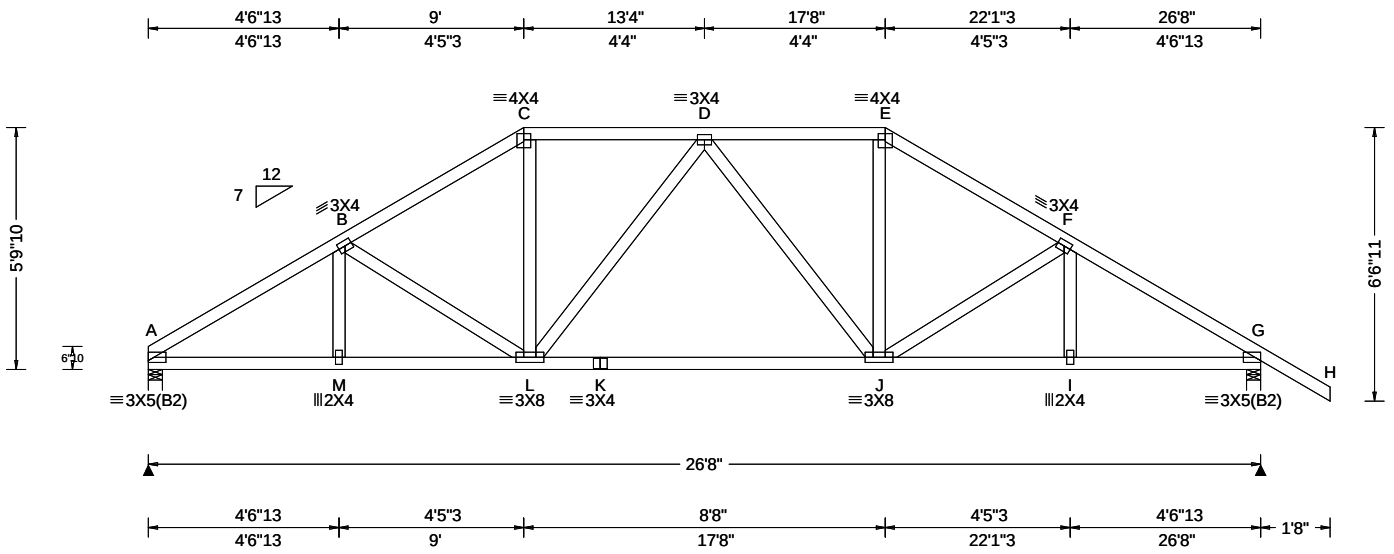

Loading Criteria (psf)

TCLL:	20.00
TCDL:	7.00
BCLL:	0.00
BCDL:	10.00
Des Ld:	37.00
NCBCLL:	10.00
Soffit:	2.00

Load Duration: 1.25
Spacing: 24.0 "

Wind Criteria
Wind Std: ASCE 7-10
Speed: 130 mph
Enclosure: Closed
Risk Category: II
EXP: C Kzt: NA
Mean Height: 15.00 ft
TCDL: 4.2 psf
BCDL: 5.0 psf
MWFRS Parallel Dist: h/2 to h
C&C Dist a: 3.00 ft
Loc. from endwall: not in 9.00 ft
GCpi: 0.18
Wind Duration: 1.60

Snow Criteria (Pg,Pf in PSF)
Pg: NA Ct: NA CAT: NA
Pf: NA Ce: NA
Lu: NA Cs: NA
Snow Duration: NA

Building Code:
FBC 2017 RES
TPI Std: 2014
Rep Fac: Yes
FT/RT:20(0)/10(0)
Plate Type(s):
WAVE

Defl/CSI Criteria

PP Deflection in	loc	L/defl	L/#
VERT(LL): 0.076	D	999	240
VERT(CL): 0.144	D	999	180
HORZ(LL): 0.039	I	-	-
HORZ(TL): 0.074	I	-	-

Creep Factor: 2.0
Max TC CSI: 0.505
Max BC CSI: 0.700
Max Web CSI: 0.154

VIEW Ver: 20.01.01A.0724.11

▲Maximum Reactions (lbs)

Loc	Gravity R+	/ R-	/ Rh	Non-Gravity / Rw	/ U	/ RL
A	1013	/-	/-	/544	/211	/165
G	1121	/-	/-	/627	/245	/-

Wind reactions based on MWFRS
A Brg Width = 4.0 Min Req = 1.5
G Brg Width = 4.0 Min Req = 1.5
Bearings A & G are a rigid surface.
Members not listed have forces less than 375#

Maximum Top Chord Forces Per Ply (lbs)

Chords	Tens.	Comp.	Chords	Tens.	Comp.
A - B	456	- 1583	D - E	408	- 1118
B - C	436	- 1347	E - F	426	- 1340
C - D	407	- 1123	F - G	437	- 1558

Maximum Bot Chord Forces Per Ply (lbs)

Chords	Tens.	Comp.	Chords	Tens.	Comp.
A - M	1298	- 305	K - J	1210	- 253
M - L	1297	- 306	J - I	1269	- 296
L - K	1210	- 253	I - G	1269	- 295

Maximum Web Forces Per Ply (lbs)

Webs	Tens.	Comp.	Webs	Tens.	Comp.
C - L	405	- 103	J - E	402	- 95

Lumber
Top chord: 2x4 SP #2;
Bot chord: 2x4 SP #2;
Webs: 2x4 SP #3;

Wind
Wind loads based on MWFRS with additional C&C member design.

Additional Notes
The overall height of this truss excluding overhang is 5-9-10.

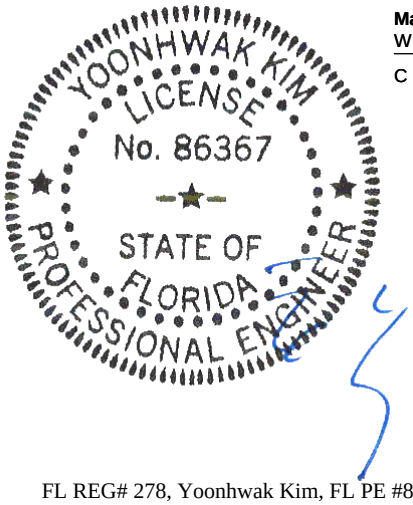

FL REG# 278, Yoonhwak Kim, FL PE #86367
12/23/2020

****WARNING**** READ AND FOLLOW ALL NOTES ON THIS DRAWING!
****IMPORTANT**** FURNISH THIS DRAWING TO ALL CONTRACTORS INCLUDING THE INSTALLERS

Trusses require extreme care in fabricating, handling, shipping, installing and bracing. Refer to and follow the latest edition of BCSI (Building Component Safety Information, by TPI and SBCA) for safety practices prior to performing these functions. Installers shall provide temporary bracing per BCSI. Unless noted otherwise, top chord shall have properly attached structural sheathing and bottom chord shall have a properly attached rigid ceiling. Locations shown for permanent lateral restraint of webs shall have bracing installed per BCSI sections B3, B7, or B10, as applicable. Apply plates to each face of truss and position as shown above and on the Joint Details, unless noted otherwise. Refer to drawings 160A-Z for standard plate positions. Refer to job's General Notes page for additional information.

Alpine, a division of ITW Building Components Group Inc. shall not be responsible for any deviation from this drawing, any failure to build the truss in conformance with ANSI/TPI 1, or for handling, shipping, installation and bracing of trusses. A seal on this drawing or cover page listing this drawing, indicates acceptance of professional engineering responsibility solely for the design shown. The suitability and use of this drawing for any structure is the responsibility of the Building Designer per ANSI/TPI 1 Sec.2.

For more information see these web sites: Alpine: alpineitw.com; TPI: tpinst.org; SBCA: sbcindustry.com; ICC: iccsafe.org; AWC: awc.org

ALPINE AN ITW COMPANY
6750 Forum Drive
Suite 305
Orlando FL, 32821

SEQN: 394542 HIPM FROM: CDM	Ply: 1 Qty: 1	**Job Number:** 20-4682 Reddoch **Truss Label:** B07		Cust: R 215 JRef:1X1f2150003 T18 DrwNo: 358.20.1017.48083 / YK 12/23/2020

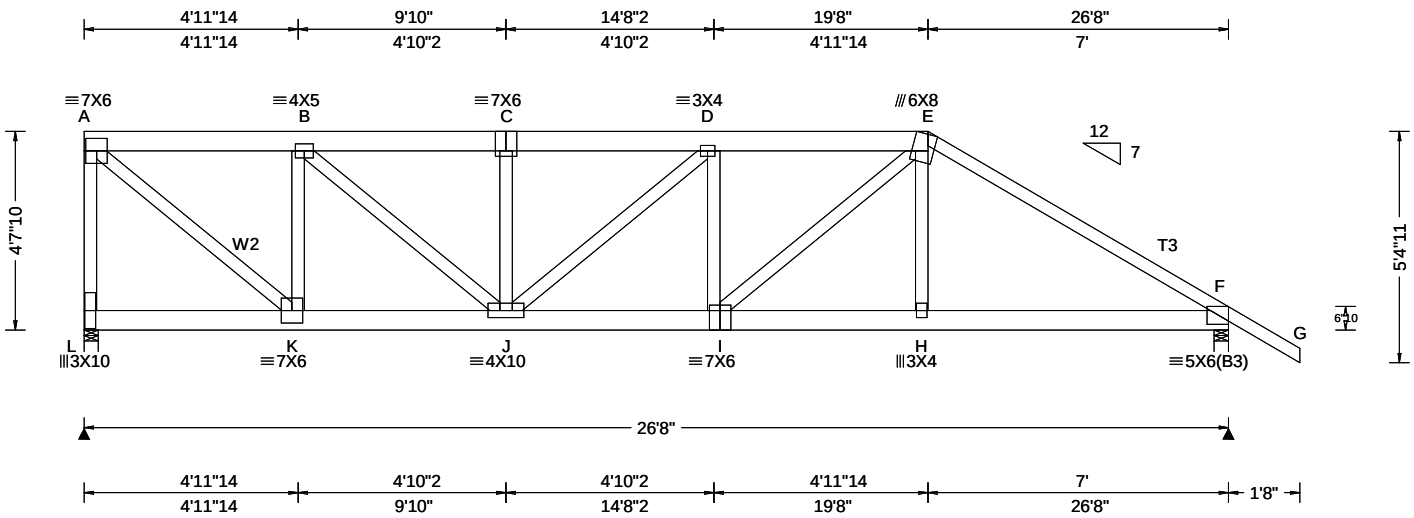

Loading Criteria (psf)

TCLL:	20.00
TCDL:	7.00
BCLL:	0.00
BCDL:	10.00
Des Ld:	37.00
NCBCLL:	10.00
Soffit:	2.00

Load Duration: 1.25
Spacing: 24.0 "

Wind Criteria
Wind Std: ASCE 7-10
Speed: 130 mph
Enclosure: Closed
Risk Category: II
EXP: C Kzt: NA
Mean Height: 15.00 ft
TCDL: 4.2 psf
BCDL: 5.0 psf
MWFRS Parallel Dist: 0 to h/2
C&C Dist a: 3.00 ft
Loc. from endwall: not in 4.50 ft
GCpi: 0.18
Wind Duration: 1.60

Snow Criteria (Pg,Pf in PSF)
Pg: NA Ct: NA CAT: NA
Pf: NA Ce: NA
Lu: NA Cs: NA
Snow Duration: NA

Building Code:
FBC 2017 RES
TPI Std: 2014
Rep Fac: Varies by Ld Case
FT/RT:20(0)/10(0)
Plate Type(s):
WAVE

Defl/CSI Criteria

PP Deflection in	loc	L/defl	L/#
VERT(LL): 0.122	D	999	240
VERT(CL): 0.226	D	999	180
HORZ(LL): 0.034	H	-	-
HORZ(TL): 0.062	H	-	-

Creep Factor: 2.0
Max TC CSI: 0.351
Max BC CSI: 0.350
Max Web CSI: 0.869

VIEW Ver: 20.01.01A.0724.11

▲Maximum Reactions (lbs)

Loc	Gravity R+	/ R-	/ Rh	Non-Gravity / Rw	/ U	/ RL
L	2789	/-	/-	/-	/702	/-
F	2375	/-	/-	/-	/631	/-

Wind reactions based on MWFRS
L Brg Width = 4.0 Min Req = 2.3
F Brg Width = 4.0 Min Req = 2.0
Bearings L & F are a rigid surface.
Members not listed have forces less than 375#

Maximum Top Chord Forces Per Ply (lbs)

Chords	Tens.	Comp.	Chords	Tens.	Comp.
A - B	664	-2526	D - E	1097	-4153
B - C	1027	-3892	E - F	1029	-3845
C - D	1027	-3892			

Maximum Bot Chord Forces Per Ply (lbs)

Chords	Tens.	Comp.	Chords	Tens.	Comp.
K - J	2649	-707	I - H	3251	-848
J - I	4177	-1112	H - F	3233	-849

Maximum Web Forces Per Ply (lbs)

Webs	Tens.	Comp.	Webs	Tens.	Comp.
A - L	715	-2547	C - J	248	-497
A - K	3335	-877	J - D	114	-381
K - B	612	-1764	I - E	1193	-329
B - J	1663	-428	H - E	505	0

Lumber

Top chord: 2x6 SP 2400f-2.0E; T3 2x4 SP M-31;
Bot chord: 2x6 SP 2400f-2.0E;
Webs: 2x4 SP #3; W2 2x4 SP #2;

Special Loads

------(Lumber Dur.Fac.=1.25 / Plate Dur.Fac.=1.25)

TC: From	28 plf at	0.00 to	28 plf at	19.67
TC: From	56 plf at	19.67 to	56 plf at	28.33
BC: From	10 plf at	0.00 to	10 plf at	19.64
BC: From	20 plf at	19.64 to	20 plf at	26.67
BC: From	5 plf at	26.67 to	5 plf at	28.33

TC: 183 lb Conc. Load at 0.27
TC: 175 lb Conc. Load at 1.60, 3.60, 5.60, 7.60 9.60,11.60,13.60,15.60,17.60
TC: 258 lb Conc. Load at 19.64
BC: 133 lb Conc. Load at 0.27
BC: 131 lb Conc. Load at 1.60, 3.60, 5.60, 7.60 9.60,11.60,13.60,15.60,17.60
BC: 451 lb Conc. Load at 19.64

Wind

Wind loads and reactions based on MWFRS.

Left end vertical not exposed to wind pressure.

Additional Notes

The overall height of this truss excluding overhang is 4-7-10.

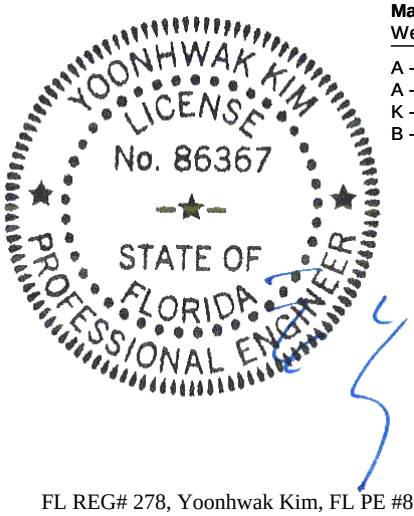

FL REG# 278, Yoonhwak Kim, FL PE #86367
12/23/2020

****WARNING**** READ AND FOLLOW ALL NOTES ON THIS DRAWING!
****IMPORTANT**** FURNISH THIS DRAWING TO ALL CONTRACTORS INCLUDING THE INSTALLERS

Trusses require extreme care in fabricating, handling, shipping, installing and bracing. Refer to and follow the latest edition of BCSI (Building Component Safety Information, by TPI and SBCA) for safety practices prior to performing these functions. Installers shall provide temporary bracing per BCSI. Unless noted otherwise, top chord shall have properly attached structural sheathing and bottom chord shall have a properly attached rigid ceiling. Locations shown for permanent lateral restraint of webs shall have bracing installed per BCSI sections B3, B7, or B10, as applicable. Apply plates to each face of truss and position as shown above and on the Joint Details, unless noted otherwise. Refer to drawings 160A-Z for standard plate positions. Refer to job's General Notes page for additional information.

Alpine, a division of ITW Building Components Group Inc. shall not be responsible for any deviation from this drawing, any failure to build the truss in conformance with ANSI/TPI 1, or for handling, shipping, installation and bracing of trusses. A seal on this drawing or cover page listing this drawing, indicates acceptance of professional engineering responsibility solely for the design shown. The suitability and use of this drawing for any structure is the responsibility of the Building Designer per ANSI/TPI 1 Sec.2.

For more information see these web sites: Alpine: alpineitw.com; TPI: tpinst.org; SBCA: sbcindustry.com; ICC: iccsafe.org; AWC: awc.org

ALPINE AN ITW COMPANY
6750 Forum Drive
Suite 305
Orlando FL, 32821

SEQN: 394519 SPEC	Ply: 1	**Job Number:** 20-4682	Cust: R 215 JRef:1X1f2150003 T13
FROM: CDM	Qty: 2	Reddoch	DrwNo: 358.20.1017.51023
		Truss Label: C01	/ YK 12/23/2020

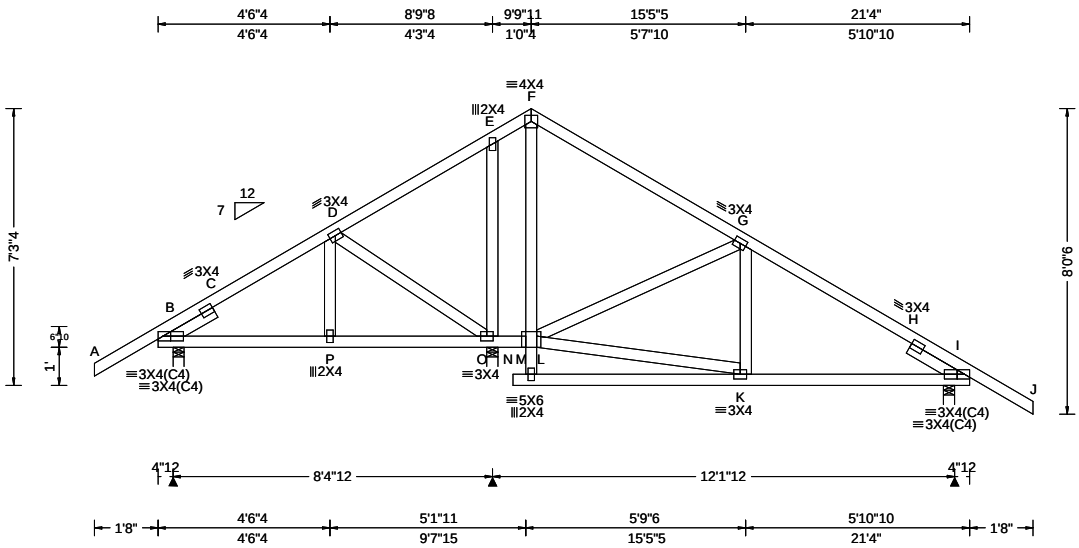

Loading Criteria (psf)

TCLL:	20.00
TCDL:	7.00
BCLL:	0.00
BCDL:	10.00
Des Ld:	37.00
NCBCLL:	10.00
Soffit:	2.00

Load Duration: 1.25
Spacing: 24.0 "

Wind Criteria
Wind Std: ASCE 7-10
Speed: 130 mph
Enclosure: Closed
Risk Category: II
EXP: C Kzt: NA
Mean Height: 15.00 ft
TCDL: 4.2 psf
BCDL: 5.0 psf
MWFRS Parallel Dist: 0 to h/2
C&C Dist a: 3.00 ft
Loc. from endwall: Any
GCpi: 0.18
Wind Duration: 1.60

Snow Criteria (Pg,Pf in PSF)
Pg: NA Ct: NA CAT: NA
Pf: NA Ce: NA
Lu: NA Cs: NA
Snow Duration: NA

Building Code:
FBC 2017 RES
TPI Std: 2014
Rep Fac: Yes
FT/RT:20(0)/10(0)
Plate Type(s):
WAVE

Defl/CSI Criteria

PP Deflection in	loc	L/defl	L/#
VERT(LL): 0.023	K	999	240
VERT(CL): 0.045	K	999	180
HORZ(LL): 0.018	H	-	-
HORZ(TL): 0.036	H	-	-

Creep Factor: 2.0
Max TC CSI: 0.385
Max BC CSI: 0.399
Max Web CSI: 0.240

VIEW Ver: 20.01.01A.0724.11

▲Maximum Reactions (lbs)

Loc	Gravity R+	/ R-	/ Rh	Non-Gravity / Rw	/ U	/ RL
B	596	/-	/-	/299	/113	/214
O	551	/-	/-	/376	/132	/-
I	719	/-	/-	/472	/143	/-

Wind reactions based on MWFRS
B Brg Width = 3.5 Min Req = 1.5
O Brg Width = 3.5 Min Req = 1.5
I Brg Width = 3.5 Min Req = 1.5
Bearings B, O, & I are a rigid surface.
Members not listed have forces less than 375#

Maximum Top Chord Forces Per Ply (lbs)

Chords	Tens.	Comp.	Chords	Tens.	Comp.
B - C	391	- 790	G - H	195	- 695
C - D	119	- 483	H - I	420	- 1031
F - G	119	- 408			

Maximum Bot Chord Forces Per Ply (lbs)

Chords	Tens.	Comp.
K - I	545	- 52

Maximum Web Forces Per Ply (lbs)

Webs	Tens.	Comp.
L - K	524	- 50

Lumber
Top chord: 2x4 SP #2;
Bot chord: 2x4 SP #2;
Webs: 2x4 SP #3;
Lt Slider: 2x4 SP #3; block length = 1.500'
Rt Slider: 2x4 SP #3; block length = 1.606'

Wind
Wind loads based on MWFRS with additional C&C member design.
Left and right cantilevers are exposed to wind

Additional Notes
The overall height of this truss excluding overhang is 6-3-4.

YOONHWAK KIM
LICENSE
No. 86367
STATE OF
FLORIDA
PROFESSIONAL ENGINEER

FL REG# 278, Yoonhwak Kim, FL PE #86367
12/23/2020

****WARNING**** READ AND FOLLOW ALL NOTES ON THIS DRAWING!
****IMPORTANT**** FURNISH THIS DRAWING TO ALL CONTRACTORS INCLUDING THE INSTALLERS

Trusses require extreme care in fabricating, handling, shipping, installing and bracing. Refer to and follow the latest edition of BCSI (Building Component Safety Information, by TPI and SBCA) for safety practices prior to performing these functions. Installers shall provide temporary bracing per BCSI. Unless noted otherwise, top chord shall have properly attached structural sheathing and bottom chord shall have a properly attached rigid ceiling. Locations shown for permanent lateral restraint of webs shall have bracing installed per BCSI sections B3, B7, or B10, as applicable. Apply plates to each face of truss and position as shown above and on the Joint Details, unless noted otherwise. Refer to drawings 160A-Z for standard plate positions. Refer to job's General Notes page for additional information.

Alpine, a division of ITW Building Components Group Inc. shall not be responsible for any deviation from this drawing, any failure to build the truss in conformance with ANSI/TPI 1, or for handling, shipping, installation and bracing of trusses. A seal on this drawing or cover page listing this drawing, indicates acceptance of professional engineering responsibility solely for the design shown. The suitability and use of this drawing for any structure is the responsibility of the Building Designer per ANSI/TPI 1 Sec.2.

For more information see these web sites: Alpine: alpineitw.com; TPI: tpinst.org; SBCA: sbcindustry.com; ICC: iccsafe.org; AWC: awc.org

ALPINE AN ITW COMPANY
6750 Forum Drive
Suite 305
Orlando FL, 32821

SEQN: 394520 GABL FROM: CDM	Ply: 1 Qty: 1	**Job Number:** 20-4682 Reddoch **Truss Label:** C02	Cust: R 215 JRef:1X1f2150003 T25 DrwNo: 358.20.1017.53977 / YK 12/23/2020

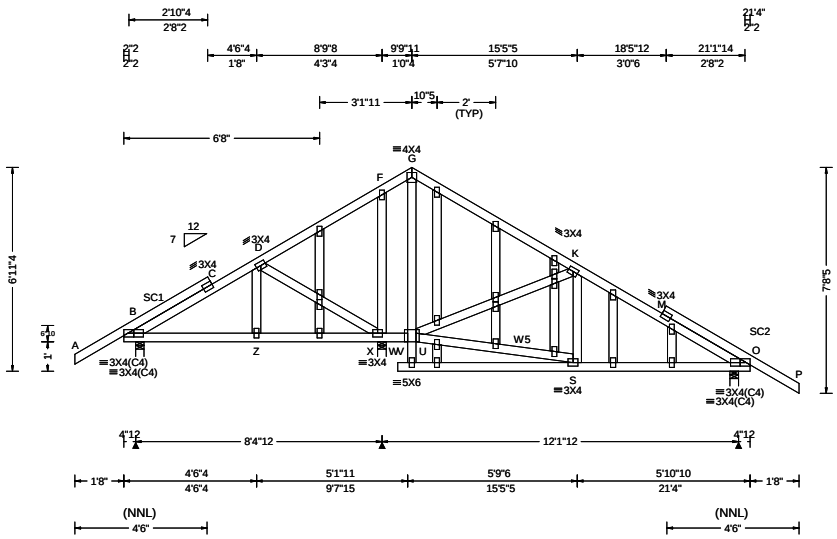

Loading Criteria (psf)

TCLL: 20.00
TCDL: 7.00
BCLL: 0.00
BCDL: 10.00
Des Ld: 37.00
NCBCLL: 10.00
Soffit: 2.00
Load Duration: 1.25
Spacing: 24.0 "

Wind Criteria

Wind Std: ASCE 7-10
Speed: 130 mph
Enclosure: Closed
Risk Category: II
EXP: C Kzt: NA
Mean Height: 15.00 ft
TCDL: 4.2 psf
BCDL: 5.0 psf
MWFRS Parallel Dist: 0 to h/2
C&C Dist a: 3.00 ft
Loc. from endwall: Any
GCpi: 0.18
Wind Duration: 1.60

Snow Criteria (Pg,Pf in PSF)

Pg: NA Ct: NA CAT: NA
Pf: NA Ce: NA
Lu: NA Cs: NA
Snow Duration: NA

Building Code:
FBC 2017 RES
TPI Std: 2014
Rep Fac: Varies by Ld Case
FT/RT:20(0)/10(0)
Plate Type(s):
WAVE

Defl/CSI Criteria

PP Deflection in	loc	L/defl	L/#
VERT(LL): 0.091	I	999	240
VERT(CL): 0.158	I	920	180
HORZ(LL): -0.021	I	-	-
HORZ(TL): 0.037	I	-	-

Creep Factor: 2.0
Max TC CSI: 0.671
Max BC CSI: 0.848
Max Web CSI: 0.733

VIEW Ver: 20.01.01A.0724.11

▲ Maximum Reactions (lbs)

Loc	Gravity R+	/ R-	/ Rh	Non-Gravity / Rw	/ U	/ RL
B	1092	/-	/-	/554	/-	/99
X	1060	/-	/-	/446	/-	/-
O	1299	/-	/-	/637	/-	/-

Wind reactions based on MWFRS
B Brg Width = 3.5 Min Req = 1.5
X Brg Width = 3.5 Min Req = 1.5
O Brg Width = 3.5 Min Req = 1.5
Bearings B, X, & O are a rigid surface.
Members not listed have forces less than 375#

Maximum Top Chord Forces Per Ply (lbs)

Chords	Tens.	Comp.	Chords	Tens.	Comp.
B - C	871	- 1818	G - K	288	- 665
C - D	276	- 846	K - M	451	- 1214
D - F	362	- 584	M - O	654	- 1580
F - G	332	- 640			

Maximum Bot Chord Forces Per Ply (lbs)

Chords	Tens.	Comp.	Chords	Tens.	Comp.
B - Z	733	0	X - U	419	- 12
Z - X	732	0	S - O	1027	- 92

Maximum Web Forces Per Ply (lbs)

Webs	Tens.	Comp.	Webs	Tens.	Comp.
X - F	0	- 531	U - S	1000	- 88
G - U	470	- 195	U - K	440	- 663

Lumber

Top chord: 2x4 SP #2;
Bot chord: 2x4 SP #2;
Webs: 2x4 SP #3; W5 2x4 SP #2;
Stack Chord: SC1 2x4 SP #2;
Stack Chord: SC2 2x4 SP #2;

Plating Notes

All plates are 2X4 except as noted.

Loading

Truss designed to support 2-0-0 top chord outlookers and cladding load not to exceed 2.30 PSF one face and 24.0" span opposite face. Top chord must not be cut or notched, unless specified otherwise.

Wind

Wind loads based on MWFRS with additional C&C member design.

Left and right cantilevers are exposed to wind

Additional Notes

See DWGS A14015ENC101014 & GBLLETIN0118 for gable wind bracing and other requirements.

Stacked top chord must NOT be notched or cut in area (NNL). Dropped top chord braced at 24" oc intervals. Attach stacked top chord (SC) to dropped top chord in notchable area using 3x4 tie-plates 24" oc. Center plate on stacked/dropped chord interface, plate length perpendicular to chord length. Splice top chord in notchable area using 3x6.

The overall height of this truss excluding overhang is 5-11-4.

YOONHWAK KIM
LICENSE
No. 86367
STATE OF
FLORIDA
PROFESSIONAL ENGINEER

FL REG# 278, Yoonhwak Kim, FL PE #86367
12/23/2020

****WARNING**** READ AND FOLLOW ALL NOTES ON THIS DRAWING!
****IMPORTANT**** FURNISH THIS DRAWING TO ALL CONTRACTORS INCLUDING THE INSTALLERS

Trusses require extreme care in fabricating, handling, shipping, installing and bracing. Refer to and follow the latest edition of BCSI (Building Component Safety Information, by TPI and SBCA) for safety practices prior to performing these functions. Installers shall provide temporary bracing per BCSI. Unless noted otherwise, top chord shall have properly attached structural sheathing and bottom chord shall have a properly attached rigid ceiling. Locations shown for permanent lateral restraint of webs shall have bracing installed per BCSI sections B3, B7, or B10, as applicable. Apply plates to each face of truss and position as shown above and on the Joint Details, unless noted otherwise. Refer to drawings 160A-Z for standard plate positions. Refer to job's General Notes page for additional information.

Alpine, a division of ITW Building Components Group Inc. shall not be responsible for any deviation from this drawing, any failure to build the truss in conformance with ANSI/TPI 1, or for handling, shipping, installation and bracing of trusses. A seal on this drawing or cover page listing this drawing, indicates acceptance of professional engineering responsibility solely for the design shown. The suitability and use of this drawing for any structure is the responsibility of the Building Designer per ANSI/TPI 1 Sec.2.

For more information see these web sites: Alpine: alpineitw.com; TPI: tpinst.org; SBCA: sbcindustry.com; ICC: iccsafe.org; AWC: awc.org

ALPINE
AN ITW COMPANY
6750 Forum Drive
Suite 305
Orlando FL, 32821

SEQN: 394521 GABL FROM: CDM	Ply: 1 Qty: 1	**Job Number:** 20-4682 Reddoch **Truss Label:** C03	Cust: R 215 JRef:1X1f2150003 T24 DrwNo: 358.20.1017.56397 / YK 12/23/2020

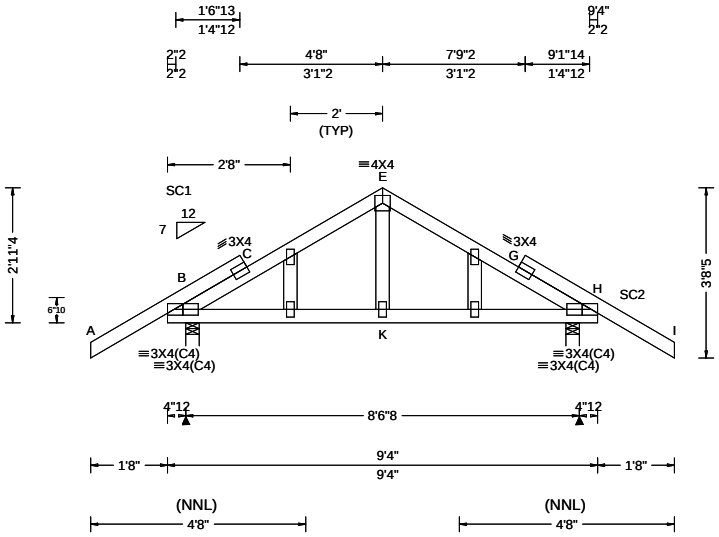

Loading Criteria (psf)

TCLL: 20.00
TCDL: 7.00
BCLL: 0.00
BCDL: 10.00
Des Ld: 37.00
NCBCLL: 10.00
Soffit: 2.00
Load Duration: 1.25
Spacing: 24.0 "

Wind Criteria

Wind Std: ASCE 7-10
Speed: 130 mph
Enclosure: Closed
Risk Category: II
EXP: C Kzt: NA
Mean Height: 15.00 ft
TCDL: 4.2 psf
BCDL: 5.0 psf
MWFRS Parallel Dist: 0 to h/2
C&C Dist a: 3.00 ft
Loc. from endwall: Any
GCpi: 0.18
Wind Duration: 1.60

Snow Criteria (Pg,Pf in PSF)

Pg: NA Ct: NA CAT: NA
Pf: NA Ce: NA
Lu: NA Cs: NA
Snow Duration: NA

Building Code:
FBC 2017 RES
TPI Std: 2014
Rep Fac: Varies by Ld Case
FT/RT:20(0)/10(0)
Plate Type(s):
WAVE

Defl/CSI Criteria

PP Deflection in	loc	L/defl	L/#
VERT(LL): 0.017	C	999	240
VERT(CL): 0.019	J	999	180
HORZ(LL): 0.012	C	-	-
HORZ(TL): 0.016	C	-	-

Creep Factor: 2.0
Max TC CSI: 0.544
Max BC CSI: 0.377
Max Web CSI: 0.059

VIEW Ver: 20.01.01A.0724.11

▲ Maximum Reactions (lbs)

Loc	Gravity R+	/ R-	/ Rh	Non-Gravity / Rw	/ U	/ RL
B	853	/-	/-	/475	/79	/99
H	853	/-	/-	/475	/79	/-

Wind reactions based on MWFRS
B Brg Width = 3.5 Min Req = 1.5
H Brg Width = 3.5 Min Req = 1.5
Bearings B & H are a rigid surface.
Members not listed have forces less than 375#

Maximum Top Chord Forces Per Ply (lbs)

Chords	Tens.	Comp.	Chords	Tens.	Comp.
B - C	1059	- 1530	E - G	38	- 480
C - E	100	- 480	G - H	923	- 1469

Maximum Bot Chord Forces Per Ply (lbs)

Chords	Tens.	Comp.	Chords	Tens.	Comp.
B - K	392	- 17	K - H	392	- 17

Lumber

Top chord: 2x4 SP #2;
Bot chord: 2x4 SP #2;
Webs: 2x4 SP #3;
Stack Chord: SC1 2x4 SP #2;
Stack Chord: SC2 2x4 SP #2;

Plating Notes

All plates are 2X4 except as noted.

Loading

Truss designed to support 2-0-0 top chord outlookers and cladding load not to exceed 2.30 PSF one face and 24.0" span opposite face. Top chord must not be cut or notched, unless specified otherwise.

Wind

Wind loads based on MWFRS with additional C&C member design.

Left and right cantilevers are exposed to wind

Additional Notes

See DWGS A14015ENC101014 & GBLLETIN0118 for gable wind bracing and other requirements.

Stacked top chord must NOT be notched or cut in area (NNL). Dropped top chord braced at 24" oc intervals. Attach stacked top chord (SC) to dropped top chord in notchable area using 3x4 tie-plates 24" oc. Center plate on stacked/dropped chord interface, plate length perpendicular to chord length. Splice top chord in notchable area using 3x6.

The overall height of this truss excluding overhang is 2-11-4.

FL REG# 278, Yoonhwak Kim, FL PE #86367
12/23/2020

****WARNING**** READ AND FOLLOW ALL NOTES ON THIS DRAWING!
****IMPORTANT**** FURNISH THIS DRAWING TO ALL CONTRACTORS INCLUDING THE INSTALLERS

Trusses require extreme care in fabricating, handling, shipping, installing and bracing. Refer to and follow the latest edition of BCSI (Building Component Safety Information, by TPI and SBCA) for safety practices prior to performing these functions. Installers shall provide temporary bracing per BCSI. Unless noted otherwise, top chord shall have properly attached structural sheathing and bottom chord shall have a properly attached rigid ceiling. Locations shown for permanent lateral restraint of webs shall have bracing installed per BCSI sections B3, B7, or B10, as applicable. Apply plates to each face of truss and position as shown above and on the Joint Details, unless noted otherwise. Refer to drawings 160A-Z for standard plate positions. Refer to job's General Notes page for additional information.

Alpine, a division of ITW Building Components Group Inc. shall not be responsible for any deviation from this drawing, any failure to build the truss in conformance with ANSI/TPI 1, or for handling, shipping, installation and bracing of trusses. A seal on this drawing or cover page listing this drawing, indicates acceptance of professional engineering responsibility solely for the design shown. The suitability and use of this drawing for any structure is the responsibility of the Building Designer per ANSI/TPI 1 Sec.2.

For more information see these web sites: Alpine: alpineitw.com; TPI: tpinst.org; SBCA: sbcindustry.com; ICC: iccsafe.org; AWC: awc.org

ALPINE AN ITW COMPANY
6750 Forum Drive
Suite 305
Orlando FL, 32821

SEQN: 394522 MONO FROM: CDM	Ply: 1 Qty: 1	**Job Number:** 20-4682 Reddoch **Truss Label:** C04	Cust: R 215 JRef:1X1f2150003 T47 DrwNo: 358.20.1017.57750 / YK 12/23/2020

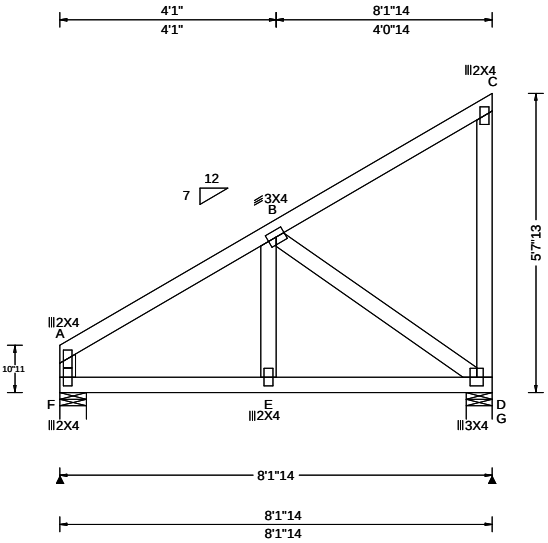

Loading Criteria (psf)

TCLL: 20.00
TCDL: 7.00
BCLL: 0.00
BCDL: 10.00
Des Ld: 37.00
NCBCLL: 10.00
Soffit: 2.00
Load Duration: 1.25
Spacing: 24.0 "

Wind Criteria

Wind Std: ASCE 7-10
Speed: 130 mph
Enclosure: Closed
Risk Category: II
EXP: C Kzt: NA
Mean Height: 15.00 ft
TCDL: 4.2 psf
BCDL: 5.0 psf
MWFRS Parallel Dist: h/2 to h
C&C Dist a: 3.00 ft
Loc. from endwall: not in 4.50 ft
GCpi: 0.18
Wind Duration: 1.60

Snow Criteria (Pg,Pf in PSF)

Pg: NA Ct: NA CAT: NA
Pf: NA Ce: NA
Lu: NA Cs: NA
Snow Duration: NA

Building Code:
FBC 2017 RES
TPI Std: 2014
Rep Fac: Yes
FT/RT:20(0)/10(0)
Plate Type(s):
WAVE

Defl/CSI Criteria

PP Deflection in	loc	L/defl	L/#
VERT(LL): 0.035	E	999	240
VERT(CL): 0.066	E	999	180
HORZ(LL): -0.040	C	-	-
HORZ(TL): 0.077	C	-	-

Creep Factor: 2.0
Max TC CSI: 0.233
Max BC CSI: 0.220
Max Web CSI: 0.332

VIEW Ver: 20.01.01A.0724.11

▲Maximum Reactions (lbs)

	Gravity			Non-Gravity		
Loc	R+	/ R-	/ Rh	/ Rw	/ U	/ RL
F	311	/-	/-	/190	/13	/135
G	311	/-	/-	/213	/113	/-

Wind reactions based on MWFRS
F Brg Width = 6.0 Min Req = 1.5
G Brg Width = 5.9 Min Req = 1.5
Bearings F & G are a rigid surface.
Members not listed have forces less than 375#

Lumber

Top chord: 2x4 SP #2;
Bot chord: 2x4 SP #2;
Webs: 2x4 SP #3;

Wind

Wind loads based on MWFRS with additional C&C member design.

End verticals not exposed to wind pressure.

Additional Notes

The overall height of this truss excluding overhang is 5-7-13.

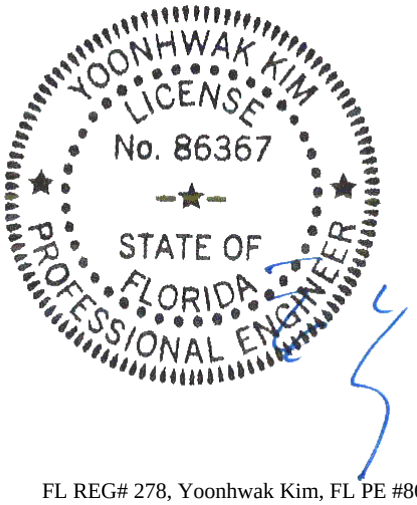

FL REG# 278, Yoonhwak Kim, FL PE #86367
12/23/2020

****WARNING**** READ AND FOLLOW ALL NOTES ON THIS DRAWING!
****IMPORTANT**** FURNISH THIS DRAWING TO ALL CONTRACTORS INCLUDING THE INSTALLERS

Trusses require extreme care in fabricating, handling, shipping, installing and bracing. Refer to and follow the latest edition of BCSI (Building Component Safety Information, by TPI and SBCA) for safety practices prior to performing these functions. Installers shall provide temporary bracing per BCSI. Unless noted otherwise, top chord shall have properly attached structural sheathing and bottom chord shall have a properly attached rigid ceiling. Locations shown for permanent lateral restraint of webs shall have bracing installed per BCSI sections B3, B7, or B10, as applicable. Apply plates to each face of truss and position as shown above and on the Joint Details, unless noted otherwise. Refer to drawings 160A-Z for standard plate positions. Refer to job's General Notes page for additional information.

Alpine, a division of ITW Building Components Group Inc. shall not be responsible for any deviation from this drawing, any failure to build the truss in conformance with ANSI/TPI 1, or for handling, shipping, installation and bracing of trusses. A seal on this drawing or cover page listing this drawing, indicates acceptance of professional engineering responsibility solely for the design shown. The suitability and use of this drawing for any structure is the responsibility of the Building Designer per ANSI/TPI 1 Sec.2.

For more information see these web sites: Alpine: alpineitw.com; TPI: tpinst.org; SBCA: sbcindustry.com; ICC: iccsafe.org; AWC: awc.org

ALPINE AN ITW COMPANY
6750 Forum Drive
Suite 305
Orlando FL, 32821

SEQN: 394523 COMN FROM: CDM	Ply: 1 Qty: 3	**Job Number:** 20-4682 Reddoch **Truss Label:** D01	Cust: R 215 JRef:1X1f2150003 T55 DrwNo: 358.20.1017.59563 / YK 12/23/2020

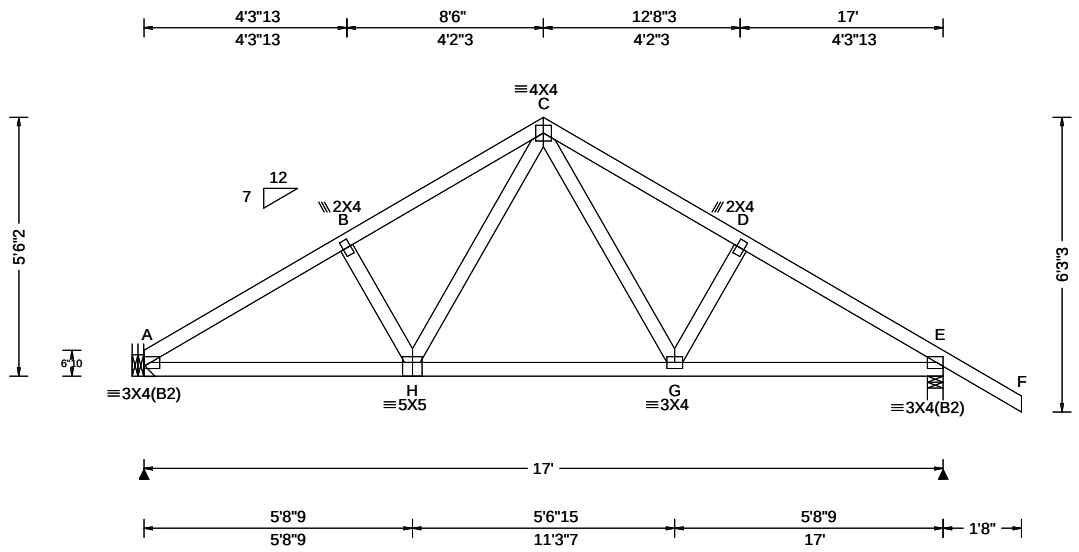

Loading Criteria (psf)

TCLL:	20.00
TCDL:	7.00
BCLL:	0.00
BCDL:	10.00
Des Ld:	37.00
NCBCLL:	10.00
Soffit:	2.00

Load Duration: 1.25
Spacing: 24.0 "

Wind Criteria
Wind Std: ASCE 7-10
Speed: 130 mph
Enclosure: Closed
Risk Category: II
EXP: C Kzt: NA
Mean Height: 15.00 ft
TCDL: 4.2 psf
BCDL: 5.0 psf
MWFRS Parallel Dist: > 2h
C&C Dist a: 3.00 ft
Loc. from endwall: not in 9.00 ft
GCpi: 0.18
Wind Duration: 1.60

Snow Criteria (Pg,Pf in PSF)
Pg: NA Ct: NA CAT: NA
Pf: NA Ce: NA
Lu: NA Cs: NA
Snow Duration: NA

Building Code:
FBC 2017 RES
TPI Std: 2014
Rep Fac: Yes
FT/RT:20(0)/10(0)
Plate Type(s):
WAVE

Defl/CSI Criteria

PP Deflection in	loc	L/defl	L/#
VERT(LL): 0.031	G	999	240
VERT(CL): 0.058	G	999	180
HORZ(LL): 0.016	G	-	-
HORZ(TL): 0.030	G	-	-

Creep Factor: 2.0
Max TC CSI: 0.353
Max BC CSI: 0.366
Max Web CSI: 0.116

VIEW Ver: 20.01.01A.0724.11

▲Maximum Reactions (lbs)

Loc	Gravity R+	/ R-	/ Rh	Non-Gravity / Rw	/ U	/ RL
A	642	/-	/-	/346	/11	/157
E	755	/-	/-	/431	/30	/-

Wind reactions based on MWFRS
A Brg Width = - Min Req = -
E Brg Width = 4.0 Min Req = 1.5
Bearing E is a rigid surface.
Members not listed have forces less than 375#

Maximum Top Chord Forces Per Ply (lbs)

Chords	Tens.	Comp.	Chords	Tens.	Comp.
A - B	259	- 939	C - D	267	- 810
B - C	284	- 827	D - E	242	- 923

Maximum Bot Chord Forces Per Ply (lbs)

Chords	Tens.	Comp.	Chords	Tens.	Comp.
A - H	754	- 142	G - E	731	- 132
H - G	520	- 38			

Lumber

Top chord: 2x4 SP #2;
Bot chord: 2x4 SP #2;
Webs: 2x4 SP #3;

Wind

Wind loads based on MWFRS with additional C&C member design.

Additional Notes

The overall height of this truss excluding overhang is 5-6-2.

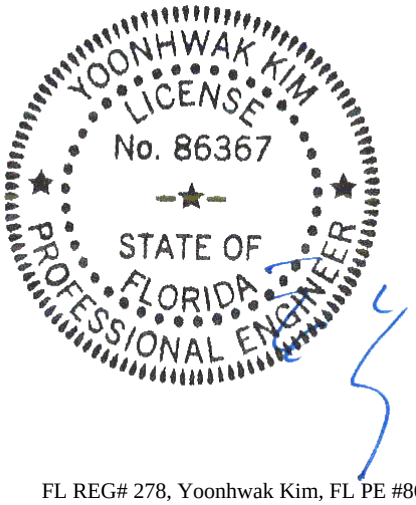

FL REG# 278, Yoonhwak Kim, FL PE #86367
12/23/2020

****WARNING**** READ AND FOLLOW ALL NOTES ON THIS DRAWING!
****IMPORTANT**** FURNISH THIS DRAWING TO ALL CONTRACTORS INCLUDING THE INSTALLERS

Trusses require extreme care in fabricating, handling, shipping, installing and bracing. Refer to and follow the latest edition of BCSI (Building Component Safety Information, by TPI and SBCA) for safety practices prior to performing these functions. Installers shall provide temporary bracing per BCSI. Unless noted otherwise, top chord shall have properly attached structural sheathing and bottom chord shall have a properly attached rigid ceiling. Locations shown for permanent lateral restraint of webs shall have bracing installed per BCSI sections B3, B7, or B10, as applicable. Apply plates to each face of truss and position as shown above and on the Joint Details, unless noted otherwise. Refer to drawings 160A-Z for standard plate positions. Refer to job's General Notes page for additional information.

Alpine, a division of ITW Building Components Group Inc. shall not be responsible for any deviation from this drawing, any failure to build the truss in conformance with ANSI/TPI 1, or for handling, shipping, installation and bracing of trusses. A seal on this drawing or cover page listing this drawing, indicates acceptance of professional engineering responsibility solely for the design shown. The suitability and use of this drawing for any structure is the responsibility of the Building Designer per ANSI/TPI 1 Sec.2.

For more information see these web sites: Alpine: alpineitw.com; TPI: tpinst.org; SBCA: sbcindustry.com; ICC: iccsafe.org; AWC: awc.org

ALPINE AN ITW COMPANY
6750 Forum Drive
Suite 305
Orlando FL, 32821

SEQN: 394538 HIP_ FROM: CDM	Ply: 1 Qty: 4	**Job Number:** 20-4682 Reddoch **Truss Label:** HJ1	Cust: R 215 JRef:1X1f2150003 T27 DrwNo: 358.20.1018.07023 / YK 12/23/2020

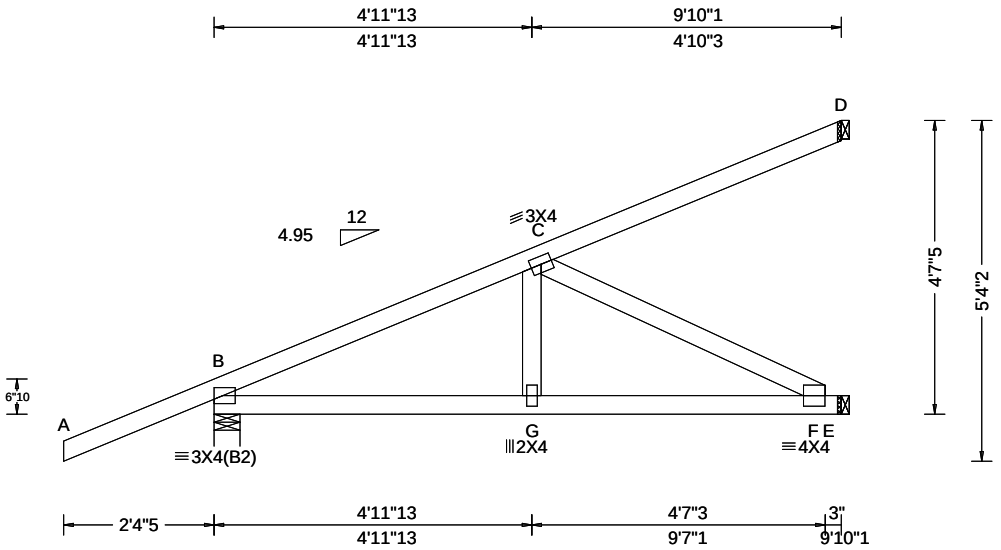

Loading Criteria (psf)	**Wind Criteria**	**Snow Criteria** (Pg,Pf in PSF)	**Defl/CSI Criteria**
TCLL: 20.00 TCDL: 7.00 BCLL: 0.00 BCDL: 10.00 Des Ld: 37.00 NCBCLL: 10.00 Soffit: 2.00 Load Duration: 1.25 Spacing: 24.0 "	Wind Std: ASCE 7-10 Speed: 130 mph Enclosure: Closed Risk Category: II EXP: C Kzt: NA Mean Height: 15.00 ft TCDL: 4.2 psf BCDL: 5.0 psf MWFRS Parallel Dist: 0 to h/2 C&C Dist a: 3.00 ft Loc. from endwall: not in 4.50 ft GCpi: 0.18 Wind Duration: 1.60	Pg: NA Ct: NA CAT: NA Pf: NA Ce: NA Lu: NA Cs: NA Snow Duration: NA Building Code: FBC 2017 RES TPI Std: 2014 Rep Fac: Varies by Ld Case FT/RT:20(0)/10(0) Plate Type(s): WAVE	PP Deflection in loc L/defl L/# VERT(LL): 0.026 G 999 240 VERT(CL): 0.048 G 999 180 HORZ(LL): -0.008 D - - HORZ(TL): 0.014 D - - Creep Factor: 2.0 Max TC CSI: 0.651 Max BC CSI: 0.684 Max Web CSI: 0.314 VIEW Ver: 20.01.01A.0724.11

▲Maximum Reactions (lbs)

	Gravity			Non-Gravity		
Loc	R+	/ R-	/ Rh	/ Rw	/ U	/ RL
B	327	/-	/-	/-	/217	/-
E	320	/-	/-	/-	/86	/-
D	84	/-	/-	/-	/29	/-

Wind reactions based on MWFRS
B Brg Width = 4.9 Min Req = 1.5
E Brg Width = 1.5 Min Req = -
D Brg Width = 1.5 Min Req = -
Bearing B is a rigid surface.
Members not listed have forces less than 375#

Maximum Top Chord Forces Per Ply (lbs)

Chords	Tens.	Comp.
B - C	235	- 572

Maximum Bot Chord Forces Per Ply (lbs)

Chords	Tens.	Comp.	Chords	Tens.	Comp.
B - G	530	- 185	G - F	521	- 185

Maximum Web Forces Per Ply (lbs)

Webs	Tens.	Comp.
C - F	208	- 587

Lumber

Top chord: 2x4 SP #2;
Bot chord: 2x4 SP #2;
Webs: 2x4 SP #3;

Special Loads

------(Lumber Dur.Fac.=1.25 / Plate Dur.Fac.=1.25)

TC: From	-0 plf at	-2.36 to	55 plf at	0.00
TC: From	2 plf at	0.00 to	2 plf at	9.84
BC: From	0 plf at	-2.36 to	4 plf at	0.00
BC: From	2 plf at	0.00 to	2 plf at	9.84

TC: -42 lb Conc. Load at 1.38
TC: 111 lb Conc. Load at 4.21
TC: 236 lb Conc. Load at 7.03
BC: 24 lb Conc. Load at 1.38
BC: 107 lb Conc. Load at 4.21
BC: 185 lb Conc. Load at 7.03

Wind

Wind loads and reactions based on MWFRS.

Additional Notes

The overall height of this truss excluding overhang is 4-7-5.

Provide (3) 16d common 0.162"x3.5", toe-nails at TC.
Provide (3) 16d common 0.162"x3.5", toe-nails at BC.

YOONHWAK KIM
LICENSE
No. 86367
STATE OF
FLORIDA
PROFESSIONAL ENGINEER

FL REG# 278, Yoonhwak Kim, FL PE #86367
12/23/2020

****WARNING**** READ AND FOLLOW ALL NOTES ON THIS DRAWING!
****IMPORTANT**** FURNISH THIS DRAWING TO ALL CONTRACTORS INCLUDING THE INSTALLERS

Trusses require extreme care in fabricating, handling, shipping, installing and bracing. Refer to and follow the latest edition of BCSI (Building Component Safety Information, by TPI and SBCA) for safety practices prior to performing these functions. Installers shall provide temporary bracing per BCSI. Unless noted otherwise, top chord shall have properly attached structural sheathing and bottom chord shall have a properly attached rigid ceiling. Locations shown for permanent lateral restraint of webs shall have bracing installed per BCSI sections B3, B7, or B10, as applicable. Apply plates to each face of truss and position as shown above and on the Joint Details, unless noted otherwise. Refer to drawings 160A-Z for standard plate positions. Refer to job's General Notes page for additional information.

Alpine, a division of ITW Building Components Group Inc. shall not be responsible for any deviation from this drawing, any failure to build the truss in conformance with ANSI/TPI 1, or for handling, shipping, installation and bracing of trusses. A seal on this drawing or cover page listing this drawing, indicates acceptance of professional engineering responsibility solely for the design shown. The suitability and use of this drawing for any structure is the responsibility of the Building Designer per ANSI/TPI 1 Sec.2.

For more information see these web sites: Alpine: alpineitw.com; TPI: tpinst.org; SBCA: sbcindustry.com; ICC: iccsafe.org; AWC: awc.org

ALPINE
AN ITW COMPANY
6750 Forum Drive
Suite 305
Orlando FL, 32821

SEQN: 394524 JACK FROM: CDM	Ply: 1 Qty: 8	**Job Number:** 20-4682 Reddoch **Truss Label:** J1	Cust: R 215 JRef:1X1f2150003 T39 DrwNo: 358.20.1018.08757 / YK 12/23/2020

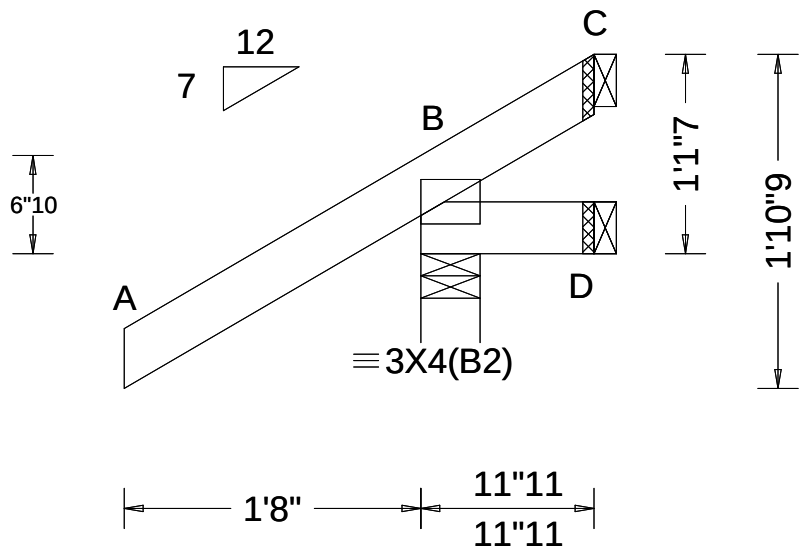

Loading Criteria (psf)	**Wind Criteria**	**Snow Criteria** (Pg,Pf in PSF)	**Defl/CSI Criteria**
TCLL: 20.00 TCDL: 7.00 BCLL: 0.00 BCDL: 10.00 Des Ld: 37.00 NCBCLL: 10.00 Soffit: 2.00 Load Duration: 1.25 Spacing: 24.0 "	Wind Std: ASCE 7-10 Speed: 130 mph Enclosure: Closed Risk Category: II EXP: C Kzt: NA Mean Height: 15.00 ft TCDL: 4.2 psf BCDL: 5.0 psf MWFRS Parallel Dist: 0 to h/2 C&C Dist a: 3.00 ft Loc. from endwall: Any GCpi: 0.18 Wind Duration: 1.60	Pg: NA Ct: NA CAT: NA Pf: NA Ce: NA Lu: NA Cs: NA Snow Duration: NA Building Code: FBC 2017 RES TPI Std: 2014 Rep Fac: Yes FT/RT:20(0)/10(0) Plate Type(s): WAVE	PP Deflection in loc L/defl L/# VERT(LL): NA VERT(CL): NA HORZ(LL): -0.001 C - - HORZ(TL): 0.002 C - - Creep Factor: 2.0 Max TC CSI: 0.221 Max BC CSI: 0.029 Max Web CSI: 0.000 VIEW Ver: 20.01.01A.0724.11

▲Maximum Reactions (lbs)

	Gravity			Non-Gravity		
Loc	R+	/ R-	/ Rh	/ Rw	/ U	/ RL
B	242	/-	/-	/190	/74	/43
D	12	/-8	/-	/17	/11	/-
C	-	/-59	/-	/36	/60	/-

Wind reactions based on MWFRS
B Brg Width = 4.0 Min Req = 1.5
D Brg Width = 1.5 Min Req = -
C Brg Width = 1.5 Min Req = -
Bearing B is a rigid surface.
Members not listed have forces less than 375#

Lumber

Top chord: 2x4 SP #2;
Bot chord: 2x4 SP #2;

Wind

Wind loads based on MWFRS with additional C&C member design.

Additional Notes

The overall height of this truss excluding overhang is 1-1-7.

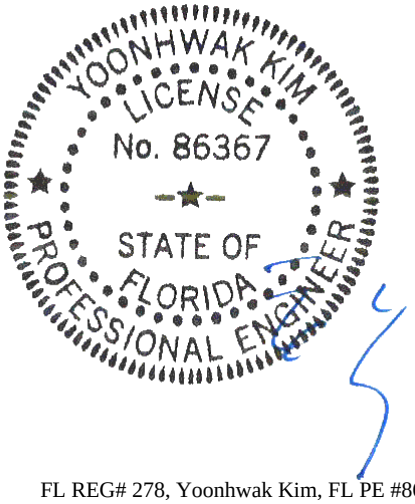

FL REG# 278, Yoonhwak Kim, FL PE #86367
12/23/2020

****WARNING**** READ AND FOLLOW ALL NOTES ON THIS DRAWING!
****IMPORTANT**** FURNISH THIS DRAWING TO ALL CONTRACTORS INCLUDING THE INSTALLERS

Trusses require extreme care in fabricating, handling, shipping, installing and bracing. Refer to and follow the latest edition of BCSI (Building Component Safety Information, by TPI and SBCA) for safety practices prior to performing these functions. Installers shall provide temporary bracing per BCSI. Unless noted otherwise, top chord shall have properly attached structural sheathing and bottom chord shall have a properly attached rigid ceiling. Locations shown for permanent lateral restraint of webs shall have bracing installed per BCSI sections B3, B7, or B10, as applicable. Apply plates to each face of truss and position as shown above and on the Joint Details, unless noted otherwise. Refer to drawings 160A-Z for standard plate positions. Refer to job's General Notes page for additional information.

Alpine, a division of ITW Building Components Group Inc. shall not be responsible for any deviation from this drawing, any failure to build the truss in conformance with ANSI/TPI 1, or for handling, shipping, installation and bracing of trusses. A seal on this drawing or cover page listing this drawing, indicates acceptance of professional engineering responsibility solely for the design shown. The suitability and use of this drawing for any structure is the responsibility of the Building Designer per ANSI/TPI 1 Sec.2.

For more information see these web sites: Alpine: alpineitw.com; TPI: tpinst.org; SBCA: sbcindustry.com; ICC: iccsafe.org; AWC: awc.org

ALPINE AN ITW COMPANY
6750 Forum Drive
Suite 305
Orlando FL, 32821

SEQN: 394525 JACK FROM: CDM	Ply: 1 Qty: 8	**Job Number:** 20-4682 Reddoch **Truss Label:** J3	Cust: R 215 JRef:1X1f2150003 T41 DrwNo: 358.20.1018.10000 / YK 12/23/2020

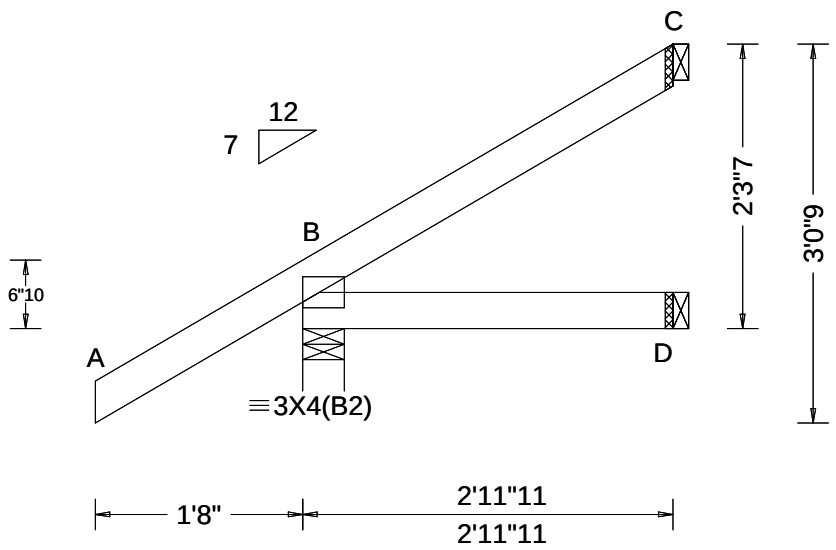

Loading Criteria (psf)	**Wind Criteria**	**Snow Criteria** (Pg,Pf in PSF)	**Defl/CSI Criteria**
TCLL: 20.00 TCDL: 7.00 BCLL: 0.00 BCDL: 10.00 Des Ld: 37.00 NCBCLL: 10.00 Soffit: 2.00 Load Duration: 1.25 Spacing: 24.0 "	Wind Std: ASCE 7-10 Speed: 130 mph Enclosure: Closed Risk Category: II EXP: C Kzt: NA Mean Height: 15.00 ft TCDL: 4.2 psf BCDL: 5.0 psf MWFRS Parallel Dist: 0 to h/2 C&C Dist a: 3.00 ft Loc. from endwall: not in 4.50 ft GCpi: 0.18 Wind Duration: 1.60	Pg: NA Ct: NA CAT: NA Pf: NA Ce: NA Lu: NA Cs: NA Snow Duration: NA Building Code: FBC 2017 RES TPI Std: 2014 Rep Fac: Yes FT/RT:20(0)/10(0) Plate Type(s): WAVE	PP Deflection in loc L/defl L/# VERT(LL): NA VERT(CL): NA HORZ(LL): -0.001 C - - HORZ(TL): 0.001 C - - Creep Factor: 2.0 Max TC CSI: 0.221 Max BC CSI: 0.089 Max Web CSI: 0.000 VIEW Ver: 20.01.01A.0724.11

▲Maximum Reactions (lbs)

	Gravity			Non-Gravity		
Loc	R+	/ R-	/ Rh	/ Rw	/ U	/ RL
B	249	/-	/-	/177	/47	/76
D	54	/-	/-	/40	/-	/-
C	55	/-	/-	/20	/32	/-

Wind reactions based on MWFRS
B Brg Width = 4.0 Min Req = 1.5
D Brg Width = 1.5 Min Req = -
C Brg Width = 1.5 Min Req = -
Bearing B is a rigid surface.
Members not listed have forces less than 375#

Lumber

Top chord: 2x4 SP #2;
Bot chord: 2x4 SP #2;

Wind

Wind loads based on MWFRS with additional C&C member design.

Additional Notes

The overall height of this truss excluding overhang is 2-3-7.

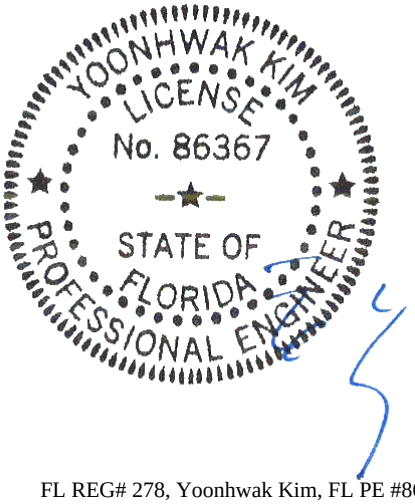

FL REG# 278, Yoonhwak Kim, FL PE #86367
12/23/2020

****WARNING**** READ AND FOLLOW ALL NOTES ON THIS DRAWING!
****IMPORTANT**** FURNISH THIS DRAWING TO ALL CONTRACTORS INCLUDING THE INSTALLERS

Trusses require extreme care in fabricating, handling, shipping, installing and bracing. Refer to and follow the latest edition of BCSI (Building Component Safety Information, by TPI and SBCA) for safety practices prior to performing these functions. Installers shall provide temporary bracing per BCSI. Unless noted otherwise, top chord shall have properly attached structural sheathing and bottom chord shall have a properly attached rigid ceiling. Locations shown for permanent lateral restraint of webs shall have bracing installed per BCSI sections B3, B7, or B10, as applicable. Apply plates to each face of truss and position as shown above and on the Joint Details, unless noted otherwise. Refer to drawings 160A-Z for standard plate positions. Refer to job's General Notes page for additional information.

Alpine, a division of ITW Building Components Group Inc. shall not be responsible for any deviation from this drawing, any failure to build the truss in conformance with ANSI/TPI 1, or for handling, shipping, installation and bracing of trusses. A seal on this drawing or cover page listing this drawing, indicates acceptance of professional engineering responsibility solely for the design shown. The suitability and use of this drawing for any structure is the responsibility of the Building Designer per ANSI/TPI 1 Sec.2.

For more information see these web sites: Alpine: alpineitw.com; TPI: tpinst.org; SBCA: sbcindustry.com; ICC: iccsafe.org; AWC: awc.org

ALPINE AN ITW COMPANY
6750 Forum Drive
Suite 305
Orlando FL, 32821

SEQN: 394526 JACK FROM: CDM	Ply: 1 Qty: 8	**Job Number:** 20-4682 Reddoch **Truss Label:** J5	Cust: R 215 JRef:1X1f2150003 T8 DrwNo: 358.20.1018.11233 / YK 12/23/2020

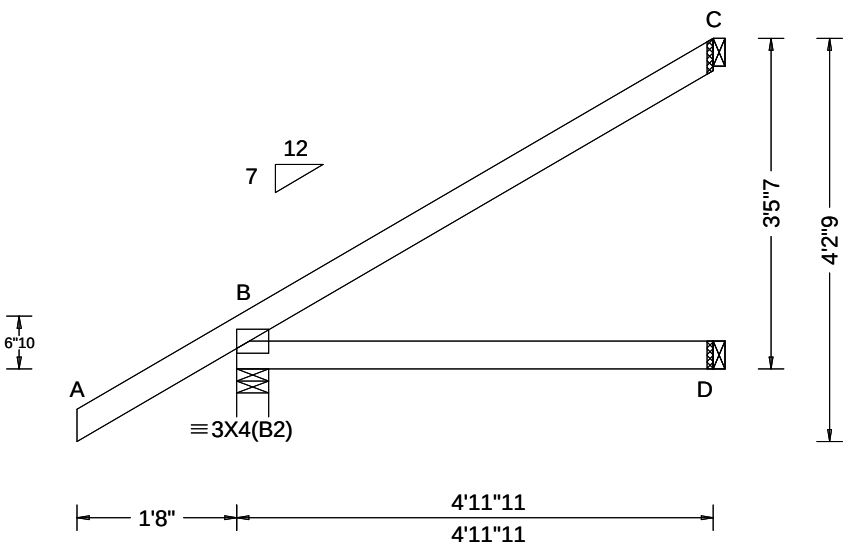

Loading Criteria (psf)	**Wind Criteria**	**Snow Criteria** (Pg,Pf in PSF)	**Defl/CSI Criteria**
TCLL: 20.00 TCDL: 7.00 BCLL: 0.00 BCDL: 10.00 Des Ld: 37.00 NCBCLL: 10.00 Soffit: 2.00 Load Duration: 1.25 Spacing: 24.0 "	Wind Std: ASCE 7-10 Speed: 130 mph Enclosure: Closed Risk Category: II EXP: C Kzt: NA Mean Height: 15.00 ft TCDL: 4.2 psf BCDL: 5.0 psf MWFRS Parallel Dist: 0 to h/2 C&C Dist a: 3.00 ft Loc. from endwall: not in 4.50 ft GCpi: 0.18 Wind Duration: 1.60	Pg: NA Ct: NA CAT: NA Pf: NA Ce: NA Lu: NA Cs: NA Snow Duration: NA Building Code: FBC 2017 RES TPI Std: 2014 Rep Fac: Yes FT/RT:20(0)/10(0) Plate Type(s): WAVE	PP Deflection in loc L/defl L/# VERT(LL): NA VERT(CL): NA HORZ(LL): 0.003 D - - HORZ(TL): 0.005 D - - Creep Factor: 2.0 Max TC CSI: 0.307 Max BC CSI: 0.265 Max Web CSI: 0.000 VIEW Ver: 20.01.01A.0724.11

▲Maximum Reactions (lbs)

	Gravity			Non-Gravity		
Loc	R+	/ R-	/ Rh	/ Rw	/ U	/ RL
B	312	/-	/-	/214	/48	/110
D	93	/-	/-	/64	/-	/-
C	118	/-	/-	/51	/62	/-

Wind reactions based on MWFRS
B Brg Width = 4.0 Min Req = 1.5
D Brg Width = 1.5 Min Req = -
C Brg Width = 1.5 Min Req = -
Bearing B is a rigid surface.
Members not listed have forces less than 375#

Lumber

Top chord: 2x4 SP #2;
Bot chord: 2x4 SP #2;

Wind

Wind loads based on MWFRS with additional C&C member design.

Additional Notes

The overall height of this truss excluding overhang is 3-5-7.

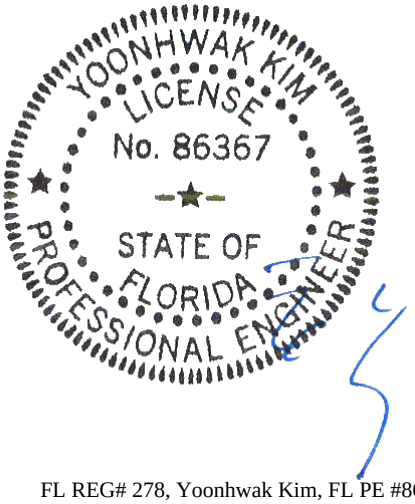

FL REG# 278, Yoonhwak Kim, FL PE #86367
12/23/2020

****WARNING**** READ AND FOLLOW ALL NOTES ON THIS DRAWING!
****IMPORTANT**** FURNISH THIS DRAWING TO ALL CONTRACTORS INCLUDING THE INSTALLERS

Trusses require extreme care in fabricating, handling, shipping, installing and bracing. Refer to and follow the latest edition of BCSI (Building Component Safety Information, by TPI and SBCA) for safety practices prior to performing these functions. Installers shall provide temporary bracing per BCSI. Unless noted otherwise, top chord shall have properly attached structural sheathing and bottom chord shall have a properly attached rigid ceiling. Locations shown for permanent lateral restraint of webs shall have bracing installed per BCSI sections B3, B7, or B10, as applicable. Apply plates to each face of truss and position as shown above and on the Joint Details, unless noted otherwise. Refer to drawings 160A-Z for standard plate positions. Refer to job's General Notes page for additional information.

Alpine, a division of ITW Building Components Group Inc. shall not be responsible for any deviation from this drawing, any failure to build the truss in conformance with ANSI/TPI 1, or for handling, shipping, installation and bracing of trusses. A seal on this drawing or cover page listing this drawing, indicates acceptance of professional engineering responsibility solely for the design shown. The suitability and use of this drawing for any structure is the responsibility of the Building Designer per ANSI/TPI 1 Sec.2.

For more information see these web sites: Alpine: alpineitw.com; TPI: tpinst.org; SBCA: sbcindustry.com; ICC: iccsafe.org; AWC: awc.org

ALPINE AN ITW COMPANY
6750 Forum Drive
Suite 305
Orlando FL, 32821

SEQN: 394527 EJAC FROM: CDM	Ply: 1 Qty: 30	**Job Number:** 20-4682 Reddoch **Truss Label:** J7	Cust: R 215 JRef:1X1f2150003 T10 DrwNo: 358.20.1018.12377 / YK 12/23/2020

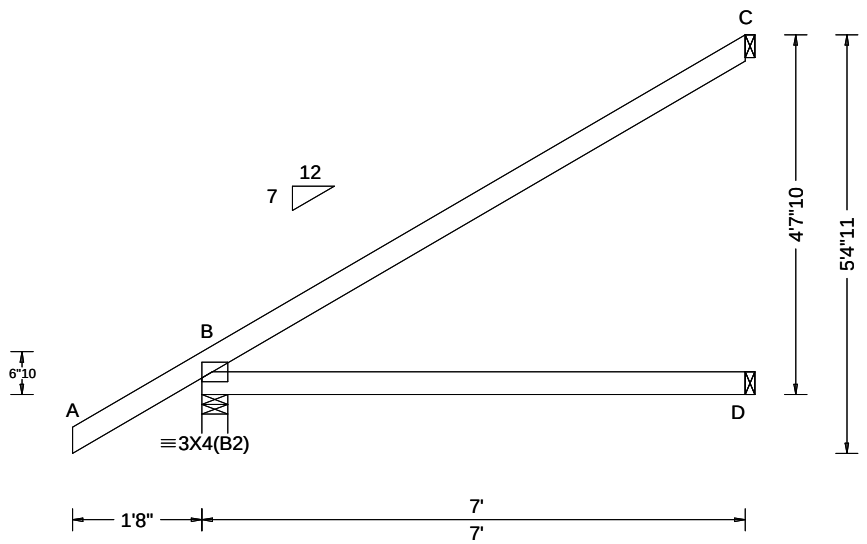

Loading Criteria (psf)	**Wind Criteria**	**Snow Criteria** (Pg,Pf in PSF)	**Defl/CSI Criteria**
TCLL: 20.00 TCDL: 7.00 BCLL: 0.00 BCDL: 10.00 Des Ld: 37.00 NCBCLL: 10.00 Soffit: 2.00 Load Duration: 1.25 Spacing: 24.0 "	Wind Std: ASCE 7-10 Speed: 130 mph Enclosure: Closed Risk Category: II EXP: C Kzt: NA Mean Height: 15.00 ft TCDL: 4.2 psf BCDL: 5.0 psf MWFRS Parallel Dist: h/2 to h C&C Dist a: 3.00 ft Loc. from endwall: not in 4.50 ft GCpi: 0.18 Wind Duration: 1.60	Pg: NA Ct: NA CAT: NA Pf: NA Ce: NA Lu: NA Cs: NA Snow Duration: NA Building Code: FBC 2017 RES TPI Std: 2014 Rep Fac: Yes FT/RT:20(0)/10(0) Plate Type(s): WAVE	PP Deflection in loc L/defl L/# VERT(LL): NA VERT(CL): NA HORZ(LL): 0.011 D - - HORZ(TL): 0.019 D - - Creep Factor: 2.0 Max TC CSI: 0.672 Max BC CSI: 0.534 Max Web CSI: 0.000 VIEW Ver: 20.01.01A.0724.11

▲Maximum Reactions (lbs)

	Gravity			Non-Gravity		
Loc	R+	/ R-	/ Rh	/ Rw	/ U	/ RL
B	384	/-	/-	/257	/52	/144
D	131	/-	/-	/89	/-	/-
C	175	/-	/-	/79	/88	/-

Wind reactions based on MWFRS
B Brg Width = 4.0 Min Req = 1.5
D Brg Width = 1.5 Min Req = -
C Brg Width = 1.5 Min Req = -
Bearing B is a rigid surface.
Members not listed have forces less than 375#

Lumber

Top chord: 2x4 SP #2;
Bot chord: 2x4 SP #2;

Wind

Wind loads based on MWFRS with additional C&C member design.

Additional Notes

The overall height of this truss excluding overhang is 4-7-10.

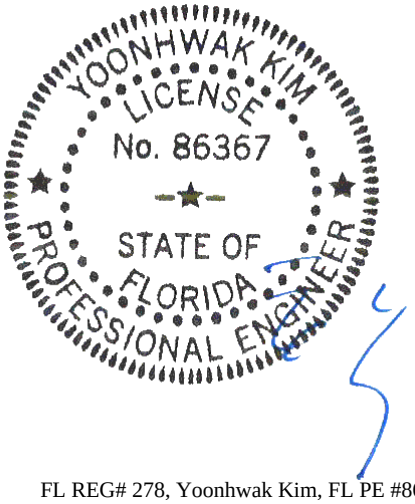

FL REG# 278, Yoonhwak Kim, FL PE #86367
12/23/2020

****WARNING**** READ AND FOLLOW ALL NOTES ON THIS DRAWING!
****IMPORTANT**** FURNISH THIS DRAWING TO ALL CONTRACTORS INCLUDING THE INSTALLERS

Trusses require extreme care in fabricating, handling, shipping, installing and bracing. Refer to and follow the latest edition of BCSI (Building Component Safety Information, by TPI and SBCA) for safety practices prior to performing these functions. Installers shall provide temporary bracing per BCSI. Unless noted otherwise, top chord shall have properly attached structural sheathing and bottom chord shall have a properly attached rigid ceiling. Locations shown for permanent lateral restraint of webs shall have bracing installed per BCSI sections B3, B7, or B10, as applicable. Apply plates to each face of truss and position as shown above and on the Joint Details, unless noted otherwise. Refer to drawings 160A-Z for standard plate positions. Refer to job's General Notes page for additional information.

Alpine, a division of ITW Building Components Group Inc. shall not be responsible for any deviation from this drawing, any failure to build the truss in conformance with ANSI/TPI 1, or for handling, shipping, installation and bracing of trusses. A seal on this drawing or cover page listing this drawing, indicates acceptance of professional engineering responsibility solely for the design shown. The suitability and use of this drawing for any structure is the responsibility of the Building Designer per ANSI/TPI 1 Sec.2.

For more information see these web sites: Alpine: alpineitw.com; TPI: tpinst.org; SBCA: sbcindustry.com; ICC: iccsafe.org; AWC: awc.org

ALPINE AN ITW COMPANY
6750 Forum Drive
Suite 305
Orlando FL, 32821

SEQN: 394528 EJAC FROM: CDM	Ply: 1 Qty: 1	**Job Number:** 20-4682 Reddoch **Truss Label:** J7A	Cust: R 215 JRef:1X1f2150003 T40 DrwNo: 358.20.1018.13590 / YK 12/23/2020

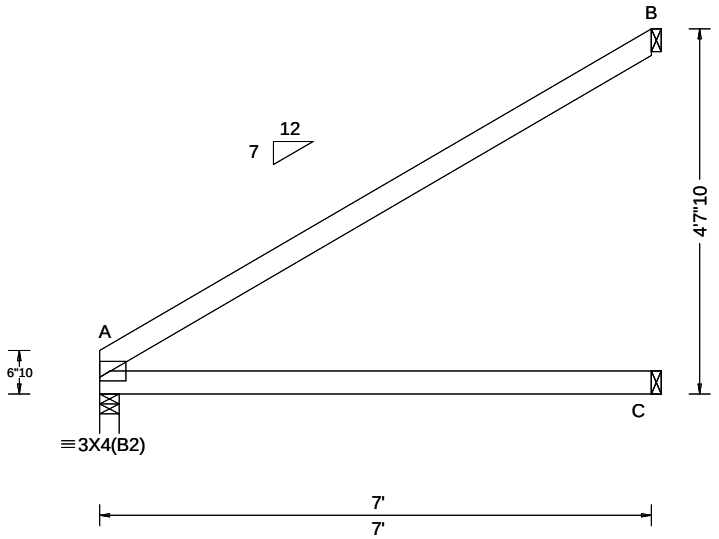

Loading Criteria (psf)	**Wind Criteria**	**Snow Criteria** (Pg,Pf in PSF)	**Defl/CSI Criteria**
TCLL: 20.00 TCDL: 7.00 BCLL: 0.00 BCDL: 10.00 Des Ld: 37.00 NCBCLL: 10.00 Soffit: 2.00 Load Duration: 1.25 Spacing: 24.0 "	Wind Std: ASCE 7-10 Speed: 130 mph Enclosure: Closed Risk Category: II EXP: C Kzt: NA Mean Height: 15.00 ft TCDL: 4.2 psf BCDL: 5.0 psf MWFRS Parallel Dist: h to 2h C&C Dist a: 3.00 ft Loc. from endwall: not in 9.00 ft GCpi: 0.18 Wind Duration: 1.60	Pg: NA Ct: NA CAT: NA Pf: NA Ce: NA Lu: NA Cs: NA Snow Duration: NA Building Code: FBC 2017 RES TPI Std: 2014 Rep Fac: Yes FT/RT:20(0)/10(0) Plate Type(s): WAVE	PP Deflection in loc L/defl L/# VERT(LL): NA VERT(CL): NA HORZ(LL): 0.013 C - - HORZ(TL): 0.025 C - - Creep Factor: 2.0 Max TC CSI: 0.737 Max BC CSI: 0.548 Max Web CSI: 0.000 VIEW Ver: 20.01.01A.0724.11

▲Maximum Reactions (lbs)

	Gravity			Non-Gravity		
Loc	R+	/ R-	/ Rh	/ Rw	/ U	/ RL
A	269	/-	/-	/166	/-	/77
C	133	/-	/-	/94	/-	/-
B	183	/-	/-	/86	/50	/-

Wind reactions based on MWFRS
A Brg Width = 3.0 Min Req = 1.5
C Brg Width = 1.5 Min Req = -
B Brg Width = 1.5 Min Req = -
Bearing A is a rigid surface.
Members not listed have forces less than 375#

Lumber

Top chord: 2x4 SP #2;
Bot chord: 2x4 SP #2;

Wind

Wind loads based on MWFRS with additional C&C member design.

Additional Notes

The overall height of this truss excluding overhang is 4-7-10.

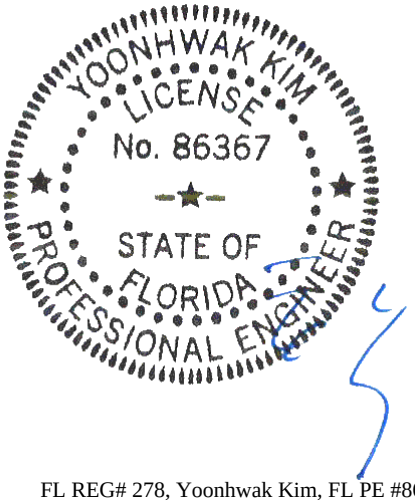

FL REG# 278, Yoonhwak Kim, FL PE #86367
12/23/2020

****WARNING**** READ AND FOLLOW ALL NOTES ON THIS DRAWING!
****IMPORTANT**** FURNISH THIS DRAWING TO ALL CONTRACTORS INCLUDING THE INSTALLERS

Trusses require extreme care in fabricating, handling, shipping, installing and bracing. Refer to and follow the latest edition of BCSI (Building Component Safety Information, by TPI and SBCA) for safety practices prior to performing these functions. Installers shall provide temporary bracing per BCSI. Unless noted otherwise, top chord shall have properly attached structural sheathing and bottom chord shall have a properly attached rigid ceiling. Locations shown for permanent lateral restraint of webs shall have bracing installed per BCSI sections B3, B7, or B10, as applicable. Apply plates to each face of truss and position as shown above and on the Joint Details, unless noted otherwise. Refer to drawings 160A-Z for standard plate positions. Refer to job's General Notes page for additional information.

Alpine, a division of ITW Building Components Group Inc. shall not be responsible for any deviation from this drawing, any failure to build the truss in conformance with ANSI/TPI 1, or for handling, shipping, installation and bracing of trusses. A seal on this drawing or cover page listing this drawing, indicates acceptance of professional engineering responsibility solely for the design shown. The suitability and use of this drawing for any structure is the responsibility of the Building Designer per ANSI/TPI 1 Sec.2.

For more information see these web sites: Alpine: alpineitw.com; TPI: tpinst.org; SBCA: sbcindustry.com; ICC: iccsafe.org; AWC: awc.org

ALPINE AN ITW COMPANY
6750 Forum Drive
Suite 305
Orlando FL, 32821

SEQN: 394539 MONO FROM: CDM	Ply: 2 Qty: 1	**Job Number:** 20-4682 Reddoch **Truss Label:** J7B	Cust: R 215 JRef:1X1f2150003 T11 DrwNo: 358.20.1018.14857 / YK 12/23/2020

2 Complete Trusses Required

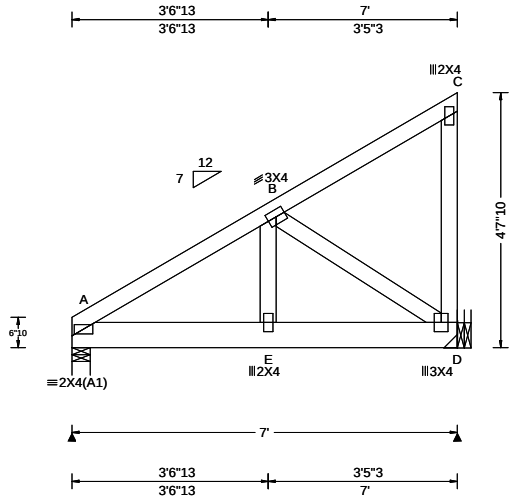

Loading Criteria (psf)	**Wind Criteria**	**Snow Criteria** (Pg,Pf in PSF)	**Defl/CSI Criteria**
TCLL: 20.00 TCDL: 7.00 BCLL: 0.00 BCDL: 10.00 Des Ld: 37.00 NCBCLL: 0.00 Soffit: 2.00 Load Duration: 1.25 Spacing: 24.0 "	Wind Std: ASCE 7-10 Speed: 130 mph Enclosure: Closed Risk Category: II EXP: C Kzt: NA Mean Height: 15.00 ft TCDL: 4.2 psf BCDL: 5.0 psf MWFRS Parallel Dist: h to 2h C&C Dist a: 3.00 ft Loc. from endwall: not in 9.00 ft GCpi: 0.18 Wind Duration: 1.60	Pg: NA Ct: NA CAT: NA Pf: NA Ce: NA Lu: NA Cs: NA Snow Duration: NA Building Code: FBC 2017 RES TPI Std: 2014 Rep Fac: Yes FT/RT:20(0)/10(0) Plate Type(s): WAVE	PP Deflection in loc L/defl L/# VERT(LL): 0.001 E 999 240 VERT(CL): 0.002 E 999 180 HORZ(LL): -0.000 C - - HORZ(TL): 0.001 C - - Creep Factor: 2.0 Max TC CSI: 0.083 Max BC CSI: 0.012 Max Web CSI: 0.044 VIEW Ver: 20.01.01A.0724.11

▲Maximum Reactions (lbs)

	Gravity			Non-Gravity		
Loc	R+	/ R-	/ Rh	/ Rw	/ U	/ RL
A	272	/-	/-	/167	/-	/77
D	261	/-	/-	/178	/45	/-

Wind reactions based on MWFRS
A Brg Width = 4.0 Min Req = 1.5
D Brg Width = - Min Req = -
Bearing A is a rigid surface.
Members not listed have forces less than 375#

Lumber

Top chord: 2x4 SP #2;
Bot chord: 2x6 SP 2400f-2.0E;
Webs: 2x4 SP #3;

Nailnote

Nail Schedule:0.131"x3", min. nails
Top Chord: 1 Row @12.00" o.c.
Bot Chord: 1 Row @12.00" o.c.
Webs : 1 Row @ 4" o.c.
Use equal spacing between rows and stagger nails in each row to avoid splitting.

Hangers / Ties

(J) Hanger Support Required, by others

Wind

Wind loads based on MWFRS.

Right end vertical not exposed to wind pressure.

Additional Notes

The overall height of this truss excluding overhang is 4-7-10.

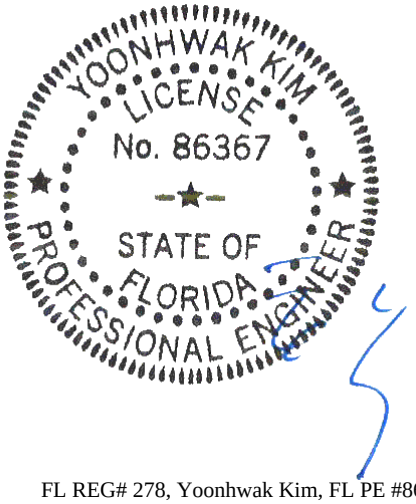

FL REG# 278, Yoonhwak Kim, FL PE #86367
12/23/2020

****WARNING**** READ AND FOLLOW ALL NOTES ON THIS DRAWING!
****IMPORTANT**** FURNISH THIS DRAWING TO ALL CONTRACTORS INCLUDING THE INSTALLERS

Trusses require extreme care in fabricating, handling, shipping, installing and bracing. Refer to and follow the latest edition of BCSI (Building Component Safety Information, by TPI and SBCA) for safety practices prior to performing these functions. Installers shall provide temporary bracing per BCSI. Unless noted otherwise, top chord shall have properly attached structural sheathing and bottom chord shall have a properly attached rigid ceiling. Locations shown for permanent lateral restraint of webs shall have bracing installed per BCSI sections B3, B7, or B10, as applicable. Apply plates to each face of truss and position as shown above and on the Joint Details, unless noted otherwise. Refer to drawings 160A-Z for standard plate positions. Refer to job's General Notes page for additional information.

Alpine, a division of ITW Building Components Group Inc. shall not be responsible for any deviation from this drawing, any failure to build the truss in conformance with ANSI/TPI 1, or for handling, shipping, installation and bracing of trusses. A seal on this drawing or cover page listing this drawing, indicates acceptance of professional engineering responsibility solely for the design shown. The suitability and use of this drawing for any structure is the responsibility of the Building Designer per ANSI/TPI 1 Sec.2.

For more information see these web sites: Alpine: alpineitw.com; TPI: tpinst.org; SBCA: sbcindustry.com; ICC: iccsafe.org; AWC: awc.org

ALPINE AN ITW COMPANY
6750 Forum Drive
Suite 305
Orlando FL, 32821

SEQN: 394529 EJAC FROM: CDM	Ply: 1 Qty: 6	**Job Number:** 20-4682 Reddoch **Truss Label:** J7C	Cust: R 215 JRef:1X1f2150003 T30 DrwNo: 358.20.1018.16827 / YK 12/23/2020

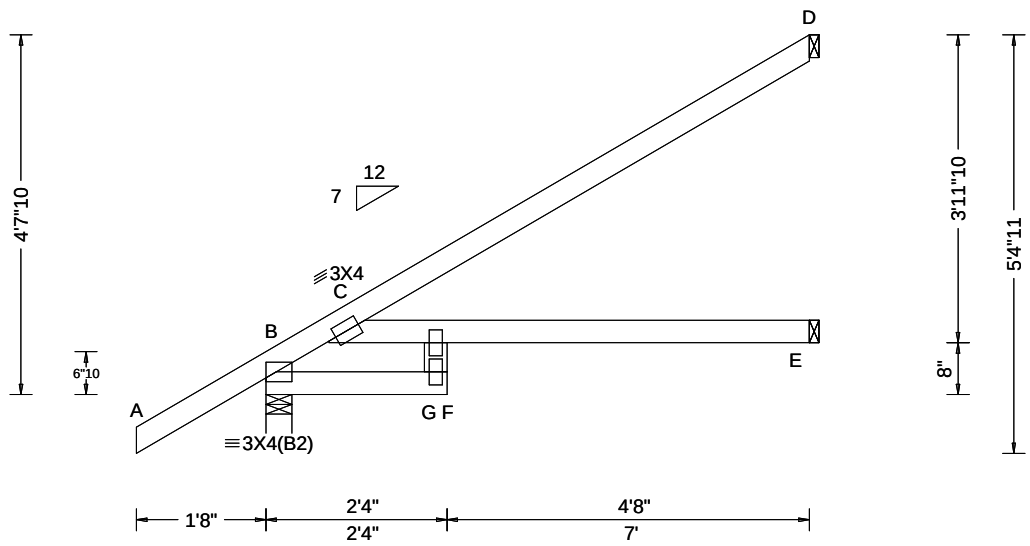

Loading Criteria (psf)

TCLL:	20.00
TCDL:	7.00
BCLL:	0.00
BCDL:	10.00
Des Ld:	37.00
NCBCLL:	10.00
Soffit:	2.00

Load Duration: 1.25
Spacing: 24.0 "

Wind Criteria
Wind Std: ASCE 7-10
Speed: 130 mph
Enclosure: Closed
Risk Category: II
EXP: C Kzt: NA
Mean Height: 15.00 ft
TCDL: 4.2 psf
BCDL: 5.0 psf
MWFRS Parallel Dist: h/2 to h
C&C Dist a: 3.00 ft
Loc. from endwall: not in 9.00 ft
GCpi: 0.18
Wind Duration: 1.60

Snow Criteria (Pg,Pf in PSF)
Pg: NA Ct: NA CAT: NA
Pf: NA Ce: NA
Lu: NA Cs: NA
Snow Duration: NA

Building Code:
FBC 2017 RES
TPI Std: 2014
Rep Fac: Yes
FT/RT:20(0)/10(0)
Plate Type(s):
WAVE

Defl/CSI Criteria

PP Deflection in	loc	L/defl	L/#
VERT(LL): 0.109	F	760	240
VERT(CL): 0.185	F	450	180
HORZ(LL): 0.046	G	-	-
HORZ(TL): 0.084	G	-	-

Creep Factor: 2.0
Max TC CSI: 0.648
Max BC CSI: 0.492
Max Web CSI: 0.206

VIEW Ver: 20.01.01A.0724.11

▲Maximum Reactions (lbs)

	Gravity			Non-Gravity		
Loc	R+	/ R-	/ Rh	/ Rw	/ U	/ RL
B	384	/-	/-	/257	/52	/144
E	126	/-	/-	/87	/2	/-
D	171	/-	/-	/81	/84	/-

Wind reactions based on MWFRS
B Brg Width = 4.0 Min Req = 1.5
E Brg Width = 1.5 Min Req = -
D Brg Width = 1.5 Min Req = -
Bearing B is a rigid surface.
Members not listed have forces less than 375#

Lumber

Top chord: 2x4 SP #2;
Bot chord: 2x4 SP #2;
Webs: 2x4 SP #3;

Plating Notes

All plates are 2X4 except as noted.

Wind

Wind loads based on MWFRS with additional C&C member design.

Additional Notes

The overall height of this truss excluding overhang is 4-7-10.

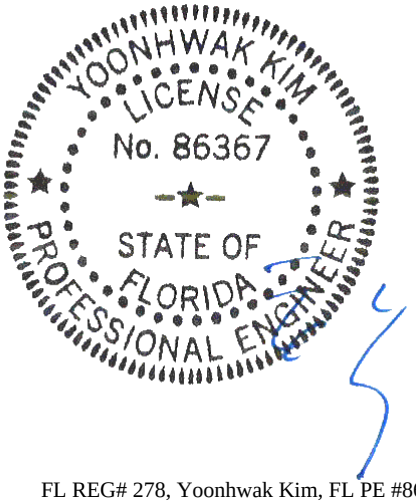

FL REG# 278, Yoonhwak Kim, FL PE #86367
12/23/2020

****WARNING**** READ AND FOLLOW ALL NOTES ON THIS DRAWING!
****IMPORTANT**** FURNISH THIS DRAWING TO ALL CONTRACTORS INCLUDING THE INSTALLERS

Trusses require extreme care in fabricating, handling, shipping, installing and bracing. Refer to and follow the latest edition of BCSI (Building Component Safety Information, by TPI and SBCA) for safety practices prior to performing these functions. Installers shall provide temporary bracing per BCSI. Unless noted otherwise, top chord shall have properly attached structural sheathing and bottom chord shall have a properly attached rigid ceiling. Locations shown for permanent lateral restraint of webs shall have bracing installed per BCSI sections B3, B7, or B10, as applicable. Apply plates to each face of truss and position as shown above and on the Joint Details, unless noted otherwise. Refer to drawings 160A-Z for standard plate positions. Refer to job's General Notes page for additional information.

Alpine, a division of ITW Building Components Group Inc. shall not be responsible for any deviation from this drawing, any failure to build the truss in conformance with ANSI/TPI 1, or for handling, shipping, installation and bracing of trusses. A seal on this drawing or cover page listing this drawing, indicates acceptance of professional engineering responsibility solely for the design shown. The suitability and use of this drawing for any structure is the responsibility of the Building Designer per ANSI/TPI 1 Sec.2.

For more information see these web sites: Alpine: alpineitw.com; TPI: tpinst.org; SBCA: sbcindustry.com; ICC: iccsafe.org; AWC: awc.org

ALPINE AN ITW COMPANY
6750 Forum Drive
Suite 305
Orlando FL, 32821

SEQN: 394530 COMN FROM: CDM	Ply: 1 Qty: 5	**Job Number:** 20-4682 Reddoch **Truss Label:** P01	Cust: R 215 JRef:1X1f2150003 T43 DrwNo: 358.20.1018.20047 / YK 12/23/2020

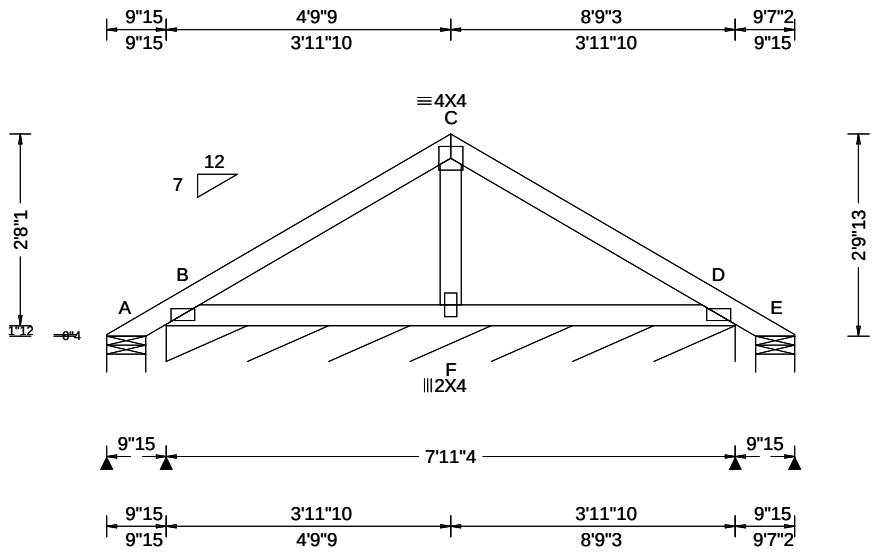

Loading Criteria (psf)

TCLL: 20.00
TCDL: 7.00
BCLL: 0.00
BCDL: 10.00
Des Ld: 37.00
NCBCLL: 10.00
Soffit: 2.00
Load Duration: 1.25
Spacing: 24.0 "

Wind Criteria

Wind Std: ASCE 7-10
Speed: 130 mph
Enclosure: Closed
Risk Category: II
EXP: C Kzt: NA
Mean Height: 20.98 ft
TCDL: 4.2 psf
BCDL: 2.0 psf
MWFRS Parallel Dist: h to 2h
C&C Dist a: 3.00 ft
Loc. from endwall: not in 9.00 ft
GCpi: 0.18
Wind Duration: 1.60

Snow Criteria (Pg,Pf in PSF)

Pg: NA Ct: NA CAT: NA
Pf: NA Ce: NA
Lu: NA Cs: NA
Snow Duration: NA

Building Code:
FBC 2017 RES
TPI Std: 2014
Rep Fac: Yes
FT/RT:20(0)/10(0)
Plate Type(s):
WAVE

Defl/CSI Criteria

PP Deflection in	loc	L/defl	L/#
VERT(LL): 0.002	F	999	240
VERT(CL): 0.002	F	999	180
HORZ(LL): -0.001	F	-	-
HORZ(TL): 0.002	F	-	-

Creep Factor: 2.0
Max TC CSI: 0.160
Max BC CSI: 0.087
Max Web CSI: 0.021

VIEW Ver: 20.01.01A.0724.11

▲Maximum Reactions (lbs), or *=PLF

	Gravity			Non-Gravity		
Loc	R+	/ R-	/ Rh	/ Rw	/ U	/ RL
A	-	/-62	/-	/60	/72	/73
B*	83	/-	/-	/50	/20	/-
E	-	/-62	/-	/24	/36	/-

Wind reactions based on MWFRS
A Brg Width = 6.5 Min Req = 1.5
B Brg Width = 95.3 Min Req = -
E Brg Width = 6.5 Min Req = 1.5
Bearings A, B, & E are a rigid surface.
Members not listed have forces less than 375#

Lumber

Top chord: 2x4 SP #2;
Bot chord: 2x4 SP #2;
Webs: 2x4 SP #3;

Plating Notes

All plates are 2X4(A1) except as noted.

Purlins

In lieu of rigid ceiling use purlins to brace BC @ 24" oc.

Wind

Wind loads based on MWFRS with additional C&C member design.

Additional Notes

Refer to DWG PB160101014 for piggyback details.

The overall height of this truss excluding overhang is 2-9-13.

YOONHWAK KIM
LICENSE
No. 86367
STATE OF
FLORIDA
PROFESSIONAL ENGINEER

FL REG# 278, Yoonhwak Kim, FL PE #86367
12/23/2020

****WARNING**** READ AND FOLLOW ALL NOTES ON THIS DRAWING!
****IMPORTANT**** FURNISH THIS DRAWING TO ALL CONTRACTORS INCLUDING THE INSTALLERS

Trusses require extreme care in fabricating, handling, shipping, installing and bracing. Refer to and follow the latest edition of BCSI (Building Component Safety Information, by TPI and SBCA) for safety practices prior to performing these functions. Installers shall provide temporary bracing per BCSI. Unless noted otherwise, top chord shall have properly attached structural sheathing and bottom chord shall have a properly attached rigid ceiling. Locations shown for permanent lateral restraint of webs shall have bracing installed per BCSI sections B3, B7, or B10, as applicable. Apply plates to each face of truss and position as shown above and on the Joint Details, unless noted otherwise. Refer to drawings 160A-Z for standard plate positions. Refer to job's General Notes page for additional information.

Alpine, a division of ITW Building Components Group Inc. shall not be responsible for any deviation from this drawing, any failure to build the truss in conformance with ANSI/TPI 1, or for handling, shipping, installation and bracing of trusses. A seal on this drawing or cover page listing this drawing, indicates acceptance of professional engineering responsibility solely for the design shown. The suitability and use of this drawing for any structure is the responsibility of the Building Designer per ANSI/TPI 1 Sec.2.

For more information see these web sites: Alpine: alpineitw.com; TPI: tpinst.org; SBCA: sbcindustry.com; ICC: iccsafe.org; AWC: awc.org

ALPINE AN ITW COMPANY
6750 Forum Drive
Suite 305
Orlando FL, 32821

SEQN: 394531 HIPS FROM: CDM	Ply: 1 Qty: 2	**Job Number:** 20-4682 Reddoch **Truss Label:** P02	Cust: R 215 JRef:1X1f2150003 T22 DrwNo: 358.20.1018.23457 / YK 12/23/2020

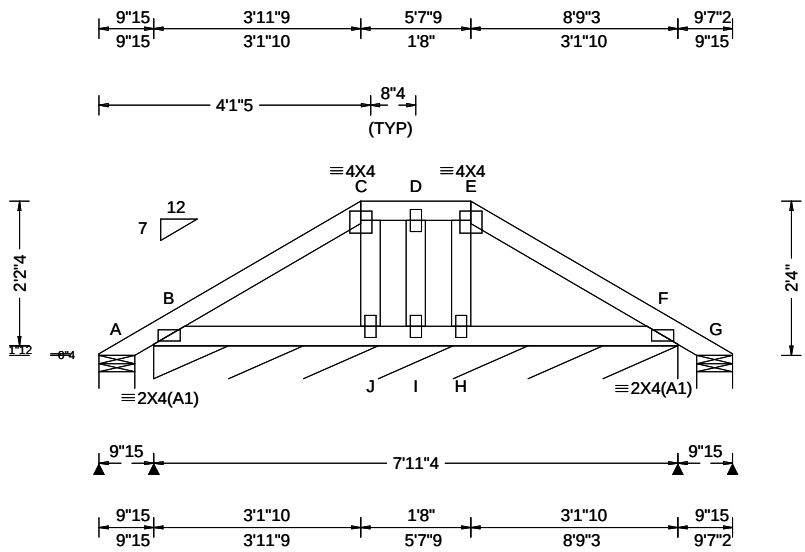

Loading Criteria (psf)	**Wind Criteria**	**Snow Criteria** (Pg,Pf in PSF)	**Defl/CSI Criteria**
TCLL: 20.00 TCDL: 7.00 BCLL: 0.00 BCDL: 10.00 Des Ld: 37.00 NCBCLL: 10.00 Soffit: 2.00 Load Duration: 1.25 Spacing: 24.0 "	Wind Std: ASCE 7-10 Speed: 130 mph Enclosure: Closed Risk Category: II EXP: C Kzt: NA Mean Height: 20.74 ft TCDL: 4.2 psf BCDL: 2.0 psf MWFRS Parallel Dist: h to 2h C&C Dist a: 3.00 ft Loc. from endwall: not in 9.00 ft GCpi: 0.18 Wind Duration: 1.60	Pg: NA Ct: NA CAT: NA Pf: NA Ce: NA Lu: NA Cs: NA Snow Duration: NA Building Code: FBC 2017 RES TPI Std: 2014 Rep Fac: Yes FT/RT:20(0)/10(0) Plate Type(s): WAVE	PP Deflection in loc L/defl L/# VERT(LL): 0.001 J 999 240 VERT(CL): 0.001 H 999 180 HORZ(LL): -0.001 H - - HORZ(TL): 0.001 H - - Creep Factor: 2.0 Max TC CSI: 0.099 Max BC CSI: 0.048 Max Web CSI: 0.014 VIEW Ver: 20.01.01A.0724.11

▲Maximum Reactions (lbs), or *=PLF

	Gravity			Non-Gravity		
Loc	R+	/ R-	/ Rh	/ Rw	/ U	/ RL
A	-	/-26	/-	/40	/43	/59
B*	75	/-	/-	/47	/17	/-
G	-	/-26	/-	/10	/13	/-

Wind reactions based on MWFRS
A Brg Width = 6.5 Min Req = 1.5
B Brg Width = 95.3 Min Req = -
G Brg Width = 6.5 Min Req = 1.5
Bearings A, B, & G are a rigid surface.
Members not listed have forces less than 375#

Lumber

Top chord: 2x4 SP #2;
Bot chord: 2x4 SP #2;
Webs: 2x4 SP #3;

Plating Notes

All plates are 2X4 except as noted.

Purlins

In lieu of rigid ceiling use purlins to brace BC @ 24" oc.

Wind

Wind loads based on MWFRS with additional C&C member design.

Additional Notes

Refer to DWG PB160101014 for piggyback details.

The overall height of this truss excluding overhang is 2-4-0.

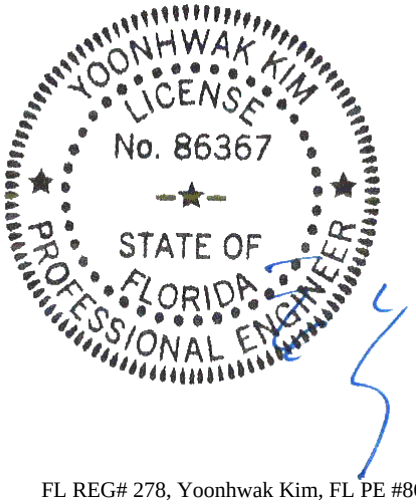

FL REG# 278, Yoonhwak Kim, FL PE #86367
12/23/2020

****WARNING**** READ AND FOLLOW ALL NOTES ON THIS DRAWING!
****IMPORTANT**** FURNISH THIS DRAWING TO ALL CONTRACTORS INCLUDING THE INSTALLERS

Trusses require extreme care in fabricating, handling, shipping, installing and bracing. Refer to and follow the latest edition of BCSI (Building Component Safety Information, by TPI and SBCA) for safety practices prior to performing these functions. Installers shall provide temporary bracing per BCSI. Unless noted otherwise, top chord shall have properly attached structural sheathing and bottom chord shall have a properly attached rigid ceiling. Locations shown for permanent lateral restraint of webs shall have bracing installed per BCSI sections B3, B7, or B10, as applicable. Apply plates to each face of truss and position as shown above and on the Joint Details, unless noted otherwise. Refer to drawings 160A-Z for standard plate positions. Refer to job's General Notes page for additional information.

Alpine, a division of ITW Building Components Group Inc. shall not be responsible for any deviation from this drawing, any failure to build the truss in conformance with ANSI/TPI 1, or for handling, shipping, installation and bracing of trusses. A seal on this drawing or cover page listing this drawing, indicates acceptance of professional engineering responsibility solely for the design shown. The suitability and use of this drawing for any structure is the responsibility of the Building Designer per ANSI/TPI 1 Sec.2.

For more information see these web sites: Alpine: alpineitw.com; TPI: tpinst.org; SBCA: sbcindustry.com; ICC: iccsafe.org; AWC: awc.org

ALPINE AN ITW COMPANY
6750 Forum Drive
Suite 305
Orlando FL, 32821

SEQN: 394532 HIPS FROM: CDM	Ply: 1 Qty: 2	**Job Number:** 20-4682 Reddoch **Truss Label:** P03	Cust: R 215 JRef:1X1f2150003 T54 DrwNo: 358.20.1018.25860 / YK 12/23/2020

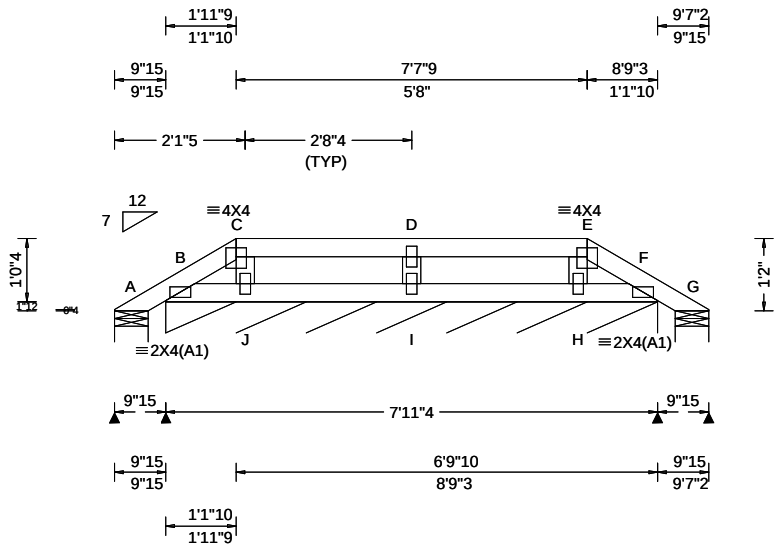

Loading Criteria (psf)

TCLL: 20.00
TCDL: 7.00
BCLL: 0.00
BCDL: 10.00
Des Ld: 37.00
NCBCLL: 10.00
Soffit: 2.00
Load Duration: 1.25
Spacing: 24.0 "

Wind Criteria

Wind Std: ASCE 7-10
Speed: 130 mph
Enclosure: Closed
Risk Category: II
EXP: C Kzt: NA
Mean Height: 20.16 ft
TCDL: 4.2 psf
BCDL: 2.0 psf
MWFRS Parallel Dist: h to 2h
C&C Dist a: 3.00 ft
Loc. from endwall: not in 9.00 ft
GCpi: 0.18
Wind Duration: 1.60

Snow Criteria (Pg,Pf in PSF)

Pg: NA Ct: NA CAT: NA
Pf: NA Ce: NA
Lu: NA Cs: NA
Snow Duration: NA

Building Code:
FBC 2017 RES
TPI Std: 2014
Rep Fac: Yes
FT/RT:20(0)/10(0)
Plate Type(s):
WAVE

Defl/CSI Criteria

PP Deflection in	loc	L/defl	L/#
VERT(LL): 0.000	D	999	240
VERT(CL): 0.000	D	999	180
HORZ(LL): 0.000	H	-	-
HORZ(TL): 0.000	H	-	-

Creep Factor: 2.0
Max TC CSI: 0.133
Max BC CSI: 0.037
Max Web CSI: 0.039

VIEW Ver: 20.01.01A.0724.11

▲Maximum Reactions (lbs), or *=PLF

	Gravity			Non-Gravity		
Loc	R+	/ R-	/ Rh	/ Rw	/ U	/ RL
A	17	/-	/-	/22	/10	/27
B*	64	/-	/-	/40	/24	/-
G	17	/-	/-	/18	/6	/-
I		/-102				

Wind reactions based on MWFRS
A Brg Width = 6.5 Min Req = 1.5
B Brg Width = 95.3 Min Req = -
G Brg Width = 6.5 Min Req = 1.5
Bearings A, B, & G are a rigid surface.
Members not listed have forces less than 375#

Lumber

Top chord: 2x4 SP #2;
Bot chord: 2x4 SP #2;
Webs: 2x4 SP #3;

Plating Notes

All plates are 2X4 except as noted.

Purlins

In lieu of rigid ceiling use purlins to brace BC @ 24" oc.

Wind

Wind loads based on MWFRS with additional C&C member design.

Additional Notes

Refer to DWG PB160101014 for piggyback details.

The overall height of this truss excluding overhang is 1-2-0.

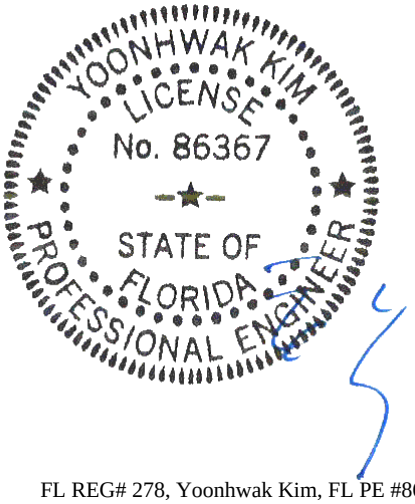

FL REG# 278, Yoonhwak Kim, FL PE #86367
12/23/2020

****WARNING**** READ AND FOLLOW ALL NOTES ON THIS DRAWING!
****IMPORTANT**** FURNISH THIS DRAWING TO ALL CONTRACTORS INCLUDING THE INSTALLERS

Trusses require extreme care in fabricating, handling, shipping, installing and bracing. Refer to and follow the latest edition of BCSI (Building Component Safety Information, by TPI and SBCA) for safety practices prior to performing these functions. Installers shall provide temporary bracing per BCSI. Unless noted otherwise, top chord shall have properly attached structural sheathing and bottom chord shall have a properly attached rigid ceiling. Locations shown for permanent lateral restraint of webs shall have bracing installed per BCSI sections B3, B7, or B10, as applicable. Apply plates to each face of truss and position as shown above and on the Joint Details, unless noted otherwise. Refer to drawings 160A-Z for standard plate positions. Refer to job's General Notes page for additional information.

Alpine, a division of ITW Building Components Group Inc. shall not be responsible for any deviation from this drawing, any failure to build the truss in conformance with ANSI/TPI 1, or for handling, shipping, installation and bracing of trusses. A seal on this drawing or cover page listing this drawing, indicates acceptance of professional engineering responsibility solely for the design shown. The suitability and use of this drawing for any structure is the responsibility of the Building Designer per ANSI/TPI 1 Sec.2.

For more information see these web sites: Alpine: alpineitw.com; TPI: tpinst.org; SBCA: sbcindustry.com; ICC: iccsafe.org; AWC: awc.org

ALPINE AN ITW COMPANY
6750 Forum Drive
Suite 305
Orlando FL, 32821

SEQN: 394533 VAL FROM: CDM	Ply: 1 Qty: 1	**Job Number:** 20-4682 Reddoch **Truss Label:** V1	Cust: R 215 JRef:1X1f2150003 T33 DrwNo: 358.20.1018.28567 / YK 12/23/2020

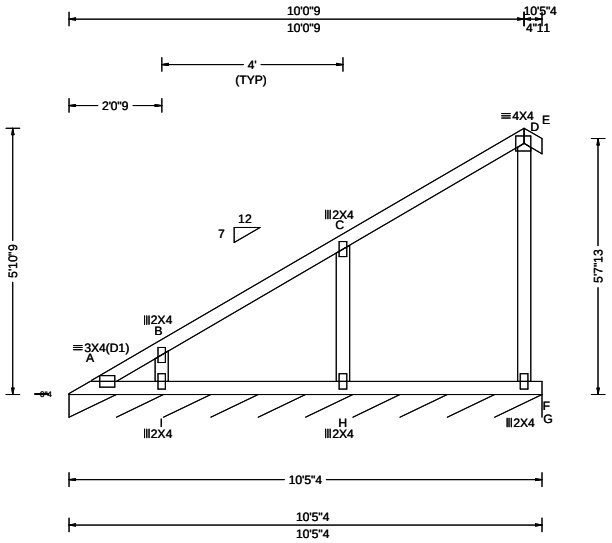

Loading Criteria (psf)

TCLL: 20.00
TCDL: 7.00
BCLL: 0.00
BCDL: 10.00
Des Ld: 37.00
NCBCLL: 10.00
Soffit: 2.00
Load Duration: 1.25
Spacing: 24.0 "

Wind Criteria

Wind Std: ASCE 7-10
Speed: 130 mph
Enclosure: Closed
Risk Category: II
EXP: C Kzt: NA
Mean Height: 15.00 ft
TCDL: 4.2 psf
BCDL: 5.0 psf
MWFRS Parallel Dist: 0 to h/2
C&C Dist a: 3.00 ft
Loc. from endwall: not in 4.50 ft
GCpi: 0.18
Wind Duration: 1.60

Snow Criteria (Pg,Pf in PSF)

Pg: NA Ct: NA CAT: NA
Pf: NA Ce: NA
Lu: NA Cs: NA
Snow Duration: NA

Building Code:
FBC 2017 RES
TPI Std: 2014
Rep Fac: Yes
FT/RT:20(0)/10(0)
Plate Type(s):
WAVE

Defl/CSI Criteria

PP Deflection in	loc	L/defl	L/#
VERT(LL): 0.018	E	0	240
VERT(CL): 0.035	E	0	180
HORZ(LL): -0.010	E	-	-
HORZ(TL): 0.019	E	-	-

Creep Factor: 2.0
Max TC CSI: 0.259
Max BC CSI: 0.181
Max Web CSI: 0.070

VIEW Ver: 20.01.01A.0724.11

▲ Maximum Reactions (lbs), or *=PLF

	Gravity			Non-Gravity		
Loc	R+	/ R-	/ Rh	/ Rw	/ U	/ RL
F*	76	/-	/-	/48	/14	/15

Wind reactions based on MWFRS
F Brg Width = 125 Min Req = -
Bearing A is a rigid surface.
Members not listed have forces less than 375#

Lumber

Top chord: 2x4 SP #2;
Bot chord: 2x4 SP #2;
Webs: 2x4 SP #3;

Wind

Wind loads based on MWFRS with additional C&C member design.

Right end vertical not exposed to wind pressure.

Additional Notes

See DWG VAL160101014 for valley details.

The overall height of this truss excluding overhang is 5-10-9.

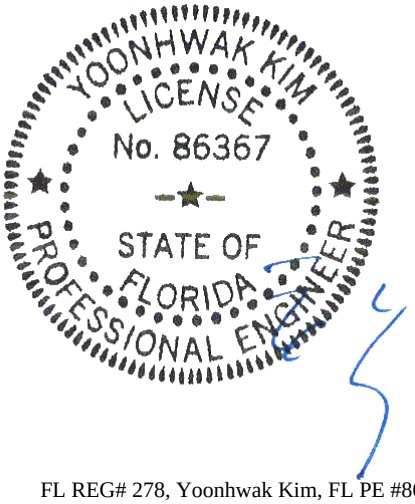

FL REG# 278, Yoonhwak Kim, FL PE #86367
12/23/2020

****WARNING**** READ AND FOLLOW ALL NOTES ON THIS DRAWING!
****IMPORTANT**** FURNISH THIS DRAWING TO ALL CONTRACTORS INCLUDING THE INSTALLERS

Trusses require extreme care in fabricating, handling, shipping, installing and bracing. Refer to and follow the latest edition of BCSI (Building Component Safety Information, by TPI and SBCA) for safety practices prior to performing these functions. Installers shall provide temporary bracing per BCSI. Unless noted otherwise, top chord shall have properly attached structural sheathing and bottom chord shall have a properly attached rigid ceiling. Locations shown for permanent lateral restraint of webs shall have bracing installed per BCSI sections B3, B7, or B10, as applicable. Apply plates to each face of truss and position as shown above and on the Joint Details, unless noted otherwise. Refer to drawings 160A-Z for standard plate positions. Refer to job's General Notes page for additional information.

Alpine, a division of ITW Building Components Group Inc. shall not be responsible for any deviation from this drawing, any failure to build the truss in conformance with ANSI/TPI 1, or for handling, shipping, installation and bracing of trusses. A seal on this drawing or cover page listing this drawing, indicates acceptance of professional engineering responsibility solely for the design shown. The suitability and use of this drawing for any structure is the responsibility of the Building Designer per ANSI/TPI 1 Sec.2.

For more information see these web sites: Alpine: alpineitw.com; TPI: tpinst.org; SBCA: sbcindustry.com; ICC: iccsafe.org; AWC: awc.org

ALPINE AN ITW COMPANY
6750 Forum Drive
Suite 305
Orlando FL, 32821

SEQN: 394534 VAL FROM: CDM	Ply: 1 Qty: 1	**Job Number:** 20-4682 Reddoch **Truss Label:** V2	Cust: R 215 JRef:1X1f2150003 T6 DrwNo: 358.20.1018.29870 / YK 12/23/2020

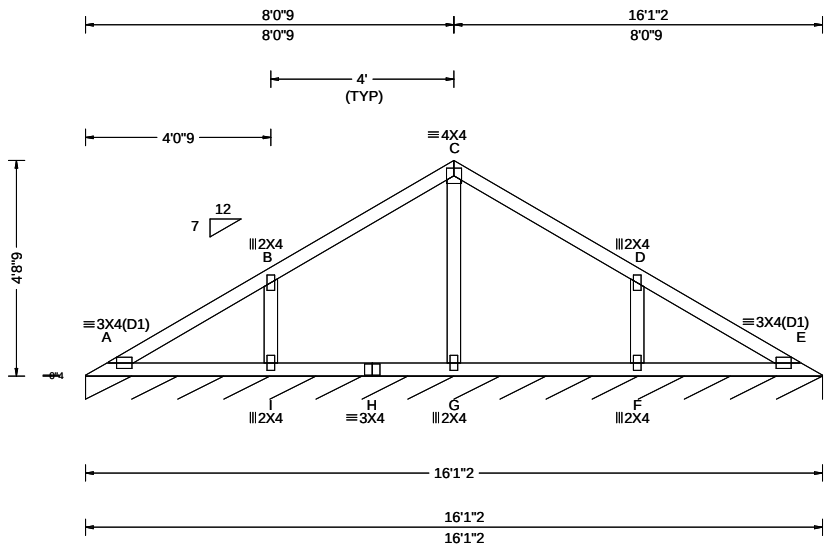

Loading Criteria (psf)

TCLL: 20.00
TCDL: 7.00
BCLL: 0.00
BCDL: 10.00
Des Ld: 37.00
NCBCLL: 10.00
Soffit: 2.00
Load Duration: 1.25
Spacing: 24.0 "

Wind Criteria

Wind Std: ASCE 7-10
Speed: 130 mph
Enclosure: Closed
Risk Category: II
EXP: C Kzt: NA
Mean Height: 15.00 ft
TCDL: 4.2 psf
BCDL: 5.0 psf
MWFRS Parallel Dist: h/2 to h
C&C Dist a: 3.00 ft
Loc. from endwall: not in 9.00 ft
GCpi: 0.18
Wind Duration: 1.60

Snow Criteria (Pg,Pf in PSF)

Pg: NA Ct: NA CAT: NA
Pf: NA Ce: NA
Lu: NA Cs: NA
Snow Duration: NA

Building Code:
FBC 2017 RES
TPI Std: 2014
Rep Fac: Yes
FT/RT:20(0)/10(0)
Plate Type(s):
WAVE

Defl/CSI Criteria

PP Deflection in	loc	L/defl	L/#
VERT(LL): 0.005	I	999	240
VERT(CL): 0.010	I	999	180
HORZ(LL): -0.002	F	-	-
HORZ(TL): 0.004	F	-	-

Creep Factor: 2.0
Max TC CSI: 0.271
Max BC CSI: 0.152
Max Web CSI: 0.090

VIEW Ver: 20.01.01A.0724.11

▲Maximum Reactions (lbs), or *=PLF

	Gravity			Non-Gravity		
Loc	R+	/ R-	/ Rh	/ Rw	/ U	/ RL
E*	76	/-	/-	/37	/14	/7

Wind reactions based on MWFRS
E Brg Width = 193 Min Req = -
Bearing A is a rigid surface.
Members not listed have forces less than 375#

Lumber

Top chord: 2x4 SP #2;
Bot chord: 2x4 SP #2;
Webs: 2x4 SP #3;

Wind

Wind loads based on MWFRS with additional C&C member design.

Additional Notes

See DWG VAL160101014 for valley details.

The overall height of this truss excluding overhang is 4-8-9.

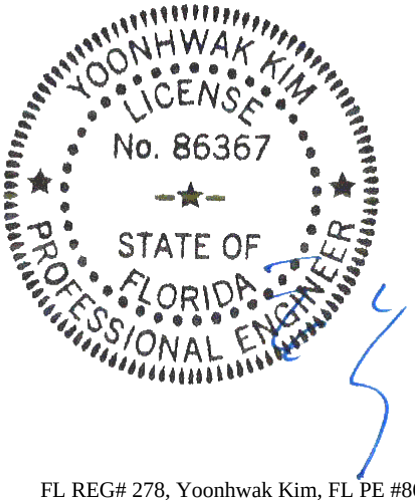

FL REG# 278, Yoonhwak Kim, FL PE #86367
12/23/2020

****WARNING**** READ AND FOLLOW ALL NOTES ON THIS DRAWING!
****IMPORTANT**** FURNISH THIS DRAWING TO ALL CONTRACTORS INCLUDING THE INSTALLERS

Trusses require extreme care in fabricating, handling, shipping, installing and bracing. Refer to and follow the latest edition of BCSI (Building Component Safety Information, by TPI and SBCA) for safety practices prior to performing these functions. Installers shall provide temporary bracing per BCSI. Unless noted otherwise, top chord shall have properly attached structural sheathing and bottom chord shall have a properly attached rigid ceiling. Locations shown for permanent lateral restraint of webs shall have bracing installed per BCSI sections B3, B7, or B10, as applicable. Apply plates to each face of truss and position as shown above and on the Joint Details, unless noted otherwise. Refer to drawings 160A-Z for standard plate positions. Refer to job's General Notes page for additional information.

Alpine, a division of ITW Building Components Group Inc. shall not be responsible for any deviation from this drawing, any failure to build the truss in conformance with ANSI/TPI 1, or for handling, shipping, installation and bracing of trusses. A seal on this drawing or cover page listing this drawing, indicates acceptance of professional engineering responsibility solely for the design shown. The suitability and use of this drawing for any structure is the responsibility of the Building Designer per ANSI/TPI 1 Sec.2.

For more information see these web sites: Alpine: alpineitw.com; TPI: tpinst.org; SBCA: sbcindustry.com; ICC: iccsafe.org; AWC: awc.org

ALPINE AN ITW COMPANY
6750 Forum Drive
Suite 305
Orlando FL, 32821

SEQN: 394535 VAL FROM: CDM	Ply: 1 Qty: 1	**Job Number:** 20-4682 Reddoch **Truss Label:** V3	Cust: R 215 JRef:1X1f2150003 T15 DrwNo: 358.20.1018.31530 / YK 12/23/2020

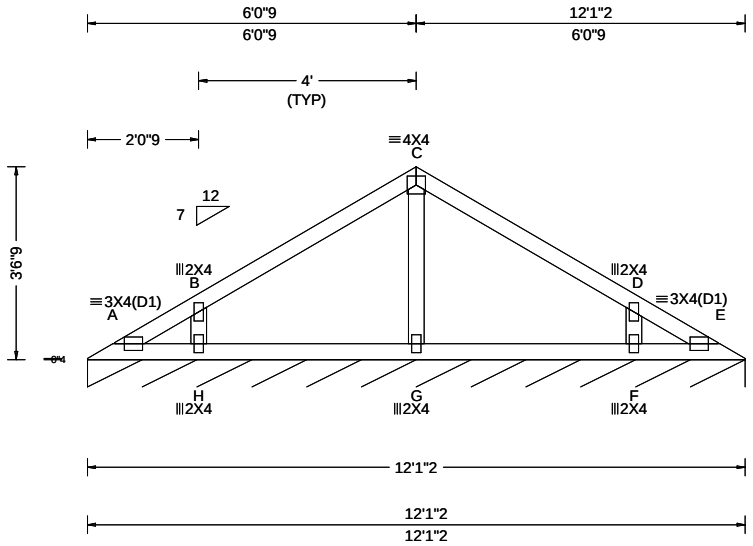

Loading Criteria (psf)	**Wind Criteria**	**Snow Criteria** (Pg,Pf in PSF)	**Defl/CSI Criteria**	▲ **Maximum Reactions (lbs), or *=PLF**
TCLL: 20.00 TCDL: 7.00 BCLL: 0.00 BCDL: 10.00 Des Ld: 37.00 NCBCLL: 10.00 Soffit: 2.00 Load Duration: 1.25 Spacing: 24.0 "	Wind Std: ASCE 7-10 Speed: 130 mph Enclosure: Closed Risk Category: II EXP: C Kzt: NA Mean Height: 15.00 ft TCDL: 4.2 psf BCDL: 5.0 psf MWFRS Parallel Dist: h/2 to h C&C Dist a: 3.00 ft Loc. from endwall: not in 9.00 ft GCpi: 0.18 Wind Duration: 1.60	Pg: NA Ct: NA CAT: NA Pf: NA Ce: NA Lu: NA Cs: NA Snow Duration: NA Building Code: FBC 2017 RES TPI Std: 2014 Rep Fac: Yes FT/RT:20(0)/10(0) Plate Type(s): WAVE	PP Deflection in loc L/defl L/# VERT(LL): 0.000 C 999 240 VERT(CL): 0.001 C 999 180 HORZ(LL): -0.000 B - - HORZ(TL): 0.001 H - - Creep Factor: 2.0 Max TC CSI: 0.214 Max BC CSI: 0.151 Max Web CSI: 0.048 VIEW Ver: 20.01.01A.0724.11	Gravity / Non-Gravity Loc R+ / R- / Rh / Rw / U / RL E* 76 /- /- /36 /14 /7 Wind reactions based on MWFRS E Brg Width = 145 Min Req = - Bearing A is a rigid surface. Members not listed have forces less than 375#

Lumber

Top chord: 2x4 SP #2;
Bot chord: 2x4 SP #2;
Webs: 2x4 SP #3;

Wind

Wind loads based on MWFRS with additional C&C member design.

Additional Notes

See DWG VAL160101014 for valley details.

The overall height of this truss excluding overhang is 3-6-9.

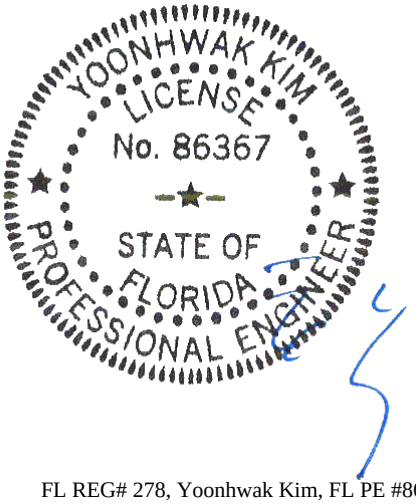

FL REG# 278, Yoonhwak Kim, FL PE #86367
12/23/2020

****WARNING**** READ AND FOLLOW ALL NOTES ON THIS DRAWING!
****IMPORTANT**** FURNISH THIS DRAWING TO ALL CONTRACTORS INCLUDING THE INSTALLERS

Trusses require extreme care in fabricating, handling, shipping, installing and bracing. Refer to and follow the latest edition of BCSI (Building Component Safety Information, by TPI and SBCA) for safety practices prior to performing these functions. Installers shall provide temporary bracing per BCSI. Unless noted otherwise, top chord shall have properly attached structural sheathing and bottom chord shall have a properly attached rigid ceiling. Locations shown for permanent lateral restraint of webs shall have bracing installed per BCSI sections B3, B7, or B10, as applicable. Apply plates to each face of truss and position as shown above and on the Joint Details, unless noted otherwise. Refer to drawings 160A-Z for standard plate positions. Refer to job's General Notes page for additional information.

Alpine, a division of ITW Building Components Group Inc. shall not be responsible for any deviation from this drawing, any failure to build the truss in conformance with ANSI/TPI 1, or for handling, shipping, installation and bracing of trusses. A seal on this drawing or cover page listing this drawing, indicates acceptance of professional engineering responsibility solely for the design shown. The suitability and use of this drawing for any structure is the responsibility of the Building Designer per ANSI/TPI 1 Sec.2.

For more information see these web sites: Alpine: alpineitw.com; TPI: tpinst.org; SBCA: sbcindustry.com; ICC: iccsafe.org; AWC: awc.org

ALPINE AN ITW COMPANY
6750 Forum Drive
Suite 305
Orlando FL, 32821

SEQN: 394536 VAL FROM: CDM	Ply: 1 Qty: 1	**Job Number:** 20-4682 Reddoch **Truss Label:** V4	Cust: R 215 JRef:1X1f2150003 T21 DrwNo: 358.20.1018.33760 / YK 12/23/2020

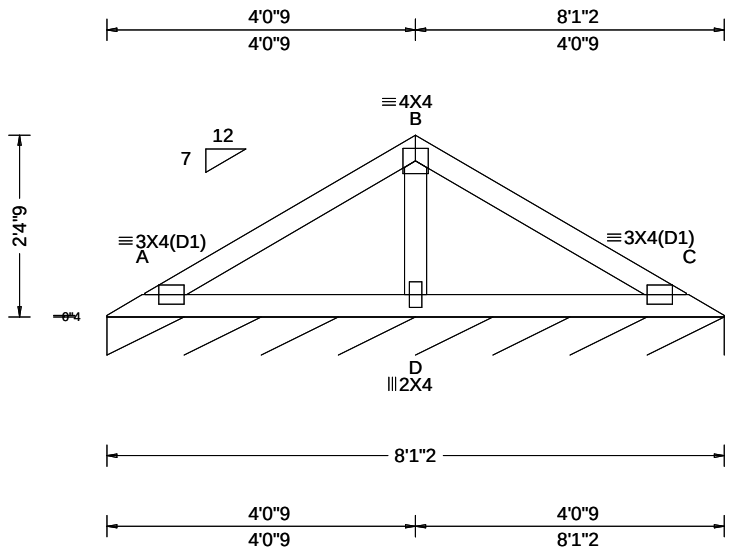

Loading Criteria (psf)	**Wind Criteria**	**Snow Criteria** (Pg,Pf in PSF)	**Defl/CSI Criteria**	**▲Maximum Reactions (lbs), or *=PLF**
TCLL: 20.00 TCDL: 7.00 BCLL: 0.00 BCDL: 10.00 Des Ld: 37.00 NCBCLL: 10.00 Soffit: 2.00 Load Duration: 1.25 Spacing: 24.0 "	Wind Std: ASCE 7-10 Speed: 130 mph Enclosure: Closed Risk Category: II EXP: C Kzt: NA Mean Height: 15.33 ft TCDL: 4.2 psf BCDL: 5.0 psf MWFRS Parallel Dist: h/2 to h C&C Dist a: 3.00 ft Loc. from endwall: not in 9.00 ft GCpi: 0.18 Wind Duration: 1.60	Pg: NA Ct: NA CAT: NA Pf: NA Ce: NA Lu: NA Cs: NA Snow Duration: NA Building Code: FBC 2017 RES TPI Std: 2014 Rep Fac: Yes FT/RT:20(0)/10(0) Plate Type(s): WAVE	PP Deflection in loc L/defl L/# VERT(LL): 0.007 D 999 240 VERT(CL): 0.013 D 999 180 HORZ(LL): -0.003 D - - HORZ(TL): 0.006 D - - Creep Factor: 2.0 Max TC CSI: 0.197 Max BC CSI: 0.164 Max Web CSI: 0.067 VIEW Ver: 20.01.01A.0724.11	Gravity / Non-Gravity Loc R+ / R- / Rh / Rw / U / RL C* 76 /- /- /36 /13 /6 Wind reactions based on MWFRS C Brg Width = 97.1 Min Req = - Bearing A is a rigid surface. Members not listed have forces less than 375#

Lumber

Top chord: 2x4 SP #2;
Bot chord: 2x4 SP #2;
Webs: 2x4 SP #3;

Wind

Wind loads based on MWFRS with additional C&C member design.

Additional Notes

See DWG VAL160101014 for valley details.

The overall height of this truss excluding overhang is 2-4-9.

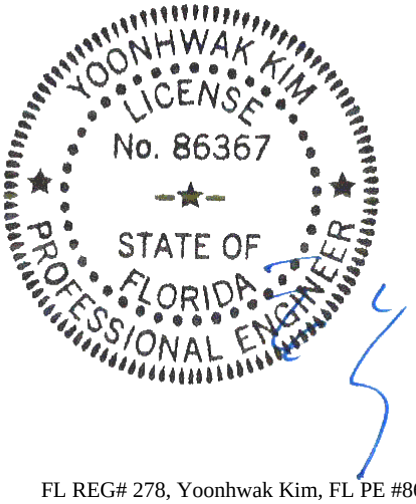

FL REG# 278, Yoonhwak Kim, FL PE #86367
12/23/2020

****WARNING**** READ AND FOLLOW ALL NOTES ON THIS DRAWING!
****IMPORTANT**** FURNISH THIS DRAWING TO ALL CONTRACTORS INCLUDING THE INSTALLERS

Trusses require extreme care in fabricating, handling, shipping, installing and bracing. Refer to and follow the latest edition of BCSI (Building Component Safety Information, by TPI and SBCA) for safety practices prior to performing these functions. Installers shall provide temporary bracing per BCSI. Unless noted otherwise, top chord shall have properly attached structural sheathing and bottom chord shall have a properly attached rigid ceiling. Locations shown for permanent lateral restraint of webs shall have bracing installed per BCSI sections B3, B7, or B10, as applicable. Apply plates to each face of truss and position as shown above and on the Joint Details, unless noted otherwise. Refer to drawings 160A-Z for standard plate positions. Refer to job's General Notes page for additional information.

Alpine, a division of ITW Building Components Group Inc. shall not be responsible for any deviation from this drawing, any failure to build the truss in conformance with ANSI/TPI 1, or for handling, shipping, installation and bracing of trusses. A seal on this drawing or cover page listing this drawing, indicates acceptance of professional engineering responsibility solely for the design shown. The suitability and use of this drawing for any structure is the responsibility of the Building Designer per ANSI/TPI 1 Sec.2.

For more information see these web sites: Alpine: alpineitw.com; TPI: tpinst.org; SBCA: sbcindustry.com; ICC: iccsafe.org; AWC: awc.org

ALPINE AN ITW COMPANY
6750 Forum Drive
Suite 305
Orlando FL, 32821

SEQN: 394537 VAL FROM: CDM	Ply: 1 Qty: 1	**Job Number:** 20-4682 Reddoch **Truss Label:** V5	Cust: R 215 JRef:1X1f2150003 T32 DrwNo: 358.20.1018.38040 / YK 12/23/2020

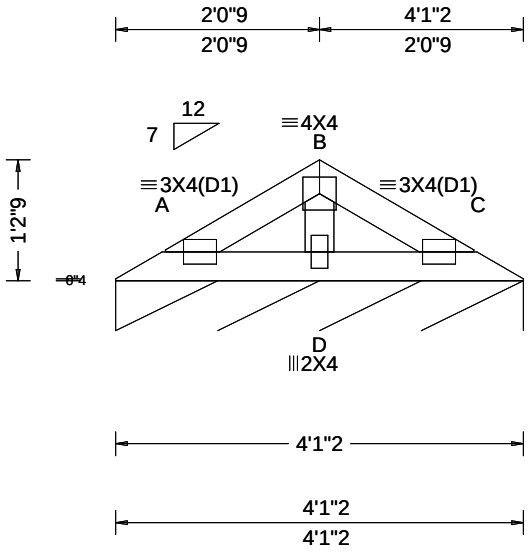

Loading Criteria (psf)
TCLL: 20.00
TCDL: 7.00
BCLL: 0.00
BCDL: 10.00
Des Ld: 37.00
NCBCLL: 10.00
Soffit: 2.00
Load Duration: 1.25
Spacing: 24.0 "

Wind Criteria
Wind Std: ASCE 7-10
Speed: 130 mph
Enclosure: Closed
Risk Category: II
EXP: C Kzt: NA
Mean Height: 15.91 ft
TCDL: 4.2 psf
BCDL: 5.0 psf
MWFRS Parallel Dist: h/2 to h
C&C Dist a: 3.00 ft
Loc. from endwall: not in 9.00 ft
GCpi: 0.18
Wind Duration: 1.60

Snow Criteria (Pg,Pf in PSF)
Pg: NA Ct: NA CAT: NA
Pf: NA Ce: NA
Lu: NA Cs: NA
Snow Duration: NA

Building Code:
FBC 2017 RES
TPI Std: 2014
Rep Fac: Yes
FT/RT:20(0)/10(0)
Plate Type(s):
WAVE

Defl/CSI Criteria

PP Deflection in	loc	L/defl	L/#
VERT(LL): 0.001	D	999	240
VERT(CL): 0.001	D	999	180
HORZ(LL): -0.000	D	-	-
HORZ(TL): 0.001	D	-	-

Creep Factor: 2.0
Max TC CSI: 0.039
Max BC CSI: 0.040
Max Web CSI: 0.021

VIEW Ver: 20.01.01A.0724.11

▲Maximum Reactions (lbs), or *=PLF

	Gravity			Non-Gravity		
Loc	R+	/ R-	/ Rh	/ Rw	/ U	/ RL
C*	76	/-	/-	/35	/10	/5

Wind reactions based on MWFRS
C Brg Width = 49.1 Min Req = -
Bearing A is a rigid surface.
Members not listed have forces less than 375#

Lumber

Top chord: 2x4 SP #2;
Bot chord: 2x4 SP #2;
Webs: 2x4 SP #3;

Wind

Wind loads based on MWFRS with additional C&C member design.

Additional Notes

See DWG VAL160101014 for valley details.

The overall height of this truss excluding overhang is 1-2-9.

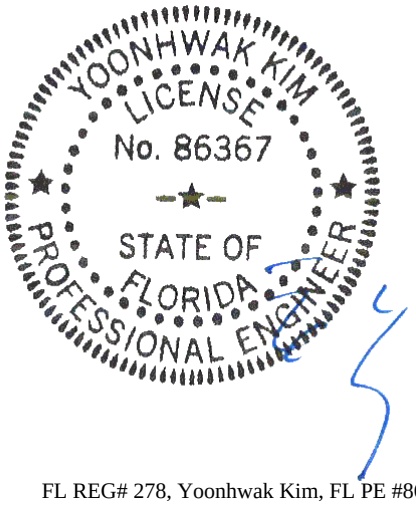

FL REG# 278, Yoonhwak Kim, FL PE #86367
12/23/2020

****WARNING**** READ AND FOLLOW ALL NOTES ON THIS DRAWING!
****IMPORTANT**** FURNISH THIS DRAWING TO ALL CONTRACTORS INCLUDING THE INSTALLERS

Trusses require extreme care in fabricating, handling, shipping, installing and bracing. Refer to and follow the latest edition of BCSI (Building Component Safety Information, by TPI and SBCA) for safety practices prior to performing these functions. Installers shall provide temporary bracing per BCSI. Unless noted otherwise, top chord shall have properly attached structural sheathing and bottom chord shall have a properly attached rigid ceiling. Locations shown for permanent lateral restraint of webs shall have bracing installed per BCSI sections B3, B7, or B10, as applicable. Apply plates to each face of truss and position as shown above and on the Joint Details, unless noted otherwise. Refer to drawings 160A-Z for standard plate positions. Refer to job's General Notes page for additional information.

Alpine, a division of ITW Building Components Group Inc. shall not be responsible for any deviation from this drawing, any failure to build the truss in conformance with ANSI/TPI 1, or for handling, shipping, installation and bracing of trusses. A seal on this drawing or cover page listing this drawing, indicates acceptance of professional engineering responsibility solely for the design shown. The suitability and use of this drawing for any structure is the responsibility of the Building Designer per ANSI/TPI 1 Sec.2.

For more information see these web sites: Alpine: alpineitw.com; TPI: tpinst.org; SBCA: sbcindustry.com; ICC: iccsafe.org; AWC: awc.org

ALPINE AN ITW COMPANY
6750 Forum Drive
Suite 305
Orlando FL, 32821

CLR Reinforcing Member Substitution

This detail is to be used when a Continuous Lateral Restraint (CLR) is specified on a truss design but an alternative web reinforcement method is desired.

Notes:

This detail is only applicable for changing the specified CLR shown on single ply sealed designs to T-reinforcement or L-reinforecement or scab reinforcement.

Alternative reinforcement specified in chart below may be conservative. For minimum alternative reinforcement, re-run design with appropriate reinforcement type.

Use scabs instead of L- or T- reinforcement on webs with intersecting truss joints, such as K-web joints, that may interfere with proper application along the narrow face of the web.

Web Member Size	Specified CLR Restraint	Alternative Reinforecement T- or L- Reinf.	Alternative Reinforecement Scab Reinf.
2x3 or 2x4	1 row	2x4	1-2x4
2x3 or 2x4	2 rows	2x6	2-2x4
2x6	1 row	2x4	1-2x6
2x6	2 rows	2x6	2-2x4(✱)
2x8	1 row	2x6	1-2x8
2x8	2 rows	2x6	2-2x6(✱)

T-reinforcement, L-reinforcement, or scab reinforcement to be same species and grade or better than web member unless specified otherwise on Engineer's sealed design.

(✱) Center scab on wide face of web. Apply (1) scab to each face of web.

T-Reinforcement or L-Reinforcement:

Apply to either side of web narrow face. Attach with 10d (0.128"x3.0",min) nails at 6" o.c. Reinforcing member is a minimum 80% of web member length.

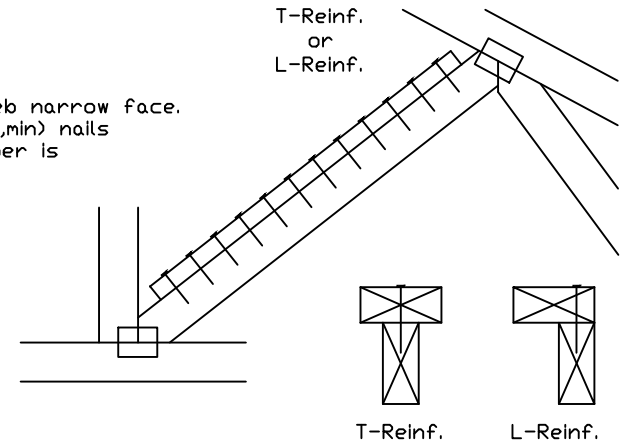

Scab Reinforcement:

Apply scab(s) to wide face of web. No more than (1) scab per face. Attach with 10d (0.128"x3.0",min) nails at 6" o.c. Reinforcing member is a minimum 80% of web member length.

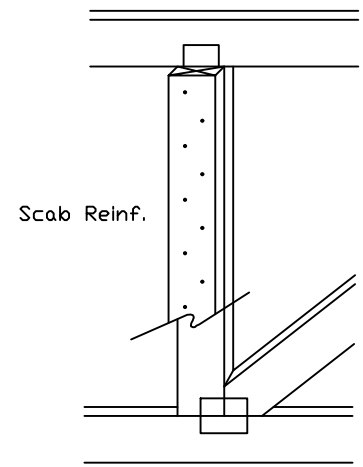

YOONHWAK KIM
LICENSE
No. 86367
STATE OF FLORIDA
PROFESSIONAL ENGINEER

ALPINE
AN ITW COMPANY
514 Earth City Expressway
Suite 242
Earth City, MO 63045

****WARNING** READ AND FOLLOW ALL NOTES ON THIS DRAWING!**
****IMPORTANT** FURNISH THIS DRAWING TO ALL CONTRACTORS INCLUDING THE INSTALLERS.**

Trusses require extreme care in fabricating, handling, shipping, installing and bracing. Refer to and follow the latest edition of BCSI (Building Component Safety Information, by TPI and SBCA) for safety practices prior to performing these functions. Installers shall provide temporary bracing per BCSI. Unless noted otherwise, top chord shall have properly attached structural sheathing and bottom chord shall have a properly attached rigid ceiling. Locations shown for permanent lateral restraint of webs shall have bracing installed per BCSI sections B3, B7 or B10, as applicable. Apply plates to each face of truss and position as shown above and on the Joint Details, unless noted otherwise. Refer to drawings 160A-Z for standard plate positions.

Alpine, a division of ITW Building Components Group Inc. shall not be responsible for any deviation from this drawing, any failure to build the truss in conformance with ANSI/TPI 1, or for handling, shipping, installation & bracing of trusses.

A seal on this drawing or cover page listing this drawing, indicates acceptance of professional engineering responsibility solely for the design shown. The suitability and use of this drawing for any structure is the responsibility of the Building Designer per ANSI/TPI 1 Sec.2.

For more information see this job's general notes page and these web sites:
ALPINE: www.alpineitw.com; TPI: www.tpinst.org; SBCA: www.sbcindustry.org; ICC: www.iccsafe.org

TC LL		PSF
TC DL		PSF
BC DL		PSF
BC LL		PSF
TOT. LD.		PSF
DUR. FAC.		
SPACING		

REF	CLR Subst.
DATE	01/02/19
DRWG	BRCLBSUB0119

Gable Stud Reinforcement Detail

ASCE 7-10: 140 mph Wind Speed, 15' Mean Height, Enclosed, Exposure C, Kzt = 1.00

Or: 120 mph Wind Speed, 15' Mean Height, Partially Enclosed, Exposure C, Kzt = 1.00
Or: 120 mph Wind Speed, 15' Mean Height, Enclosed, Exposure D, Kzt = 1.00
Or: 100 mph Wind Speed, 15' Mean Height, Partially Enclosed, Exposure D, Kzt = 1.00

Max Gable Vertical Length	2x4 Gable Vertical Spacing	Species	Brace Grade	No Braces	(1) 1x4 'L' Brace * Group A	(1) 1x4 'L' Brace * Group B	(1) 2x4 'L' Brace * Group A	(1) 2x4 'L' Brace * Group B	(2) 2x4 'L' Brace ** Group A	(2) 2x4 'L' Brace ** Group B	(1) 2x6 'L' Brace * Group A	(1) 2x6 'L' Brace * Group B	(2) 2x6 'L' Brace ** Group A	(2) 2x6 'L' Brace ** Group B
	24" o.c.	SPF HF	#1 / #2	4' 3"	7' 3"	7' 7"	8' 7"	8' 11"	10' 3"	10' 8"	13' 6"	14' 0"	14' 0"	14' 0"
			#3	4' 1"	6' 7"	7' 1"	8' 6"	8' 10"	10' 1"	10' 6"	13' 4"	13' 10"	14' 0"	14' 0"
			Stud	4' 1"	6' 7"	7' 0"	8' 6"	8' 10"	10' 1"	10' 6"	13' 4"	13' 10"	14' 0"	14' 0"
			Standard	4' 1"	5' 8"	6' 0"	7' 7"	8' 1"	10' 1"	10' 6"	11' 10"	12' 8"	14' 0"	14' 0"
		SP DFL	#1	4' 6"	7' 4"	7' 8"	8' 8"	9' 0"	10' 4"	10' 9"	13' 8"	14' 0"	14' 0"	14' 0"
			#2	4' 3"	7' 3"	7' 7"	8' 7"	8' 11"	10' 3"	10' 8"	13' 6"	14' 0"	14' 0"	14' 0"
			#3	4' 2"	6' 0"	6' 4"	7' 11"	8' 6"	10' 2"	10' 7"	12' 5"	13' 4"	14' 0"	14' 0"
			Stud	4' 2"	6' 0"	6' 4"	7' 11"	8' 6"	10' 2"	10' 7"	12' 5"	13' 4"	14' 0"	14' 0"
			Standard	4' 0"	5' 3"	5' 7"	7' 0"	7' 6"	9' 6"	10' 2"	11' 0"	11' 10"	14' 0"	14' 0"
	16" o.c.	SPF HF	#1 / #2	4' 11"	8' 4"	8' 8"	9' 10"	10' 3"	11' 8"	12' 2"	14' 0"	14' 0"	14' 0"	14' 0"
			#3	4' 8"	8' 1"	8' 8"	9' 8"	10' 1"	11' 7"	12' 1"	14' 0"	14' 0"	14' 0"	14' 0"
			Stud	4' 8"	8' 1"	8' 6"	9' 8"	10' 1"	11' 7"	12' 1"	14' 0"	14' 0"	14' 0"	14' 0"
			Standard	4' 8"	6' 11"	7' 5"	9' 3"	9' 11"	11' 7"	12' 1"	14' 0"	14' 0"	14' 0"	14' 0"
		SP DFL	#1	5' 1"	8' 5"	8' 9"	9' 11"	10' 4"	11' 10"	12' 4"	14' 0"	14' 0"	14' 0"	14' 0"
			#2	4' 11"	8' 4"	8' 8"	9' 10"	10' 3"	11' 8"	12' 2"	14' 0"	14' 0"	14' 0"	14' 0"
			#3	4' 9"	7' 4"	7' 9"	9' 9"	10' 2"	11' 8"	12' 1"	14' 0"	14' 0"	14' 0"	14' 0"
			Stud	4' 9"	7' 4"	7' 9"	9' 9"	10' 2"	11' 8"	12' 1"	14' 0"	14' 0"	14' 0"	14' 0"
			Standard	4' 8"	6' 5"	6' 10"	8' 7"	9' 2"	11' 7"	12' 1"	13' 6"	14' 0"	14' 0"	14' 0"
	12" o.c.	SPF HF	#1 / #2	5' 5"	9' 2"	9' 6"	10' 10"	11' 3"	11' 8"	13' 5"	14' 0"	14' 0"	14' 0"	14' 0"
			#3	5' 1"	9' 0"	9' 4"	10' 8"	11' 1"	12' 9"	13' 3"	14' 0"	14' 0"	14' 0"	14' 0"
			Stud	5' 1"	9' 0"	9' 4"	10' 8"	11' 1"	12' 9"	13' 3"	14' 0"	14' 0"	14' 0"	14' 0"
			Standard	5' 1"	8' 0"	8' 6"	10' 8"	11' 1"	12' 9"	13' 3"	14' 0"	14' 0"	14' 0"	14' 0"
		SP DFL	#1	5' 8"	9' 3"	9' 8"	10' 11"	11' 4"	13' 0"	13' 6"	14' 0"	14' 0"	14' 0"	14' 0"
			#2	5' 5"	9' 2"	9' 6"	10' 10"	11' 3"	12' 11"	13' 5"	14' 0"	14' 0"	14' 0"	14' 0"
			#3	5' 3"	8' 5"	9' 0"	10' 9"	11' 2"	12' 10"	13' 4"	14' 0"	14' 0"	14' 0"	14' 0"
			Stud	5' 3"	8' 5"	9' 0"	10' 9"	11' 2"	12' 10"	13' 4"	14' 0"	14' 0"	14' 0"	14' 0"
			Standard	5' 1"	7' 5"	7' 11"	9' 11"	10' 7"	12' 9"	13' 3"	14' 0"	14' 0"	14' 0"	14' 0"

Bracing Group Species and Grades:

Group A:

Spruce-Pine-Fir

#1 / #2	Standard
#3	Stud

Hem-Fir

#2	Stud
#3	Standard

Douglas Fir-Larch

#3
Stud
Standard

Southern Pine***

#3
Stud
Standard

Group B:

Hem-Fir

#1 & Btr
#1

Douglas Fir-Larch

#1
#2

Southern Pine***

#1
#2

1x4 Braces shall be SRB (Stress-Rated Board).

***For 1x4 So. Pine use only Industrial 55 or Industrial 45 Stress-Rated Boards. Group B values may be used with these grades.

Gable Truss Detail Notes:

Wind Load deflection criterion is L/240.

Provide uplift connections for 55 plf over continuous bearing (5 psf TC Dead Load).

Gable end supports load from 4' 0" outlookers with 2' 0" overhang, or 12" plywood overhang.

Attach 'L' braces with 10d (0.128"x3.0" min) nails.

* For (1) 'L' brace: space nails at 2" o.c. in 18" end zones and 4" o.c. between zones.

** For (2) 'L' braces: space nails at 3" o.c. in 18" end zones and 6" o.c. between zones.

'L' bracing must be a minimum of 80% of web member length.

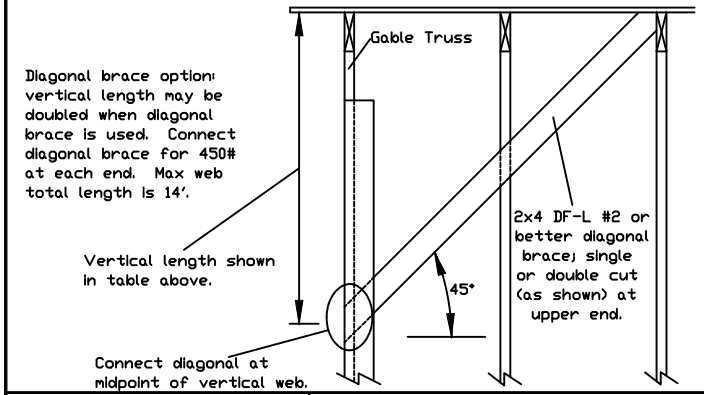

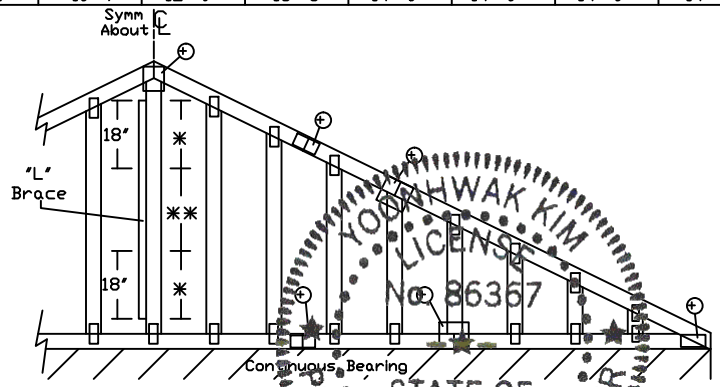

Refer to chart above for max gable vertical length.

Gable Vertical Plate Sizes

Vertical Length	No Splice
Less than 4' 0"	1X4 or 2X3
Greater than 4' 0"	3X4

+ Refer to common truss design for peak, splice, and heel plates.

Refer to the Building Designer for conditions not addressed by this detail.

YOONHWAK KIM LICENSE No. 86367 STATE OF FLORIDA PROFESSIONAL ENGINEER

ALPINE AN ITW COMPANY
514 Earth City Expressway
Suite 242
Earth City, MO 63045

WARNING READ AND FOLLOW ALL NOTES ON THIS DRAWING!
IMPORTANT FURNISH THIS DRAWING TO ALL CONTRACTORS INCLUDING THE INSTALLERS.

Trusses require extreme care in fabricating, handling, shipping, installing and bracing. Refer to and follow the latest edition of BCSI (Building Component Safety Information, by TPI and SBCA) for safety practices prior to performing these functions. Installers shall provide temporary bracing per BCSI. Unless noted otherwise, top chord shall have properly attached structural sheathing and bottom chord shall have a properly attached rigid ceiling. Locations shown for permanent lateral restraint of webs shall have bracing installed per BCSI sections B3, B7 or B10, as applicable. Apply plates to each face of truss and position as shown above and on the Joint Details, unless noted otherwise. Refer to drawings 160A-Z for standard plate positions.

Alpine, a division of ITW Building Components Group Inc. shall not be responsible for any deviation from this drawing, any failure to build the truss in conformance with ANSI/TPI 1, or for handling, shipping, installation & bracing of trusses.

A seal on this drawing or cover page listing this drawing, indicates acceptance of professional engineering responsibility solely for the design shown. The suitability and use of this drawing for any structure is the responsibility of the Building Designer per ANSI/TPI 1 Sec.2.

For more information see this job's general notes page and these web sites:
ALPINE: www.alpineitw.com; TPI: www.tpinst.org; SBCA: www.sbcindustry.org; ICC: www.icc-safe.org

MAX. TOT. LD. 60 PSF

MAX. SPACING 24.0"

REF	ASCE7-10-GAB14015
DATE	10/01/14
DRWG	A14015ENC101014

Gable Detail

For Let-in Verticals

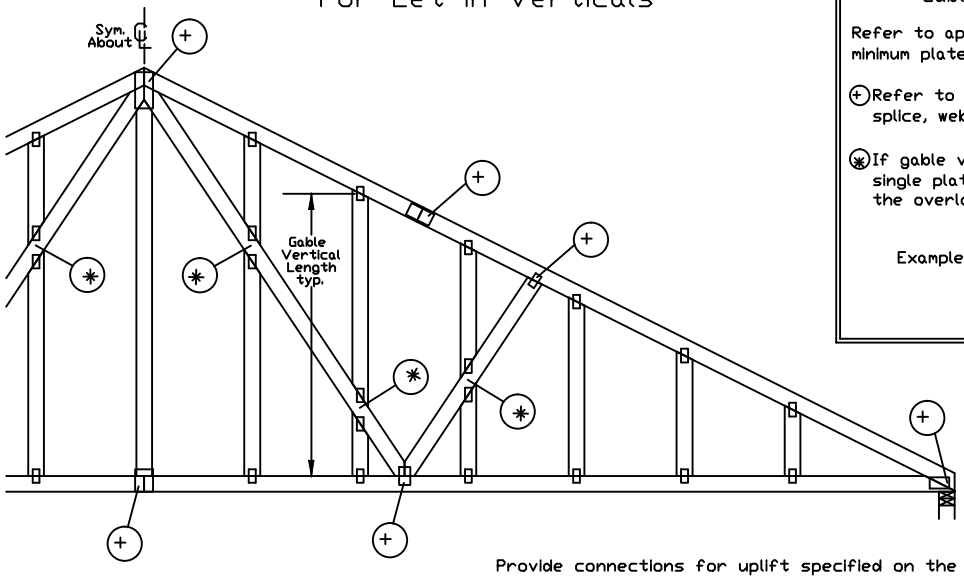

Gable Truss Plate Sizes

Refer to appropriate Alpine gable detail for minimum plate sizes for vertical studs.

(+) Refer to Engineered truss design for peak, splice, web, and heel plates.

(✱) If gable vertical plates overlap, use a single plate that covers the total area of the overlapped plates to span the web.

Example:

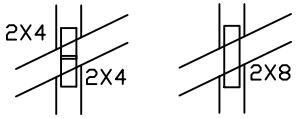

"T" Reinforcement Attachment Detail

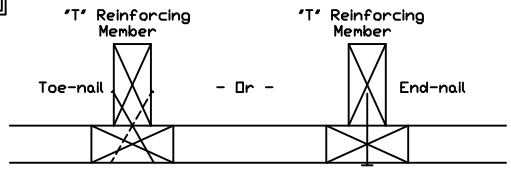

Provide connections for uplift specified on the engineered truss design.

Attach each "T" reinforcing member with

End Driven Nails:
10d Common (0.148"x 3.",min) Nails at 4" o.c. plus
(4) nails in the top and bottom chords.

Toenailed Nails:
10d Common (0.148"x3",min) Toenails at 4" o.c. plus
(4) toenails in the top and bottom chords.

This detail to be used with the appropriate Alpine gable detail for ASCE wind load.

ASCE 7-05 Gable Detail Drawings
A13015051014, A12015051014, A11015051014, A10015051014, A14015051014,
A13030051014, A12030051014, A11030051014, A10030051014, A14030051014

ASCE 7-10 & ASCE 7-16 Gable Detail Drawings
A11515ENC100118, A12015ENC100118, A14015ENC100118, A16015ENC100118,
A18015ENC100118, A20015ENC100118, A20015END100118, A20015PED100118,
A11530ENC100118, A12030ENC100118, A14030ENC100118, A16030ENC100118,
A18030ENC100118, A20030ENC100118, A20030END100118, A20030PED100118,
S11515ENC100118, S12015ENC100118, S14015ENC100118, S16015ENC100118,
S18015ENC100118, S20015ENC100118, S20015END100118, S20015PED100118,
S11530ENC100118, S12030ENC100118, S14030ENC100118, S16030ENC100118,
S18030ENC100118, S20030ENC100118, S20030END100118, S20030PED100118

See appropriate Alpine gable detail for maximum unreinforced gable vertical length.

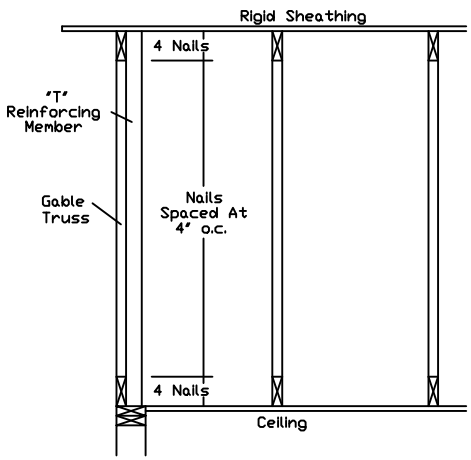

To convert from "L" to "T" reinforcing members, multiply "T" increase by length (based on appropriate Alpine gable detail).

Maximum allowable "T" reinforced gable vertical length is 14' from top to bottom chord.

"T" reinforcing member material must match size, specie, and grade of the "L" reinforcing member.

Web Length Increase w/ "T" Brace

"T" Reinf. Mbr. Size	"T" Increase
2x4	30 %
2x6	20 %

Example:
ASCE 7-10 Wind Speed = 120 mph
Mean Roof Height = 30 ft, Kzt = 1.00
Gable Vertical = 24"o.c. SP #3
"T" Reinforcing Member Size = 2x4
"T" Brace Increase (From Above) = 30% = 1.30
(1) 2x4 "L" Brace Length = 8' 7"
Maximum "T" Reinforced Gable Vertical Length
1.30 x 8' 7" = 11' 2"

YOONHWAK KIM
LICENSE NUMBER 86367
STATE OF FLORIDA
PROFESSIONAL ENGINEER

ALPINE
AN ITW COMPANY
514 Earth City Expressway
Suite 242
Earth City, MO 63045

WARNING READ AND FOLLOW ALL NOTES ON THIS DRAWING!
IMPORTANT FURNISH THIS DRAWING TO ALL CONTRACTORS INCLUDING THE INSTALLERS.

Trusses require extreme care in fabricating, handling, shipping, installing and bracing. Refer to and follow the latest edition of BCSI (Building Component Safety Information, by TPI and SBCA) for safety practices prior to performing these functions. Installers shall provide temporary bracing per BCSI. Unless noted otherwise, top chord shall have properly attached structural sheathing and bottom chord shall have a properly attached rigid ceiling. Locations shown for permanent lateral restraint of webs shall have bracing installed per BCSI sections B3, B7 or B10, as applicable. Apply plates to each face of truss and position as shown above and on the Joint Details, unless noted otherwise. Refer to drawings 160A-Z for standard plate positions.

Alpine, a division of ITW Building Components Group Inc. shall not be responsible for any deviation from this drawing, any failure to build the truss in conformance with ANSI/TPI 1, or for handling, shipping, installation & bracing of trusses.

A seal on this drawing or cover page listing this drawing, indicates acceptance of professional engineering responsibility solely for the design shown. The suitability and use of this drawing for any structure is the responsibility of the Building Designer per ANSI/TPI 1 Sec.2.

For more information see this job's general notes page and these web sites: ALPINE: www.alpineitw.com; TPI: www.tpinst.org; SBCA: www.sbcindustry.org; ICC: www.icc-safe.org

REF	LET-IN VERT
DATE	01/02/2018
DRWG	GBLLETIN0118

MAX. TOT. LD. 60 PSF
DUR. FAC. ANY
MAX. SPACING 24.0"

Piggyback Detail - ASCE 7-10: 160 mph, 30' Mean Height, Enclosed, Exposure C, Kzt=1.00

160 mph Wind, 30.00 ft Mean Hgt, ASCE 7-10, Enclosed Bldg. located anywhere in roof, Exp C, Wind DL= 5.0 psf (min), Kzt=1.0.
Or 140 mph wind, 30.00 ft Mean Hgt, ASCE 7-10, Enclosed Bldg. located anywhere in roof, Exp D, wind DL= 5.0 psf (min), Kzt=1.0.

Note: Top chords of trusses supporting piggyback cap trusses must be adequately braced by sheathing or purlins. The building Engineer of Record shall provide diagonal bracing or any other suitable anchorage to permanently restrain purlins, and lateral bracing for out of plane loads over gable ends.

Maximum truss spacing is 24" o.c. detail is not applicable if cap supports additional loads such as cupola, steeple, chimney or drag strut loads.

** Refer to Engineer's sealed truss design drawing for piggyback and base truss specifications.

Detail A : Purlin Spacing = 24" o.c. or less

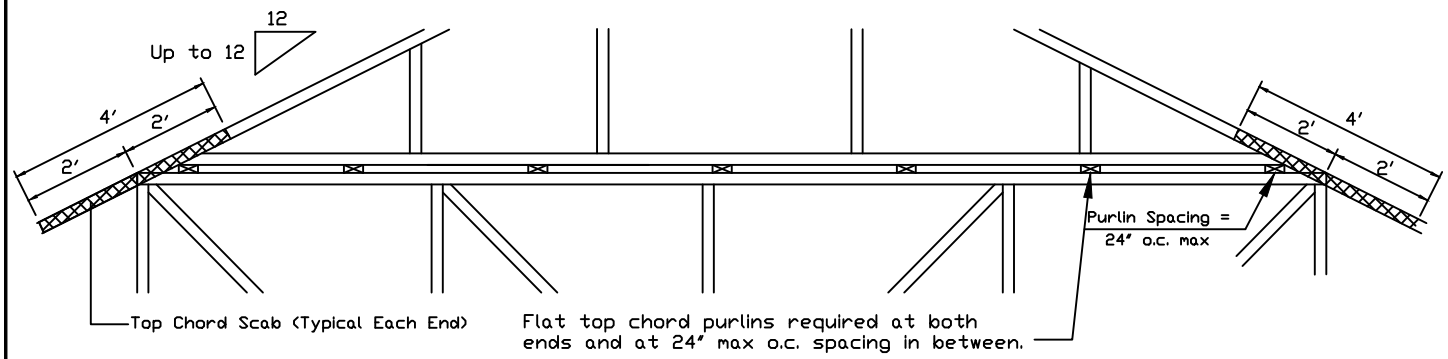

Piggyback cap truss slant nailed to all top chord purlin bracing with (2) 16d box nails (0.135"x3.5") and secure top chord with 2x4 #3 grade scab (1 side only at each end) attached with 2 rows of 10d box nails (0.128"x3") at 4" o.c.

Attach purlin bracing to the flat top chord using (2) 16d box nails (0.135"x3.5").

The top chord #3 grade 2x4 scab may be replaced with either of the following: (1) 3X8 Trulox plate attached with (8) 0.120"x1.375" nails, (4) into cap TC & (4) into base truss TC or (1) 28PB wave piggyback plate plated to the piggyback truss TC and attached to the base truss TC with (4) 0.120"x1.375" nails. Note: Nailing thru holes of wave plate is acceptable.

Detail B : Purlin Spacing > 24" o.c.

Piggyback cap truss slant nailed to all top chord purlin bracing with (2) 16d box nails (0.135"x3.5") and secure top chord with 2x4 #3 grade scab (1 side only at each end) attached with 2 rows of 10d box nails (0.128"x3") at 4" o.c.

Attach purlin bracing to the flat top chord using a minimum of (2) 16d box nails (0.135"x3.5").

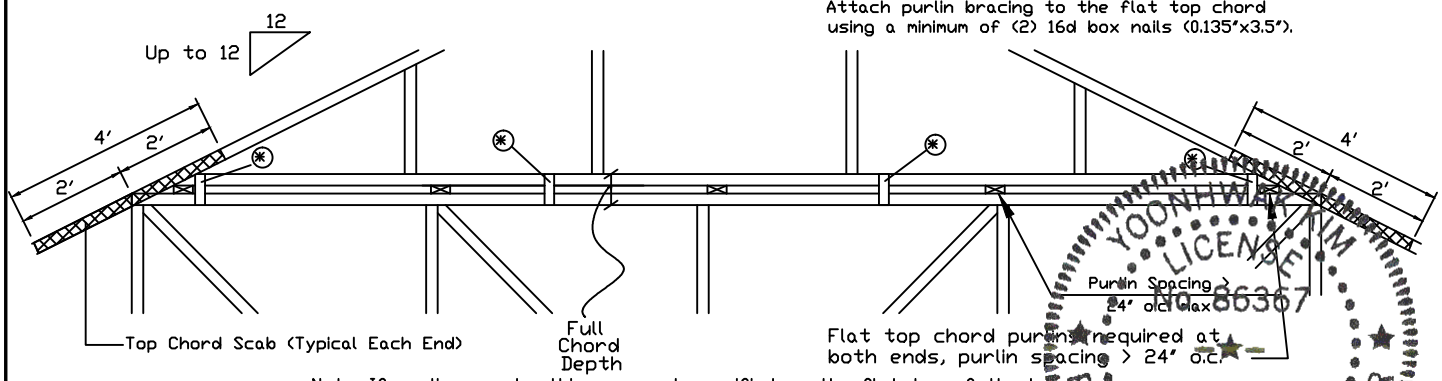

Note: If purlins or sheathing are not specified on the flat top of the base truss, purlins must be installed at 24" o.c. max. and use Detail A.

* In addition, provide connection with one of the following methods:

Trulox
Use 3X8 Trulox plates for 2x4 chord member, and 3X10 Trulox plates for 2x6 and larger chord members. Attach to each face @ 8" o.c. with (4) 0.120"x1.375" nails into cap bottom chord and (4) in base truss top chord. Trulox plates may be staggered 4" o.c. front to back faces.

APA Rated Gusset
8"x8"x7/16" (min) APA rated sheathing gussets (each face). Attach @ 8" o.c. with (8) 6d common (0.113"x2") nails per gusset, (4) in cap bottom chord and (4) in base truss top chord. Gussets may be staggered 4" o.c. front to back faces.

2x4 Vertical Scabs
2x4 SPF #2, full chord depth scabs (each face). Attach @ 8" o.c. with (6) 10d box nails (0.128"x3") per scab, (3) in cap bottom chord and (3) in base truss top chord. Scabs may be staggered 4" o.c. front to back faces.

28PB Wave Piggyback Plate
One 28PB wave piggyback plate to each face @ 8" o.c. Attach teeth to piggyback at time of fabrication. Attach to supporting truss with (4) 0.120"x1.375" nails per face per ply. Piggyback plates may be staggered 4" o.c. front to back faces.

YOONHWAK KIM
LICENSE
No 86367
STATE OF FLORIDA
PROFESSIONAL ENGINEER

ALPINE
AN ITW COMPANY
514 Earth City Expressway
Suite 242
Earth City, MO 63045

WARNING READ AND FOLLOW ALL NOTES ON THIS DRAWING!
IMPORTANT FURNISH THIS DRAWING TO ALL CONTRACTORS INCLUDING THE INSTALLERS.

Trusses require extreme care in fabricating, handling, shipping, installing and bracing. Refer to and follow the latest edition of BCSI (Building Component Safety Information, by TPI and SBCA) for safety practices prior to performing these functions. Installers shall provide temporary bracing per BCSI. Unless noted otherwise, top chord shall have properly attached structural sheathing and bottom chord shall have a properly attached rigid ceiling. Locations shown for permanent lateral restraint of webs shall have bracing installed per BCSI sections B3, B7 or B10, as applicable. Apply plates to each face of truss and position as shown above and on the Joint Details, unless noted otherwise. Refer to drawings 160A-Z for standard plate positions.

Alpine, a division of ITW Building Components Group Inc. shall not be responsible for any deviation from this drawing, any failure to build the truss in conformance with ANSI/TPI 1, or for handling, shipping, installation & bracing of trusses.

A seal on this drawing or cover page listing this drawing, indicates acceptance of professional engineering responsibility solely for the design shown. The suitability and use of this drawing for any structure is the responsibility of the Building Designer per ANSI/TPI 1 Sec.2.

For more information see this job's general notes page and these web sites:
ALPINE: www.alpineitw.com; TPI: www.tpinst.org; SBCA: www.sbcindustry.org; ICC: www.iccsafe.org

REF	PIGGYBACK
DATE	10/01/14
DRWG	PB160101014
SPACING	24.0"

Valley Detail - ASCE 7-10: 160 mph, 30' Mean Height, Enclosed, Exp. C, Kzt=1.00

Top Chord 2x4 SP #2N, SPF #1/#2, DF-L #2 or better.
Bot Chord 2x4 SP #2N or SPF #1/#2 or better.
Webs 2x4 SP #3, SPF #1/#2, DF-L #2 or better.

** Attach each valley to every supporting truss with:
(2) 16d box (0.135" x 3.5") nails toe-nailed for
ASCE 7-10 160 mph. 30' Mean Height, Enclosed
Building, Exp. C, Wind TC DL=5 psf, Kzt = 1.00
Or
ASCE 7-10 140 mph. 30' Mean Height, Enclosed
Building, Exp. D, Wind TC DL=5 psf, Kzt = 1.00

Bottom chord may be square or pitched cut as shown.

Valleys short enough to be cut as solid triangular members from a single 2x6, or larger as required, shall be permitted in lieu of fabricating from separate 2x4 members.

All plates shown are ITW BCG Wave Plates.

Unless specified otherwise on engineer's sealed design, for vertical valley webs taller than 7-9" apply 2x4 "T" reinforcement, 80% length of web, same species and grade or better, attached with 10d box (0.128" x 3.0") nails at 6" o.c. In lieu of "T" reinforcement, 2x4 Continuous Lateral Restraint applied at mid-length of web is permitted with diagonal bracing as shown in DRWG BRCLBANC1014.

Top chord of truss beneath valley set must be braced with:
properly attached, rated sheathing applied prior to valley truss installation.
Or
Purlins at 24" o.c. or as otherwise specified on engineer's sealed design
Or
By valley trusses used in lieu of purlin spacing as specified on Engineer's sealed design.

*** Note that the purlin spacing for bracing the top chord of the truss beneath the valley is measured along the slope of the top chord.

++ Larger spans may be built as long as the vertical height does not exceed 14'-0".

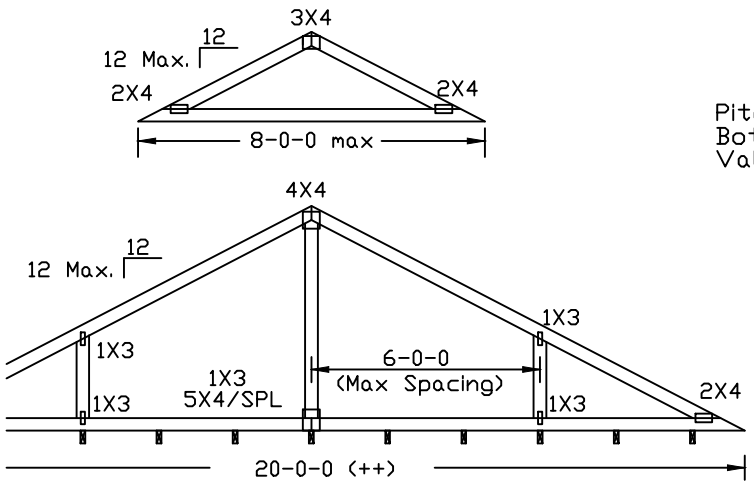

Supporting trusses at 24" o.c. maximum spacing.

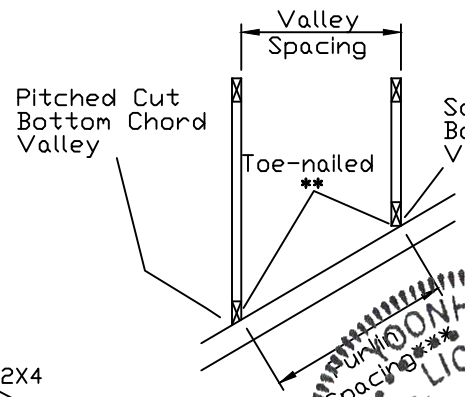

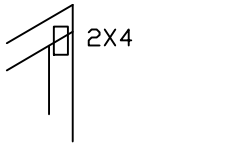

Square Cut Bottom Chord Valley

Stubbed Valley End Detail

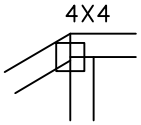

Optional Hip Joint Detail

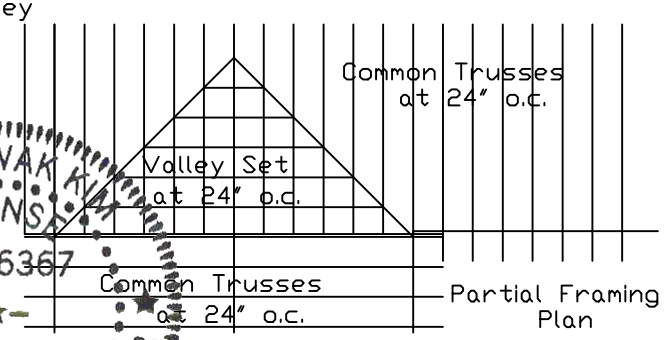

Partial Framing Plan

YOONHWAK KIM
LICENSE
No. 86367
STATE OF
FLORIDA
PROFESSIONAL ENGINEER

ALPINE
AN ITW COMPANY
514 Earth City Expressway
Suite 242
Earth City, MO 63045

WARNING READ AND FOLLOW ALL NOTES ON THIS DRAWING!
IMPORTANT FURNISH THIS DRAWING TO ALL CONTRACTORS INCLUDING THE INSTALLERS.

Trusses require extreme care in fabricating, handling, shipping, installing and bracing. Refer to and follow the latest edition of BCSI (Building Component Safety Information, by TPI and SBCA) for safety practices prior to performing these functions. Installers shall provide temporary bracing per BCSI. Unless noted otherwise, top chord shall have properly attached structural sheathing and bottom chord shall have a properly attached rigid ceiling. Locations shown for permanent lateral restraint of webs shall have bracing installed per BCSI sections B3, B7 or B10, as applicable. Apply plates to each face of truss and position as shown above and on the Joint Details, unless noted otherwise. Refer to drawings 160A-Z for standard plate positions.

Alpine, a division of ITW Building Components Group Inc. shall not be responsible for any deviation from this drawing, any failure to build the truss in conformance with ANSI/TPI 1, or for handling, shipping, installation & bracing of trusses.

A seal on this drawing or cover page listing this drawing, indicates acceptance of professional engineering responsibility solely for the design shown. The suitability and use of this drawing for any structure is the responsibility of the Building Designer per ANSI/TPI 1 Sec.2.

For more information see this job's general notes page and these web sites: ALPINE: www.alpineitw.com; TPI: www.tpinst.org; SBCA: www.sbcindustry.org; ICC: www.iccsafe.org

TC LL	30	30	40PSF	
TC DL	20	15	7PSF	
BC DL	10	10	10 PSF	
BC LL	0	0	0PSF	
TOT. LD.	60	55	57PSF	
DUR.FAC.	1.25/1.33	1.15	1.15	
SPACING		24.0"		

REF	VALLEY DETAIL
DATE	10/01/2014
DRWG	VAL160101014

12/23/2020