COMM SW COR OF NE1/4, RUN N
400 FT, SE 2508.45 FT FOR POB,
CONT SE 210 FT, S 1520.78 FT

KORN ROBERT A/KORN STACEY L
P O BOX 1501
HIGH SPRINGS, FL 32655-1501

2023

36-7S-16-04351-007

COLUMBIA COUNTY PROPERTY

BUILDING CHARACTERISTICS

ELEMENT	CD	CONSTRUCTION
Exterior Wall	12	CEDAR 100
Roof Structur	03	GABLE/HIP 100
Roof Cover	03	COMP SHNGL 100
Interior Wall	04	PLYWOOD 100
Interior Floo	14	CARPET 90
Interior Floo	12	HARDWOOD 10
Air Condition	03	CENTRAL 100
Heating Type	04	AIR DUCTED 100
Bedrooms		3 100
Bathrooms		2 100
Frame	01	NONE 100
Stories	1.	1. 100
Architectual	05	CONV 100
Units		0 100
Condition Adj	03	03 100
Kitchen Adjus	01	01 100
Quality	05	05
DOR CODE	0100	SINGLE FAMILY
MAP NUM		MKT AREA 02
NEIGHBORHOOD/LOC	36716.00	1.00/

AREA TYPE	TOTAL GROSS AREA	PCT OF BASE	TOT ADJ AREA	SUBAREA MARKET VALUE
BAS	1,024	100	1,024	56,363
BAS	1,820	100	1,820	100,177
FCP	440	25	110	6,055
FOP	49	30	15	826
FOP	140	30	42	2,312
FOP	256	30	77	4,238
FSP	560	40	224	12,329
FST	105	55	58	3,192
TOTALS	4,394		3,370	185,492

MARKET ADJUSTMENTS

TYPE	MDL	EFF. AREA	TOT ADJ PTS	EFF. BASE RATE	REPL. COST NEW	AYB	EYB	ECON	FNCT		NORM	% COND
0100	01	3,370	102.0300	84.68	285,372	1968	1985	0	0	0	35.00	65.00

1 SINGLE FAM – 100% - 2001 HX Base Yr 2001

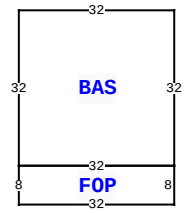

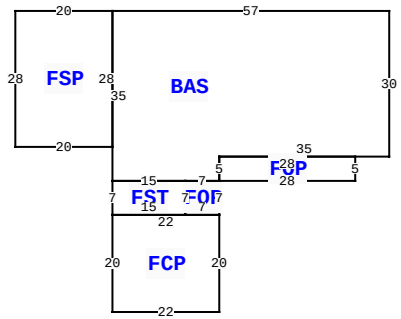

102 SW LANGELIER DR, FORT WHITE

BLD DATE		LGL DATE	
XF DATE		LAND DATE	03/31/2022 MLU
INC DATE		AG DATE	

VALUATION SUMMARY

VALUATION BY		STANDARD
Tax Group: 3	Tax Dist:	
BUILDING MARKET VALUE		185,492
TOTAL MARKET OB/XF VALUE		1,398
TOTAL LAND VALUE - MARKET		95,550
TOTAL MARKET VALUE		282,440
SOH/AGL Deduction		50,843
ASSESSED VALUE		231,597
TOTAL EXEMPTION VALUE	HX HB	50,000
BASE TAXABLE VALUE		181,597
TOTAL JUST VALUE		282,440
NCON VALUE		0
INCOME VALUE		
PREVIOUS YEAR MKT VALUE		

PERMIT NUM	DESCRIPTION	AMT	ISSUED
25903	SFR	332	06/07/2007

SALES DATA

OFF RECORD Number	DATE	TYPE INST	Q U	V I	RSN CD	SALE PRICE
0910/0173	8/30/2000	WD	Q	I		113,600
GRANTOR: ROBEY						
GRANTEE: ROBERT & STACEY KOR						
0654/0494	6/03/1988	WD	U	I	01	100
GRANTOR: J RALPH KIRKLAND						
GRANTEE: SANCY K ROBEY & J R						

BUILDING NOTES

BUILDING DIMENSIONS

BAS= W57 FSP= W20 S28 E20 N28$ S35 FST= S7 FCP= S20 E22 N20 W22$ E15 N7 W15$ E15 FOP= S7 E7 N7 W7$ E7 FOP= E28 N5 W28 S5$ N5 E35 N30$ PTR= N40 BAS= N32 W32 S32 E32$ FOP= W32 S8 E32 N8$ S40$.

EXTRA FEATURES

LN	OB/XF CODE	DESCRIPTION	BLD	CAP	L	W	UNITS	UT	Adj R	ADJ UNIT PRICE	ORIG COND	YEAR ON	YEAR ACTUAL	Q	% COND	OB/XF MKT VALUE	NOTES
1	0296	SHED METAL	0	100	0	0	1.00	UT	0.00	0.00	100	2010	2010	3	100	50	
2	0296	SHED METAL	0	100	0	0	1.00	UT	0.00	0.00	100	2010	2010	3	100	500	
3	0296	SHED METAL	0	100	0	0	1.00	UT	0.00	0.00	100	2010	2010	3	100	500	
4	0084	DOCK-RIVER	0	100	10	12	120.00	UT	14.50	14.50	20	2010	2010	3	20	348	

LAND DESCRIPTION

TOTAL OB/XF 1,398

LN	USE CODE	LAND USE DESCRIPTION	CAP	RD	LOC ZONE	FRONT	DEPTH	TOT LND UTS	UNIT TYPE	DT	DPTH FACT	% COND	TOT ADJ	UNIT PRICE	ADJ UNIT PRICE	LAND VALUE	OTHER ADJUSTMENTS AND NOTES	YEAR	DENSITY	DECL	FRZ	YR	CONSRV
1	0132	SFR RIVER	100		00	0.00	0.00	7.35	AC		1.00	1.00	1.00	13,000.00	13,000.00	95,550							

REVIEW DATE 07/14/2015 BY DFRP Total Acres: 7.35 Total Land Value: 95,550 Market: 0 Agricultural: 0 Common: 95,550 PRINTED 01/11/2023