ITW Building Components Group, Inc.

1950 Marley Drive Haines City, FL 33844
Florida Engineering Certificate of Authorization Number 0 278
Florida Certificate of Product Approval # FL1999
Page 1 of 1 Document ID 1UZ6215-Z0128121608

WILLIAM H. KRICK LICENSE No. 70861 STATE OF FLORIDA PROFESSIONAL ENGINEER
08/28/2013

Truss Fabricator	W.B. Howland
Job Identification	8320-/SMITH RES.--LAKE CITY /S&S CONSTRUCTION -- LAKE CITY, FL
Truss Count	40
Model Code	Florida Building Code 2010
Truss Criteria.	FBC2010Res/TPI-2007(STD)
Engineering Software	Alpine Software,Version 12.03.
Structural Engineer of Record	The identity of the structural EOR did not exist as of
Address	the seal date per section 61G15-31.003(5a) of the FAC
Minimum Design Loads	Roof - 40.0 PSF @ 1.25 Duration
	Floor - N/A
	Wind - 130 MPH ASCE 7-10 -Closed

Notes

1. Determination as to the suitability of these truss components for the structure is the responsibility of the building designer/engineer of record, as defined in ANSI/TPI 1
2. The drawing date shown on this index sheet must match the date shown on the individual truss component drawing.
3. As shown on attached drawings; the drawing number is preceded by: HCUSR215

William H Krick
-Truss Design Engineer-

1950 Marley Drive
Haines City, FL 33844

Details: 14030EC1-GBLLETIN-PB16010-PB16010-14015EC1-BRCLBSUB-CNNAILSP-

#	Ref Description	Drawing#	Date
1	62506--A1	13240001	08/28/13
2	62507--A2	13240038	08/28/13
3	62508--A3	13240039	08/28/13
4	62509--A4	13240036	08/28/13
5	62510--A5	13240016	08/28/13
6	62511--A6	13240017	08/28/13
7	62512--A7	13240018	08/28/13
8	62513--A8	13240019	08/28/13
9	62514--A9	13240020	08/28/13
10	62515--A10	13240021	08/28/13
11	62516--A11	13240022	08/28/13
12	62517--B1	13240023	08/28/13
13	62518--B2	13240002	08/28/13
14	62519--B3G	13240032	08/28/13
15	62520--B4	13240003	08/28/13
16	62521--B5	13240004	08/28/13
17	62522--B6G	13240033	08/28/13
18	62523--C1	13240005	08/28/13
19	62524--C2	13240034	08/28/13
20	62525--D1	13240006	08/28/13
21	62526--D2	13240007	08/28/13
22	62527--D3	13240031	08/28/13
23	62528--D4	13240024	08/28/13
24	62529--D5	13240025	08/28/13
25	62530--D6	13240026	08/28/13
26	62531--D7	13240027	08/28/13
27	62532--D8	13240028	08/28/13
28	62533--D9	13240035	08/28/13
29	62534--D10	13240029	08/28/13
30	62535--D11	13240040	08/28/13
31	62536--D12	13240037	08/28/13
32	62537--J1	13240030	08/28/13
33	62538--J2	13240008	08/28/13
34	62539--J3	13240009	08/28/13
35	62540--J4	13240010	08/28/13
36	62541--J5G	13240011	08/28/13
37	62542--J6G	13240012	08/28/13
38	62543--J7G	13240013	08/28/13
39	62544--J8	13240014	08/28/13
40	62545--J9G	13240015	08/28/13

COLUMBIA COUNTY BUILDING DEPARTMENT
Received for FILE COPY
Code Compliance
PLANS EXAMINER

(8320-/SMITH RES.--LAKE CITY /S&S CONSTRUCTION -- LAKE CITY, FL - A1)

Top chord 2x4 SP 2400f-2.0E
Bot chord 2x4 SP 2400f-2.0E
Webs 2x4 SP 2400f-2.0E

130 mph wind, 24.16 ft mean hgt, ASCE 7-10, CLOSED bldg, Located anywhere in roof, RISK CAT II, EXP B, wind TC DL=5.0 psf, wind BC DL=2.0 psf. GCpi(+/-)=0.18

Wind loads and reactions based on MWFRS with additional C&C member design.

Deflection meets L/240 live and L/180 total load Creep increase factor for dead load is 1.50.

See Detail PB160100212 for piggyback details.

Special loads
------(Lumber Dur.Fac.=1.25 / Plate Dur.Fac.=1.25)
TC- From 60 plf at -0.63 to 60 plf at 5.45
TC- From 60 plf at 5.45 to 60 plf at 11.53
BC- From 4 plf at -0.63 to 4 plf at 11.53

Gable end supports 8" max rake overhang.

See DWGS A14030ENC100212 & GBLLETIN0212 for more requirements.

In lieu of rigid ceiling use purlins to brace BC @ 24" OC.

The overall height of this truss excluding overhang is 5-1-1.

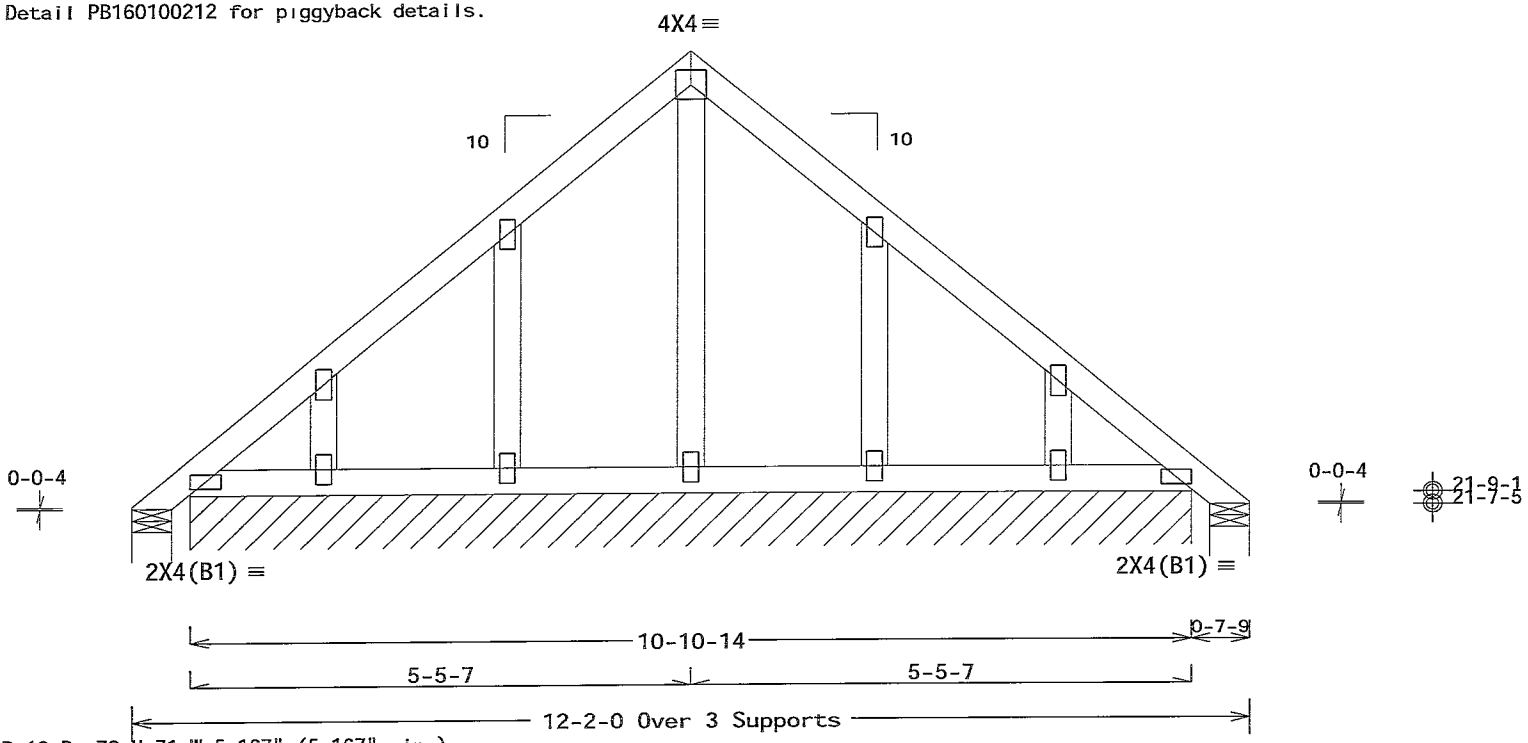

R=16 Rw=78 U=71 W=5.167" (5 167" min.)
RL=107/-107

R=66 PLF U=18 PLF W=10-10-14

R=16 U=0 W=5.168" (5 168" min.)

Note: All Plates Are 2X4 Except As Shown.

Design Crit: FBC2010Res/TPI-2007(STD)
FT/RT=20%(0%)/10(0)

PLT TYP. Wave

WIND: ASCE 7-10 Wind Speed: 130 mph Exposure: B Enclosure: Closed Kzt: 1.00 Kzz: 0.85 Kh: 0.85 Kd: 0.85 Cp: 0.18 Iw: 1.00 Cc: 2.0 Pc: 1.0 Ps: 1.0 Pn: 1.0 Pf: 1.0 Pd: 1.0 Pt: 1.0 Pl: 1.0 Pg: 1.0 Ps: 1.0 Pr: 1.0 Pa: 1.0 Pb: 1.0 Pc: 1.0 Pd: 1.0 Pe: 1.0 Pf: 1.0 Pg: 1.0 Ph: 1.0 Pi: 1.0 Pj: 1.0 Pk: 1.0 Pl: 1.0 Pm: 1.0 Pn: 1.0 Po: 1.0 Pp: 1.0 Pq: 1.0 Pr: 1.0 Ps: 1.0 Pt: 1.0 Pu: 1.0 Pv: 1.0 Pw: 1.0 Px: 1.0 Py: 1.0 Pz: 1.0

FL/-/5/-/-/R/- Scale =.5"/Ft.

TC LL	20.0 PSF	REF	R215-- 62506
TC DL	10.0 PSF	DATE	08/28/13
BC DL	10.0 PSF	DRW	HCUSR215 13240001
BC LL	0.0 PSF	HC-ENG	KD/AP
TOT.LD.	40.0 PSF	SEQN-	380988
DUR.FAC.	1.25	FROM	CDM
SPACING	24.0"	JREF-	1UZ6215_Z01

ALPINE
ITW Building Components Group Inc.
Orlando FL, 32837
FL COA #0 278

WARNING READ AND FOLLOW ALL NOTES ON THIS SHEET!
IMPORTANT FURNISH THIS DESIGN TO ALL CONTRACTORS INCLUDING INSTALLERS

Trusses require extreme care in fabricating handling shipping installing and bracing Refer to and follow the latest edition of BCSI (Building Component Safety Information by TPI and WTCA) for safety practices prior to perform ng these functions Installers shall provide temporary bracing per BCSI. Unless noted otherwise top chord shall have properly attached structural sheathing and bottom chord shall have a properly attached rigid ceiling Locations shown for permanent lateral restraint of webs shall have bracing installed per BCSI sections B3 B7 or B10 as applicable

ITW Building Components Group Inc (ITWBCG) shall not be responsible for any deviation from this design, any failure to build the truss in conformance with ANSI/TPI 1 or for handling shipping installation and bracing of trusses Apply plates to each face of truss and position as shown above and on the drawing Details unless noted otherwise Refer to drawings 160A-Z for standard plate positions A seal on this drawing or cover page listing this drawing indicates acceptance of professional engineering responsibility solely for the design shown The suitability and use of this design for any structure is the responsibility of the Building Designer per ANSI/TPI 1 Sec 2 For more information see This job's general notes page ITW-BCG www itwbcg com TPI www tpinst org WTCA www sbcindustry com ICC www iccsafe org

WILLIAM H. KRICK
LICENSE
No. 70861
STATE OF FLORIDA
PROFESSIONAL ENGINEER
08/28/2013

(8320-/SMITH RES.--LAKE CITY /S&S CONSTRUCTION -- LAKE CITY, FL - A2)

Top chord 2x4 SP 2400f-2.0E
Bot chord 2x4 SP 2400f-2.0E
Webs 2x4 SP 2400f-2.0E

130 mph wind, 24.16 ft mean hgt, ASCE 7-10, CLOSED bldg, Located anywhere in roof, RISK CAT II, EXP B, wind TC DL=5.0 psf, wind BC DL=2.0 psf. GCpi(+/-)=0.18

Wind loads and reactions based on MWFRS with additional C&C member design.

Deflection meets L/240 live and L/180 total load. Creep increase factor for dead load is 1.50.

See Detail PB160100212 for piggyback details.

Design Dead Loads based on material weight adjusted for slope TC 1.00 PSF

Special loads
------(Lumber Dur.Fac.=1.25 / Plate Dur.Fac.=1.25)
TC- From 60 plf at -0.63 to 60 plf at 5.45
TC- From 60 plf at 5.45 to 60 plf at 11.53
BC- From 4 plf at -0.63 to 4 plf at 11.53

In lieu of rigid ceiling use purlins to brace BC @ 24" OC.

The overall height of this truss excluding overhang is 5-1-1.

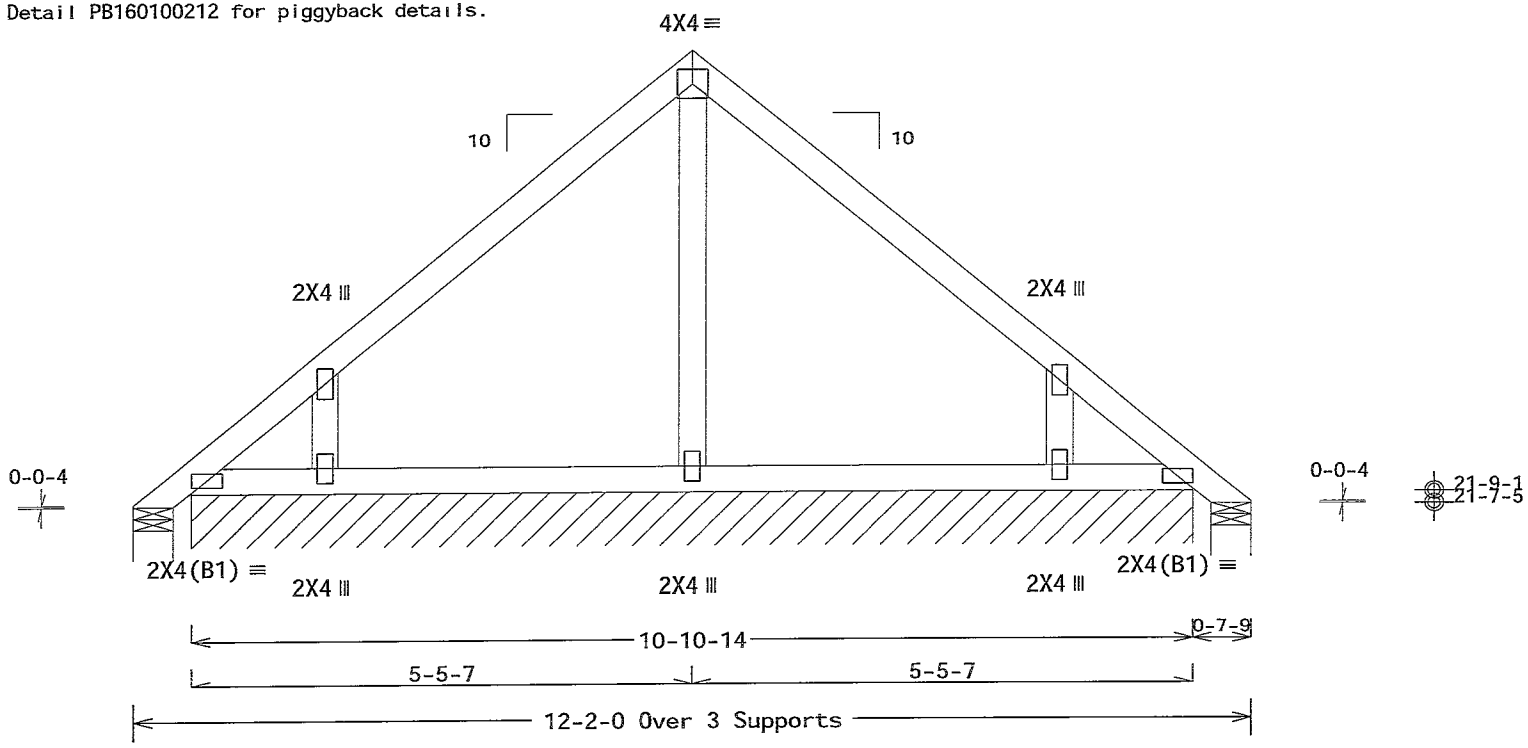

R=30 Rw=79 U=66 W=5 167" (5.167" min.)
RL=107/-107
R=64 PLF U=16 PLF W=10-10-14

R=30 U=10 W=5.168" (5 168" min.)

Design Crit: FBC2010Res/TPI-2007(STD)
FT/RT=20%(0%)/10(0)

PLT TYP. Wave

18.53:D3.0325.14

QTY:12 FL/-/5/-/-/R/-

Scale =.5"/Ft.

ALPINE
ITW Building Components Group Inc.
Orlando FL, 32837
FL COA #0 278

WARNING READ AND FOLLOW ALL NOTES ON THIS SHEET!
IMPORTANT FURNISH THIS DESIGN TO ALL CONTRACTORS INCLUDING INSTALLERS

Trusses require extreme care in fabricating handling shipping installing and bracing Refer to and follow the latest edition of BCSI (Building Component Safety Information by TPI and WTCA) for safety practices prior to performing these functions Installers shall provide temporary bracing per BCSI Unless noted otherwise top chord shall have properly attached structural sheathing and bottom chord shall have a properly attached rigid ceiling Locations shown for permanent lateral restraint of webs shall have bracing installed per BCSI sections B3 B7 or B10 as applicable

ITW Building Components Group Inc (ITWBCG) shall not be responsible for any deviation from this design, any failure to build the truss in conformance with ANSI/TPI 1 or for handling shipping installation & bracing of trusses Apply plates to each face of truss and position as shown above and on the joint Details unless noted otherwise Refer to drawings 160A-Z for standard plate positions A seal on this drawing or cover page listing this drawing indicates acceptance of professional engineering responsibility soleiy for the design shown The suitability and use of this design for any structure is the responsibility of the Building Designer per ANSI/TPI 1 Sec 2 For more information see: This job general notes page ITW-BCG www itwbcg com, TPI www tpinst org WTCA www sbcindustry com, ICC www iccsafe org

WILLIAM H. KRICK LICENSE No. 70861 STATE OF FLORIDA PROFESSIONAL ENGINEER
08/28/2013

TC LL	20.0 PSF	REF	R215-- 62507
TC DL	10.0 PSF	DATE	08/28/13
BC DL	10.0 PSF	DRW	HCUSR215 13240038
BC LL	0.0 PSF	HC-ENG	KD/AP
TOT.LD.	40.0 PSF	SEQN-	380990
DUR.FAC.	1.25	FROM	CDM
SPACING	24.0"	JREF-	1UZ6215_Z01

(8320-/SMITH RES.--LAKE CITY /S&S CONSTRUCTION -- LAKE CITY, FL - A3)

Top chord 2x4 SP 2400f-2.0E
Bot chord 2x4 SP 2400f-2.0E
Webs 2x4 SP 2400f-2.0E

Special loads
------(Lumber Dur.Fac.=1.25 / Plate Dur.Fac.=1.25)
TC- From 150 plf at -0.63 to 150 plf at 5.45
TC- From 150 plf at 5.45 to 150 plf at 11.53
BC- From 10 plf at -0.63 to 10 plf at 11.53

Wind loads and reactions based on MWFRS with additional C&C member design.

In lieu of structural panels or rigid ceiling use purlins to brace TC @ 24" OC, BC @ 24" OC.

The overall height of this truss excluding overhang is 5-1-1.

See Detail PB160100212 for piggyback details.

2 COMPLETE TRUSSES REQUIRED

Nail Schedule·0.131"x3", min. nails
Top Chord 1 Row @12.00" o.c.
Bot Chord· 1 Row @12.00" o.c.
Webs : 1 Row @ 4" o.c.
Use equal spacing between rows and stagger nails in each row to avoid splitting.

130 mph wind, 24.16 ft mean hgt, ASCE 7-10, CLOSED bldg, not located within 11.00 ft from roof edge, RISK CAT II, EXP B, wind TC DL=5.0 psf, wind BC DL=2 0 psf GCpi(+/-)=0.18

Trusses to be spaced at 60.0" OC maximum.

Deflection meets L/240 live and L/180 total load. Creep increase factor for dead load is 1.50.

MWFRS loads based on trusses located at least 24.16 ft. from roof edge.

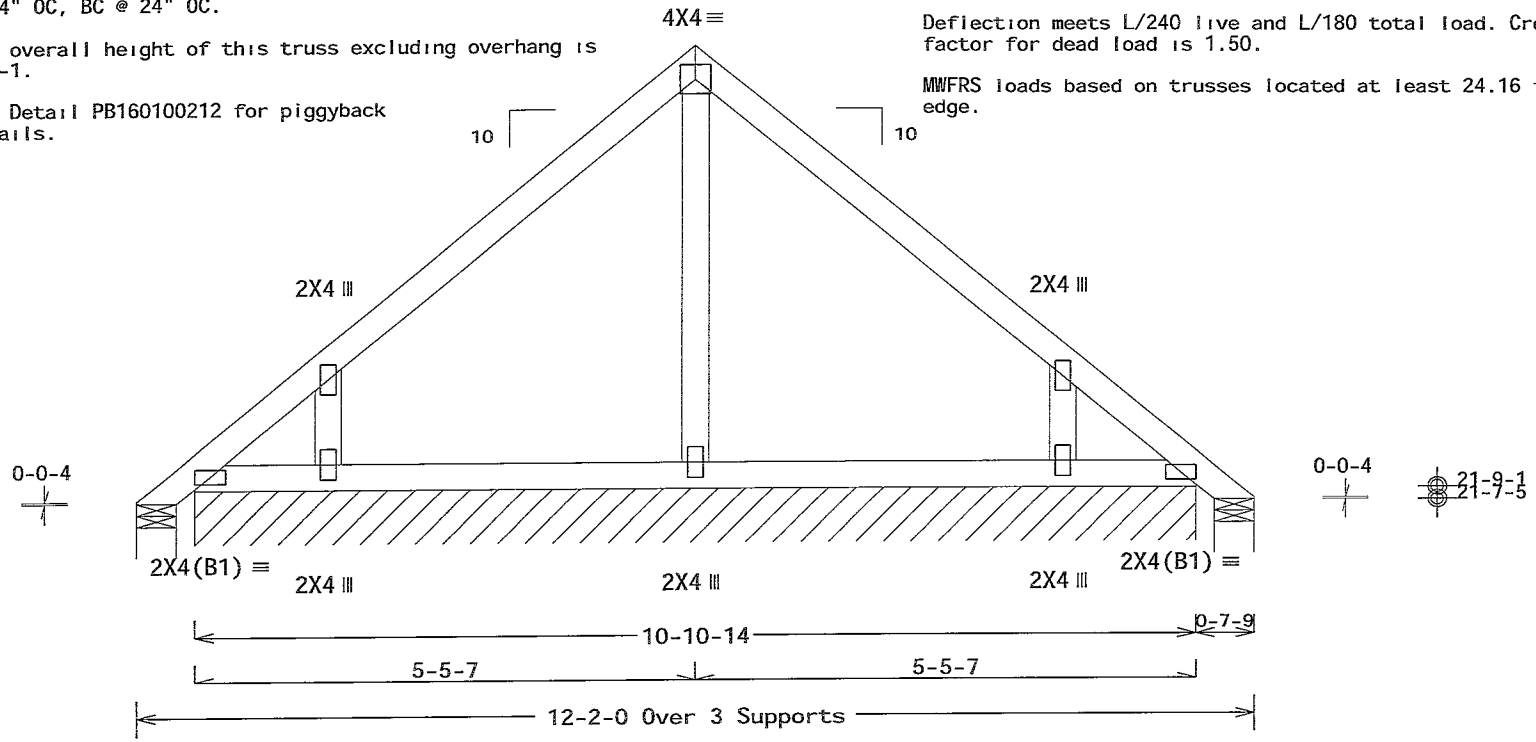

R=76 Rw=196 U=165 W=5.167" (5 167" min.)
RL=268/-268
R=159 PLF U=9 PLF W=10-10-14

R=76 U=9 W=5.168" (5.168" min.)

Design Crit: FBC2010Res/TPI-2007(STD)
FT/RT=20%(0%)/10(0)

PLT TYP. Wave

18 53 03 D225 14 QTY:1 FL/-/5/-/-/R/- Scale =.5"/Ft.

ALPINE
ITW Building Components Group Inc.
Orlando FL, 32837
FL COA #0 278

WARNING READ AND FOLLOW ALL NOTES ON THIS SHEET!
IMPORTANT FURNISH THIS DESIGN TO ALL CONTRACTORS INCLUDING INSTALLERS

Trusses require extreme care in fabricating handling shipping installing and bracing Refer to and follow the latest edition of BCSI (Building Component Safety Information by TPI and WTCA) for safety practices prior to performing these functions Installers shall provide temporary bracing per BCSI Unless noted otherwise top chord shall have properly attached structural sheathing and bottom chord shall have a properly attached rigid ceiling Locations shown for permanent lateral restraint of webs shall have bracing installed per BCSI sections B3 B7 or B10 as applicable

ITW Building Components Group Inc (ITWBCG) shall not be responsible for any deviation from this design, any failure to build the truss in conformance with ANSI/TPI 1 or for handling shipping installation & bracing of trusses Apply plates to each face of truss and position as shown above and on the joints Details unless noted otherwise Refer to drawings 160A-Z for standard plate positions A seal on this drawing or cover page listing this drawing indicates acceptance of professional engineering responsibility solely for the design shown The suitability and use of this design for any structure is the responsibility of the Building Designer per ANSI/TPI 1 Sec 2 For more information see This job general notes page ITW-BCG www itwbcg com, TPI www tpinst org WTCA www sbcindustry com ICC www iccsafe org

WILLIAM H. KRICK LICENSE No. 70861 STATE OF FLORIDA PROFESSIONAL ENGINEER
08/28/2013

TC LL	20.0 PSF	REF	R215-- 62508
TC DL	10.0 PSF	DATE	08/28/13
BC DL	10.0 PSF	DRW	HCUSR215 13240039
BC LL	0.0 PSF	HC-ENG	KD/AP
TOT.LD.	40.0 PSF	SEQN-	381187
DUR.FAC.	1.25	FROM	CDM
SPACING	60.0"	JREF-	1UZ6215_Z01

(8320-/SMITH RES.--LAKE CITY /S&S CONSTRUCTION -- LAKE CITY, FL - A4)

Top chord 2x4 SP 2400f-2.0E
Bot chord 2x4 SP 2400f-2.0E
Webs 2x4 SP 2400f-2.0E

(**) 1 plate(s) require special positioning. Refer to scaled plate plot details for special positioning requirements.

Wind loads and reactions based on MWFRS with additional C&C member design.

Deflection meets L/240 live and L/180 total load. Creep increase factor for dead load is 1.50.

See Detail PB160100212 for piggyback details.

Special loads
------(Lumber Dur.Fac.=1.25 / Plate Dur.Fac.=1.25)
TC- From 60 plf at -0.63 to 60 plf at 5.45
TC- From 60 plf at 5.45 to 60 plf at 16.99
BC- From 4 plf at -0.63 to 4 plf at 16.99

130 mph wind, 25.21 ft mean hgt, ASCE 7-10, CLOSED bldg, Located anywhere in roof, RISK CAT II, EXP B, wind TC DL=5.0 psf, wind BC DL=2.0 psf GCpi(+/-)=0.18

The overall height of this truss excluding overhang is 7-2-1.

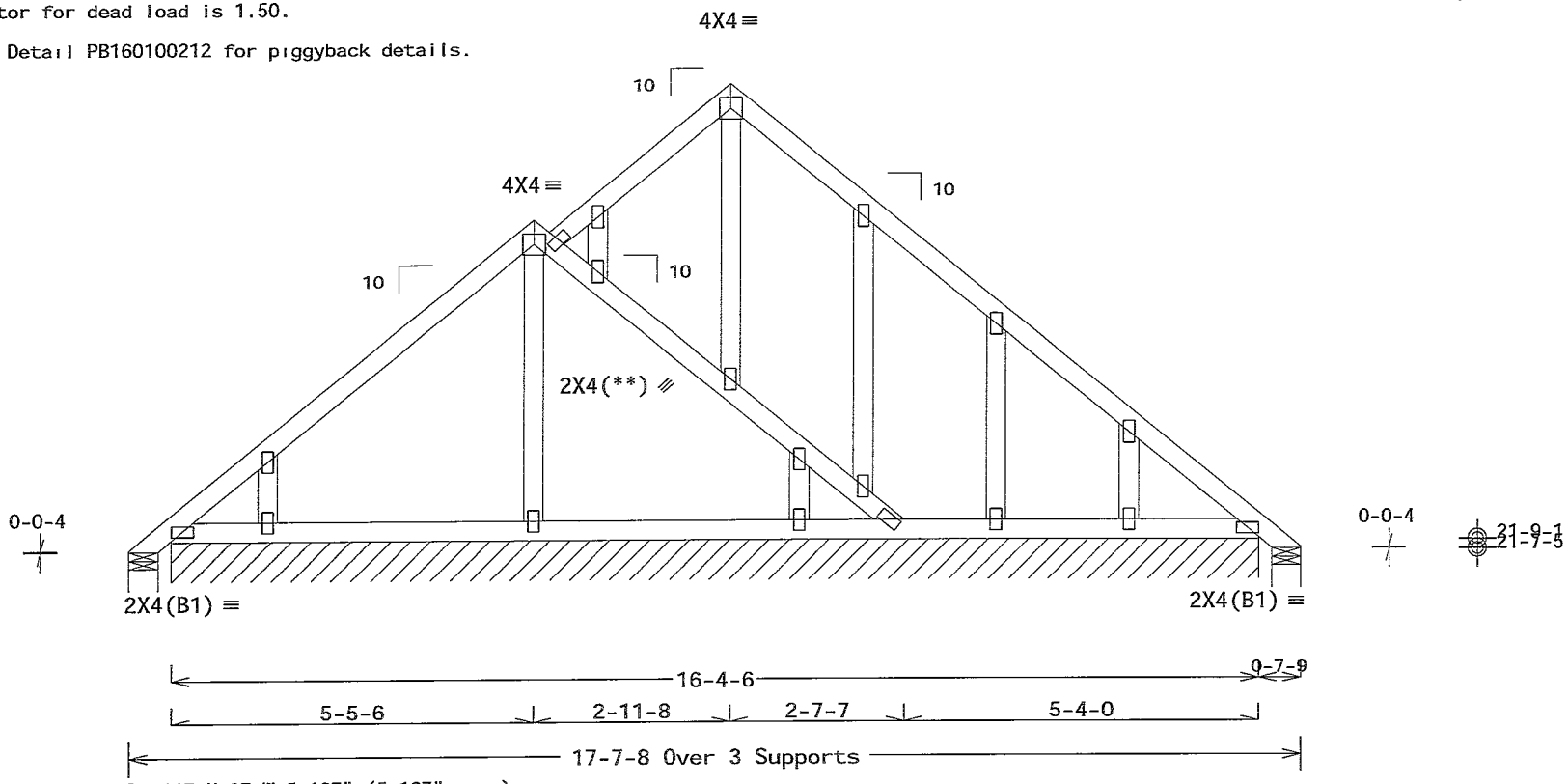

R=35 Rw=117 U=97 W=5.167" (5.167" min.)
RL=154/-156 R=64 PLF U=19 PLF W=16-4-6

R=16 Rw=23 U=4 W=5.167" (5.167" min.)

Note: All Plates Are 2X4 Except As Shown.

Design Crit: FBC2010Res/TPI-2007(STD)
FT/RT=20%(0%)/10(0)

PLT TYP. Wave

12/03/02 10:23:14 QTY:1 FL/-/5/-/-/R/- Scale =.375"/Ft.

ALPINE
ITW Building Components Group Inc.
Orlando FL, 32837
FL COA #0 278

WARNING READ AND FOLLOW ALL NOTES ON THIS SHEET!
IMPORTANT FURNISH THIS DESIGN TO ALL CONTRACTORS INCLUDING INSTALLERS

Trusses require extreme care in fabricating handling shipping installing and bracing Refer to and follow the latest edition of BCSI (Building Component Safety Information by TPI and WTCA) for safety practices prior to performing these functions Installers shall provide temporary bracing per BCSI Unless noted otherwise top chord shall have properly attached structural sheathing and bottom chord shall have a properly attached rigid ceiling Locations shown for permanent lateral restraint of webs shall have bracing installed per BCSI sections B3 B7 or B10 as applicable

ITW Building Components Group Inc (ITWBCG) shall not be responsible for any deviation from this design any failure to build the truss in conformance with ANSI/TPI 1 or for handling shipping installation & bracing of trusses Apply plates to each face of truss and position as shown above and on the attached Data is unless noted otherwise Refer to drawings 160A-Z for standard plate positions A seal on this drawing or cover page listing this drawing indicates acceptance of professional engineering responsibility solely for the design shown The suitability and use of this design for any structure is the responsibility of the Building Designer per ANSI/TPI 1 Sec 2 For more information see: This job general notes page ITW-BCG www itwbcg com TPI www tpinst org WTCA www sbcindustry com ICC www iccsafe org

WILLIAM H. KRICK LICENSE No. 70861 STATE OF FLORIDA PROFESSIONAL ENGINEER
08/28/2013

TC LL	20.0 PSF	REF	R215-- 62509
TC DL	10.0 PSF	DATE	08/28/13
BC DL	10.0 PSF	DRW	HCUSR215 13240036
BC LL	0.0 PSF	HC-ENG	KD/AP
TOT.LD.	40.0 PSF	SEQN-	381126
DUR.FAC.	1.25	FROM	CDM
SPACING	24.0"	JREF-	1UZ6215_Z01

(8320-/SMITH RES.--LAKE CITY /S&S CONSTRUCTION -- LAKE CITY, FL - A5)

Top chord 2x4 SP 2400f-2.0E
Bot chord 2x4 SP 2400f-2.0E
Webs 2x4 SP 2400f-2 0E

In lieu of rigid ceiling use purlins to brace BC @ 24" OC.

Truss passed check for 20 psf additional bottom chord live load in areas with 42"-high x 24"-wide clearance.

The overall height of this truss excluding overhang is 7-6-6.

See Detail PB160100212 for piggyback details.

130 mph wind, 25.39 ft mean hgt, ASCE 7-10, CLOSED bldg, not located within 9.00 ft from roof edge, RISK CAT II, EXP B, wind TC DL=5.0 psf, wind BC DL=2.0 psf. GCpi(+/-)=0.18

Wind loads and reactions based on MWFRS with additional C&C member design

Deflection meets L/240 live and L/180 total load. Creep increase factor for dead load is 1 50.

MWFRS loads based on trusses located at least 12.69 ft. from roof edge.

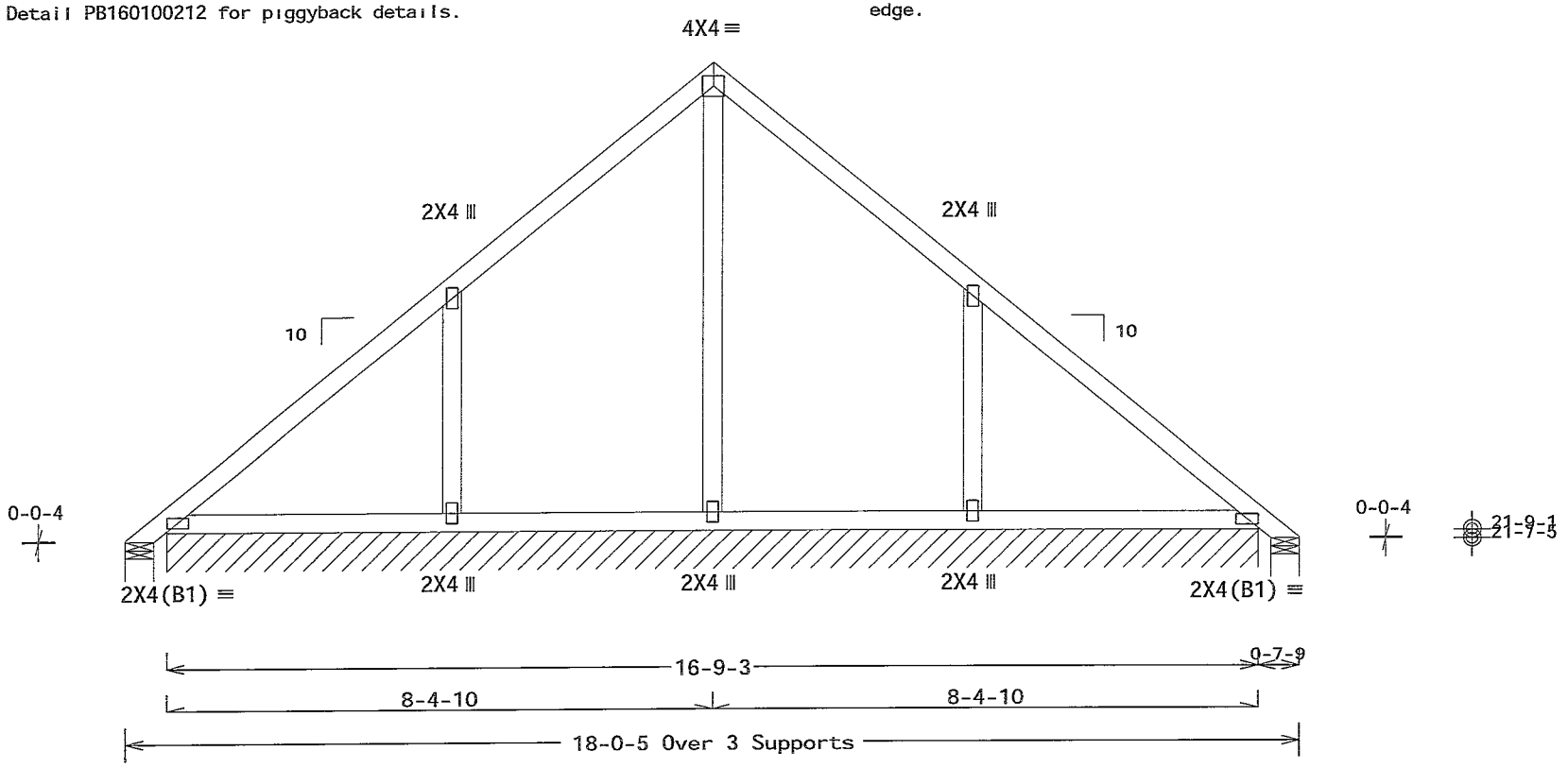

R=3 Rw=145 U=179 W=5.167" (5.167" min)
RL=162/-162 R=92 PLF U=14 PLF W=16-9-3

R=3 Rw=47 U=74 W=5.167" (5.167" min.)

Design Crit: FBC2010Res/TPI-2007(STD)
FT/RT=20%(0%)/10(0)

PLT TYP. Wave

03-08-13 14 QTY:8 FL/-/5/-/-/R/- Scale =.375"/Ft.

ALPINE
ITW Building Components Group Inc.
Orlando FL, 32837
FL COA #0 278

WARNING READ AND FOLLOW ALL NOTES ON THIS SHEET!
IMPORTANT FURNISH THIS DESIGN TO ALL CONTRACTORS INCLUDING INSTALLERS

Trusses require extreme care in fabricating handling shipping installing and bracing Refer to and follow the latest edition of BCSI (Building Component Safety Informat on by TPI and WTCA) for safety practices prior to performing these functions Installers shall prov de temporary bracing per BCSI. Unless noted otherwise top chord shall have properly attached structural sheathing and bottom chord shall have a properly attached rigid ceiling Locations shown for permanent lateral restraint of webs shall have bracing installed per BCSI sections B3 B7 or B10 as applicable

ITW Building Components Group Inc (ITWBCG) shall not be responsible for any deviation from this design, any failure to build the truss in conformance with ANSI/TPI 1 or for handling shipping installation & bracing of trusses Apply plates to each face of truss and position as shown above and on the joint Details unless noted otherwise Refer to drawings 160A-Z for standard plate positions A seal on this drawing or cover page listing this drawing indicates acceptance of professional engineering responsibility solely for the design shown The suitability and use of this design for any structure is the responsibility of the Building Designer per ANSI/TPI 1 Sec 2 For more information see This design general notes page ITW-BCG www itwbcg com TPI www tpinst org WTCA www sbcindustry com ICC www iccsafe org

WILLIAM H. KRICK LICENSE No. 70861 STATE OF FLORIDA PROFESSIONAL ENGINEER
08/28/2013

TC LL	20.0 PSF	REF	R215-- 62510
TC DL	10.0 PSF	DATE	08/28/13
BC DL	10.0 PSF	DRW	HCUSR215 13240016
BC LL	0.0 PSF	HC-ENG	KD/AP
TOT.LD.	40.0 PSF	SEQN-	381282
DUR.FAC.	1.25	FROM	CDM
SPACING	24.0"	JREF-	1UZ6215_Z01

(8320-/SMITH RES.--LAKE CITY /S&S CONSTRUCTION -- LAKE CITY, FL - A6)

Top chord 2x4 SP 2400f-2.0E
Bot chord 2x4 SP 2400f-2.0E
Webs 2x4 SP 2400f-2.0E

130 mph wind, 25.39 ft mean hgt, ASCE 7-10, CLOSED bldg, not located within 9.00 ft from roof edge, RISK CAT II, EXP B, wind TC DL=5.0 psf, wind BC DL=2.0 psf. GCpi(+/-)=0.18

Wind loads and reactions based on MWFRS with additional C&C member design.

Truss passed check for 20 psf additional bottom chord live load in areas with 42"-high x 24"-wide clearance

The overall height of this truss excluding overhang is 7-6-6.

See Detail PB160100212 for piggyback details.

2 COMPLETE TRUSSES REQUIRED

Nail Schedule.0.131"x3", min nails
Top Chord· 1 Row @12.00" o.c.
Bot Chord· 1 Row @12.00" o.c.
Webs . 1 Row @ 4" o c
Use equal spacing between rows and stagger nails in each row to avoid splitting.

In lieu of rigid ceiling use purlins to brace BC @ 24" OC.

Deflection meets L/240 live and L/180 total load. Creep increase factor for dead load is 1 50.

MWFRS loads based on trusses located at least 12 69 ft. from roof edge.

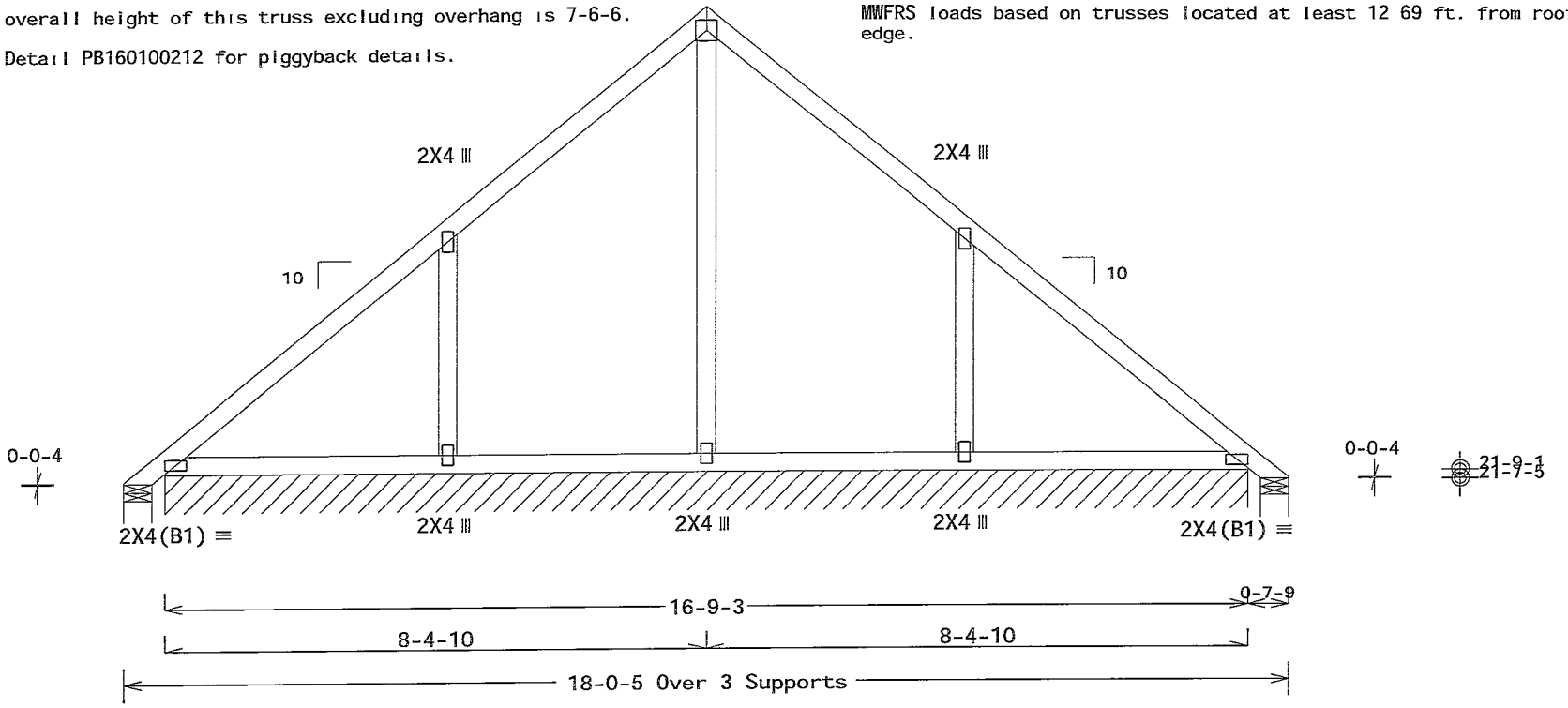

R=3 Rw=145 U=179 W=5 167" (5.167" min.)
RL=16-9-1 PLF U=14 PLF W=16-9-3

R=3 Rw=47 U=74 W=5.167" (5 167" min.)

Design Crit· FBC2010Res/TPI-2007(STD)
FT/RT=20%(0%)/10(0)

PLT TYP. Wave

13-03-02 14 QTY:6 FL/-/5/-/-/R/- Scale =.375"/Ft.

ALPINE
ITW Building Components Group Inc.
Orlando FL, 32837
FL COA #0 278

WARNING READ AND FOLLOW ALL NOTES ON THIS SHEET!
IMPORTANT FURNISH THIS DESIGN TO ALL CONTRACTORS INCLUDING INSTALLERS

Trusses require extreme care in fabricating handling shipping installing and bracing Refer to and follow the latest edition of BCSI (Building Component Safety Information by TPI and WTCA) for safety practices prior to performing these functions Installers shall provide temporary bracing per BCSI. Unless noted otherwise top chord shall have properly attached structural sheath ng and bottom chord shall have a properly attached rigid ceiling Locations shown for permanent lateral restraint of webs shall have bracing installed per BCSI sections B3 B7 or B10 as applicable

ITW Building Components Group Inc (ITWBCG) shall not be responsible for any deviation from this design, any failure to build the truss in conformance with ANSI/TPI 1 or for handling shipping installation and bracing of trusses Apply plates to each face of truss and position as shown above and on the applicable Details unless noted otherwise Refer to drawings 160A-Z for standard plate positions A seal on this drawing or cover page listing this drawing indicates acceptance of professional engineering responsibility solely for the design shown The suitability and use of this design for any structure is the responsibility of the Building Designer per ANSI/TPI 1 Sec 2 For more information see This job's general notes page ITW-BCG www itwbcg com TPI www tpinst org WTCA www sbcindustry com; ICC www iccsafe org

WILLIAM H. KRICK LICENSE No. 70861 STATE OF FLORIDA PROFESSIONAL ENGINEER
08/28/2013

TC LL	20.0 PSF	REF	R215-- 62511
TC DL	10.0 PSF	DATE	08/28/13
BC DL	10.0 PSF	DRW	HCUSR215 13240017
BC LL	0.0 PSF	HC-ENG	KD/AP
TOT.LD.	40.0 PSF	SEQN-	381300
DUR.FAC.	1.25	FROM	CDM
SPACING	24.0"	JREF-	1UZ6215_Z01

(8320-/SMITH RES.--LAKE CITY /S&S CONSTRUCTION -- LAKE CITY, FL - A7)

Top chord 2x4 SP 2400f-2.0E
Bot chord 2x4 SP 2400f-2.0E
Webs 2x4 SP 2400f-2.0E

130 mph wind, 24.17 ft mean hgt, ASCE 7-10, CLOSED bldg, Located anywhere in roof, RISK CAT II, EXP B, wind TC DL=5.0 psf, wind BC DL=2.0 psf. GCpi(+/-)=0.18

Wind loads and reactions based on MWFRS with additional C&C member design.

The overall height of this truss excluding overhang is 5-1-1.

See Detail PB160100212 for piggyback details.

Special loads
------(Lumber Dur.Fac.=1.25 / Plate Dur.Fac.=1.25)
TC- From 60 plf at -0.63 to 60 plf at 5.45
TC- From 60 plf at 5.45 to 60 plf at 11.53
BC- From 4 plf at -0.63 to 4 plf at 11 53

In lieu of rigid ceiling use purlins to brace BC @ 24" OC.

Deflection meets L/240 live and L/180 total load. Creep increase factor for dead load is 1 50.

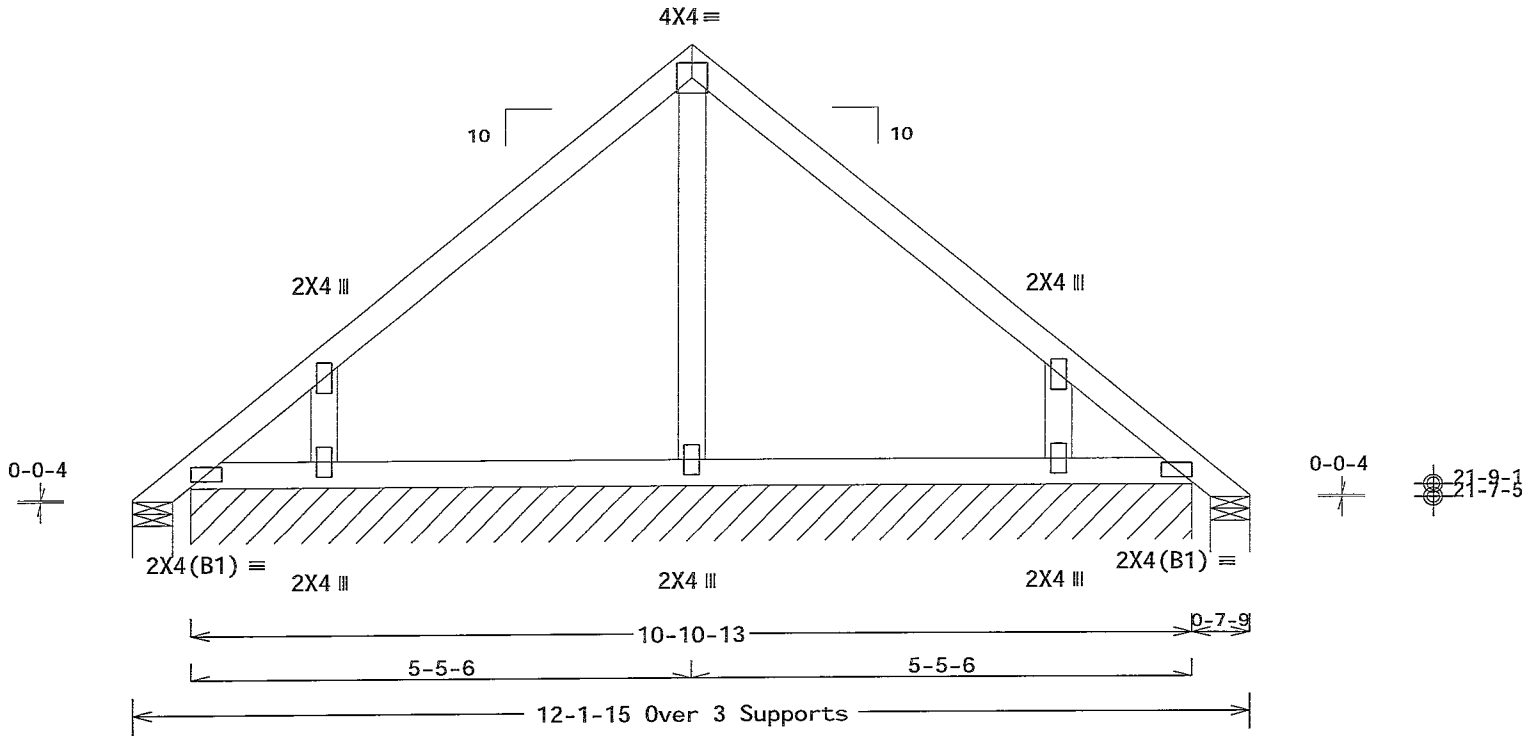

R=30 Rw=78 U=66 W=5.167" (5.167" min.)
RL=10R=640PLF U=16 PLF W=10-10-13

R=30 U=10 W=5.167" (5 167" min.)

Design Crit: FBC2010Res/TPI-2007(STD)
FT/RT=20%(0%)/10(0)

PLT TYP. Wave

1263 0 0 0 2 0 5 14 0 0 Y:8

FL/-/5/-/-/R/-

Scale =.5"/Ft.

TC LL	20.0 PSF	REF	R215-- 62512
TC DL	10.0 PSF	DATE	08/28/13
BC DL	10.0 PSF	DRW	HCUSR215 13240018
BC LL	0.0 PSF	HC-ENG	KD/AP
TOT.LD.	40.0 PSF	SEQN-	381010
DUR.FAC.	1.25	FROM	CDM
SPACING	24.0"	JREF-	1UZ6215_Z01

ALPINE
ITW Building Components Group Inc.
Orlando FL, 32837
FL COA #0 278

WARNING READ AND FOLLOW ALL NOTES ON THIS SHEET!
IMPORTANT FURNISH THIS DESIGN TO ALL CONTRACTORS INCLUDING INSTALLERS

Trusses require extreme care in fabricating handling shipping installing and bracing Refer to and follow the latest edition of BCSI (Building Component Safety Information by TPI and WTCA) for safety practices prior to performing these functions Installers shall provide temporary bracing per BCSI. Unless noted otherwise top chord shall have properly attached structural sheathing and bottom chord shall have a properly attached rigid ceiling Locations shown for permanent lateral restraint of webs shall have bracing installed per BCSI sections B3 B7 or B10 as applicable

ITW Building Components Group Inc (ITWBCG) shall not be responsible for any deviation from this design, any failure to build the truss in conformance with ANSI/TPI 1 or for handling shipping installation bracing of trusses Apply plates to each face of truss and position as shown above and on the individual Details unless noted otherwise Refer to drawings 160A-Z for standard plate positions A seal on this drawing or cover page listing this drawing indicates acceptance of professional engineering responsibility solely for the design shown The suitability and use of this design for any structure is the responsibility of the Building Designer per ANSI/TPI 1 Sec 2 For more information see This job general notes page ITW-BCG www itwbcg com TPI www tpinst org WTCA www sbcindustry com ICC www iccsafe org

WILLIAM H. KRICK
LICENSE
No. 70861
STATE OF FLORIDA
PROFESSIONAL ENGINEER
08/28/2013

(8320-/SMITH RES.--LAKE CITY /S&S CONSTRUCTION -- LAKE CITY, FL - A8)

Top chord 2x4 SP 2400f-2.0E
Bot chord 2x4 SP 2400f-2.0E
Webs 2x4 SP 2400f-2.0E

130 mph wind, 20.12 ft mean hgt, ASCE 7-10, CLOSED bldg, Located anywhere in roof, RISK CAT II, EXP B, wind TC DL=5.0 psf, wind BC DL=2.0 psf. GCpi(+/-)=0.18

Wind loads and reactions based on MWFRS with additional C&C member design.

The overall height of this truss excluding overhang is 2-0-0.

See Detail PB160100212 for piggyback details.

Special loads
------(Lumber Dur.Fac.=1.25 / Plate Dur.Fac.=1.25)

TC- From	60 plf at	-0.63 to	60 plf at	1.74
TC- From	60 plf at	1.74 to	60 plf at	4.11
BC- From	4 plf at	-0.63 to	4 plf at	4.11

In lieu of rigid ceiling use purlins to brace BC @ 24" OC.

Deflection meets L/240 live and L/180 total load. Creep increase factor for dead load is 1.50.

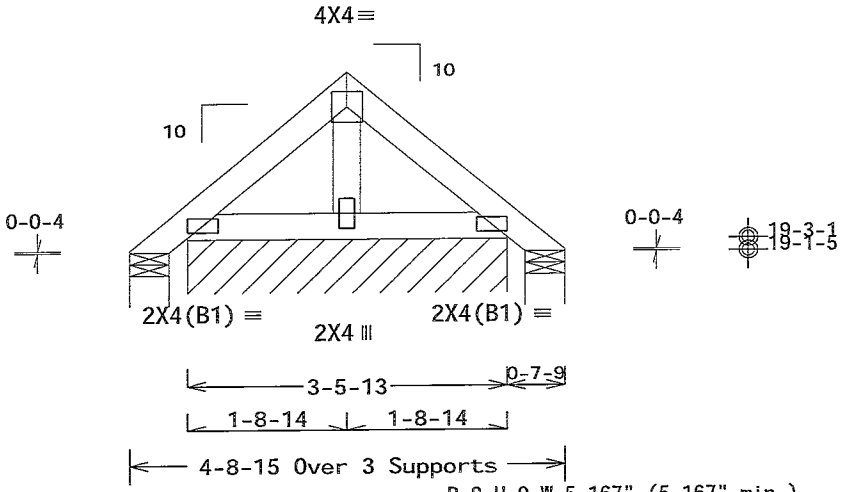

R=8 Rw=30 U=27 W=5.167" (5.167" min.) R=8 U=0 W=5 167" (5.167" min.)
RL=39/-39 R=75 PLF U=16 PLF W=3-5-13

Design Crit: FBC2010Res/TPI-2007(STD)
FT/RT=20%(0%)/10(0)

PLT TYP. Wave

12/03/13 02:25:14 QTY:1 FL/-/5/-/-/R/- Scale =.5"/Ft.

ALPINE
ITW Building Components Group Inc.
Orlando FL, 32837
FL COA #0 278

WARNING READ AND FOLLOW ALL NOTES ON THIS SHEET!
IMPORTANT FURNISH THIS DESIGN TO ALL CONTRACTORS INCLUDING INSTALLERS

Trusses require extreme care in fabricating handling shipping installing and bracing Refer to and follow the latest edition of BCSI (Building Component Safety Informat on by TPI and WTCA) for safety practices prior to performing these functions Installers shall prov de temporary bracing per BCSI. Unless noted otherwise top chord shall have properly attached structural sheathing and bottom chord shall have a properly attached rigid ceiling Locations shown for permanent lateral restraint of webs shall have bracing installed per BCSI sections B3 B7 or B10 as applicable

ITW Building Components Group Inc (ITWBCG) shall not be responsible for any deviation from this design, any failure to build the truss in conformance with ANSI/TPI 1 or for handling shipping installation and bracing of trusses Apply plates to each face of truss and position as shown above and on the joint Details unless noted otherwise Refer to drawings 160A-Z for standard plate positions A seal on this drawing or cover page listing this drawing indicates acceptance of professional engineering responsibility solely for the design shown The suitability and use of this design for any structure is the responsibility of the Building Designer per ANSI/TPI 1 Sec 2 For more information see This design general notes page ITW-BCG www itwbcg com TPI www tpinst org WTCA www sbcindustry com, ICC www iccsafe org

WILLIAM H. KRIOK LICENSE No. 70861 STATE OF FLORIDA PROFESSIONAL ENGINEER
08/28/2013

TC LL	20.0 PSF	REF	R215-- 62513
TC DL	10.0 PSF	DATE	08/28/13
BC DL	10.0 PSF	DRW	HCUSR215 13240019
BC LL	0.0 PSF	HC-ENG	KD/AP
TOT.LD.	40.0 PSF	SEQN-	380808
DUR.FAC.	1.25	FROM	CDM
SPACING	24.0"	JREF-	1UZ6215_Z01

(8320-/SMITH RES.--LAKE CITY /S&S CONSTRUCTION -- LAKE CITY, FL - A9)

Top chord 2x4 SP 2400f-2.0E
Bot chord 2x4 SP 2400f-2.0E
Webs 2x4 SP 2400f-2.0E

Special loads
------(Lumber Dur Fac.=1.25 / Plate Dur.Fac.=1.25)
TC- From 60 plf at -0.63 to 60 plf at 1 24
TC- From 60 plf at 1.24 to 60 plf at 3.11
BC- From 4 plf at -0.63 to 4 plf at 3 11

Wind loads and reactions based on MWFRS with additional C&C member design.

Deflection meets L/240 live and L/180 total load. Creep increase factor for dead load is 1.50.

See Detail PB160100212 for piggyback details.

3 COMPLETE TRUSSES REQUIRED

Nail Schedule 0.131"x3", min. nails
Top Chord 1 Row @12.00" o.c.
Bot Chord. 1 Row @12.00" o.c.
Webs . 1 Row @ 4" o.c
Repeat nailing as each layer is applied. Use equal spacing between rows and stagger nails in each row to avoid splitting.

130 mph wind, 19.91 ft mean hgt, ASCE 7-10, CLOSED bldg, Located anywhere in roof, RISK CAT II, EXP B, wind TC DL=5.0 psf, wind BC DL=2 0 psf. GCpi(+/-)=0.18

The overall height of this truss excluding overhang is 1-7-0.

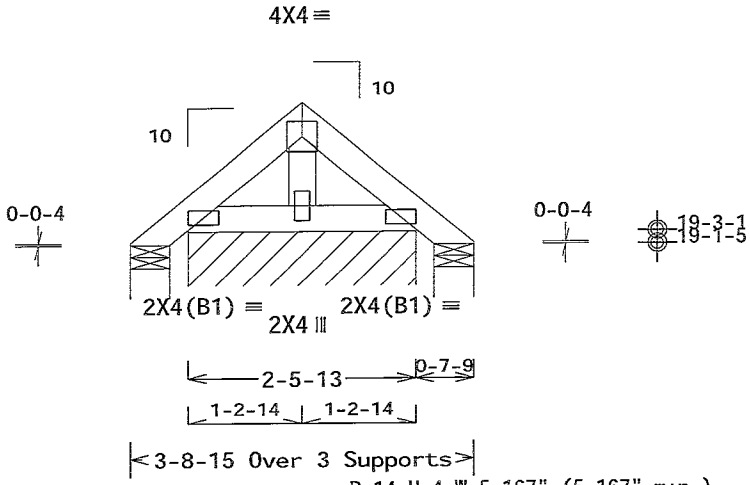

R=14 U=4 W=5.167" (5.167" min.)
R=14 Rw=29 U=17 W=5.167" (5.167" min.)
RL=30/-30 R=75 PLF U=12 PLF W=2-5-13

Design Crit: FBC2010Res/TPI-2007(STD)
FT/RT=20%(0%)/10(0)

PLT TYP. Wave

12/03/13 JOB:62514A QTY:1 FL/-/5/-/-/R/- Scale =.5"/Ft.

ALPINE
ITW Building Components Group Inc.
Orlando FL, 32837
FL COA #0 278

WARNING READ AND FOLLOW ALL NOTES ON THIS SHEET!
IMPORTANT FURNISH THIS DESIGN TO ALL CONTRACTORS INCLUDING INSTALLERS

Trusses require extreme care in fabricating handling shipping installing and bracing Refer to and follow the latest edition of BCSI (Building Component Safety Information by TPI and WTCA) for safety practices prior to performing these functions Installers shall provide temporary bracing per BCSI. Unless noted otherwise top chord shall have properly attached structural sheathing and bottom chords shall have a properly attached rigid ceiling Locations shown for permanent lateral restraint of webs shall have bracing installed per BCSI sections B3 B7 or B10 as applicable

ITW Building Components Group Inc (ITWBCG) shall not be responsible for any deviation from this design, any failure to build the truss in conformance with ANSI/TPI 1 or for handling shipping installation and bracing of trusses Apply plates to each face of truss and position as shown above and on the joint Details unless noted otherwise Refer to drawings 160A-Z for standard plate positions A seal on this drawing or cover page listing this drawing indicates acceptance of professional engineering responsibility solely for the design shown The suitability and use of this design for any structure is the responsibility of the Building Designer per ANSI/TPI 1 Sec 2 For more information see: This job's general notes page ITW-BCG www itwbcg com, TPI www tpinst org WTCA www sbcindustry com, ICC www iccsafe org

WILLIAM H. KRICK LICENSE No. 70861 STATE OF FLORIDA PROFESSIONAL ENGINEER 08/28/2013

TC LL	20.0 PSF	REF	R215-- 62514
TC DL	10.0 PSF	DATE	08/28/13
BC DL	10.0 PSF	DRW	HCUSR215 13240020
BC LL	0.0 PSF	HC-ENG	KD/AP
TOT.LD.	40.0 PSF	SEQN-	380825
DUR.FAC.	1.25	FROM	CDM
SPACING	24.0"	JREF-	1UZ6215_Z01

(8320-/SMITH RES.--LAKE CITY /S&S CONSTRUCTION -- LAKE CITY, FL - A10)

Top chord 2x4 SP 2400f-2.0E
Bot chord 2x4 SP 2400f-2.0E
Webs 2x4 SP 2400f-2 0E

130 mph wind, 19.91 ft mean hgt, ASCE 7-10, CLOSED bldg, Located anywhere in roof, RISK CAT II, EXP B, wind TC DL=5.0 psf, wind BC DL=2.0 psf. GCpi(+/-)=0.18

Wind loads and reactions based on MWFRS with additional C&C member design.

The overall height of this truss excluding overhang is 1-7-0.

See Detail PB160100212 for piggyback details.

Special loads
------(Lumber Dur.Fac.=1.25 / Plate Dur.Fac.=1.25)

TC- From	60 plf at	-0.63 to	60 plf at	1.24
TC- From	60 plf at	1.24 to	60 plf at	3.11
BC- From	4 plf at	-0.63 to	4 plf at	3.11

In lieu of rigid ceiling use purlins to brace BC @ 24" OC.

Deflection meets L/240 live and L/180 total load. Creep increase factor for dead load is 1.50.

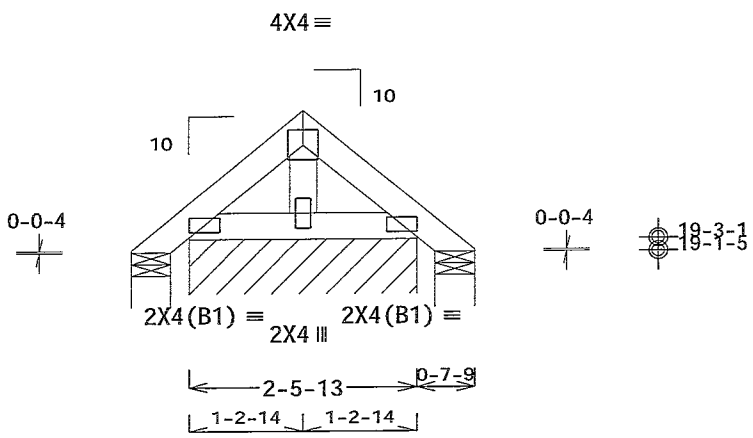

Design Crit: FBC2010Res/TPI-2007(STD)
FT/RT=20%(0%)/10(0)

PLT TYP. Wave

QTY:6 FL/-/5/-/-/R/- Scale =.5"/Ft.

ALPINE
ITW Building Components Group Inc.
Orlando FL, 32837
FL COA #0 278

WARNING READ AND FOLLOW ALL NOTES ON THIS SHEET!
IMPORTANT FURNISH THIS DESIGN TO ALL CONTRACTORS INCLUDING INSTALLERS

Trusses require extreme care in fabricating handling shipping installing and bracing Refer to and follow the latest edition of BCSI (Building Component Safety Informat on by TPI and WTCA) for safety practices prior to performing these functions Installers shall prov de temporary bracing per BCSI. Unless noted otherwise top chord shall have properly attached structural sheathing and bottom chord shall have a properly attached rigid ceiling Locations shown for permanent lateral restraint of webs shall have bracing installed per BCSI sections B3 B7 or B10 as applicable

ITW Building Components Group Inc (ITWBCG) shall not be responsible for any deviation from this design, any failure to build the truss in conformance with ANSI/TPI 1 or for handling shipping installation & bracing of trusses Apply plates to each face of truss and position as shown above and on the individual Details unless noted otherwise Refer to drawings 160A-Z for standard plate positions A seal on this drawing or cover page listing this drawing indicates acceptance of professional engineering responsibility solely for the design shown The suitability and use of this design for any structure is the responsibility of the Building Designer per ANSI/TPI 1 Sec 2 For more information see This design's general notes page ITW-BCG www itwbcg com TPI www tpinst org WTCA www sbcindustry com ICC www iccsafe org

WILLIAM H. KRICK LICENSE No. 70861 STATE OF FLORIDA PROFESSIONAL ENGINEER
08/28/2013

TC LL	20.0 PSF	REF	R215-- 62515
TC DL	10.0 PSF	DATE	08/28/13
BC DL	10.0 PSF	DRW	HCUSR215 13240021
BC LL	0.0 PSF	HC-ENG	KD/AP
TOT.LD.	40.0 PSF	SEQN-	380820
DUR.FAC.	1.25	FROM	CDM
SPACING	24.0"	JREF-	1UZ6215_Z01

(8320-/SMITH RES.--LAKE CITY /S&S CONSTRUCTION -- LAKE CITY, FL - A11)

Top chord 2x4 SP 2400f-2.0E
Bot chord 2x4 SP 2400f-2.0E
Webs 2x4 SP 2400f-2.0E

130 mph wind, 19.91 ft mean hgt, ASCE 7-10, CLOSED bldg, Located anywhere in roof, RISK CAT II, EXP B, wind TC DL=5 0 psf, wind BC DL=2.0 psf. GCpi(+/-)=0.18

Wind loads and reactions based on MWFRS with additional C&C member design.

Deflection meets L/240 live and L/180 total load. Creep increase factor for dead load is 1.50.

See Detail PB160100212 for piggyback details.

Special loads
------(Lumber Dur.Fac.=1.25 / Plate Dur.Fac.=1.25)

TC- From	60 plf at	-0.63 to	60 plf at	1.24
TC- From	60 plf at	1.24 to	60 plf at	3.12
BC- From	4 plf at	-0.63 to	4 plf at	3.12

Gable end supports 8" max rake overhang.

See DWGS A14030ENC100212 & GBLLETIN0212 for more requirements.

In lieu of rigid ceiling use purlins to brace BC @ 24" OC.

The overall height of this truss excluding overhang is 1-7-0.

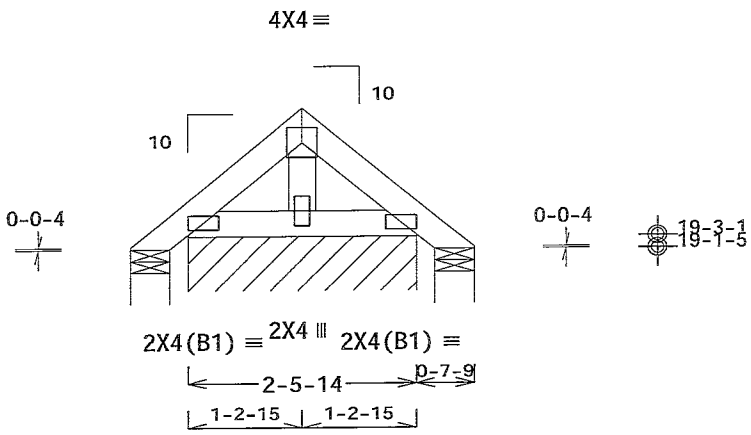

R=14 U=5 W=5.167" (5.167" min.)
R=14 Rw=23 U=18 W=5.167" (5.167" min.)
RL=30/-30
R=75 PLF U=13 PLF W=2-5-14
Design Crit: FBC2010Res/TPI-2007(STD)
FT/RT=20%(0%)/10(0)

PLT TYP. Wave

13-03-08 02:25:24 Ver:1 FL/-/5/-/-/R/- Scale =.5"/Ft.

ALPINE
ITW Building Components Group Inc.
Orlando FL, 32837
FL COA #0 278

WARNING READ AND FOLLOW ALL NOTES ON THIS SHEET!
IMPORTANT FURNISH THIS DESIGN TO ALL CONTRACTORS INCLUDING INSTALLERS

Trusses require extreme care in fabricating handling shipping installing and bracing Refer to and follow the latest edition of BCSI (Building Component Safety Information by TPI and WTCA) for safety practices prior to performing these functions Installers shall provide temporary bracing per BCSI Unless noted otherwise top chord shall have properly attached structural sheathing and bottom chord shall have a properly attached rigid ceiling Locations shown for permanent lateral restraint of webs shall have bracing installed per BCSI sections B3 B7 or B10 as applicable

ITW Building Components Group Inc (ITWBCG) shall not be responsible for any deviation from this design any failure to build the truss in conformance with ANSI/TPI 1 or for handling shipping installing bracing of trusses Apply plates to each face of truss and position as shown above and on the Single Ply Details unless noted otherwise Refer to drawings 160A-Z for standard plate positions A seal on this drawing or cover page listing this drawing indicates acceptance of professional engineering responsibility solely for the design shown The suitability and use of this design for any structure is the responsibility of the Building Designer per ANSI/TPI 1 Sec 2 For more information see This job's general notes page ITW-BCG www itwbcg com TPI www tpinst org WTCA www sbcindustry com, ICC www iccsafe org

WILLIAM H. KRICK
LICENSED
No. 70861
STATE OF FLORIDA
PROFESSIONAL ENGINEER
08/28/2013

TC LL	20.0 PSF	REF	R215-- 62516
TC DL	10.0 PSF	DATE	08/28/13
BC DL	10.0 PSF	DRW	HCUSR215 13240022
BC LL	0.0 PSF	HC-ENG	KD/AP
TOT.LD.	40.0 PSF	SEQN-	380818
DUR.FAC.	1.25	FROM	CDM
SPACING	24.0"	JREF-	1UZ6215_Z01

(8320-/SMITH RES.--LAKE CITY /S&S CONSTRUCTION -- LAKE CITY, FL - B1)

Top chord 2x4 SP 2400f-2.0E
Bot chord 2x4 SP 2400f-2.0E
Webs 2x4 SP 2400f-2.0E

See DWGS A14015ENC100212 & GBLLETIN0212 for more requirements.

(a) Continuous lateral bracing equally spaced on member.

In lieu of structural panels use purlins to brace all flat TC @ 24" OC.

Deflection meets L/240 live and L/180 total load. Creep increase factor for dead load is 1.50.

+ MEMBER TO BE LATERALLY BRACED FOR HORIZONTAL WIND LOADS. BRACING SYSTEM TO BE DESIGNED AND FURNISHED BY OTHERS.

(**) 2 plate(s) require special positioning. Refer to scaled plate plot details for special positioning requirements.

130 mph wind, 15.00 ft mean hgt ASCE 7-10, CLOSED bldg, Located anywhere in roof, RISK CAT II, EXP B, wind TC DL=5.0 psf, wind BC DL=5.0 psf. GCpi(+/-)=0.18

Wind loads and reactions based on MWFRS with additional C&C member design.

Bottom chord checked for 10.00 psf non-concurrent live load.

The overall height of this truss excluding overhang is 8-10-1.

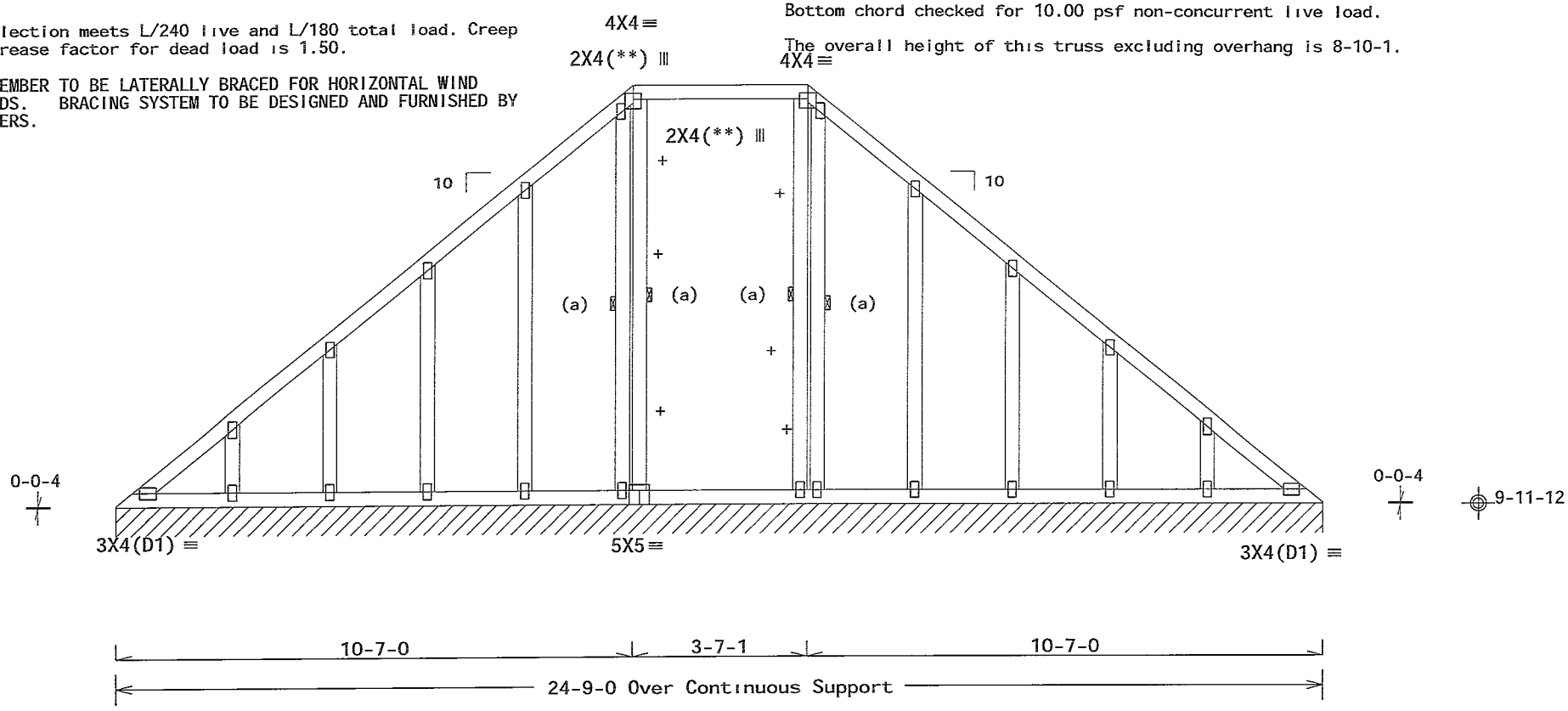

R=80 PLF U=1 PLF W=24-9-0
RL=7/-7 PLF

Note: All Plates Are 2X4 Except As Shown.

Design Crit: FBC2010Res/TPI-2007(STD)
FT/RT=20%(0%)/10(0)

PLT TYP. Wave

T03-0002614 COPY:1 FL/-/5/-/-/R/- Scale =.3125"/Ft.

ALPINE
ITW Building Components Group Inc.
Orlando FL, 32837
FL COA #0 278

WARNING READ AND FOLLOW ALL NOTES ON THIS SHEET!
IMPORTANT FURNISH THIS DESIGN TO ALL CONTRACTORS INCLUDING INSTALLERS

Trusses require extreme care in fabricating handling shipping installing and bracing Refer to and follow the latest edition of BCSI (Building Component Safety Informat on by TPI and WTCA) for safety practices prior to performing these functions Installers shall provide temporary bracing per BCSI. Unless noted otherwise top chord shall have properly attached structural sheathing and bottom chord shall have a properly attached rigid ceiling Locations shown for permanent lateral restraint of webs shall have bracing installed per BCSI sections B3 B7 or B10 as applicable

ITW Building Components Group Inc (ITWBCG) shall not be responsible for any deviation from this design, any failure to build the truss in conformance with ANSI/TPI 1 or for handling shipping installation bracing of trusses Apply plates to each face of truss and position as shown above and on the shipping Details unless noted otherwise Refer to drawings 160A-Z for standard plate positions A seal on drawing or cover page listing this drawing indicates acceptance of professional engineering responsibility solely for the design shown The suitability and use of this design for any structure is the responsibility of the Building Designer per ANSI/TPI 1 Sec 2 For more information see This job general notes page ITW-BCG www itwbcg com TPI www tpinst org WTCA www sbcindustry com ICC www iccsafe org

WILLIAM H. KRICK LICENSED No. 70861 STATE OF FLORIDA PROFESSIONAL ENGINEER
08/28/2013

TC LL	20.0 PSF	REF	R215-- 62517
TC DL	10.0 PSF	DATE	08/28/13
BC DL	10.0 PSF	DRW	HCUSR215 13240023
BC LL	0.0 PSF	HC-ENG	KD/AP
TOT.LD.	40.0 PSF	SEQN-	380816
DUR.FAC.	1.25	FROM	CDM
SPACING	24.0"	JREF-	1UZ6215_Z01

(8320-/SMITH RES.--LAKE CITY /S&S CONSTRUCTION -- LAKE CITY, FL - B2)

Top chord 2x4 SP 2400f-2.0E
Bot chord 2x4 SP 2400f-2.0E
Webs 2x4 SP 2400f-2.0E

In lieu of structural panels use purlins to brace all flat TC @ 24" OC.

Bottom chord checked for 10.00 psf non-concurrent live load.

The overall height of this truss excluding overhang is 9-1-9

130 mph wind, 15.00 ft mean hgt, ASCE 7-10, CLOSED bldg, Located anywhere in roof, RISK CAT II, EXP B, wind TC DL=5.0 psf, wind BC DL=5 0 psf. GCpi(+/-)=0.18

Wind loads and reactions based on MWFRS with additional C&C member design

Deflection meets L/240 live and L/180 total load. Creep increase factor for dead load is 1.50

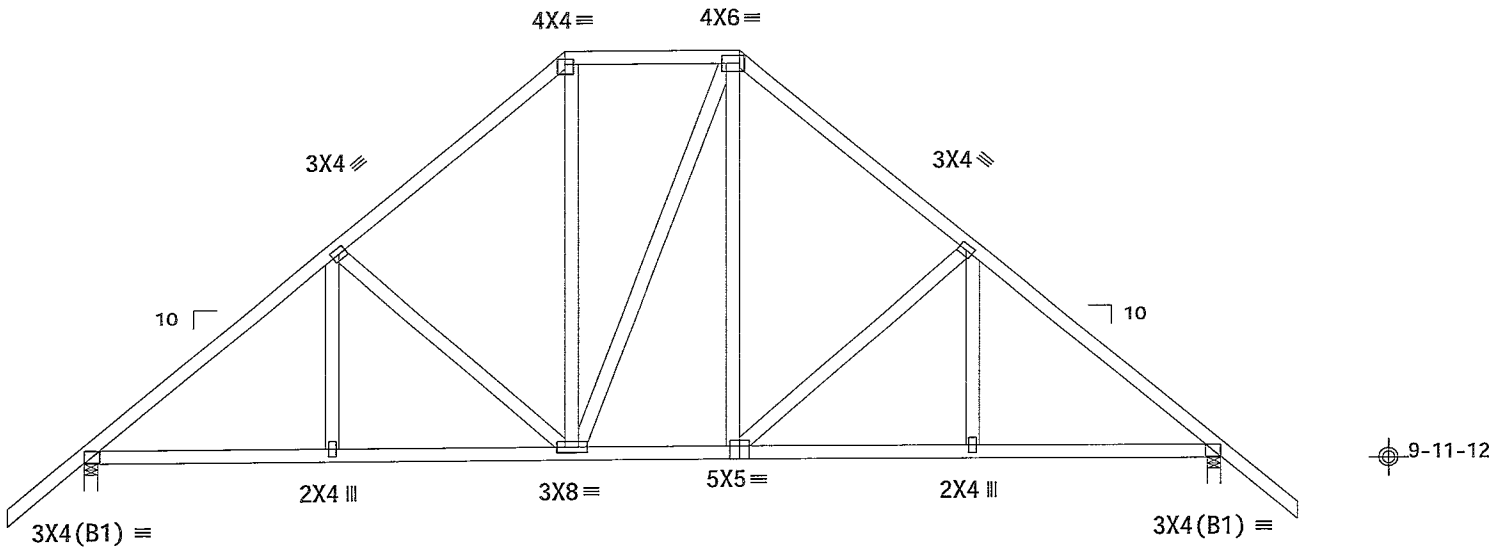

Design Crit: FBC2010Res/TPI-2007(STD)
FT/RT=20%(0%)/10(0)

PLT TYP. Wave

1263.03C02KS14 00%Y:6 FL/-/5/-/-/R/- Scale =.25"/Ft.

ALPINE
ITW Building Components Group Inc.
Orlando FL, 32837
FL COA #0 278

WARNING READ AND FOLLOW ALL NOTES ON THIS SHEET!
IMPORTANT FURNISH THIS DESIGN TO ALL CONTRACTORS INCLUDING INSTALLERS

Trusses require extreme care in fabricating handling shipping installing and bracing Refer to and follow the latest edition of BCSI (Building Component Safety Information by TPI and WTCA) for safety practices prior to performing these functions Installers shall provide temporary bracing per BCSI. Unless noted otherwise top chord shall have properly attached structural sheathing and bottom chord shall have a properly attached rigid ceiling Locations shown for permanent lateral restraint of webs shall have bracing installed per BCSI sections B3 B7 or B10 as applicable

ITW Building Components Group Inc (ITWBCG) shall not be responsible for any deviation from this design any failure to bu ld the truss in conformance with ANSI/TPI 1 or for handling shipping installation bracing of trusses Apply plates to each face of truss and position as shown above and on the applicable Details unless noted otherwise Refer to drawings 160A-Z for standard plate positions A seal on this drawing or cover page listing this drawing indicates acceptance of professional engineering responsibility solely for the design shown The suitability and use of this design for any structure is the responsibility of the Building Designer per ANSI/TPI 1 Sec 2 For more information see This job's general notes page ITW-BCG www itwbcg com TPI www tpinst org WTCA www sbcindustry com ICC www iccsafe org

WILLIAM H. KRICK LICENSED No. 70861 STATE OF FLORIDA PROFESSIONAL ENGINEER
08/28/2013

TC LL	20.0 PSF	REF	R215-- 62518
TC DL	10.0 PSF	DATE	08/28/13
BC DL	10.0 PSF	DRW	HCUSR215 13240002
BC LL	0.0 PSF	HC-ENG	KD/AP
TOT.LD.	40.0 PSF	SEQN-	380823
DUR.FAC.	1.25	FROM	CDM
SPACING	24.0"	JREF-	1UZ6215_Z01

(8320-/SMITH RES.--LAKE CITY /S&S CONSTRUCTION -- LAKE CITY, FL - B3G)

Top chord 2x4 SP 2400f-2 0E
Bot chord 2x8 SP 2400f-2 0E
Webs 2x4 SP 2400f-2.0E
Lt Wedge 2x6 SP 2400f-2 0E Rt Wedge 2x6 SP 2400f-2 0E

Special loads
------(Lumber Dur Fac =1 25 / Plate Dur Fac.=1.25)
TC- From 60 plf at 0 00 to 60 plf at 10 48
TC- From 60 plf at 10 48 to 60 plf at 14 27
TC- From 60 plf at 14 27 to 60 plf at 24 75
BC- From 10 plf at 0 00 to 10 plf at 24 75
BC- 1871.46 lb Conc Load at 2 06, 4 06, 6.06, 8 06
10.06,12.06,14.06,16 06,18 06,20 06,22.06,24 06

130 mph wind, 15.00 ft mean hgt, ASCE 7-10, CLOSED bldg, Located anywhere in roof, RISK CAT II, EXP B, wind TC DL=5 0 psf, wind BC DL=5.0 psf GCpi(+/-)=0 18

In lieu of structural panels use purlins to brace all flat TC @ 24" OC.

The overall height of this truss excluding overhang is 9-1-9

3 COMPLETE TRUSSES REQUIRED

Nail Schedule 0 131"x3", min nails
Top Chord 1 Row @12 00" o c
Bot Chord 2 Rows @ 3 50" o c (Each Row)
Webs 1 Row @ 4" o.c
Repeat nailing as each layer is applied Use equal spacing between rows and stagger nails in each row to avoid splitting 4" o c spacing of nails perpendicular and parallel to grain required in area over bearings greater than 4"

Brg blocks 0 131"x3", min nails

brg	x-loc	#blocks	length/blk	#nails/blk	wall plate
2	24 458'	1	12"	4	Rigid Surface

Brg block to be same size and species as chord
Refer to drawing CNNAILSP0109 for more information.

Wind loads and reactions based on MWFRS

Deflection meets L/360 live and L/240 total load Creep increase factor for dead load is 1.50.

WARNING! THIS TRUSS IS NOT SYMMETRIC, BUT ITS EXTERIOR GEOMETRY MAKES ERECTION ERROR MORE PROBABLE. IT IS IMPERATIVE THAT THIS TRUSS BE INSTALLED PROPERLY TRUSS MANUFACTURER IS TO MARK THIS TRUSS FOR PROPER ERECTION

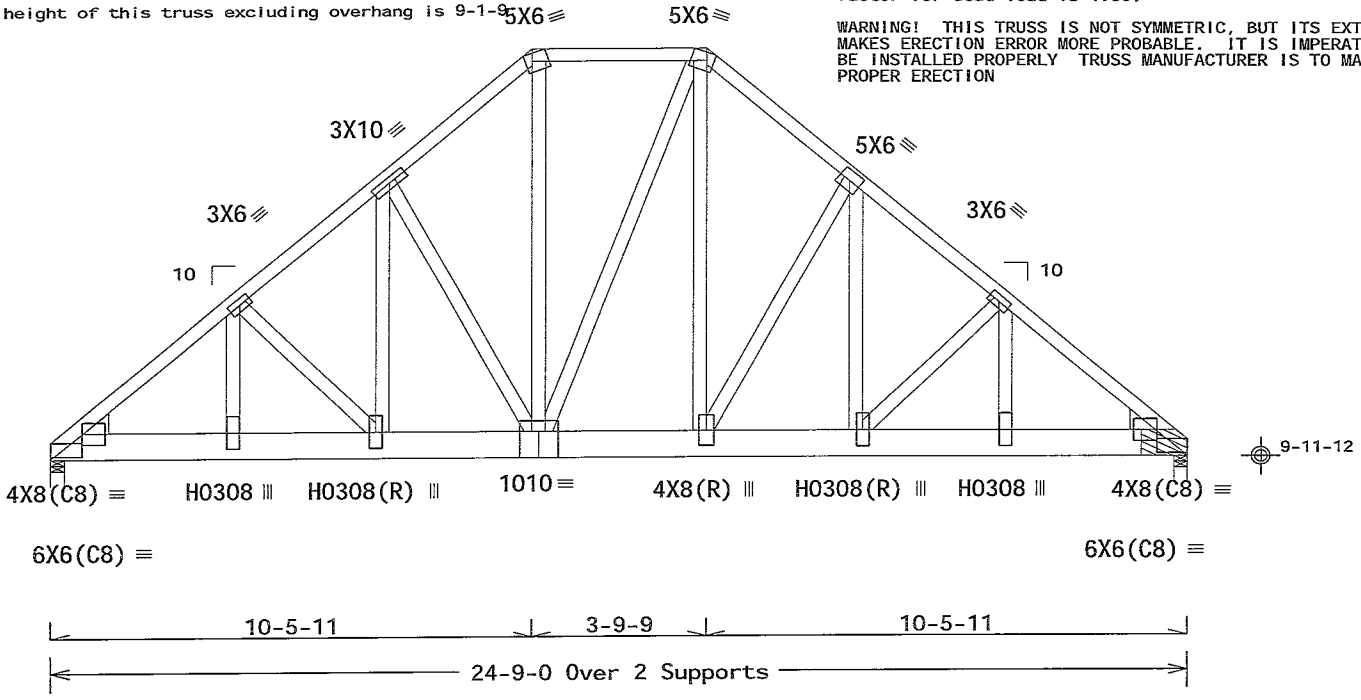

Design Crit: FBC2010Res/TPI-2007(STD)
FT/RT=20%(0%)/10(0)

PLT TYP. 20 Gauge HS,Wave

12 03 03 0223 141 QTY:1 FL/-/5/-/-/R/- Scale =.25"/Ft.

ALPINE
ITW Building Components Group Inc.
Orlando FL, 32837
FL COA #0 278

WARNING READ AND FOLLOW ALL NOTES ON THIS SHEET!
IMPORTANT FURNISH THIS DESIGN TO ALL CONTRACTORS INCLUDING INSTALLERS

Trusses require extreme care in fabricating handling shipping installing and bracing Refer to and follow the latest edition of BCSI (Building Component Safety Informat on by TPI and WTCA) for safety practices prior to performing these functions Installers shall provide temporary bracing per BCSI Unless noted otherwise top chord shall have properly attached structural sheathing and bottom chord shall have a properly attached rigid ceiling Locations shown for permanent lateral restraint of webs shall have bracing installed per BCSI sections B3 B7 or B10 as applicable

ITW Building Components Group Inc (ITWBCG) shall not be responsible for any deviation from this design, any failure to build the truss in conformance with ANSI/TPI 1 or for handling shipping installation & bracing of trusses Apply plates to each face of truss and position as shown above and on Connector Plate Details unless noted otherwise Refer to drawings 160A-Z for standard plate positions A seal on this drawing or cover page listing this drawing indicates acceptance of professional engineering responsibility solely for the design shown The suitability and use of this design for any structure is the responsibility of the Building Designer per ANSI/TPI 1 Sec 2 For more information see the general notes page ITW-BCG www itwbcg com TPI www tpinst org WTCA www sbcindustry com ICC www iccsafe org

WILLIAM H. KRICK LICENSE No. 70861 STATE OF FLORIDA PROFESSIONAL ENGINEER
08/28/2013

TC LL	20.0 PSF	REF	R215-- 62519
TC DL	10.0 PSF	DATE	08/28/13
BC DL	10.0 PSF	DRW	HCUSR215 13240032
BC LL	0.0 PSF	HC-ENG	KD/AP
TOT.LD.	40.0 PSF	SEQN-	381360
DUR.FAC.	1.25	FROM	CDM
SPACING	24.0"	JREF-	1UZ6215_Z01

(8320-/SMITH RES.--LAKE CITY /S&S CONSTRUCTION -- LAKE CITY, FL - B4)

Top chord 2x4 SP 2400f-2.0E
Bot chord 2x4 SP 2400f-2.0E
Webs 2x4 SP 2400f-2 0E

Gable end supports 8" max rake overhang.

See DWGS A14030ENC100212 & GBLLETIN0212 for more requirements.

Bottom chord checked for 10.00 psf non-concurrent live load.

The overall height of this truss excluding overhang is 10-9-0.

+ MEMBER TO BE LATERALLY BRACED FOR HORIZONTAL WIND LOADS.
BRACING SYSTEM TO BE DESIGNED AND FURNISHED BY OTHERS.

130 mph wind, 15.50 ft mean hgt, ASCE 7-10, CLOSED bldg, Located anywhere in roof, RISK CAT II, EXP B, wind TC DL=5.0 psf, wind BC DL=5.0 psf. GCpi(+/-)=0.18

Wind loads and reactions based on MWFRS with additional C&C member design.

(a) Continuous lateral bracing equally spaced on member.

Deflection meets L/240 live and L/180 total load. Creep increase factor for dead load is 1.50.

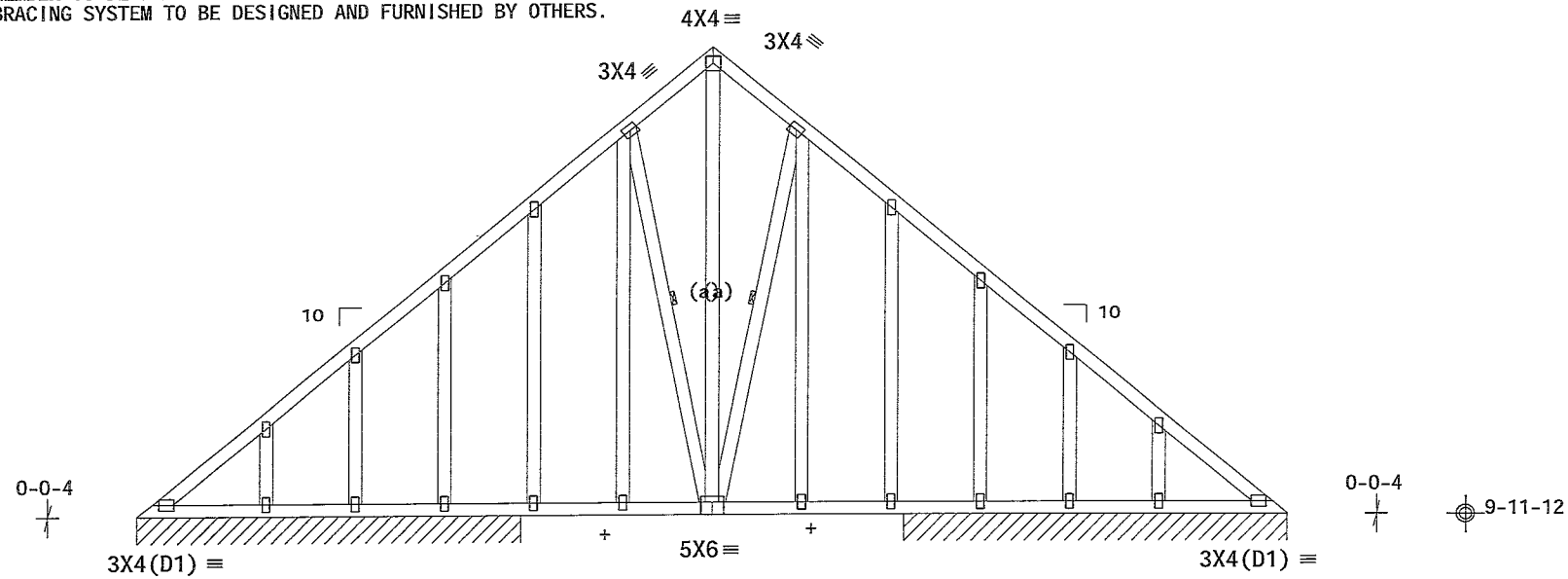

R=120 PLF U=2 PLF W=8-7-0
RL=25/-25 PLF

R=120 PLF U=2 PLF W=8-7-0

Note: All Plates Are 2X4 Except As Shown.

Design Crit: FBC2010Res/TPI-2007(STD)
FT/RT=20%(0%)/10(0)

PLT TYP. Wave

12-03-06 B225-14 QTY:1 FL/-/5/-/-/R/- Scale =.25"/Ft.

ALPINE
ITW Building Components Group Inc.
Orlando FL, 32837
FL COA #0 278

WARNING READ AND FOLLOW ALL NOTES ON THIS SHEET!
IMPORTANT FURNISH THIS DESIGN TO ALL CONTRACTORS INCLUDING INSTALLERS

Trusses require extreme care in fabricating handling shipping installing and bracing Refer to and follow the latest edition of BCSI (Building Component Safety Information by TPI and WTCA) for safety practices prior to performing these functions Installers shall provide temporary bracing per BCSI Unless noted otherwise top chord shall have properly attached structural sheathing and bottom chord shall have a properly attached rigid ceiling Locations shown for permanent lateral restraint of webs shall have bracing installed per BCSI sections B3 B7 or B10 as applicable

ITW Building Components Group Inc (ITWBCG) shall not be responsible for any deviation from this design any failure to build the truss in conformance with ANSI/TPI 1 or for handling shipping installation & bracing of trusses Apply plates to each face of truss and position as shown above and on the joint Details unless noted otherwise Refer to drawings 160A-Z for standard plate positions. A seal on this drawing or cover page listing this drawing indicates acceptance of professional engineering responsibility solely for the design shown The suitability and use of this design for any structure is the responsibility of the Building Designer per ANSI/TPI 1 Sec 2 For more information see. This job general notes page ITW-BCG www itwbcg com TPI www tpinst org WTCA www sbcindustry com ICC www iccsafe org

WILLIAM H. KRICK LICENSE No. 70861 STATE OF FLORIDA PROFESSIONAL ENGINEER
08/28/2013

TC LL	20.0 PSF	REF	R215-- 62520
TC DL	10.0 PSF	DATE	08/28/13
BC DL	10.0 PSF	DRW	HCUSR215 13240003
BC LL	0.0 PSF	HC-ENG	KD/AP
TOT.LD.	40.0 PSF	SEQN-	380803
DUR.FAC.	1.25	FROM	CDM
SPACING	24.0"	JREF-	1UZ6215_Z01

THIS DWG PREPARED FROM COMPUTER INPUT (LOADS & DIMENSIONS) SUBMITTED BY TRUSS MFR.

(8320-/SMITH RES.--LAKE CITY /S&S CONSTRUCTION -- LAKE CITY, FL - B5)

Top chord 2x4 SP 2400f-2.0E
Bot chord 2x4 SP 2400f-2.0E
Webs 2x4 SP 2400f-2.0E

In lieu of structural panels use purlins to brace all flat TC @ 24" OC.

Bottom chord checked for 10.00 psf non-concurrent live load.

The overall height of this truss excluding overhang is 9-1-9.

130 mph wind, 15.00 ft mean hgt, ASCE 7-10, CLOSED bldg, Located anywhere in roof, RISK CAT II, EXP B, wind TC DL=5.0 psf, wind BC DL=5.0 psf. GCpi(+/-)=0.18

Wind loads and reactions based on MWFRS with additional C&C member design

Deflection meets L/240 live and L/180 total load. Creep increase factor for dead load is 1.50

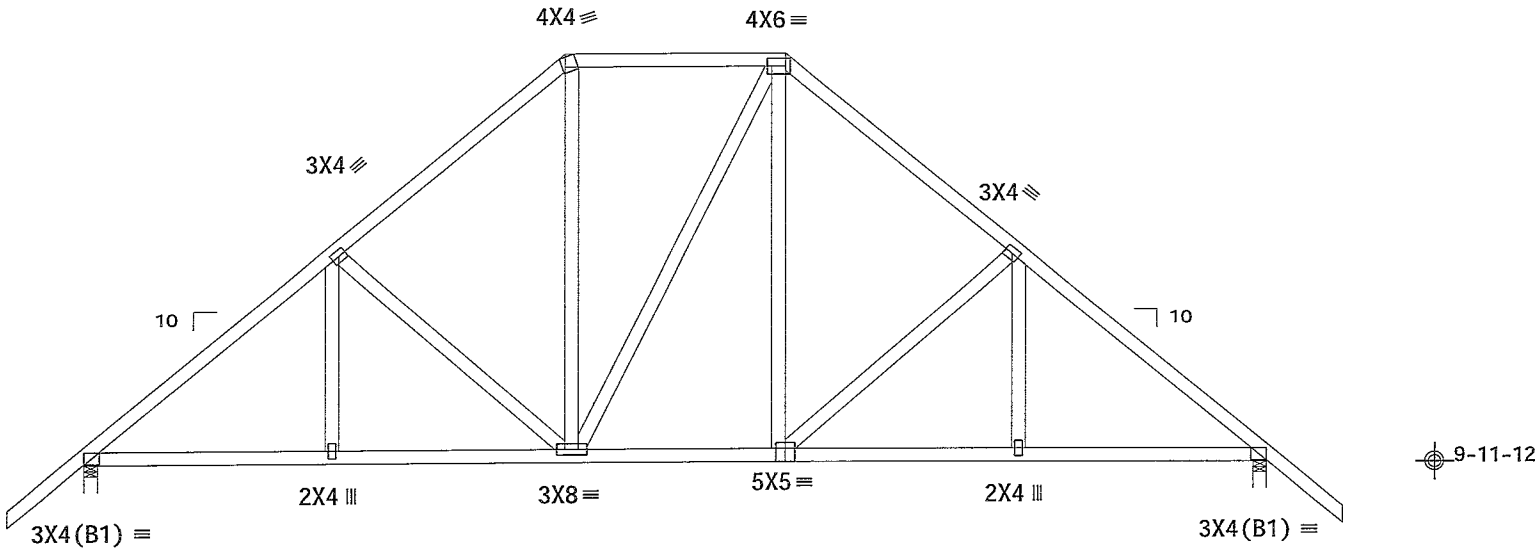

R=1139 U=28 W=3.5" (3 5" min.)
RL=230/-230

R=1139 U=28 W=3.5" (3.5" min)

Design Crit· FBC2010Res/TPI-2007(STD)
FT/RT=20%(0%)/10(0)

PLT TYP. Wave

12-03-06 E225-14 QTY:1 FL/-/5/-/-/R/- Scale =.25"/Ft.

ALPINE
ITW Building Components Group Inc.
Orlando FL, 32837
FL COA #0 278

WARNING READ AND FOLLOW ALL NOTES ON THIS SHEET!
IMPORTANT FURNISH THIS DESIGN TO ALL CONTRACTORS INCLUDING INSTALLERS

Trusses require extreme care in fabricating handling shipping installing and bracing Refer to and follow the latest edition of BCSI (Building Component Safety Information by TPI and WTCA) for safety practices prior to performing these functions Installers shall provide temporary bracing per BCSI. Unless noted otherwise top chord shall have properly attached structural sheathing and bottom chord shall have a properly attached rigid ceiling Locations shown for permanent lateral restraint of webs shall have bracing installed per BCSI sections B3 B7 or B10 as applicable

ITW Building Components Group Inc (ITWBCG) shall not be responsible for any deviation from this design, any failure to build the truss in conformance with ANSI/TPI 1 or for handling shipping installation & bracing of trusses Apply plates to each face of truss and position as shown above and on the joint Details unless noted otherwise Refer to drawings 160A-Z for standard plate positions A seal on this drawing or cover page listing this drawing indicates acceptance of professional engineering responsibility solely for the design shown The suitability and use of this design for any structure is the responsibility of the Building Designer per ANSI/TPI 1 Sec 2 For more information see This job general notes page ITW-BCG www itwbcg com, TPI www tpinst org WTCA www sbcindustry com, ICC www iccsafe org

WILLIAM H. KRICK LICENSE No. 70861 STATE OF FLORIDA PROFESSIONAL ENGINEER
08/28/2013

TC LL	20.0 PSF	REF	R215-- 62521
TC DL	10.0 PSF	DATE	08/28/13
BC DL	10.0 PSF	DRW	HCUSR215 13240004
BC LL	0.0 PSF	HC-ENG	KD/AP
TOT.LD.	40.0 PSF	SEQN-	380806
DUR.FAC.	1.25	FROM	CDM
SPACING	24.0"	JREF-	1UZ6215_Z01

(8320-/SMITH RES.--LAKE CITY /S&S CONSTRUCTION -- LAKE CITY, FL - B6G)

Top chord 2x4 SP 2400f-2.0E
Bot chord 2x8 SP 2400f-2.0E
Webs 2x4 SP 2400f-2 0E
Lt Wedge 2x6 SP 2400f-2.0E· Rt Wedge 2x6 SP 2400f-2.0E

Special loads
------(Lumber Dur.Fac.=1.25 / Plate Dur.Fac =1.25)
TC- From 60 plf at 0.00 to 60 plf at 12.88
TC- From 60 plf at 12.88 to 60 plf at 25.75
BC- From 10 plf at 0.00 to 10 plf at 25.75
BC- 1958.97 lb Conc. Load at 2.06, 4.06, 6.06, 8.06
10.06,12.06,14.06,16.06,18.06,20.06,22.06,24.06

130 mph wind, 15.74 ft mean hgt, ASCE 7-10, CLOSED bldg, Located anywhere in roof, RISK CAT II, EXP B, wind TC DL=5.0 psf, wind BC DL=5.0 psf. GCpi(+/-)=0.18

Wind loads and reactions based on MWFRS.

The overall height of this truss excluding overhang is 11-1-9.

3 COMPLETE TRUSSES REQUIRED

Nail Schedule:0 131"x3", min. nails
Top Chord 1 Row @12.00" o.c.
Bot Chord· 2 Rows @ 3.50" o.c. (Each Row)
Webs 1 Row @ 4" o.c.
Repeat nailing as each layer is applied. Use equal spacing between rows and stagger nails in each row to avoid splitting. 4" o.c. spacing of nails perpendicular and parallel to grain required in area over bearings greater than 4"

Brg blocks 0.131"x3", min. nails

brg	x-loc	#blocks	length/blk	#nails/blk	wall plate
2	25.458'	1	12"	4	Rigid Surface

Brg block to be same size and species as chord.
Refer to drawing CNNAILSP0109 for more information.

Deflection meets L/360 live and L/240 total load. Creep increase factor for dead load is 1.50.

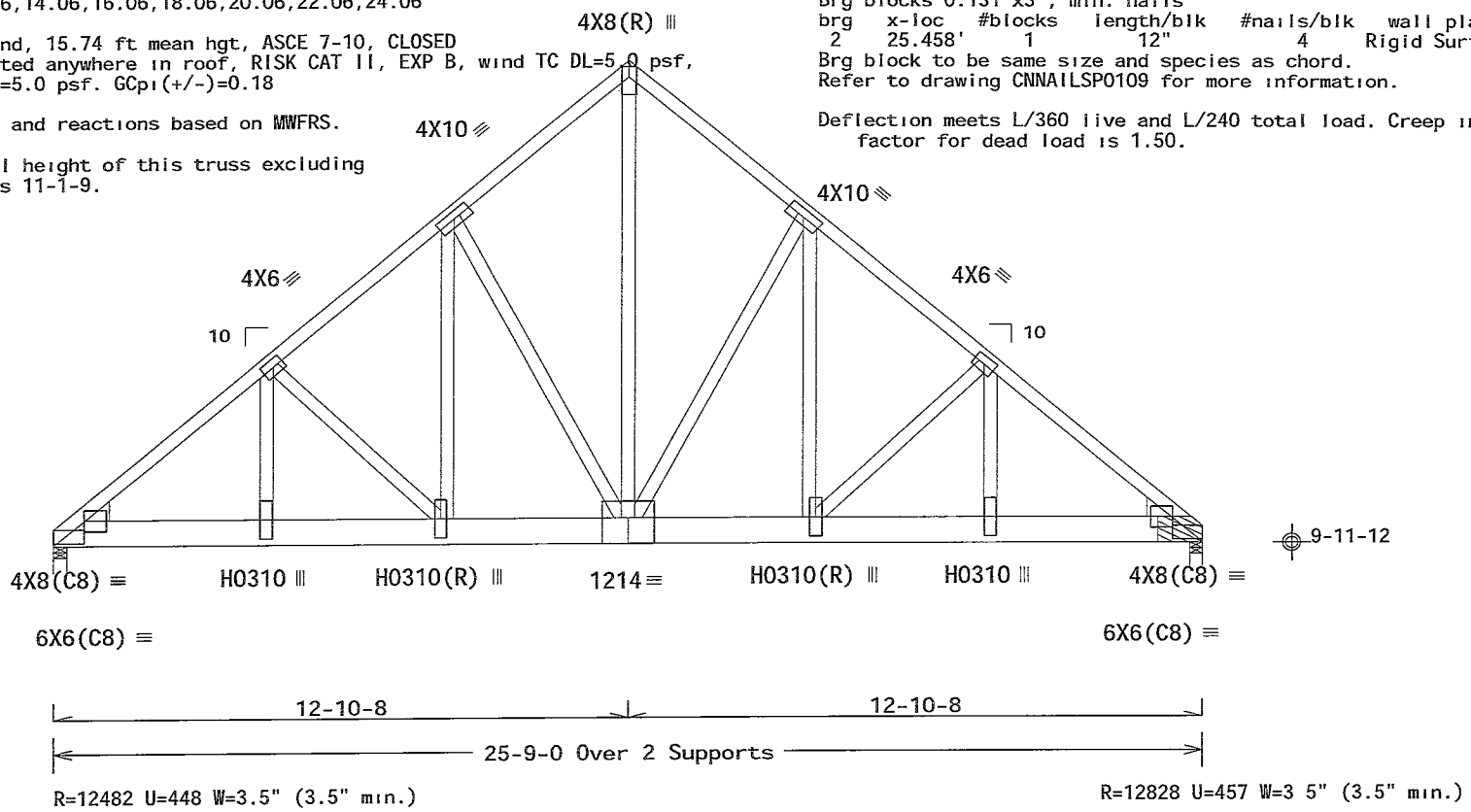

Design Crit. FBC2010Res/TPI-2007(STD)
PLT TYP. 20 Gauge HS,Wave FT/RT=20%(0%)/10(0) 18-53-08-0225-14 QTY:1 FL/-/5/-/-/R/- Scale =.25"/Ft.

ALPINE
ITW Building Components Group Inc.
Orlando FL, 32837
FL COA #0 278

WARNING READ AND FOLLOW ALL NOTES ON THIS SHEET!
IMPORTANT FURNISH THIS DESIGN TO ALL CONTRACTORS INCLUDING INSTALLERS

Trusses require extreme care in fabricating handling shipping installing and bracing Refer to and follow the latest edition of BCSI (Building Component Safety Information by TPI and WTCA) for safety practices prior to performing these functions Installers shall provide temporary bracing per BCSI Unless noted otherwise top chord shall have properly attached structural sheathing and bottom chord shall have a properly attached rigid ceiling Locations shown for permanent lateral restraint of webs shall have bracing installed per BCSI sections B3 B7 or B10 as applicable

ITW Building Components Group Inc (ITWBCG) shall not be responsible for any deviation from this design, any failure to build the truss in conformance with ANSI/TPI 1 or for handling shipping installation & bracing of trusses Apply plates to each face of truss and posit on as shown above and on the Joint Details unless noted otherwise Refer to drawings 160A-Z for standard plate positions A seal on this drawing or cover page listing this drawing indicates acceptance of professional engineering responsibility solely for the design shown The suitability and use of this design for any structure is the responsibility of the Building Designer per ANSI/TPI 1 Sec 2 For more information see This job general notes page ITW-BCG www itwbcg.com, TPI www tpinst org WTCA www sbcindustry com, ICC www iccsafe org

WILLIAM H. KRICK LICENSE No. 70861 STATE OF FLORIDA PROFESSIONAL ENGINEER
08/28/2013

TC LL	20.0 PSF	REF	R215-- 62522
TC DL	10.0 PSF	DATE	08/28/13
BC DL	10.0 PSF	DRW	HCUSR215 13240033
BC LL	0.0 PSF	HC-ENG	KD/AP
TOT.LD.	40.0 PSF	SEQN-	381362
DUR.FAC.	1.25	FROM	CDM
SPACING	24.0"	JREF-	1UZ6215_Z01

(8320-/SMITH RES.--LAKE CITY /S&S CONSTRUCTION -- LAKE CITY, FL - C1)

Top chord 2x4 SP 2400f-2.0E
Bot chord 2x4 SP 2400f-2.0E
Webs 2x4 SP 2400f-2.0E

See DWGS A14015ENC100212 & GBLLETIN0212 for more requirements.

Bottom chord checked for 10.00 psf non-concurrent live load.

The overall height of this truss excluding overhang is 6-5-15.

130 mph wind, 15.00 ft mean hgt, ASCE 7-10, CLOSED bldg, Located anywhere in roof, RISK CAT II, EXP B, wind TC DL=5.0 psf, wind BC DL=5.0 psf GCpi(+/-)=0.18

Wind loads and reactions based on MWFRS with additional C&C member design.

Deflection meets L/240 live and L/180 total load. Creep increase factor for dead load is 1.50.

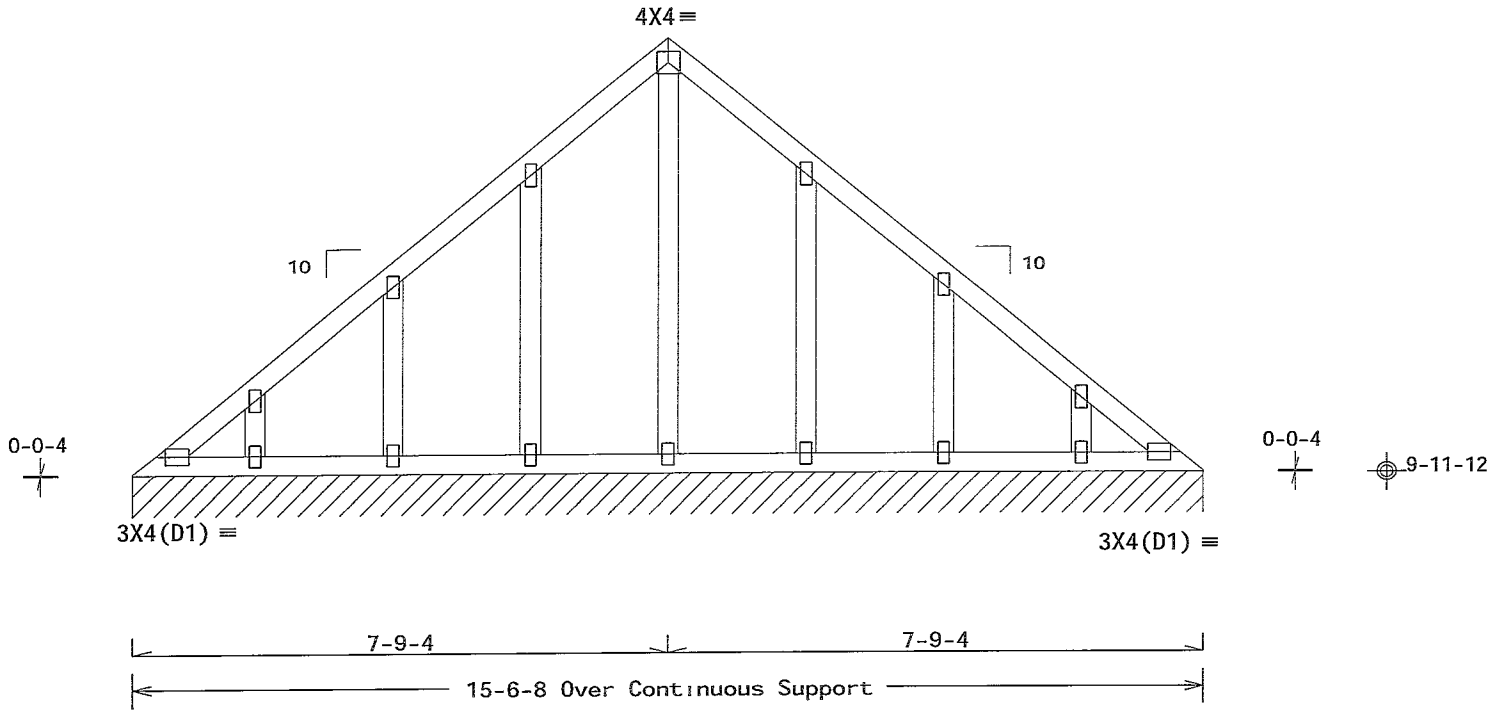

R=80 PLF U=0 PLF W=15-6-8
RL=8/-8 PLF

Note· All Plates Are 2X4 Except As Shown.

Design Crit: FBC2010Res/TPI-2007(STD)
FT/RT=20%(0%)/10(0)

PLT TYP. Wave

12-03-03 62523 14 QTY:1 FL/-/5/-/-/R/- Scale =.375"/Ft.

ALPINE
ITW Building Components Group Inc.
Orlando FL, 32837
FL COA #0 278

WARNING READ AND FOLLOW ALL NOTES ON THIS SHEET!
IMPORTANT FURNISH THIS DESIGN TO ALL CONTRACTORS INCLUDING INSTALLERS

Trusses require extreme care in fabricating handling shipping installing and bracing Refer to and follow the latest edition of BCSI (Building Component Safety Informat on by TPI and WTCA) for safety practices prior to perform ng these functions Installers shall prov de temporary bracing per BCSI. Unless noted otherwise top chord shall have properly attached structural sheathing and bottom chords shall have a properly attached rigid ceiling Locations shown for permanent lateral restraint of webs shall have bracing installed per BCSI sections B3 B7 or B10 as applicable

ITW Building Components Group Inc (ITWBCG) shall not be responsible for any deviation from this design, any failure to bu ld the truss in conformance with ANSI/TPI 1 or for handling shipping installation and bracing of trusses Apply plates to each face of truss and position as shown above and on the joints. Details unless noted otherwise Refer to drawings 160A-Z for standard plate positions A seal on this drawing or cover page listing this drawing indicates acceptance of professional engineering responsibility solely for the design shown The suitability and use of this design for any structure is the responsibility of the Building Designer per ANSI/TPI 1 Sec 2 For more information see This design general notes page ITW-BCG www itwbcg com TPI www tpinst org WTCA www sbcindustry com; ICC www iccsafe org

WILLIAM H. KRICK
LICENSED
No. 70861
STATE OF FLORIDA
PROFESSIONAL ENGINEER
08/28/2013

TC LL	20.0 PSF	REF	R215-- 62523
TC DL	10.0 PSF	DATE	08/28/13
BC DL	10.0 PSF	DRW	HCUSR215 13240005
BC LL	0.0 PSF	HC-ENG	KD/AP
TOT.LD.	40.0 PSF	SEQN-	380810
DUR.FAC.	1.25	FROM	CDM
SPACING	24.0"	JREF-	1UZ6215_Z01

(8320-/SMITH RES.--LAKE CITY /S&S CONSTRUCTION -- LAKE CITY, FL - C2)

Top chord 2x4 SP 2400f-2.0E
Bot chord 2x8 SP 2400f-2.0E
Webs 2x4 SP 2400f-2.0E
Lt Wedge 2x6 SP 2400f-2.0E· Rt Wedge 2x6 SP 2400f-2.0E·

Special loads
------(Lumber Dur.Fac.=1.25 / Plate Dur.Fac.=1.25)
TC- From 60 plf at 0.00 to 60 plf at 7.77
TC- From 60 plf at 7.77 to 60 plf at 15.54
BC- From 10 plf at 0.00 to 10 plf at 15.54
BC- 2644.15 lb Conc. Load at 1.48, 3.48, 5.48, 7.48
9.48,11.48,13.48

130 mph wind, 15.00 ft mean hgt, ASCE 7-10, CLOSED bldg, Located anywhere in roof, RISK CAT II, EXP B, wind TC DL=5.0 psf, wind BC DL=5.0 psf. GCpi(+/-)=0.18

Bottom chord checked for 10.00 psf non-concurrent live load.

The overall height of this truss excluding overhang is 6-10-8.

2 COMPLETE TRUSSES REQUIRED

Nail Schedule:0.131"x3", min. nails
Top Chord 1 Row @12.00" o.c.
Bot Chord: 3 Rows @ 3.75" o.c. (Each Row)
Webs · 1 Row @ 4" o.c.
Use equal spacing between rows and stagger nails in each row to avoid splitting.

Brg blocks 0.131"x3", min. nails

brg	x-loc	#blocks	length/blk	#nails/blk	wall plate
1	0.000'	1	12"	14	Rigid Surface
2	15.250'	1	12"	8	Rigid Surface

Brg block to be same size and species as chord.
Refer to drawing CNNAILSP0109 for more information.

Wind loads and reactions based on MWFRS.

Deflection meets L/360 live and L/240 total load. Creep increase factor for dead load is 1.50.

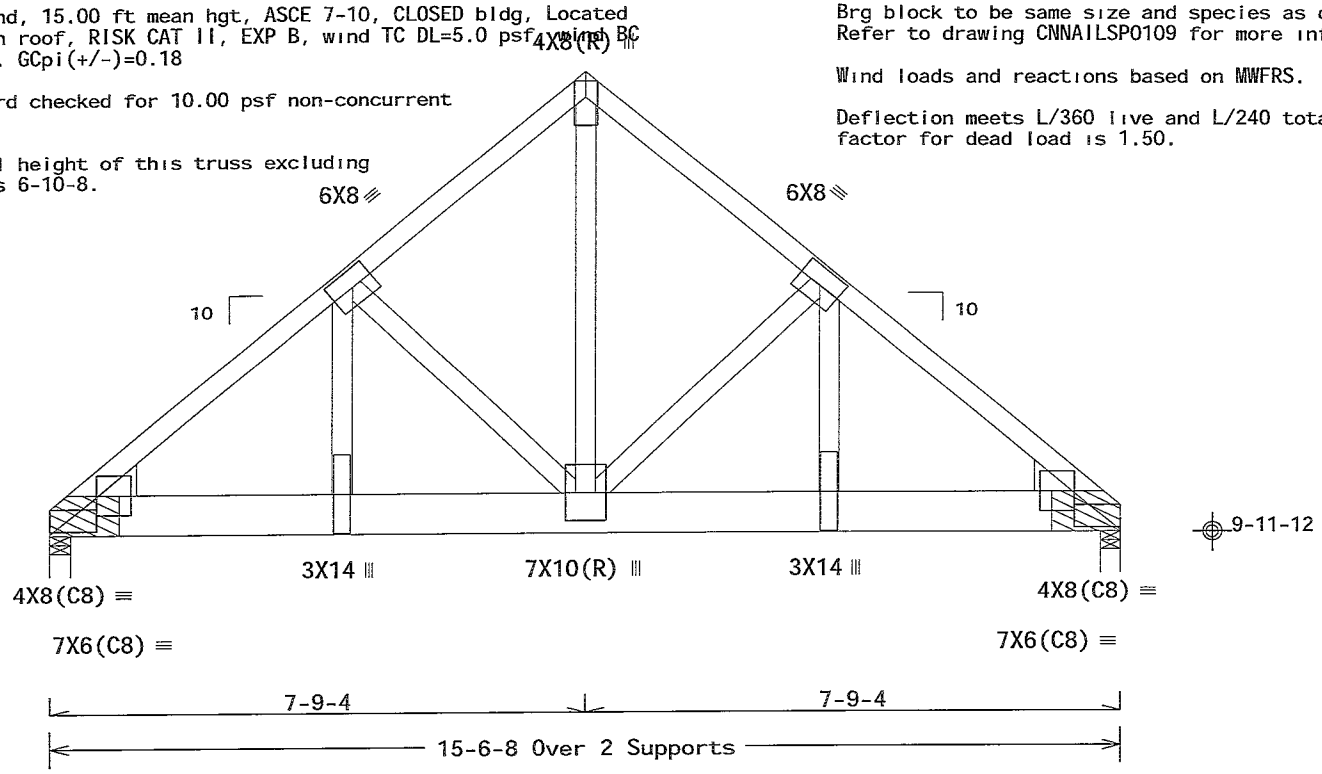

R=10153 U=201 W=3.5" (3.5" min.)
RL=131/-131

R=9444 U=192 W=3.5" (3.5" min.)

Design Crit. FBC2010Res/TPI-2007(STD)
FT/RT=20%(0%)/10(0)

PLT TYP. Wave

12/03/13 09:23:14 QTY:1 FL/-/5/-/-/R/- Scale =.375"/Ft.

ALPINE
ITW Building Components Group Inc.
Orlando FL, 32837
FL COA #0 278

WARNING READ AND FOLLOW ALL NOTES ON THIS SHEET!
IMPORTANT FURNISH THIS DESIGN TO ALL CONTRACTORS INCLUDING INSTALLERS

Trusses require extreme care in fabricating handling shipping installing and bracing Refer to and follow the latest edition of BCSI (Building Component Safety Information by TPI and WTCA) for safety practices prior to performing these functions installers shall provide temporary bracing per BCSI Unless noted otherwise top chord shall have properly attached structural sheathing and bottom chord shall have a properly attached rigid ceiling Locations shown for permanent lateral restraint of webs shall have bracing installed per BCSI sections B3 B7 or B10 as applicable

ITW Building Components Group Inc (ITWBCG) shall not be responsible for any deviation from this design, any failure to build the truss in conformance with ANSI/TPI 1 or for handling shipping installation & bracing of trusses Apply plates to each face of truss and position as shown above and on the joints Details unless noted otherwise Refer to drawings 160A-Z for standard plate positions A seal on this drawing or cover page listing this drawing indicates acceptance of professional engineering responsibility solely for the design shown The suitability and use of this design for any structure is the responsibility of the Building Designer per ANSI/TPI 1 Sec 2 For more information see this job general notes page ITW-BCG www itwbcg com, TPI www tpinst org WTCA www sbcindustry com, ICC www iccsafe org

WILLIAM H. KRICK LICENSE No. 70861 STATE OF FLORIDA PROFESSIONAL ENGINEER
08/28/2013

TC LL	20.0 PSF	REF	R215-- 62524
TC DL	10.0 PSF	DATE	08/28/13
BC DL	10.0 PSF	DRW	HCUSR215 13240034
BC LL	0.0 PSF	HC-ENG	KD/AP
TOT.LD.	40.0 PSF	SEQN-	381430
DUR.FAC.	1.25	FROM	CDM
SPACING	24.0"	JREF-	1UZ6215_Z01

(8320-/SMITH RES.--LAKE CITY /S&S CONSTRUCTION -- LAKE CITY, FL - D1)

Top chord 2x4 SP 2400f-2.0E
Bot chord 2x4 SP 2400f-2.0E
Webs 2x4 SP 2400f-2.0E

See DWGS A14030ENC100212 & GBLLETIN0212 for more requirements.

(a) Continuous lateral bracing equally spaced on member.

In lieu of structural panels use purlins to brace all flat TC @ 24" OC.

Deflection meets L/240 live and L/180 total load. Creep increase factor for dead load is 1.50.

+ MEMBER TO BE LATERALLY BRACED FOR HORIZONTAL WIND LOADS. BRACING SYSTEM TO BE DESIGNED AND FURNISHED BY OTHERS.

Design Dead Loads based on material weight adjusted for slope TC 1.00 PSF

130 mph wind, 15.79 ft mean hgt, ASCE 7-10, CLOSED bldg, Located anywhere in roof, RISK CAT II, EXP B, wind TC DL=5.0 psf, wind BC DL=5.0 psf. GCpi(+/-)=0.18

Wind loads and reactions based on MWFRS with additional C&C member design.

Bottom chord checked for 10.00 psf non-concurrent live load.

The overall height of this truss excluding overhang is 11-4-1.

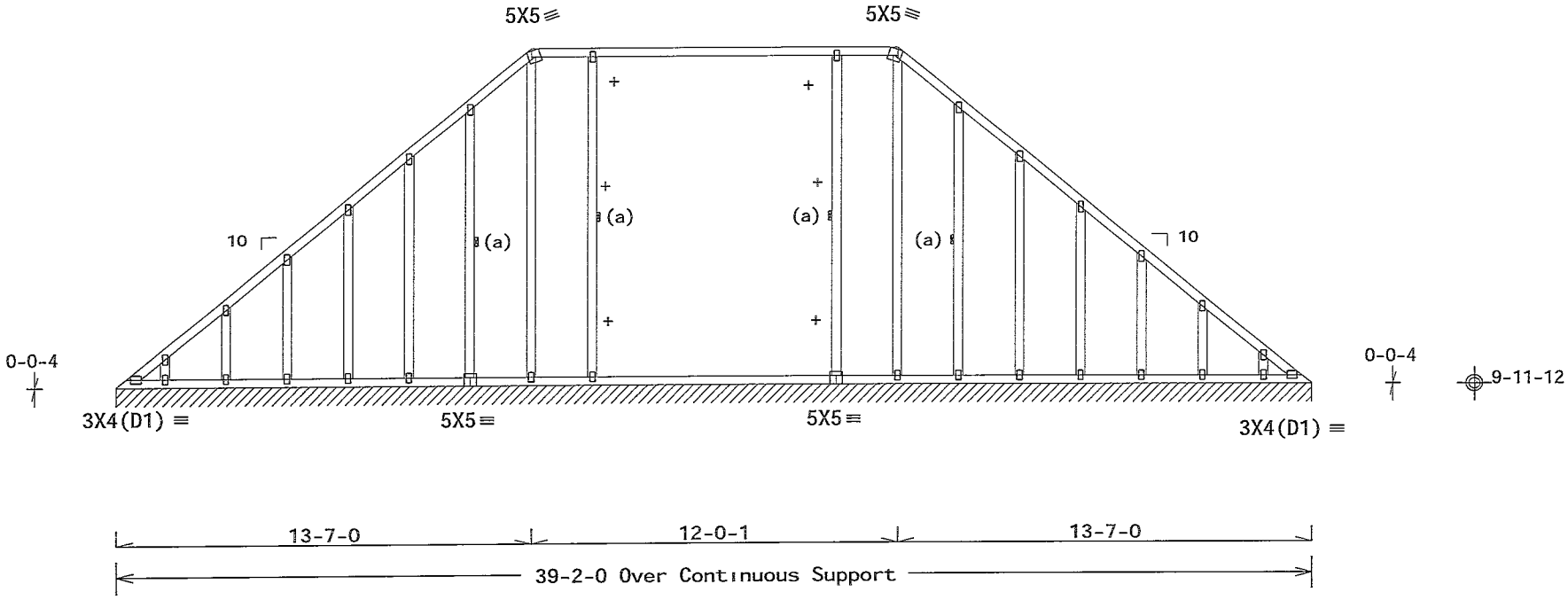

R=79 PLF U=2 PLF W=39-2-0
RL=6/-6 PLF

Note: All Plates Are 2X4 Except As Shown.

Design Crit: FBC2010Res/TPI-2007(STD)
FT/RT=20%(0%)/10(0)

PLT TYP. Wave

12.53.02.0225.14 QTY:1 FL/-/5/-/-/R/- Scale =.1875"/Ft.

ALPINE
ITW Building Components Group Inc.
Orlando FL, 32837
FL COA #0 278

WARNING READ AND FOLLOW ALL NOTES ON THIS SHEET!
IMPORTANT FURNISH THIS DESIGN TO ALL CONTRACTORS INCLUDING INSTALLERS

Trusses require extreme care in fabricating handling shipping installing and bracing Refer to and follow the latest edition of BCSI (Building Component Safety Information by TPI and WTCA) for safety practices prior to performing these functions Installers shall provide temporary bracing per BCSI Unless noted otherwise top chord shall have properly attached structural sheathing and bottom chord shall have a properly attached rigid ceiling Locations shown for permanent lateral restraint of webs shall have bracing installed per BCSI sections B3 B7 or B10 as applicable

ITW Building Components Group Inc (ITWBCG) shall not be responsible for any deviation from this design, any failure to build the truss in conformance with ANSI/TPI 1 or for handling shipping installation & bracing of trusses Apply plates to each face of truss and position as shown above and on the Joint Details unless noted otherwise Refer to drawings 160A-Z for standard plate positions A seal on this drawing or cover page listing this drawing indicates acceptance of professional engineering responsibility solely for the design shown The suitability and use of this design for any structure is the responsibility of the Building Designer per ANSI/TPI 1 Sec 2 For more information see this job general notes page ITW-BCG www itwbcg com, TPI www tpinst org WTCA www sbcindustry com, ICC www iccsafe org

WILLIAM H. KRICK
LICENSE
No. 70861
STATE OF FLORIDA
PROFESSIONAL ENGINEER
08/28/2013

TC LL	20.0 PSF	REF	R215-- 62525
TC DL	10.0 PSF	DATE	08/28/13
BC DL	10.0 PSF	DRW	HCUSR215 13240006
BC LL	0.0 PSF	HC-ENG	KD/AP
TOT.LD.	40.0 PSF	SEQN-	380986
DUR.FAC.	1.25	FROM	CDM
SPACING	24.0"	JREF-	1UZ6215_Z01

(8320-/SMITH RES.--LAKE CITY /S&S CONSTRUCTION -- LAKE CITY, FL - D2)

Top chord 2x4 SP 2400f-2.0E :T3 2x8 SP 2400f-2.0E.
Bot chord 2x10 SP 2400f-2.0E ·B1, B6 2x6 SP 2400f-2.0E:
·B3 2x4 SP 2400f-2.0E.
Webs 2x4 SP 2400f-2.0E
Lt Wedge 2x6 SP 2400f-2.0E::Rt Wedge 2x6 SP 2400f-2.0E·

(**) 1 plate(s) require special positioning. Refer to scaled plate plot details for special positioning requirements.

In lieu of structural panels use purlins to brace all flat TC @ 24" OC.

Bottom chord checked for 10.00 psf non-concurrent live load.

BC attic room floor loading: LL = 40.00 psf; DL = 10.00 psf, from 12-3-0 to 27-8-0.

The overall height of this truss excluding overhang is 11-7-9

Design Dead Loads based on material weight adjusted for slope· TC 1.00 PSF

(I) - plates so marked were sized using a Fabrication Tolerance of 0% and a Rotational Tolerance of 0 degrees.

130 mph wind, 15.30 ft mean hgt, ASCE 7-10, CLOSED bldg, Located anywhere in roof, RISK CAT II, EXP B, wind TC DL=5.0 psf, wind BC DL=5.0 psf. GCpi(+/-)=0.18

Wind loads and reactions based on MWFRS with additional C&C member design.

Collar-tie braced with continuous lateral bracing at 24" OC. or rigid ceiling.

Deflection meets L/360 live and L/240 total load. Creep increase factor for dead load is 1.50.

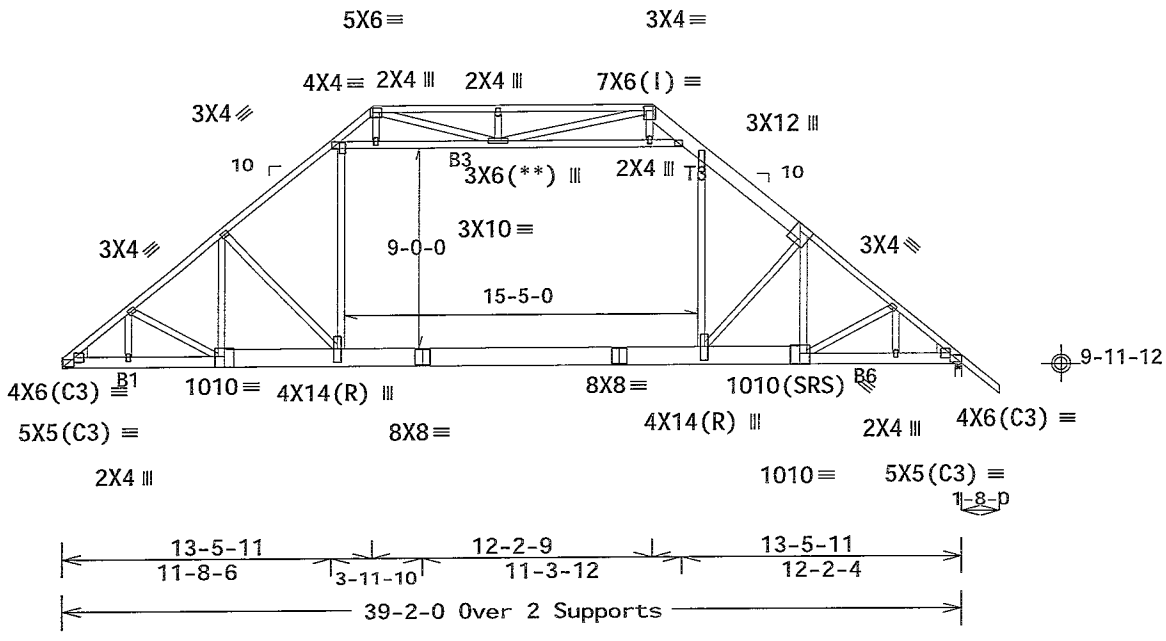

Design Crit: FBC2010Res/TPI-2007(STD)
FT/RT=20%(0%)/10(0)

PLT TYP. Wave | 18-03-03 03:25:44 | QTY:7 | FL/-/5/-/-/R/- | Scale =.125"/Ft.

ALPINE
ITW Building Components Group Inc.
Orlando FL, 32837
FL COA #0 278

WARNING READ AND FOLLOW ALL NOTES ON THIS SHEET!
IMPORTANT FURNISH THIS DESIGN TO ALL CONTRACTORS INCLUDING INSTALLERS

Trusses require extreme care in fabricating handling shipping installing and bracing Refer to and follow the latest edition of BCSI (Building Component Safety Information by TPI and WTCA) for safety practices prior to performing these functions Installers shall provide temporary bracing per BCSI Unless noted otherwise top chord shall have properly attached structural sheathing and bottom chord shall have a properly attached rigid ceiling Locations shown for permanent lateral restraint of webs shall have bracing installed per BCSI sections B3 B7 or B10 as applicable

ITW Building Components Group Inc (ITWBCG) shall not be responsible for any deviation from this design any failure to build the truss in conformance with ANSI/TPI 1 or for handling shipping installation & bracing of trusses Apply plates to each face of truss and position as shown above and on the Joint Details unless noted otherwise Refer to drawings 160A-Z for standard plate positions A seal on this drawing or cover page listing this drawing indicates acceptance of professional engineering responsibility solely for the design shown The suitability and use of this design for any structure is the responsibility of the Building Designer per ANSI/TPI 1 Sec 2 For more information see This Job general notes page ITW-BCG www itwbcg com TPI www tpinst org WTCA www sbcindustry com ICC www icecsafe org

WILLIAM H. KRICK LICENSE No. 70861 STATE OF FLORIDA PROFESSIONAL ENGINEER
08/28/2013

TC LL	20.0 PSF	REF	R215-- 62526
TC DL	10.0 PSF	DATE	08/28/13
BC DL	10.0 PSF	DRW	HCUSR215 13240007
BC LL	0.0 PSF	HC-ENG	KD/AP
TOT.LD.	40.0 PSF	SEQN-	381428
DUR.FAC.	1.25	FROM	CDM
SPACING	24.0"	JREF-	1UZ6215_Z01

(8320-/SMITH RES.--LAKE CITY /S&S CONSTRUCTION -- LAKE CITY, FL - D3)

Top chord 2x4 SP 2400f-2.0E
Bot chord 2x10 SP 2400f-2.0E ·B1, B6 2x6 SP 2400f-2 0E
.B3 2x4 SP 2400f-2.0E·
Webs 2x4 SP 2400f-2.0E

130 mph wind, 15.99 ft mean hgt, ASCE 7-10, CLOSED bldg, Located anywhere in roof, RISK CAT II, EXP B, wind TC DL=5.0 psf, wind BC DL=5.0 psf. GCpi(+/-)=0.18

Calculated horizontal deflection is 0.12" due to live load and 0.22" due to dead load

Bottom chord checked for 10.00 psf non-concurrent live load.

BC attic room floor loading: LL = 40.00 psf; DL = 10.00 psf; from 12-3-0 to 27-8-0.

The overall height of this truss excluding overhang is 11-7-9.

Design Dead Loads based on material weight adjusted for slope TC· 1.00 PSF

(**) 1 plate(s) require special positioning. Refer to scaled plate plot details for special positioning requirements.

Wind loads and reactions based on MWFRS with additional C&C member design.

In lieu of structural panels use purlins to brace all flat TC @ 24" OC.

Collar-tie braced with continuous lateral bracing at 24" OC. or rigid ceiling.

Deflection meets L/360 live and L/240 total load. Creep increase factor for dead load is 1.50.

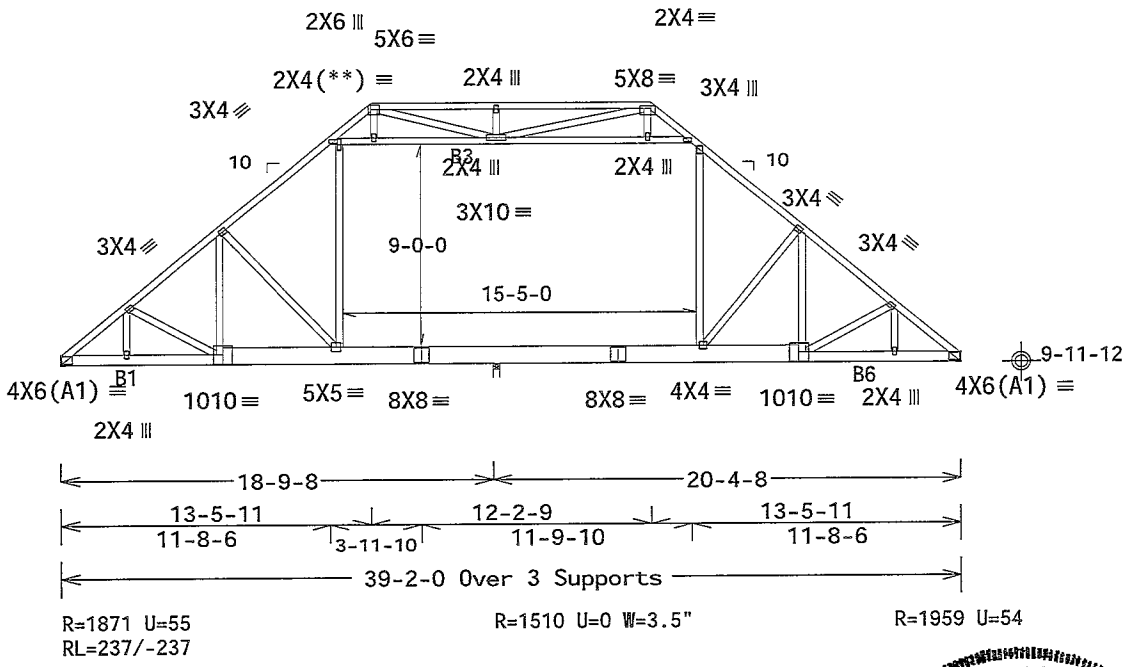

Design Crit. FBC2010Res/TPI-2007(STD)
FT/RT=20%(0%)/10(0)

PLT TYP. Wave

QTY:12 FL/-/5/-/-/R/-

Scale =.125"/Ft.

ALPINE
ITW Building Components Group Inc.
Orlando FL, 32837
FL COA #0 278

WARNING READ AND FOLLOW ALL NOTES ON THIS SHEET!
IMPORTANT FURNISH THIS DESIGN TO ALL CONTRACTORS INCLUDING INSTALLERS

Trusses require extreme care in fabr cating handling sh pping install ng and bracing Refer to and follow the latest ed t on of BCSI (Build ng Component Safety Informat on by TPI and WTCA) for safety practices prior to performing these funct ons Installers shall prov de temporary bracing per BCSI Unless noted otherwise top chord shall have properly attached structural sheathing and bottom chord shall have a properly attached r gid ceiling Locat ons shown for permanent lateral restraint of webs shall have bracing installed per BCSI sections B3 B7 or B10 as applicable

ITW Building Components Group Inc (ITWBCG) shall not be respons ble for any deviation from this design, any failure to build the truss in conformance with ANSI/TPI 1 or for handling shipp ng installation & bracing of trusses Apply plates to each face of truss and posit on as shown above and on the individ al Details unless noted otherw se Refer to draw ngs 160A-Z for standard plate pos t ons A seal on this drawing or cover page listing this drawing ind cates acceptance of professional engineering responsibility solely for the des gn shown The suitability and use of th s des gn for any structure is the respons b lity of the Building Des gner per ANSI/TPI 1 Sec 2 For more informat on see this job general notes page ITW-BCG www twbcg com TPI www tpinst org WTCA www sbcindustry com, ICC www iccsafe org

WILLIAM H. KRICK LICENSED No. 70861 STATE OF FLORIDA PROFESSIONAL ENGINEER
08/28/2013

TC LL	20.0 PSF	REF	R215-- 62527
TC DL	10.0 PSF	DATE	08/28/13
BC DL	10.0 PSF	DRW	HCUSR215 13240031
BC LL	0.0 PSF	HC-ENG	KD/AP
TOT.LD.	40.0 PSF	SEQN-	381353
DUR.FAC.	1.25	FROM	CDM
SPACING	24.0"	JREF-	1UZ6215_Z01

Top chord 2x4 SP 2400f-2.0E
Bot chord 2x10 SP 2400f-2.0E :B1, B6 2x6 SP 2400f-2.0E·
.B3, B7 2x4 SP 2400f-2.0E.
Webs 2x4 SP 2400f-2.0E

130 mph wind, 15.94 ft mean hgt, ASCE 7-10, CLOSED bldg, Located anywhere in roof, RISK CAT II, EXP B, wind TC DL=5.0 psf, wind BC DL=5.0 psf. GCpi(+/-)=0.18

In lieu of structural panels use purlins to brace all flat TC @ 24" OC.

BC attic room floor loading: LL = 40.00 psf; DL = 10.00 psf, from 12-3-0 to 27-8-0.

WARNING· Furnish a copy of this DWG to the installation contractor Special care must be taken during handling, shipping and installation of trusses. See "WARNING" note below.

Design Dead Loads based on material weight adjusted for slope TC· 1.00 PSF

(**) 1 plate(s) require special positioning. Refer to scaled plate plot details for special positioning requirements.

Wind loads and reactions based on MWFRS with additional C&C member design.

Bottom chord checked for 10.00 psf non-concurrent live load.

Collar-tie braced with continuous lateral bracing at 24" OC. or rigid ceiling

Deflection meets L/360 live and L/240 total load. Creep increase factor for dead load is 1.50.

The overall height of this truss excluding overhang is 11-7-9.

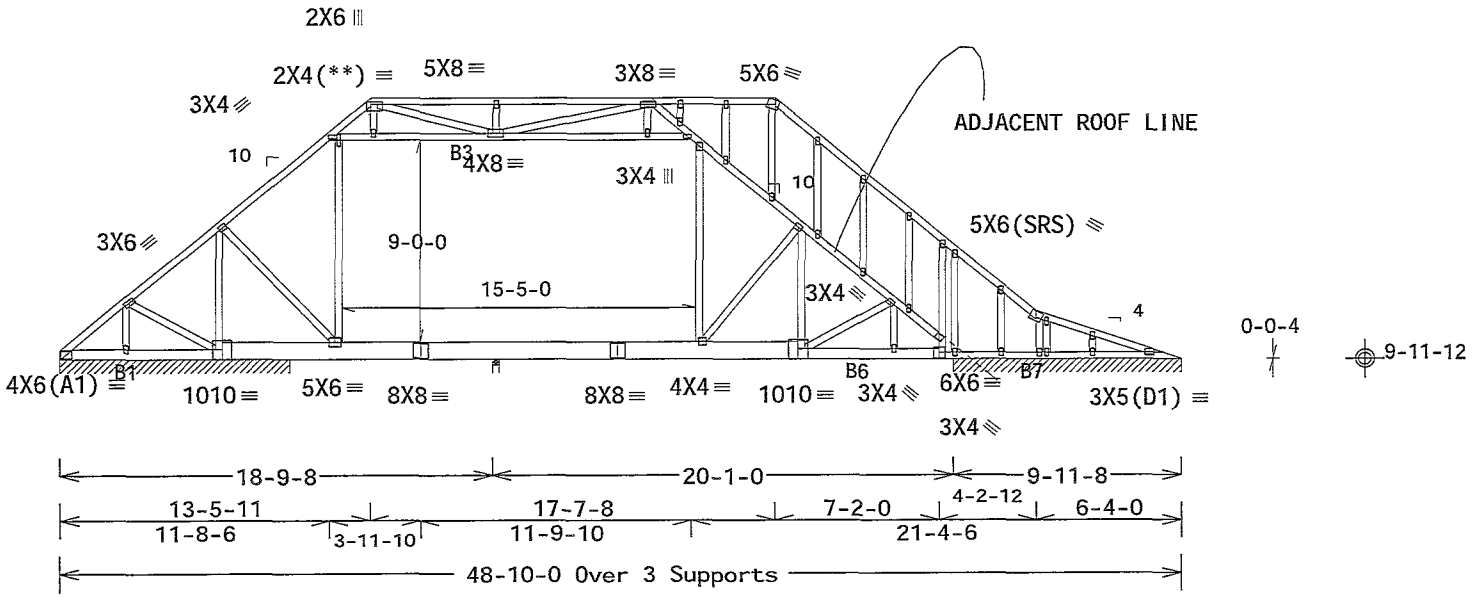

R=203 PLF U=8 PLF W=10-0-0
RL=24/-24 PLF

R=1477 U=0 W=3.5" (3.5" min.)

R=258 PLF U=8 PLF W=9-11-8

Note: All Plates Are 2X4 Except As Shown.

Design Crit. FBC2010Res/TPI-2007(STD)

PLT TYP. Wave

FT/RT=20%(0%)/10(0)

12-33-06 R225.14 QTY:1 FL/-/5/-/-/R/- Scale =.125"/Ft.

ALPINE
ITW Building Components Group Inc.
Orlando FL, 32837
FL COA #0 278

WARNING READ AND FOLLOW ALL NOTES ON THIS SHEET!
IMPORTANT FURNISH THIS DESIGN TO ALL CONTRACTORS INCLUDING INSTALLERS

Trusses require extreme care in fabricating handling shipp ng installing and bracing Refer to and follow the latest edition of BCSI (Building Component Safety Information by TPI and WTCA) for safety practices prior to performing these functions Installers shall prov de temporary brac ng per BCSI. Unless noted otherwise top chord shall have properly attached structural sheath ng and bottom chord shall have a properly attached rigid ce ling Locations shown for permanent lateral restraint of webs shall have bracing installed per BCSI sections B3 B7 or B10 as appl cable.

ITW Bu lding Components Group Inc (ITWBCG) shall not be responsible for any deviation from this design, any failure to bu ld the truss in conformance with ANSI/TPI 1 or for handling shipping installation & bracing of trusses Apply plates to each face of truss and pos t on as shown above and on the Joint Details unless noted otherwise Refer to drawings 160A-Z for standard plate positions. A seal on this drawing or cover page listing this drawing indicates acceptance of profess onal engineering responsibility solely for the design shown The suitability and use of th s design for any structure is the responsibility of the Building Designer per ANSI/TPI 1 Sec 2 For more information see This job general notes page ITW-BCG www itwbcg com TPI www tpinst org WTCA www sbcindustry com ICC www ccsafe org

WILLIAM H. KRICK LICENSE No. 70861 STATE OF FLORIDA PROFESSIONAL ENGINEER
08/28/2013

TC LL	20.0 PSF	REF R215-- 62528
TC DL	10.0 PSF	DATE 08/28/13
BC DL	10.0 PSF	DRW HCUSR215 13240024
BC LL	0.0 PSF	HC-ENG KD/AP
TOT.LD.	40.0 PSF	SEQN- 381405
DUR.FAC.	1.25	FROM CDM
SPACING	24.0"	JREF- 1UZ6215_Z01

(8320-/SMITH RES.--LAKE CITY /S&S CONSTRUCTION -- LAKE CITY, FL - D5)

Top chord 2x4 SP 2400f-2 0E
Bot chord 2x10 SP 2400f-2 0E B1, B6 2x6 SP 2400f-2 0E
Webs 2x4 SP 2400f-2 0E

(**) 1 plate(s) require special positioning Refer to scaled plate plot details for special positioning requirements.

130 mph wind, 15 30 ft mean hgt, ASCE 7-10, CLOSED bldg, not located within 13 00 ft from roof edge, RISK CAT II EXP B, wind TC DL=5 0 psf, wind BC DL=5 0 psf GCpi(+/-)=0.18

Wind loads and reactions based on MWFRS with additional C&C member design

Left cantilever is exposed to wind

(a) Continuous lateral bracing equally spaced on member

In lieu of structural panels use purlins to brace all flat TC @ 24 OC.

Truss passed check for 20 psf additional bottom chord live load in areas with 42"-high x 24 -wide clearance

Collar-tie braced with continuous lateral bracing at 24" OC. or rigid ceiling.

BC attic room floor loading LL = 40 00 psf, DL = 10 00 psf from 12-3-0 to 27-8-0.

Deflection meets L/360 live and L/240 total load Creep increase factor for dead load is 1 50.

WARNING Furnish a copy of this DWG to the installation contractor Special care must be taken during handling, shipping and installation of trusses. See "WARNING" note below

The overall height of this truss excluding overhang is 11-7-9

MWFRS loads based on trusses located at least 30 60 ft. from roof edge.

Design Dead Loads based on material weight adjusted for slope TC 1 00 PSF

Special loads
------(Lumber Dur.Fac =1 25 / Plate Dur Fac =1 25)
TC- From 60 plf at -1 67 to 60 plf at 0.00
TC- From 60 plf at 0.00 to 60 plf at 12.25
TC- From 86 plf at 12 25 to 86 plf at 13 48
TC- From 81 plf at 13 48 to 81 plf at 22 52
TC- From 81 plf at 22 52 to 81 plf at 31 56
TC- From 60 plf at 31.56 to 60 plf at 32.98
TC- From 60 plf at 32.98 to 60 plf at 42.65
TC- From 60 plf at 42 65 to 60 plf at 48.83
TC- From 60 plf at 48.83 to 60 plf at 50.50
PLT- From 100 plf at 12 25 to 100 plf at 15 46
PLT- From 100 plf at 15 46 to 100 plf at 23 46
PLT- From 100 plf at 23 46 to 100 plf at 27 67
BC- From 5 plf at -1 67 to 5 plf at 0 00
BC- From 20 plf at 0 00 to 20 plf at 29 88
BC- From 60 plf at 29 88 to 60 plf at 32.21
BC- From 20 plf at 32 21 to 20 plf at 48 83
BC- From 4 plf at 48 83 to 4 plf at 50 50
BC- 180 00 lb Conc. Load at 12 25,27 67

Bottom chord checked for 10 00 psf non-concurrent live load

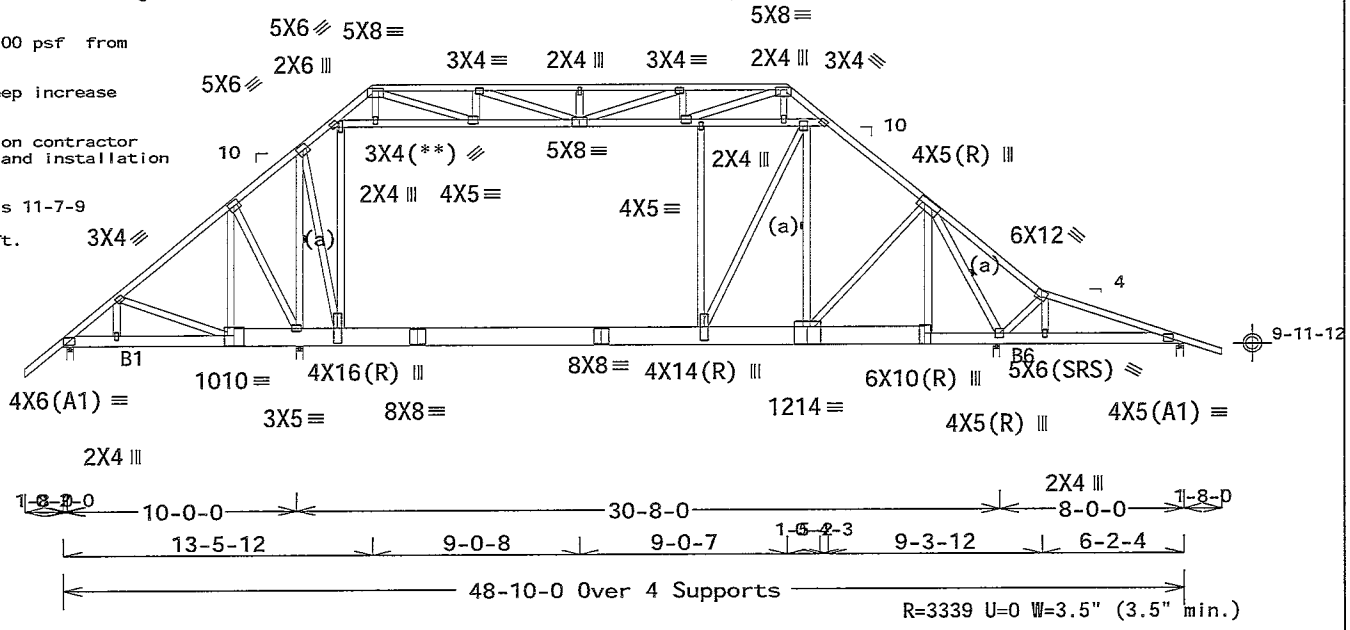

Design Crit: FBC2010Res/TPI-2007(STD)
FT/RT=20%(0%)/10(0)

PLT TYP. Wave

QTY:5 FL/-/5/-/-/R/- Scale =.125"/Ft.

TC LL	20.0 PSF	REF	R215-- 62529
TC DL	10.0 PSF	DATE	08/28/13
BC DL	10.0 PSF	DRW	HCUSR215 13240025
BC LL	0.0 PSF	HC-ENG	KD/AP
TOT.LD.	40.0 PSF	SEQN-	381401
DUR.FAC.	1.25	FROM	CDM
SPACING	24.0"	JREF-	1UZ6215_Z01

WILLIAM H. KRICK LICENSE No. 70861 STATE OF FLORIDA PROFESSIONAL ENGINEER
08/28/2013

ALPINE
ITW Building Components Group Inc.
Orlando FL, 32837
FL COA #0 278

WARNING READ AND FOLLOW ALL NOTES ON THIS SHEET!
IMPORTANT FURNISH THIS DESIGN TO ALL CONTRACTORS INCLUDING INSTALLERS

Trusses require extreme care in fabr cating handl ng shipping install ng and bracing Refer to and follow the latest ed tion of BCSI (Bu ld ng Component Safety Information by TPI and WTCA) for safety practices prior to performing these funct ons Installers shall provide temporary bracing per BCSI Unless noted otherwise top chord shall have properly attached structural sheathing and bottom chord shall have a properly attached r g d ceil ng Locations shown for permanent lateral restraint of webs shall have brac ng installed per BCSI sections B3 B7 or B10 as applicable

ITW Building Components Group Inc (ITWBCG) shall not be responsible for any deviation from this design, any failure to build the truss in conformance with ANSI/TPI 1 or for handling shipp ng installation & bracing of trusses Apply plates to each face of truss and position as shown above and on the individual Details unless noted otherw se Refer to draw ngs 160A-Z for standard plate positions A seal on this draw ng or cover page l st ng this drawing ind cates acceptance of profess onal engineering responsibility solely for the design shown The suitability and use of this design for any structure is the responsib lity of the Bu lding Designer per ANSI/TPI 1 Sec 2 For more information see This job general notes page ITW-BCG www itwbcg com TPI www tpinst org WTCA www sbc ndustry com, ICC www iccsafe org

(8320-/SMITH RES.--LAKE CITY /S&S CONSTRUCTION -- LAKE CITY, FL - D6)

Top chord 2x4 SP 2400f-2 0E
Bot chord 2x10 SP 2400f-2.0E B1, B6 2x6 SP 2400f-2 0E
Webs 2x4 SP 2400f-2 0E

Design Dead Loads based on material weight adjusted for slope TC 1.00 PSF

Special loads
------(Lumber Dur Fac =1 25 / Plate Dur Fac.=1 25)
TC- From 93 plf at -1.67 to 93 plf at 0 00
TC- From 93 plf at 0 00 to 93 plf at 12 25
TC- From 133 plf at 12 25 to 133 plf at 13 48
TC- From 125 plf at 13 48 to 125 plf at 22.52
TC- From 125 plf at 22 52 to 125 plf at 31 56
TC- From 93 plf at 31 56 to 93 plf at 32 98
TC- From 93 plf at 32 98 to 93 plf at 42 65
TC- From 93 plf at 42 65 to 93 plf at 48 83
TC- From 93 plf at 48 83 to 93 plf at 50 50
PLT- From 154 plf at 12 25 to 154 plf at 15 46
PLT- From 154 plf at 15.46 to 154 plf at 23.46
PLT- From 154 plf at 23.46 to 154 plf at 27.67
BC- From 8 plf at -1.67 to 8 plf at 0 00
BC- From 31 plf at 0 00 to 31 plf at 29 88
BC- From 93 plf at 29 88 to 93 plf at 32 21
BC- From 31 plf at 32 21 to 31 plf at 48 83
BC- From 7 plf at 48.83 to 7 plf at 50 50
BC- 502 00 lb Conc Load at 12 08
BC- 277 50 lb Conc Load at 12 25,27 67
BC- 261.60 lb Conc Load at 7 02, 9.02
BC- -224.09 lb Conc Load at 11 02
BC- -184.35 lb Conc. Load at 13.02,15.02,17.02

In lieu of structural panels use purlins to brace TC @ 24" OC

Bottom chord checked for 10 00 psf non-concurrent live load

Trusses to be spaced at 37 0" OC maximum

Collar-tie braced with continuous lateral bracing at 24 OC

Deflection meets L/360 live and L/240 total load Creep increase factor for dead load is 1.50.

WARNING Furnish a copy of this DWG to the installation contractor Special care must be taken during handling, shipping and installation of trusses See "WARNING" note below

The overall height of this truss excluding overhang is 11-7-9

2 COMPLETE TRUSSES REQUIRED

Nail Schedule 0 131"x3 , min. nails
Top Chord 1 Row @11 00 o c
Bot Chord 1 Row @12 00" o c.
Webs 1 Row @ 4" o c
Use equal spacing between rows and stagger nails in each row to avoid splitting

Negative reaction(s) of -206# MAX (See below) from a non-wind load case requires uplift connection

(**) 1 plate(s) require special positioning Refer to scaled plate plot details for special positioning requirements.

130 mph wind, 15 30 ft mean hgt, ASCE 7-10, CLOSED bldg, Located anywhere in roof, RISK CAT II, EXP B, wind TC DL=5 0 psf, wind BC DL=5 0 psf GCpi(+/-)=0 18

Wind loads and reactions based on MWFRS

Left cantilever is exposed to wind

MWFRS loads based on trusses located at least 30 60 ft from roof edge

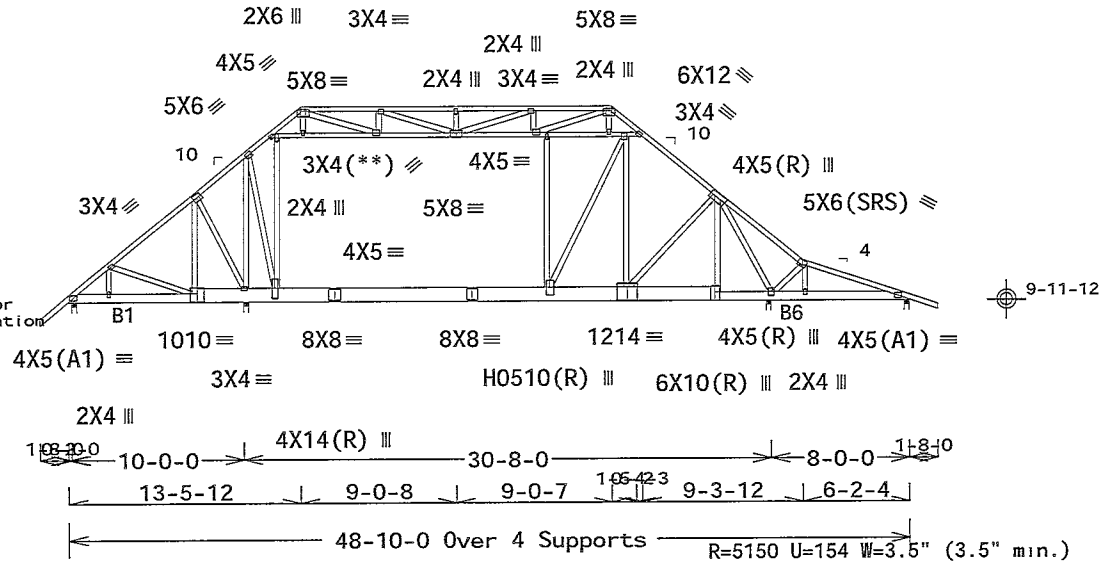

Design Crit: FBC2010Res/TPI-2007(STD)
FT/RT=20%(0%)/10(0)

PLT TYP. 20 Gauge HS,Wave

QTY:4 FL/-/5/-/-/R/- Scale =.09375"/Ft.

TC LL	20.0 PSF	REF	R215-- 62530
TC DL	10.0 PSF	DATE	08/28/13
BC DL	10.0 PSF	DRW	HCUSR215 13240026
BC LL	0.0 PSF	HC-ENG	KD/AP
TOT.LD.	40.0 PSF	SEQN-	381403
DUR.FAC.	1.25	FROM	CDM
SPACING	37.0"	JREF-	1UZ6215_Z01

ALPINE
ITW Building Components Group Inc.
Orlando FL, 32837
FL COA #0 278

WARNING READ AND FOLLOW ALL NOTES ON THIS SHEET!
IMPORTANT FURNISH THIS DESIGN TO ALL CONTRACTORS INCLUDING INSTALLERS

Trusses require extreme care in fabricating handling shipping installing and bracing Refer to and follow the latest edition of BCSI (Building Component Safety Informat on by TPI and WTCA) for safety practices prior to perform ng these functions Installers shall prov de temporary bracing per BCSI Unless noted otherwise top chord shall have properly attached structural sheathing and bottom chord shall have a properly attached rigid ceiling Locat ons shown for permanent lateral restraint of webs shall have brac ng installed per BCSI sect ons B3 B7 or B10 as applicable

ITW Building Components Group Inc (ITWBCG) shall not be responsible for any dev at on from this design, any failure to build the truss in conformance with ANSI/TPI 1 or for handling shipp ng installation & bracing of trusses Apply plates to each face of truss and position as shown above and on indiv dual truss Details unless noted otherwise Refer to draw ngs 160A-Z for standard plate positions A seal on this drawing or cover page list ng this draw ng indicates acceptance of professional engineering responsibility solely for the design shown The suitab lity and use of this design for any structure is the responsib l ty of the Bu lding Designer per ANSI/TPI 1 Sec 2 For more nformation see ITW-BCG general notes page ITW-BCG www itwbcg com TPI www tp nst org WTCA www sbc ndustry com, ICC www iccsafe org

WILLIAM H. KRICK LICENSE No. 70861 STATE OF FLORIDA PROFESSIONAL ENGINEER
08/28/2013

Top chord 2x4 SP 2400f-2.0E
Bot chord 2x10 SP 2400f-2.0E :B1, B6 2x6 SP 2400f-2.0E
Webs 2x4 SP 2400f-2.0E

130 mph wind, 15.30 ft mean hgt, ASCE 7-10, CLOSED bldg, not located within 13.00 ft from roof edge, RISK CAT II, EXP B, wind TC DL=5.0 psf, wind BC DL=5.0 psf. GCpi(+/-)=0.18

Left cantilever is exposed to wind

In lieu of structural panels use purlins to brace all flat TC @ 24" OC.

Collar-tie braced with continuous lateral bracing at 24" OC. or rigid ceiling.

Deflection meets L/360 live and L/240 total load. Creep increase factor for dead load is 1.50.

The overall height of this truss excluding overhang is 11-7-9.

Design Dead Loads based on material weight adjusted for slope TC 1.00 PSF

(**) 1 plate(s) require special positioning. Refer to scaled plate plot details for special positioning requirements.

Wind loads and reactions based on MWFRS with additional C&C member design.

(a) Continuous lateral bracing equally spaced on member.

Bottom chord checked for 10.00 psf non-concurrent live load.

BC attic room floor loading LL = 40.00 psf; DL = 10.00 psf, from 12-3-0 to 27-8-0.

WARNING *Furnish a copy of this DWG to the installation contractor.* Special care must be taken during handling, shipping and installation of trusses. See "WARNING" note below.

MWFRS loads based on trusses located at least 30.60 ft. from roof edge.

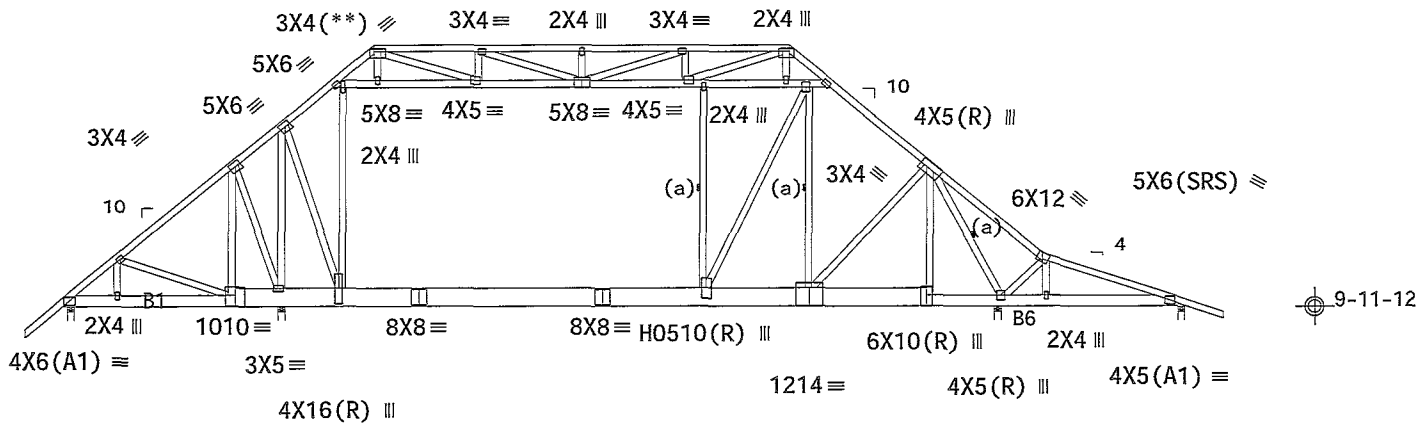

R=2095 U=0 W=3.5" (3.5" min.)
RL=266/-281
R=1409 U=95 W=3.5" (3.5" min.)

R=3244 U=0 W=3.5" (3.5" min.)
R=157 U=24 W=3.5" (3.5" min.)

Design Crit. FBC2010Res/TPI-2007(STD)

PLT TYP. 20 Gauge HS,Wave FT/RT=20%(0%)/10(0) 1.53:1 FL/-/5/-/-/R/- Scale =.125"/Ft.

ALPINE
ITW Building Components Group Inc.
Orlando FL, 32837
FL COA #0 278

WARNING READ AND FOLLOW ALL NOTES ON THIS SHEET!
IMPORTANT FURNISH THIS DESIGN TO ALL CONTRACTORS INCLUDING INSTALLERS

Trusses requ re extreme care in fabricating handling shipp ng installing and brac ng Refer to and follow the latest edition of BCSI (Building Component Safety Information by TPI and WTCA) for safety practices prior to performing these functions Installers shall provide temporary bracing per BCSI Unless noted otherwise top chord shall have properly attached structural sheath ng and bottom chord shall have a properly attached rigid ceiling Locations shown for permanent lateral restraint of webs shall have bracing installed per BCSI sections B3 B7 or B10 as applicable

ITW Building Components Group Inc (ITWBCG) shall not be responsible for any deviation from this design any failure to bu ld the truss n conformance with ANSI/TPI 1 or for handling shipping installation bracing of trusses App y plates to each face of truss and pos t on as shown above and on the individual Details unless noted otherwise Refer to drawings 160A-Z for standard plate positions A seal on this drawing or cover page listing this drawing indicates acceptance of professional eng neering responsibil ty solely for the design shown The su tability and use of th s design for any structure is the responsibility of the Building Designer per ANSI/TPI 1 Sec 2 For more information see This job's general notes page ITW-BCG www itwbcg com TPI www tpinst org WTCA www sbcindustry com. ICC www iccsafe org

WILLIAM H. KRICK LICENSE No. 70861 STATE OF FLORIDA PROFESSIONAL ENGINEER
08/28/2013

TC LL	20.0 PSF	REF	R215-- 62531
TC DL	10.0 PSF	DATE	08/28/13
BC DL	10.0 PSF	DRW	HCUSR215 13240027
BC LL	0.0 PSF	HC-ENG	KD/AP
TOT.LD.	40.0 PSF	SEQN-	381394
DUR.FAC.	1.25	FROM	CDM
SPACING	24.0"	JREF-	1UZ6215_Z01

(8320-/SMITH RES.--LAKE CITY /S&S CONSTRUCTION -- LAKE CITY, FL - D8)

Top chord 2x4 SP 2400f-2.0E
Bot chord 2x10 SP 2400f-2.0E ·B1, B6 2x6 SP 2400f-2.0E
Webs 2x4 SP 2400f-2.0E

130 mph wind, 15.30 ft mean hgt, ASCE 7-10, CLOSED bldg, Located anywhere in roof, RISK CAT II, EXP B, wind TC DL=5.0 psf, wind BC DL=5.0 psf. GCpi(+/-)=0.18

Left cantilever is exposed to wind

In lieu of structural panels use purlins to brace all flat TC @ 24" OC.

Collar-tie braced with continuous lateral bracing at 24" OC. or rigid ceiling.

Deflection meets L/360 live and L/240 total load. Creep increase factor for dead load is 1 50.

The overall height of this truss excluding overhang is 11-7-9.

Design Dead Loads based on material weight adjusted for slope TC· 1.00 PSF

(**) 1 plate(s) require special positioning. Refer to scaled plate plot details for special positioning requirements.

Wind loads and reactions based on MWFRS with additional C&C member design.

(a) Continuous lateral bracing equally spaced on member.

Bottom chord checked for 10 00 psf non-concurrent live load.

BC attic room floor loading LL = 40.00 psf, DL = 10.00 psf, from 12-3-0 to 27-8-0.

WARNING Furnish a copy of this DWG to the installation contractor. Special care must be taken during handling, shipping and installation of trusses. See "WARNING" note below

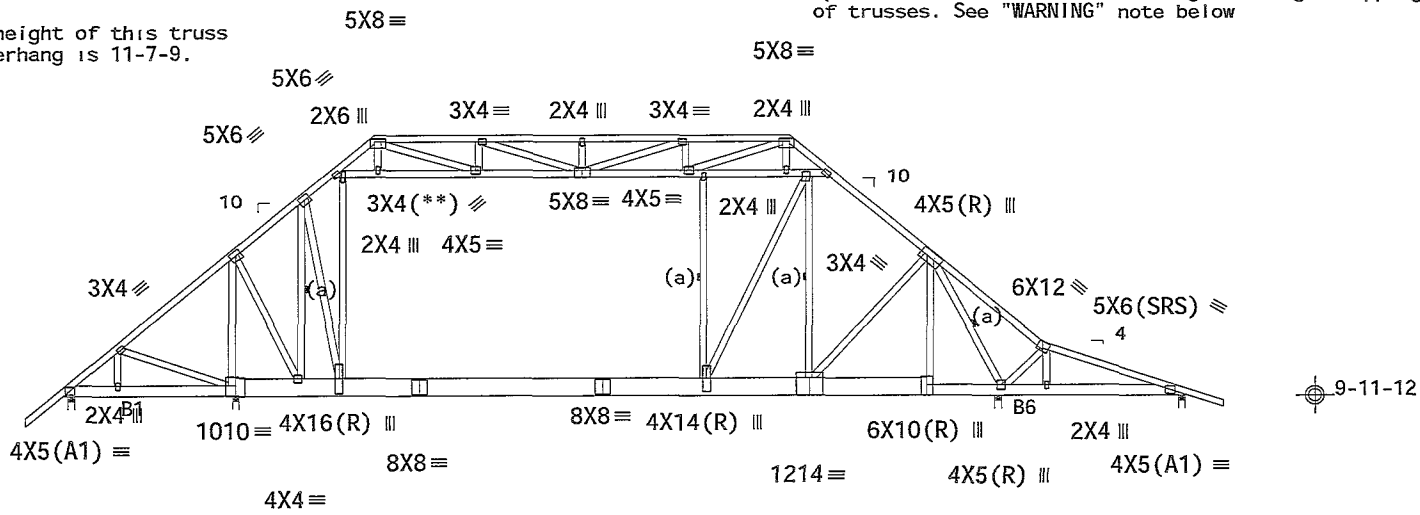

R=1886 U=21 W=3.5" (3.5" min.)
RL=266/-281 R=1587 U=95 W=3.5" (3.5" min)

R=3228 U=76 W=3.5" (3.5" min.)
R=185 U=26 W=3.5" (3.5" min.)

Design Crit: FBC2010Res/TPI-2007(STD)
FT/RT=20%(0%)/10(0)

PLT TYP. Wave

1263-03C02665-14 QTY:1 FL/-/5/-/-/R/- Scale =.125"/Ft.

ALPINE
ITW Building Components Group Inc.
Orlando FL, 32837
FL COA #0 278

WARNING READ AND FOLLOW ALL NOTES ON THIS SHEET!
IMPORTANT FURNISH THIS DESIGN TO ALL CONTRACTORS INCLUDING INSTALLERS

Trusses require extreme care in fabricating handl ng shipping installing and bracing Refer to and follow the latest ed tion of BCSI (Building Component Safety Informat on by TPI and WTCA) for safety practices prior to performing these functions Installers shall provide temporary brac ng per BCSI Unless noted otherwise top chord shall have properly attached structural sheathing and bottom chord shall have a properly attached rigid ceiling Locations shown for permanent lateral restraint of webs shall have bracing installed per BCSI sections B3 B7 or B10 as appl cable

ITW Building Components Group Inc (ITWBCG) shall not be responsible for any deviation from this design, any failure to build the truss in conformance w th ANSI/TPI 1 or for handling shipping installation bracing of trusses Apply plates to each face of truss and pos t on as shown above and on the drawing Details unless noted otherwise Refer to drawings 160A-Z for standard plate positions A seal on this drawing or cover page listing this drawing indicates acceptance of professional eng neering responsibility solely for the design shown The suitability and use of th s des gn for any structure is the responsibility of the Building Des gner per ANSI/TPI 1 Sec 2 For more information see This job general notes page ITW-BCG www itwbcg com TPI www tpinst org WTCA www sbcindustry com ICC www iccsafe org

WILLIAM H. KRICK LICENSE No. 70861 STATE OF FLORIDA PROFESSIONAL ENGINEER

08/28/2013

TC LL	20.0 PSF	REF	R215-- 62532
TC DL	10.0 PSF	DATE	08/28/13
BC DL	10.0 PSF	DRW	HCUSR215 13240028
BC LL	0.0 PSF	HC-ENG	KD/AP
TOT.LD.	40.0 PSF	SEQN-	381388
DUR.FAC.	1.25	FROM	CDM
SPACING	24.0"	JREF-	1UZ6215_Z01

(8320-/SMITH RES.--LAKE CITY /S&S CONSTRUCTION -- LAKE CITY, FL - D9)

Top chord 2x4 SP 2400f-2 0E
Bot chord 2x10 SP 2400f-2.0E B1, B6 2x6 SP 2400f-2 0E
Webs 2x4 SP 2400f-2 0E

Design Dead Loads based on material weight adjusted for slope TC 1.00 PSF

Left cantilever is exposed to wind

In lieu of structural panels use purlins to brace TC @ 24" OC.

Bottom chord checked for 10 00 psf non-concurrent live load.

Trusses to be spaced at 37.0" OC maximum

Collar-tie braced with continuous lateral bracing at 24" OC.

Deflection meets L/360 live and L/240 total load Creep increase factor for dead load is 1.50

SPECIAL LOADS
------(LUMBER DUR.FAC =1.25 / PLATE DUR FAC =1.25)

TC - From	101 PLF	at -1 67 to	101 PLF	at 0.00
TC - From	93 PLF	at 0 00 to	93 PLF	at 12.25
TC - From	287 PLF	at 12.25 to	287 PLF	at 13.48
TC - From	279 PLF	at 13.48 to	279 PLF	at 27.67
TC - From	125 PLF	at 27 67 to	125 PLF	at 31 56
TC - From	93 PLF	at 31 56 to	93 PLF	at 48 83
TC - From	99 PLF	at 48.83 to	99 PLF	at 50 50
BC - From	31 PLF	at 0.00 to	31 PLF	at 29 88
BC - From	93 PLF	at 29.88 to	93 PLF	at 32.21
BC - From	31 PLF	at 32 21 to	31 PLF	at 48.83
BC -	502 LB Conc	Load at 12.08		
BC -	278 LB Conc	Load at 12 25		
BC -	277 LB Conc	Load at 27.67		

The overall height of this truss excluding overhang is 11-7-9

WARNING Furnish a copy of this DWG to the installation contractor. Special care must be taken during handling, shipping and installation of trusses See WARNING" note below

2 COMPLETE TRUSSES REQUIRED

Nail Schedule 0 131"x3", min nails
Top Chord 1 Row @11 00 o c
Bot Chord 1 Row @12 00" o c.
Webs 1 Row @ 4" o c
Use equal spacing between rows and stagger nails in each row to avoid splitting

Negative reaction(s) of -185# MAX (See below) from a non-wind load case requires uplift connection

(**) 1 plate(s) require special positioning Refer to scaled plate plot details for special positioning requirements

130 mph wind, 15 30 ft mean hgt, ASCE 7-10, CLOSED bldg, Located anywhere in roof RISK CAT II, EXP B, wind TC DL=5 0 psf, wind BC DL=5 0 psf GCpi(+/-)=0 18

Wind loads and reactions based on MWFRS

MWFRS loads based on trusses located at least 30 60 ft from roof edge

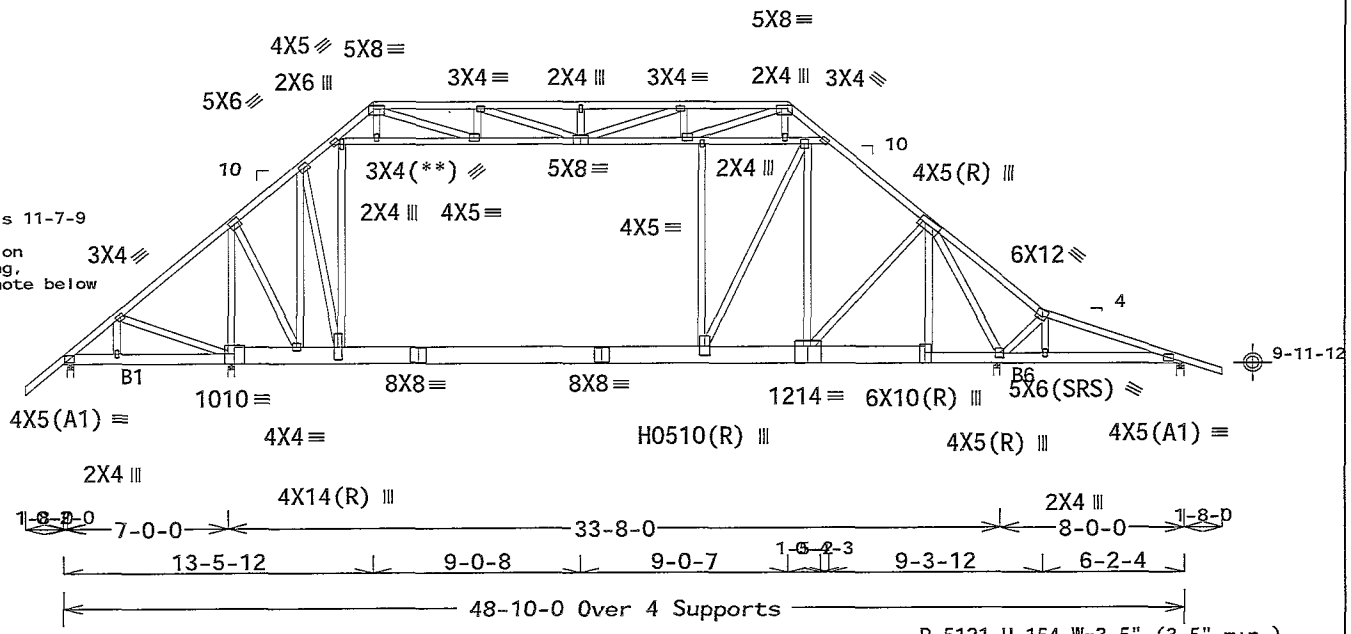

Design Crit: FBC2010Res/TPI-2007(STD)

PLT TYP. 20 Gauge HS,Wave FT/RT=20%(0%)/10(0) ID:63-03-3328-14 QTY:2 FL/-/5/-/-/R/- Scale =.125"/Ft.

ALPINE
ITW Building Components Group Inc.
Orlando FL, 32837
FL COA #0 278

WARNING READ AND FOLLOW ALL NOTES ON THIS SHEET!
IMPORTANT FURNISH THIS DESIGN TO ALL CONTRACTORS INCLUDING INSTALLERS

Trusses requ re extreme care in fabricating handl ng shipp ng installing and bracing Refer to and follow the latest ed tion of BCSI (Building Component Safety Information by TPI and WTCA) for safety pract ces prior to performing these functions Installers shall prov de temporary bracing per BCSI Unless noted otherwise top chord shall have properly attached structural sheath ng and bottom chord shall have a properly attached rigid ce ling Locations shown for permanent lateral restraint of webs shall have brac ng nstalled per BCSI sections B3 B7 or B10 as appl cable

ITW Build ng Components Group Inc (ITWBCG) shall not be responsible for any deviation from this design, any failure to build the truss in conformance with ANSI/TPI 1 or for handling shipping installation & bracing of trusses Apply plates to each face of truss and position as shown above and on the individual Details unless noted otherw se Refer to drawings 160A-Z for standard plate pos tions A seal on this drawing or cover page list ng this drawing indicates acceptance of professional engineering responsibility solely for the design shown The suitability and use of this design for any structure is the respons b l ty of the Bu ld ng Designer per ANSI/TPI 1 Sec 2 For more informat on see This design general notes page ITW-BCG www twbcg com, TPI www tp nst org WTCA www sbc ndustry com ICC www iccsafe org

WILLIAM H. KRICK LICENSED No. 70861 STATE OF FLORIDA PROFESSIONAL ENGINEER
08/28/2013

TC LL	20.0 PSF	REF R215-- 62533
TC DL	10.0 PSF	DATE 08/28/13
BC DL	10.0 PSF	DRW HCUSR215 13240035
BC LL	0.0 PSF	HC-ENG KD/AP
TOT.LD.	40.0 PSF	SEQN- 381382
DUR.FAC.	1.25	FROM CDM
SPACING	37.0"	JREF- 1UZ6215_Z01

(8320-/SMITH RES.--LAKE CITY /S&S CONSTRUCTION -- LAKE CITY, FL - D10)

Top chord 2x4 SP 2400f-2.0E
Bot chord 2x10 SP 2400f-2.0E ·B1, B6 2x6 SP 2400f-2.0E
Webs 2x4 SP 2400f-2.0E

130 mph wind, 15.30 ft mean hgt, ASCE 7-10, CLOSED bldg, Located anywhere in roof, RISK CAT II, EXP B, wind TC DL=5 0 psf, wind BC DL=5.0 psf. GCpi(+/-)=0.18

Left cantilever is exposed to wind

In lieu of structural panels use purlins to brace all flat TC @ 24" OC.

Collar-tie braced with continuous lateral bracing at 24" OC. or rigid ceiling.

Deflection meets L/360 live and L/240 total load. Creep increase factor for dead load is 1.50.

The overall height of this truss excluding overhang is 11-7-9.

Design Dead Loads based on material weight adjusted for slope TC 1.00 PSF

(**) 1 plate(s) require special positioning. Refer to scaled plate plot details for special positioning requirements.

Wind loads and reactions based on MWFRS with additional C&C member design.

(a) Continuous lateral bracing equally spaced on member.

Bottom chord checked for 10.00 psf non-concurrent live load.

BC attic room floor loading LL = 40.00 psf, DL = 10.00 psf; from 12-3-0 to 27-8-0.

WARNING. Furnish a copy of this DWG to the installation contractor. Special care must be taken during handling, shipping and installation of trusses. See "WARNING" note below.

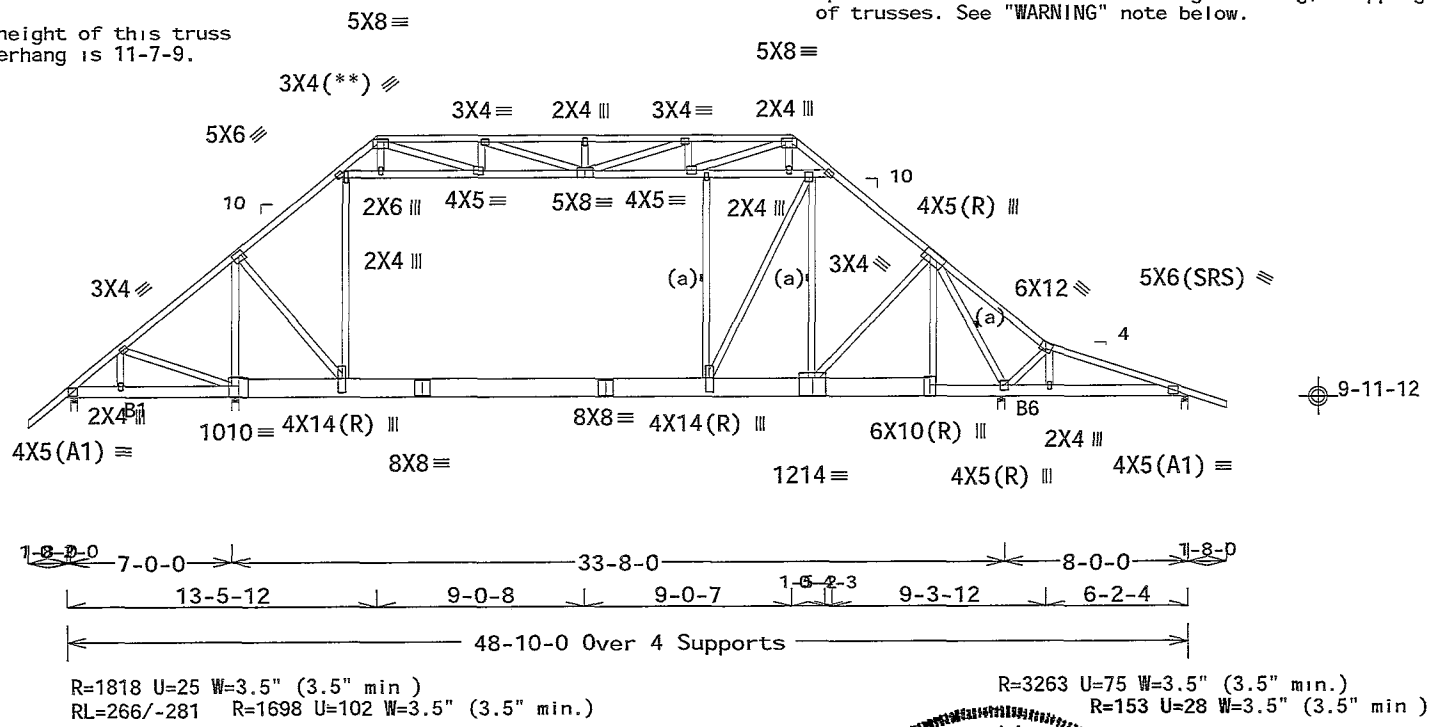

R=1818 U=25 W=3.5" (3.5" min)
RL=266/-281 R=1698 U=102 W=3.5" (3.5" min.)

R=3263 U=75 W=3.5" (3.5" min.)
R=153 U=28 W=3.5" (3.5" min)

Design Crit: FBC2010Res/TPI-2007(STD)
FT/RT=20%(0%)/10(0)

PLT TYP. Wave

QTY:1 FL/-/5/-/-/R/- Scale =.125"/Ft.

ALPINE
ITW Building Components Group Inc.
Orlando FL, 32837
FL COA #0 278

WARNING READ AND FOLLOW ALL NOTES ON THIS SHEET!
IMPORTANT FURNISH THIS DESIGN TO ALL CONTRACTORS INCLUDING INSTALLERS

Trusses require extreme care in fabricating handl ng shipping installing and bracing Refer to and follow the latest edit on of BCSI (Building Component Safety Informat on by TPI and WTCA) for safety practices prior to performing these functions Installers shall provide temporary bracing per BCSI Unless noted otherwise top chord shall have properly attached structural sheathing and bottom chord shall have a properly attached rigid ceiling Locations shown for permanent lateral restraint of webs shall have bracing installed per BCSI sections B3 B7 or B10 as appl cable

ITW Building Components Group Inc (ITWBCG) shall not be responsible for any deviation from this design, any fa lure to build the truss in conformance w th ANSI/TPI 1 or for handling sh pping installation & brac ng of trusses Apply plates to each face of truss and posit on as shown above and on the individual Details unless noted otherwise Refer to drawings 160A-Z for standard plate positions A seal on this drawing or cover page listing this drawing indicates acceptance of profess onal engineering responsib lity solely for the design shown The suitability and use of th s design for any structure is the responsibility of the Building Des gner per ANSI/TPI 1 Sec 2 For more nformation see. This seal on general notes page ITW-BCG www itwbcg com TPI www tpinst org WTCA www sbcindustry com, ICC www iccsafe org

WILLIAM H. KRICK
LICENSE
No. 70861
STATE OF FLORIDA
PROFESSIONAL ENGINEER
08/28/2013

TC LL	20.0 PSF	REF	R215-- 62534
TC DL	10.0 PSF	DATE	08/28/13
BC DL	10.0 PSF	DRW	HCUSR215 13240029
BC LL	0.0 PSF	HC-ENG	KD/AP
TOT.LD.	40.0 PSF	SEQN-	381355
DUR.FAC.	1.25	FROM	CDM
SPACING	24.0"	JREF-	1UZ6215_Z01

(8320-/SMITH RES.--LAKE CITY /S&S CONSTRUCTION -- LAKE CITY, FL - D11)

Top chord 2x4 SP 2400f-2 OE
Bot chord 2x10 SP 2400f-2.0E B1, B6 2x6 SP 2400f-2 OE
B3, B7 2x4 SP 2400f-2.0E
Webs 2x4 SP 2400f-2 OE
Lt Wedge 2x6 SP 2400f-2 OE

Special loads
------(Lumber Dur Fac =1 25 / Plate Dur Fac =1 25)
TC- From 138 plf at -1 67 to 138 plf at 13 48
TC- From 138 plf at 13 48 to 138 plf at 27 47
TC- From 186 plf at 27 47 to 186 plf at 27.67
TC- From 138 plf at 27 67 to 138 plf at 31 10
TC- From 138 plf at 31 10 to 138 plf at 38.27
TC- From 138 plf at 38 27 to 138 plf at 42.50
TC- From 138 plf at 42 50 to 138 plf at 48 02
PLT- From 46 plf at 12.00 to 230 plf at 27 67 (CEILING)
BC- From 46 plf at 0 00 to 46 plf at 48 02
BC- From 92 plf at 48 02 to 92 plf at 48 83
BC- 852 00 lb Conc Load at 12 08
BC- 413.44 lb Conc Load at 12.25
BC- 405 78 lb Conc Load at 27 67
BC- 445 25 lb Conc Load at 33 71

Collar-tie braced with continuous lateral bracing at 24" OC

WARNING Furnish a copy of this DWG to the installation contractor
Special care must be taken during handling, shipping and installation
of trusses. See "WARNING" note below

2 COMPLETE TRUSSES REQUIRED

Nail Schedule 0 131"x3", min nails
Top Chord 1 Row @ 7 75 o.c.
Bot Chord 1 Row @12 00" o c.
Webs 1 Row @ 4" o c
Use equal spacing between rows and stagger nails
in each row to avoid splitting

(**) 2 plate(s) require special positioning. Refer to scaled plate
plot details for special positioning requirements

130 mph wind, 15.30 ft mean hgt, ASCE 7-10, CLOSED bldg, Located
anywhere in roof, RISK CAT II, EXP B, wind TC DL=5.0 psf, wind BC
DL=5 0 psf GCpi(+/-)=0 18

Wind loads and reactions based on MWFRS

Calculated horizontal deflection is 0 11" due to live load and 0 17"
due to dead load.

In lieu of structural panels use purlins to brace TC @ 24" OC

Trusses to be spaced at 55 1 OC maximum.

Deflection meets L/360 live and L/240 total load Creep increase
factor for dead load is 1 50

The overall height of this truss excluding overhang is 11-7-9.

Collar-tie braced with continuous lateral bracing at 24" O C
including chord ends, or rigid ceiling.

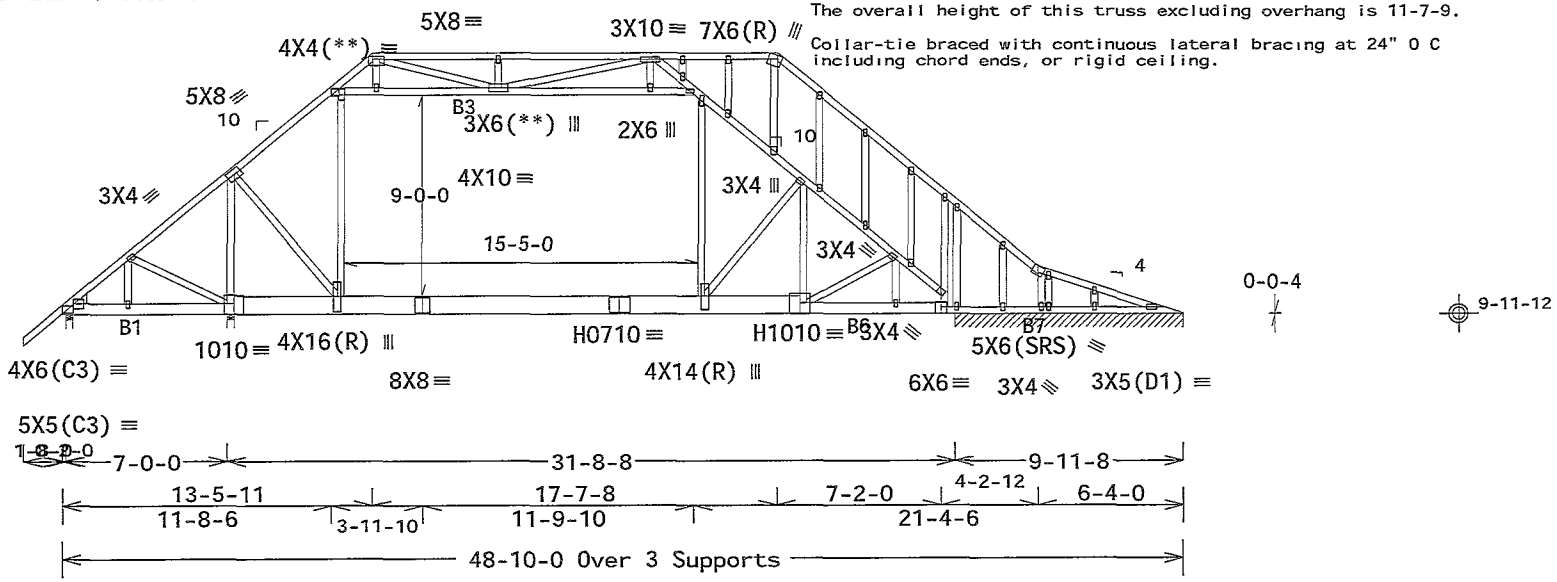

Note: All Plates Are 2X4 Except As Shown.

Design Crit: FBC2010Res/TPI-2007(STD)

PLT TYP. 20 Gauge HS,Wave FT/RT=20%(0%)/10(0) 13:03:03 02/25/14 MODEL:1 FL/-/5/-/-/R/- Scale =.125"/Ft.

ALPINE
ITW Building Components Group Inc.
Orlando FL, 32837
FL COA #0 278

WARNING READ AND FOLLOW ALL NOTES ON THIS SHEET!
IMPORTANT FURNISH THIS DESIGN TO ALL CONTRACTORS INCLUDING INSTALLERS

Trusses require extreme care in fabricating handling sh pping installing and bracing Refer to and follow the latest edition of BCSI (Build ng Component Safety Information by TPI and WTCA) for safety practices prior to performing these funct ons Installers shall prov de temporary brac ng per BCSI Unless noted otherwise top chord shall have properly attached structural sheathing and bottom chords shall have a properly attached rig d ceil ng Locations shown for permanent lateral restraint of webs shall have bracing installed per BCSI sections B3 B7 or B10 as appl cable

ITW Building Components Group Inc (ITWBCG) shall not be responsible for any deviat on from this design, any failure to bu ld the truss in conformance with ANSI/TPI 1 or for handling shipp ng installation & brac ng of trusses Apply plates to each face of truss and posit on as shown above and on the joint Details unless noted otherwise Refer to drawings 160A-Z for standard plate positions A seal on this drawing or cover page listing this drawing indicates acceptance of profess onal engineer ng responsib lity solely for the design shown The su tability and use of th s design for any structure is the responsibility of the Building Designer per ANSI/TPI 1 Sec 2 For more nformation see This general notes page ITW-BCG www itwbcg com TPI www tpinst org WTCA www sbcindustry com, ICC www iccsafe org

WILLIAM H. KRICK LICENSED No. 70861 STATE OF FLORIDA PROFESSIONAL ENGINEER 08/28/2013

TC LL	20.0 PSF	REF R215-- 62535
TC DL	10.0 PSF	DATE 08/28/13
BC DL	10.0 PSF	DRW HCUSR215 13240040
BC LL	0.0 PSF	HC-ENG KD/AP
TOT.LD.	40.0 PSF	SEQN- 381380
DUR.FAC.	1.25	FROM CDM
SPACING	55.1"	JREF- 1UZ6215_Z01

(8320-/SMITH RES.--LAKE CITY /S&S CONSTRUCTION -- LAKE CITY, FL - D12)

Top chord 2x4 SP 2400f-2.0E T4 2x8 SP 2400f-2.0E
.T5 2x4 SP M-31
Bot chord 2x10 SP 2400f-2.0E B1, B6 2x6 SP 2400f-2 0E
B3 2x4 SP 2400f-2 0E
Webs 2x4 SP 2400f-2 0E
Rt Wedge 2x6 SP 2400f-2 0E

Design Dead Loads based on material weight adjusted for slope TC
1.00 PSF

Special loads
------(Lumber Dur Fac.=1 25 / Plate Dur Fac =1 25)
TC- From 132 plf at 0 00 to 132 plf at 7 33
TC- From 132 plf at 7.33 to 132 plf at 13.48
TC- From 132 plf at 13 48 to 132 plf at 25 69
TC- From 132 plf at 25 69 to 132 plf at 26 98
TC- From 190 plf at 26 98 to 190 plf at 27 67
TC- From 132 plf at 27 67 to 132 plf at 32 12
TC- From 132 plf at 32 12 to 132 plf at 39 17
PLT- From 44 plf at 12.00 to 220 plf at 27 67 (CEILING)
BC- From 44 plf at 0 00 to 44 plf at 39 17
BC- 758.00 lb Conc Load at 12 08
BC- 396 57 lb Conc Load at 12 25
BC- 371.29 lb Conc Load at 27 67
BC- 400.00 lb Conc Load at 33.71

Trusses to be spaced at 52 9 OC maximum

The overall height of this truss
excluding overhang is 11-7-9.

2 COMPLETE TRUSSES REQUIRED

Nail Schedule 0 131"x3", min. nails
Top Chord 1 Row @ 6 50 o c
Bot Chord 1 Row @12 00 o c
Webs 1 Row @ 4" o.c
Use equal spacing between rows and stagger nails
in each row to avoid splitting

** The maximum horizontal reaction is 521# **

(I) - plates so marked were sized using a Fabrication Tolerance of 0%
and a Rotational Tolerance of 0 degrees.

(**) 1 plate(s) require special positioning. Refer to scaled plate
plot details for special positioning requirements.

130 mph wind, 15 99 ft mean hgt, ASCE 7-10, CLOSED bldg, Located
anywhere in roof, RISK CAT II, EXP B, wind TC DL=5 0 psf, wind BC
DL=5 0 psf GCpi(+/-)=0.18

Wind loads and reactions based on MWFRS

Calculated horizontal deflection is 0 10" due to live load and 0 19"
due to dead load.

In lieu of structural panels use purlins to brace TC @ 24" OC

Collar-tie braced with continuous lateral bracing at 24" OC.

Deflection meets L/360 live and L/240 total load Creep increase
factor for dead load is 1.50.

WARNING! THIS TRUSS IS NOT SYMMETRIC, BUT ITS EXTERIOR GEOMETRY
MAKES ERECTION ERROR MORE PROBABLE. IT IS IMPERATIVE THAT THIS TRUSS
BE INSTALLED PROPERLY TRUSS MANUFACTURER IS TO MARK THIS TRUSS FOR
PROPER ERECTION

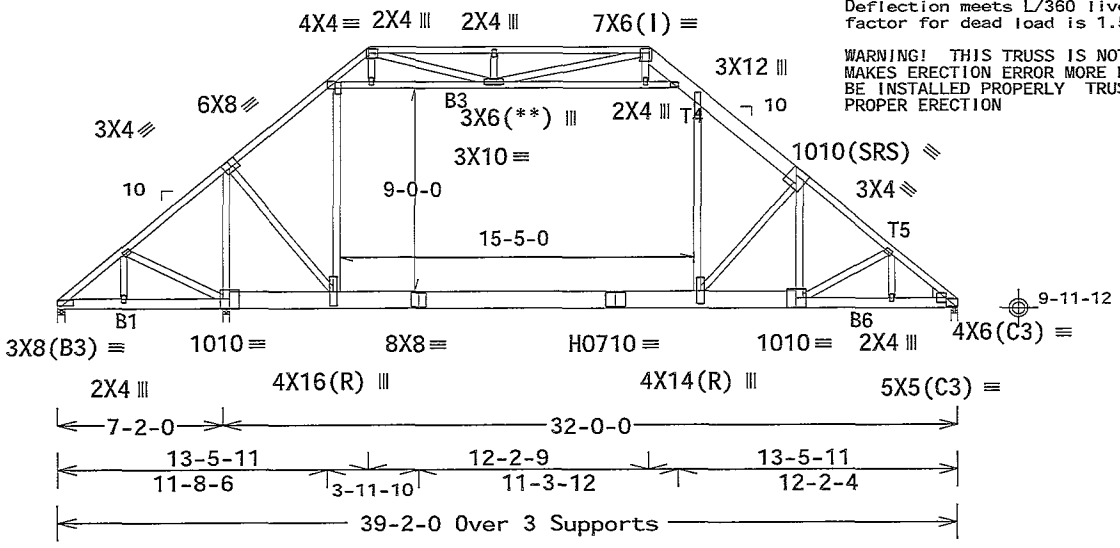

R=4604 U=183 W=3.5" (3.5" min.)
RL=521/-521 R=3304 U=614 W=3.5" (3.5" min.)

R=6048 U=91 W=3.5" (3.5" min.)

Design Crit: FBC2010Res/TPI-2007(STD)

PLT TYP. 20 Gauge HS,Wave FT/RT=20%(0%)/10(0) 12 03 03 09 23 14 QTY:1 FL/-/5/-/-/R/- Scale =.125"/Ft.

ALPINE
ITW Building Components Group Inc.
Orlando FL, 32837
FL COA #0 278

WARNING READ AND FOLLOW ALL NOTES ON THIS SHEET!
IMPORTANT FURNISH THIS DESIGN TO ALL CONTRACTORS INCLUDING INSTALLERS

Trusses require extreme care in fabr cat ng handling shipping installing and bracing Refer to and follow the latest ed t on of BCSI (Build ng Component Safety Information by TPI and WTCA) for safety pract ces prior to performing these funct ons Installers shall provide temporary bracing per BCSI Unless noted otherwise top chord shall have properly attached structural sheathing and bottom chord shall have a properly attached rigid ceil ng Locations shown for permanent lateral restraint of webs shall have bracing installed per BCSI sect ons B3 B7 or B10 as applicable

ITW Building Components Group Inc (ITWBCG) shall not be responsible for any dev at on from this design, any failure to build the truss in conformance with ANSI/TPI 1 or for handling shipp ng installation & bracing of trusses Apply plates to each face of truss and pos t on as shown above and on the plate Details unless noted otherwise Refer to draw ngs 160A-Z for standard plate positions A seal on this drawing or cover page listing this drawing ind cates acceptance of professional engineering responsibility solely for the design shown The su tability and use of th s design for any structure is the responsibility of the Build ng Designer per ANSI/TPI 1 Sec 2 For more information see TPI job general notes page ITW-BCG www itwbcg com TPI www tpinst.org WTCA www sbcindustry com ICC www iccsafe.org

WILLIAM H. KRICK LICENSE No. 70861 STATE OF FLORIDA PROFESSIONAL ENGINEER
08/28/2013

TC LL	20.0 PSF	REF	R215-- 62536
TC DL	10.0 PSF	DATE	08/28/13
BC DL	10.0 PSF	DRW	HCUSR215 13240037
BC LL	0.0 PSF	HC-ENG	KD/AP
TOT.LD.	40.0 PSF	SEQN-	381378
DUR.FAC.	1.25	FROM	CDM
SPACING	52.9"	JREF-	1UZ6215_Z01

(8320-/SMITH RES.--LAKE CITY /S&S CONSTRUCTION -- LAKE CITY, FL - J1)

Top chord 2x4 SP 2400f-2.0E
Bot chord 2x4 SP 2400f-2.0E
Webs 2x4 SP 2400f-2.0E

Left end vertical not exposed to wind pressure.

Bottom chord checked for 10.00 psf non-concurrent live load.

Deflection meets L/240 live and L/180 total load. Creep increase factor for dead load is 1.50.

Design Dead Loads based on material weight adjusted for slope TC: 1.00 PSF

130 mph wind, 15.00 ft mean hgt, ASCE 7-10, CLOSED bldg, not located within 4.50 ft from roof edge, RISK CAT II, EXP B, wind TC DL=5.0 psf, wind BC DL=5.0 psf. GCpi(+/-)=0.18

Wind loads and reactions based on MWFRS with additional C&C member design.

The overall height of this truss excluding overhang is 4-1-12.

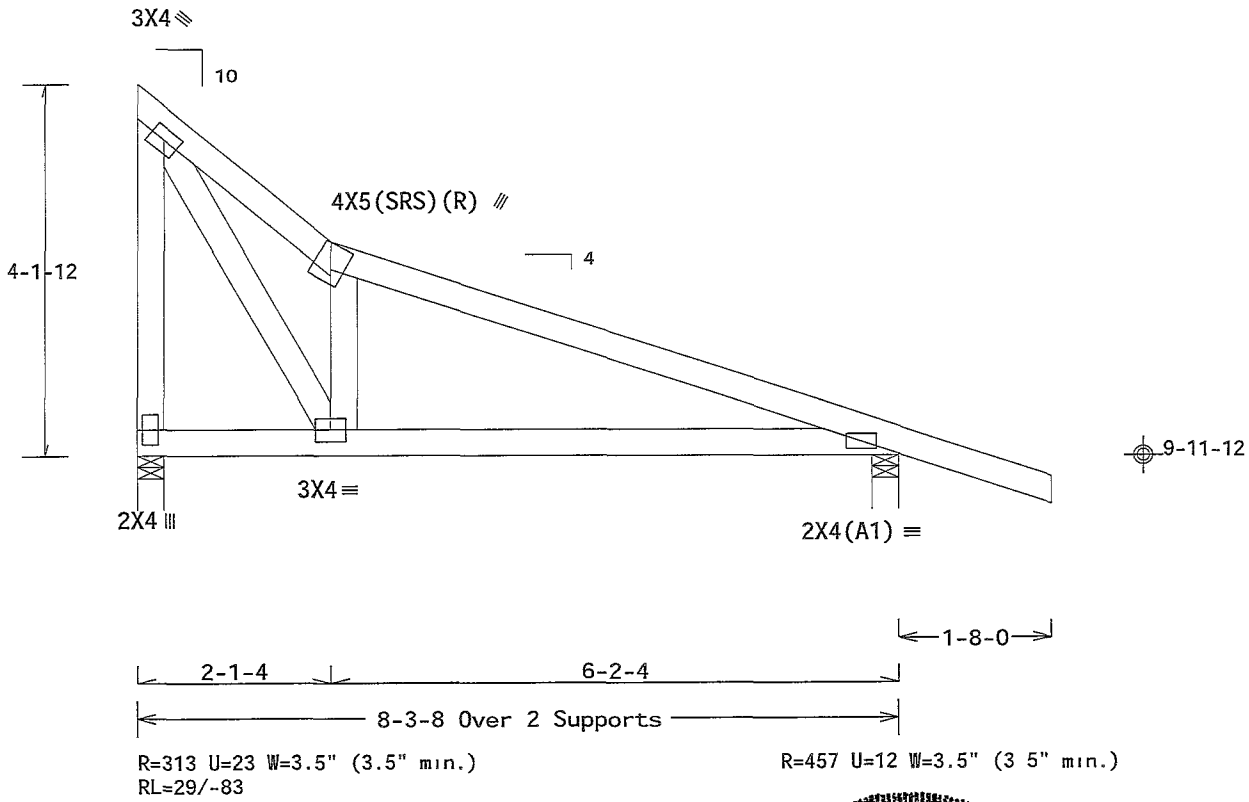

Design Crit. FBC2010Res/TPI-2007(STD)
FT/RT=20%(0%)/10(0)

PLT TYP. Wave | 12063-03-0223-14 | QTY:6 | FL/-/5/-/-/R/- | Scale =.5"/Ft.

ALPINE
ITW Building Components Group Inc.
Orlando FL, 32837
FL COA #0 278

WARNING READ AND FOLLOW ALL NOTES ON THIS SHEET!
IMPORTANT FURNISH THIS DESIGN TO ALL CONTRACTORS INCLUDING INSTALLERS

Trusses require extreme care in fabricating handling shipp ng installing and brac ng Refer to and follow the latest edition of BCSI (Building Component Safety Information by TPI and WTCA) for safety practices prior to perform ng these functions Installers shall prov de temporary bracing per BCSI Unless noted otherwise top chord shall have properly attached structural sheathing and bottom chord shall have a properly attached rigid ceiling Locations shown for permanent lateral restraint of webs shall have bracing installed per BCSI sections B3 B7 or B10 as applicable

ITW Building Components Group Inc (ITWBCG) shall not be responsible for any deviation from this design, any failure to build the truss n conformance with ANSI/TPI 1 or for handl ng shipping installation & bracing of trusses Apply plates to each face of truss and pos t on as shown above and on the truss Details unless noted otherwise Refer to drawings 160A-Z for standard plate posit ons A seal on this drawing or cover page listing this drawing indicates acceptance of professional eng neering responsibility solely for the design shown The suitability and use of this des gn for any structure is the responsib l ity of the Building Des gner per ANSI/TPI 1 Sec 2 For more informat on see. This design general notes page ITW-BCG www twbcg com TPI www tpinst org WTCA www sbcindustry com, ICC www iccsafe org

WILLIAM H. KRICK LICENSE No. 70861 STATE OF FLORIDA PROFESSIONAL ENGINEER
08/28/2013

TC LL	20.0 PSF	REF	R215-- 62537
TC DL	10.0 PSF	DATE	08/28/13
BC DL	10.0 PSF	DRW	HCUSR215 13240030
BC LL	0.0 PSF	HC-ENG	KD/AP
TOT.LD.	40.0 PSF	SEQN-	381275
DUR.FAC.	1.25	FROM	CDM
SPACING	24.0"	JREF-	1UZ6215_Z01

(8320-/SMITH RES.--LAKE CITY /S&S CONSTRUCTION -- LAKE CITY, FL - J2)

Top chord 2x4 SP 2400f-2.0E
Bot chord 2x4 SP 2400f-2.0E
Webs 2x4 SP 2400f-2.0E

Left cantilever is exposed to wind

(a) Continuous lateral bracing equally spaced on member.

Truss passed check for 20 psf additional bottom chord live load in areas with 42"-high x 24"-wide clearance.

Deflection meets L/240 live and L/180 total load. Creep increase factor for dead load is 1.50.

130 mph wind, 15.00 ft mean hgt, ASCE 7-10, CLOSED bldg, not located within 9 00 ft from roof edge, RISK CAT II, EXP B, wind TC DL=5.0 psf, wind BC DL=5.0 psf. GCpi(+/-)=0.18

Wind loads and reactions based on MWFRS with additional C&C member design.

Right end vertical not exposed to wind pressure.

Bottom chord checked for 10.00 psf non-concurrent live load.

The overall height of this truss excluding overhang is 10-4-6.

MWFRS loads based on trusses located at least 30.00 ft. from roof edge.

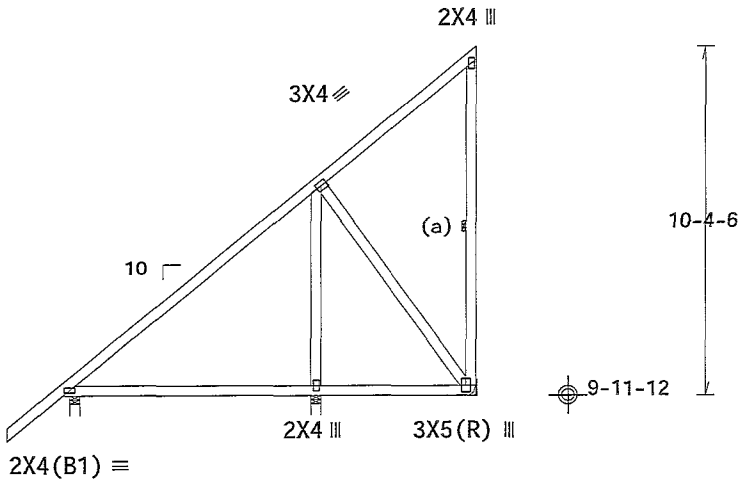

1-8-0 7-0-0 4-9-8

11-11-8 Over 3 Supports

R=550 U=0 W=3.5" (3.5" min) H=H1
RL=146/-109

R=349 U=57
R=277 U=0 W=3.5" (3.5" min.)

Design Crit: FBC2010Res/TPI-2007(STD)
FT/RT=20%(0%)/10(0)

PLT TYP. Wave

12 03 06 R225 14 QTY:2 FL/-/5/-/-/R/- Scale =.1875"/Ft.

ALPINE
ITW Building Components Group Inc.
Orlando FL, 32837
FL COA #0 278

WARNING READ AND FOLLOW ALL NOTES ON THIS SHEET!
IMPORTANT FURNISH THIS DESIGN TO ALL CONTRACTORS INCLUDING INSTALLERS

Trusses require extreme care in fabricating hand ng sh pp ng nstall ng and bracing Refer to and follow the latest edition of BCSI (Building Component Safety Informat on by TPI and WTCA) for safety practices prior to performing these funct ons Installers shall prov de temporary bracing per BCSI s Unless noted otherw se top chord shall have properly attached structural sheathing and bottom chord shall have a properly attached rigid ceiling Locations shown for permanent lateral restraint of webs shall have bracing installed per BCSI sections B3 B7 or B10 as applicable

ITW Bu lding Components Group Inc (ITWBCG) shall not be responsible for any deviation from this design, any fa lure to build the truss in conformance with ANSI/TPI 1 or for hand ng shipp ng installation & bracing of trusses Apply plates to each face of truss and position as shown above and on the jobs Details unless noted otherw se Refer to draw ngs 160A-Z for standard plate positions A seal on this drawing or cover page list ng th s drawing indicates acceptance of professional engineering responsibility solely for the design shown The suitab lity and use of this design for any structure is the responsib l ty of the Building Designer per ANSI/TPI 1 Sec 2 For more nformation see This job general notes page ITW-BCG www itwbcg com TPI www tpinst org WTCA www sbcindustry com, ICC www ccsafe org

WILLIAM H. KRICK LICENSE No. 70861 STATE OF FLORIDA PROFESSIONAL ENGINEER 08/28/2013

TC LL	20.0 PSF	REF	R215-- 62538
TC DL	10.0 PSF	DATE	08/28/13
BC DL	10.0 PSF	DRW	HCUSR215 13240008
BC LL	0.0 PSF	HC-ENG	KD/AP
TOT.LD.	40.0 PSF	SEQN-	381292
DUR.FAC.	1.25	FROM	CDM
SPACING	24.0"	JREF-	1UZ6215_Z01

(8320-/SMITH RES.--LAKE CITY /S&S CONSTRUCTION -- LAKE CITY, FL - J3)

Top chord 2x4 SP 2400f-2.0E
Bot chord 2x4 SP 2400f-2.0E
Webs 2x4 SP 2400f-2.0E

Left cantilever is exposed to wind

(a) Continuous lateral bracing equally spaced on member.

Bottom chord checked for 10.00 psf non-concurrent live load

The overall height of this truss excluding overhang is 10-4-6.

MWFRS loads based on trusses located at least 15.00 ft. from roof edge.

130 mph wind, 15.00 ft mean hgt, ASCE 7-10, CLOSED bldg, not located within 9.00 ft from roof edge, RISK CAT II, EXP B, wind TC DL=5.0 psf, wind BC DL=5.0 psf. GCpi(+/-)=0 18

Wind loads and reactions based on MWFRS with additional C&C member design.

Right end vertical not exposed to wind pressure.

Deflection meets L/240 live and L/180 total load. Creep increase factor for dead load is 1.50

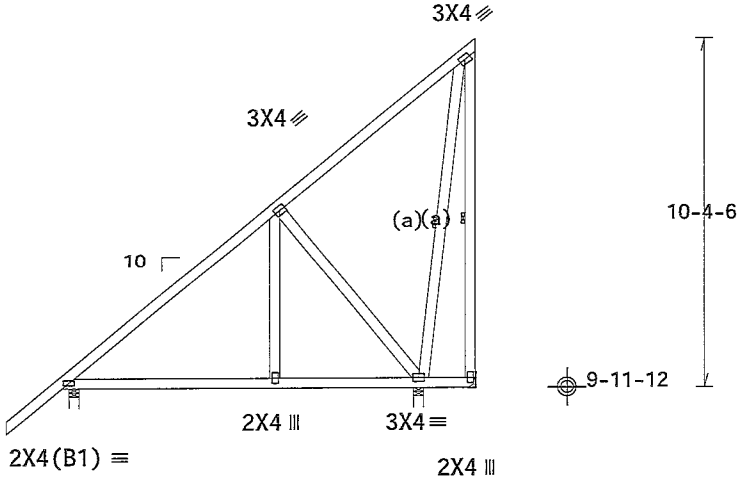

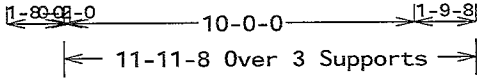

R=537 U=0 W=3.5" (3.5" min) R=55 U=24
RL=146/-109 H=H R=473 U=0 W=3.5" (3.5" min.)

Design Crit. FBC2010Res/TPI-2007(STD)
FT/RT=20%(0%)/10(0)

PLT TYP. Wave 1-03-06 B225.14 QTY:2 FL/-/5/-/-/R/- Scale =.1875"/Ft.

ALPINE
ITW Building Components Group Inc.
Orlando FL, 32837
FL COA #0 278

WARNING READ AND FOLLOW ALL NOTES ON THIS SHEET!
IMPORTANT FURNISH THIS DESIGN TO ALL CONTRACTORS INCLUDING INSTALLERS

Trusses require extreme care in fabricating handling shipping installing and bracing Refer to and follow the latest edition of BCSI (Building Component Safety Informat on by TPI and WTCA) for safety pract ces prior to performing these functions Installers shall prov de temporary bracing per BCSI Unless noted otherw se top chord shall have properly attached structural sheathing and bottom chord shall have a properly attached rigid ceil ng Locat ons shown for permanent lateral restraint of webs shall have bracing installed per BCSI sect ons B3 B7 or B10 as applicable

ITW Building Components Group Inc (ITWBCG) shall not be respons ble for any deviation from this design, any failure to build the truss in conformance with ANSI/TPI 1 or for handl ng shipping installation & bracing of trusses Apply plates to each face of truss and pos t on as shown above and on the Joint Details unless noted otherwise Refer to drawings 160A-Z for standard plate positions A seal on this drawing or cover page listing this draw ng indicates acceptance of professional eng neering responsibility solely for the design shown The suitabil ty and use of this des gn for any structure is the responsibility of the Building Designer per ANSI/TPI 1 Sec 2 For more informat on see This job general notes page ITW-BCG www itwbcg com TPI www tpinst org WTCA www sbcindustry com, ICC www iccsafe org

WILLIAM H. KRICK LICENSE No. 70861 STATE OF FLORIDA PROFESSIONAL ENGINEER 08/28/2013

TC LL	20.0 PSF	REF	R215-- 62539
TC DL	10.0 PSF	DATE	08/28/13
BC DL	10.0 PSF	DRW	HCUSR215 13240009
BC LL	0.0 PSF	HC-ENG	KD/AP
TOT.LD.	40.0 PSF	SEQN-	381286
DUR.FAC.	1.25	FROM	CDM
SPACING	24.0"	JREF-	1UZ6215_Z01

(8320-/SMITH RES.--LAKE CITY /S&S CONSTRUCTION -- LAKE CITY, FL - J4)

Top chord 2x4 SP 2400f-2.0E
Bot chord 2x4 SP 2400f-2.0E
Webs 2x4 SP 2400f-2.0E

(a) Continuous lateral bracing equally spaced on member.

Truss passed check for 20 psf additional bottom chord live load in areas with 42"-high x 24"-wide clearance.

Bottom chord checked for 10.00 psf non-concurrent live load.

The overall height of this truss excluding overhang is 10-4-6.

130 mph wind, 15.00 ft mean hgt, ASCE 7-10, CLOSED bldg, not located within 9.00 ft from roof edge, RISK CAT II, EXP B, wind TC DL=5.0 psf, wind BC DL=5.0 psf. GCpi(+/-)=0.18

Wind loads and reactions based on MWFRS with additional C&C member design

Right end vertical not exposed to wind pressure.

Deflection meets L/240 live and L/180 total load. Creep increase factor for dead load is 1 50

MWFRS loads based on trusses located at least 15.00 ft. from roof edge.

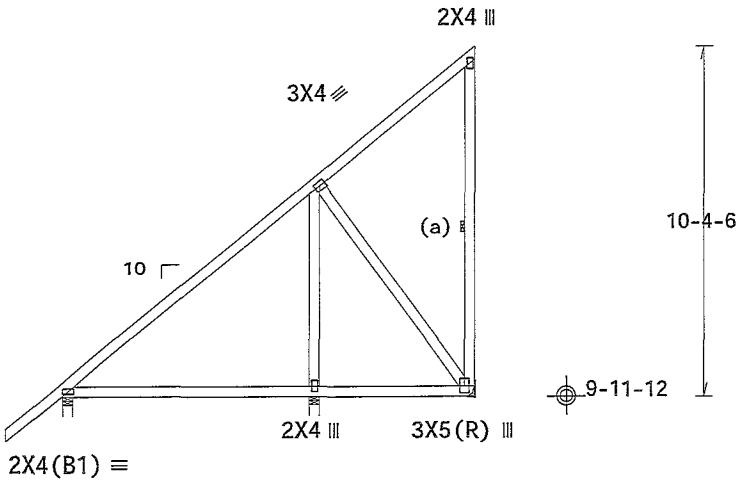

Design Crit: FBC2010Res/TPI-2007(STD)
FT/RT=20%(0%)/10(0)

PLT TYP. Wave

1263 03C02614 00 Y:3 FL/-/5/-/-/R/- Scale =.1875"/Ft.

ALPINE
ITW Building Components Group Inc.
Orlando FL, 32837
FL COA #0 278

WARNING READ AND FOLLOW ALL NOTES ON THIS SHEET!
IMPORTANT FURNISH THIS DESIGN TO ALL CONTRACTORS INCLUDING INSTALLERS

Trusses require extreme care in fabricating handling sh pping installing and bracing Refer to and follow the latest edition of BCSI (Building Component Safety Informat on by TPI and WTCA) for safety practices prior to performing these functions Installers shall prov de temporary bracing per BCSI Unless noted otherwise top chord shall have properly attached structural sheathing and bottom chord shall have a properly attached rigid ce ling Locations shown for permanent lateral restraint of webs shall have bracing nstalled per BCSI sections B3 B7 or B10 as applicable

ITW Building Components Group Inc (ITWBCG) shall not be responsible for any deviation from this design, any failure to build the truss in conformance with ANSI/TPI 1 or for handling shipp ng installation bracing of trusses Apply plates to each face of truss and pos tion as shown above and on the individual Details unless noted otherwise Refer to drawings 160A-Z for standard plate pos tions. A seal on this drawing or cover page list ng this draw ng ind cates acceptance of professional engineering responsibility solely for the design shown The suitability and use of this design for any structure is the respons b lity of the Build ng Designer per ANSI/TPI 1 Sec 2 For more nformation see This job general notes page ITW-BCG www twbcg com TPI www tpinst org WTCA www sbc ndustry com ICC www iccsafe org

WILLIAM H. KRIGER LICENSE No. 70861 STATE OF FLORIDA PROFESSIONAL ENGINEER

08/28/2013

TC LL	20.0 PSF	REF R215-- 62540
TC DL	10.0 PSF	DATE 08/28/13
BC DL	10.0 PSF	DRW HCUSR215 13240010
BC LL	0.0 PSF	HC-ENG KD/AP
TOT.LD.	40.0 PSF	SEQN- 381132
DUR.FAC.	1.25	FROM CDM
SPACING	24.0"	JREF- 1UZ6215_Z01

(8320-/SMITH RES.--LAKE CITY /S&S CONSTRUCTION -- LAKE CITY, FL - J5G)

Top chord 2x4 SP 2400f-2.0E
Bot chord 2x6 SP 2400f-2.0E
Webs 2x4 SP 2400f-2 0E

Special loads
------(Lumber Dur.Fac.=1.25 / Plate Dur Fac.=1.25)
TC- From 60 plf at 0.00 to 60 plf at 7.00
BC- From 20 plf at 0.00 to 20 plf at 7.00
BC- 350.00 lb Conc. Load at 1.81, 3.81, 5.81

Wind loads and reactions based on MWFRS with additional C&C member design.

2 COMPLETE TRUSSES REQUIRED

Nail Schedule:0.131"x3", min nails
Top Chord 1 Row @12.00" o.c.
Bot Chord 1 Row @10.00" o.c
Webs . 1 Row @ 4" o.c.
Use equal spacing between rows and stagger nails in each row to avoid splitting.

130 mph wind, 20.34 ft mean hgt, ASCE 7-10, CLOSED bldg, Located anywhere in roof, RISK CAT II, EXP B, wind TC DL=5.0 psf, wind BC DL=5.0 psf. GCpi(+/-)=0.18

End verticals not exposed to wind pressure.

Bottom chord checked for 10.00 psf non-concurrent live load.

Deflection meets L/360 live and L/240 total load. Creep increase factor for dead load is 1.50.

Truss must be installed as shown with top chord up.

The TC of this truss shall be braced with attached spans at 24" OC in lieu of structural sheathing.

The overall height of this truss excluding overhang is 10-4-6.

MWFRS loads based on trusses located at least 10.17 ft. from roof edge.

These hangers and support conditions used at bearings indicated.
(H1) = Simpson
(H2) = (J) Hanger not calculated

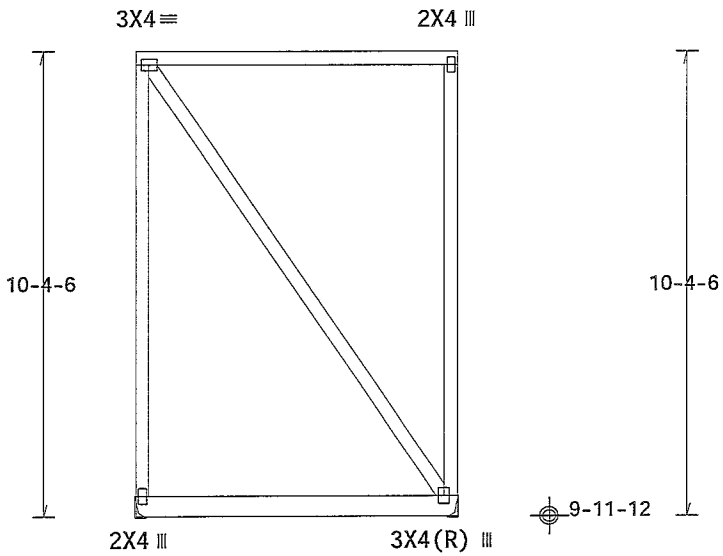

<7-0-0 Over 2 Supports>

R=758 U=57 R=852 U=68
H=H1 H=H2

Design Crit: FBC2010Res/TPI-2007(STD)
FT/RT=20%(0%)/10(0)

PLT TYP. Wave

12163-0302614 QTY:1 FL/-/5/-/-/R/- Scale =.25"/Ft.

ALPINE
ITW Building Components Group Inc.
Orlando FL, 32837
FL COA #0 278

WARNING READ AND FOLLOW ALL NOTES ON THIS SHEET!
IMPORTANT FURNISH THIS DESIGN TO ALL CONTRACTORS INCLUDING INSTALLERS

Trusses requ re extreme care n fabricating handling shipping nstalling and bracing Refer to and follow the latest edition of BCSI (Build ng Component Safety Informat on by TPI and WTCA) for safety pract ces pr or to performing these funct ons Installers shall provide temporary brac ng per BCSI Unless noted otherwise top chord shall have properly attached structural sheathing and bottom chord shall have a properly attached rigid ceil ng Locations shown for permanent lateral restraint of webs shall have brac ng nstalled per BCSI sect ons B3 B7 or B10 as applicable

ITW Build ng Components Group Inc (ITWBCG) shall not be respons ble for any deviat on from this design, any failure to build the truss in conformance with ANSI/TPI 1 or for handling sh pp ng installation bracing of trusses Apply plates to each face of truss and pos tion as shown above and on the drawing Details unless noted otherwise Refer to draw ngs 160A-Z for standard plate pos tions A seal on this drawing or cover page list ng this drawing indicates acceptance of professional engineering responsib lity solely for the design shown The suitability and use of this des gn for any structure is the responsibil ty of the Bu lding Designer per ANSI/TPI 1 Sec 2 For more information see This job general notes page ITW-BCG www twbcg com TPI www tpinst org WTCA www sbc ndustry com ICC www iccsafe org

WILLIAM H. KRICK LICENSE No. 70861 STATE OF FLORIDA PROFESSIONAL ENGINEER

08/28/2013

TC LL	20.0 PSF	REF	R215-- 62541
TC DL	10.0 PSF	DATE	08/28/13
BC DL	10.0 PSF	DRW	HCUSR215 13240011
BC LL	0.0 PSF	HC-ENG	KD/AP
TOT.LD.	40.0 PSF	SEQN-	381370
DUR.FAC.	1.25	FROM	CDM
SPACING	24.0"	JREF-	1UZ6215_Z01

(8320-/SMITH RES.--LAKE CITY /S&S CONSTRUCTION -- LAKE CITY, FL - J6G)

Top chord 2x4 SP 2400f-2.0E
Bot chord 2x6 SP 2400f-2.0E
Webs 2x4 SP 2400f-2.0E

Special loads
------(Lumber Dur.Fac.=1.25 / Plate Dur.Fac.=1 25)
TC- From 60 plf at 0 00 to 60 plf at 3.83
BC- From 20 plf at 0.00 to 20 plf at 3.83
BC- 348.54 lb Conc. Load at 1.81, 2.02

Wind loads and reactions based on MWFRS.

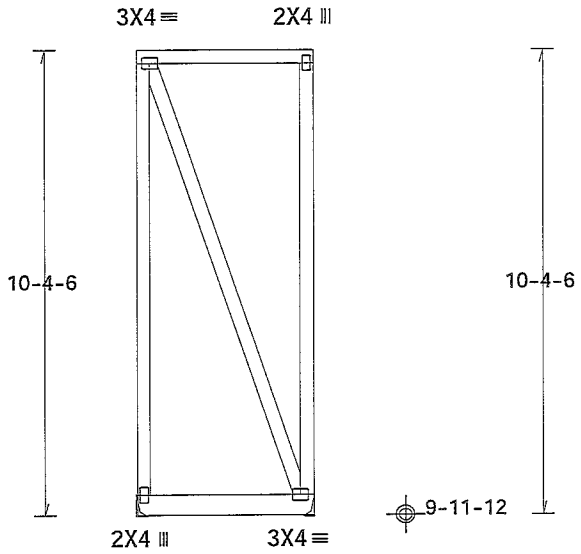

3-10-0 Over 2 Supports

R=502 U=75
H=H1 R=502 U=75
H=H2

2 COMPLETE TRUSSES REQUIRED

Nail Schedule:0.131"x3", min. nails
Top Chord. 1 Row @12.00" o.c.
Bot Chord 1 Row @ 8.25" o.c.
Webs . 1 Row @ 4" o.c.
Use equal spacing between rows and stagger nails in each row to avoid splitting.

130 mph wind, 20.34 ft mean hgt, ASCE 7-10, CLOSED bldg, Located anywhere in roof, RISK CAT II, EXP B, wind TC DL=5.0 psf, wind BC DL=5.0 psf. GCpi(+/-)=0.18

End verticals not exposed to wind pressure.

Deflection meets L/240 live and L/180 total load. Creep increase factor for dead load is 1.50.

Truss must be installed as shown with top chord up.

The TC of this truss shall be braced with attached spans at 24" OC in lieu of structural sheathing.

The overall height of this truss excluding overhang is 10-4-6.

These hangers and support conditions used at bearings indicated.
(H1) = Simpson
(H2) = (J) Hanger not calculated

Design Crit· FBC2010Res/TPI-2007(STD)
FT/RT=20%(0%)/10(0)

PLT TYP. Wave

QTY:1 FL/-/5/-/-/R/- Scale =.25"/Ft.

ALPINE
ITW Building Components Group Inc.
Orlando FL, 32837
FL COA #0 278

WARNING READ AND FOLLOW ALL NOTES ON THIS SHEET!
IMPORTANT FURNISH THIS DESIGN TO ALL CONTRACTORS INCLUDING INSTALLERS

Trusses require extreme care in fabricating handl ng shipping nstall ng and bracing follow the latest ed tion of BCSI (Building Component Safety Information by TPI and WTCA) fr fer to and safety practices pr or to performing these functions Installers shall prov de temporary bracing BCSI. Unless noted otherwise top chord shall have properly attached structural sheathing and bottom chord shall have a properly attached rigid ceiling Locations shown for permanent lateral restraint webs shall have bracing installed per BCSI sections B3 B7 or B10 as applicable

ITW Building Components Group Inc (ITWBCG) shall not be responsible for any deviat on from this design any failure to bu ld the truss in conformance with ANSI/TPI 1 or for handling shipping installation & brac ng of trusses Apply plates to each face of truss and posit on as shown above and on this drawing Details unless noted otherwise Refer to drawings 160A-Z for standard plate positions. A seal on this drawing or cover page listing this drawing indicates acceptance of profess onal engineering responsibility solely for the design shown The suitability and use of th s design for any structure is the responsibility of the Bu ilding Designer per ANSI/TPI 1 Sec 2 For more nformat on see This design general notes page ITW-BCG www itwbcg com TPI www tpinst org WTCA www sbcindustry com, ICC www iccsafe org

WILLIAM H. KRICK LICENSE No. 70861 STATE OF FLORIDA PROFESSIONAL ENGINEER
08/28/2013

TC LL	20.0 PSF	REF	R215-- 62542
TC DL	10.0 PSF	DATE	08/28/13
BC DL	10.0 PSF	DRW	HCUSR215 13240012
BC LL	0.0 PSF	HC-ENG	KD/AP
TOT.LD.	40.0 PSF	SEQN-	381295
DUR.FAC.	1.25	FROM	CDM
SPACING	24.0"	JREF-	1UZ6215_Z01

(8320-/SMITH RES.--LAKE CITY /S&S CONSTRUCTION -- LAKE CITY, FL - J7G)

Top chord 2x4 SP 2400f-2.0E
Bot chord 2x6 SP 2400f-2.0E
Webs 2x4 SP 2400f-2.0E

Special loads
------(Lumber Dur.Fac.=1.25 / Plate Dur.Fac.=1.25)
TC- From 60 plf at 0.00 to 60 plf at 3.83
BC- From 20 plf at 0.00 to 20 plf at 3.83
BC- 54.98 lb Conc. Load at 1.81, 2.02

Wind loads and reactions based on MWFRS.

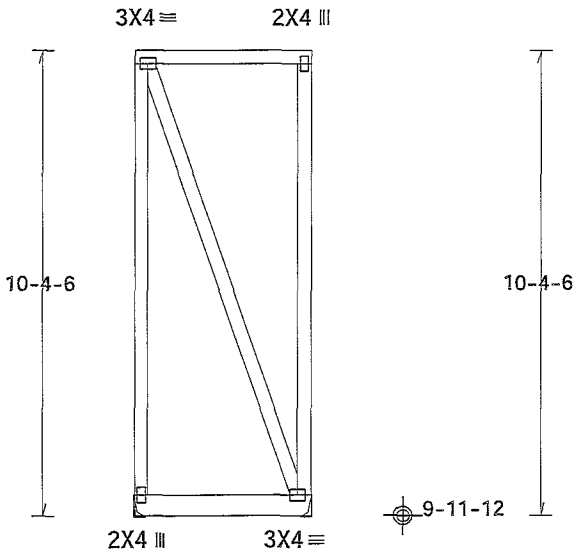

3-10-0 Over 2 Supports

R=208 U=42
H=H1 and H2

R=208 U=42
H=H1 and H2

2 COMPLETE TRUSSES REQUIRED

Nail Schedule.0.131"x3", min. nails
Top Chord 1 Row @12.00" o.c.
Bot Chord 1 Row @12.00" o.c.
Webs 1 Row @ 4" o.c.
Use equal spacing between rows and stagger nails in each row to avoid splitting.

130 mph wind, 20.34 ft mean hgt, ASCE 7-10, CLOSED bldg, Located anywhere in roof, RISK CAT II, EXP B, wind TC DL=5.0 psf, wind BC DL=5 0 psf. GCpi(+/-)=0.18

End verticals not exposed to wind pressure.

Deflection meets L/240 live and L/180 total load. Creep increase factor for dead load is 1.50.

Truss must be installed as shown with top chord up.

The TC of this truss shall be braced with attached spans at 24" OC in lieu of structural sheathing.

The overall height of this truss excluding overhang is 10-4-6

These hangers and support conditions used at bearings indicated.
(H1) = Simpson
(H2) = (J) Hanger not calculated
(H3) = (J) Hanger not calculated
(H4) = (J) Hanger not calculated

Design Crit FBC2010Res/TPI-2007(STD)
FT/RT=20%(0%)/10(0)

PLT TYP. Wave | QTY:2 | FL/-/5/-/-/R/- | Scale =.25"/Ft.

ALPINE
ITW Building Components Group Inc.
Orlando FL, 32837
FL COA #0 278

WARNING READ AND FOLLOW ALL NOTES ON THIS SHEET!
IMPORTANT FURNISH THIS DESIGN TO ALL CONTRACTORS INCLUDING INSTALLERS

Trusses require extreme care in fabricating handl ng shipping nstalling and bracing Refer to and follow the latest edition of BCSI (Building Component Safety Information by TPI and WTCA) for safety practices prior to performing these funct ons Installers shall prov de temporary brac ng per BCSI Unless noted otherwise top chord shall have properly attached structural sheathing and bottom chord shall have a properly attached r gid ceiling Locations shown for permanent lateral restraint of webs shall have brac ng installed per BCSI sections B3 B7 or B10 as appl cable

ITW Building Components Group Inc (ITWBCG) shall not be responsible for any deviat on from this design, any failure to build the truss in conformance with ANSI/TPI 1 or for handling shipping installation & bracing of trusses Apply plates to each face of truss and pos tion as shown above and on the individual Details unless noted otherwise Refer to drawings 160A-Z for standard plate positions A seal on this draw ng or cover page listing this drawing indicates acceptance of professional engineering responsibil ty solely for the design shown The suitability and use of this design for any structure is the respons bility of the Building Designer per ANSI/TPI 1 Sec 2 For more informat on see This job general notes page ITW-BCG www itwbcg com, TPI www tpinst org WTCA www sbcindustry com, ICC www iccsafe org

WILLIAM H. KRICK LICENSE No. 70861 STATE OF FLORIDA PROFESSIONAL ENGINEER
08/28/2013

TC LL	20.0 PSF	REF	R215-- 62543
TC DL	10.0 PSF	DATE	08/28/13
BC DL	10.0 PSF	DRW	HCUSR215 13240013
BC LL	0.0 PSF	HC-ENG	KD/AP
TOT.LD.	40.0 PSF	SEQN-	381289
DUR.FAC.	1.25	FROM	CDM
SPACING	24.0"	JREF-	1UZ6215_Z01

(8320-/SMITH RES.--LAKE CITY /S&S CONSTRUCTION -- LAKE CITY, FL - J8)

Top chord 2x4 SP 2400f-2.0E
Bot chord 2x4 SP 2400f-2.0E
Webs 2x4 SP 2400f-2 0E

Left end vertical not exposed to wind pressure.

Bottom chord checked for 10.00 psf non-concurrent live load.

The overall height of this truss excluding overhang is 4-10-2.

MWFRS loads based on trusses located at least 15.00 ft. from roof edge.

130 mph wind, 15.00 ft mean hgt, ASCE 7-10, CLOSED bldg, Located anywhere in roof, RISK CAT II, EXP B, wind TC DL=5.0 psf, wind BC DL=5.0 psf. GCpi(+/-)=0 18

Wind loads and reactions based on MWFRS with additional C&C member design

Deflection meets L/240 live and L/180 total load. Creep increase factor for dead load is 1.50.

These hangers and support conditions used at bearings indicated.
(H1) = Simpson
(H2) = (J) Hanger not calculated
(H3) = (J) Hanger not calculated
(H4) = (J) Hanger not calculated

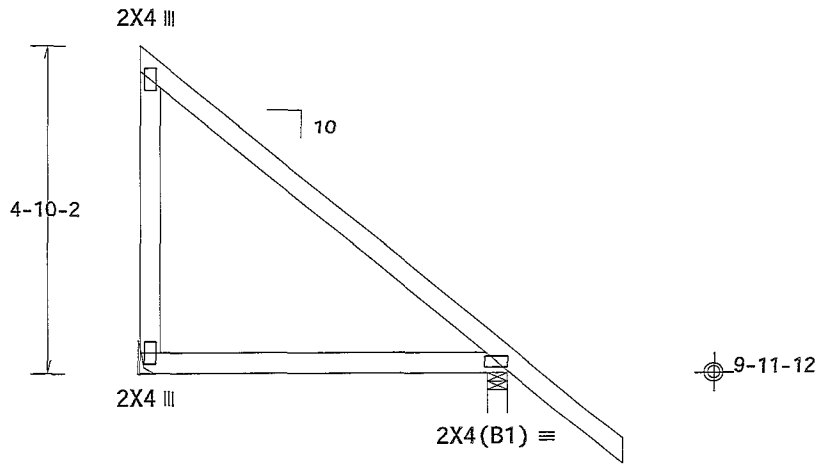

1-8-0

5-4-0 Over 2 Supports

R=187 U=10
RL=43/-74
H=H1 and H2

R=349 U=0 W=3.5"

Design Crit: FBC2010Res/TPI-2007(STD)
FT/RT=20%(0%)/10(0)

PLT TYP. Wave

12 03:06 R225.14 QTY:3 FL/-/5/-/-/R/- Scale =.375"/Ft.

ALPINE
ITW Building Components Group Inc.
Orlando FL, 32837
FL COA #0 278

WARNING READ AND FOLLOW ALL NOTES ON THIS SHEET!
IMPORTANT FURNISH THIS DESIGN TO ALL CONTRACTORS INCLUDING INSTALLERS

Trusses require extreme care in fabr cating handling shipping installing and bracing Refer to and follow the latest edition of BCSI (Bu ilding Component Safety Informat on by TPI and WTCA) safety practices prior to perform ng these functions Installers shall prov de temporary bracing per BCSI Unless noted otherwise top chord shall have properly attached structural sheathing and bottom chord shall have a properly attached rigid ceil ng Locations shown for permanent lateral restraint of webs shall have brac ng installed per BCSI sect ons B3 B7 or B10 as applicable

ITW Building Components Group Inc (ITWBCG) shall not be responsible for any dev at on from this design any failure to build the truss in conformance with ANSI/TPI 1 or for handling sh pping installation & bracing of trusses Apply plates to each face of truss and position as shown above and on the Joint Details unless noted otherwise Refer to drawings 160A-Z for standard plate positions A seal on this drawing or cover page l sting this drawing indicates acceptance of professional eng neering responsibility solely for the design shown The su tability and use of th s design for any structure is the responsibility of the Building Designer per ANSI/TPI 1 Sec 2 For more informat on see This job general notes page ITW-BCG www itwbcg com, TPI www tpinst org WTCA www sbcindustry com, ICC www iccsafe org

WILLIAM H. KRICK LICENSE No. 70861 STATE OF FLORIDA PROFESSIONAL ENGINEER
08/28/2013

TC LL	20.0 PSF	REF	R215-- 62544
TC DL	10.0 PSF	DATE	08/28/13
BC DL	10.0 PSF	DRW	HCUSR215 13240014
BC LL	0.0 PSF	HC-ENG	KD/AP
TOT.LD.	40.0 PSF	SEQN-	381140
DUR.FAC.	1.25	FROM	CDM
SPACING	24.0"	JREF-	1UZ6215_Z01

(8320-/SMITH RES.--LAKE CITY /S&S CONSTRUCTION -- LAKE CITY, FL - J9G)

Top chord 2x4 SP 2400f-2.0E
Bot chord 2x6 SP 2400f-2.0E
Webs 2x4 SP 2400f-2 0E

Special loads
------(Lumber Dur.Fac.=1.25 / Plate Dur.Fac.=1 25)
TC- From 30 plf at 0.00 to 30 plf at 7.00
BC- From 10 plf at 0.00 to 10 plf at 7.00
BC- 186.82 lb Conc. Load at 1.81, 3.81, 5 81

Wind loads and reactions based on MWFRS.

End verticals not exposed to wind pressure

2 COMPLETE TRUSSES REQUIRED

Nail Schedule:0.131"x3", min. nails
Top Chord 1 Row @12.00" o.c
Bot Chord 1 Row @12.00" o.c.
Webs . 1 Row @ 4" o.c.
Use equal spacing between rows and stagger nails in each row to avoid splitting.

130 mph wind, 15.00 ft mean hgt, ASCE 7-10, CLOSED bldg, Located anywhere in roof, RISK CAT II, EXP B, wind TC DL=5.0 psf, wind BC DL=5.0 psf. GCpi(+/-)=0 18

Deflection meets L/360 live and L/240 total load. Creep increase factor for dead load is 1.50.

2X4 ||| Truss must be installed as shown with top chord up.

The TC of this truss shall be braced with attached spans at 24" OC in lieu of structural sheathing.

The overall height of this truss excluding overhang is 4-10-2.

These hangers and support conditions used at bearings indicated. (H1) = Simpson
(H2) = (J) Hanger not calculated

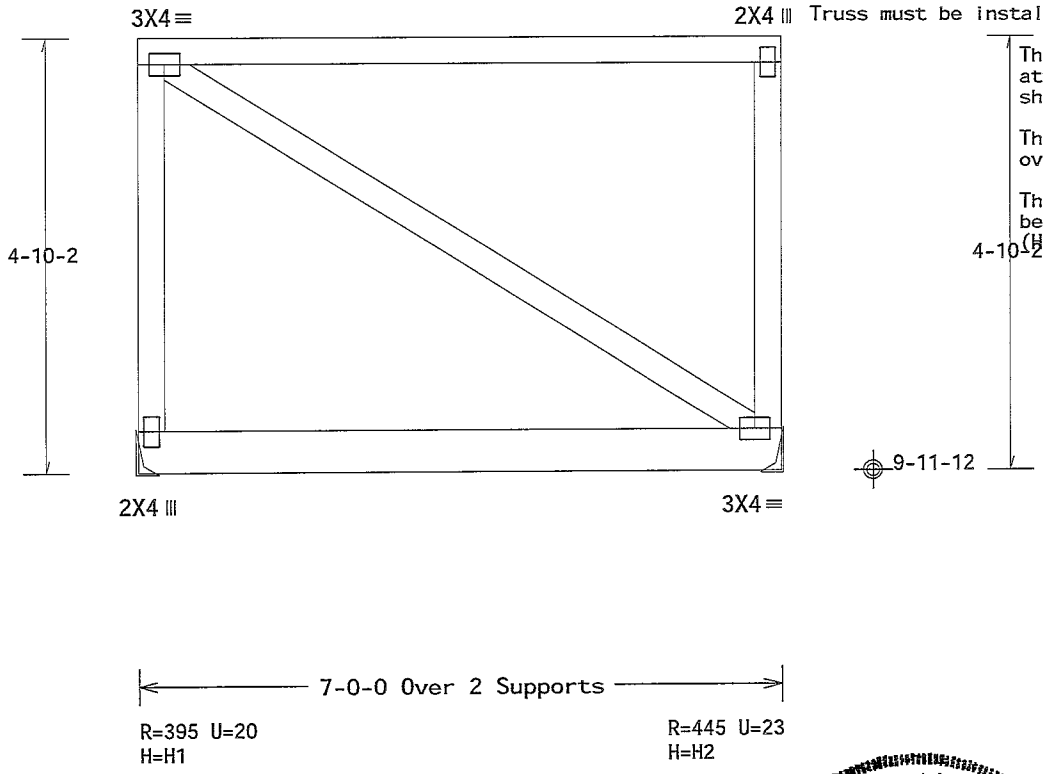

Design Crit FBC2010Res/TPI-2007(STD)
FT/RT=20%(0%)/10(0)

PLT TYP. Wave

18 53 03 10325 14 QTY:1

Scale =.5"/Ft.

ALPINE
ITW Building Components Group Inc.
Orlando FL, 32837
FL COA #0 278

WARNING READ AND FOLLOW ALL NOTES ON THIS SHEET!
IMPORTANT FURNISH THIS DESIGN TO ALL CONTRACTORS INCLUDING INSTALLERS

Trusses require extreme care in fabricating handling shipping installing and bracing Refer to and follow the latest edition of BCSI (Building Component Safety Informat on by TPI and WTCA) for safety practices prior to perform ng these functions Installers shall prov de temporary bracing per BCSI Unless noted otherwise top chord shall have properly attached structural sheathing and bottom chord shall have a properly attached rigid ce ling Locations shown for permanent lateral restraint of webs shall have bracing nstalled per BCSI sections B3 B7 or B10 as applicable

ITW Building Components Group Inc (ITWBCG) shall not be respons ble for any deviation from this design, any failure to build the truss in conformance with ANSI/TPI 1 or for handl ng shipping installation & bracing of trusses Apply plates to each face of truss and posit on as shown above and on the individual Details unless noted otherw se Refer to drawings 160A-Z for standard plate pos tions A seal on this draw ng or cover page I st ng this drawing ndicates acceptance of professional engineering respons b lity solely for the des gn shown The suitabil ty and use of this design for any structure is the responsib lity of the Build ng Designer per ANSI/TPI 1 Sec 2 For more nformation see This job general notes page ITW-BCG www itwbcg com TPI www tp nst org WTCA www sbcindustry com ICC www iccsafe org

WILLIAM H. KRICK LICENSE No. 70861 STATE OF FLORIDA PROFESSIONAL ENGINEER
08/28/2013

TC LL	20.0 PSF	REF	R215-- 62545
TC DL	10.0 PSF	DATE	08/28/13
BC DL	10.0 PSF	DRW	HCUSR215 13240015
BC LL	0.0 PSF	HC-ENG	KD/AP
TOT.LD.	40.0 PSF	SEQN-	381372
DUR.FAC.	1.25	FROM	CDM
SPACING	24.0"	JREF-	1UZ6215_Z01

Gable Stud Reinforcement Detail

ASCE 7-10 140 mph Wind Speed, 30' Mean Height, Enclosed, Exposure C, Kzt = 100

Or 120 mph Wind Speed 30' Mean Height Partially Enclosed Exposure C Kzt = 100
Or 120 mph Wind Speed 30' Mean Height Enclosed Exposure D Kzt = 100
Or 100 mph wind speed 30' Mean Height Partially Enclosed Exposure D Kzt = 100

Max Gable Vertical Length	2x4 Gable Vertical Spacing	Species	Brace Grade	No Braces	(1) 1x4 "L" Brace * Group A	(1) 1x4 "L" Brace * Group B	(1) 2x4 "L" Brace * Group A	(1) 2x4 "L" Brace * Group B	(2) 2x4 "L" Brace ** Group A	(2) 2x4 "L" Brace ** Group B	(1) 2x6 "L" Brace * Group A	(1) 2x6 "L" Brace * Group B	(2) 2x6 "L" Brace ** Group A	(2) 2x6 "L" Brace ** Group B
	24" o.c	SPF HF	#1 / #2	4' 1"	6' 11"	7' 2"	8' 2"	8' 6"	9' 9"	10' 2"	12' 10"	13' 4"	14' 0"	14' 0"
			#3	3' 10"	6' 2"	6' 7"	8' 1"	8' 5"	9' 8"	10' 0"	12' 8"	13' 2"	14' 0"	14' 0"
			Stud	3' 10"	6' 10"	7' 1"	8' 1"	8' 5"	9' 8"	10' 0"	12' 8"	13' 2"	14' 0"	14' 0"
			Standard	3' 10"	6' 5"	6' 10"	8' 1"	8' 5"	9' 8"	10' 0"	12' 8"	13' 2"	14' 0"	14' 0"
		SP DFL	#1	4' 2"	7' 0"	7' 3"	8' 3"	8' 7"	9' 9"	10' 2"	12' 11"	13' 5"	14' 0"	14' 0"
			#2	4' 1"	6' 10"	7' 2"	8' 2"	8' 6"	9' 9"	10' 2"	12' 10"	13' 4"	14' 0"	14' 0"
			#3	3' 10"	5' 6"	5' 10"	7' 4"	7' 10"	9' 8"	10' 0"	11' 6"	12' 4"	14' 0"	14' 0"
			Stud	3' 10"	5' 6"	5' 10"	7' 4"	7' 10"	9' 8"	10' 0"	11' 6"	12' 4"	14' 0"	14' 0"
			Standard	3' 8"	4' 9"	5' 1"	6' 4"	6' 10"	8' 7"	9' 3"	10' 0"	10' 8"	13' 7"	14' 0"
	16" o.c	SPF HF	#1 / #2	4' 8"	7' 11"	8' 3"	9' 4"	9' 9"	11' 2"	11' 7"	14' 0"	14' 0"	14' 0"	14' 0"
			#3	4' 5"	7' 6"	8' 3"	9' 3"	9' 7"	11' 0"	11' 6"	14' 0"	14' 0"	14' 0"	14' 0"
			Stud	4' 5"	7' 10"	8' 1"	9' 3"	9' 7"	11' 0"	11' 6"	14' 0"	14' 0"	14' 0"	14' 0"
			Standard	4' 5"	7' 10"	8' 1"	9' 3"	9' 7"	11' 0"	11' 6"	14' 0"	14' 0"	14' 0"	14' 0"
		SP DFL	#1	4' 9"	8' 0"	8' 3"	9' 5"	9' 9"	11' 2"	11' 8"	14' 0"	14' 0"	14' 0"	14' 0"
			#2	4' 8"	7' 11"	8' 3"	9' 4"	9' 9"	11' 2"	11' 7"	14' 0"	14' 0"	14' 0"	14' 0"
			#3	4' 5"	6' 9"	7' 2"	9' 0"	9' 7"	11' 0"	11' 6"	14' 0"	14' 0"	14' 0"	14' 0"
			Stud	4' 5"	6' 9"	7' 2"	9' 0"	9' 7"	11' 0"	11' 6"	14' 0"	14' 0"	14' 0"	14' 0"
			Standard	4' 5"	5' 10"	6' 3"	7' 9"	8' 4"	10' 6"	11' 3"	12' 3"	13' 1"	14' 0"	14' 0"
	12" o.c	SPF HF	#1 / #2	5' 2"	8' 9"	9' 1"	10' 4"	10' 9"	11' 2"	12' 9"	14' 0"	14' 0"	14' 0"	14' 0"
			#3	4' 10"	8' 7"	8' 11"	10' 2"	10' 7"	12' 2"	12' 8"	14' 0"	14' 0"	14' 0"	14' 0"
			Stud	4' 10"	8' 7"	8' 11"	10' 2"	10' 7"	12' 2"	12' 8"	14' 0"	14' 0"	14' 0"	14' 0"
			Standard	4' 10"	8' 7"	8' 11"	10' 2"	10' 7"	12' 2"	12' 8"	14' 0"	14' 0"	14' 0"	14' 0"
		SP DFL	#1	5' 3"	8' 9"	9' 1"	10' 4"	10' 9"	12' 4"	12' 10"	14' 0"	14' 0"	14' 0"	14' 0"
			#2	5' 2"	8' 9"	9' 1"	10' 4"	10' 9"	12' 3"	12' 9"	14' 0"	14' 0"	14' 0"	14' 0"
			#3	4' 10"	7' 9"	8' 3"	10' 2"	10' 7"	12' 2"	12' 8"	14' 0"	14' 0"	14' 0"	14' 0"
			Stud	4' 10"	7' 9"	8' 3"	10' 2"	10' 7"	12' 2"	12' 8"	14' 0"	14' 0"	14' 0"	14' 0"
			Standard	4' 10"	6' 9"	7' 2"	9' 0"	9' 7"	12' 2"	12' 8"	14' 0"	14' 0"	14' 0"	14' 0"

Bracing Group Species and Grades

Group A

Spruce-Pine-Fir

#1 / #2	Standard
#3	Stud

Hem-Fir

#2	Stud
#3	Standard

Douglas Fir-Larch

#3
Stud
Standard

Southern Pine***

#3
Stud
Standard

Group B

Hem-Fir

#1 & Btr
#1

Douglas Fir-Larch

#1
#2

Southern Pine***

#1
#2

1x4 Braces shall be SRB (Stress-Rated Board).

***For 1x4 So. Pine use only Industrial 55 or Industrial 45 Stress-Rated Boards. Group B values may be used with these grades.

Gable Truss Detail Notes

Wind Load deflection criterion is L/240

Provide uplift connections for 100 plf over continuous bearing (5 psf TC Dead Load)

Gable end supports load from 4' 0" outlookers with 2' 0" overhang or 12" plywood overhang.

So. Pine lumber design values based on the ALSC January 2012 rulin

Attach "L" braces w th 10d (0.128"x3.0" min) nails

* For (1) "L" brace: space nails at 2" o.c n 18" end zones and 4" o.c. between zones.

** For (2) "L" braces: space nails at 3" o.c. n 18" end zones and 6" o.c. between zones

"L" bracing must be a minimum of 80% of web member length.

Gable Vertical Plate Sizes

Vertical Length	No Splice
Less than 4' 0"	1.5X4
Greater than 4' 0" but less than 11' 6"	2.5X4
Greather than 11' 6"	3.5X4

+ Refer to common truss design for peak splice and heel plates

Refer to the Building Designer for conditions not addressed by this detail

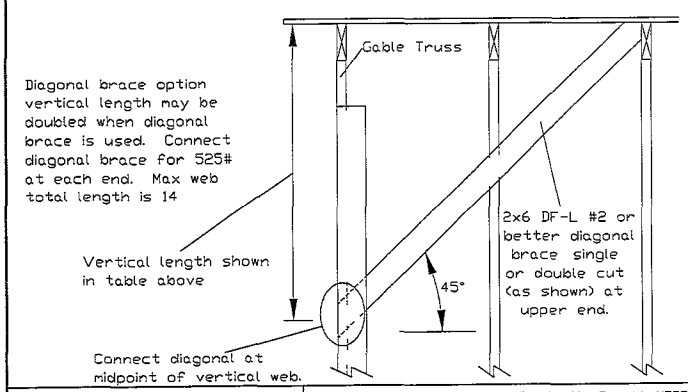

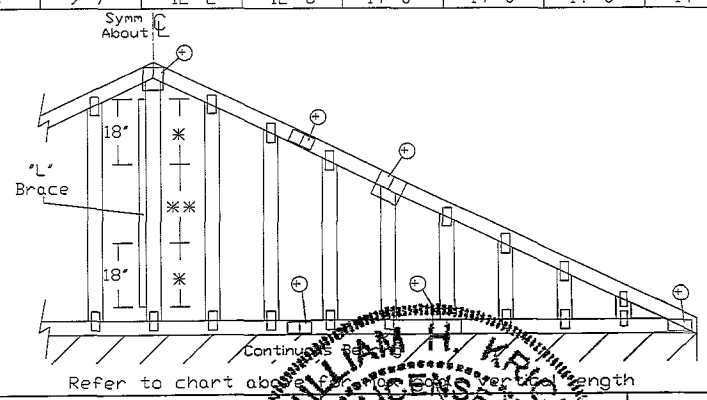

Refer to chart above for max gable vertical length

WILLIAM H. KRICK LICENSE No. 70861 STATE OF FLORIDA PROFESSIONAL ENGINEER Aug 28

08/28/2013

TW Building Components Group Inc.

Earth City MO 63045

WARNING READ AND FOLLOW ALL NOTES ON THIS DRAWING!
IMPORTANT FURNISH THIS DRAWING TO ALL CONTRACTORS INCLUDING THE INSTALLERS.

Trusses require extreme care in fabricating handling, shipping installing and bracing. Refer to and follow the latest edition of BCSI (Building Component Safety Information, by TPI and WTCA) for safety practices prior to performing these functions. Installers shall provide temporary bracing per BCSI. Unless noted otherwise top chord shall have properly attached structural sheathing and bottom chord shall have a properly attached rigid ceiling. Locations shown for permanent lateral restraint of webs shall have bracing installed per BCSI sections B3 B7 or B10, as applicable. Apply plates to each face of truss and position as shown above and on the Joint Details, unless noted otherwise Refer to drawings 160A-Z for standard plate positions.

ITW Building Components Group Inc. shall not be responsible for any deviation from this drawing or failure to build the truss in conformance with ANSI/TPI 1, or for handling shipping, installation & bracing of trusses. A seal on this drawing or cover page listing this drawing, indicates acceptance of professional engineering responsibility solely for the design shown. The suitability and use of this drawing for any structure is the responsibility of the Building Designer per ANSI/TPI 1 Sec.2.
For more information see this job's general notes page and these web sites:
ITWBCG: www.itwbcg.com, TPI: www.tpinst.org, WTCA: www.sbcindustry.org ICC: www.iccsafe.org

MAX TOT LD 60 PSF

MAX SPACING 24' 0"

REF	ASCE7-10-GAB14030
DATE	2/14/12
DRWG	A14030ENC100212

Gable Detail
For Let-in Verticals

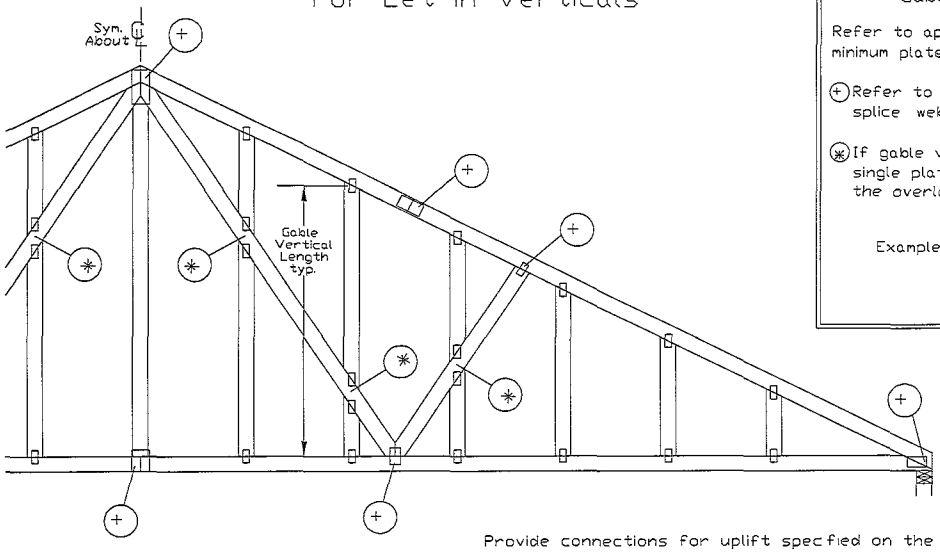

Gable Truss Plate Sizes

Refer to appropriate ITW gable detail for minimum plate sizes for vertical studs.

(+) Refer to Engineered truss design for peak splice web and heel plates

(*) If gable vertical plates overlap use a single plate that covers the total area of the overlapped plates to span the web

Example

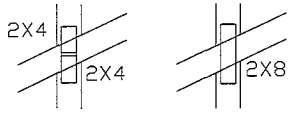

"T" Reinforcement Attachment Detail

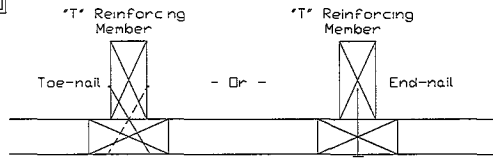

Provide connections for uplift specified on the engineered truss design.

Attach each "T" reinforcing member with

End Driven Nails
- 10d Common (0.148"x 3" min) Nails at 4" o.c plus
- (4) nails in the top and bottom chords.

Toenailed Nails.
- 10d Common (0.148"x3" min) Toenails at 4" o.c plus
- (4) toenails in the top and bottom chords

This detail to be used with the appropriate ITW gable detail for ASCE wind load

ASCE 7-98 Gable Detail Drawings
A13015980109 A12015980109 A11015980109 A10015980109
A13030980109 A12030980109 A11030980109 A10030980109

ASCE 7-02 Gable Detail Drawings
A13015020109 A12015020109 A11015020109 A10015020109 A14015020109
A13030020109 A12030020109 A11030020109 A10030020109 A14030020109

ASCE 7-05 Gable Detail Drawings
A13015050109 A12015050109 A11015050109 A10015050109 A14015050109
A13030050109 A12030050109 A11030050109 A10030050109 A14030050109

ASCE 7-10 Gable Detail Drawings
A11515ENC100212 A12015ENC100212 A14015ENC100212 A16015ENC100212
A18015ENC100212 A20015ENC100212 A20015END100212 A20015PED100212
A11530ENC100212 A12030ENC100212 A14030ENC100212, A16030ENC100212,
A18030ENC100212 A20030ENC100212 A20030END100212, A20030PED100212

See appropriate ITW gable detail for maximum unreinforced gable vertical length.

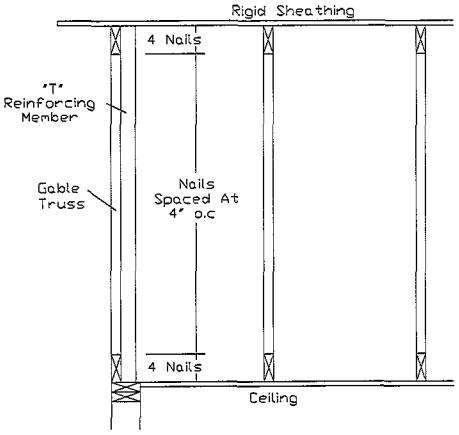

To convert from "L" to "T" reinforcing members multiply "T" increase by length (based on appropriate ITW gable detail)

Maximum allowable "T" reinforced gable vertical length is 14' from top to bottom chord.

"T" reinforcing member material must match size specie and grade of the "L" reinforcing member

Web Length Increase w/ "T" Brace

"T" Reinf Mbr Size	"T" Increase
2x4	30 %
2x6	20 %

Example
- ASCE 7-10 Wind Speed = 120 mph
- Mean Roof Height = 30 ft Kzt = 1.00
- Gable Vertical = 24"oc SP #3
- "T" Reinforcing Member Size = 2x4
- "T" Brace Increase (From Above) = 30% = 1.30
- (1) 2x4 "L" Brace Length = 8' 7"
- Maximum "T" Reinforced Gable Vertical Length
  1.30 x 8' 7" = 11' 2"

ITW Building Components Group Inc.

Earth City MO 63045

WARNING! READ AND FOLLOW ALL NOTES ON THIS DRAWING!
IMPORTANT FURNISH THIS DRAWING TO ALL CONTRACTORS INCLUDING THE INSTALLERS.

Trusses require extreme care in fabricating, handling, shipping, installing and bracing. Refer to and follow the latest edition of BCSI (Building Component Safety Information, by TPI and WTCA) for safety practices prior to performing these functions. Installers shall provide temporary bracing per BCSI. Unless noted otherwise, top chord shall have properly attached structural sheathing and bottom chord shall have a properly attached rigid ceiling. Locations shown for permanent lateral restraint of webs shall have bracing installed per BCSI sections B3, B7 or B10, as applicable. Apply plates to each face of truss and position as shown above and on the Joint Details unless noted otherwise. Refer to drawings 160A-Z for standard plate positions.

ITW Building Components Group Inc. shall not be responsible for any deviation from this drawing, or failure to build the truss in conformance with ANSI/TPI 1, or for handling, shipping, installation and bracing of trusses. A seal on this drawing or cover page listing this drawing indicates acceptance of professional engineering responsibility solely for the design shown. The suitability and use of this drawing for any structure is the responsibility of the Building Designer per ANSI/TPI 1 Sec.2.
For more information see this job's general notes page and these web sites:
ITWBCG: www.itwbcg.com, TPI: www.tpinst.org, WTCA: www.sbcindustry.org, ICC: www.iccsafe.org

WILLIAM H. PATRICK
LICENSED
No. 70861
STATE OF FLORIDA
PROFESSIONAL ENGINEER
Aug 28, 13
08/28/2013

MAX TOT LD	60 PSF
DUR FAC	ANY
MAX SPACING	24.0"

REF	LET-IN VERT
DATE	2/16/12
DRWG	GBLLETIN0212

Piggyback Detail - ASCE 7-10 160 mph, 30' Mean Height, Enclosed, Exposure C, Kzt=1.00

160 mph Wind 30.00 ft Mean Hgt ASCE 7-10 Enclosed Bldg. located anywhere in roof Exp C Wind DL= 5.0 psf (min) Kzt=1.0
Or 140 mph wind 30.00 ft Mean Hgt ASCE 7-10 Enclosed Bldg. located anywhere in roof Exp D wind DL= 5.0 psf (min) Kzt=1.0

Note Top chords of trusses supporting piggyback cap trusses must be adequately braced by sheathing or purlins The building Engineer of Record shall provide diagonal bracing or any other suitable anchorage to permanently restrain purlins and lateral bracing for out of plane loads over gable ends

Maximum truss spacing is 24" o.c. detail is not applicable if cap supports additional loads such as cupola steeple chimney or drag strut loads

** Refer to Engineer's sealed truss design drawing for piggyback and base truss specifications

Detail A Purlin Spacing = 24" o.c. or less

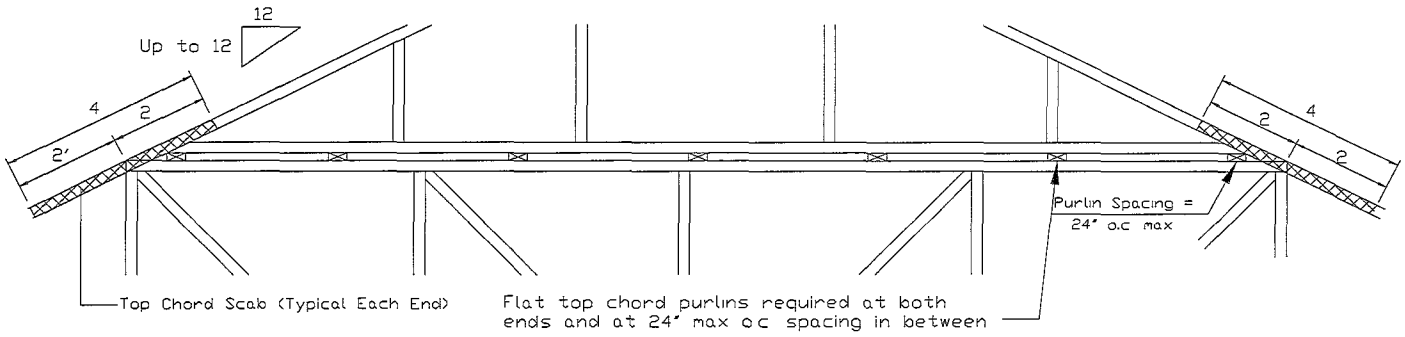

Piggyback cap truss slant nailed to all top chord purlin bracing with (2) 16d box nails (0.135"x3.5") and secure top chord with 2x4 #3 grade scab (1 side only at each end) attached with 2 rows of 10d box nails (0.128"x3") at 4" o.c.

Attach purlin bracing to the flat top chord using (2) 16d box nails (0.135"x3.5")

The top chord #3 grade 2x4 scab may be replaced with either of the following (1) 3X8 Trulox plate attached with (8) 0.120"x1.375" nails (4) into cap TC & (4) into base truss TC or (1) 28PB wave piggyback plate plated to the piggyback truss TC and attached to the base truss TC with (4) 0.120"x1.375" nails Note Nailing thru holes of wave plate is acceptable

Detail B Purlin Spacing > 24" o.c.

Piggyback cap truss slant nailed to all top chord purlin bracing with (2) 16d box nails (0.135"x3.5") and secure top chord with 2x4 #3 grade scab (1 side only at each end) attached with 2 rows of 10d box nails (0.128"x3") at 4" o.c.

Attach purlin bracing to the flat top chord using a minimum of (2) 16d box nails (0.135"x3.5")

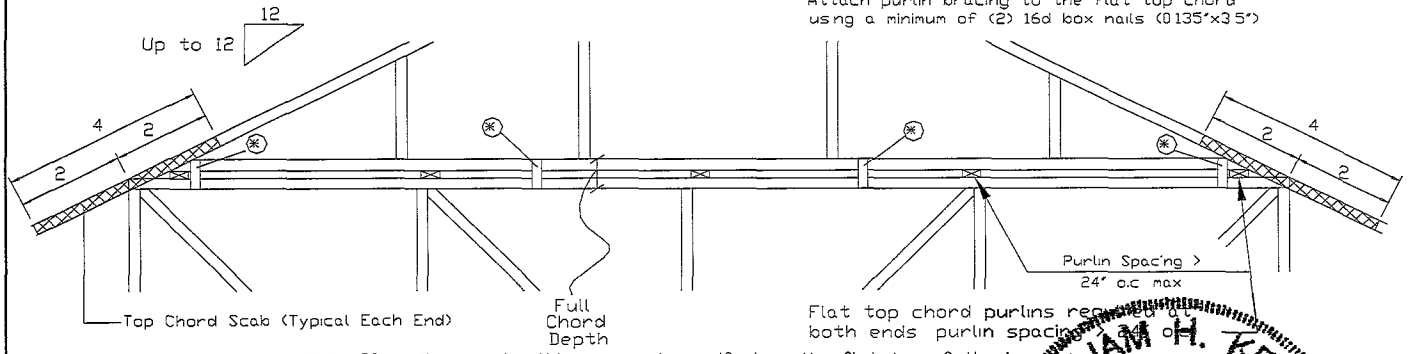

Note If purlins or sheathing are not specified on the flat top of the base truss purlins must be installed at 24" o.c. max and use Detail A.

* In addition provide connection with one of the following methods:

Trulox
Use 3X8 Trulox plates for 2x4 chord member and 3X10 Trulox plates for 2x6 and larger chord members Attach to each face @ 8" o.c. with (4) 0.120"x1.375" nails into cap bottom chord and (4) in base truss top chord Trulox plates may be staggered 4" o.c. front to back faces.

APA Rated Gusset
8"x8"x7/16" (min) APA rated sheathing gussets (each face) Attach @ 8" o.c. with (8) 6d common (0.113"x2") nails per gusset (4) in cap bottom chord and (4) in base truss top chord. Gussets may be staggered 4" o.c. front to back faces

2x4 Vertical Scabs
2x4 SPF #2 full chord depth scabs (each face) Attach @ 8" o.c. with (6) 10d box nails (0.128"x3") per scab (3) in cap bottom chord and (3) in base truss top chord. Scabs may be staggered 4" o.c. front to back faces

28PB Wave Piggyback Plate
One 28PB wave piggyback plate to each face @ 8" o.c. Attach teeth to piggyback at time of fabrication Attach to supporting truss with (4) 0.120"x1.375" nails per face per ply Piggyback plates may be staggered 4" o.c. front to back faces.

ITW Building Components Group Inc.

Earth City MO 63045

WARNING READ AND FOLLOW ALL NOTES ON THIS DRAWING!
IMPORTANT FURNISH THIS DRAWING TO ALL CONTRACTORS INCLUDING THE INSTALLERS.

Trusses require extreme care in fabricating, handling, shipping installing and bracing. Refer to and follow the latest edition of BCSI (Building Component Safety Information by TPI and WTCA) for safety practices prior to performing these functions. Installers shall provide temporary bracing per BCSI. Unless noted otherwise top chord shall have properly attached structural sheathing and bottom chord shall have a properly attached rigid ceiling. Locations shown for permanent lateral restraint of webs shall have bracing installed per BCSI sections B3 B7 or B10 as applicable Apply plates to each face of truss and position as shown above and on the Joint Details unless noted otherwise. Refer to drawings 160A-Z for standard plate positions.

ITW Building Components Group Inc. shall not be responsible for any deviation from this drawing or failure to build the truss in conformance with ANSI/TPI 1, or for handling, shipping, installation & bracing of trusses. A seal on this drawing or cover page listing this drawing, indicates acceptance of professional engineering responsibility solely for the design shown. The suitability and use of this drawing for any structure is the responsibility of the Building Designer per ANSI/TPI 1 Sec.2.
For more information see this job's general notes page and these web sites:
ITWBCG: www.twbcg.com, TPI: www.tpinst.org, WTCA: www.sbcindustry.org, ICC: www.iccsafe.or

WILLIAM H. KRICK LICENSE No. 70861 STATE OF FLORIDA PROFESSIONAL ENGINEER Aug 28, 2013

08/28/2013

SPACING 24.0"

REF	PIGGYBACK
DATE	2/14/12
DRWG	PB160100212

Piggyback Detail - ASCE 7-10 160 mph, 30' Mean Height, Enclosed, Exposure C, Kzt=1.00

160 mph Wind 30.00 ft Mean Hgt ASCE 7-10 Enclosed Bldg located anywhere in roof Exp C Wind DL= 5.0 psf (min) Kzt=1.0
Or 140 mph wind 30.00 ft Mean Hgt ASCE 7-10 Enclosed Bldg located anywhere in roof Exp D wind DL= 5.0 psf (min) Kzt=1.0

Note Top chords of trusses supporting piggyback cap trusses must be adequately braced by sheathing or purlins The building Engineer of Record shall provide diagonal bracing or any other suitable anchorage to permanently restrain purlins and lateral bracing for out of plane loads over gable ends

Maximum truss spacing is 24" o.c detail is not applicable if cap supports additional loads such as cupola steeple chimney or drag strut loads

** Refer to Engineer's sealed truss design drawing for piggyback and base truss specifications

Detail A Purlin Spacing = 24" o.c or less

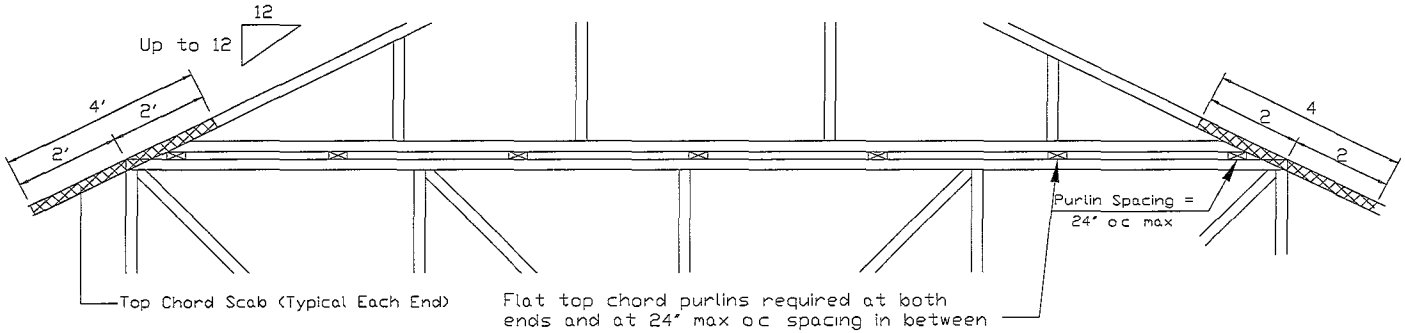

Piggyback cap truss slant nailed to all top chord purlin bracing with (2) 16d box nails (0.135"x3.5") and secure top chord with 2x4 #3 grade scab (1 side only at each end) attached with 2 rows of 10d box nails (0.128"x3") at 4" o.c

Attach purlin bracing to the flat top chord using (2) 16d box nails (0.135"x3.5")

The top chord #3 grade 2x4 scab may be replaced with either of the following (1) 3X8 Trulox plate attached with (8) 0.120"x1.375" nails (4) into cap TC & (4) into base truss TC or (1) 28PB wave piggyback plate plated to the piggyback truss TC and attached to the base truss TC with (4) 0.120"x1.375" nails Note Nailing thru holes of wave plate is acceptable

Detail B Purlin Spacing > 24" o.c

Piggyback cap truss slant nailed to all top chord purlin bracing with (2) 16d box nails (0.135"x3.5") and secure top chord with 2x4 #3 grade scab (1 side only at each end) attached with 2 rows of 10d box nails (0.128"x3") at 4" o.c

Attach purlin bracing to the flat top chord using a minimum of (2) 16d box nails (0.135"x3.5")

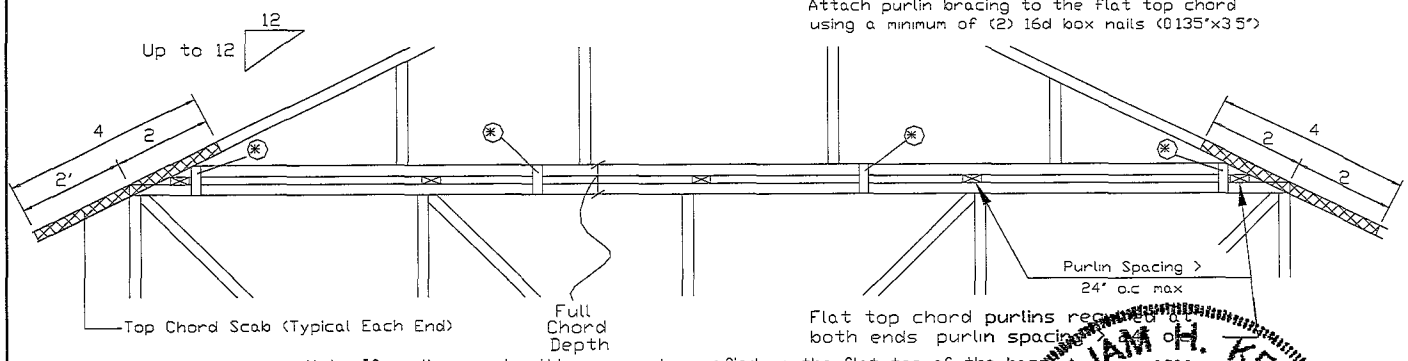

Note If purlins or sheathing are not specified on the flat top of the base truss purlins must be installed at 24" o.c max and use Detail A.

* In addition provide connection with one of the following methods

Trulox
Use 3X8 Trulox plates for 2x4 chord member and 3X10 Trulox plates for 2x6 and larger chord members Attach to each face @ 8" o.c with (4) 0.120"x1.375" nails into cap bottom chord and (4) in base truss top chord Trulox plates may be staggered 4" o.c front to back faces

APA Rated Gusset
8"x8"x7/16" (min) APA rated sheathing gussets (each face) Attach @ 8" o.c with (8) 6d common (0.113"x2") nails per gusset (4) in cap bottom chord and (4) in base truss top chord Gussets may be staggered 4" o.c front to back faces

2x4 Vertical Scabs
2x4 SPF #2 full chord depth scabs (each face) Attach @ 8" o.c with (6) 10d box nails (0.128"x3") per scab (3) in cap bottom chord and (3) in base truss top chord Scabs may be staggered 4" o.c front to back faces

28PB Wave Piggyback Plate
One 28PB wave piggyback plate to each face @ 8" o.c Attach teeth to piggyback at time of fabrication Attach to supporting truss with (4) 0.120"x1.375" nails per face per ply Piggyback plates may be staggered 4" o.c front to back faces

ITW Building Components Group Inc.

Earth City MO 63045

WARNING READ AND FOLLOW ALL NOTES ON THIS DRAWING!
IMPORTANT FURNISH THIS DRAWING TO ALL CONTRACTORS INCLUDING THE INSTALLERS.

Trusses require extreme care in fabricating handling, shipping, installing and bracing. Refer to and follow the latest edition of BCSI (Building Component Safety Information, by TPI and WTCA) for safety practices prior to performing these functions. Installers shall provide temporary bracing per BCSI. Unless noted otherwise top chord shall have properly attached structural sheathing and bottom chord shall have a properly attached rigid ceiling. Locations shown for permanent lateral restraint of webs shall have bracing installed per BCSI sections B3, B7 or B10, as applicable. Apply plates to each face of truss and position as shown above and on the Joint Details unless noted otherwise. Refer to drawings 160A-Z for standard plate positions.

ITW Building Components Group Inc. shall not be responsible for any deviation from this drawing or failure to build the truss in conformance with ANSI/TPI 1, or for handling, shipping, installation & bracing of trusses. A seal on this drawing or cover page listing this drawing, indicates acceptance of professional engineering responsibility solely for the design shown. The suitability and use of this drawing for any structure is the responsibility of the Building Designer per ANSI/TPI 1 Sec.2.
For more information see this job's general notes page and these web sites:
ITWBCG: www.itwbcg.com, TPI: www.tpinst.org, WTCA: www.sbcindustry.org, ICC: www.iccsafe.or

WILLIAM H. KRICK
LICENSE
No. 70861
STATE OF FLORIDA
PROFESSIONAL ENGINEER
Aug 28
08/28/2013

SPACING 24.0"

REF	PIGGYBACK
DATE	2/14/12
DRWG	PB160100212

Gable Stud Reinforcement Detail

ASCE 7-10 140 mph Wind Speed, 15' Mean Height, Enclosed, Exposure C, Kzt = 100

Or 120 mph Wind Speed 15 Mean Height Partially Enclosed Exposure C Kzt = 100
Or 120 mph Wind Speed 15 Mean Height Enclosed Exposure D Kzt = 100
Or 100 mph Wind Speed 15 Mean Height Partially Enclosed, Exposure D Kzt = 100

Max Gable Vertical Length	2x4 Gable Vertical Spacing	Species	Brace Grade	No Braces	(1) 1x4 "L" Brace * Group A	(1) 1x4 "L" Brace * Group B	(1) 2x4 "L" Brace * Group A	(1) 2x4 "L" Brace * Group B	(2) 2x4 "L" Brace ** Group A	(2) 2x4 "L" Brace ** Group B	(1) 2x6 "L" Brace * Group A	(1) 2x6 "L" Brace * Group B	(2) 2x6 "L" Brace ** Group A	(2) 2x6 "L" Brace ** Group B
	24" o.c.	SPF HF	#1 / #2	4 3"	7 3"	7 7"	8 7"	8 11"	10 3"	10 8"	13 6"	14 0"	14 0"	14 0"
			#3	4 1"	6 7"	7 1"	8 6"	8 10"	10 1"	10 6"	13 4"	13 10"	14 0"	14 0"
			Stud	4 1"	7 2"	7 5"	8 6"	8 10"	10 1"	10 6"	13 4"	13 10"	14 0"	14 0"
			Standard	4 1"	6 11"	7 5"	8 6"	8 10"	10 1"	10 6"	13 4"	13 10"	14 0"	14 0"
		SP DFL	#1	4 4"	7 4"	7 7"	8 8"	9 0"	10 3"	10 8"	13 7"	14 0"	14 0"	14 0"
			#2	4 3"	7 3"	7 7"	8 7"	8 11"	10 3"	10 8"	13 6"	14 0"	14 0"	14 0"
			#3	4 1"	5 11"	6 4"	7 11"	8 5"	10 1"	10 6"	12 5"	13 3"	14 0"	14 0"
			Stud	4 1"	5 11"	6 4"	7 11"	8 5"	10 1"	10 6"	12 5"	13 3"	14 0"	14 0"
			Standard	3 11"	5 2"	5 5"	6 10"	7 4"	9 3"	9 11"	10 9"	11 6"	14 0"	14 0"
	16" o.c.	SPF HF	#1 / #2	4 11"	8 4"	8 8"	9 10"	10 3"	11 8"	12 2"	14 0"	14 0"	14 0"	14 0"
			#3	4 8"	8 1"	8 8"	9 8"	10 1"	11 7"	12 1"	14 0"	14 0"	14 0"	14 0"
			Stud	4 8"	8 2"	8 6"	9 8"	10 1"	11 7"	12 1"	14 0"	14 0"	14 0"	14 0"
			Standard	4 8"	8 2"	8 6"	9 8"	10 1"	11 7"	12 1"	14 0"	14 0"	14 0"	14 0"
		SP DFL	#1	5 0"	8 5"	8 8"	9 11"	10 3"	11 9"	12 3"	14 0"	14 0"	14 0"	14 0"
			#2	4 11"	8 4"	8 8"	9 10"	10 3"	11 8"	12 2"	14 0"	14 0"	14 0"	14 0"
			#3	4 8"	7 3"	7 9"	9 8"	10 1"	11 7"	12 1"	14 0"	14 0"	14 0"	14 0"
			Stud	4 8"	7 3"	7 9"	9 8"	10 1"	11 7"	12 1"	14 0"	14 0"	14 0"	14 0"
			Standard	4 8"	6 3"	6 8"	8 5"	8 11"	11 4"	12 1"	13 2"	14 0"	14 0"	14 0"
	12" o.c.	SPF HF	#1 / #2	5 5"	9 2"	9 6"	10 10"	11 3"	11 8"	13 5"	14 0"	14 0"	14 0"	14 0"
			#3	5 1"	9 0"	9 4"	10 8"	11 1"	12 9"	13 3"	14 0"	14 0"	14 0"	14 0"
			Stud	5 1"	9 0"	9 4"	10 8"	11 1"	12 9"	13 3"	14 0"	14 0"	14 0"	14 0"
			Standard	5 1"	9 0"	9 4"	10 8"	11 1"	12 9"	13 3"	14 0"	14 0"	14 0"	14 0"
		SP DFL	#1	5 6"	9 3"	9 7"	10 11"	11 4"	12 11"	13 6"	14 0"	14 0"	14 0"	14 0"
			#2	5 5"	9 2"	9 6"	10 10"	11 3"	12 11"	13 5"	14 0"	14 0"	14 0"	14 0"
			#3	5 1"	8 4"	8 11"	10 8"	11 1"	12 9"	13 3"	14 0"	14 0"	14 0"	14 0"
			Stud	5 1"	8 4"	8 11"	10 8"	11 1"	12 9"	13 3"	14 0"	14 0"	14 0"	14 0"
			Standard	5 1"	7 3"	7 9"	9 8"	10 4"	12 9"	13 3"	14 0"	14 0"	14 0"	14 0"

Bracing Group Species and Grades.

Group A

Spruce-Pine-Fir

#1 / #2	Standard
#3	Stud

Hem-Fir

#2	Stud
#3	Standard

Douglas Fir-Larch

#3
Stud
Standard

Southern Pine***

#3
Stud
Standard

Group B

Hem-Fir

#1 & Btr
#1

Douglas Fir-Larch

#1
#2

Southern Pine***

#1
#2

1x4 Braces shall be SRB (Stress-Rated Board)

***For 1x4 So. Pine use only Industrial 55 or Industrial 45 Stress-Rated Boards. Group B values may be used with these grades.

Gable Truss Detail Notes

Wind Load deflection criterion is L/240

Provide uplift connections for 55 plf over continuous bearing (5 psf TC Dead Load)

Gable end supports load from 4 0" outlookers with 2' 0" overhang or 12" plywood overhang.

So. Pine lumber design values based on the ALSC January 2012 rulin

Attach "L" braces with 10d (0.128"x3 0" min) nails

* For (1) "L" brace: space nails at 2" o.c. n 18" end zones and 4" o.c. between zones

** For (2) "L" braces. space nails at 3" o.c. n 18" end zones and 6" o.c between zones

"L" bracing must be a minimum of 80% of web member length.

Gable Vertical Plate Sizes

Vertical Length	No Splice
Less than 4 0"	1X4 or 2X3
Greater than 4 0" but less than 11 6"	2.5X4
Greather than 11 6"	3X4

+ Refer to common truss design for peak splice and heel plates

Refer to the Building Designer for conditions not addressed by this detail

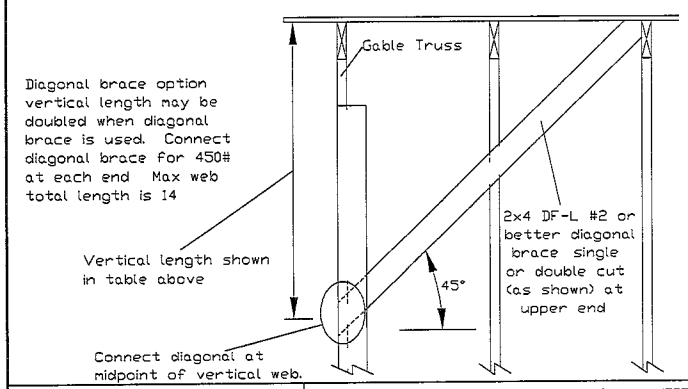

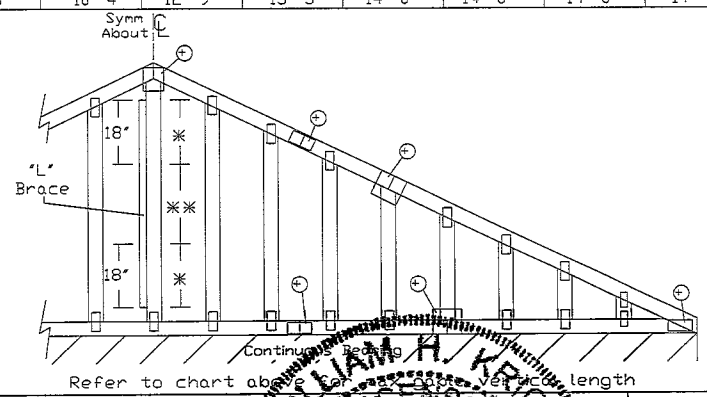

Refer to chart above for [illegible] vertical length

WILLIAM H. KRUCK
LICENSE
No. 70861
STATE OF FLORIDA
PROFESSIONAL ENGINEER
Aug 28
08/28/2013

ITW Building Components Group Inc.

Earth City MO 63045

WARNING READ AND FOLLOW ALL NOTES ON THIS DRAWING!
IMPORTANT FURNISH THIS DRAWING TO ALL CONTRACTORS INCLUDING THE INSTALLERS

Trusses require extreme care in fabricating, handling, shipping insta ing and bracing. Refer to and follow the latest edition of BCSI (Building Component Safety Information by TPI and WTCA) for safety practices prior to performing these functions. Installers shall provide temporary bracing per BCSI. Unless noted otherwise top chord shall have properly attached structural sheathing and bottom chord shall have a properly attached rigid ceiling Locations shown for permanent lateral restraint of webs shall have bracing installed per BCSI sections B3 B7 or B10 as applicable. Apply plates to each face of truss and position as shown above and on the Joint Details unless noted otherwise. Refer to drawings 160A-Z for standard plate positions.

ITW Building Components Group Inc. shall not be responsible for any deviation from this drawing, any failure to build the truss in conformance with ANSI/TPI 1, or for handling, shipping, installation and bracing of trusses. A seal on this drawing or cover page listing this drawing, indicates acceptance of professional engineering responsibility solely for the design shown. The suitability and use of this drawing for any structure is the responsibility of the Building Designer per ANSI/TPI 1 Sec.2. For more information see this job's general notes page and these web sites: ITWBCG: www.itwbcg.com, TPI: www.tpinst.org, WTCA: www.sbcindustry.org, ICC: www.iccsafe.org

MAX TOT LD 60 PSF

MAX SPACING 24 0"

REF	ASCE7-10-GAB14015
DATE	2/14/12
DRWG	A14015ENC100212

CLB WEB BRACE SUBSTITUTION

THIS DETAIL IS TO BE USED WHEN CONTINUOUS LATERAL BRACING (CLB) IS SPECIFIED ON A TRUSS DESIGN BUT AN ALTERNATIVE WEB BRACING METHOD IS DESIRED

NOTES

THIS DETAIL IS ONLY APPLICABLE FOR CHANGING THE SPECIFIED CLB SHOWN ON SINGLE PLY SEALED DESIGNS TO T-BRACING OR SCAB BRACING

ALTERNATIVE BRACING SPECIFIED IN CHART BELOW MAY BE CONSERVATIVE FOR MINIMUM ALTERNATIVE BRACING RE-RUN DESIGN WITH APPROPRIATE BRACING

WEB MEMBER SIZE	SPECIFIED CLB BRACING	ALTERNATIVE BRACING T OR L-BRACE	ALTERNATIVE BRACING SCAB BRACE
2X3 OR 2X4	1 ROW	2X4	1-2X4
2X3 OR 2X4	2 ROWS	2X6	2-2X4
2X6	1 ROW	2X4	1-2X6
2X6	2 ROWS	2X6	2-2X4(*)
2X8	1 ROW	2X6	1-2X8
2X8	2 ROWS	2X6	2-2X6(*)

T-BRACE, L-BRACE AND SCAB BRACE TO BE SAME SPECIES AND GRADE OR BETTER THAN WEB MEMBER UNLESS SPECIFIED OTHERWISE ON ENGINEER S SEALED DESIGN

(*) CENTER SCAB ON WIDE FACE OF WEB APPLY (1) SCAB TO EACH FACE OF WEB

T-BRACING OR L-BRACING

APPLY TO EITHER SIDE OF WEB NARROW FACE
ATTACH WITH 10d BOX OR GUN
(0.128"x 3",MIN) NAILS
AT 6" OC
BRACE IS A
MINIMUM 80% OF WEB
MEMBER LENGTH

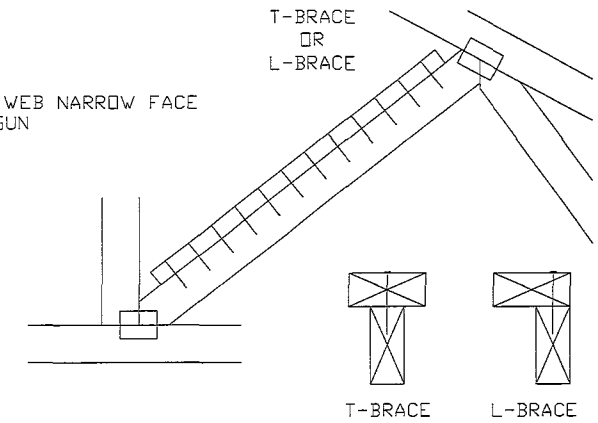

SCAB BRACING

APPLY SCAB(S) TO WIDE FACE OF WEB
NO MORE THAN (1) SCAB PER FACE
ATTACH WITH 10d BOX OR GUN
(0.128"x 3" MIN) NAILS
AT 6" OC
BRACE IS A MINIMUM
80% OF WEB MEMBER LENGTH

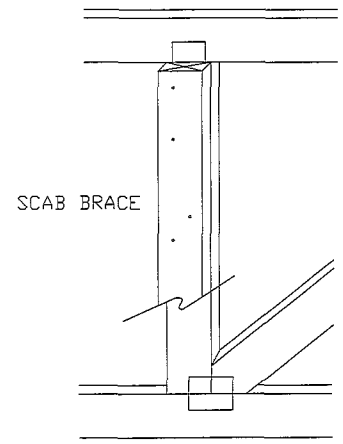

TW
Building Components Group Inc.
Earth City MO 63045

WARNING READ AND FOLLOW ALL NOTES ON THIS SHEET!
Trusses require extreme care in fabricating, handling shipping installing and bracing. Refer to and follow BCSI (Building Component Safety Information, by TPI and WTCA) for safety practices required in performing these functions. Installers shall provide temporary bracing per BCSI. Unless noted otherwise top chord shall have properly attached structural panels and bottom chord shall have properly attached rigid ceiling. Locations shown for permanent lateral restraint of webs shall have bracing installed per BCSI sections B3 & B7 See this job's general notes page for more information.

IMPORTANT FURNISH COPY OF THIS DESIGN TO INSTALLATION CONTRACTOR.
ITW Building Components Group Inc. (ITWBCG) shall not be responsible for any deviation from this design, any failure to build the truss in conformance with TPI or fabricating, handling, shipping, installing & bracing of trusses. ITWBCG connector plates are made of 20/18/16GA (W,H/S/K) ASTM A653 grade 37/40/60 (K/W/H,S) galv steel Apply plates to each face of truss, positioned as shown on this and on Joint Details.
A seal on this drawing or cover page indicates acceptance and professional engineering responsibility solely for the truss component design shown. The suitability and use of this component for any building is the responsibility of the Building Designer per ANST/TPI 1 Sec. 2.
ITW-BCG: www.itwbcg.com, TPI: www.tpinst.com, WTCA: www.sbcindustry.com ICC: www.iccsafe.org

WILLIAM H. KRICK
LICENSE
No. 70861
STATE OF FLORIDA
PROFESSIONAL ENGINEER
AUG 28

08/28/2013

TC LL	PSF	REF CLB SUBST
TC DL	PSF	DATE 1/1/09
BC DL	PSF	DRWG BRCLBSUB0109
BC LL	PSF	
TOT LD	PSF	
DUR FAC		
SPACING		

NAIL SPACING DETAIL

MINIMUM SPACING FOR SINGLE BLOCK IS SHOWN DOUBLE NAIL SPACINGS AND STAGGER NAILING FOR TWO BLOCKS GREATER SPACING MAY BE REQUIRED TO AVOID SPLITTING

BLOCK LOCATION, SIZE, LENGTH,GRADE AND TOTAL NUMBER AND TYPE OF NAILS ARE TO BE SPECIFIED ON SEALED DESIGN REFERENCING THIS DETAIL

LOAD PERPENDICULAR TO GRAIN
A - EDGE DISTANCE AND SPACING BETWEEN STAGGERED ROWS OF NAILS (6 NAIL DIAMETERS)
B - SPACING OF NAILS IN A ROW (12 NAIL DIAMETERS)
C - END DISTANCE (15 NAIL DIAMETERS)

LOAD PARALLEL TO GRAIN
A - EDGE DISTANCE (6 NAIL DIAMETERS)
C - SPACING OF NAILS IN A ROW AND END DISTANCE (15 NAIL DIAMETERS)
D - SPACING BETWEEN STAGGERED ROWS OF NAILS (7 1/2 NAIL DIAMETERS)

IF NAIL HOLES ARE PREBORED, SOME SPACING MAY BE REDUCED BY THE AMOUNTS GIVEN BELOW
* SPACING MAY BE REDUCED BY 50%
** SPACING MAY BE REDUCED BY 33%

MINIMUM NAIL SPACING DISTANCES

NAIL TYPE	DISTANCES A	B*	C**	D
8d BOX (0 113"X 2 5" MIN)	3/4"	1 3/8"	1 3/4"	7/8"
10d BOX (0 128"X 3",MIN)	7/8"	1 5/8"	2"	1"
12d BOX (0 128"X 3 25",MIN)	7/8"	1 5/8"	2"	1"
16d BOX (0 135"X 3 5",MIN)	7/8	1 5/8"	2 1/8"	1 1/8"
20d BOX (0 148"X 4 ",MIN)	1"	1 7/8"	2 1/4"	1 1/8"
8d COMMON (0 131"X 2 5",MIN)	7/8"	1 5/8"	2"	1"
10d COMMON (0 148"X 3 ",MIN)	1"	1 7/8"	2 1/4"	1 1/8"
12d COMMON (0 148"X 3 25",MIN)	1"	1 7/8"	2 1/4"	1 1/8"
16d COMMON (0 162"X 3 5",MIN)	1'	2"	2 1/2"	1 1/4"
GUN (0 120"X 2 5",MIN)	3/4"	1 1/2"	1 7/8"	1"
GUN (0 131"X 2 5",MIN)	7/8"	1 5/8	2"	1"
GUN (0 120"X 3 ",MIN)	3/4"	1 1/2"	1 7/8"	1"
GUN (0 131"X 3 ",MIN)	7/8"	1 5/8"	2"	1"

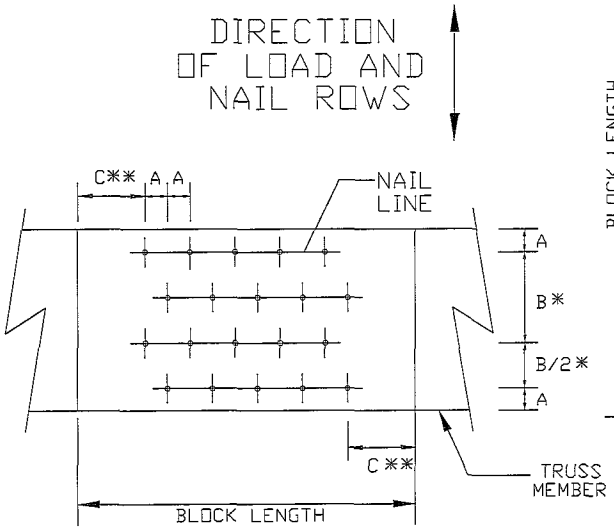

LOAD APPLIED PERPENDICULAR TO GRAIN

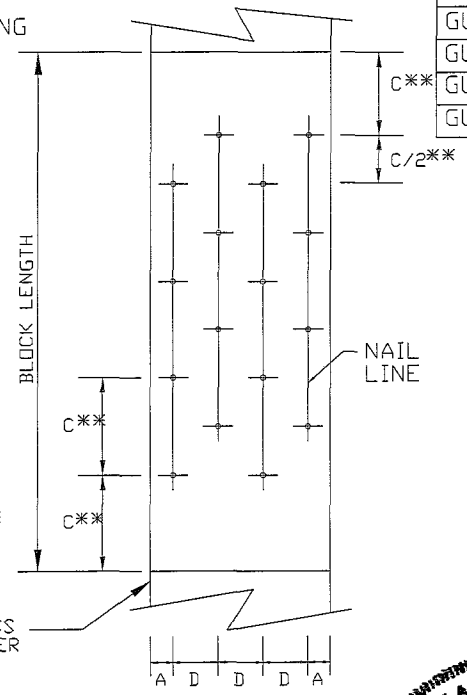

LOAD APPLIED PARALLEL TO GRAIN

ITW Building Components Group Inc.

Earth City MO 63045

WARNING READ AND FOLLOW ALL NOTES ON THIS SHEET
Trusses require extreme care in fabricating, handling, shipping, installing and bracing. Refer to and follow BCSI (Building Component Safety Information, by TPI and WTCA) for safety practices prior to performing these functions. Installers shall provide temporary bracing per BCSI. Unless noted otherwise top chord shall have properly attached structural panels and bottom chord shall have a properly attached rigid ceiling. Locations shown for permanent lateral restraint of webs shall have bracing installed per BCSI sections B3 & B7 See this job's general notes page for more information.

IMPORTANT FURNISH COPY OF THIS DESIGN TO INSTALLATION CONTRACTOR.
ITW Building Components Group Inc. (ITWBCG) shall not be responsible for any deviation from this design, any failure to build the truss in conformance with TPI or fabricating, handling, shipping, installing & bracing of trusses. ITWBCG connector plates are made of 20/18/16GA (W,H/S/K) ASTM 653 grade 37/40/60 (K/W/H,S) galv steel Apply plates to each face of truss, positioned as shown on the design and on Joint Details.
A seal on this drawing or cover page indicates acceptance and professional engineering responsibility solely for the truss component design shown. The suitability and use of this component for any building is the responsibility of the Building Designer per ANST/TPI 1 Sec. 2.
ITW-BCG: www.itwbcg.com, TPI: www.tpinst.com WTCA: www.sbcindustry.com, ICC: www.iccsafe.org

WILLIAM H. KRICK LICENSE No. 70861 STATE OF FLORIDA PROFESSIONAL ENGINEER
Aug 28
08/28/2013

REF	NAIL SPACE
DATE	1/1/09
DRWG	CNNAILSP0109