73

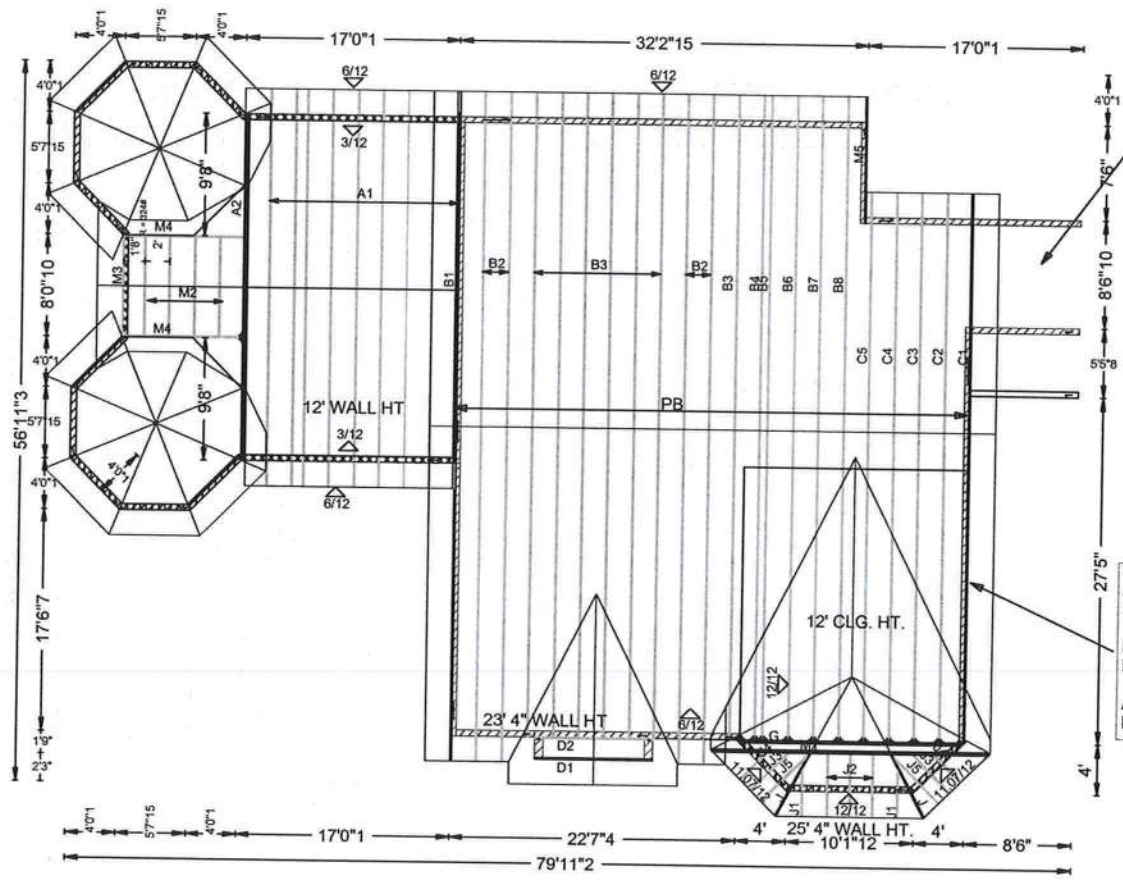

12/12 PITCH ANTICIPATED PER PLAN, BUT NO WALL HT. PROVIDED FOR BREEZEWAY...

W.B. Howland Truss Co.
P.O. Box 700
Live Oak, FL 32064
(386) 362-1235
(386) 362-7124 (Fax)

ROOF PITCH: 6/12, 12/12
CLG PITCH: 3/12
OVERHANG: 2'
LOADING: 40
WIND LOAD: 130
EXPOSURE: C
EXT WALLS: 2X6 FRAME

DATE: 7/17/2012

STUDIO CLG. HT STATED ON FLOOR PLAN AS 10'....ON ELEVATIONS APPEARS TO BE 12'. DESIGNED WITH 12' CLG.

NOTE HOWEVER THAT EXTERIOR WALL IS AT 23'4" HT.

AREAS NOT TRUSSED REQUIRE CONVENTIONAL FRAMING. (ABSENCE OF BEARING)

COLUMBIA COUNTY BUILDING DEPARTMENT
Received for Code Compliance
FILE COPY
PLANS EXAMINER

WB HOWLAND

JOB #: 7819

Job Name: STEVE BECK ADDITION
Customer: OWNER BUILDER
Designer: Lynn Bell
ADDRESS:
SALESMAN: HOUSE
: <Not Found>

JOB NO:
7819

PAGE NO:
1 OF 1

ITW Building Components Group, Inc.

1950 Marley Drive Haines City, FL 33844
Florida Engineering Certificate of Authorization Number: 0 278
Florida Certificate of Product Approval # FL1999
 Document ID:1UNX215-Z0119131454

WALTER P. FINN
LICENSE
No. 22839
STATE OF FLORIDA
PROFESSIONAL ENGINEER

07/19/2012

Truss Fabricator:	W.B. Howland
Job Identification:	7819-/STEVE BECK ADDITION /OWNER BUILDER -- Columbia County FL
Truss Count:	29
Model Code:	Florida Building Code
Truss Criteria:	FBC2010Res/TPI-2007(STD)
Engineering Software:	Alpine Software,Version 10.03.
Structural Engineer of Record:	The identity of the structural EOR did not exist as of
Address:	the seal date per section 61G15-31.003(5a) of the FAC
Minimum Design Loads:	Roof - 40.0 PSF @ 1.25 Duration
	Floor - N/A
	Wind - 130 MPH ASCE 7-10 -Closed

Notes:

1. Determination as to the suitability of these truss components for the structure is the responsibility of the building designer/engineer of record, as defined in ANSI/TPI 1
2. The drawing date shown on this index sheet must match the date shown on the individual truss component drawing.
3. As shown on attached drawings; the drawing number is preceded by: HCUSR215

Details: 14030EC1-GBLLETIN-BRCLBSUB-CNNAILSP-

Walter P. Finn
-Truss Design Engineer-

1950 Marley Drive
Haines City, FL 33844

#	Ref Description	Drawing#	Date
1	20104--A1	12201001	07/19/12
2	20105--A2	12201026	07/19/12
3	20106--B1	12201007	07/19/12
4	20107--B2	12201003	07/19/12
5	20108--B3	12201002	07/19/12
6	20109--B4	12201027	07/19/12
7	20110--B5	12201028	07/19/12
8	20111--B6	12201008	07/19/12
9	20112--B7	12201009	07/19/12
10	20113--B8	12201010	07/19/12
11	20114--C1	12201011	07/19/12
12	20115--C2	12201012	07/19/12
13	20116--C3	12201013	07/19/12
14	20117--C4	12201014	07/19/12
15	20118--C5	12201015	07/19/12
16	20119--D1	12201016	07/19/12
17	20120--D2	12201017	07/19/12
18	20121--G	12201029	07/19/12
19	20122--J	12201023	07/19/12
20	20123--J1	12201022	07/19/12
21	20124--J2	12201018	07/19/12
22	20125--J3	12201019	07/19/12
23	20126--J4	12201020	07/19/12
24	20127--J5	12201021	07/19/12
25	20128--M1	12201024	07/19/12
26	20129--M2	12201004	07/19/12
27	20130--M4	12201005	07/19/12
28	20131--M5	12201025	07/19/12
29	20132--M3	12201006	07/19/12

ALPINE

COLUMBIA COUNTY BUILDING DEPARTMENT
Received for
FILE COPY
Code Compliance
PLANS EXAMINER

(7819-/STEVE BECK ADDITION /OWNER BUILDER -- Columbia County, FL - A1)

THIS DWG PREPARED FROM COMPUTER INPUT (LOADS & DIMENSIONS) SUBMITTED BY TRUSS MFR.

Top chord 2x4 SP_#2_N__12A
Bot chord 2x4 SP_SS_12A
Webs 2x4 SP_#2_N__12A

Lumber grades designated with "12A" use design values approved 1/5/2012 by ALSC.

Calculated horizontal deflection is 0.20" due to live load and 0.31" due to dead load.

The overall height of this truss excluding overhang is 7-2-5.

MWFRS loads based on trusses located at least 7.64 ft. from roof edge.

130 mph wind, 15.27 ft mean hgt, ASCE 7-10, CLOSED bldg, not located within 9.00 ft from roof edge, RISK CAT II, EXP C, wind TC DL=5.0 psf, wind BC DL=5.0 psf. GCpi(+/-)=0.18

Wind loads and reactions based on MWFRS with additional C&C member design.

Bottom chord checked for 10.00 psf non-concurrent live load.

Deflection meets L/240 live and L/180 total load. Creep increase factor for dead load is 1.50.

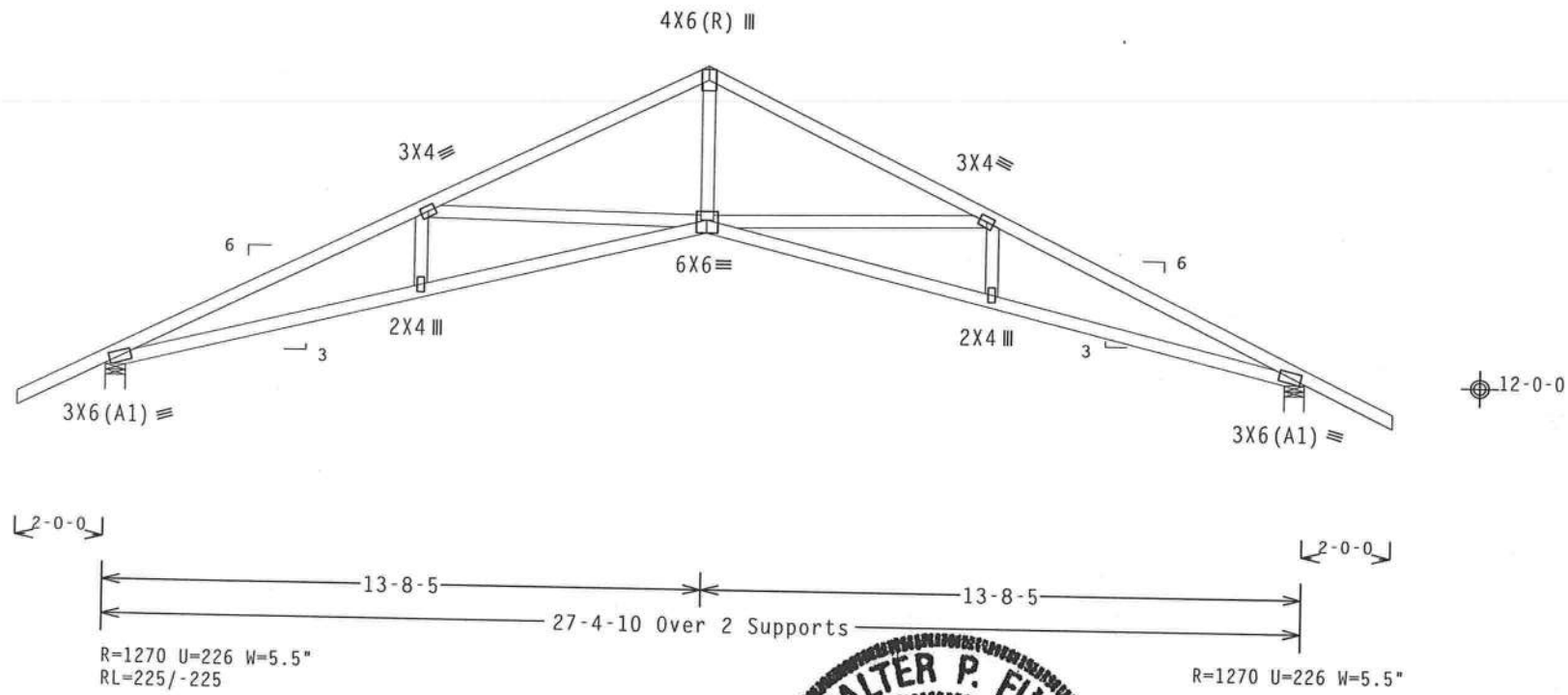

PLT TYP. Wave

Design Crit: FBC2010Res/TPI-2007(STD) FT/RT=20%(0%)/10(0) 10.03.11 0300.21 QTY 9

FL/-/5/-/-/R/-

Scale =.25"/Ft.

ALPINE
ITW Building Components Group Inc.
Haines City, FL 33844
FL COA #0 278

WARNING READ AND FOLLOW ALL NOTES ON THIS SHEET!
IMPORTANT FURNISH THIS DESIGN TO ALL CONTRACTORS INCLUDING INSTALLERS.

Trusses require extreme care in fabricating, handling, shipping, installing and bracing. Refer to and follow the latest edition of BCSI (Building Component Safety Information, by TPI and WTCA) for safety practices prior to performing these functions. Installers shall provide temporary bracing per BCSI. Unless noted otherwise, top chord shall have properly attached structural sheathing and bottom chord shall have a properly attached rigid ceiling. Locations shown for permanent lateral restraint of webs shall have bracing installed per BCSI sections B3, B7 or B10, as applicable.

ITW Building Components Group Inc. (ITWBCG) shall not be responsible for any deviation from this design, any failure to build the truss in conformance with ANSI/TPI 1, or for handling, shipping, installing and bracing of trusses. Apply plates to each face of truss and position as shown above and on the Joint Details, unless noted otherwise. Refer to drawings 160A-Z for standard plate positions. A seal on this drawing or cover page listing this drawing, indicates acceptance of professional engineering responsibility solely for the design shown. The suitability and use of this design for any structure is the responsibility of the Building Designer per ANSI/TPI 1 Sec.2. For more information see: This job's general notes page; ITW-BCG: www.itwbcg.com; TPI: www.tpinst.org; WTCA: www.sbcindustry.com; ICC: www.iccsafe.org

WALTER P. FINN LICENSE No.22839 STATE OF FLORIDA PROFESSIONAL ENGINEER

07/19/2012

TC LL	20.0 PSF	REF	R215-- 20104
TC DL	10.0 PSF	DATE	07/19/12
BC DL	10.0 PSF	DRW	HCUSR215 12201001
BC LL	0.0 PSF	HC-ENG	DR/WPF
TOT.LD.	40.0 PSF	SEQN-	250238
DUR.FAC.	1.25	FROM	CDM
SPACING	24.0"	JREF-	1UNX215_Z01

(7819-/STEVE BECK ADDITION /OWNER BUILDER -- Columbia County, FL - A2)

THIS DWG PREPARED FROM COMPUTER INPUT (LOADS & DIMENSIONS) SUBMITTED BY TRUSS MFR.

Top chord 2x4 SP_#2_N__12A
Bot chord 2x6 SP_SS_12A
Webs 2x4 SP_#2_N__12A :W5 2x6 SP_#2_N_12A:

Lumber grades designated with "12A" use design values approved 1/5/2012 by ALSC.

Special loads
------(Lumber Dur.Fac.=1.25 / Plate Dur.Fac.=1.25)
TC- From 62 plf at 0.00 to 62 plf at 13.69
TC- From 62 plf at 13.69 to 62 plf at 27.39
BC- From 21 plf at 0.00 to 21 plf at 13.69
BC- From 21 plf at 13.69 to 21 plf at 27.39
BC- 1040.00 lb Conc. Load at 9.67,17.72

Calculated horizontal deflection is 0.18" due to live load and 0.29" due to dead load.

Deflection meets L/240 live and L/180 total load. Creep increase factor for dead load is 1.50.

2 COMPLETE TRUSSES REQUIRED

Nail Schedule:0.131"x3", min. nails
Top Chord: 1 Row @12.00" o.c.
Bot Chord: 1 Row @12.00" o.c.
Webs : 1 Row @ 4" o.c.
Use equal spacing between rows and stagger nails in each row to avoid splitting.

130 mph wind, 15.77 ft mean hgt, ASCE 7-10, CLOSED bldg, not located within 4.50 ft from roof edge, RISK CAT II, EXP C, wind TC DL=5.0 psf, wind BC DL=5.0 psf. GCpi(+/-)=0.18

Wind loads and reactions based on MWFRS with additional C&C member design.

Bottom chord checked for 10.00 psf non-concurrent live load.

The overall height of this truss excluding overhang is 7-2-5.

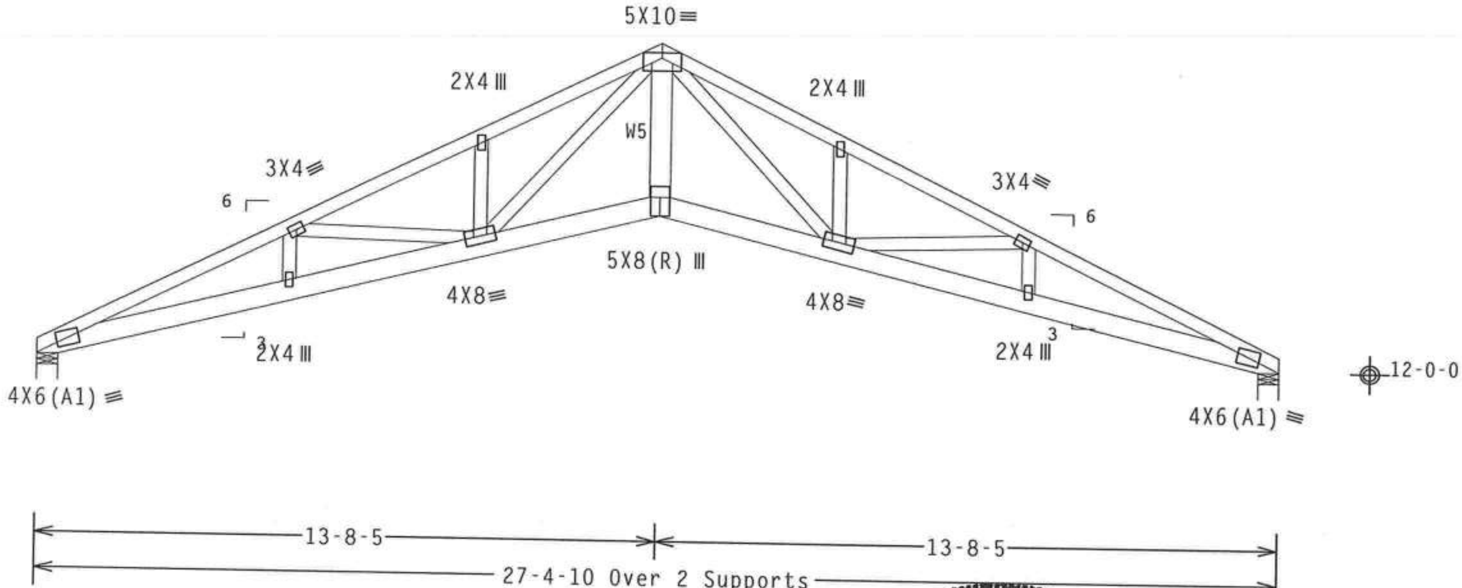

R=2176 U=447 W=5.5"
RL=174/-174

R=2176 U=447 W=5.5"

PLT TYP. Wave

Design Crit: FBC2010Res/TPI-2007(STD)
FT/RT=20%(0%)/10(0) 10.03. QTY:

ALPINE
ITW Building Components Group Inc.
Haines City, FL 33844
FL COA #0 278

WARNING READ AND FOLLOW ALL NOTES ON THIS SHEET!
IMPORTANT FURNISH THIS DESIGN TO ALL CONTRACTORS INCLUDING INSTALLERS.

Trusses require extreme care in fabricating, handling, shipping, installing and bracing. Refer to and follow the latest edition of BCSI (Building Component Safety Information, by TPI and WTCA) for safety practices prior to performing these functions. Installers shall provide temporary bracing per BCSI. Unless noted otherwise, top chord shall have properly attached structural sheathing and bottom chord shall have a properly attached rigid ceiling. Locations shown for permanent lateral restraint of webs shall have bracing installed per BCSI sections B3, B7 or B10, as applicable.

ITW Building Components Group Inc. (ITWBCG) shall not be responsible for any deviation from this drawing, any failure to build the truss in conformance with ANSI/TPI 1, or for handling, shipping, installation & bracing of trusses. Apply plates to each face of truss and position as shown above and on the Joint Details, unless noted otherwise. Refer to drawings 160A-Z for standard plate positions. A seal on this drawing or cover page listing this drawing, indicates acceptance of professional engineering responsibility solely for the design shown. The suitability and use of this design for any structure is the responsibility of the Building Designer per ANSI/TPI 1 Sec.2. For more information see: This job's general notes page: ITW-BCG: www.itwbcg.com; TPI: www.tpinst.org; WTCA: www.sbcindustry.com; ICC: www.iccsafe.org

WALTER P. FINN LICENSE No. 22839 STATE OF FLORIDA PROFESSIONAL ENGINEER
07/19/2012

FL/-/5/-/-/R/-	
TC LL	20.0 PSF
TC DL	10.0 PSF
BC DL	10.0 PSF
BC LL	0.0 PSF
TOT.LD.	40.0 PSF
DUR.FAC.	1.25
SPACING	24.0"

Scale =.25"/Ft.	
REF	R215-- 20105
DATE	07/19/12
DRW	HCUSR215 12201026
HC-ENG	DR/WPF
SEQN-	345303
FROM	CDM
JREF-	1UNX215_Z01

(7819-/STEVE BECK ADDITION /OWNER BUILDER -- Columbia County, FL - B1)

THIS DWG PREPARED FROM COMPUTER INPUT (LOADS & DIMENSIONS) SUBMITTED BY TRUSS MFR.

Top chord 2x4 SP_#2_N__12A
Bot chord 2x4 SP_#2_N__12A
Webs 2x4 SP_#2_N__12A

Lumber grades designated with "12A" use design values approved 1/5/2012 by ALSC.

Gable end supports 8" max rake overhang.

(a) Continuous lateral bracing equally spaced on member.

Bottom chord checked for 10.00 psf non-concurrent live load.

WARNING: Furnish a copy of this DWG to the installation contractor. Special care must be taken during handling, shipping and installation of trusses. See "WARNING" note below.

130 mph wind, 28.82 ft mean hgt, ASCE 7-10, CLOSED bldg, not located within 6.50 ft from roof edge, RISK CAT II, EXP C, wind TC DL=5.0 psf, wind BC DL=5.0 psf. GCpi(+/-)=0.18

Wind loads and reactions based on MWFRS with additional C&C member design.

See DWGS A14030ENC100212 & GBLLETIN0212 for more requirements.

In lieu of structural panels use purlins to brace all flat TC @ 24" OC.

Deflection meets L/240 live and L/180 total load. Creep increase factor for dead load is 1.50.

The overall height of this truss excluding overhang is 10-8-1.

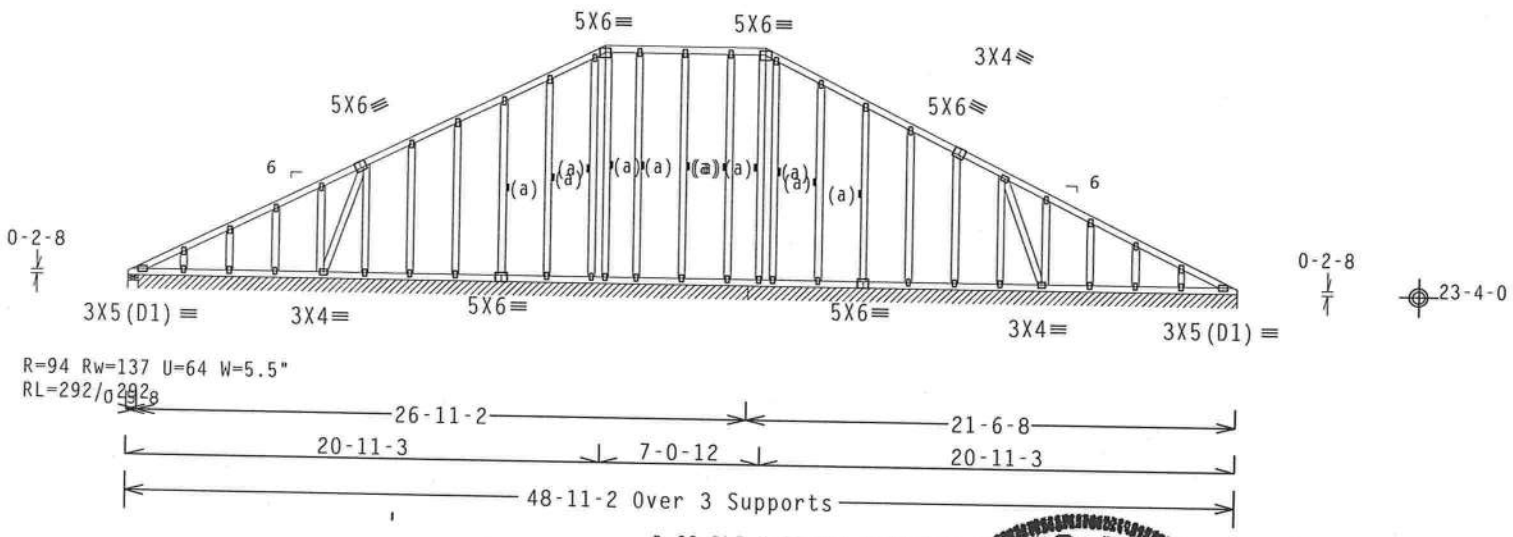

Note: All Plates Are 2X4 Except As Shown.

Design Crit: FBC2010Res/TPI-2007(STD)
FT/RT=20%(0%)/10(0)

PLT TYP. Wave

10.03.11.0208.21 QTY 1 FL/-/5/-/-/R/- Scale =.125"/Ft.

ALPINE
ITW Building Components Group Inc.
Haines City, FL 33844
FL COA #0 278

WARNING READ AND FOLLOW ALL NOTES ON THIS SHEET!
IMPORTANT FURNISH THIS DESIGN TO ALL CONTRACTORS INCLUDING INSTALLERS.

Trusses require extreme care in fabricating, handling, shipping, installing and bracing. Refer to and follow the latest edition of BCSI (Building Component Safety Information, by TPI and WTCA) for safety practices prior to performing these functions. Installers shall provide temporary bracing per BCSI. Unless noted otherwise, top chord shall have properly attached structural sheathing and bottom chord shall have a properly attached rigid ceiling. Locations shown for permanent lateral restraint of webs shall have bracing installed per BCSI sections B3, B7 or B10, as applicable.

ITW Building Components Group Inc. (ITWBCG) shall not be responsible for any deviation from this dwg or any failure to build the truss in conformance with ANSI/TPI 1, or for handling, shipping, installation and bracing of trusses. Apply plates to each face of truss and position as shown above and on the Joint Details, unless noted otherwise. Refer to drawings 160A-Z for standard plate positions. A seal on this drawing or cover page listing this drawing, indicates acceptance of professional engineering responsibility solely for the design shown. The suitability and use of this design for any structure is the responsibility of the Building Designer per ANSI/TPI 1 Sec.2. For more information see: This job's general notes page; ITW-BCG: www.itwbcg.com; TPI: www.tpinst.org; WTCA: www.sbcindustry.com; ICC: www.iccsafe.org

WALTER P. FINN LICENSE No.22839 STATE OF FLORIDA PROFESSIONAL ENGINEER

07/19/2012

TC LL	20.0 PSF	REF	R215-- 20106
TC DL	10.0 PSF	DATE	07/19/12
BC DL	10.0 PSF	DRW	HCUSR215 12201007
BC LL	0.0 PSF	HC-ENG	DR/WPF
TOT.LD.	40.0 PSF	SEQN-	345311
DUR.FAC.	1.25	FROM	LRB
SPACING	24.0"	JREF-	1UNX215_Z01

(7819-/STEVE BECK ADDITION /OWNER BUILDER -- Columbia County, FL - B2)

THIS DWG PREPARED FROM COMPUTER INPUT (LOADS & DIMENSIONS) SUBMITTED BY TRUSS MFR.

Top chord 2x4 SP_SS_12A :T4 2x4 SP_#2_N__12A:
Bot chord 2x4 SP_SS_12A
Webs 2x4 SP_#2_N__12A
:Lt Wedge 2x4 SP_#2_N__12A::Rt Wedge 2x4 SP_#2_N__12A:

Lumber grades designated with "12A" use design values approved 1/5/2012 by ALSC.

(a) Continuous lateral bracing equally spaced on member.

In lieu of structural panels use purlins to brace all flat TC @ 24" OC.

Bottom chord checked for 10.00 psf non-concurrent live load.

WARNING: Furnish a copy of this DWG to the installation contractor. Special care must be taken during handling, shipping and installation of trusses. See "WARNING" note below.

130 mph wind, 28.60 ft mean hgt, ASCE 7-10, CLOSED bldg, not located within 6.50 ft from roof edge, RISK CAT II, EXP C, wind TC DL=5.0 psf, wind BC DL=5.0 psf. GCpi(+/-)=0.18

Wind loads and reactions based on MWFRS with additional C&C member design.

Calculated horizontal deflection is 0.13" due to live load and 0.17" due to dead load.

Truss passed check for 20 psf additional bottom chord live load in areas with 42"-high x 24"-wide clearance.

Deflection meets L/240 live and L/180 total load. Creep increase factor for dead load is 1.50.

The overall height of this truss excluding overhang is 11-0-0.

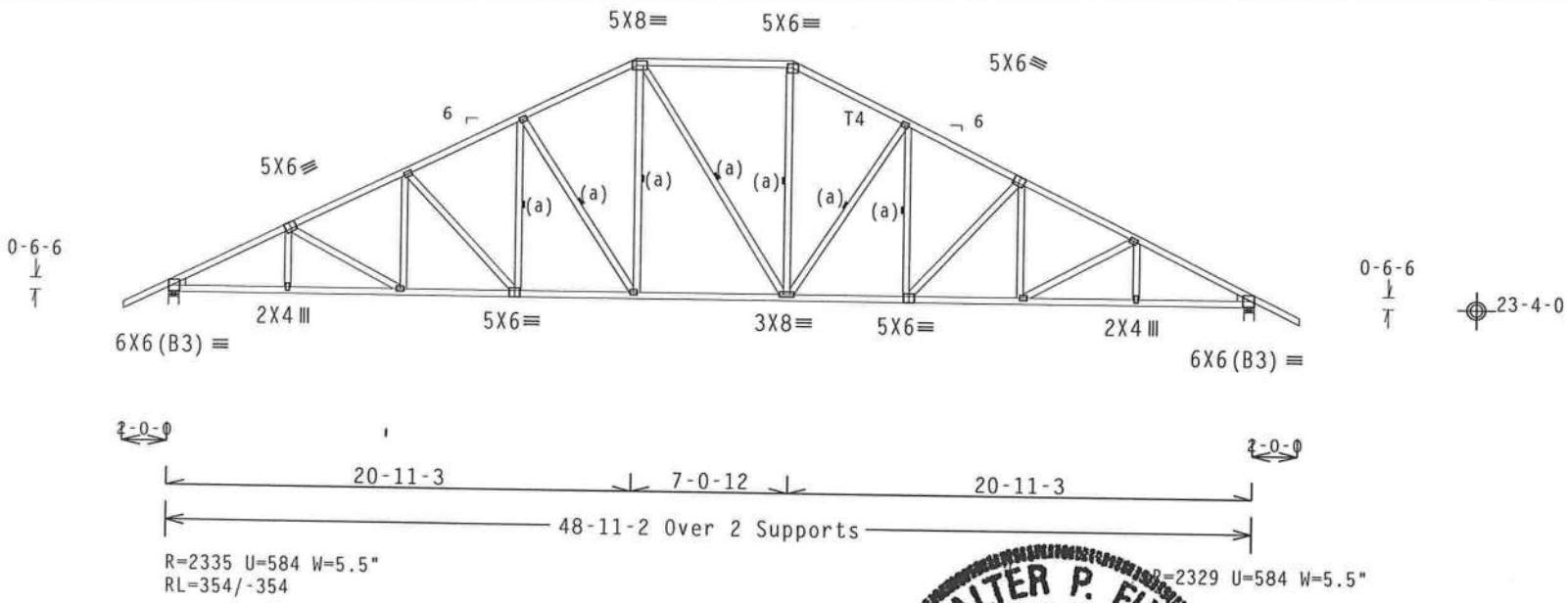

Note: All Plates Are 3X4 Except As Shown.

Design Crit: FBC2010Res/TPI-2007(STD) 10.03 11.0209.21 QTY 4 FL/-/5/-/-/R/- Scale =.125"/Ft.

PLT TYP. Wave

FT/RT=20%(0%)/10(0)

ALPINE
ITW Building Components Group Inc.
Haines City, FL 33844
FL COA #0 278

WARNING READ AND FOLLOW ALL NOTES ON THIS SHEET!
IMPORTANT FURNISH THIS DESIGN TO ALL CONTRACTORS INCLUDING INSTALLERS.

Trusses require extreme care in fabricating, handling, shipping, installing and bracing. Refer to, and follow the latest edition of BCSI (Building Component Safety Information, by TPI and WTCA) for safety practices prior to performing these functions. Installers shall provide temporary bracing per BCSI. Unless noted otherwise, top chord shall have properly attached structural sheathing and bottom chord shall have a properly attached rigid ceiling. Locations shown for permanent lateral restraint of webs shall have bracing installed per BCSI sections B3, B7 or B10, as applicable.

ITW Building Components Group Inc. (ITWBCG) shall not be responsible for any deviation from this dwg, any failure to build the truss in conformance with ANSI/TPI 1, or for handling, shipping, installation and bracing of trusses. Apply plates to each face of truss and position as shown above and on the Joint Details, unless noted otherwise. Refer to drawings 160A-2 for standard plate positions. A seal on this drawing or cover page listing this drawing, indicates acceptance of professional engineering responsibility solely for the design shown. The suitability and use of this design for any structure is the responsibility of the Building Designer per ANSI/TPI 1 Sec.2. For more information see: This job's general notes page; ITW-BCG: www.itwbcg.com; TPI: www.tpinst.org; WTCA: www.sbcindustry.com; ICC: www.iccsafe.org

WALTER P. FINN LICENSE No.22839 STATE OF FLORIDA PROFESSIONAL ENGINEER

07/19/2012

TC LL	20.0 PSF	REF	R215-- 20107
TC DL	10.0 PSF	DATE	07/19/12
BC DL	10.0 PSF	DRW	HCUSR215 12201003
BC LL	0.0 PSF	HC-ENG	DR/WPF
TOT.LD.	40.0 PSF	SEQN-	251011
DUR.FAC.	1.25	FROM	LRB
SPACING	24.0"	JREF-	1UNX215_Z01

(7819-/STEVE BECK ADDITION /OWNER BUILDER -- Columbia County, FL - B3)

THIS DWG PREPARED FROM COMPUTER INPUT (LOADS & DIMENSIONS) SUBMITTED BY TRUSS MFR.

Top chord 2x4 SP_SS_12A :T2, T4 2x4 SP_#2_N__12A:
Bot chord 2x4 SP_SS_12A
Webs 2x4 SP_#2_N__12A
:Lt Wedge 2x4 SP_#2_N__12A::Rt Wedge 2x4 SP_#2_N__12A:

Lumber grades designated with "12A" use design values approved 1/5/2012 by ALSC.

(a) Continuous lateral bracing equally spaced on member.

In lieu of structural panels use purlins to brace all flat TC @ 24" OC.

Bottom chord checked for 10.00 psf non-concurrent live load.

WARNING: Furnish a copy of this DWG to the installation contractor. Special care must be taken during handling, shipping and installation of trusses. See "WARNING" note below.

MWFRS loads based on trusses located at least 14.30 ft. from roof edge.

130 mph wind, 28.60 ft mean hgt, ASCE 7-10, CLOSED bldg, not located within 13.00 ft from roof edge, RISK CAT II, EXP C, wind TC DL=5.0 psf, wind BC DL=5.0 psf. GCpi(+/-)=0.18

Wind loads and reactions based on MWFRS with additional C&C member design.

Calculated horizontal deflection is 0.13" due to live load and 0.17" due to dead load.

Truss passed check for 20 psf additional bottom chord live load in areas with 42"-high x 24"-wide clearance.

Deflection meets L/240 live and L/180 total load. Creep increase factor for dead load is 1.50.

The overall height of this truss excluding overhang is 11-0-0.

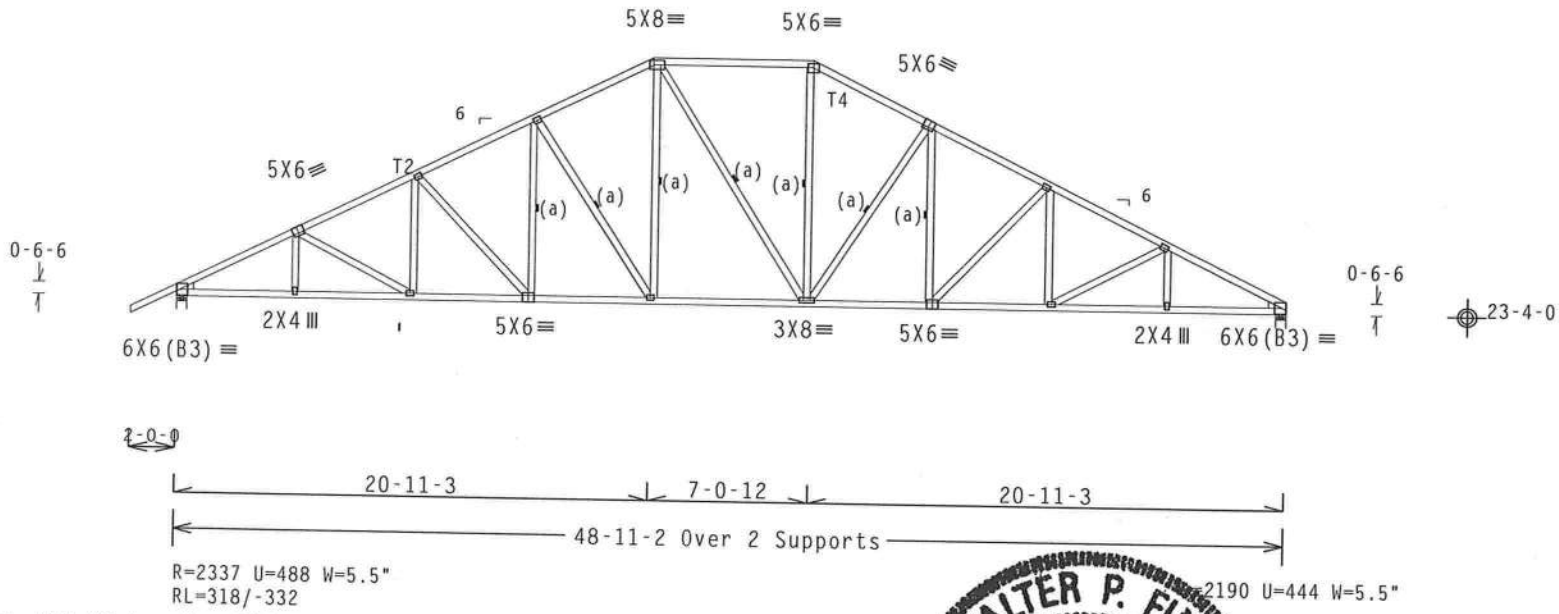

Note: All Plates Are 3X4 Except As Shown.

Design Crit: FBC2010Res/TPI-2007(STD)

PLT TYP. Wave

FT/RT=20%(0%)/10(0)

10.03.11.0209.21 QTY 7 FL/-/5/-/-/R/- Scale =.125"/Ft.

ALPINE
ITW Building Components Group Inc.
Haines City, FL 33844
FL COA #0 278

WARNING READ AND FOLLOW ALL NOTES ON THIS SHEET!
IMPORTANT FURNISH THIS DESIGN TO ALL CONTRACTORS INCLUDING INSTALLERS.

Trusses require extreme care in fabricating, handling, shipping, installing and bracing. Refer to and follow the latest edition of BCSI (Building Component Safety Information, by TPI and WTCA) for safety practices prior to performing these functions. Installers shall provide temporary bracing per BCSI. Unless noted otherwise, top chord shall have properly attached structural sheathing and bottom chord shall have a properly attached rigid ceiling. Locations shown for permanent lateral restraint of webs shall have bracing installed per BCSI sections B3, B7 or B10, as applicable.

ITW Building Components Group Inc. (ITWBCG) shall not be responsible for any deviation from this design, any failure to build the truss in conformance with ANSI/TPI 1, or for handling, shipping, installing and bracing of trusses. Apply plates to each face of truss and position as shown above and on the Joint Details, unless noted otherwise. Refer to drawings 160A-Z for standard plate positions. A seal on this drawing or cover page listing this drawing, indicates acceptance of professional engineering responsibility solely for the design shown. The suitability and use of this design for any structure is the responsibility of the Building Designer per ANSI/TPI 1 Sec.2. For more information see: This job's general notes page; ITW-BCG: www.itwbcg.com; TPI: www.tpinst.org; WTCA: www.sbcindustry.com; ICC: www.iccsafe.org

WALTER P. FINN LICENSE No.22839 STATE OF FLORIDA PROFESSIONAL ENGINEER

07/19/2012

TC LL	20.0 PSF	REF	R215-- 20108
TC DL	10.0 PSF	DATE	07/19/12
BC DL	10.0 PSF	DRW	HCUSR215 12201002
BC LL	0.0 PSF	HC-ENG	DR/WPF
TOT.LD.	40.0 PSF	SEQN-	251006
DUR.FAC.	1.25	FROM	LRB
SPACING	24.0"	JREF-	1UNX215_Z01

(7819-/STEVE BECK ADDITION /OWNER BUILDER -- Columbia County, FL - B4)

THIS DWG PREPARED FROM COMPUTER INPUT (LOADS & DIMENSIONS) SUBMITTED BY TRUSS MFR.

Top chord 2x4 SP_SS_12A :T2, T3, T6 2x4 SP_#2_N__12A:
Bot chord 2x4 SP_SS_12A
Webs 2x4 SP_#2_N__12A :W18 2x4 SP_SS_12A:
:Lt Wedge 2x4 SP_#2_N__12A:

Lumber grades designated with "12A" use design values approved 1/5/2012 by ALSC.

Calculated horizontal deflection is 0.12" due to live load and 0.19" due to dead load.

H = recommended connection based on manufacturer tested capacities and calculations. Conditions may exist that require different connections than indicated. Refer to manufacturer publication for additional information.

(H1) = (J) Hanger not calculated (2)2x8 SP_SS_12A supporting member.

In lieu of structural panels use purlins to brace all flat TC @ 24" OC.

Deflection meets L/240 live and L/180 total load. Creep increase factor for dead load is 1.50.

WARNING: Furnish a copy of this DWG to the installation contractor. Special care must be taken during handling, shipping and installation of trusses. See "WARNING" note below.

(I) - plates so marked were sized using a Fabrication Tolerance of 0% and a Rotational Tolerance of 0 degrees.

130 mph wind, 28.60 ft mean hgt, ASCE 7-10, CLOSED bldg, not located within 13.00 ft from roof edge, RISK CAT II, EXP C, wind TC DL=5.0 psf, wind BC DL=5.0 psf, GCpi(+/-)=0.18

Wind loads and reactions based on MWFRS with additional C&C member design.

Hanger specified assumes connection to supporting chord is located a minimum of five times the depth of the supporting chord from any unsupported end, unless unsupported chord end has 85% plating coverage.

(a) Continuous lateral bracing equally spaced on member.

Bottom chord checked for 10.00 psf non-concurrent live load.

Calculated vertical deflection is 0.43" due to live load and 0.68" due to dead load at X = 33-3-15.

The overall height of this truss excluding overhang is 11-0-0.

MWFRS loads based on trusses located at least 14.30 ft. from roof edge.

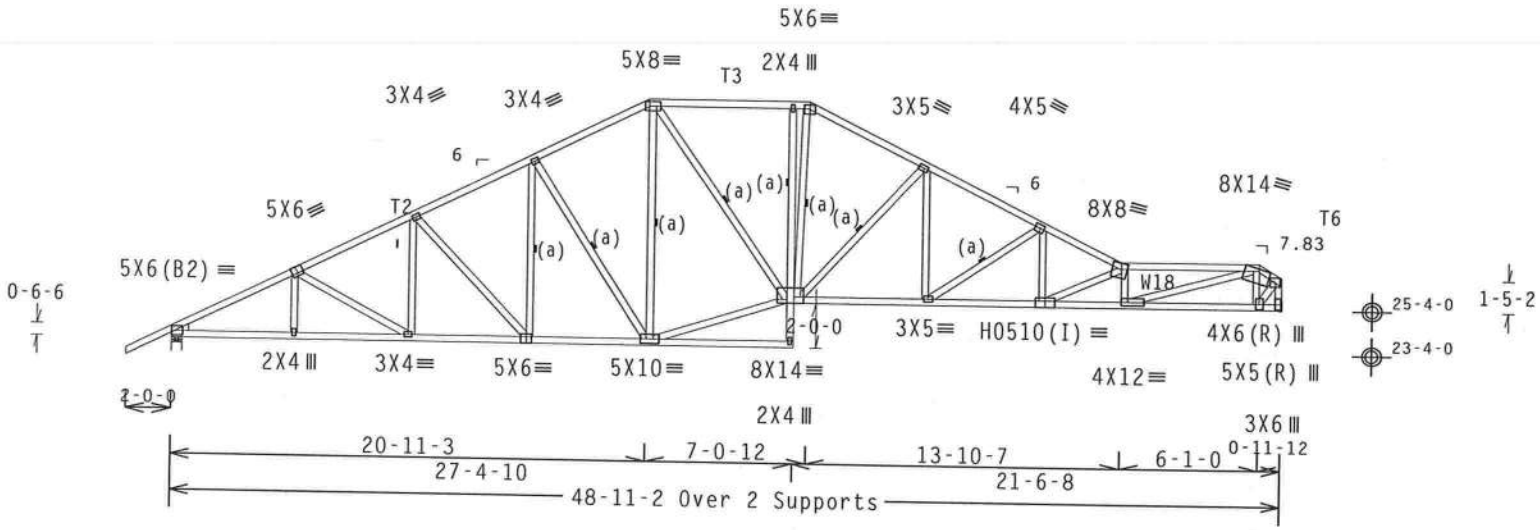

R=2155 U=485 W=5.5"
RL=300/-267

R=2010 U=450 H=ITW (KC) ATH29
Supported Member Face: (4) 0.148"x1.5" nails
Supporting Member Face: (8) 0.128"x3" nails
Supporting Member Top: (4) 0.128"x3" nails
Supporting Member: (2) 2x8 SP_SS_12A

PLT TYP. 20 Gauge HS,Wave

Design Crit: FBC2010Res/TPI-2007(STD)
FT/RT=20%(0%)/10(0)

10.03.1

QTY:

FL/-/5/-/-/R/-

Scale =.125"/Ft.

ALPINE
ITW Building Components Group Inc.
Haines City, FL 33844
FL COA #0 278

WARNING READ AND FOLLOW ALL NOTES ON THIS SHEET!
IMPORTANT FURNISH THIS DESIGN TO ALL CONTRACTORS INCLUDING INSTALLERS.

Trusses require extreme care in fabricating, handling, shipping, installing and bracing. Refer to and follow the latest edition of BCSI (Building Component Safety Information, by TPI and WTCA) for safety practices prior to performing these functions. Installers shall provide temporary bracing per BCSI. Unless noted otherwise, top chord shall have properly attached structural sheathing and bottom chord shall have a properly attached rigid ceiling. Locations shown for permanent lateral restraint of webs shall have bracing installed per BCSI sections B3, B7 or B10, as applicable.

ITW Building Components Group Inc. (ITWBCG) shall not be responsible for any deviation from this design, any failure to build the truss in conformance with ANSI/TPI 1, or for handling, shipping, installation and bracing of trusses. Apply plates to each face of truss and position as shown above and on the Joint Details, unless noted otherwise. Refer to drawings 160A-Z for standard plate positions. A seal on this drawing or cover page listing this drawing, indicates acceptance of professional engineering responsibility solely for the design shown. The suitability and use of this design for any structure is the responsibility of the Building Designer per ANSI/TPI 1 Sec.2. For more information see: This job's general notes page; ITW-BCG: www.itwbcg.com; TPI: www.tpinst.org; WTCA: www.sbcindustry.com; ICC: www.iccsafe.org

WALTER P. FINN
LICENSE
No.22839
STATE OF FLORIDA
PROFESSIONAL ENGINEER
07/19/2012

TC LL	20.0 PSF	REF R215-- 20109
TC DL	10.0 PSF	DATE 07/19/12
BC DL	10.0 PSF	DRW HCUSR215 12201027
BC LL	0.0 PSF	HC-ENG DR/WPF
TOT.LD.	40.0 PSF	SEQN- 251019
DUR.FAC.	1.25	FROM LRB
SPACING	24.0"	JREF- 1UNX215_Z01

(7819-/STEVE BECK ADDITION /OWNER BUILDER -- Columbia County, FL - B5)

THIS DWG PREPARED FROM COMPUTER INPUT (LOADS & DIMENSIONS) SUBMITTED BY TRUSS MFR.

Top chord 2x4 SP_SS_12A :T2, T3, T6 2x4 SP_#2_N__12A:
Bot chord 2x4 SP_SS_12A
Webs 2x4 SP_#2_N__12A
:Lt Wedge 2x4 SP_#2_N__12A:

Lumber grades designated with "12A" use design values approved 1/5/2012 by ALSC.

Calculated horizontal deflection is 0.11" due to live load and 0.18" due to dead load.

Hanger specified assumes connection to supporting chord is located a minimum of five times the depth of the supporting chord from any unsupported end, unless unsupported chord end has 85% plating coverage.

(a) Continuous lateral bracing equally spaced on member.

In lieu of structural panels use purlins to brace all flat TC @ 24" OC.

Deflection meets L/240 live and L/180 total load. Creep increase factor for dead load is 1.50.

The overall height of this truss excluding overhang is 11-0-0.

130 mph wind, 28.60 ft mean hgt, ASCE 7-10, CLOSED bldg, not located within 13.00 ft from roof edge, RISK CAT II, EXP C, wind TC DL=5.0 psf, wind BC DL=5.0 psf. GCpi(+/-)=0.18

Wind loads and reactions based on MWFRS with additional C&C member design.

H = recommended connection based on manufacturer tested capacities and calculations. Conditions may exist that require different connections than indicated. Refer to manufacturer publication for additional information.

(H1) = (J) Hanger not calculated (2)2x8 SP_SS_12A supporting member.

Bottom chord checked for 10.00 psf non-concurrent live load.

WARNING: Furnish a copy of this DWG to the installation contractor. Special care must be taken during handling, shipping and installation of trusses. See "WARNING" note below.

MWFRS loads based on trusses located at least 14.30 ft. from roof edge.

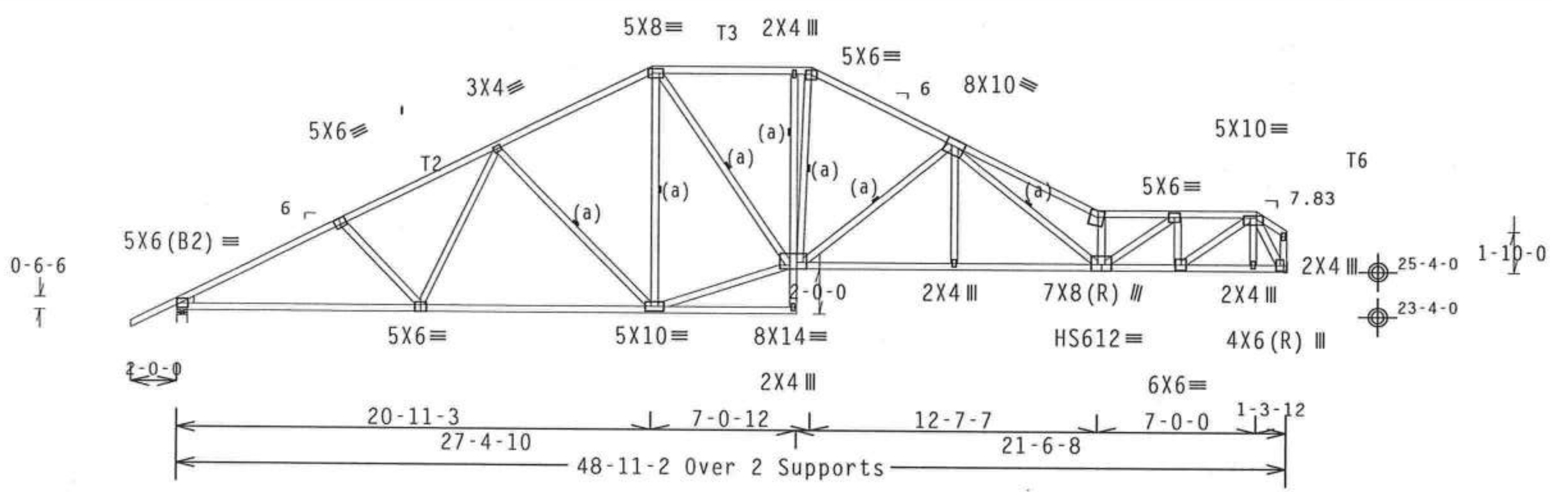

R=2010 U=452 H=ITW (KC) ATH29
Supported Member Face: (4) 0.148"x1.5" nails
Supporting Member Face: (8) 0.128"x3" nails
Supporting Member Top: (4) 0.128"x3" nails
Supporting Member: (2) 2x8 SP_SS_12A

R=2155 U=485 W=5.5"
RL=298/-258

PLT TYP. 20 Gauge HS,Wave

Design Crit: FBC2010Res/TPI-2007(STD)
FT/RT=20%(0%)/10(0)

10.03.11.0209.21 QTY:1 FL/-/5/-/-/R/- Scale =.125"/Ft.

ALPINE
ITW Building Components Group Inc.
Haines City, FL 33844
FL COA #0 278

WARNING READ AND FOLLOW ALL NOTES ON THIS SHEET!
IMPORTANT FURNISH THIS DESIGN TO ALL CONTRACTORS INCLUDING INSTALLERS.

Trusses require extreme care in fabricating, handling, shipping, installing and bracing. Refer to and follow the latest edition of BCSI (Building Component Safety Information, by TPI and WTCA) for safety practices prior to performing these functions. Installers shall provide temporary bracing per BCSI. Unless noted otherwise, top chord shall have properly attached structural sheathing and bottom chord shall have a properly attached rigid ceiling. Locations shown for permanent lateral restraint of webs shall have bracing installed per BCSI sections B3, B7 or B10, as applicable.

ITW Building Components Group Inc. (ITWBCG) shall not be responsible for any deviation from this design, any failure to build the truss in conformance with ANSI/TPI 1, or for handling, shipping, installation & bracing of trusses. Apply plates to each face of truss and position as shown above and on the Joint Details, unless noted otherwise. Refer to drawings 160A-Z for standard plate positions. A seal on this drawing or cover page listing this drawing, indicates acceptance of professional engineering responsibility solely for the design shown. The suitability and use of this design for any structure is the responsibility of the Building Designer per ANSI/TPI 1 Sec.2. For more information see: This job's general notes page: ITW-BCG: www.itwbcg.com; TPI: www.tpinst.org; WTCA: www.sbcindustry.com; ICC: www.iccsafe.org

WALTER P. FINN LICENSE No. 22839 STATE OF FLORIDA PROFESSIONAL ENGINEER

07/19/2012

TC LL	20.0 PSF	REF R215-- 20110
TC DL	10.0 PSF	DATE 07/19/12
BC DL	10.0 PSF	DRW HCUSR215 12201028
BC LL	0.0 PSF	HC-ENG DR/WPF
TOT.LD.	40.0 PSF	SEQN- 251025
DUR.FAC.	1.25	FROM LRB
SPACING	24.0"	JREF- 1UNX215_Z01

(7819-/STEVE BECK ADDITION /OWNER BUILDER -- Columbia County, FL - B6)

THIS DWG PREPARED FROM COMPUTER INPUT (LOADS & DIMENSIONS) SUBMITTED BY TRUSS MFR.

Top chord 2x4 SP_SS_12A :T2, T6 2x4 SP_#2_N__12A:
Bot chord 2x4 SP_SS_12A
Webs 2x4 SP_#2_N__12A
:Lt Wedge 2x4 SP_#2_N__12A:

Lumber grades designated with "12A" use design values approved 1/5/2012 by ALSC.

Calculated horizontal deflection is 0.10" due to live load and 0.16" due to dead load.

H - recommended connection based on manufacturer tested capacities and calculations. Conditions may exist that require different connections than indicated. Refer to manufacturer publication for additional information.

(H1) - (J) Hanger not calculated (2)2x8 SP_SS_12A supporting member.

In lieu of structural panels use purlins to brace all flat TC @ 24" OC.

Deflection meets L/240 live and L/180 total load. Creep increase factor for dead load is 1.50.

The overall height of this truss excluding overhang is 11-0-0.

130 mph wind, 28.60 ft mean hgt, ASCE 7-10, CLOSED bldg, not located within 13.00 ft from roof edge, RISK CAT II, EXP C, wind TC DL=5.0 psf, wind BC DL=5.0 psf. GCpi(+/-)=0.18

Wind loads and reactions based on MWFRS with additional C&C member design.

Right end vertical not exposed to wind pressure.

Hanger specified assumes connection to supporting chord is located a minimum of five times the depth of the supporting chord from any unsupported end, unless unsupported chord end has 85% plating coverage.

(a) Continuous lateral bracing equally spaced on member.

Bottom chord checked for 10.00 psf non-concurrent live load.

WARNING: Furnish a copy of this DWG to the installation contractor. Special care must be taken during handling, shipping and installation of trusses. See "WARNING" note below.

MWFRS loads based on trusses located at least 14.30 ft. from roof edge.

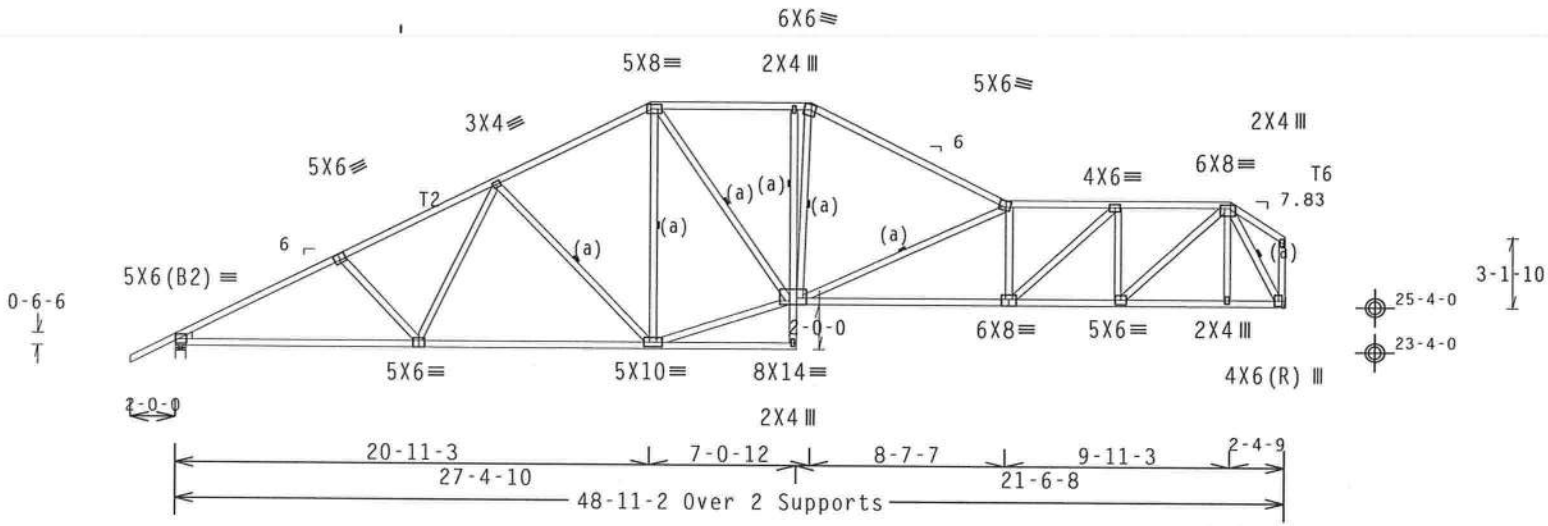

R=2155 U=482 W=5.5"
RL=292/-230

R=2012 U=457 H=ITW (KC) ATH29
Supported Member Face: (4) 0.148"x1.5" nails
Supporting Member Face: (8) 0.128"x3" nails
Supporting Member Top: (4) 0.128"x3" nails
Supporting Member: (2) 2x8 SP_SS_12A

Design Crit: FBC2010Res/TPI-2007(STD)
FT/RT=20%(0%)/10(0)

PLT TYP. Wave

10.03.02 QTY: FL/-/5/-/-/R/- Scale =.125"/Ft.

WALTER P. FINN LICENSE No 22839 STATE OF FLORIDA PROFESSIONAL ENGINEER

07/19/2012

TC LL	20.0 PSF	REF	R215-- 20111
TC DL	10.0 PSF	DATE	07/19/12
BC DL	10.0 PSF	DRW	HCUSR215 12201008
BC LL	0.0 PSF	HC-ENG DR/WPF	
TOT.LD.	40.0 PSF	SEQN-	251030
DUR.FAC.	1.25	FROM	LRB
SPACING	24.0"	JREF-	1UNX215_Z01

ALPINE
ITW Building Components Group Inc.
Haines City, FL 33844
FL COA #0 278

WARNING READ AND FOLLOW ALL NOTES ON THIS SHEET!
IMPORTANT FURNISH THIS DESIGN TO ALL CONTRACTORS INCLUDING INSTALLERS.

Trusses require extreme care in fabricating, handling, shipping, installing and bracing. Refer to and follow the latest edition of BCSI (Building Component Safety Information, by TPI and WTCA) for safety practices prior to performing these functions. Installers shall provide temporary bracing per BCSI. Unless noted otherwise, top chord shall have properly attached structural sheathing and bottom chord shall have a properly attached rigid ceiling. Locations shown for permanent lateral restraint of webs shall have bracing installed per BCSI sections B3, B7 or B10, as applicable.

ITW Building Components Group Inc. (ITWBCG) shall not be responsible for any deviation from this design, any failure to build the truss in conformance with ANSI/TPI 1, or for handling, shipping, installation and bracing of trusses. Apply plates to each face of truss and position as shown above and on the Joint Details, unless noted otherwise. Refer to drawings 160A-Z for standard plate positions. A seal on this drawing or cover page listing this drawing, indicates acceptance of professional engineering responsibility solely for the design shown. The suitability and use of this design for any structure is the responsibility of the Building Designer per ANSI/TPI 1 Sec.2. For more information see: This job's general notes page; ITW-BCG: www.itwbcg.com; TPI: www.tpinst.org; WTCA: www.sbcindustry.com; ICC: www.iccsafe.org

(7819-/STEVE BECK ADDITION /OWNER BUILDER -- Columbia County, FL - B7)

THIS DWG PREPARED FROM COMPUTER INPUT (LOADS & DIMENSIONS) SUBMITTED BY TRUSS MFR.

Top chord 2x4 SP_#2_N__12A :T1 2x4 SP_SS_12A:
Bot chord 2x4 SP_SS_12A :B4 2x4 SP_#2_N__12A:
Webs 2x4 SP_#2_N__12A
:Lt Wedge 2x4 SP_#2_N__12A:

Lumber grades designated with "12A" use design values approved 1/5/2012 by ALSC.

Calculated horizontal deflection is 0.10" due to live load and 0.16" due to dead load.

H = recommended connection based on manufacturer tested capacities and calculations. Conditions may exist that require different connections than indicated. Refer to manufacturer publication for additional information. Additional connection required to evenly distribute hanger reaction throughout all plies of supporting girder.

(a) Continuous lateral bracing equally spaced on member.

In lieu of structural panels use purlins to brace all flat TC @ 24" OC.

Deflection meets L/240 live and L/180 total load. Creep increase factor for dead load is 1.50.

The overall height of this truss excluding overhang is 11-0-0.

130 mph wind, 28.60 ft mean hgt, ASCE 7-10, CLOSED bldg, not located within 13.00 ft from roof edge, RISK CAT II, EXP C, wind TC DL=5.0 psf, wind BC DL=5.0 psf. GCpi(+/-)=0.18

Wind loads and reactions based on MWFRS with additional C&C member design.

Right end vertical not exposed to wind pressure.

Hanger specified assumes connection to supporting chord is located a minimum of five times the depth of the supporting chord from any unsupported end, unless unsupported chord end has 85% plating coverage.

(H1) = (J) Hanger not calculated (2)2x8 SP_SS_12A supporting member.

Bottom chord checked for 10.00 psf non-concurrent live load.

WARNING: Furnish a copy of this DWG to the installation contractor. Special care must be taken during handling, shipping and installation of trusses. See "WARNING" note below.

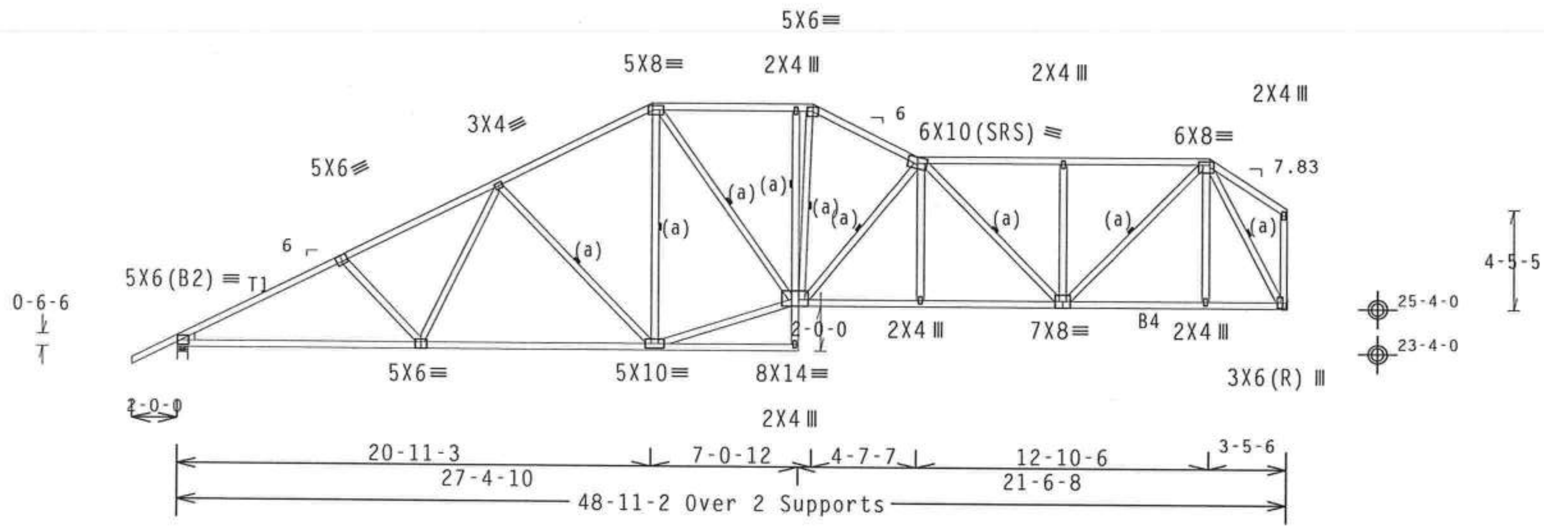

R=2155 U=575 W=5.5"
RL=285/-201

R=2013 U=555 H=ITW (KC) HDTP26
Supported Member Face: (6) 0.131"x1.5" nails
Supporting Member Face: (14) 0.148"x1.5" nails
Supporting Member: (2) 2x8 SP_SS_12A

PLT TYP. Wave

Design Crit: FBC2010Res/TPI-2007(STD)
FT/RT=20%(0%)/10(0) 10.03. QTY:

ALPINE
ITW Building Components Group Inc.
Haines City, FL 33844
FL COA #0 278

WARNING READ AND FOLLOW ALL NOTES ON THIS SHEET!
IMPORTANT FURNISH THIS DESIGN TO ALL CONTRACTORS INCLUDING INSTALLERS.

Trusses require extreme care in fabricating, handling, shipping, installing and bracing. Refer to and follow the latest edition of BCSI (Building Component Safety Information, by TPI and WTCA) for safety practices prior to performing these functions. Installers shall provide temporary bracing per BCSI. Unless noted otherwise, top chord shall have properly attached structural sheathing and bottom chord shall have a properly attached rigid ceiling. Locations shown for permanent lateral restraint of webs shall have bracing installed per BCSI sections B3, B7 or B10, as applicable.

ITW Building Components Group Inc. (ITWBCG) shall not be responsible for any deviation from this design; any failure to build the truss in conformance with ANSI/TPI 1, or for handling, shipping, installation & bracing of trusses. Apply plates to each face of truss and position as shown above and on the Joint Details, unless noted otherwise. Refer to drawings 160A-Z for standard plate positions. A seal on this drawing or cover page listing this drawing, indicates acceptance of professional engineering responsibility solely for the design shown. The suitability and use of this design for any structure is the responsibility of the Building Designer per ANSI/TPI 1 Sec.2. For more information see: This job's general notes page: ITW-BCG: www.itwbcg.com; TPI: www.tpinst.org; WTCA: www.sbcindustry.com; ICC: www.iccsafe.org

WALTER P. FINN
LICENSE
No. 22839
STATE OF FLORIDA
PROFESSIONAL ENGINEER

07/19/2012

FL/-/5/-/-/R/-		Scale =.125"/Ft.
TC LL	20.0 PSF	REF R215-- 20112
TC DL	10.0 PSF	DATE 07/19/12
BC DL	10.0 PSF	DRW HCUSR215 12201009
BC LL	0.0 PSF	HC-ENG DR/WPF
TOT.LD.	40.0 PSF	SEQN- 251033
DUR.FAC.	1.25	FROM LRB
SPACING	24.0"	JREF- 1UNX215_Z01

THIS DWG PREPARED FROM COMPUTER INPUT (LOADS & DIMENSIONS) SUBMITTED BY TRUSS MFR.

(7819-/STEVE BECK ADDITION /OWNER BUILDER -- Columbia County, FL - B8)

Top chord 2x4 SP_SS_12A :T2, T6, T7 2x4 SP_#2_N__12A:
Bot chord 2x4 SP_SS_12A
Webs 2x4 SP_#2_N__12A
:Lt Wedge 2x4 SP_#2_N__12A:

Lumber grades designated with "12A" use design values approved 1/5/2012 by ALSC.

H = recommended connection based on manufacturer tested capacities and calculations. Conditions may exist that require different connections than indicated. Refer to manufacturer publication for additional information. Additional connection required to evenly distribute hanger reaction throughout all plies of supporting girder.

Hanger specified assumes connection to supporting chord is located a minimum of five times the depth of the supporting chord from any unsupported end, unless unsupported chord end has 85% plating coverage.

In lieu of structural panels use purlins to brace all flat TC @ 24" OC.

Deflection meets L/240 live and L/180 total load. Creep increase factor for dead load is 1.50.

The overall height of this truss excluding overhang is 11-0-0.

(**) 1 plate(s) require special positioning. Refer to scaled plate plot details for special positioning requirements.

130 mph wind, 28.60 ft mean hgt, ASCE 7-10, CLOSED bldg, not located within 6.50 ft from roof edge, RISK CAT II, EXP C, wind TC DL=5.0 psf, wind BC DL=5.0 psf. GCpi(+/-)=0.18

Wind loads and reactions based on MWFRS with additional C&C member design.

Right end vertical not exposed to wind pressure.

(H1) = (J) Hanger not calculated (2)2x8 SP_SS_12A supporting member.

(a) Continuous lateral bracing equally spaced on member.

Bottom chord checked for 10.00 psf non-concurrent live load.

WARNING: Furnish a copy of this DWG to the installation contractor. Special care must be taken during handling, shipping and installation of trusses. See "WARNING" note below.

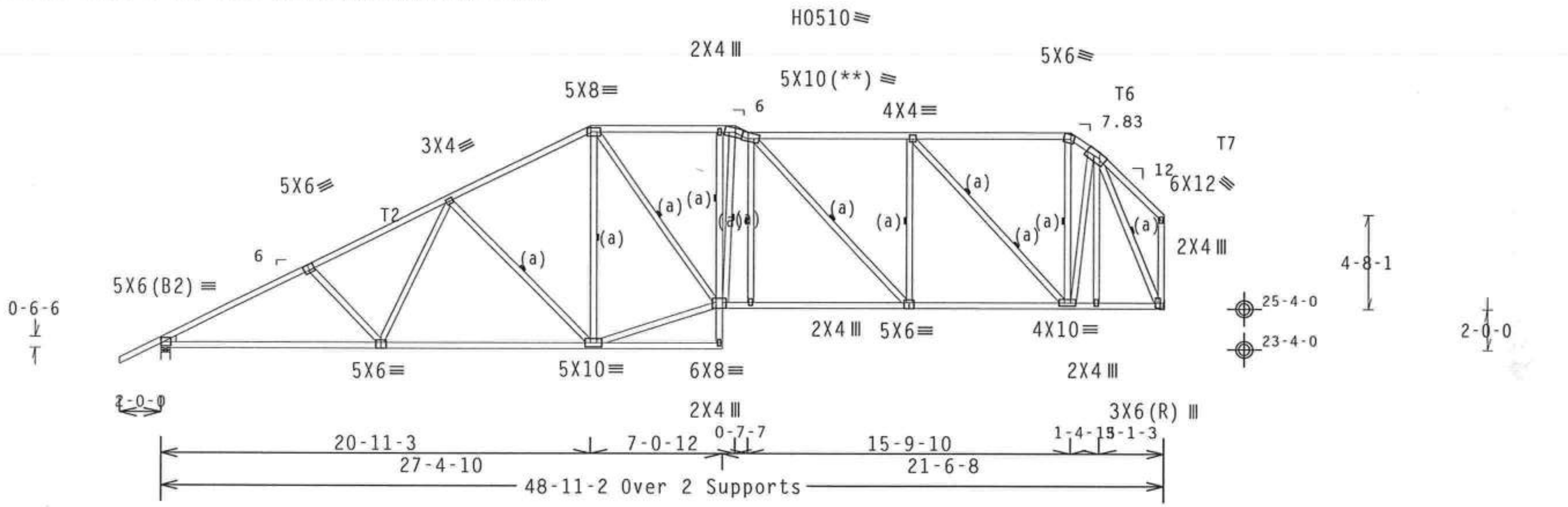

R=2028 U=548 H=ITW (KC) HDTP26
Supported Member Face: (6) 0.131"x1.5" nails
Supporting Member Face: (14) 0.148"x1.5" nails
Supporting Member: (2) 2x8 SP_SS_12A

R=2156 U=574 W=5.5"
RL=302/-194

Design Crit: FBC2010Res/TPI-2007(STD)
FT/RT=20%(0%)/10(0) 10.03.1 ... QTY:

PLT TYP. 20 Gauge HS,Wave

WARNING READ AND FOLLOW ALL NOTES ON THIS SHEET!
IMPORTANT FURNISH THIS DESIGN TO ALL CONTRACTORS INCLUDING INSTALLERS.

Trusses require extreme care in fabricating, handling, shipping, installing and bracing. Refer to and follow the latest edition of BCSI (Building Component Safety Information, by TPI and WTCA) for safety practices prior to performing these functions. Installers shall provide temporary bracing per BCSI. Unless noted otherwise, top chord shall have properly attached structural sheathing and bottom chord shall have a properly attached rigid ceiling. Locations shown for permanent lateral restraint of webs shall have bracing installed per BCSI sections B3, B7 or B10, as applicable.

ITW Building Components Group Inc. (ITWBCG) shall not be responsible for any deviation from this drawing, any failure to build the truss in conformance with ANSI/TPI 1, or for handling, shipping, installation & bracing of trusses. Apply plates to each face of truss and position as shown above and on the Joint Details, unless noted otherwise. Refer to drawings 160A-Z for standard plate positions. A seal on this drawing or cover page listing this drawing, indicates acceptance of professional engineering responsibility solely for the design shown. The suitability and use of this design for any structure is the responsibility of the Building Designer per ANSI/TPI 1 Sec.2. For more information see: This job's general notes page; ITW-BCG: www.itwbcg.com; TPI: www.tpinst.org; WTCA: www.sbcindustry.com; ICC: www.iccsafe.org

ALPINE
ITW Building Components Group Inc.
Haines City, FL 33844
FL COA #0 278

WALTER P. FINN LICENSE No. 22839 STATE OF FLORIDA PROFESSIONAL ENGINEER
07/19/2012

FL/-/5/-/-/R/-	
TC LL	20.0 PSF
TC DL	10.0 PSF
BC DL	10.0 PSF
BC LL	0.0 PSF
TOT.LD.	40.0 PSF
DUR.FAC.	1.25
SPACING	24.0"

Scale =.125"/Ft.	
REF	R215-- 20113
DATE	07/19/12
DRW	HCUSR215 12201010
HC-ENG	DR/WPF
SEQN-	251036
FROM	LRB
JREF-	1UNX215_Z01

THIS DWG PREPARED FROM COMPUTER INPUT (LOADS & DIMENSIONS) SUBMITTED BY TRUSS MFR.

(7819-/STEVE BECK ADDITION /OWNER BUILDER -- Columbia County, FL - C1)

Top chord 2x4 SP_#2_N__12A
Bot chord 2x4 SP_#2_N__12A
Webs 2x4 SP_#2_N__12A

Lumber grades designated with "12A" use design values approved 1/5/2012 by ALSC.

Left end vertical not exposed to wind pressure.

Calculated horizontal deflection is 0.03" due to live load and 0.26" due to dead load.

See DWGS A14030ENC100212 & GBLLETIN0212 for more requirements.

In lieu of structural panels use purlins to brace all flat TC @ 24" OC.

+ MEMBER TO BE LATERALLY BRACED FOR OUT OF PLANE WIND LOADS. BRACING SYSTEM TO BE DESIGNED AND FURNISHED BY OTHERS.

The building designer is responsible for the design of the roof and ceiling diaphragms, gable end shear walls, and supporting shear walls. Shear walls must provide continuous lateral restraint to the gable end. All connections to be designed by the building designer.

(**) 1 plate(s) require special positioning. Refer to scaled plate plot details for special positioning requirements.

130 mph wind, 28.82 ft mean hgt, ASCE 7-10, CLOSED bldg, Located anywhere in roof, RISK CAT II, EXP C, wind TC DL=5.0 psf, wind BC DL=5.0 psf. GCpi(+/-)=0.18

Wind loads and reactions based on MWFRS with additional C&C member design.

Gable end supports 8" max rake overhang.

(a) Continuous lateral bracing equally spaced on member.

Bottom chord checked for 10.00 psf non-concurrent live load.

Deflection meets L/240 live and L/180 total load. Creep increase factor for dead load is 1.50.

The overall height of this truss excluding overhang is 10-8-1.

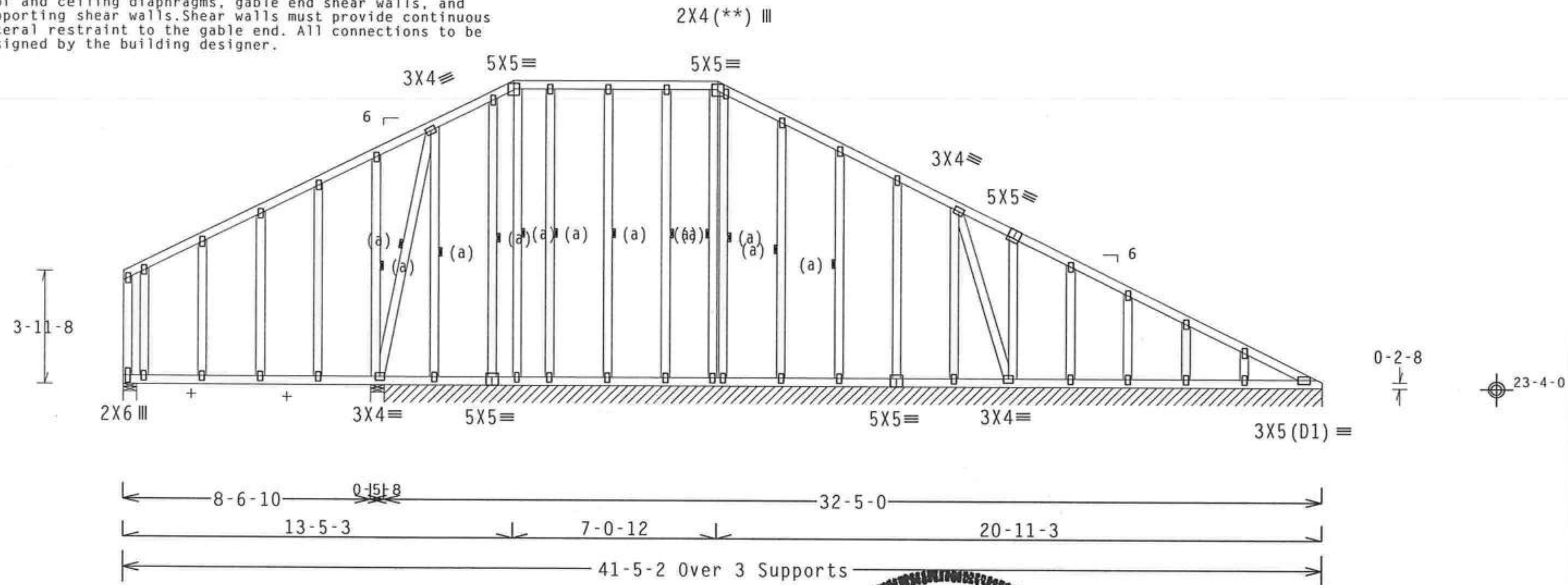

R=323 U=132 W=5.5" R=75 PLF U=18 PLF W=32-5-0
RL=202/-262 R=794 U=331 W=5.5"

Note: All Plates Are 2X4 Except As Shown.

Design Crit: FBC2010Res/TPI-2007(STD)
FT/RT=20%(0%)/10(0) 10.03. QTY:

PLT TYP. Wave

ALPINE
ITW Building Components Group Inc.
Haines City, FL 33844
FL COA #0 278

WARNING READ AND FOLLOW ALL NOTES ON THIS SHEET!
IMPORTANT FURNISH THIS DESIGN TO ALL CONTRACTORS INCLUDING INSTALLERS.

Trusses require extreme care in fabricating, handling, shipping, installing and bracing. Refer to and follow the latest edition of BCSI (Building Component Safety Information, by TPI and WTCA) for safety practices prior to performing these functions. Installers shall provide temporary bracing per BCSI. Unless noted otherwise, top chord shall have properly attached structural sheathing and bottom chord shall have a properly attached rigid ceiling. Locations shown for permanent lateral restraint of webs shall have bracing installed per BCSI sections B3, B7 or B10, as applicable.

ITW Building Components Group Inc. (ITWBCG) shall not be responsible for any deviation from this design; any failure to build the truss in conformance with ANSI/TPI 1, or for handling, shipping, installation & bracing of trusses. Apply plates to each face of truss and position as shown above and on the Joint Details, unless noted otherwise. Refer to drawings 160A-Z for standard plate positions. A seal on this drawing or cover page listing this drawing, indicates acceptance of professional engineering responsibility solely for the design shown. The suitability and use of this design for any structure is the responsibility of the Building Designer per ANSI/TPI 1 Sec.2. For more information see: This job's general notes page: ITW-BCG: www.itwbcg.com; TPI: www.tpinst.org; WTCA: www.sbcindustry.com; ICC: www.iccsafe.org

WALTER P. FINN LICENSE No. 22839 STATE OF FLORIDA PROFESSIONAL ENGINEER
07/19/2012

FL/-/5/-/-/R/-	
TC LL	20.0 PSF
TC DL	10.0 PSF
BC DL	10.0 PSF
BC LL	0.0 PSF
TOT.LD.	40.0 PSF
DUR.FAC.	1.25
SPACING	24.0"

Scale =.1875"/Ft.	
REF	R215-- 20114
DATE	07/19/12
DRW	HCUSR215 12201011
HC-ENG	DR/WPF
SEQN-	345315
FROM	LRB
JREF-	1UNX215_Z01

(7819-/STEVE BECK ADDITION /OWNER BUILDER -- Columbia County, FL - C2)

Top chord 2x4 SP_#2_N__12A :T4 2x4 SP_SS_12A:
Bot chord 2x4 SP_#2_N__12A :B2 2x4 SP_SS_12A:
Webs 2x4 SP_#2_N__12A :W14 2x4 SP_SS_12A:

Lumber grades designated with "12A" use design values approved 1/5/2012 by ALSC.

Left end vertical not exposed to wind pressure.

(H1) = (J) Hanger not calculated (2)2x8 SP_SS_12A supporting member.

In lieu of structural panels use purlins to brace all flat TC @ 24" OC.

Deflection meets L/240 live and L/180 total load. Creep increase factor for dead load is 1.50.

130 mph wind, 30.47 ft mean hgt, ASCE 7-10, CLOSED bldg, Located anywhere in roof, RISK CAT II, EXP C, wind TC DL=5.0 psf, wind BC DL=5.0 psf. GCpi(+/-)=0.18

Wind loads and reactions based on MWFRS with additional C&C member design.

Calculated horizontal deflection is 0.11" due to live load and 0.18" due to dead load.

(a) Continuous lateral bracing equally spaced on member.

Bottom chord checked for 10.00 psf non-concurrent live load.

The overall height of this truss excluding overhang is 11-0-0.

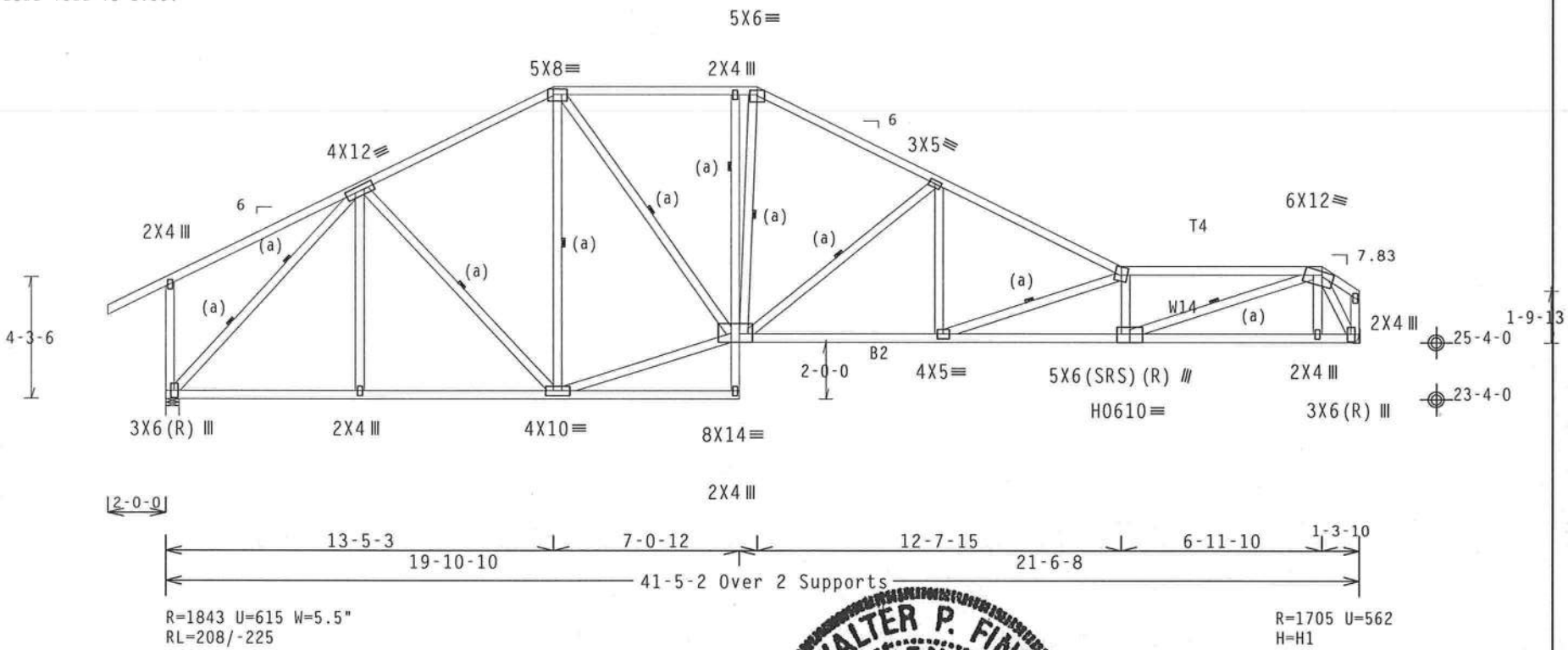

Design Crit: FBC2010Res/TPI-2007(STD)

PLT TYP. 20 Gauge HS,Wave FT/RT=20%(0%)/10(0) 10.03.11.0209.21 QTY 1 FL/-/5/-/-/R/- Scale =.1875"/Ft.

ALPINE
ITW Building Components Group Inc.
Haines City, FL 33844
FL COA #0 278

WARNING READ AND FOLLOW ALL NOTES ON THIS SHEET!
IMPORTANT FURNISH THIS DESIGN TO ALL CONTRACTORS INCLUDING INSTALLERS.

Trusses require extreme care in fabricating, handling, shipping, installing and bracing. Refer to and follow the latest edition of BCSI (Building Component Safety Information, by TPI and WTCA) for safety practices prior to performing these functions. Installers shall provide temporary bracing per BCSI. Unless noted otherwise, top chord shall have properly attached structural sheathing and bottom chord shall have a properly attached rigid ceiling. Locations shown for permanent lateral restraint of webs shall have bracing installed per BCSI sections B3, B7 or B10, as applicable.

ITW Building Components Group Inc. (ITWBCG) shall not be responsible for any deviation from this design, any failure to build the truss in conformance with ANSI/TPI 1, or for handling, shipping, installing and bracing of trusses. Apply plates to each face of truss and position as shown above and on the Joint Details, unless noted otherwise. Refer to drawings 160A-Z for standard plate positions. A seal on this drawing or cover page listing this drawing, indicates acceptance of professional engineering responsibility solely for the design shown. The suitability and use of this design for any structure is the responsibility of the Building Designer per ANSI/TPI 1 Sec.2. For more information see: This job's general notes page; ITW-BCG: www.itwbcg.com; TPI: www.tpinst.org; WTCA: www.sbcindustry.com; ICC: www.iccsafe.org

WALTER P. FINN LICENSE No.22839 STATE OF FLORIDA PROFESSIONAL ENGINEER
07/19/2012

TC LL	20.0 PSF	REF	R215-- 20115
TC DL	10.0 PSF	DATE	07/19/12
BC DL	10.0 PSF	DRW	HCUSR215 12201012
BC LL	0.0 PSF	HC-ENG	DR/WPF
TOT.LD.	40.0 PSF	SEQN-	250366
DUR.FAC.	1.25	FROM	LRB
SPACING	24.0"	JREF-	1UNX215_Z01

(7819-/STEVE BECK ADDITION /OWNER BUILDER -- Columbia County, FL - C3)

THIS DWG PREPARED FROM COMPUTER INPUT (LOADS & DIMENSIONS) SUBMITTED BY TRUSS MFR.

Top chord 2x4 SP_#2_N__12A
Bot chord 2x4 SP_SS_12A :B1 2x4 SP_#2_N__12A:
Webs 2x4 SP_#2_N__12A

Lumber grades designated with "12A" use design values approved 1/5/2012 by ALSC.

End verticals not exposed to wind pressure.

(a) Continuous lateral bracing equally spaced on member.

Bottom chord checked for 10.00 psf non-concurrent live load.

Deflection meets L/240 live and L/180 total load. Creep increase factor for dead load is 1.50.

130 mph wind, 30.47 ft mean hgt, ASCE 7-10, CLOSED bldg, Located anywhere in roof, RISK CAT II, EXP C, wind TC DL=5.0 psf, wind BC DL=5.0 psf. GCpi(+/-)=0.18

Wind loads and reactions based on MWFRS with additional C&C member design.

(H1) = (J) Hanger not calculated (2)2x8 SP_SS_12A supporting member.

In lieu of structural panels use purlins to brace all flat TC @ 24" OC.

The overall height of this truss excluding overhang is 11-0-0.

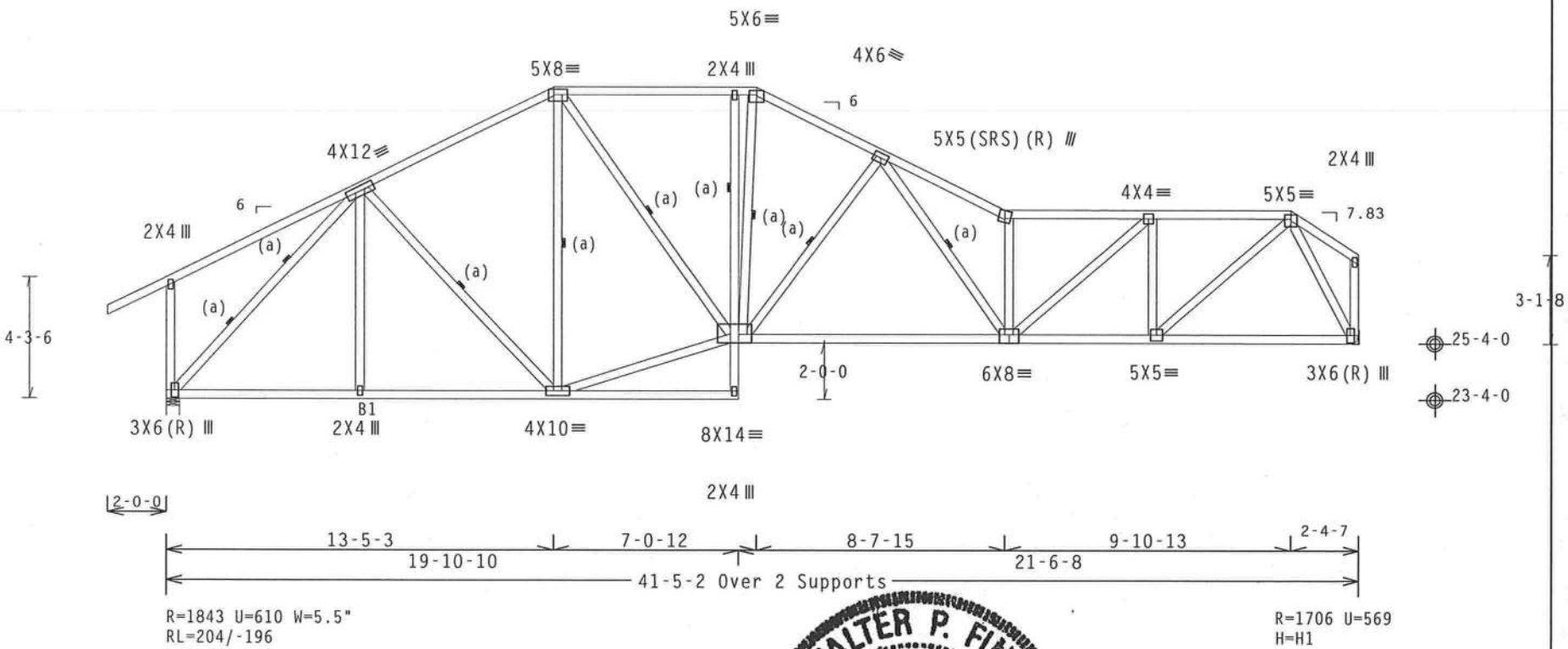

Design Crit: FBC2010Res/TPI-2007(STD)
FT/RT=20%(0%)/10(0)

PLT TYP. Wave

10.03 11.0209.21 QTY 1 FL/-/5/-/-/R/- Scale =.1875"/Ft.

WALTER P. FINN LICENSE No.22839 STATE OF FLORIDA PROFESSIONAL ENGINEER

07/19/2012

ALPINE
ITW Building Components Group Inc.
Haines City, FL 33844
FL COA #0 278

WARNING READ AND FOLLOW ALL NOTES ON THIS SHEET!
IMPORTANT FURNISH THIS DESIGN TO ALL CONTRACTORS INCLUDING INSTALLERS.

Trusses require extreme care in fabricating, handling, shipping, installing and bracing. Refer to and follow the latest edition of BCSI (Building Component Safety Information, by TPI and WTCA) for recommended practices prior to performing these functions. Installers shall provide temporary bracing per BCSI. Unless noted otherwise, top chord shall have properly attached structural sheathing and bottom chord shall have a properly attached rigid ceiling. Locations shown for permanent lateral restraint of webs shall have bracing installed per BCSI sections B3, B7 or B10, as applicable.

ITW Building Components Group Inc. (ITWBCG) shall not be responsible for any deviation from this design, any failure to build the truss in conformance with ANSI/TPI 1, or for handling, shipping, installing and bracing of trusses. Apply plates to each face of truss and position as shown above and on the Joint Details, unless noted otherwise. Refer to drawings 160A-Z for standard plate positions. A seal on this drawing or cover page listing this drawing, indicates acceptance of professional engineering responsibility solely for the design shown. The suitability and use of this design for any structure is the responsibility of the Building Designer per ANSI/TPI 1 Sec.2. For more information see: This job's general notes page; ITW-BCG: www.itwbcg.com; TPI: www.tpinst.org; WTCA: www.sbcindustry.com; ICC: www.iccsafe.org

TC LL	20.0 PSF	REF	R215-- 20116
TC DL	10.0 PSF	DATE	07/19/12
BC DL	10.0 PSF	DRW	HCUSR215 12201013
BC LL	0.0 PSF	HC-ENG	DR/WPF
TOT.LD.	40.0 PSF	SEQN-	250352
DUR.FAC.	1.25	FROM	LRB
SPACING	24.0"	JREF-	1UNX215_Z01

(7819-/STEVE BECK ADDITION /OWNER BUILDER -- Columbia County, FL - C4)

THIS DWG PREPARED FROM COMPUTER INPUT (LOADS & DIMENSIONS) SUBMITTED BY TRUSS MFR.

Top chord 2x4 SP_#2_N__12A
Bot chord 2x4 SP_#2_N__12A
Webs 2x4 SP_#2_N__12A

Lumber grades designated with "12A" use design values approved 1/5/2012 by ALSC.

End verticals not exposed to wind pressure.

(a) Continuous lateral bracing equally spaced on member.

Bottom chord checked for 10.00 psf non-concurrent live load.

Deflection meets L/240 live and L/180 total load. Creep increase factor for dead load is 1.50.

130 mph wind, 30.47 ft mean hgt, ASCE 7-10, CLOSED bldg, not located within 6.50 ft from roof edge, RISK CAT II, EXP C, wind TC DL=5.0 psf, wind BC DL=5.0 psf. GCpi(+/-)=0.18

Wind loads and reactions based on MWFRS with additional C&C member design.

(H1) = (J) Hanger not calculated (2)2x8 SP_SS_12A supporting member.

In lieu of structural panels use purlins to brace all flat TC @ 24" OC.

The overall height of this truss excluding overhang is 11-0-0.

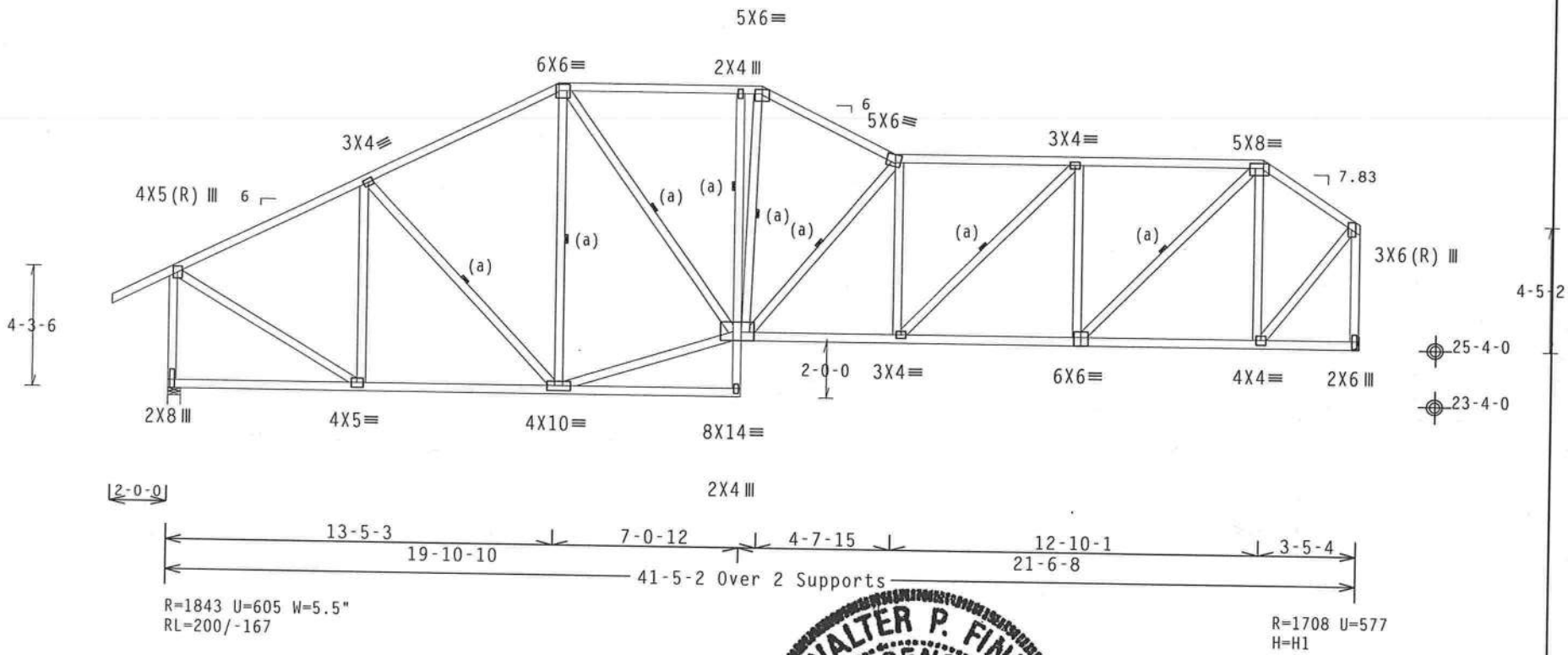

PLT TYP. Wave

Design Crit: FBC2010Res/TPI-2007(STD) 10.03.11.0209.21 QTY:1 FL/-/5/-/-/R/- Scale =.1875"/Ft.
FT/RT=20%(0%)/10(0)

ALPINE
ITW Building Components Group Inc.
Haines City, FL 33844
FL COA #0 278

WARNING READ AND FOLLOW ALL NOTES ON THIS SHEET!
IMPORTANT FURNISH THIS DESIGN TO ALL CONTRACTORS INCLUDING INSTALLERS.

Trusses require extreme care in fabricating, handling, shipping, installing and bracing. Refer to and follow the latest edition of BCSI (Building Component Safety Information, by TPI and WTCA) for safety practices prior to performing these functions. Installers shall provide temporary bracing per BCSI. Unless noted otherwise, top chord shall have properly attached structural sheathing and bottom chord shall have a properly attached rigid ceiling. Locations shown for permanent lateral restraint of webs shall have bracing installed per BCSI sections B3, B7 or B10, as applicable.

ITW Building Components Group Inc. (ITWBCG) shall not be responsible for any deviation from this design, any failure to build the truss in conformance with ANSI/TPI 1, or for handling, shipping, installing and bracing of trusses. Apply plates to each face of truss and position as shown above and on the Joint Details, unless noted otherwise. Refer to drawings 160A-Z for standard plate positions. A seal on this drawing or cover page listing this drawing, indicates acceptance of professional engineering responsibility solely for the design shown. The suitability and use of this design for any structure is the responsibility of the Building Designer per ANSI/TPI 1 Sec.2. For more information see: This job's general notes page; ITW-BCG: www.itwbcg.com; TPI: www.tpinst.org; WTCA: www.sbcindustry.com; ICC: www.iccsafe.org

WALTER P. FINN LICENSE No.22839 STATE OF FLORIDA PROFESSIONAL ENGINEER
07/19/2012

TC LL	20.0 PSF	REF	R215-- 20117
TC DL	10.0 PSF	DATE	07/19/12
BC DL	10.0 PSF	DRW	HCUSR215 12201014
BC LL	0.0 PSF	HC-ENG	DR/WPF
TOT.LD.	40.0 PSF	SEQN-	250334
DUR.FAC.	1.25	FROM	LRB
SPACING	24.0"	JREF-	1UNX215_Z01

(7819-/STEVE BECK ADDITION /OWNER BUILDER -- Columbia County, FL - C5)

THIS DWG PREPARED FROM COMPUTER INPUT (LOADS & DIMENSIONS) SUBMITTED BY TRUSS MFR.

Top chord 2x4 SP_#2_N__12A
Bot chord 2x4 SP_#2_N__12A :B2 2x4 SP_SS_12A:
Webs 2x4 SP_#2_N__12A

Lumber grades designated with "12A" use design values approved 1/5/2012 by ALSC.

End verticals not exposed to wind pressure.

(H1) = (J) Hanger not calculated (2)2x8 SP_SS_12A supporting member.

In lieu of structural panels use purlins to brace all flat TC @ 24" OC.

Deflection meets L/240 live and L/180 total load. Creep increase factor for dead load is 1.50.

(**) 2 plate(s) require special positioning. Refer to scaled plate plot details for special positioning requirements.

130 mph wind, 30.47 ft mean hgt, ASCE 7-10, CLOSED bldg, not located within 6.50 ft from roof edge, RISK CAT II, EXP C, wind TC DL=5.0 psf, wind BC DL=5.0 psf. GCpi(+/-)=0.18

Wind loads and reactions based on MWFRS with additional C&C member design.

(a) Continuous lateral bracing equally spaced on member.

Bottom chord checked for 10.00 psf non-concurrent live load.

The overall height of this truss excluding overhang is 11-0-0.

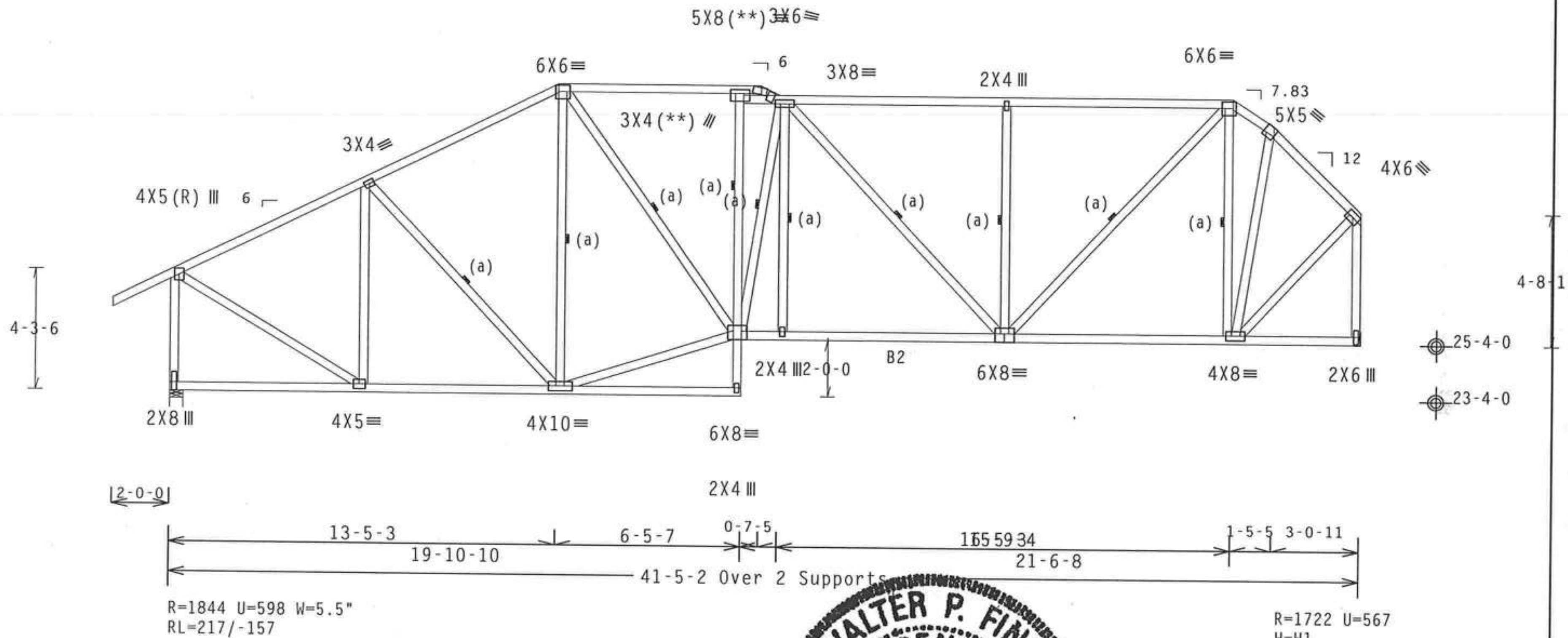

PLT TYP. Wave

Design Crit: FBC2010Res/TPI-2007(STD)
FT/RT=20%(0%)/10(0) 10.03.1

ALPINE
ITW Building Components Group Inc.
Haines City, FL 33844
FL COA #0 278

WARNING READ AND FOLLOW ALL NOTES ON THIS SHEET!
IMPORTANT FURNISH THIS DESIGN TO ALL CONTRACTORS INCLUDING INSTALLERS.

Trusses require extreme care in fabricating, handling, shipping, installing and bracing. Refer to and follow the latest edition of BCSI (Building Component Safety Information, by TPI and WTCA) for safety practices prior to performing these functions. Installers shall provide temporary bracing per BCSI. Unless noted otherwise, top chord shall have properly attached structural sheathing and bottom chord shall have a properly attached rigid ceiling. Locations shown for permanent lateral restraint of webs shall have bracing installed per BCSI sections B3, B7 or B10, as applicable.

ITW Building Components Group Inc. (ITWBCG) shall not be responsible for any deviation from this design, any failure to build the truss in conformance with ANSI/TPI 1, or for handling, shipping, installation & bracing of trusses. Apply plates to each face of truss and position as shown above and on the Joint Details, unless noted otherwise. Refer to drawings 160A-Z for standard plate positions. A seal on this drawing or cover page listing this drawing, indicates acceptance of professional engineering responsibility solely for the design shown. The suitability and use of this design for any structure is the responsibility of the Building Designer per ANSI/TPI 1 Sec.2. For more information see: This job's general notes page; ITW-BCG: www.itwbcg.com; TPI: www.tpinst.org; WTCA: www.sbcindustry.com; ICC: www.iccsafe.org

WALTER P. FINN LICENSE No. 22839 STATE OF FLORIDA PROFESSIONAL ENGINEER
07/19/2012

QTY:

FL/-/5/-/-/R/-	
TC LL	20.0 PSF
TC DL	10.0 PSF
BC DL	10.0 PSF
BC LL	0.0 PSF
TOT.LD.	40.0 PSF
DUR.FAC.	1.25
SPACING	24.0"

Scale =.1875"/Ft.	
REF	R215-- 20118
DATE	07/19/12
DRW	HCUSR215 12201015
HC-ENG	DR/WPF
SEQN-	250342
FROM	LRB
JREF-	1UNX215_Z01

(7819-/STEVE BECK ADDITION /OWNER BUILDER -- Columbia County, FL - D1)

THIS DWG PREPARED FROM COMPUTER INPUT (LOADS & DIMENSIONS) SUBMITTED BY TRUSS MFR.

Top chord 2x4 SP_#2_N__12A
Bot chord 2x4 SP_#2_N__12A
Webs 2x4 SP_#2_N__12A
:Lt Slider 2x6 SP_#2_N_12A: BLOCK LENGTH = 1.945'
:Rt Slider 2x6 SP_#2_N_12A: BLOCK LENGTH = 1.945'

Lumber grades designated with "12A" use design values approved 1/5/2012 by ALSC.

See DWGS A14030ENC100212 & GBLLETIN0212 for more requirements.

Deflection meets L/240 live and L/180 total load. Creep increase factor for dead load is 1.50.

+ MEMBER TO BE LATERALLY BRACED FOR OUT OF PLANE WIND LOADS. BRACING SYSTEM TO BE DESIGNED AND FURNISHED BY OTHERS.

The building designer is responsible for the design of the roof and ceiling diaphragms, gable end shear walls, and supporting shear walls.Shear walls must provide continuous lateral restraint to the gable end. All connections to be designed by the building designer.

130 mph wind, 26.79 ft mean hgt, ASCE 7-10, CLOSED bldg, Located anywhere in roof, RISK CAT II, EXP C, wind TC DL=5.0 psf, wind BC DL=5.0 psf. GCpi(+/-)=0.18

Wind loads and reactions based on MWFRS with additional C&C member design.

Gable end supports 8" max rake overhang.

Bottom chord checked for 10.00 psf non-concurrent live load.

The overall height of this truss excluding overhang is 5-9-7.

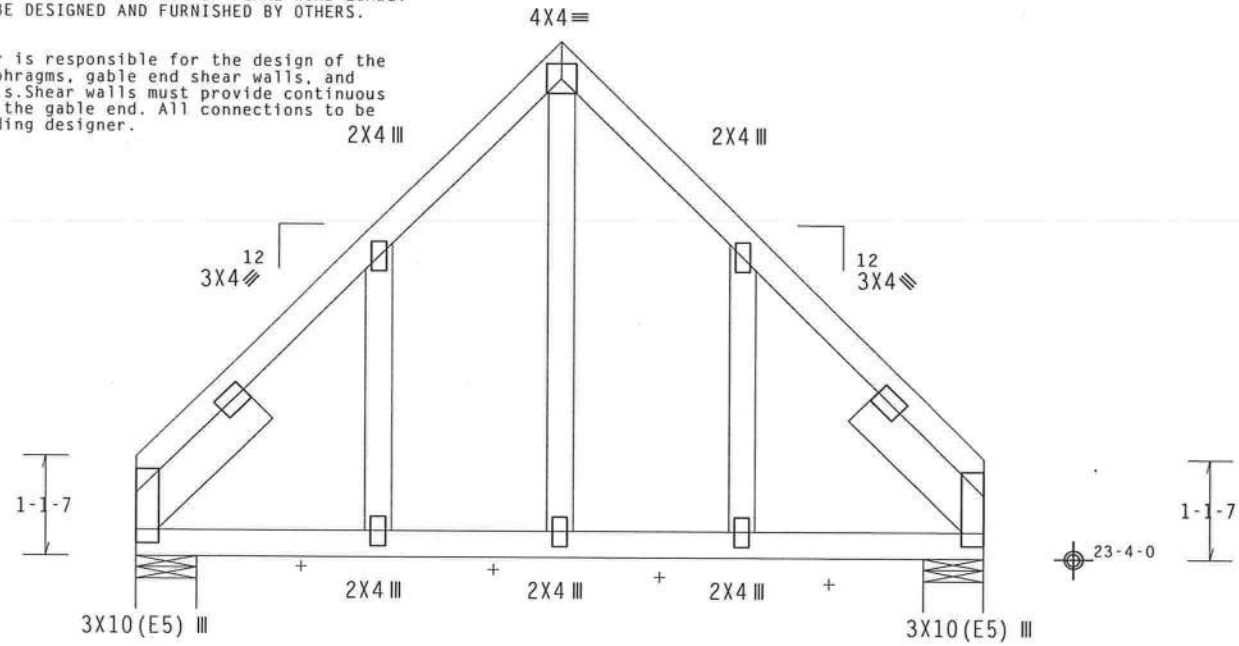

R=412 U=122 W=8"
RL=151/-151

Design Crit: FBC2010Res/TPI-2007(STD) FT/RT=20%(0%)/10(0) 10.03.11.0209.21 QTY 1 FL/-/5/-/-/R/- Scale =.5"/Ft.

PLT TYP. Wave

ALPINE
ITW Building Components Group Inc.
Haines City, FL 33844
FL COA #0 278

WARNING READ AND FOLLOW ALL NOTES ON THIS SHEET!
IMPORTANT FURNISH THIS DESIGN TO ALL CONTRACTORS INCLUDING INSTALLERS.

Trusses require extreme care in fabricating, handling, shipping, installing and bracing. Refer to and follow the latest edition of BCSI (Building Component Safety Information, by TPI and WTCA) BCSI. practices prior to performing these functions. Installers shall provide temporary bracing Unless noted otherwise, top chord shall have properly attached structural sheathing and bottom chord shall have a properly attached rigid ceiling. Locations shown for permanent lateral restraint of webs shall have bracing installed per BCSI sections B3, B7 or B10, as applicable.

ITW Building Components Group Inc. (ITWBCG) shall not be responsible for any deviation from any failure to build the truss in conformance with ANSI/TPI 1, or for handling, shipping, installing and bracing of trusses. Apply plates to each face of truss and position as shown above and on the Joint Details, unless noted otherwise. Refer to drawings 160A-Z for standard plate positions. A seal on this drawing or cover page listing this drawing, indicates acceptance of professional engineering responsibility solely for the design shown. The suitability and use of this design for any structure is the responsibility of the Building Designer per ANSI/TPI 1 Sec.2. For more information see: This job's general notes page; ITW-BCG: www.itwbcg.com; TPI: www.tpinst.org; WTCA: www.sbcindustry.com; ICC: www.iccsafe.org

WALTER P. FINN LICENSE No.22839 STATE OF FLORIDA PROFESSIONAL ENGINEER

07/19/2012

TC LL	20.0 PSF	REF	R215-- 20119
TC DL	10.0 PSF	DATE	07/19/12
BC DL	10.0 PSF	DRW	HCUSR215 12201016
BC LL	0.0 PSF	HC-ENG	DR/WPF
TOT.LD.	40.0 PSF	SEQN-	345249
DUR.FAC.	1.25	FROM	LRB
SPACING	24.0"	JREF-	1UNX215_Z01

(7819-/STEVE BECK ADDITION /OWNER BUILDER -- Columbia County, FL - D2)

THIS DWG PREPARED FROM COMPUTER INPUT (LOADS & DIMENSIONS) SUBMITTED BY TRUSS MFR.

Top chord 2x4 SP_#2_N__12A
Bot chord 2x4 SP_#2_N__12A
Webs 2x4 SP_#2_N__12A

Lumber grades designated with "12A" use design values approved 1/5/2012 by ALSC.

Bottom chord checked for 10.00 psf non-concurrent live load.

The overall height of this truss excluding overhang is 6-2-6.

130 mph wind, 27.20 ft mean hgt, ASCE 7-10, CLOSED bldg, Located anywhere in roof, RISK CAT II, EXP C, wind TC DL=5.0 psf, wind BC DL=5.0 psf. GCpi(+/-)=0.18

Wind loads and reactions based on MWFRS with additional C&C member design.

Deflection meets L/240 live and L/180 total load. Creep increase factor for dead load is 1.50.

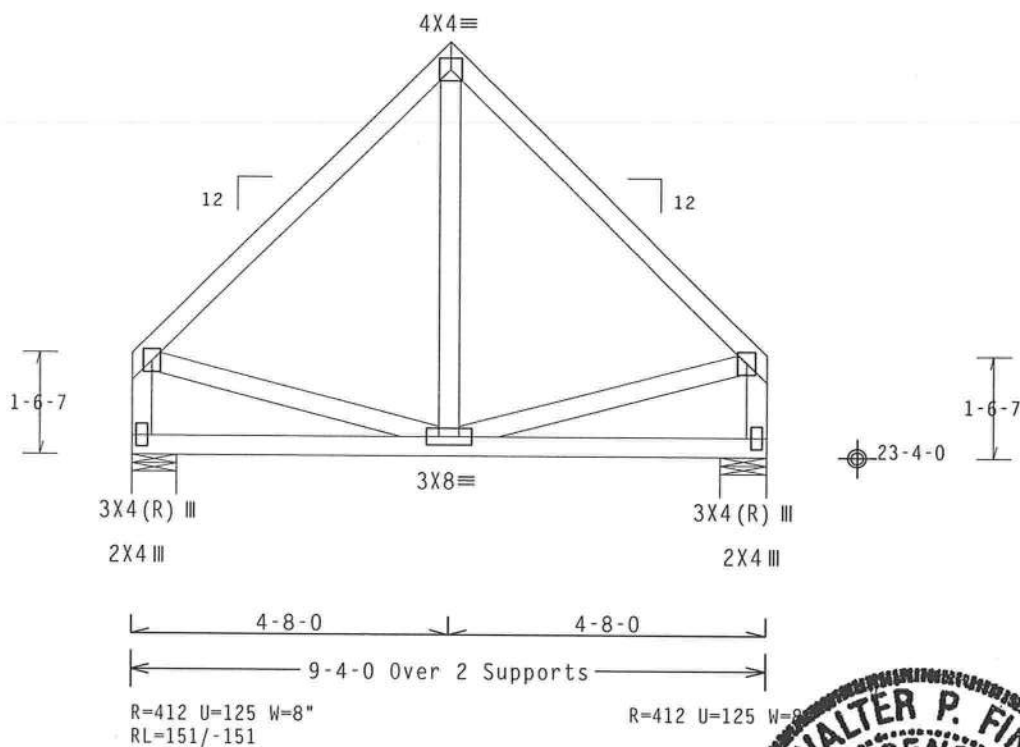

Design Crit: FBC2010Res/TPI-2007(STD)
FT/RT=20%(0%)/10(0) 10.03.1 QTY:

PLT TYP. Wave

ALPINE

ITW Building Components Group Inc.
Haines City, FL 33844
FL COA #0 278

WARNING READ AND FOLLOW ALL NOTES ON THIS SHEET!
IMPORTANT FURNISH THIS DESIGN TO ALL CONTRACTORS INCLUDING INSTALLERS.

Trusses require extreme care in fabricating, handling, shipping, installing and bracing. Refer to and follow the latest edition of BCSI (Building Component Safety Information, by TPI and WTCA) for safety practices prior to performing these functions. Installers shall provide temporary bracing per BCSI. Unless noted otherwise, top chord shall have properly attached structural sheathing and bottom chord shall have a properly attached rigid ceiling. Locations shown for permanent lateral restraint of webs shall have bracing installed per BCSI sections B3, B7 or B10, as applicable.

ITW Building Components Group Inc. (ITWBCG) shall not be responsible for any deviation from this design; any failure to build the truss in conformance with ANSI/TPI 1, or for handling, shipping, installation & bracing of trusses. Apply plates to each face of truss and position as shown above and on the Joint Details, unless noted otherwise. Refer to drawings 160A-Z for standard plate positions. A seal on this drawing or cover page listing this drawing, indicates acceptance of professional engineering responsibility solely for the design shown. The suitability and use of this design for any structure is the responsibility of the Building Designer per ANSI/TPI 1 Sec.2. For more information see: This job's general notes page: ITW-BCG: www.itwbcg.com; TPI: www.tpinst.org; WTCA: www.sbcindustry.com; ICC: www.iccsafe.org

WALTER P. FINN LICENSE No. 22839 STATE OF FLORIDA PROFESSIONAL ENGINEER

07/19/2012

FL/-/5/-/-/R/-	
TC LL	20.0 PSF
TC DL	10.0 PSF
BC DL	10.0 PSF
BC LL	0.0 PSF
TOT.LD.	40.0 PSF
DUR.FAC.	1.25
SPACING	24.0"

Scale =.375"/Ft.
REF R215-- 20120
DATE 07/19/12
DRW HCUSR215 12201017
HC-ENG DR/WPF
SEQN- 345248
FROM LRB
JREF- 1UNX215_Z01

(7819-/STEVE BECK ADDITION /OWNER BUILDER -- Columbia County, FL - G)

THIS DWG PREPARED FROM COMPUTER INPUT (LOADS & DIMENSIONS) SUBMITTED BY TRUSS MFR.

Top chord 2x4 SP_SS_12A :T2 2x6 SP_#2_N_12A:
:T3 2x4 SP_#2_N__12A:
Bot chord 2x8 SP_SS_12A
Webs 2x4 SP_#2_N__12A
:Lt Wedge 2x6 SP_#2_N_12A::Rt Wedge 2x4 SP_#2_N__12A:

Lumber grades designated with "12A" use design values approved 1/5/2012 by ALSC.

Special loads
------(Lumber Dur.Fac.=1.25 / Plate Dur.Fac.=1.25)
TC- From 64 plf at 0.00 to 64 plf at 17.65
BC- From 10 plf at 0.00 to 10 plf at 17.65
BC- 2007.15 lb Conc. Load at 1.21, 1.83
BC- 2009.20 lb Conc. Load at 3.83
BC- 2010.72 lb Conc. Load at 5.83
BC- 2025.42 lb Conc. Load at 7.83
BC- 1722.20 lb Conc. Load at 9.83
BC- 1707.75 lb Conc. Load at 11.83
BC- 1706.25 lb Conc. Load at 13.83
BC- 1704.70 lb Conc. Load at 15.83

In lieu of structural panels use purlins to brace all flat TC @ 24" OC.

This truss is not reversible. Per ANSI/TPI 1-2002, Section 2.4.3 Truss Manufacturer is responsible to provide information for proper orientation of trusses. This information shall be provided to the contractor.

2 COMPLETE TRUSSES REQUIRED

Nail Schedule:0.131"x3", min. nails
Top Chord: 1 Row @12.00" o.c.
Bot Chord: 2 Rows @ 3.50" o.c. (Each Row)
Webs : 1 Row @ 4" o.c.
Use equal spacing between rows and stagger nails in each row to avoid splitting.

Brg blocks:0.131"x3", min. nails

brg	x-loc	#blocks	length/blk	#nails/blk	wall plate
1	0.000'	1	12"	18	Rigid Surface

Brg block to be same size and species as chord.
Refer to drawing CNNAILSP0109 for more information.

(I) - plates so marked were sized using a Fabrication Tolerance of 0% and a Rotational Tolerance of 0 degrees.

130 mph wind, 27.80 ft mean hgt, ASCE 7-10, CLOSED bldg, not located within 6.50 ft from roof edge, RISK CAT II, EXP C, wind TC DL=5.0 psf, wind BC DL=5.0 psf. GCpi(+/-)=0.18

Wind loads and reactions based on MWFRS with additional C&C member design.

Deflection meets L/240 live and L/180 total load. Creep increase factor for dead load is 1.50.

The overall height of this truss excluding overhang is 4-5-0.

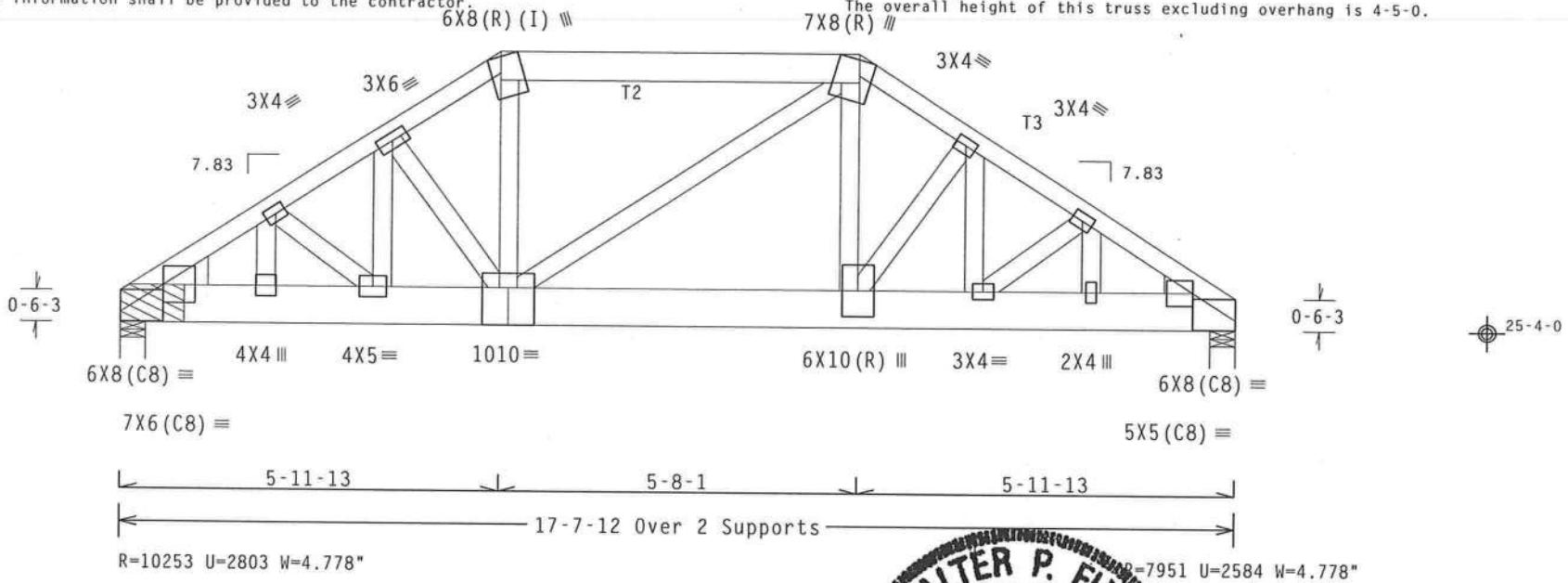

Design Crit: FBC2010Res/TPI-2007(STD)
FT/RT=20%(0%)/10(0)

PLT TYP. Wave

10.03.02 QTY:

FL/-/5/-/-/R/-

Scale =.375"/Ft.

WALTER P. FINN LICENSE No.22839 STATE OF FLORIDA PROFESSIONAL ENGINEER

07/19/2012

TC LL	20.0 PSF	REF R215-- 20121
TC DL	10.0 PSF	DATE 07/19/12
BC DL	10.0 PSF	DRW HCUSR215 12201029
BC LL	0.0 PSF	HC-ENG DR/WPF
TOT.LD.	40.0 PSF	SEQN- 250750
DUR.FAC.	1.25	FROM LRB
SPACING	24.0"	JREF- 1UNX215_Z01

ALPINE
ITW Building Components Group Inc.
Haines City, FL 33844
FL COA #0 278

WARNING READ AND FOLLOW ALL NOTES ON THIS SHEET!
IMPORTANT FURNISH THIS DESIGN TO ALL CONTRACTORS INCLUDING INSTALLERS.

Trusses require extreme care in fabricating, handling, shipping, installing and bracing. Refer to and follow the latest edition of BCSI (Building Component Safety Information, by TPI and WTCA) for safety practices prior to performing these functions. Installers shall provide temporary bracing per BCSI. Unless noted otherwise, top chord shall have properly attached structural sheathing and bottom chord shall have a properly attached rigid ceiling. Locations shown for permanent lateral restraint of webs shall have bracing installed per BCSI sections B3, B7 or B10, as applicable.

ITW Building Components Group Inc. (ITWBCG) shall not be responsible for any deviation from this design, any failure to build the truss in conformance with ANSI/TPI 1, or for handling, shipping, installation and bracing of trusses. Apply plates to each face of truss and position as shown above and on the Joint Details, unless noted otherwise. Refer to drawings 160A-Z for standard plate positions. A seal on this drawing or cover page listing this drawing, indicates acceptance of professional engineering responsibility solely for the design shown. The suitability and use of this design for any structure is the responsibility of the Building Designer per ANSI/TPI 1 Sec.2. For more information see: This job's general notes page; ITW-BCG: www.itwbcg.com; TPI: www.tpinst.org; WTCA: www.sbcindustry.com; ICC: www.iccsafe.org

(7819-/STEVE BECK ADDITION /OWNER BUILDER -- Columbia County, FL - J)

THIS DWG PREPARED FROM COMPUTER INPUT (LOADS & DIMENSIONS) SUBMITTED BY TRUSS MFR.

Top chord 2x4 SP_#2_N__12A
Bot chord 2x4 SP_#2_N__12A

Lumber grades designated with "12A" use design values approved 1/5/2012 by ALSC.

130 mph wind, 26.47 ft mean hgt, ASCE 7-10, CLOSED bldg, Located anywhere in roof, RISK CAT II, EXP C, wind TC DL=5.0 psf, wind BC DL=5.0 psf. GCpi(+/-)=0.18

Wind loads and reactions based on MWFRS with additional C&C member design.

Deflection meets L/240 live and L/180 total load. Creep increase factor for dead load is 1.50.

Special loads
------(Lumber Dur.Fac.=1.25 / Plate Dur.Fac.=1.25)
TC- From 0 plf at -2.27 to 67 plf at 0.00
TC- From 2 plf at 0.00 to 2 plf at 3.40
BC- From 0 plf at -2.27 to 5 plf at 0.00
BC- From 2 plf at 0.00 to 2 plf at 3.40
TC- -2.07 lb Conc. Load at 2.06
TC- 62.21 lb Conc. Load at 3.14
BC- 25.81 lb Conc. Load at 2.06
BC- 52.83 lb Conc. Load at 3.14

Bottom chord checked for 10.00 psf non-concurrent live load.

The overall height of this truss excluding overhang is 3-7-11.

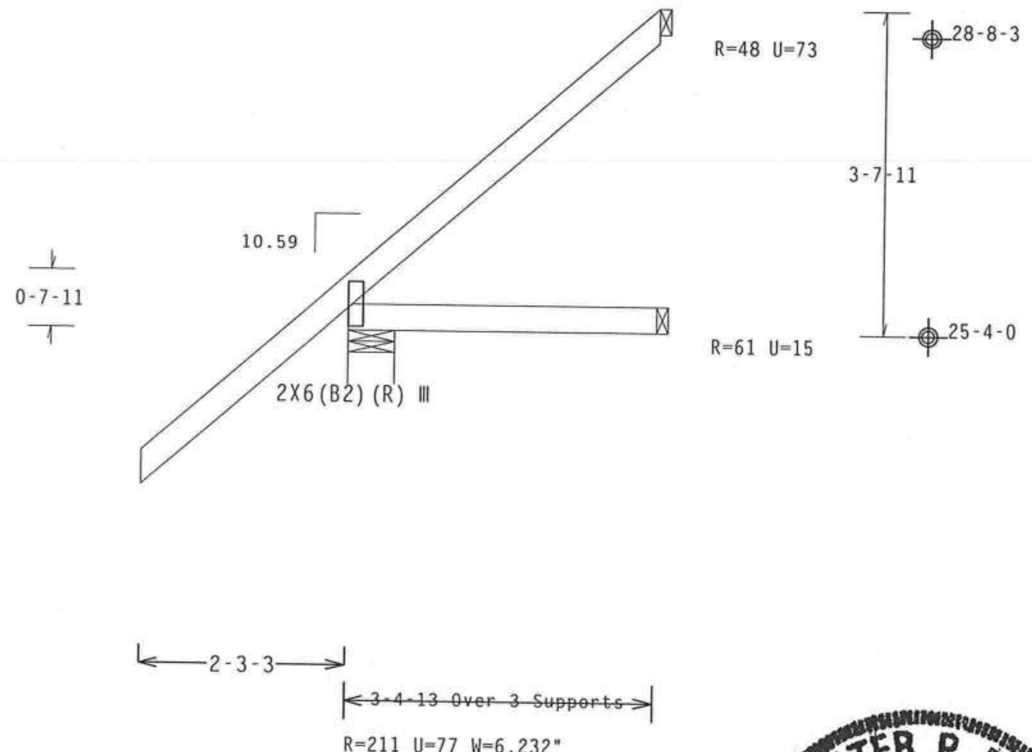

PLT TYP. Wave

Design Crit: FBC2010Res/TPI-2007(STD)
FT/RT=20%(0%)/10(0) 10.03.[illegible] QTY:2 FL/-/5/-/-/R/- Scale =.5"/Ft.

ALPINE
ITW Building Components Group Inc.
Haines City, FL 33844
FL COA #0 278

WARNING READ AND FOLLOW ALL NOTES ON THIS SHEET!
IMPORTANT FURNISH THIS DESIGN TO ALL CONTRACTORS INCLUDING INSTALLERS.

Trusses require extreme care in fabricating, handling, shipping, installing and bracing. Refer to and follow the latest edition of BCSI (Building Component Safety Information, by TPI and WTCA) for safety practices prior to performing these functions. Installers shall provide temporary bracing per BCSI. Unless noted otherwise, top chord shall have properly attached structural sheathing and bottom chord shall have a properly attached rigid ceiling. Locations shown for permanent lateral restraint of webs shall have bracing installed per BCSI sections B3, B7 or B10, as applicable.

ITW Building Components Group Inc. (ITWBCG) shall not be responsible for any deviation from this design, any failure to build the truss in conformance with ANSI/TPI 1, or for handling, shipping, installation & bracing of trusses. Apply plates to each face of truss and position as shown above and on the Joint Details, unless noted otherwise. Refer to drawings 160A-Z for standard plate positions. A seal on this drawing or cover page listing this drawing, indicates acceptance of professional engineering responsibility solely for the design shown. The suitability and use of this design for any structure is the responsibility of the Building Designer per ANSI/TPI 1 Sec.2. For more information see: This job's general notes page; ITW-BCG: www.itwbcg.com; TPI: www.tpinst.org; WTCA: www.sbcindustry.com; ICC: www.iccsafe.org

WALTER P. FINN
LICENSE
No.22839
STATE OF FLORIDA
PROFESSIONAL ENGINEER
07/19/2012

TC LL	20.0 PSF	REF	R215-- 20122
TC DL	10.0 PSF	DATE	07/19/12
BC DL	10.0 PSF	DRW	HCUSR215 12201023
BC LL	0.0 PSF	HC-ENG	DR/WPF
TOT.LD.	40.0 PSF	SEQN-	345278
DUR.FAC.	1.25	FROM	LRB
SPACING	24.0"	JREF-	1UNX215_Z01

(7819-/STEVE BECK ADDITION /OWNER BUILDER -- Columbia County, FL - J1)

THIS DWG PREPARED FROM COMPUTER INPUT (LOADS & DIMENSIONS) SUBMITTED BY TRUSS MFR.

Top chord 2x4 SP_#2_N__12A
Bot chord 2x4 SP_#2_N__12A

Lumber grades designated with "12A" use design values approved 1/5/2012 by ALSC.

Bottom chord checked for 10.00 psf non-concurrent live load.

The overall height of this truss excluding overhang is 2-5-9.

130 mph wind, 25.90 ft mean hgt, ASCE 7-10, CLOSED bldg, Located anywhere in roof, RISK CAT II, EXP C, wind TC DL=5.0 psf, wind BC DL=5.0 psf. GCpi(+/-)=0.18

Wind loads and reactions based on MWFRS with additional C&C member design.

Deflection meets L/240 live and L/180 total load. Creep increase factor for dead load is 1.50.

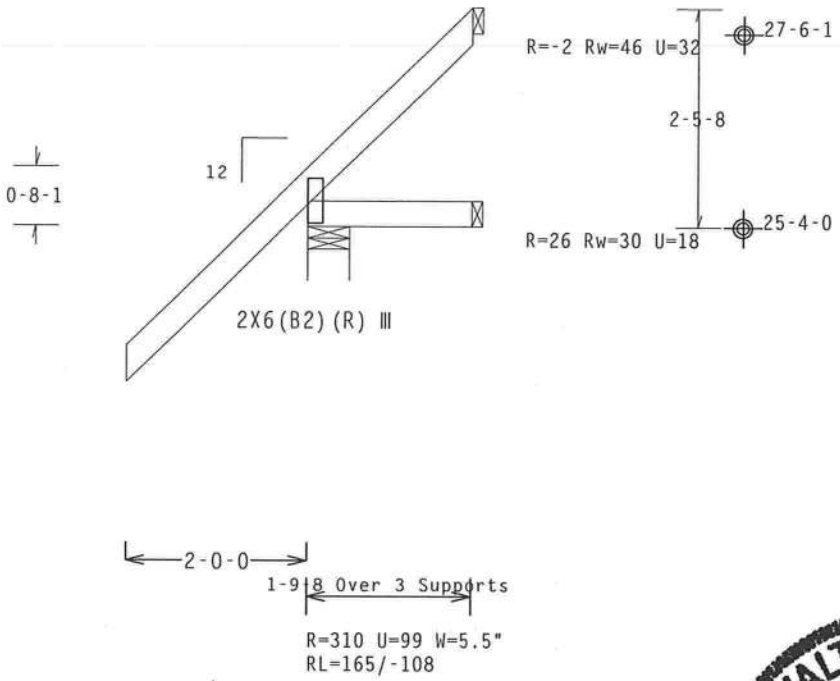

Design Crit: FBC2010Res/TPI-2007(STD) 10.03 11.0209 21 QTY 2

PLT TYP. Wave

FT/RT=20%(0%)/10(0)

FL/-/5/-/-/R/-

Scale =.5"/Ft.

ALPINE
ITW Building Components Group Inc.
Haines City, FL 33844
FL COA #0 278

WARNING READ AND FOLLOW ALL NOTES ON THIS SHEET!
IMPORTANT FURNISH THIS DESIGN TO ALL CONTRACTORS INCLUDING INSTALLERS.

Trusses require extreme care in fabricating, handling, shipping, installing and bracing. Refer to and follow the latest edition of BCSI (Building Component Safety Information, by TPI and WTCA) for safety practices prior to performing these functions. Installers shall provide temporary bracing per BCSI. Unless noted otherwise, top chord shall have properly attached structural sheathing and bottom chord shall have a properly attached rigid ceiling. Locations shown for permanent lateral restraint of web members shall have bracing installed per BCSI sections B3, B7 or B10, as applicable.

ITW Building Components Group Inc. (ITWBCG) shall not be responsible for any deviation from this design, any failure to build the truss in conformance with ANSI/TPI 1, or for handling, shipping, installing and bracing of trusses. Apply plates to each face of truss and position as shown above and on the Joint Details, unless noted otherwise. Refer to drawings 160A-Z for standard plate positions. A seal on this drawing or cover page listing this drawing, indicates acceptance of professional engineering responsibility solely for the design shown. The suitability and use of this design for any structure is the responsibility of the Building Designer per ANSI/TPI 1 Sec.2. For more information see: This job's general notes page; ITW-BCG: www.itwbcg.com; TPI: www.tpinst.org; WTCA: www.sbcindustry.com; ICC: www.iccsafe.org

WALTER P. FINN LICENSE No.22839 STATE OF FLORIDA PROFESSIONAL ENGINEER

07/19/2012

TC LL	20.0 PSF	REF	R215-- 20123
TC DL	10.0 PSF	DATE	07/19/12
BC DL	10.0 PSF	DRW	HCUSR215 12201022
BC LL	0.0 PSF	HC-ENG	DR/WPF
TOT.LD.	40.0 PSF	SEQN-	345276
DUR.FAC.	1.25	FROM	LRB
SPACING	24.0"	JREF-	1UNX215_Z01

(7819-/STEVE BECK ADDITION /OWNER BUILDER -- Columbia County, FL - J2)

THIS DWG PREPARED FROM COMPUTER INPUT (LOADS & DIMENSIONS) SUBMITTED BY TRUSS MFR.

Top chord 2x4 SP_#2_N__12A
Bot chord 2x4 SP_#2_N__12A

Lumber grades designated with "12A" use design values approved 1/5/2012 by ALSC.

Bottom chord checked for 10.00 psf non-concurrent live load.

The overall height of this truss excluding overhang is 3-8-0.

130 mph wind, 26.50 ft mean hgt, ASCE 7-10, CLOSED bldg, Located anywhere in roof, RISK CAT II, EXP C, wind TC DL=5.0 psf, wind BC DL=5.0 psf. GCpi(+/-)=0.18

Wind loads and reactions based on MWFRS with additional C&C member design.

Deflection meets L/240 live and L/180 total load. Creep increase factor for dead load is 1.50.

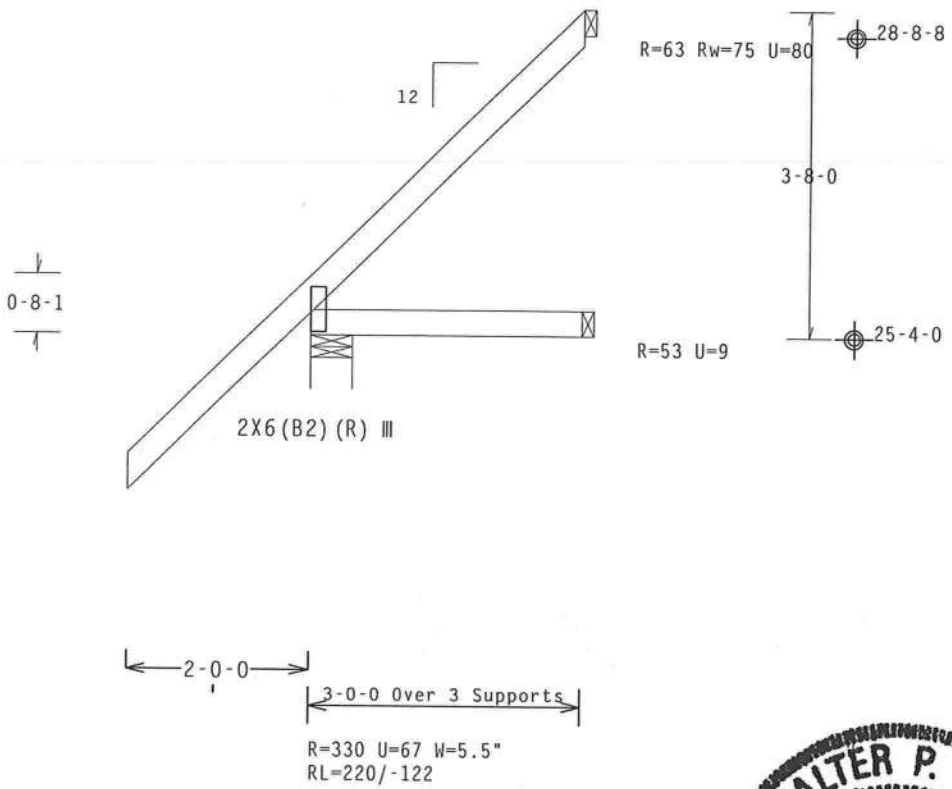

PLT TYP. Wave

Design Crit: FBC2010Res/TPI-2007(STD) 10.03 11.0209 21 QTY 3 FL/-/5/-/-/R/- Scale =.5"/Ft.
FT/RT=20%(0%)/10(0)

ALPINE
ITW Building Components Group Inc.
Haines City, FL 33844
FL COA #0 278

WARNING READ AND FOLLOW ALL NOTES ON THIS SHEET!
IMPORTANT FURNISH THIS DESIGN TO ALL CONTRACTORS INCLUDING INSTALLERS.

Trusses require extreme care in fabricating, handling, shipping, installing and bracing. Refer to and follow the latest edition of BCSI (Building Component Safety Information, by TPI and WTCA) for safety practices prior to performing these functions. Installers shall provide temporary bracing per BCSI. Unless noted otherwise, top chord shall have properly attached structural sheathing and bottom chord shall have a properly attached rigid ceiling. Locations shown for permanent lateral restraint of webs shall have bracing installed per BCSI sections B3, B7 or B10, as applicable.

ITW Building Components Group Inc. (ITWBCG) shall not be responsible for any deviation from this design, any failure to build the truss in conformance with ANSI/TPI 1, or for handling, shipping, installing and bracing of trusses. Apply plates to each face of truss and position as shown above and on the Joint Details, unless noted otherwise. Refer to drawings 160A-Z for standard plate positions. A seal on this drawing or cover page listing this drawing, indicates acceptance of professional engineering responsibility solely for the design shown. The suitability and use of this design for any structure is the responsibility of the Building Designer per ANSI/TPI 1 Sec.2. For more information see: This job's general notes page; ITW-BCG: www.itwbcg.com; TPI: www.tpinst.org; WTCA: www.sbcindustry.com; ICC: www.iccsafe.org

WALTER P. FINN LICENSE No.22839 STATE OF FLORIDA PROFESSIONAL ENGINEER

07/19/2012

TC LL	20.0 PSF	REF	R215-- 20124
TC DL	10.0 PSF	DATE	07/19/12
BC DL	10.0 PSF	DRW	HCUSR215 12201018
BC LL	0.0 PSF	HC-ENG	DR/WPF
TOT.LD.	40.0 PSF	SEQN-	345277
DUR.FAC.	1.25	FROM	LRB
SPACING	24.0"	JREF-	1UNX215_Z01

(7819-/STEVE BECK ADDITION /OWNER BUILDER -- Columbia County, FL - J3)

THIS DWG PREPARED FROM COMPUTER INPUT (LOADS & DIMENSIONS) SUBMITTED BY TRUSS MFR.

Top chord 2x4 SP_#2_N__12A
Bot chord 2x4 SP_#2_N__12A

Lumber grades designated with "12A" use design values approved 1/5/2012 by ALSC.

Bottom chord checked for 10.00 psf non-concurrent live load.

The overall height of this truss excluding overhang is 2-6-14.

130 mph wind, 25.95 ft mean hgt, ASCE 7-10, CLOSED bldg, Located anywhere in roof, RISK CAT II, EXP C, wind TC DL=5.0 psf, wind BC DL=5.0 psf. GCpi(+/-)=0.18

Wind loads and reactions based on MWFRS with additional C&C member design.

Deflection meets L/240 live and L/180 total load. Creep increase factor for dead load is 1.50.

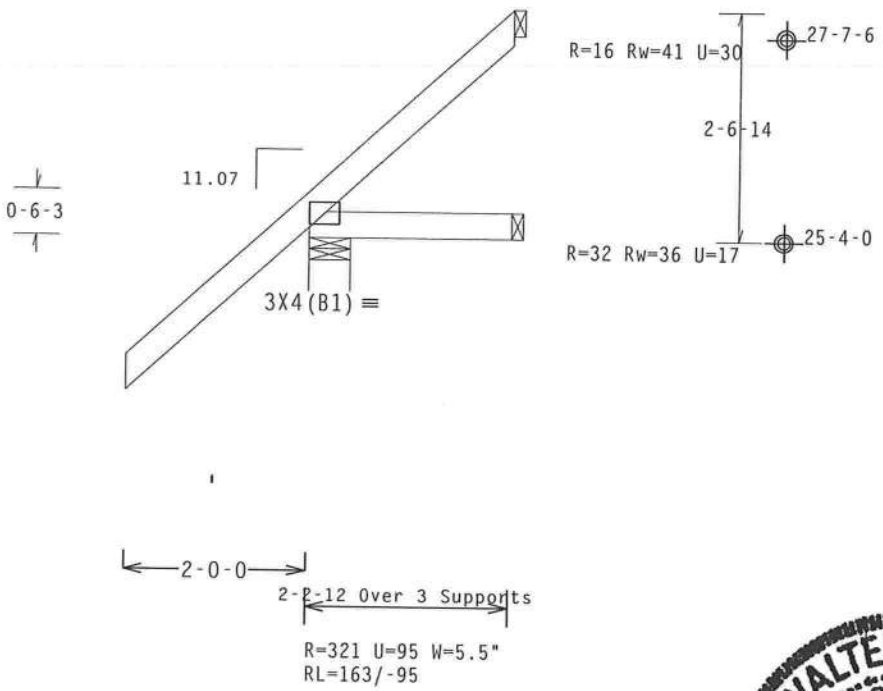

PLT TYP. Wave

Design Crit: FBC2010Res/TPI-2007(STD)
FT/RT=20%(0%)/10(0)

10.03.02 QTY:

FL/-/5/-/-/R/-

Scale =.5"/Ft.

TC LL	20.0 PSF	REF	R215-- 20125
TC DL	10.0 PSF	DATE	07/19/12
BC DL	10.0 PSF	DRW	HCUSR215 12201019
BC LL	0.0 PSF	HC-ENG	DR/WPF
TOT.LD.	40.0 PSF	SEQN-	345274
DUR.FAC.	1.25	FROM	LRB
SPACING	24.0"	JREF-	1UNX215_Z01

ALPINE
ITW Building Components Group Inc.
Haines City, FL 33844
FL COA #0 278

WARNING READ AND FOLLOW ALL NOTES ON THIS SHEET!
IMPORTANT FURNISH THIS DESIGN TO ALL CONTRACTORS INCLUDING INSTALLERS.

Trusses require extreme care in fabricating, handling, shipping, installing and bracing. Refer to and follow the latest edition of BCSI (Building Component Safety Information, by TPI and WTCA) for safety practices prior to performing these functions. Installers shall provide temporary bracing per BCSI. Unless noted otherwise, top chord shall have properly attached structural sheathing and bottom chord shall have a properly attached rigid ceiling. Locations shown for permanent lateral restraint of webs shall have bracing installed per BCSI sections B3, B7 or B10, as applicable.

ITW Building Components Group Inc. (ITWBCG) shall not be responsible for any deviation from this design, any failure to build the truss in conformance with ANSI/TPI 1, or for handling, shipping, installation and bracing of trusses. Apply plates to each face of truss and position as shown above and on the Joint Details, unless noted otherwise. Refer to drawings 160A-Z for standard plate positions. A seal on this drawing or cover page listing this drawing, indicates acceptance of professional engineering responsibility solely for the design shown. The suitability and use of this design for any structure is the responsibility of the Building Designer per ANSI/TPI 1 Sec.2. For more information see: This job's general notes page; ITW-BCG: www.itwbcg.com; TPI: www.tpinst.org; WTCA: www.sbcindustry.com; ICC: www.iccsafe.org

WALTER P. FINN
LICENSE
No. 22839
STATE OF FLORIDA
PROFESSIONAL ENGINEER

07/19/2012

(7819-/STEVE BECK ADDITION /OWNER BUILDER -- Columbia County, FL - J4)

THIS DWG PREPARED FROM COMPUTER INPUT (LOADS & DIMENSIONS) SUBMITTED BY TRUSS MFR.

Top chord 2x4 SP_#2_N__12A
Bot chord 2x4 SP_#2_N__12A

Lumber grades designated with "12A" use design values approved 1/5/2012 by ALSC.

Bottom chord checked for 10.00 psf non-concurrent live load.

The overall height of this truss excluding overhang is 1-5-8.

130 mph wind, 25.40 ft mean hgt, ASCE 7-10, CLOSED bldg, Located anywhere in roof, RISK CAT II, EXP C, wind TC DL=5.0 psf, wind BC DL=5.0 psf. GCpi(+/-)=0.18

Wind loads and reactions based on MWFRS with additional C&C member design.

Deflection meets L/240 live and L/180 total load. Creep increase factor for dead load is 1.50.

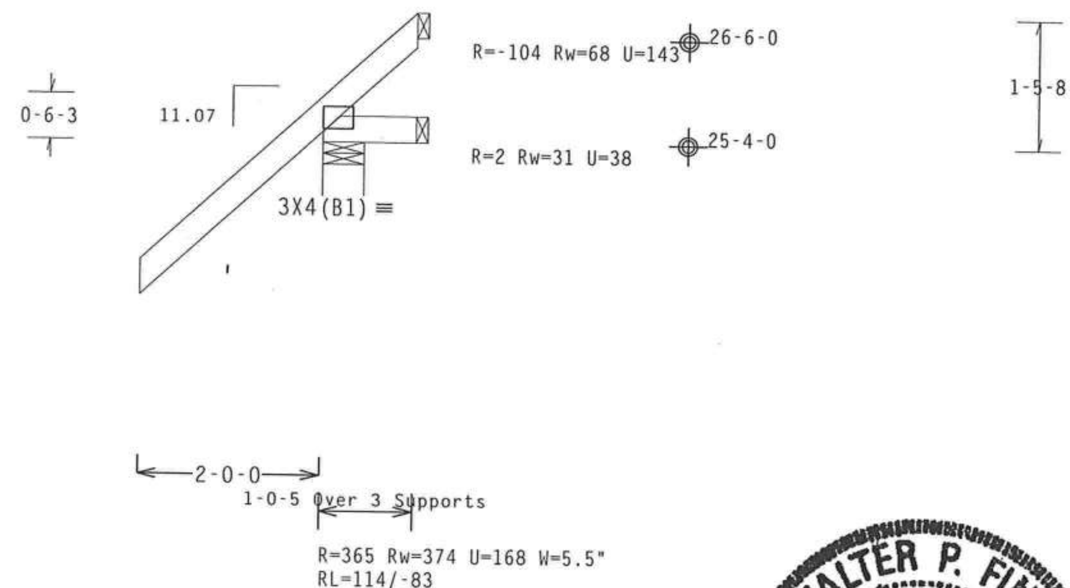

Design Crit: FBC2010Res/TPI-2007(STD)
FT/RT=20%(0%)/10(0)   10.03.   QTY:

PLT TYP. Wave

ALPINE
ITW Building Components Group Inc.
Haines City, FL 33844
FL COA #0 278

WARNING READ AND FOLLOW ALL NOTES ON THIS SHEET!
IMPORTANT FURNISH THIS DESIGN TO ALL CONTRACTORS INCLUDING INSTALLERS.

Trusses require extreme care in fabricating, handling, shipping, installing and bracing. Refer to and follow the latest edition of BCSI (Building Component Safety Information, by TPI and WTCA) for safety practices prior to performing these functions. Installers shall provide temporary bracing per BCSI. Unless noted otherwise, top chord shall have properly attached structural sheathing and bottom chord shall have a properly attached rigid ceiling. Locations shown for permanent lateral restraint of webs shall have bracing installed per BCSI sections B3, B7 or B10, as applicable.

ITW Building Components Group Inc. (ITWBCG) shall not be responsible for any deviation from this design, any failure to build the truss in conformance with ANSI/TPI 1, or for handling, shipping, installation & bracing of trusses. Apply plates to each face of truss and position as shown above and on the Joint Details, unless noted otherwise. Refer to drawings 160A-Z for standard plate positions. A seal on this drawing or cover page listing this drawing, indicates acceptance of professional engineering responsibility solely for the design shown. The suitability and use of this design for any structure is the responsibility of the Building Designer per ANSI/TPI 1 Sec.2. For more information see: This job's general notes page: ITW-BCG: www.itwbcg.com; TPI: www.tpinst.org; WTCA: www.sbcindustry.com; ICC: www.iccsafe.org

WALTER P. FINN LICENSE No. 22839 STATE OF FLORIDA PROFESSIONAL ENGINEER
07/19/2012

FL/-/5/-/-/R/-		
TC LL	20.0	PSF
TC DL	10.0	PSF
BC DL	10.0	PSF
BC LL	0.0	PSF
TOT.LD.	40.0	PSF
DUR.FAC.	1.25	
SPACING	24.0"	

Scale =.5"/Ft.	
REF	R215-- 20126
DATE	07/19/12
DRW	HCUSR215 12201020
HC-ENG	DR/WPF
SEQN-	345273
FROM	LRB
JREF-	1UNX215_Z01

(7819-/STEVE BECK ADDITION /OWNER BUILDER -- Columbia County, FL - J5)

THIS DWG PREPARED FROM COMPUTER INPUT (LOADS & DIMENSIONS) SUBMITTED BY TRUSS MFR.

Top chord 2x4 SP_#2_N__12A
Bot chord 2x4 SP_#2_N__12A

Lumber grades designated with "12A" use design values approved 1/5/2012 by ALSC.

Bottom chord checked for 10.00 psf non-concurrent live load.

The overall height of this truss excluding overhang is 3-5-1.

130 mph wind, 26.38 ft mean hgt, ASCE 7-10, CLOSED bldg, Located anywhere in roof, RISK CAT II, EXP C, wind TC DL=5.0 psf, wind BC DL=5.0 psf. GCpi(+/-)=0.18

Wind loads and reactions based on MWFRS with additional C&C member design.

Deflection meets L/240 live and L/180 total load. Creep increase factor for dead load is 1.50.

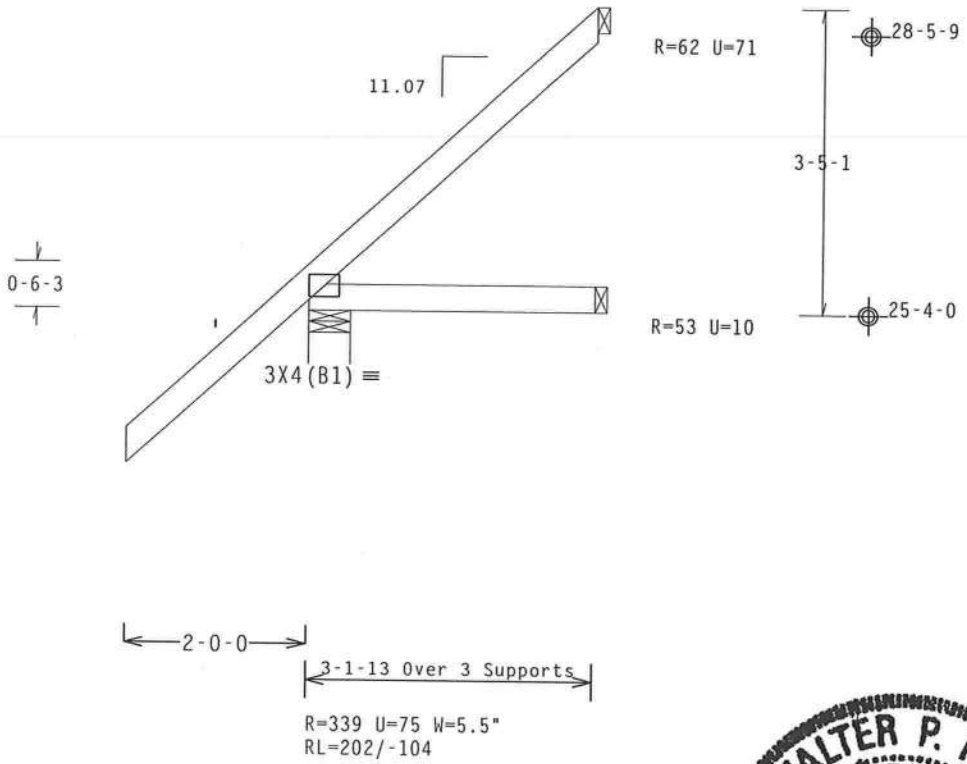

PLT TYP. Wave

Design Crit: FBC2010Res/TPI-2007(STD)
FT/RT=20%(0%)/10(0)

10.03.11.0209.21 QTY:2

FL/-/5/-/-/R/-

Scale =.5"/Ft.

ALPINE
ITW Building Components Group Inc.
Haines City, FL 33844
FL COA #0 278

WARNING READ AND FOLLOW ALL NOTES ON THIS SHEET!
IMPORTANT FURNISH THIS DESIGN TO ALL CONTRACTORS INCLUDING INSTALLERS.

Trusses require extreme care in fabricating, handling, shipping, installing and bracing. Refer to and follow the latest edition of BCSI (Building Component Safety Information, by TPI and WTCA) for safety practices prior to performing these functions. Installers shall provide temporary bracing per BCSI. Unless noted otherwise, top chord shall have properly attached structural sheathing and bottom chord shall have a properly attached rigid ceiling. Locations shown for permanent lateral restraint of webs shall have bracing installed per BCSI sections B3, B7 or B10, as applicable.

ITW Building Components Group Inc. (ITWBCG) shall not be responsible for any deviation from this design, any failure to build the truss in conformance with ANSI/TPI 1, or for handling, shipping, installing and bracing of trusses. Apply plates to each face of truss and position as shown above and on the Joint Details, unless noted otherwise. Refer to drawings 160A-Z for standard plate positions. A seal on this drawing or cover page listing this drawing, indicates acceptance of professional engineering responsibility solely for the design shown. The suitability and use of this design for any structure is the responsibility of the Building Designer per ANSI/TPI 1 Sec.2. For more information see: This job's general notes page; ITW-BCG: www.itwbcg.com; TPI: www.tpinst.org; WTCA: www.sbcindustry.com; ICC: www.iccsafe.org

WALTER P. FINN
LICENSE
No.22839
STATE OF FLORIDA
PROFESSIONAL ENGINEER

07/19/2012

TC LL	20.0 PSF	REF	R215-- 20127
TC DL	10.0 PSF	DATE	07/19/12
BC DL	10.0 PSF	DRW	HCUSR215 12201021
BC LL	0.0 PSF	HC-ENG	DR/WPF
TOT.LD.	40.0 PSF	SEQN-	345275
DUR.FAC.	1.25	FROM	LRB
SPACING	24.0"	JREF-	1UNX215_Z01

(7819-/STEVE BECK ADDITION /OWNER BUILDER -- Columbia County, FL - M1)

THIS DWG PREPARED FROM COMPUTER INPUT (LOADS & DIMENSIONS) SUBMITTED BY TRUSS MFR.

Top chord 2x4 SP_#2_N__12A :T2 2x6 SP_#2_N_12A:
Bot chord 2x6 SP_#2_N_12A
Webs 2x4 SP_#2_N__12A

Lumber grades designated with "12A" use design values approved 1/5/2012 by ALSC.

Special loads
------(Lumber Dur.Fac.=1.25 / Plate Dur.Fac.=1.25)
TC- From 64 plf at -2.89 to 64 plf at 1.45
TC- From 32 plf at 1.45 to 32 plf at 4.84
TC- From 32 plf at 4.84 to 32 plf at 11.31
TC- From 32 plf at 11.31 to 32 plf at 14.69
TC- From 64 plf at 14.69 to 64 plf at 19.04
BC- From 5 plf at -2.89 to 5 plf at 0.00
BC- From 10 plf at 0.00 to 10 plf at 16.15
BC- From 5 plf at 16.15 to 5 plf at 19.04
TC- -47.47 lb Conc. Load at 1.45,14.69
TC- 15.75 lb Conc. Load at 3.15,12.99
TC- 47.58 lb Conc. Load at 4.85,11.31
TC- 63.34 lb Conc. Load at 6.26, 8.07, 9.88
BC- 0.86 lb Conc. Load at 1.45,14.69
BC- 32.48 lb Conc. Load at 3.15,12.99
BC- 60.89 lb Conc. Load at 4.85,11.31
BC- 52.61 lb Conc. Load at 6.26, 8.07, 9.88

2 COMPLETE TRUSSES REQUIRED

Nail Schedule:0.131"x3", min. nails
Top Chord: 1 Row @12.00" o.c.
Bot Chord: 1 Row @12.00" o.c.
Webs : 1 Row @ 4" o.c.
Use equal spacing between rows and stagger nails in each row to avoid splitting.

130 mph wind, 26.48 ft mean hgt, ASCE 7-10, CLOSED bldg, not located within 4.50 ft from roof edge, RISK CAT II, EXP C, wind TC DL=5.0 psf, wind BC DL=5.0 psf. GCpi(+/-)=0.18

Wind loads and reactions based on MWFRS with additional C&C member design.

In lieu of structural panels use purlins to brace all flat TC @ 24" OC.

Bottom chord checked for 10.00 psf non-concurrent live load.

Deflection meets L/240 live and L/180 total load. Creep increase factor for dead load is 1.50.

The overall height of this truss excluding overhang is 3-8-0.

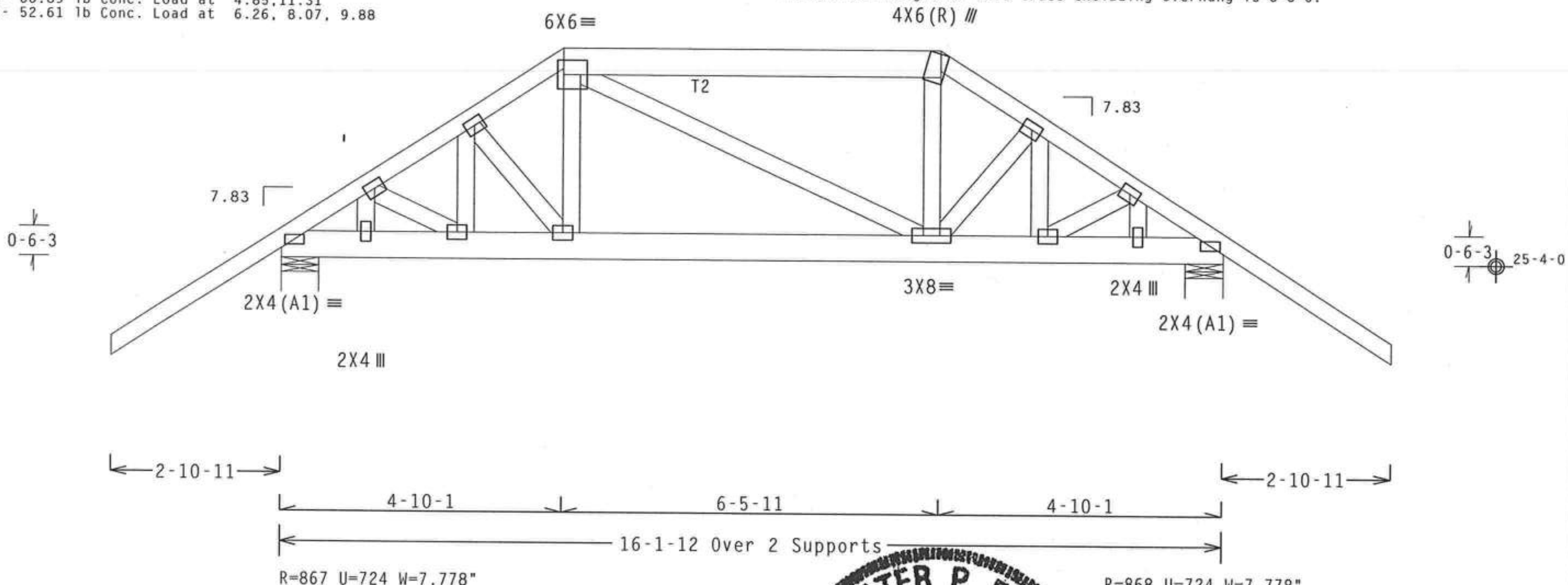

Note: All Plates Are 3X4 Except As Shown.

Design Crit: FBC2010Res/TPI-2007(STD)

PLT TYP. Wave

FT/RT=20%(0%)/10(0) 10.03.[illegible] QTY:1 FL/-/5/-/-/R/-

Scale =.375"/Ft.

ALPINE

ITW Building Components Group Inc.
Haines City, FL 33844
FL COA #0 278

IMPORTANT **WARNING** READ AND FOLLOW ALL NOTES ON THIS SHEET! FURNISH THIS DESIGN TO ALL CONTRACTORS INCLUDING INSTALLERS.

Trusses require extreme care in fabricating, handling, shipping, installing and bracing. [illegible] follow the latest edition of BCSI (Building Component Safety Information, by TPI and WTCA) [illegible] safety practices prior to performing these functions. Installers shall provide temporary bracing [illegible] BCSI. Unless noted otherwise, top chord shall have properly attached structural sheathing and bott[illegible] shall have a properly attached rigid ceiling. Locations shown for permanent lateral restrain[illegible] shall have bracing installed per BCSI sections B3, B7 or B10, as applicable.

ITW Building Components Group Inc. (ITWBCG) shall not be responsible for any deviation from th[illegible] any failure to build the truss in conformance with ANSI/TPI 1, or for handling, shipping, install[illegible] bracing of trusses. Apply plates to each face of truss and position as shown above and on the Joi[illegible] Details, unless noted otherwise. Refer to drawings 160A-Z for standard plate positions. A seal on [illegible] drawing or cover page listing this drawing, indicates acceptance of professional engineering responsibility solely for the design shown. The suitability and use of this design for any structure is the responsibility of the Building Designer per ANSI/TPI 1 Sec.2. For more information see: This job's general notes page: ITW-BCG: www.itwbcg.com; TPI: www.tpinst.org; WTCA: www.sbcindustry.com; ICC: www.iccsafe.org

WALTER P. FINN LICENSE No.22839 STATE OF FLORIDA PROFESSIONAL ENGINEER

07/19/2012

TC LL	20.0 PSF	REF	R215-- 20128
TC DL	10.0 PSF	DATE	07/19/12
BC DL	10.0 PSF	DRW	HCUSR215 12201024
BC LL	0.0 PSF	HC-ENG	DR/WPF
TOT.LD.	40.0 PSF	SEQN-	345293
DUR.FAC.	1.25	FROM	LRB
SPACING	24.0"	JREF-	1UNX215_Z01

(7819-/STEVE BECK ADDITION /OWNER BUILDER -- Columbia County, FL - M2)

THIS DWG PREPARED FROM COMPUTER INPUT (LOADS & DIMENSIONS) SUBMITTED BY TRUSS MFR.

Top chord 2x4 SP_#2_N__12A
Bot chord 2x4 SP_#2_N__12A
Webs 2x4 SP_#2_N__12A

Lumber grades designated with "12A" use design values approved 1/5/2012 by ALSC.

130 mph wind, 18.22 ft mean hgt, ASCE 7-10, CLOSED bldg, Located anywhere in roof, RISK CAT II, EXP C, wind TC DL=5.0 psf, wind BC DL=5.0 psf. GCpi(+/-)=0.18

Wind loads and reactions based on MWFRS with additional C&C member design.

The overall height of this truss excluding overhang is 4-10-5.

Special loads
------(Lumber Dur.Fac.=1.25 / Plate Dur.Fac.=1.25)
TC- From 62 plf at 0.00 to 62 plf at 3.90
TC- From 62 plf at 3.90 to 62 plf at 7.80
BC- From 21 plf at 0.00 to 21 plf at 3.90
BC- From 21 plf at 3.90 to 21 plf at 7.80

End verticals not exposed to wind pressure.

Bottom chord checked for 10.00 psf non-concurrent live load.

Deflection meets L/240 live and L/180 total load. Creep increase factor for dead load is 1.50.

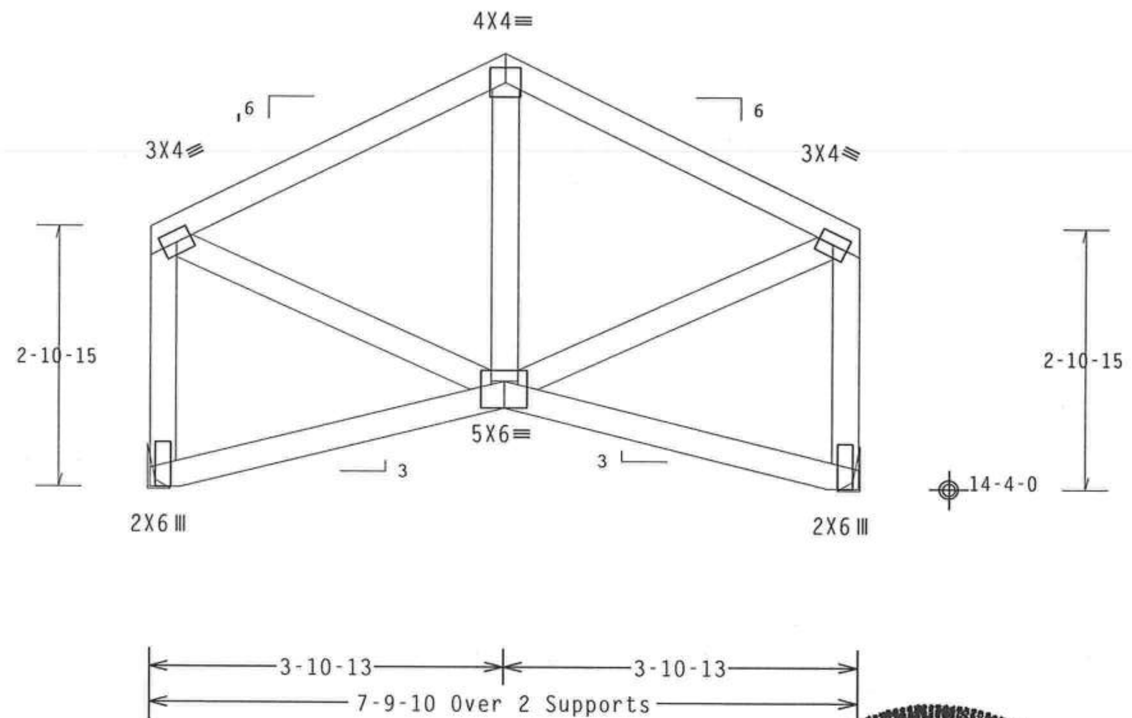

R=324 U=70
RL=49/-49
H=H1

R=324
H=H2

PLT TYP. Wave

Design Crit: FBC2010Res/TPI-2007(STD)
FT/RT=20%(0%)/10(0) 10.03. QTY:

FL/-/5/-/-/R/- Scale =.5"/Ft.

ALPINE
ITW Building Components Group Inc.
Haines City, FL 33844
FL COA #0 278

WARNING READ AND FOLLOW ALL NOTES ON THIS SHEET!
IMPORTANT FURNISH THIS DESIGN TO ALL CONTRACTORS INCLUDING INSTALLERS.

Trusses require extreme care in fabricating, handling, shipping, installing and bracing. Refer to and follow the latest edition of BCSI (Building Component Safety Information, by TPI and WTCA) for safety practices prior to performing these functions. Installers shall provide temporary bracing per BCSI. Unless noted otherwise, top chord shall have properly attached structural sheathing and bottom chord shall have a properly attached rigid ceiling. Locations shown for permanent lateral restraint of webs shall have bracing installed per BCSI sections B3, B7 or B10, as applicable.

ITW Building Components Group Inc. (ITWBCG) shall not be responsible for any deviation from this design; any failure to build the truss in conformance with ANSI/TPI 1, or for handling, shipping, installation & bracing of trusses. Apply plates to each face of truss and position as shown above and on the Joint Details, unless noted otherwise. Refer to drawings 160A-Z for standard plate positions. A seal on this drawing or cover page listing this drawing, indicates acceptance of professional engineering responsibility solely for the design shown. The suitability and use of this design for any structure is the responsibility of the Building Designer per ANSI/TPI 1 Sec.2. For more information see: This job's general notes page: ITW-BCG: www.itwbcg.com; TPI: www.tpinst.org; WTCA: www.sbcindustry.com; ICC: www.iccsafe.org

WALTER P. FINN
LICENSE
No. 22839
STATE OF FLORIDA
PROFESSIONAL ENGINEER
07/19/2012

TC LL	20.0 PSF	REF	R215-- 20129
TC DL	10.0 PSF	DATE	07/19/12
BC DL	10.0 PSF	DRW	HCUSR215 12201004
BC LL	0.0 PSF	HC-ENG	DR/WPF
TOT.LD.	40.0 PSF	SEQN-	251194
DUR.FAC.	1.25	FROM	CDM
SPACING	24.0"	JREF-	1UNX215_Z01

(7819-/STEVE BECK ADDITION /OWNER BUILDER -- Columbia County, FL - M4)

THIS DWG PREPARED FROM COMPUTER INPUT (LOADS & DIMENSIONS) SUBMITTED BY TRUSS MFR.

Top chord 2x4 SP_#2_N__12A
Bot chord 2x6 SP_#2_N_12A
Webs 2x6 SP_#2_N_12A :W2, W4 2x4 SP_#2_N__12A:

Lumber grades designated with "12A" use design values approved 1/5/2012 by ALSC.

Special loads
------(Lumber Dur.Fac.=1.25 / Plate Dur.Fac.=1.25)
TC- From 60 plf at 0.00 to 60 plf at 9.54
BC- From 20 plf at 0.00 to 20 plf at 9.54
BC- 325.00 lb Conc. Load at 1.67, 3.67, 5.67, 7.67

Wind loads and reactions based on MWFRS with additional C&C member design.

Deflection meets L/240 live and L/180 total load. Creep increase factor for dead load is 1.50.

The overall height of this truss excluding overhang is 2-10-3.

MWFRS loads based on trusses located at least 8.59 ft. from roof edge.

130 mph wind, 17.18 ft mean hgt, ASCE 7-10, CLOSED bldg, not located within 9.00 ft from roof edge, RISK CAT II, EXP C, wind TC DL=5.0 psf, wind BC DL=5.0 psf. GCpi(+/-)=0.18

End verticals not exposed to wind pressure.

Hanger specified assumes connection to supporting chord is located a minimum of five times the depth of the supporting chord from any unsupported end, unless unsupported chord end has 85% plating coverage.

Bottom chord checked for 10.00 psf non-concurrent live load.

Truss must be installed as shown with top chord up.

The TC of this truss shall be braced with attached spans at 24" OC in lieu of structural sheathing.

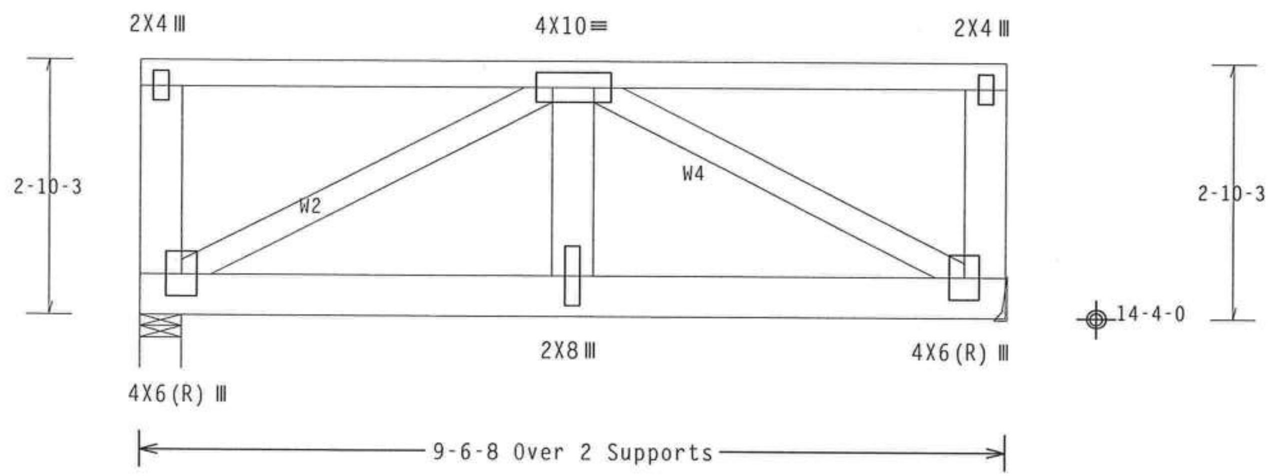

R=1017 U=233 H=ITW (KC) ATH29
Supported Member Face: (4) 0.131"x1.5" nails
Supporting Member Face: (4) 0.128"x3" nails
Supporting Member Top: (4) 0.128"x3" nails
Supporting Member: (2) 2x6 SP_SS_12A

R=1046 U=240 W=5.5"

Design Crit: FBC2010Res/TPI-2007(STD)
FT/RT=20%(0%)/10(0) 10.03.11.0909.21 QTY:2 FL/-/5/-/-/R/-

PLT TYP. Wave

Scale =.5"/Ft.

ALPINE
ITW Building Components Group Inc.
Haines City, FL 33844
FL COA #0 278

IMPORTANT **WARNING** READ AND FOLLOW ALL NOTES ON THIS SHEET! FURNISH THIS DESIGN TO ALL CONTRACTORS INCLUDING INSTALLERS.

Trusses require extreme care in fabricating, handling, shipping, installing and bracing. Refer to and follow the latest edition of BCSI (Building Component Safety Information, by TPI and WTCA) for safety practices prior to performing these functions. Installers shall provide temporary bracing per BCSI. Unless noted otherwise, top chord shall have properly attached structural sheathing and bottom chord shall have a properly attached rigid ceiling. Locations shown for permanent lateral restraint of webs shall have bracing installed per BCSI sections B3, B7 or B10, as applicable.

ITW Building Components Group Inc. (ITWBCG) shall not be responsible for any deviation from this design, any failure to build the truss in conformance with ANSI/TPI 1, or for handling, shipping, installation & bracing of trusses. Apply plates to each face of truss and position as shown above and on the Joint Details, unless noted otherwise. Refer to drawings 160A-Z for standard plate positions. A seal on this drawing or cover page listing this drawing, indicates acceptance of professional engineering responsibility solely for the design shown. The suitability and use of this design for any structure is the responsibility of the Building Designer per ANSI/TPI 1 Sec.2. For more information see: This job's general notes page; ITW-BCG: www.itwbcg.com; TPI: www.tpinst.org; WTCA: www.sbcindustry.com; ICC: www.iccsafe.org

WALTER P. FINN LICENSE No. 22839 STATE OF FLORIDA PROFESSIONAL ENGINEER

07/19/2012

TC LL	20.0	PSF
TC DL	10.0	PSF
BC DL	10.0	PSF
BC LL	0.0	PSF
TOT.LD.	40.0	PSF
DUR.FAC.	1.25	
SPACING	24.0"	

REF	R215-- 20130
DATE	07/19/12
DRW	HCUSR215 12201005
HC-ENG	DR/WPF
SEQN-	251204
FROM	CDM
JREF-	1UNX215_Z01

THIS DWG PREPARED FROM COMPUTER INPUT (LOADS & DIMENSIONS) SUBMITTED BY TRUSS MFR.

Top chord 2x4 SP_#2_N__12A
Bot chord 2x4 SP_#2_N__12A
Webs 2x4 SP_#2_N__12A

Lumber grades designated with "12A" use design values approved 1/5/2012 by ALSC.

See DWGS A14030ENC100212 & GBLLETIN0212 for more requirements.

Bottom chord checked for 10.00 psf non-concurrent live load.

The overall height of this truss excluding overhang is 4-2-4.

130 mph wind, 25.57 ft mean hgt, ASCE 7-10, CLOSED bldg, Located anywhere in roof, RISK CAT II, EXP C, wind TC DL=5.0 psf, wind BC DL=5.0 psf. GCpi(+/-)=0.18

Wind loads and reactions based on MWFRS with additional C&C member design.

Right end vertical not exposed to wind pressure.

Deflection meets L/240 live and L/180 total load. Creep increase factor for dead load is 1.50.

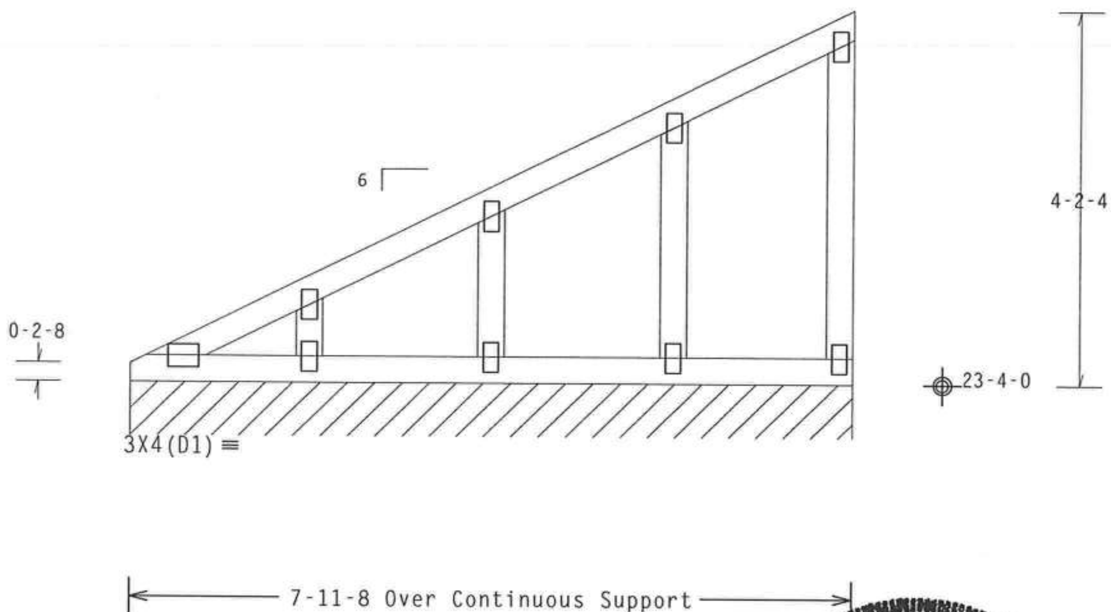

R=82 PLF U=27 PLF W=7-11-8
RL=20 PLF

Note: All Plates Are 2X4 Except As Shown.

Design Crit: FBC2010Res/TPI-2007(STD)
FT/RT=20%(0%)/10(0) 10.03.1 QTY:

PLT TYP. Wave

ALPINE
ITW Building Components Group Inc.
Haines City, FL 33844
FL COA #0 278

WARNING READ AND FOLLOW ALL NOTES ON THIS SHEET!
IMPORTANT FURNISH THIS DESIGN TO ALL CONTRACTORS INCLUDING INSTALLERS.

Trusses require extreme care in fabricating, handling, shipping, installing and bracing. Refer to and follow the latest edition of BCSI (Building Component Safety Information, by TPI and WTCA) for safety practices prior to performing these functions. Installers shall provide temporary bracing per BCSI. Unless noted otherwise, top chord shall have properly attached structural sheathing and bottom chord shall have a properly attached rigid ceiling. Locations shown for permanent lateral restraint of webs shall have bracing installed per BCSI sections B3, B7 or B10, as applicable.

ITW Building Components Group Inc. (ITWBCG) shall not be responsible for any deviation from this design, any failure to build the truss in conformance with ANSI/TPI 1, or for handling, shipping, installation & bracing of trusses. Apply plates to each face of truss and position as shown above and on the Joint Details, unless noted otherwise. Refer to drawings 160A-Z for standard plate positions. A seal on this drawing or cover page listing this drawing, indicates acceptance of professional engineering responsibility solely for the design shown. The suitability and use of this design for any structure is the responsibility of the Building Designer per ANSI/TPI 1 Sec.2. For more information see: This job's general notes page; ITW-BCG: www.itwbcg.com; TPI: www.tpinst.org; WTCA: www.sbcindustry.com; ICC: www.iccsafe.org

WALTER P. FINN LICENSE No. 22839 STATE OF FLORIDA PROFESSIONAL ENGINEER
07/19/2012

FL/-/5/-/-/R/-		Scale =.5"/Ft.
TC LL	20.0 PSF	REF R215-- 20131
TC DL	10.0 PSF	DATE 07/19/12
BC DL	10.0 PSF	DRW HCUSR215 12201025
BC LL	0.0 PSF	HC-ENG DR/WPF
TOT.LD.	40.0 PSF	SEQN- 251173
DUR.FAC.	1.25	FROM LRB
SPACING	24.0"	JREF- 1UNX215_Z01

(7819-/STEVE BECK ADDITION /OWNER BUILDER -- Columbia County, FL - M3)

THIS DWG PREPARED FROM COMPUTER INPUT (LOADS & DIMENSIONS) SUBMITTED BY TRUSS MFR.

Top chord 2x4 SP_#2_N__12A
Bot chord 2x4 SP_#2_N__12A
Webs 2x4 SP_#2_N__12A

Lumber grades designated with "12A" use design values approved 1/5/2012 by ALSC.

End verticals not exposed to wind pressure.

Gable end supports 8" max rake overhang.

Bottom chord checked for 10.00 psf non-concurrent live load.

Fasten rated sheathing to one face of this frame.

130 mph wind, 17.89 ft mean hgt, ASCE 7-10, CLOSED bldg, Located anywhere in roof, RISK CAT II, EXP C, wind TC DL=5.0 psf, wind BC DL=5.0 psf. GCpi(+/-)=0.18

Wind loads and reactions based on MWFRS with additional C&C member design.

Left and right cantilevers are exposed to wind

See DWGS A14030ENC100212 & GBLLETIN0212 for more requirements.

Deflection meets L/240 live and L/180 total load. Creep increase factor for dead load is 1.50.

The overall height of this truss excluding overhang is 4-6-6.

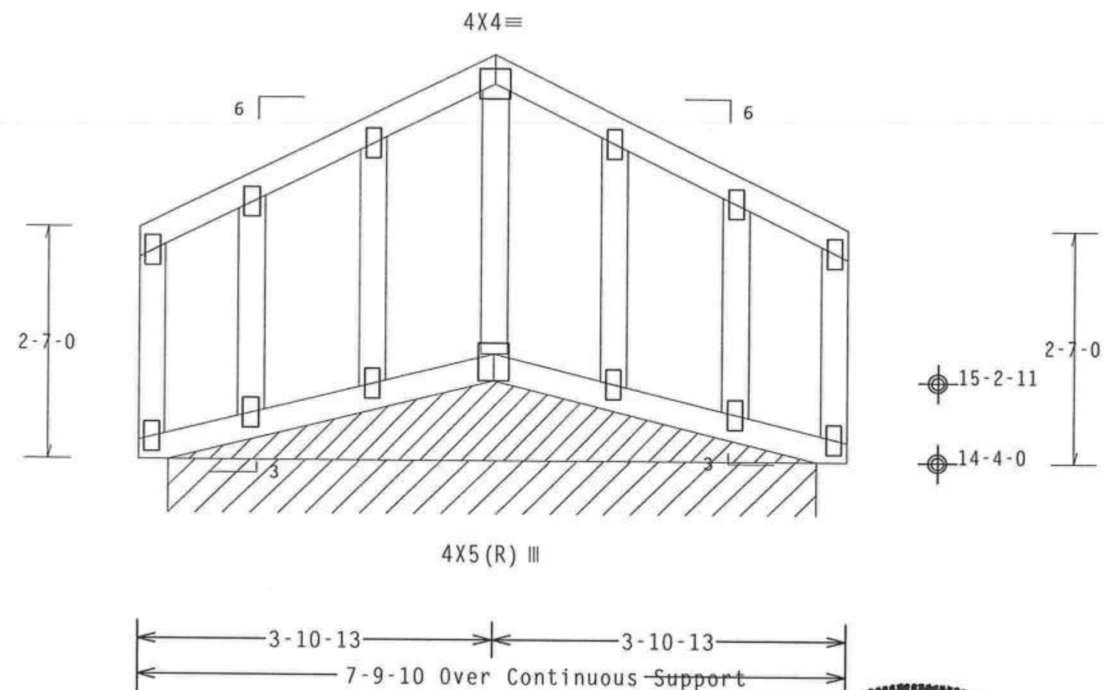

R=89 PLF U=19 PLF W=7-1-10
RL=8/-8 PLF

Note: All Plates Are 2X4 Except As Shown.

Design Crit: FBC2010Res/TPI-2007(STD)
FT/RT=20%(0%)/10(0)

PLT TYP. Wave

10.03.11.0308.21 QTY:1 FL/-/5/-/-/R/- Scale =.5"/Ft.

ALPINE
ITW Building Components Group Inc.
Haines City, FL 33844
FL COA #0 278

WARNING READ AND FOLLOW ALL NOTES ON THIS SHEET!
IMPORTANT FURNISH THIS DESIGN TO ALL CONTRACTORS INCLUDING INSTALLERS.

Trusses require extreme care in fabricating, handling, shipping, installing and bracing. Refer to and follow the latest edition of BCSI (Building Component Safety Information, by TPI and WTCA) for safety practices prior to performing these functions. Installers shall provide temporary bracing per BCSI. Unless noted otherwise, top chord shall have properly attached structural sheathing and bottom chord shall have a properly attached rigid ceiling. Locations shown for permanent lateral restraint of webs shall have bracing installed per BCSI sections B3, B7 or B10, as applicable.

ITW Building Components Group Inc. (ITWBCG) shall not be responsible for any deviation from this design, any failure to build the truss in conformance with ANSI/TPI 1, or for handling, shipping, installation & bracing of trusses. Apply plates to each face of truss and position as shown above and on the Joint Details, unless noted otherwise. Refer to drawings 160A-Z for standard plate positions. A seal on this drawing or cover page listing this drawing, indicates acceptance of professional engineering responsibility solely for the design shown. The suitability and use of this design for any structure is the responsibility of the Building Designer per ANSI/TPI 1 Sec.2. For more information see: This job's general notes page: ITW-BCG: www.itwbcg.com; TPI: www.tpinst.org; WTCA: www.sbcindustry.com; ICC: www.iccsafe.org

WALTER P. FINN LICENSE No. 22839 STATE OF FLORIDA PROFESSIONAL ENGINEER

07/19/2012

TC LL	20.0 PSF	REF	R215-- 20132
TC DL	10.0 PSF	DATE	07/19/12
BC DL	10.0 PSF	DRW	HCUSR215 12201006
BC LL	0.0 PSF	HC-ENG	DR/WPF
TOT.LD.	40.0 PSF	SEQN-	345307
DUR.FAC.	1.25	FROM	CDM
SPACING	24.0"	JREF-	1UNX215_Z01

Gable Stud Reinforcement Detail

ASCE 7-10: 140 mph Wind Speed, 30' Mean Height, Enclosed, Exposure C, Kzt = 1.00

Or: 120 mph Wind Speed, 30' Mean Height, Partially Enclosed, Exposure C, Kzt = 1.00
Or: 120 mph Wind Speed, 30' Mean Height, Enclosed, Exposure D, Kzt = 1.00
Or: 100 mph wind speed, 30' Mean Height, Partially Enclosed, Exposure D, Kzt = 1.00

Max Gable Vertical Length

2x4 Gable Vertical Spacing	Species	Brace Grade	No Braces	(1) 1x4 "L" Brace *		(1) 2x4 "L" Brace *		(2) 2x4 "L" Brace **		(1) 2x6 "L" Brace *		(2) 2x6 "L" Brace **	
				Group A	Group B	Group A	Group B	Group A	Group B	Group A	Group B	Group A	Group B
24" o.c.	SPF HF	#1 / #2	4' 1"	6' 11"	7' 2"	8' 2"	8' 6"	9' 9"	10' 2"	12' 10"	13' 4"	14' 0"	14' 0"
		#3	3' 10"	6' 2"	6' 7"	8' 1"	8' 5"	9' 8"	10' 0"	12' 8"	13' 2"	14' 0"	14' 0"
		Stud	3' 10"	6' 10"	7' 1"	8' 1"	8' 5"	9' 8"	10' 0"	12' 8"	13' 2"	14' 0"	14' 0"
		Standard	3' 10"	6' 5"	6' 10"	8' 1"	8' 5"	9' 8"	10' 0"	12' 8"	13' 2"	14' 0"	14' 0"
	SP DFL	#1	4' 2"	7' 0"	7' 3"	8' 3"	8' 7"	9' 9"	10' 2"	12' 11"	13' 5"	14' 0"	14' 0"
		#2	4' 1"	6' 10"	7' 2"	8' 2"	8' 6"	9' 9"	10' 2"	12' 10"	13' 4"	14' 0"	14' 0"
		#3	3' 10"	5' 6"	5' 10"	7' 4"	7' 10"	9' 8"	10' 0"	11' 6"	12' 4"	14' 0"	14' 0"
		Stud	3' 10"	5' 6"	5' 10"	7' 4"	7' 10"	9' 8"	10' 0"	11' 6"	12' 4"	14' 0"	14' 0"
		Standard	3' 8"	4' 9"	5' 1"	6' 4"	6' 10"	8' 7"	9' 3"	10' 0"	10' 8"	13' 7"	14' 0"
16" o.c.	SPF HF	#1 / #2	4' 8"	7' 11"	8' 3"	9' 4"	9' 9"	11' 2"	11' 7"	14' 0"	14' 0"	14' 0"	14' 0"
		#3	4' 5"	7' 6"	8' 3"	9' 3"	9' 7"	11' 0"	11' 6"	14' 0"	14' 0"	14' 0"	14' 0"
		Stud	4' 5"	7' 10"	8' 1"	9' 3"	9' 7"	11' 0"	11' 6"	14' 0"	14' 0"	14' 0"	14' 0"
		Standard	4' 5"	7' 10"	8' 1"	9' 3"	9' 7"	11' 0"	11' 6"	14' 0"	14' 0"	14' 0"	14' 0"
	SP DFL	#1	4' 9"	8' 0"	8' 3"	9' 5"	9' 9"	11' 2"	11' 8"	14' 0"	14' 0"	14' 0"	14' 0"
		#2	4' 8"	7' 11"	8' 3"	9' 4"	9' 9"	11' 2"	11' 7"	14' 0"	14' 0"	14' 0"	14' 0"
		#3	4' 5"	6' 9"	7' 2"	9' 0"	9' 7"	11' 0"	11' 6"	14' 0"	14' 0"	14' 0"	14' 0"
		Stud	4' 5"	6' 9"	7' 2"	9' 0"	9' 7"	11' 0"	11' 6"	14' 0"	14' 0"	14' 0"	14' 0"
		Standard	4' 5"	5' 10"	6' 3"	7' 9"	8' 4"	10' 6"	11' 3"	12' 3"	13' 1"	14' 0"	14' 0"
12" o.c.	SPF HF	#1 / #2	5' 2"	8' 9"	9' 1"	10' 4"	10' 9"	11' 2"	12' 9"	14' 0"	14' 0"	14' 0"	14' 0"
		#3	4' 10"	8' 7"	8' 11"	10' 2"	10' 7"	12' 2"	12' 8"	14' 0"	14' 0"	14' 0"	14' 0"
		Stud	4' 10"	8' 7"	8' 11"	10' 2"	10' 7"	12' 2"	12' 8"	14' 0"	14' 0"	14' 0"	14' 0"
		Standard	4' 10"	8' 7"	8' 11"	10' 2"	10' 7"	12' 2"	12' 8"	14' 0"	14' 0"	14' 0"	14' 0"
	SP DFL	#1	5' 3"	8' 9"	9' 1"	10' 4"	10' 9"	12' 4"	12' 10"	14' 0"	14' 0"	14' 0"	14' 0"
		#2	5' 2"	8' 9"	9' 1"	10' 4"	10' 9"	12' 3"	12' 9"	14' 0"	14' 0"	14' 0"	14' 0"
		#3	4' 10"	7' 9"	8' 3"	10' 2"	10' 7"	12' 2"	12' 8"	14' 0"	14' 0"	14' 0"	14' 0"
		Stud	4' 10"	7' 9"	8' 3"	10' 2"	10' 7"	12' 2"	12' 8"	14' 0"	14' 0"	14' 0"	14' 0"
		Standard	4' 10"	6' 9"	7' 2"	9' 0"	9' 7"	12' 2"	12' 8"	14' 0"	14' 0"	14' 0"	14' 0"

Bracing Group Species and Grades:

Group A:

Spruce-Pine-Fir

#1 / #2	Standard
#3	Stud

Hem-Fir

#2	Stud
#3	Standard

Douglas Fir-Larch

#3
Stud
Standard

Southern Pine***

#3
Stud
Standard

Group B:

Hem-Fir

#1 & Btr
#1

Douglas Fir-Larch

#1
#2

Southern Pine***

#1
#2

1x4 Braces shall be SRB (Stress-Rated Board).

***For 1x4 So. Pine use only Industrial 55 or Industrial 45 Stress-Rated Boards. Group B values may be used with these grades.

Gable Truss Detail Notes:

Wind Load deflection criterion is L/240.

Provide uplift connections for 100 plf over continuous bearing (5 psf TC Dead Load).

Gable end supports load from 4' 0" outlookers with 2' 0" overhang, or 12" plywood overhang.

So. Pine lumber design values based on the AISC January, 2012 rulin

Attach "L" braces with 10d (0.128"x3.0" min) nails.

* For (1) "L" brace: space nails at 2" o.c. in 18" end zones and 4" o.c. between zones.

** For (2) "L" braces: space nails at 3" o.c. in 18" end zones and 6" o.c. between zones.

"L" bracing must be a minimum of 80% of web member length.

Gable Vertical Plate Sizes	
Vertical Length	No Splice
Less than 4' 0"	1.5X4
Greater than 4' 0", but less than 11' 6"	2.5X4
Greather than 11' 6"	3.5X4

+ Refer to common truss design for peak, splice, and heel plates.

Refer to the Building Designer for conditions not addressed by this detail.

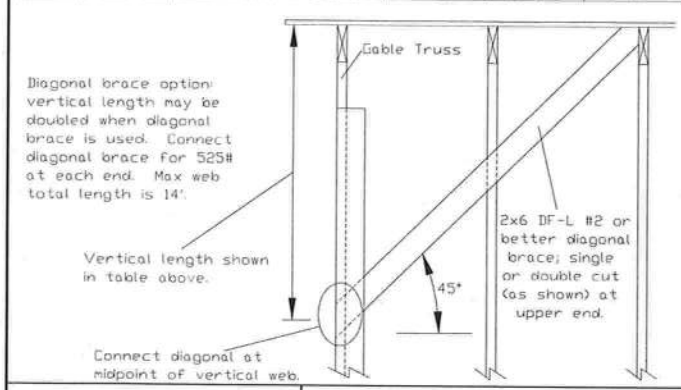

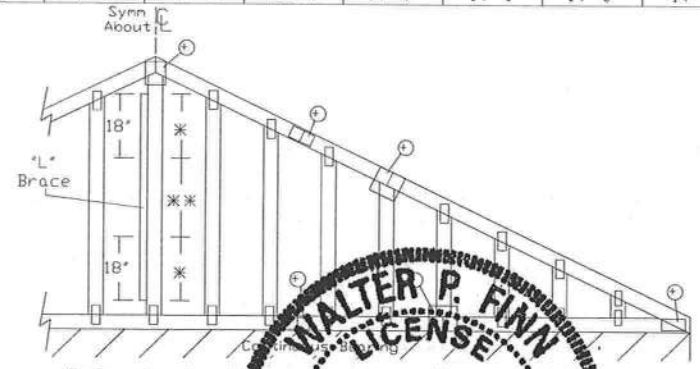

Refer to chart above for max gable vertical length.

ITW Building Components Group Inc.

Earth City, MO 63045

WARNING READ AND FOLLOW ALL NOTES ON THIS DRAWING!
IMPORTANT FURNISH THIS DRAWING TO ALL CONTRACTORS INCLUDING THE INSTALLERS.

Trusses require extreme care in fabricating, handling, shipping, installing and bracing. Refer to and follow the latest edition of BCSI (Building Component Safety Information, by TPI and WTCA) for safety practices prior to performing these functions. Installers shall provide temporary bracing per BCSI. Unless noted otherwise, top chord shall have properly attached structural sheathing and bottom chord shall have a properly attached rigid ceiling. Locations shown for permanent lateral restraint of webs shall have bracing installed per BCSI sections B3, B7 or B10, as applicable. Apply plates to each face of truss and position as shown above and on the Joint Details, unless noted otherwise. Refer to drawings 160A-Z for standard plate positions.

ITW Building Components Group Inc. shall not be responsible for any deviation from this drawing, failure to build the truss in conformance with ANSI/TPI 1, or for handling, shipping, installation & bracing of trusses. A seal on this drawing or cover page listing this drawing, indicates acceptance of professional engineering responsibility solely for the design shown. The suitability and use of this drawing for any structure is the responsibility of the Building Designer per ANSI/TPI 1 Sec.2. For more information see this job's general notes page and these web sites:
ITWBCG: www.itwbcg.com; TPI: www.tpinst.org; WTCA: www.sbcindustry.org; ICC: www.iccsafe.org

WALTER P. FINN
LICENSE
No. 22839
STATE OF FLORIDA
PROFESSIONAL ENGINEER

12
07/19/2012

MAX. TOT. LD. 60 PSF

MAX. SPACING 24.0"

REF	ASCE7-10-GAB14030
DATE	2/14/12
DRWG	A14030ENC100212

Gable Detail

For Let-in Verticals

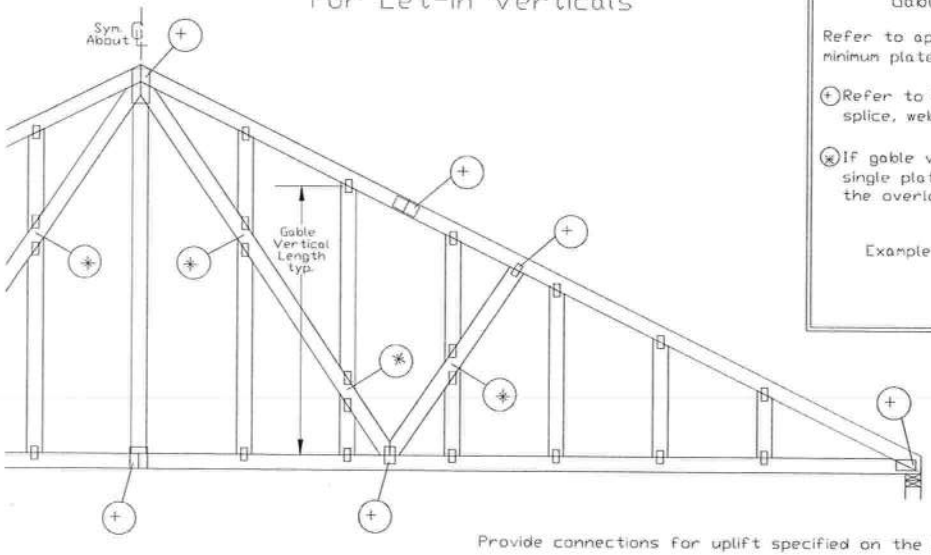

Gable Truss Plate Sizes

Refer to appropriate ITW gable detail for minimum plate sizes for vertical studs.

(+) Refer to Engineered truss design for peak, splice, web, and heel plates.

(*) If gable vertical plates overlap, use a single plate that covers the total area of the overlapped plates to span the web.

Example:

"T" Reinforcement Attachment Detail

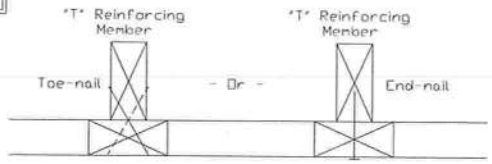

Provide connections for uplift specified on the engineered truss design.

Attach each "T" reinforcing member with

End Driven Nails:
10d Common (0.148"x 3.",min) Nails at 4" o.c. plus
(4) nails in the top and bottom chords.

Toenailed Nails:
10d Common (0.148"x3",min) Toenails at 4" o.c. plus
(4) toenails in the top and bottom chords.

This detail to be used with the appropriate ITW gable detail for ASCE wind load.

ASCE 7-98 Gable Detail Drawings
A13015980109, A12015980109, A11015980109, A10015980109,
A13030980109, A12030980109, A11030980109, A10030980109

ASCE 7-02 Gable Detail Drawings
A13015020109, A12015020109, A11015020109, A10015020109, A14015020109,
A13030020109, A12030020109, A11030020109, A10030020109, A14030020109

ASCE 7-05 Gable Detail Drawings
A13015050109, A12015050109, A11015050109, A10015050109, A14015050109,
A13030050109, A12030050109, A11030050109, A10030050109, A14030050109

ASCE 7-10 Gable Detail Drawings
A11515ENC100212, A12015ENC100212, A14015ENC100[illegible]
A18015ENC100212, A20015ENC100212, A20015EN[illegible]
A11530ENC100212, A12030ENC100212, A14030[illegible]
A18030ENC100212, A20030ENC100212, A200[illegible]

See appropriate ITW gable detail for maximum unreinforced gable vertical length.

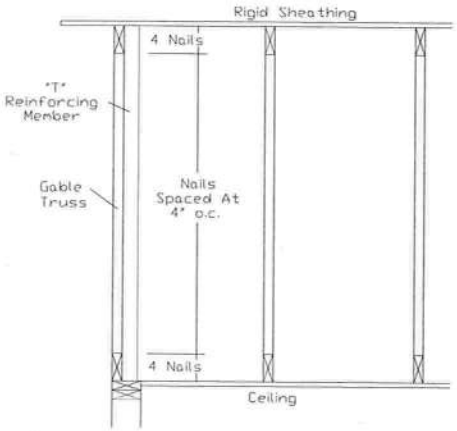

To convert from "L" to "T" reinforcing members, multiply "T" increase by length (based on appropriate ITW gable detail).

Maximum allowable "T" reinforced gable vertical length is 14' from top to bottom chord.

"T" reinforcing member material must match size, specie, and grade of the "L" reinforcing member.

Web Length Increase w/ "T" Brace

"T" Reinf. Mbr. Size	"T" Increase
2x4	30 %
2x6	20 %

Example:
ASCE 7-10 Wind Speed = 120 mph
Mean Roof Height = 30 ft, Kzt = 1.00
Gable Vertical = 24"o.c. SP #3
"T" Reinforcing Member Size = 2x4
"T" Brace Increase (From Above) = 30% = 1.30
(1) 2x4 "L" Brace Length = 8' 7"
Maximum "T" Reinforced Gable Vertical Length
1.30 x 8' 7" = 11' 2"

ITW Building Components Group Inc.

Earth City, MO 63045

WARNING READ AND FOLLOW ALL NOTES ON THIS DRAWING!
IMPORTANT FURNISH THIS DRAWING TO ALL CONTRACTORS INCLUDING THE INSTALLERS.

Trusses require extreme care in fabricating, handling, shipping, installing and bracing. Refer to and follow the latest edition of BCSI (Building Component Safety Information, by TPI and WTCA) for safety practices prior to performing these functions. Installers shall provide temporary bracing per BCSI. Unless noted otherwise, top chord shall have properly attached structural sheathing and bottom chord shall have a properly attached rigid ceiling. Locations shown for permanent lateral restraint of webs shall have bracing installed per BCSI sections B3, B7 or B10, as applicable. Apply plates to each face of truss and position as shown above and on the Joint Details, unless noted otherwise. Refer to drawings 160A-Z for standard plate positions.

ITW Building Components Group Inc. shall not be responsible for any deviation from this drawing, any failure to build the truss in conformance with ANSI/TPI 1, or for handling, shipping, installation & bracing of trusses. A seal on this drawing or cover page listing this drawing, indicates acceptance of professional engineering responsibility solely for the design shown. The suitability and use of this drawing for any structure is the responsibility of the Building Designer per ANSI/TPI 1 Sec.2. For more information see this job's general notes page and these web sites:
ITWBCG: www.itwbcg.com; TPI: www.tpinst.org; WTCA: www.sbcindustry.org; ICC: www.iccsafe.or

WALTER P. FINN
LICENSE
No. 22839
STATE OF FLORIDA
PROFESSIONAL ENGINEER

07/19/2012

MAX. TOT. LD. 60 PSF
DUR. FAC. ANY
MAX. SPACING 24.0"

REF	LET-IN VERT
DATE	2/16/12
DRWG	GBLLETIN0212

CLB WEB BRACE SUBSTITUTION

THIS DETAIL IS TO BE USED WHEN CONTINUOUS LATERAL BRACING (CLB) IS SPECIFIED ON A TRUSS DESIGN BUT AN ALTERNATIVE WEB BRACING METHOD IS DESIRED.

NOTES:

THIS DETAIL IS ONLY APPLICABLE FOR CHANGING THE SPECIFIED CLB SHOWN ON SINGLE PLY SEALED DESIGNS TO T-BRACING OR SCAB BRACING.

ALTERNATIVE BRACING SPECIFIED IN CHART BELOW MAY BE CONSERVATIVE. FOR MINIMUM ALTERNATIVE BRACING, RE-RUN DESIGN WITH APPROPRIATE BRACING.

WEB MEMBER SIZE	SPECIFIED CLB BRACING	ALTERNATIVE BRACING T OR L-BRACE	ALTERNATIVE BRACING SCAB BRACE
2X3 OR 2X4	1 ROW	2X4	1-2X4
2X3 OR 2X4	2 ROWS	2X6	2-2X4
2X6	1 ROW	2X4	1-2X6
2X6	2 ROWS	2X6	2-2X4(*)
2X8	1 ROW	2X6	1-2X8
2X8	2 ROWS	2X6	2-2X6(*)

T-BRACE, L-BRACE AND SCAB BRACE TO BE SAME SPECIES AND GRADE OR BETTER THAN WEB MEMBER UNLESS SPECIFIED OTHERWISE ON ENGINEER'S SEALED DESIGN.

(*) CENTER SCAB ON WIDE FACE OF WEB. APPLY (1) SCAB TO EACH FACE OF WEB.

T-BRACING OR L-BRACING:

APPLY TO EITHER SIDE OF WEB NARROW FACE.
ATTACH WITH 10d BOX OR GUN (0.128"x 3.",MIN) NAILS.
AT 6" O.C.
BRACE IS A MINIMUM 80% OF WEB MEMBER LENGTH

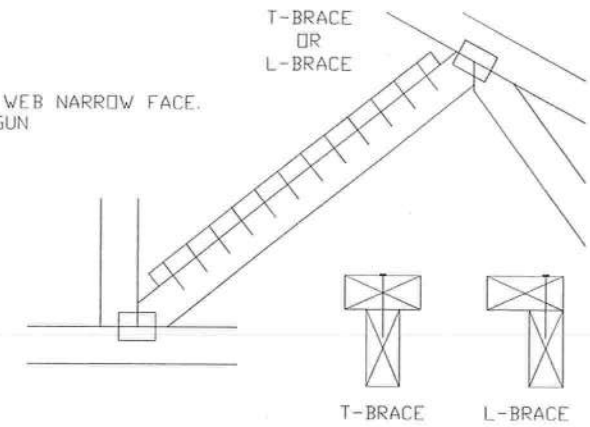

SCAB BRACING:

APPLY SCAB(S) TO WIDE FACE OF WEB.
NO MORE THAN (1) SCAB PER FACE.
ATTACH WITH 10d BOX OR GUN (0.128"x 3.",MIN) NAILS.
AT 6" O.C.
BRACE IS A MINIMUM 80% OF WEB MEMBER LENGTH

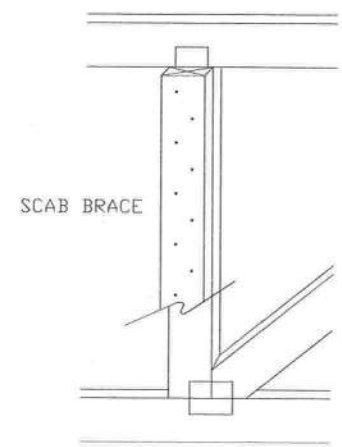

WALTER P. FINN
LICENSE
No. 22839
STATE OF FLORIDA
PROFESSIONAL ENGINEER
07/19/2012

TW
Building Components Group Inc.
Earth City, MO 63045

WARNING READ AND FOLLOW ALL NOTES ON THIS SHEET!
Trusses require extreme care in fabricating, handling, shipping, installing and bracing. Refer to and follow BCSI (Building Component Safety Information, by TPI and WTCA) for safety practices prior to performing these functions. Installers shall provide temporary bracing per BCSI. Unless noted otherwise, top chord shall have properly attached structural panels and bottom chord shall have a properly attached rigid ceiling. Locations shown for permanent lateral restraint of webs shall have bracing installed per BCSI sections B3 & B7. See this job's general notes page for more information.

IMPORTANT FURNISH COPY OF THIS DESIGN TO INSTALLATION CONTRACTOR.
ITW Building Components Group Inc. (ITWBCG) shall not be responsible for any deviation from this design, any failure to build the truss in conformance with TPI, or fabricating, handling, shipping, installing & bracing of trusses. ITWBCG connector plates are made of 20/18/16GA (W,H/S/K) ASTM grade 37/40/60 (K/W/H,S) galv. steel. Apply plates to each face of truss, positioned as shown above and on Joint Details.
A seal on this drawing or cover page indicates acceptance and professional engineering responsibility solely for the truss component design shown. The suitability and use of this component for any building is the responsibility of the Building Designer per ANST/TPI 1 Sec. 2.
ITW-BCG: www.itwbcg.com; TPI: www.tpinst.com; WTCA: www.sbcindustry.com; ICC: www.iccsafe.org

TC LL	PSF	REF	CLB SUBST.
TC DL	PSF	DATE	1/1/09
BC DL	PSF	DRWG	BRCLBSUB0109
BC LL	PSF		
TOT. LD.	PSF		
DUR. FAC.			
SPACING			

NAIL SPACING DETAIL

MINIMUM SPACING FOR SINGLE BLOCK IS SHOWN. DOUBLE NAIL SPACINGS AND STAGGER NAILING FOR TWO BLOCKS. GREATER SPACING MAY BE REQUIRED TO AVOID SPLITTING.

BLOCK LOCATION, SIZE, LENGTH,GRADE AND TOTAL NUMBER AND TYPE OF NAILS ARE TO BE SPECIFIED ON SEALED DESIGN REFERENCING THIS DETAIL.

LOAD PERPENDICULAR TO GRAIN
A - EDGE DISTANCE AND SPACING BETWEEN STAGGERED ROWS OF NAILS (6 NAIL DIAMETERS)
B - SPACING OF NAILS IN A ROW (12 NAIL DIAMETERS)
C - END DISTANCE (15 NAIL DIAMETERS)

LOAD PARALLEL TO GRAIN
A - EDGE DISTANCE (6 NAIL DIAMETERS)
C - SPACING OF NAILS IN A ROW AND END DISTANCE (15 NAIL DIAMETERS)
D - SPACING BETWEEN STAGGERED ROWS OF NAILS (7 1/2 NAIL DIAMETERS)

IF NAIL HOLES ARE PREBORED, SOME SPACING MAY BE REDUCED BY THE AMOUNTS GIVEN BELOW:
* SPACING MAY BE REDUCED BY 50%
** SPACING MAY BE REDUCED BY 33%

MINIMUM NAIL SPACING DISTANCES

NAIL TYPE	DISTANCES A	B*	C**	D
8d BOX (0.113"X 2.5",MIN)	3/4"	1 3/8"	1 3/4"	7/8"
10d BOX (0.128"X 3.",MIN)	7/8"	1 5/8"	2"	1"
12d BOX (0.128"X 3.25",MIN)	7/8"	1 5/8"	2"	1"
16d BOX (0.135"X 3.5",MIN)	7/8"	1 5/8"	2 1/8"	1 1/8"
20d BOX (0.148"X 4.",MIN)	1"	1 7/8"	2 1/4"	1 1/8"
8d COMMON (0.131"X 2.5",MIN)	7/8"	1 5/8"	2"	1"
10d COMMON (0.148"X 3.",MIN)	1"	1 7/8"	2 1/4"	1 1/8"
12d COMMON (0.148"X 3.25",MIN)	1"	1 7/8"	2 1/4"	1 1/8"
16d COMMON (0.162"X 3.5",MIN)	1'	2"	2 1/2"	1 1/4"
GUN (0.120"X 2.5",MIN)	3/4"	1 1/2"	1 7/8"	1"
GUN (0.131"X 2.5",MIN)	7/8"	1 5/8"	2"	1"
GUN (0.120"X 3.",MIN)	3/4"	1 1/2"	1 7/8"	1"
GUN (0.131"X 3.",MIN)	7/8"	1 5/8"	2"	1"

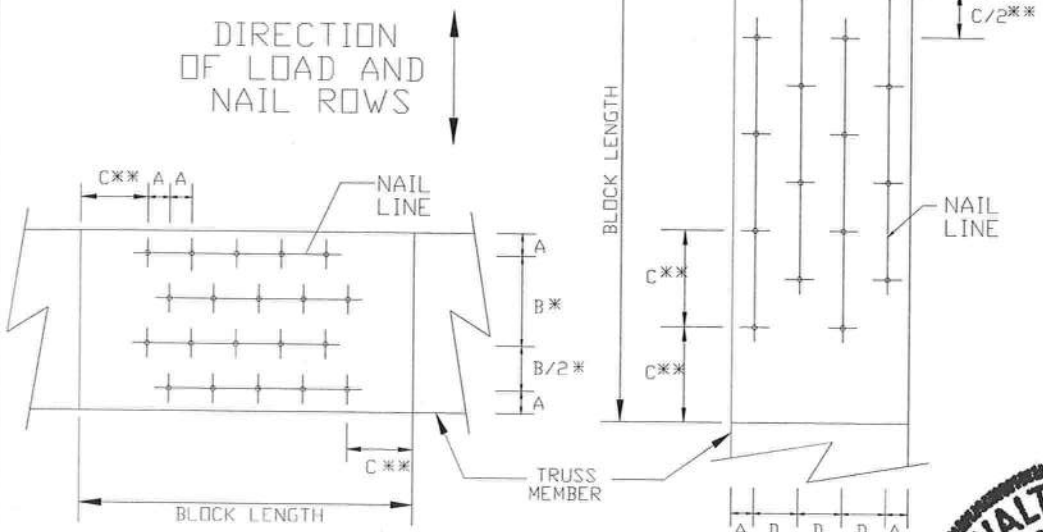

LOAD APPLIED PERPENDICULAR TO GRAIN LOAD APPLIED PARALLEL TO GRAIN

WALTER P. FINN LICENSE No. 22839 STATE OF FLORIDA PROFESSIONAL ENGINEER
07/19/2012

TW Building Components Group Inc.
Earth City, MO 63045

WARNING READ AND FOLLOW ALL NOTES ON THIS SHEET!
Trusses require extreme care in fabricating, handling, shipping, installing and bracing. Refer to and follow BCSI (Building Component Safety Information, by TPI and WTCA) for safety practices prior to performing these functions. Installers shall provide temporary bracing per BCSI. Unless stated otherwise, top chord shall have properly attached structural panels and bottom chord shall have properly attached rigid ceiling. Locations shown for permanent lateral restraint of webs shall have bracing installed per BCSI sections B3 & B7. See this job's general notes page for more information.

IMPORTANT FURNISH COPY OF THIS DESIGN TO INSTALLATION CONTRACTOR.
ITW Building Components Group Inc. (ITWBCG) shall not be responsible for any deviation from this design, any failure to build the truss in conformance with TPI, or fabricating, handling, shipping, installing & bracing of trusses. ITWBCG connector plates are made of 20/18/16GA (W,H/S/K) A653 grade 37/40/60 (K/W/H,S) galv. steel. Apply plates to each face of truss, positioned as shown on this and on Joint Details.
A seal on this drawing or cover page indicates acceptance and professional engineering responsibility solely for the truss component design shown. The suitability and use of this component for any building is the responsibility of the Building Designer per ANSI/TPI 1 Sec. 2.
ITW-BCG: www.itwbcg.com; TPI: www.tpinst.com; WTCA: www.sbcindustry.com; ICC: www.iccsafe.org

REF	NAIL SPACE
DATE	1/1/09
DRWG	CNNAILSP0109