PRECAST LINTEL SCHEDULE

QUALITY PRECAST COMPANY
"STRONG" ON SERVICE
P.O. Box 11 – Brandon, Forida 33509-0011
(813) 685-5615
Fax: (813) 653-3240
Pinellas (727) 821-6227

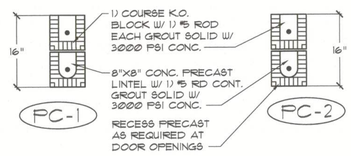

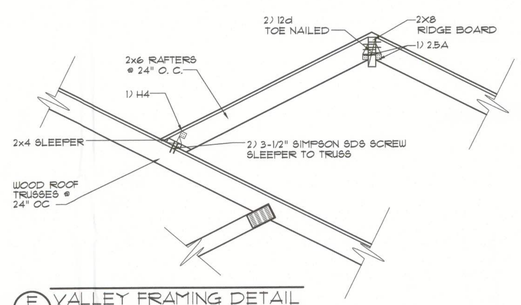

E/6 VALLEY FRAMING DETAIL
SCALE-3/4"=1'-0"

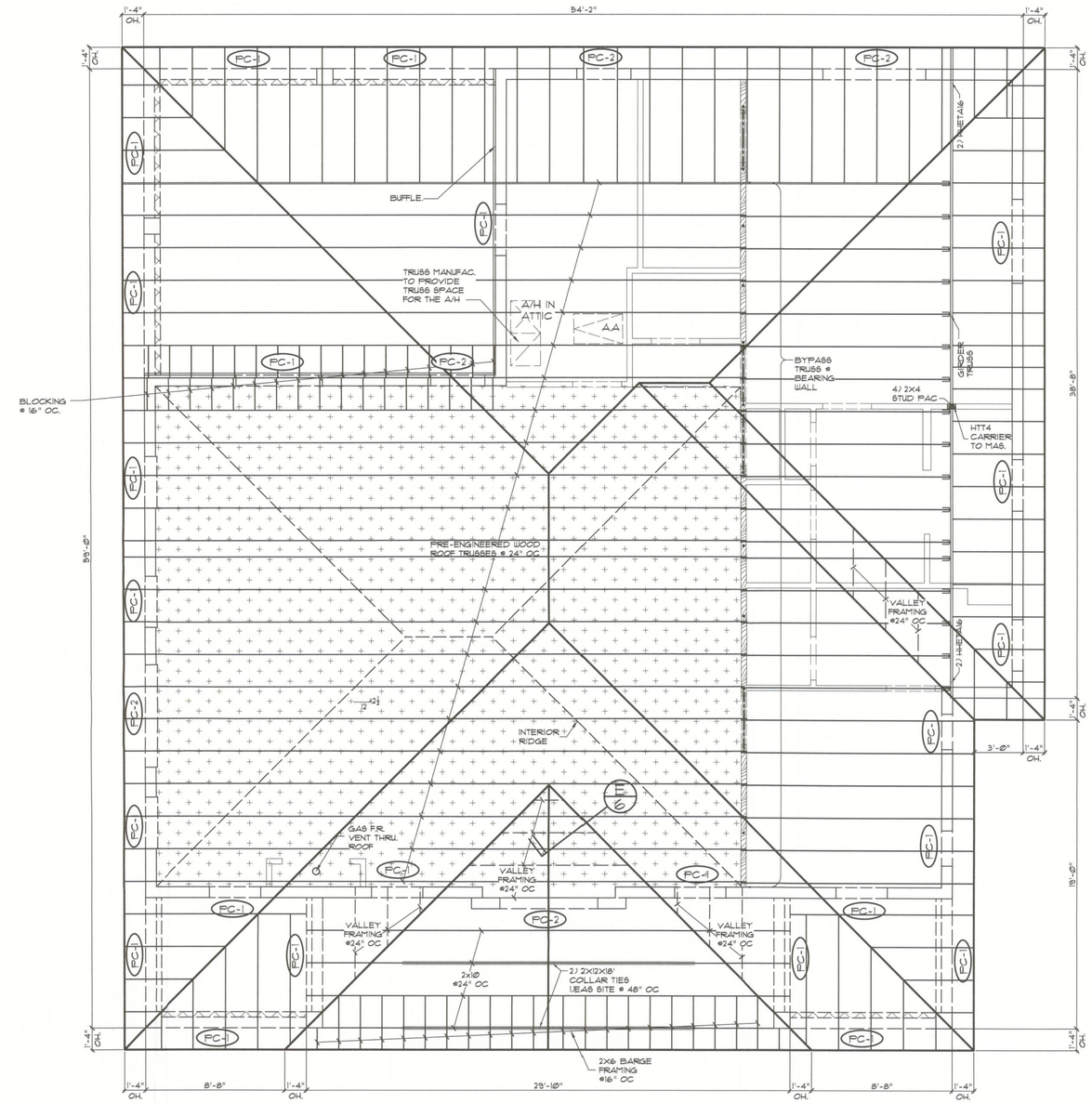

ROOF FRAMING PLAN

SCALE-1/4"=1'-0"

BUILDING DATA

NOTE: ALL LIVING ROOF AREAS TO BE INSULATED USING 5.5" R-38 PERFORMING ICYNENE INSULATION. REQUIRING SEALED ATTIC SPACE. THIS SPACE TO BE SEALED PER ICYNENE SPECS.

NOTE: NON LIVING ATTIC SPACES TO BE VENTED BY VENTED SOFFIT, RIDGE & OFF-RIDGE VENTING OR EQUAL. VENTING SOLUTIONS PER F.B.C. 806.2

VENTING NOTE

ALL PLUMBING & A/C THRU ROOF VENTING TO BE INSTALLED ON REAR & SIDE ELEVATIONS ONLY. (REAR ROOF PREFERRED WHERE POSSIBLE)

BEAM LEGEND

Ⓐ 2) 2X12
FASTEN W/ 2) ROWS OF 16d @ 6" OC

SYMBOL LEGEND

- INDICATES UPSET BEAM
- INDICATES DOWNSET BEAM
- INDICATES BOXED BEAM/LINTEL.
- INDICATES VOLUME CEILINGS W/ PITCHED B.C.
- INDICATES 2X INTERIOR BEARING WALLS
- INDICATES 2x EXTERIOR SHEAR WALLS W/ ½" A.T.R. HOLD DOWN SYSTEM @ 60" OC MAX SPACING & 1) WITHIN 12" OF EACH KING STUD & CORNER

FRAMING PLAN NOTES

NOTE: MINIMUM WOOD TO WOOD CONNECTION U.N.O. TO BE 3) 10d

NOTE: CONTRACTOR TO PROVIDE BUILDING DESIGNER WITH TRUSS ENGINEERING, FOR VERIFICATION & OR ADJUSTMENT TO PLANS FOR FINAL HOLD DOWN CONNECTOR UPLIFTS.

NOTE: 1) HHETA16 TYP. TRUSS TO MASONRY. ALT. FOR MISSED STRAP 1) HTSM16

NOTE: ALL BEARING HTS TYP. (UNO) THIS PAGE BASED ON 0'-0" ASSUMED LIVING FIN. FL. HT. (10'-0" TYPICAL TOP OF MASONRY)

NOTE: ALL ROOFS TO BE SEALED ROOF W/ ICYNENE INSULATION. INSTALLED PER MANU. SPECIFICATIONS. A/C EQUIPMENT TO BE PROPERLY SIZED TO MINIMIZE MOISTURE. DE-HUMIDIFIER TO BE INSTALL PER ICYNENE SPECIFICATIONS.

NOTE: CONTRACTOR TO INSTALL 1"X1" MIN. LINEAR VENTED SOFFIT AT DECK & ROOF LOCATIONS FOR MOISTURE RELEASE IN SEALED DECK/ROOF PORTIONS NOT RECEIVING ICYNENE PER ICYNENE SPECS.

REVISIONS	BY

sdg ARCHITECTURE
AA26003539 727-736-5463
793 San Christopher Drive - Suite A - Dunedin, Fl 34698
RODNEY L. COLLMAN AIA
AR 0006572

CUSTOM HOME FOR:
ROBERT L & KATHRYN L MCDOW
1630 SW SALEM RD, LAKE CITY

DRAWN BY- XM
CHECK BY- TJG
JOB# 20-058
DATE 03/27/23
■ PROGRESS SET
□ PERMITTING SET
PAGE 6 OF 8