DATE 10/20/2005

Columbia County Building Permit

This Permit Expires One Year From the Date of Issue

PERMIT
000023743

APPLICANT PAUL ANTHONY BROWN PHONE 386.235.5021

ADDRESS 177 SW PETER COYLE CT LAKE CITY FL 32024

OWNER PAUL ANTHONY BROWN PHONE 386.235.5021

ADDRESS 177 SW PETER COYLE CT LAKE CITY FL 32024

CONTRACTOR PAUL ANTHONY BROWN PHONE 386.235.5021

LOCATION OF PROPERTY C-341-S UNDER OVERPASS TO CREEKSIDE S/D,TR INTO ENTRANCE TO PETER COYLE CT,TR GO TO END ON R, LOT 24

TYPE DEVELOPMENT SFD/UTILITY ESTIMATED COST OF CONSTRUCTION 177000.00

HEATED FLOOR AREA 3540.00 TOTAL AREA 4050.00 HEIGHT 29.00 STORIES 1

FOUNDATION CONC WALLS FRAMED ROOF PITCH 10'12 FLOOR CONC

LAND USE & ZONING RSF-2 MAX. HEIGHT 35

Minimum Set Back Requirments: STREET-FRONT 25.00 REAR 15.00 SIDE 10.00

NO. EX.D.U. 0 FLOOD ZONE XPP DEVELOPMENT PERMIT NO.

PARCEL ID 12-4S-16-02939-124 SUBDIVISION CREEKSIDE

LOT 24 BLOCK PHASE UNIT TOTAL ACRES .51

Culvert Permit No.	Culvert Waiver	Contractor's License Number	Applicant/Owner/Contractor	
000000854				
WAIVER	05-0857-N	BLK	JTH	N
Driveway Connection	Septic Tank Number	LU & Zoning checked by	Approved for Issuance	New Resident

COMMENTS: 1 FOOT ABOVE ROAD.

Check # or Cash CASH REC'D.

FOR BUILDING & ZONING DEPARTMENT ONLY

(footer/Slab)

Temporary Power _____ date/app. by Foundation _____ date/app. by Monolithic _____ date/app. by

Under slab rough-in plumbing _____ date/app. by Slab _____ date/app. by Sheathing/Nailing _____ date/app. by

Framing _____ date/app. by Rough-in plumbing above slab and below wood floor _____ date/app. by

Electrical rough-in _____ date/app. by Heat & Air Duct _____ date/app. by Peri. beam (Lintel) _____ date/app. by

Permanent power _____ date/app. by C.O. Final _____ date/app. by Culvert _____ date/app. by

M/H tie downs, blocking, electricity and plumbing _____ date/app. by Pool _____ date/app. by

Reconnection _____ date/app. by Pump pole _____ date/app. by Utility Pole _____ date/app. by

M/H Pole _____ date/app. by Travel Trailer _____ date/app. by Re-roof _____ date/app. by

BUILDING PERMIT FEE $ 885.00 CERTIFICATION FEE $ 20.25 SURCHARGE FEE $ 20.25

MISC. FEES $ .00 ZONING CERT. FEE $ 50.00 FIRE FEE $ .00 WASTE FEE $

FLOOD DEVELOPMENT FEE $ FLOOD ZONE FEE $ CULVERT FEE $ **TOTAL FEE** 975.50

INSPECTORS OFFICE CLERKS OFFICE CH

NOTICE: IN ADDITION TO THE REQUIREMENTS OF THIS PERMIT, THERE MAY BE ADDITIONAL RESTRICTIONS APPLICABLE TO THIS PROPERTY THAT MAY BE FOUND IN THE PUBLIC RECORDS OF THIS COUNTY. AND THERE MAY BE ADDITIONAL PERMITS REQUIRED FROM OTHER GOVERNMENTAL ENTITIES SUCH AS WATER MANAGEMENT DISTRICTS, STATE AGENCIES, OR FEDERAL AGENCIES.

"WARNING TO OWNER: YOUR FAILURE TO RECORD A NOTICE OF COMMENCEMENT MAY RESULT IN YOUR PAYING TWICE FOR IMPROVEMENTS TO YOUR PROPERTY. IF YOU INTEND TO OBTAIN FINANCING, CONSULT WITH YOUR LENDER OR AN ATTORNEY BEFORE RECORDING YOUR NOTICE OF COMMENCEMENT."

This Permit Must Be Prominently Posted on Premises During Construction

PLEASE NOTIFY THE COLUMBIA COUNTY BUILDING DEPARTMENT AT LEAST 24 HOURS IN ADVANCE OF EACH INSPECTION, IN ORDER THAT IT MAY BE MADE WITHOUT DELAY OR INCONVIENCE, PHONE 758-1008. THIS PERMIT IS NOT VALID UNLESS THE WORK AUTHORIZED BY IT IS COMMENCED WITHIN 6 MONTHS AFTER ISSUANCE.

The Issuance of this Permit Does Not Waive Compliance by Permittee with Deed Restrictions.

PAUL BROWN #23743

2343 Sabastian St.

Mount Dora, FL 23757

Dear all,

Please could you extend my building permit #23743, lot 24 CREEKSIDE.

Thank you.

My address in Mount Dora is above and my telephone # is 352-735-1497.

If you need to contact me.

Thanks again.

Paul Brown

PAUL BROWN #23743

2343 Sabastian St.

Mount Dora, FL 23757

Dear all,

Please could you extend my building permit #23743, lot 24 CREEKSIDE.

Thank you.

My address in Mount Dora is above and my telephone # is 352-735-1497.

If you need to contact me.

Thanks again.

Paul Brown

FROM PAUL A. BROWN
177 S.W PETER COYLE CT
LAKE CITY FL
32025.

6/27/07

DEAR BUILDING DEP

PLEASE EXTEND MY BUILDING PERMIT, PERMIT #23743. I AM BUILDING MY HOUSE ON MY OWN AND ITS TAKING LONGER THAN I EXPECTED.

Thankyou

Paul Brown.

Columbia County Building Permit Application

left mess age Revised 9-23-04

For Office Use Only Application # 0805-86 Date Received 8/23/05 By JW Permit # 85 9/1/05 23743

Application Approved by - Zoning Official BLK Date 13.09.05 Plans Examiner OK JTH Date 9-6-05

Flood Zone X pot Development Permit N/A Zoning RSF-2 Land Use Plan Map Category Res. Low Den.

Comments

Need NOC

ANY CONCERNS CELL #

Applicants Name PAUL ANTHONY BROWN. Phone 386 235 5021

Address 177 S.W PETER COYLE CT LAKE CITY F.L. 32024

Owners Name PAUL ANTHONY BROWN Phone

911 Address 177 S.W PETER COYLE CT LAKE CITY F.L. 32024.

Contractors Name OWNER BUILER ABOVE Phone

Address

Fee Simple Owner Name & Address

Bonding Co. Name & Address NONE. 758-4290

Architect/Engineer Name & Address WILLIAM FREEMAN 161 NW MADISON ST SUITE 102 LCITY

Mortgage Lenders Name & Address NONE

Circle the correct power company - FL Power & Light - Clay Elec. - Suwannee Valley Elec. - Progressive Energy

Property ID Number 12-4S-16-02939-124 Estimated Cost of Construction $ 120,000

Subdivision Name "CREEKSIDE" Lot 24 Block / Unit / Phase /

Driving Directions TOWARDS I75S BRIDGE ON SISTER WELCOME FROM LAKE CITY, TURN RIGHT ONTO CREEKSIDE, SECOND RIGHT ONTO PETER COYLE, AT THE END OF THE RD ON RIGHT LOT 24.

Type of Construction BLOCK. S.F.D. Number of Existing Dwellings on Property NIL

Total Acreage .51 Lot Size Do you need a - Culvert Permit or Culvert Waiver or Have an Existing Drive

Actual Distance of Structure from Property Lines - Front 20.1 Side 34.67 Side 54.75 Rear 22.5

Total Building Height 29:10 5/32 Number of Stories 2 Heated Floor Area 3540. Roof Pitch 10-12

PORCH 36 GARAGE 474 TOTAL 4050

Application is hereby made to obtain a permit to do work and installations as indicated. I certify that no work or installation has commenced prior to the issuance of a permit and that all work be performed to meet the standards of all laws regulating construction in this jurisdiction.

OWNERS AFFIDAVIT: I hereby certify that all the foregoing information is accurate and all work will be done in compliance with all applicable laws and regulating construction and zoning.

WARNING TO OWNER: YOUR FAILURE TO RECORD A NOTICE OF COMMENCMENT MAY RESULT IN YOU PAYING TWICE FOR IMPROVEMENTS TO YOUR PROPERTY. IF YOU INTEND TO OBTAIN FINANCING, CONSULT WITH YOUR LENDER OR ATTORNEY BEFORE RECORDING YOUR NOTICE OF COMMENCEMENT.

Owner Builder or Agent (Including Contractor)

Contractor Signature

Contractors License Number

Competency Card Number

NOTARY STAMP/SEAL

GALE TEDDER MY COMMISSION # DD 326588 EXPIRES: June 28, 2008 Bonded Thru Notary Public Underwriters

STATE OF FLORIDA
COUNTY OF COLUMBIA

Sworn to (or affirmed) and subscribed before me this 23rd day of August 20 05.

Personally known ____ or Produced Identification DL

Notary Signature

DISCLOSURE STATEMENT

FOR OWNER/BUILDER WHEN ACTING AS THER OWN CONTRACTOR AND CLAIMING EXEMPTION OF CONTRACTOR LICENSING REQUIREMENTS IN ACCORDANCE WITH FLORIDA STATUTES, ss. 489.103(7).

State law requires construction to be done by licensed contractors. You have applied for a permit under an exemption to that law. The exemption allows you, as the owner of your property, to act as your own contractor with certain restrictions even though you do not have a license. You must provide direct, onsite supervision of the construction yourself. You may build or improve a one-family or two-family residence or a farm outbuilding. You may also build or improve a commercial building, provided your costs do not exceed $25,000. The building or residence must be for your own use or occupancy. It may not be built or substantially improved for sale or lease. If you sell or lease a building you have built or substantially improved yourself within 1 year after the construction is complete, the law will presume that you built or substantially improved it for sale or lease, which is a violation of this exemption. You may not hire an unlicensed person to act as your contractor or to supervise people working on your building. It is your responsibility to make sure that people employed by you have licenses required by state law and by county or municipal licensing ordinances. You may not delegate the responsibility for supervising work to a licensed contractor who is not licensed to perform the work being done. Any person working on your building who is not licensed must work under your direct supervision and must be employed by you, which means that you must deduct F .I.C.A. and withholding tax and provide workers' compensation for that employee, all as prescribed by law. Your construction must comply with all applicable laws, ordinances, building codes, and zoning regulations.

TYPE OF CONSTRUCTION

(X) Single Family Dwelling
( ) Farm Outbuilding
( ) New Construction
( ) Two-Family Residence
( ) Other_____
( ) Addition, Alteration, Modification or other Improvement

NEW CONSTRUCTION OR IMPROVEMENT

I PAUL BROWN. **, have been advised of the above disclosure statement for exemption from contractor licensing as an owner/builder. I agree to comply with all requirements provided for in Florida Statutes ss.489.103(7) allowing this exception for the construction permitted by Columbia County Building Permit Number_____**

Signature _____ 8/23/05. **Date**

FOR BUILDING USE ONLY

I hereby certify that the above listed owner/builder has been notified of the disclosure statement in Florida Statutes ss 489.103(7).

Date 8-23-05 **Building Official/Representative** _____

NOTICE OF COMMENCEMENT FORM
COLUMBIA COUNTY, FLORIDA

THE UNDERSIGNED hereby gives notice that improvement will be made to certain real property, and in accordance with Chapter 713, Florida Statutes, the following information is provided in this Notice of Commencement.

Tax Parcel ID Number 12-4S-16-02939-124

1. **Description of property: (legal description of the property and street address or 911 address)**
   LOT 24 "CREEKSIDE" S/D.
   177 S.W PETER COYLE CT
   LAKE CITY.
   FL 32024.
2. **General description of improvement:**
3. **Owner Name & Address** PAUL BROWN. 177. S.W PETER COYLE CT LAKE CITY FL 32025. **Interest in Property** 100%
4. **Name & Address of Fee Simple Owner (if other than owner):**
5. **Contractor Name** PAUL BROWN. **Phone Number** MOBILE ONLY 386 235 5021
   Address
6. **Surety Holders Name**
   Address
   Amount of Bond N/A
7. **Lender Name**
   Address

Inst:2006001427 Date:01/19/2006 Time:16:03
DC,P.DeWitt Cason,Columbia County B:1071 P:1679

8. **Persons within the State of Florida designated by the Owner upon whom notices or other documents may be served as provided by section 718:13 (1)(a) 7; Florida Statutes:**
   Name N/A. **Phone Number**
   Address
9. **In addition to himself/herself the owner designates** N/A. **of**
   to receive a copy of the Lienor's Notice as provided in Section 713.13 (1) – (a) 7. Phone Number of the designee
10. **Expiration date of the Notice of Commencement (the expiration date is 1 (one) year from the date of recording, (Unless a different date is specified)**

NOTICE AS PER CHAPTER 713, Florida Statutes:
The owner must sign the notice of commencement and no one else may be permitted to sign in his/her stead.

Signature of Owner

Sworn to (or affirmed) and subscribed before 23rd **day of** August, 20 05

NOTARY STAMP/SEAL
GALE TEDDER
MY COMMISSION # DD 333586
EXPIRES: June 26, 2008
Bonded Thru Notary Public Underwriters

Signature of Notary

23743

This instrument prepared by:

Pete Giebeig
P.O. Box 1384
Lake City, FL 32056

AGREEMENT FOR DEED

THIS AGREEMENT, made this 25th day of February, 20005, between Peter W. Giebeig, whose mailing address is P.O. Box 1384 Lake City, Fl. 32056 (hereinafter called "Seller"), and Paul Anthony Brown, whose mailing address is 1648 Taylor Road #148 Port Orange, Fl. 32128-6753, 386-235-5021 (hereinafter called "Buyer"):

W I T N E S S E T H:

That if Buyer shall make the payments and perform the covenants herein contained, Seller covenants and agrees to convey and assure to Buyer, his heirs, successors and assigns, in fee simple, by a good and sufficient warranty deed, free and clear of all encumbrances, except as herein provided, the parcel or tract of land situated in Columbia County, Florida, and described as follows:

Lot #24 Creekside
177 SW Peter Coyle Court

TOGETHER WITH all improvements, if any, located thereon and which are hereafter called "the premises".

And Buyer hereby covenants and agrees to pay to Seller the sum of Twenty Four Thousand Nine Hundred Dollars and no/00 ($24,900.00) DOLLARS in the manner following: Five Thousand Dollars and no/100 ($5,000.00) DOLLARS upon the execution of this agreement, the receipt of which is acknowledged, and the balance of Nineteen Thousand Nine Hundred Dollars and no/100 ($19,900.00)

DOLLARS, which shall bear interest at the rate of Seven (7 %) percent per annum and shall be payable in Thirty Six equal consecutive monthly installments of ~~Three Hundred Ninety Four Dollars and 04/100~~ ($394.04) DOLLARS each, the first installment to become due on the 25th day of March, 2005, and a like sum to be due and payable on the same day of each and every month thereafter for 36 months. At the end of 36 months the entire amount of principle and interest becomes due and payable.

Installment payments shall be applied first to the payment of accrued interest and then to principal. All payments shall be made to Seller at Seller's address hereinabove stated, or such other place as Seller shall designate in writing.

AND it is further agreed between the parties as follows:

1. Buyer shall pay all taxes, assessments and impositions that may be legally levied or imposed upon the premises during the term of this agreement, commencing with the year in which this agreement is executed and delivered.

2. In the event of failure of Buyer to make any of the payments or any part thereof, or to perform any of the covenants contained herein, this contract and agreement shall, at the option of the Seller, be forfeited and terminated and Buyer shall forfeit all payments made on this contract and such payments shall be retained by Seller in full satisfaction and liquidation of all damages sustained by Seller; or at the option of Seller, the entire unpaid amount of principal and interest shall be due and payable and Seller shall be entitled to any and all legal remedy for the collection thereof as may be permitted under the laws of the State of Florida.

3. In the event Buyer shall fail to make the payments provided for herein or shall breach any other covenants hereof, Seller shall have the right to immediate possession of the premises and shall have the right to enter the same and remove all persons therefrom, forceably or otherwise; and Buyer hereby waives any and all notices required by law to terminate any tenancy and also waives all legal procedures to recover possession of said premises and agrees to surrender the same immediately upon demand to Seller.

4. Buyer agrees to maintain the premises in the same condition and repair as they are at the date hereof, excepting only reasonable wear, tear and depreciation and damages by fire, acts of God, the elements or other casualty, and to make good to Seller immediately upon demand any damage to the premises caused by any acts or negligence of Buyer, or any persons in the employ of or under the control of Buyer.

5. If at any time it becomes necessary for one of the parties hereto to serve any notice or demand upon the other, such notice shall be in writing, deposited in the United States mail by certified or registered mail, postage prepaid, addressed to the address of the other party as set forth hereinabove, or by personal delivery to and receipt by the other party. Any notice so mailed shall be deemed to have been given as of the time the same is deposited in the United States mail.

6. Buyer shall not place any improvements upon the premises so as to create any lien thereon in favor of any third party, and in default of this provision Seller shall have the right to re-enter and take possession of and title to the premises.

7. Buyer shall keep the improvements, if any, located on the premises insured against loss by fire or other casualty in a sum of not less than the full insurable value of such improvements with loss payable clause in favor of Seller.

8. Buyer shall have the privilege of paying all or any portion of the purchase price at any time and from time to time prior to maturity, without penalty.

9. If one party defaults in the performance of any of the covenants of this agreement, and by reason thereof the other party employs an attorney at law to enforce performance of the covenants hereof by the defaulting party, the defaulting party agrees to pay a reasonable attorney's fee and court costs incurred by the other party in the enforcement of any remedy available to such nondefaulting party.

10. Buyer shall have the right to enter into possession of the premises from the date hereof and shall have the exclusive right to the use of the premises so long as Buyer is not in default under the terms hereof; provided, however, that Seller shall have the right to inspect the premises at reasonable times to determine if Buyer is complying with the terms of this agreement.

11. Upon compliance by Buyer with all the terms and conditions hereof, including the payment of all principal and accrued interest, Seller shall deliver to Buyer a good and sufficient warranty deed conveying the entire fee simple title to the premises to Buyer, free and clear of all liens and encumbrances, except as otherwise described herein and except such liens and encumbrances as may arise through the action or inaction of Buyer, his successors, heirs and assigns, or persons claiming by, through, under or against Buyer subsequent to the date hereof. Seller shall not be obligated to furnish to Buyer any evidence of title at any time subsequent to the date of the execution and delivery of this agreement in the form of either abstracts of title, title insurance or otherwise.

12. Expenses of recordation, documentary stamps and intangible tax on agreement for deed shall be paid by buyer. Seller shall pay all cost connected with the warranty deed, such as, cost of preparation, documentary stamps, intangible tax and recording fees.

13. The terms "Buyer" and "Seller", as used herein, shall be considered singular or plural as the case may be and the context so require, and in the event Buyer named herein is more than one person, this agreement shall be jointly and severally binding upon each and every individual named as Buyer.

14. This agreement shall be binding upon and inure to the benefit of the respective heirs, successors and assigns of the parties; provided, however, that no assignment of any rights hereunder by Buyer shall be binding upon Seller without the prior written consent of Seller.

15. The premises and the title thereto are subject to the following restrictions, limitations and/or exceptions which shall be included in the deed of conveyance to Buyer when executed and delivered:

(a) Restrictions recorded in Official Record Book 989, Pages 823-826, public records of Columbia County, Florida.

(b) Easements of record for utility lines.

Buyer agrees to abide by and comply with all restrictions, copy of which has been furnished to Buyer.

16. The premises herein described are presently encumbered by a mortgage held by N?A, recorded in Official Record Book N/A, Pages N/A ("N/A Mortgage"). Seller represents and warrants that he will make all payments due and to become due on the N/A Mortgage when such payments are due and payable and he will not permit a default in any of the payments or the other terms and conditions of said mortgage. Seller further represents and warrants to Buyer that, upon the total purchase price provided for in this agreement being paid in full, Seller, at no cost to Buyer, shall obtain proper release from the holder of the N/A Mortgage, which will release the premises from the lien of said mortgage, and shall deliver said release to Buyer.

17. At the time Seller delivers Buyer the Warranty Deed provided for herein, and upon its recordation, Seller shall deliver to Buyer, at Seller's expense, a title insurance policy, which shall insure Buyer's title as good and marketable, subject to no exceptions, except those contained in the Warranty Deed, liens which may arise through the action or inaction of Buyer, those permitted under the terms of this agreement, and the standard exceptions provided for in the title insurance policies.

IN WITNESS WHEREOF, the parties have executed this agreement the day and year first above written.

Signed, sealed and delivered in the presence of:

Elaine K. Tolar

Elaine K. Tolar

Sheryl Litteral

Witnesses as to Seller

Sheryl Litteral

Peter W. Giebeig

"SELLER"

Signed, sealed and delivered in the presence of:

Elaine K. Tolar

Elaine K. Tolar

Sheryl Litteral

Witnesses to Buyer

Sheryl Litteral

PAUL Anthony Brown

"BUYER"

****

STATE OF FLORIDA

SS:

COUNTY OF Columbia

Before me, a Notary Public in and for the jurisdiction aforesaid, this day personally appeared Peter W. Giebeig and _____, personally known to me, to be the person(s) who acknowledged execution of the foregoing instrument.

PERSONALLY KNOWN BY THE NOTARY PUBLIC X
OR PRODUCED IDENTIFICATION ___

_____
Type of Identification Produced

Elaine K. Tolar
Notary Public

Elaine K. Tolar

My commission expires:

ELAINE K. TOLAR
MY COMMISSION # DD 031554
EXPIRES: October 2, 2005
Bonded Thru Notary Public Underwriters

****

STATE OF FLORIDA

SS:

COUNTY OF Columbia

Before me, a Notary Public in and for the jurisdiction aforesaid, this day personally appeared Paul Anthony Brown and _____, personally known to me, to be the person(s) who acknowledged execution of the foregoing instrument.

PERSONALLY KNOWN BY THE NOTARY PUBLIC ___
OR PRODUCED IDENTIFICATION X

Driver's license
Type of Identification Produced

Elaine K. Tolar
Notary Public

Elaine K. tolar

My commission expires:

ELAINE K. TOLAR
MY COMMISSION # DD 031554
EXPIRES: October 2, 2005
Bonded Thru Notary Public Underwriters

****

M HAS BEEN APPROVED BY THE FLORIDA ASSOCIATION OF REALTORS® AND THE FLORIDA BAR

act For Sale And Purchase

ASSOCIATION OF REALTORS AND THE FLORIDA BAR

PARTIES: Peter W. Gieberg and Paul Brown ("Seller"), ("Buyer"), hereby agree that Seller shall sell and Buyer shall buy the following described Real Property and Personal Property (collectively "Property") pursuant to the terms and conditions of this Contract for Sale and Purchase and any riders and addenda ("Contract"):

I. DESCRIPTION:

(a) Legal description of the Real Property located in Columbia County, Florida: Lot #24 Creekside

(b) Street address, city, zip, of the Property: 177 SW Peter Coyle Court Lake City Fl 32025

(c) Personal Property includes existing range(s), refrigerator(s), dishwasher(s), ceiling fan(s), light fixture(s), and window treatment(s) unless specifically excluded below.

Other items included are:

Items of Personal Property (and leased items, if any) excluded are:

Vacant Lot

II. PURCHASE PRICE (U.S. currency): $ 24,900.00

PAYMENT:

(a) Deposit held in escrow by Bishop Realty (Escrow Agent) in the amount of (checks subject to clearance) $ 500.00

(b) Additional escrow deposit to be made to Escrow Agent within _____ days after Effective Date (see Paragraph III) in the amount of. $

(c) Financing (see Paragraph IV) in the amount of $

(d) Other OWNER FINANCING $

(e) Balance to close by cash, wire transfer or LOCALLY DRAWN cashier's or official bank check(s), subject to adjustments or prorations $ 19,900.00

$ 4500.00

III. TIME FOR ACCEPTANCE OF OFFER AND COUNTEROFFERS; EFFECTIVE DATE:

(a) If this offer is not executed by and delivered to all parties OR FACT OF EXECUTION communicated in writing between the parties on or before _____, the deposit(s) will, at Buyer's option, be returned and this offer withdrawn. **UNLESS OTHERWISE STATED, THE TIME FOR ACCEPTANCE OF ANY COUNTEROFFERS SHALL BE 2 DAYS FROM THE DATE THE COUNTEROFFER IS DELIVERED.**

(b) The date of Contract ("Effective Date") will be the date when the last one of the Buyer and Seller has signed or initialed this offer or the final counteroffer. If such date is not otherwise set forth in this Contract, then the "Effective Date" shall be the date determined above for acceptance of this offer or, if applicable, the final counteroffer.

IV. FINANCING:

☐ (a) This is a cash transaction with no contingencies for financing;

☐ (b) This Contract is contingent on Buyer obtaining approval of a loan ("Loan Approval") within NA days (if blank, then 30 days) after Effective Date ("Loan Approval Date") for (CHECK ONLY ONE): ☐ a fixed; ☐ an adjustable; or ☐ a fixed or adjustable rate loan, in the principal amount of $ NA, at an initial interest rate not to exceed NA %, discount and origination fees not to exceed NA % of principal amount, and for a term of NA years. Buyer will make application within NA days (if blank, then 5 days) after Effective Date. Buyer shall use reasonable diligence to: obtain Loan Approval **and notify Seller in writing of Loan Approval by Loan Approval Date;** satisfy terms and conditions of the Loan Approval; and close the loan. Loan Approval which requires a condition related to the sale of other property shall not be deemed Loan Approval for purposes of this subparagraph. Buyer shall pay all loan expenses. If Buyer does not deliver written notice to Seller by Loan Approval Date stating Buyer has either obtained Loan Approval or waived this financing contingency, then either party may cancel this Contract by delivering written notice ("Cancellation Notice") to the other, not later than seven (7) days prior to Closing. Seller's Cancellation Notice must state that Buyer has three (3) days to deliver to Seller written notice waiving this financing contingency. If Buyer has used due diligence and has not obtained Loan Approval before cancellation as provided above, Buyer shall be refunded the deposit(s). Unless this financing contingency has been waived, this Contract shall remain subject to the satisfaction, by Closing, of those conditions of Loan Approval related to the Property;

☐ (c) Assumption of existing mortgage (see rider for terms); or

☒ (d) Purchase money note and mortgage to Seller (see Standards B and K and riders; addenda; or special clauses for terms).

V. TITLE EVIDENCE: At least — days (if blank, then 5 days) before Closing a title insurance commitment with legible copies of instruments listed as exceptions attached thereto ("Title Commitment") and, after Closing, an owner's policy of title insurance (see Standard A for terms) shall be obtained by:

SEE ATTACHED AGREEMENT FOR DEED

(CHECK ONLY ONE): ☐ (1) Seller, at Seller's expense and delivered to Buyer or Buyer's attorney; or

☐ (2) Buyer at Buyer's expense.

(CHECK HERE): ☐ If an abstract of title is to be furnished instead of title insurance, and attach rider for terms.

VI. CLOSING DATE: This transaction shall be closed and the closing documents delivered on 2-25-05 ("Closing"), unless modified by other provisions of this Contract. If Buyer is unable to obtain Hazard, Wind, Flood, or Homeowners' insurance at a reasonable rate due to extreme weather conditions, Buyer may delay Closing for up to 5 days after such coverage becomes available.

VII. RESTRICTIONS; EASEMENTS; LIMITATIONS: Seller shall convey marketable title subject to: comprehensive land use plans, zoning, restrictions, prohibitions and other requirements imposed by governmental authority; restrictions and matters appearing on the plat or otherwise

 © 2004 Florida Association of REALTORS® and The Florida Bar All Rights Reserved

on to the subdivision; outstanding oil, gas and mineral rights of record without right of entry; unplatted public utility easements of record ated contiguous to real property lines and not more than 10 feet in width as to the rear or front lines and 7 1/2 feet in width as to the side nes); taxes for year of Closing and subsequent years; and assumed mortgages and purchase money mortgages, if any (if additional items, see addendum); provided, that there exists at Closing no violation of the foregoing and none prevent use of the Property for

Residential purpose(s).

VIII. OCCUPANCY: Seller shall deliver occupancy of Property to Buyer at time of Closing unless otherwise stated herein. If Property is intended to be rented or occupied beyond Closing, the fact and terms thereof and the tenant(s) or occupants shall be disclosed pursuant to Standard F. If occupancy is to be delivered before Closing, Buyer assumes all risks of loss to Property from date of occupancy, shall be responsible and liable for maintenance from that date, and shall be deemed to have accepted Property in its existing condition as of time of taking occupancy.

IX. TYPEWRITTEN OR HANDWRITTEN PROVISIONS: Typewritten or handwritten provisions, riders and addenda shall control all printed provisions of this Contract in conflict with them.

X. ASSIGNABILITY: (CHECK ONLY ONE): Buyer ❑ may assign and thereby be released from any further liability under this Contract; ❑ may assign but not be released from liability under this Contract; or ❑ may not assign this Contract.

XI. DISCLOSURES:

(a) ❑ CHECK HERE if the Property is subject to a special assessment lien imposed by a public body payable in installments which continue beyond Closing and, if so, specify who shall pay amounts due after Closing: ❑ Seller ❑ Buyer ❑ Other (see addendum).

(b) Radon is a naturally occurring radioactive gas that when accumulated in a building in sufficient quantities may present health risks to persons who are exposed to it over time. Levels of radon that exceed federal and state guidelines have been found in buildings in Florida. Additional information regarding radon or radon testing may be obtained from your County Public Health unit.

(c) Mold is naturally occurring and may cause health risks or damage to property. If Buyer is concerned or desires additional information regarding mold, Buyer should contact an appropriate professional.

(d) Buyer acknowledges receipt of the Florida Energy-Efficiency Rating Information Brochure required by Section 553.996, F.S.

(e) If the real property includes pre-1978 residential housing then a lead-based paint rider is mandatory.

(f) If Seller is a "foreign person" as defined by the Foreign Investment in Real Property Tax Act, the parties shall comply with that Act.

(g) **BUYER SHOULD NOT EXECUTE THIS CONTRACT UNTIL BUYER HAS RECEIVED AND READ THE HOMEOWNERS' ASSOCIATION/COMMUNITY DISCLOSURE.**

(h) PROPERTY TAX DISCLOSURE SUMMARY: BUYER SHOULD NOT RELY ON THE SELLER'S CURRENT PROPERTY TAXES AS THE AMOUNT OF PROPERTY TAXES THAT THE BUYER MAY BE OBLIGATED TO PAY IN THE YEAR SUBSEQUENT TO PURCHASE. A CHANGE OF OWNERSHIP OR PROPERTY IMPROVEMENTS TRIGGERS REASSESSMENTS OF THE PROPERTY THAT COULD RESULT IN HIGHER PROPERTY TAXES. IF YOU HAVE ANY QUESTIONS CONCERNING VALUATION, CONTACT THE COUNTY PROPERTY APPRAISER'S OFFICE FOR INFORMATION.

XII. MAXIMUM REPAIR COSTS: Seller shall not be responsible for payments in excess of:

(a) $_____ for treatment and repair under Standard D (if blank, then 1.5% of the Purchase Price).

(b) $_____ for repair and replacement under Standard N not caused by Wood Destroying Organisms (if blank, then 1.5% of the Purchase Price).

XIII. HOME WARRANTY: ❑ Seller ❑ Buyer ❑ N/A will pay for a home warranty plan issued by _____ at a cost not to exceed $_____.

XIV. RIDERS; ADDENDA; SPECIAL CLAUSES: CHECK those riders which are applicable AND are attached to and made part of this Contract:

❑ CONDOMINIUM ❑ VA/FHA ❑ HOMEOWNERS' ASSN. ❑ LEAD-BASED PAINT ❑ COASTAL CONSTRUCTION CONTROL LINE
❑ INSULATION ❑ "AS IS" ❑ Other Comprehensive Rider Provisions ❑ Addenda

Special Clause(s): Seller to hold financing with Agreement for Deed. 19,900.00 @ 7% interest & amortize over 5 year period. Balloon in 3 years. Principal & Interest Payments of 394.04 to be paid monthly. No pre payment penalty. Buyer given deed restrictions.

XV. STANDARDS FOR REAL ESTATE TRANSACTIONS ("Standards"): Buyer and Seller acknowledge receipt of a copy of Standards A through Y on the reverse side or attached, which are incorporated as part of this Contract.

THIS IS INTENDED TO BE A LEGALLY BINDING CONTRACT. IF NOT FULLY UNDERSTOOD, SEEK THE ADVICE OF AN ATTORNEY PRIOR TO SIGNING.

THIS FORM HAS BEEN APPROVED BY THE FLORIDA ASSOCIATION OF REALTORS® AND THE FLORIDA BAR.
Approval does not constitute an opinion that any of the terms and conditions in this Contract should be accepted by the parties in a particular transaction. Terms and conditions should be negotiated based upon the respective interests, objectives and bargaining positions of all interested persons.

AN ASTERISK(*) FOLLOWING A LINE NUMBER IN THE MARGIN INDICATES THE LINE CONTAINS A BLANK TO BE COMPLETED.

(BUYER)	(DATE) 2/17/05	(SELLER)	(DATE)
(BUYER)	(DATE)	(SELLER)	(DATE) 2/18/05

Buyers' address for purposes of notice _____ Sellers' address for purposes of notice _____

_____ Phone _____ Phone

BROKERS: The brokers (including cooperating brokers, if any) named below are the only brokers entitled to compensation in connection with this Contract:

Name: None — Cooperating Brokers, if any

Bishop Realty Inc. — Listing Broker

STATE OF FLORIDA
DEPARTMENT OF HEALTH

APPLICATION FOR ONSITE SEWAGE DISPOSAL SYSTEM CONSTRUCTION PERMIT

Permit Application Number 05-0857

PART II - SITE PLAN

Scale: Each block represents 5 feet and 1 inch = 50 feet.

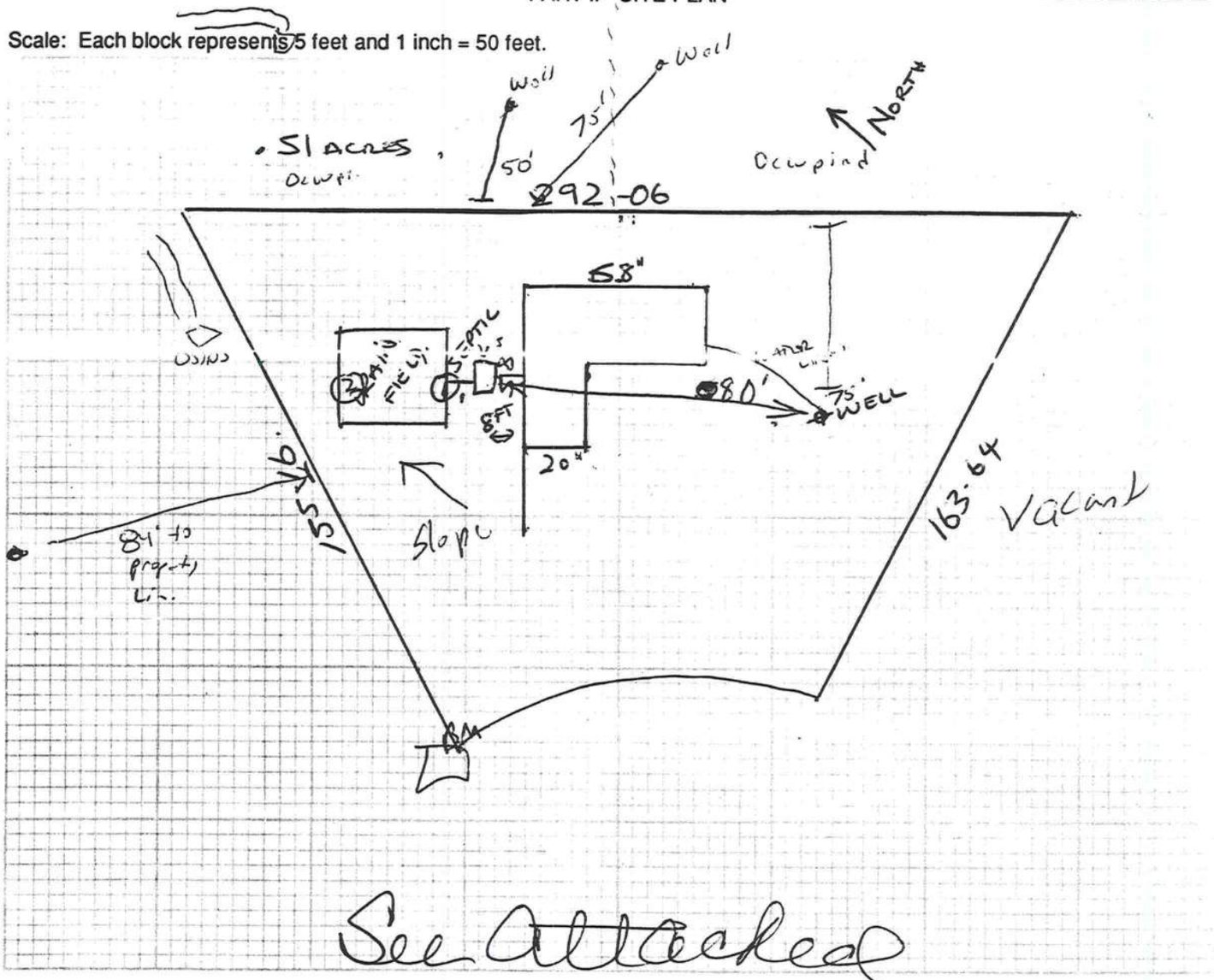

See Attached

Notes:

Site Plan submitted by: Signature Title

Plan Approved ✓ Not Approved ____ Date 8-22-05

By Columbia County Health Department

ALL CHANGES MUST BE APPROVED BY THE COUNTY HEALTH DEPARTMENT

DH 4015, 10/96 (Replaces HRS-H Form 4015 which may be used)
(Stock Number: 5744-002-4015-6)

EREOF RECORDED
BLIC RECORDS OF

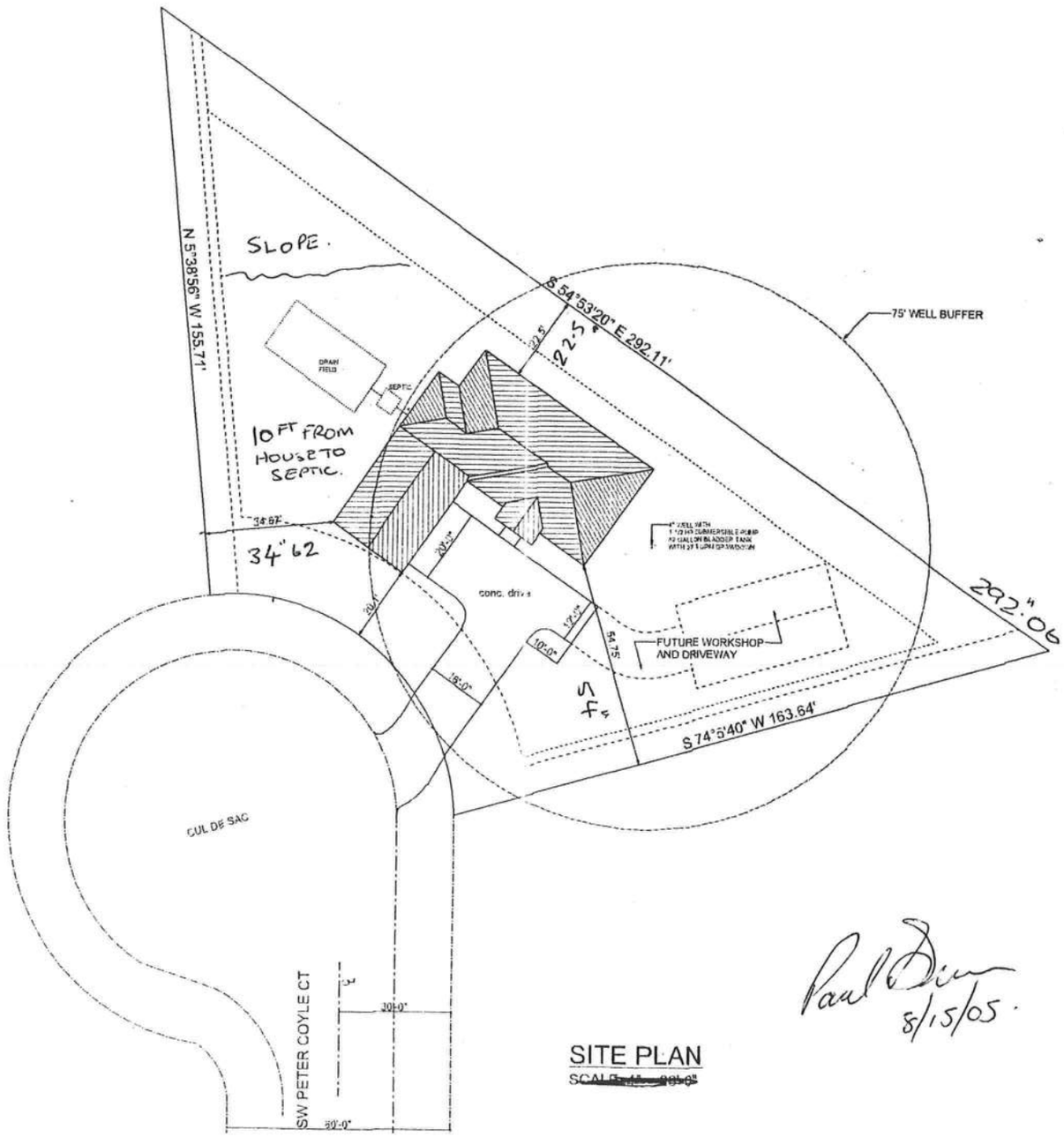

Paul Dim
8/15/05.

SITE PLAN
SCALE: ~~1" = 60'-0"~~

FORM 600A-2001

FLORIDA ENERGY EFFICIENCY CODE FOR BUILDING CONSTRUCTION

Florida Department of Community Affairs

Residential Whole Building Performance Method A

Project Name:	**Paul Brown**	Builder:	
Address:		Permitting Office:	Columbia.
City, State:	,	Permit Number:	
Owner:		Jurisdiction Number:	22100 U
Climate Zone:	**South**		

1. New construction or existing		New	
2. Single family or multi-family		Single family	
3. Number of units, if multi-family		1	
4. Number of Bedrooms		4	
5. Is this a worst case?		No	
6. Conditioned floor area (ft²)		3540 ft²	
7. Glass area & type	Single Pane	Double Pane	
a. Clear glass, default U-factor	0.0 ft²	476.0 ft²	
b. Default tint	0.0 ft²	0.0 ft²	
c. Labeled U or SHGC	0.0 ft²	0.0 ft²	
8. Floor types			
a. Slab-On-Grade Edge Insulation		R=0.0, 232.0(p) ft	
b. N/A			
c. N/A			
9. Wall types			
a. Frame, Wood, Exterior		R=13.0, 1856.0 ft²	
b. N/A			
c. N/A			
d. N/A			
e. N/A			
10. Ceiling types			
a. Under Attic		R=30.0, 3462.8 ft²	
b. N/A			
c. N/A			
11. Ducts			
a. Sup: Unc. Ret: Unc. AH: Interior		Sup. R=6.0, 58.0 ft	
b. N/A			

12. Cooling systems		
a. Central Unit	Cap: 72.0 kBtu/hr	
	SEER: 12.00	
b. N/A		
c. N/A		
13. Heating systems		
a. Electric Heat Pump	Cap: 72.0 kBtu/hr	
	HSPF: 7.40	
b. N/A		
c. N/A		
14. Hot water systems		
a. Electric Resistance	Cap: 50.0 gallons	
	EF: 0.90	
b. N/A		
c. Conservation credits (HR-Heat recovery, Solar DHP-Dedicated heat pump)		
15. HVAC credits (CF-Ceiling fan, CV-Cross ventilation, HF-Whole house fan, PT-Programmable Thermostat, MZ-C-Multizone cooling, MZ-H-Multizone heating)	PT, CF,	

Glass/Floor Area: 0.13

Total as-built points: 38701
Total base points: 52531

PASS

I hereby certify that the plans and specifications covered by this calculation are in compliance with the Florida Energy Code.

PREPARED BY: William H. Freeman

DATE: 7/13/05

I hereby certify that this building, as designed, is in compliance with the Florida Energy Code.

OWNER/AGENT: _____

DATE: _____

Review of the plans and specifications covered by this calculation indicates compliance with the Florida Energy Code. Before construction is completed this building will be inspected for compliance with Section 553.908 Florida Statutes.

GREAT SEAL OF THE STATE OF FLORIDA
IN GOD WE TRUST

BUILDING OFFICIAL: _____

DATE: _____

EnergyGauge® (Version: FLRCPB v3.30)

FORM 600A-2001

SUMMER CALCULATIONS

Residential Whole Building Performance Method A - Details

ADDRESS: , , , PERMIT #:

BASE

GLASS TYPES

.18 X	Conditioned Floor Area	X BSPM	= Points
.18	3540.0	32.50	20709.0

WALL TYPES	Area	X BSPM	= Points
Adjacent	0.0	0.00	0.0
Exterior	1856.0	2.70	5011.2
Base Total:	**1856.0**		**5011.2**

DOOR TYPES	Area	X BSPM	= Points
Adjacent	0.0	0.00	0.0
Exterior	136.0	6.40	870.4
Base Total:	**136.0**		**870.4**

CEILING TYPES	Area	X BSPM	= Points
Under Attic	3148.0	2.80	8814.4
Base Total:	**3148.0**		**8814.4**

AS-BUILT

Type/SC	Overhang Ornt	Len	Hgt	Area X	SPM X	SOF =	Points
Double, Clear	N	1.5	6.0	90.0	31.93	0.94	2702.2
Double, Clear	N	1.5	6.0	25.0	31.93	0.94	750.6
Double, Clear	N	1.5	6.0	50.0	31.93	0.94	1501.2
Double, Clear	N	1.5	6.0	45.0	31.93	0.94	1351.1
Double, Clear	E	1.5	6.0	15.0	68.60	0.92	944.1
Double, Clear	E	1.5	5.0	16.0	68.60	0.88	967.8
Double, Clear	E	1.5	6.0	30.0	68.60	0.92	1888.1
Double, Clear	S	1.5	6.0	40.0	58.45	0.87	2043.8
Double, Clear	S	1.5	6.0	50.0	58.45	0.87	2554.8
Double, Clear	S	1.5	6.0	20.0	58.45	0.87	1021.9
Double, Clear	S	1.5	7.0	24.0	58.45	0.91	1276.9
Double, Clear	SE	1.5	5.0	16.0	69.60	0.85	950.5
Double, Clear	S	1.5	5.0	16.0	58.45	0.83	772.4
Double, Clear	W	1.5	3.0	6.0	61.59	0.75	277.0
Double, Clear	W	1.5	4.0	9.0	61.59	0.83	460.0
Double, Clear	NW	1.5	4.0	9.0	42.35	0.85	325.3
Double, Clear	NW	1.5	6.0	15.0	42.35	0.93	587.9
As-Built Total:				**476.0**			**20375.5**

Type	R-Value	Area X	SPM =	Points
Frame, Wood, Exterior	13.0	1856.0	2.40	4454.4
As-Built Total:		**1856.0**		**4454.4**

Type	Area X	SPM =	Points
Exterior Insulated	136.0	6.40	870.4
As-Built Total:	**136.0**		**870.4**

Type	R-Value	Area X	SPM X SCM =	Points
Under Attic	30.0	3462.8	2.77 X 1.00	9592.0
As-Built Total:		**3462.8**		**9592.0**

FORM 600A-2001

SUMMER CALCULATIONS

Residential Whole Building Performance Method A - Details

ADDRESS: , , , PERMIT #:

BASE				AS-BUILT						
FLOOR TYPES	Area X	BSPM =	Points	Type	R-Value	Area X	SPM	=	Points
Slab	232.0(p)	-20.0	-4640.0	Slab-On-Grade Edge Insulation	0.0	232.0(p	-20.00		-4640.0
Raised	0.0	0.00	0.0						
Base Total:			**-4640.0**	**As-Built Total:**		**232.0**			**-4640.0**
INFILTRATION	Area X	BSPM =	Points			Area X	SPM	=	Points
	3540.0	18.79	66516.6			3540.0	18.79		66516.6
Summer Base Points:			**97281.6**	**Summer As-Built Points:**					**97168.9**
Total Summer Points	X System Multiplier	=	Cooling Points	Total Component	X Cap Ratio	X Duct Multiplier (DM x DSM x AHU)	X System Multiplier	X Credit Multiplier	= Cooling Points
97281.6	**0.4266**		**41500.3**	97168.9 **97168.9**	1.000 **1.00**	(1.073 x 1.165 x 0.90) **1.125**	0.284 **0.284**	0.902 **0.902**	28036.0 **28036.0**

FORM 600A-2001

WINTER CALCULATIONS

Residential Whole Building Performance Method A - Details

ADDRESS: , , , PERMIT #:

BASE

GLASS TYPES

.18 X	Conditioned Floor Area	X BWPM	= Points
.18	3540.0	2.36	1503.8

WALL TYPES	Area	X BWPM	= Points
Adjacent	0.0	0.00	0.0
Exterior	1856.0	0.60	1113.6
Base Total:	**1856.0**		**1113.6**

DOOR TYPES	Area	X BWPM	= Points
Adjacent	0.0	0.00	0.0
Exterior	136.0	1.80	244.8
Base Total:	**136.0**		**244.8**

CEILING TYPES	Area	X BWPM	= Points
Under Attic	3148.0	0.10	314.8
Base Total:	**3148.0**		**314.8**

AS-BUILT

Type/SC	Overhang Ornt	Len	Hgt	Area	X WPM	X WOF	= Points
Double, Clear	N	1.5	6.0	90.0	4.38	0.99	390.8
Double, Clear	N	1.5	6.0	25.0	4.38	0.99	108.6
Double, Clear	N	1.5	6.0	50.0	4.38	0.99	217.1
Double, Clear	N	1.5	6.0	45.0	4.38	0.99	195.4
Double, Clear	E	1.5	6.0	15.0	3.30	1.02	50.5
Double, Clear	E	1.5	5.0	16.0	3.30	1.03	54.2
Double, Clear	E	1.5	6.0	30.0	3.30	1.02	101.1
Double, Clear	S	1.5	6.0	40.0	3.12	1.02	127.0
Double, Clear	S	1.5	6.0	50.0	3.12	1.02	158.8
Double, Clear	S	1.5	6.0	20.0	3.12	1.02	63.5
Double, Clear	S	1.5	7.0	24.0	3.12	1.01	75.5
Double, Clear	SE	1.5	5.0	16.0	2.87	1.05	48.4
Double, Clear	S	1.5	5.0	16.0	3.12	1.04	51.7
Double, Clear	W	1.5	3.0	6.0	3.98	1.01	24.0
Double, Clear	W	1.5	4.0	9.0	3.98	1.00	35.8
Double, Clear	NW	1.5	4.0	9.0	4.35	0.99	38.7
Double, Clear	NW	1.5	6.0	15.0	4.35	0.99	64.8
As-Built Total:				**476.0**			**1805.9**

Type	R-Value	Area	X WPM	= Points
Frame, Wood, Exterior	13.0	1856.0	0.60	1113.6
As-Built Total:		**1856.0**		**1113.6**

Type	Area	X WPM	= Points
Exterior Insulated	136.0	1.80	244.8
As-Built Total:	**136.0**		**244.8**

Type	R-Value	Area	X WPM X WCM	= Points
Under Attic	30.0	3462.8	0.10 X 1.00	346.3
As-Built Total:		**3462.8**		**346.3**

FORM 600A-2001

WINTER CALCULATIONS

Residential Whole Building Performance Method A - Details

ADDRESS: , , , PERMIT #:

BASE				AS-BUILT					
FLOOR TYPES	Area X	BWPM =	Points	Type	R-Value	Area X	WPM	=	Points
Slab	232.0(p)	-2.1	-487.2	Slab-On-Grade Edge Insulation	0.0	232.0(p	-2.10		-487.2
Raised	0.0	0.00	0.0						
Base Total:			**-487.2**	**As-Built Total:**		**232.0**			**-487.2**
INFILTRATION	Area X	BWPM =	Points			Area X	WPM	=	Points
	3540.0	-0.06	-212.4			3540.0	-0.06		-212.4
Winter Base Points:			**2477.4**	**Winter As-Built Points:**					**2811.0**
Total Winter Points	X System Multiplier	= Heating Points		Total Component	X Cap Ratio	X Duct Multiplier (DM x DSM x AHU)	X System Multiplier	X Credit Multiplier	= Heating Points
2477.4	**0.6274**	**1554.3**		2811.0 **2811.0**	1.000 **1.00**	(1.099 x 1.137 x 0.91) **1.137**	0.461 **0.461**	0.950 **0.950**	1399.3 **1399.3**

FORM 600A-2001

WATER HEATING & CODE COMPLIANCE STATUS

Residential Whole Building Performance Method A - Details

ADDRESS: , , ,	PERMIT #:

BASE				AS-BUILT							
WATER HEATING											
Number of Bedrooms	X Multiplier	= Total		Tank Volume	EF	Number of Bedrooms	X Tank Ratio	X Multiplier	X Credit Multiplier	= Total	
4	2369.00	9476.0		50.0	0.90	4	1.00	2316.36	1.00	9265.4	
				As-Built Total:						**9265.4**	

CODE COMPLIANCE STATUS

BASE				AS-BUILT			
Cooling Points +	Heating Points +	Hot Water Points =	Total Points	Cooling Points +	Heating Points +	Hot Water Points =	Total Points
41500	**1554**	**9476**	**52531**	**28036**	**1399**	**9265**	**38701**

PASS

Code Compliance Checklist

Residential Whole Building Performance Method A - Details

ADDRESS: , , , PERMIT #:

6A-21 INFILTRATION REDUCTION COMPLIANCE CHECKLIST

COMPONENTS	SECTION	REQUIREMENTS FOR EACH PRACTICE	CHECK
Exterior Windows & Doors	606.1.ABC.1.1	Maximum:.3 cfm/sq.ft. window area; .5 cfm/sq.ft. door area.	
Exterior & Adjacent Walls	606.1.ABC.1.2.1	Caulk, gasket, weatherstrip or seal between: windows/doors & frames, surrounding wall; foundation & wall sole or sill plate; joints between exterior wall panels at corners; utility penetrations; between wall panels & top/bottom plates; between walls and floor. EXCEPTION: Frame walls where a continuous infiltration barrier is installed that extends from, and is sealed to, the foundation to the top plate.	
Floors	606.1.ABC.1.2.2	Penetrations/openings >1/8" sealed unless backed by truss or joint members. EXCEPTION: Frame floors where a continuous infiltration barrier is installed that is sealed to the perimeter, penetrations and seams.	
Ceilings	606.1.ABC.1.2.3	Between walls & ceilings; penetrations of ceiling plane of top floor; around shafts, chases, soffits, chimneys, cabinets sealed to continuous air barrier; gaps in gyp board & top plate; attic access. EXCEPTION: Frame ceilings where a continuous infiltration barrier is installed that is sealed at the perimeter, at penetrations and seams.	
Recessed Lighting Fixtures	606.1.ABC.1.2.4	Type IC rated with no penetrations, sealed; or Type IC or non-IC rated, installed inside a sealed box with 1/2" clearance & 3" from insulation; or Type IC rated with < 2.0 cfm from conditioned space, tested.	
Multi-story Houses	606.1.ABC.1.2.5	Air barrier on perimeter of floor cavity between floors.	
Additional Infiltration reqts	606.1.ABC.1.3	Exhaust fans vented to outdoors, dampers; combustion space heaters comply with NFPA, have combustion air.	

6A-22 OTHER PRESCRIPTIVE MEASURES (must be met or exceeded by all residences.)

COMPONENTS	SECTION	REQUIREMENTS	CHECK
Water Heaters	612.1	Comply with efficiency requirements in Table 6-12. Switch or clearly marked circuit breaker (electric) or cutoff (gas) must be provided. External or built-in heat trap required.	
Swimming Pools & Spas	612.1	Spas & heated pools must have covers (except solar heated). Non-commercial pools must have a pump timer. Gas spa & pool heaters must have a minimum thermal efficiency of 78%.	
Shower heads	612.1	Water flow must be restricted to no more than 2.5 gallons per minute at 80 PSIG.	
Air Distribution Systems	610.1	All ducts, fittings, mechanical equipment and plenum chambers shall be mechanically attached, sealed, insulated, and installed in accordance with the criteria of Section 610. Ducts in unconditioned attics: R-6 min. insulation.	
HVAC Controls	607.1	Separate readily accessible manual or automatic thermostat for each system.	
Insulation	604.1, 602.1	Ceilings-Min. R-19. Common walls-Frame R-11 or CBS R-3 both sides. Common ceiling & floors R-11.	

ENERGY PERFORMANCE LEVEL (EPL) DISPLAY CARD

ESTIMATED ENERGY PERFORMANCE SCORE* = 87.9

The higher the score, the more efficient the home.

1. New construction or existing		New	
2. Single family or multi-family		Single family	
3. Number of units, if multi-family		1	
4. Number of Bedrooms		4	
5. Is this a worst case?		No	
6. Conditioned floor area (ft²)		3540 ft²	
7. Glass area & type	Single Pane	Double Pane	
a. Clear - single pane	0.0 ft²	476.0 ft²	
b. Clear - double pane	0.0 ft²	0.0 ft²	
c. Tint/other SHGC - single pane	0.0 ft²	0.0 ft²	
d. Tint/other SHGC - double pane			
8. Floor types			
a. Slab-On-Grade Edge Insulation		R=0.0, 232.0(p) ft	
b. N/A			
c. N/A			
9. Wall types			
a. Frame, Wood, Exterior		R=13.0, 1856.0 ft²	
b. N/A			
c. N/A			
d. N/A			
e. N/A			
10. Ceiling types			
a. Under Attic		R=30.0, 3462.8 ft²	
b. N/A			
c. N/A			
11. Ducts			
a. Sup: Unc. Ret: Unc. AH: Interior		Sup. R=6.0, 58.0 ft	
b. N/A			

12. Cooling systems		
a. Central Unit	Cap: 72.0 kBtu/hr	
	SEER: 12.00	
b. N/A		
c. N/A		
13. Heating systems		
a. Electric Heat Pump	Cap: 72.0 kBtu/hr	
	HSPF: 7.40	
b. N/A		
c. N/A		
14. Hot water systems		
a. Electric Resistance	Cap: 50.0 gallons	
	EF: 0.90	
b. N/A		
c. Conservation credits (HR-Heat recovery, Solar DHP-Dedicated heat pump)		
15. HVAC credits (CF-Ceiling fan, CV-Cross ventilation, HF-Whole house fan, PT-Programmable Thermostat, MZ-C-Multizone cooling, MZ-H-Multizone heating)	PT, CF,	

I certify that this home has complied with the Florida Energy Efficiency Code For Building Construction through the above energy saving features which will be installed (or exceeded) in this home before final inspection. Otherwise, a new EPL Display Card will be completed based on installed Code compliant features.

Builder Signature: _____ Date: _____

Address of New Home: _____ City/FL Zip: _____

**NOTE: The home's estimated energy performance score is only available through the FLA/RES computer program. This is not a Building Energy Rating. If your score is 80 or greater (or 86 for a US EPA/DOE EnergyStar™ designation), your home may qualify for energy efficiency mortgage (EEM) incentives if you obtain a Florida Energy Gauge Rating. Contact the Energy Gauge Hotline at 321/638-1492 or see the Energy Gauge web site at www.fsec.ucf.edu for information and a list of certified Raters. For information about Florida's Energy Efficiency Code For Building Construction, contact the Department of Community Affairs at 850/488-7824.*

EnergyGauge® (Version: FLRCPB v3.30)

Residential System Sizing Calculation

Summary

Project Title:
Paul Brown

Code Only
Professional Version
Climate: South

6/21/2005

Location for weather data: Gainesville - User customized: Latitude(29) Temp Range(M)
Humidity data: Interior RH (50%) Outdoor wet bulb (78F) Humidity difference(51gr.)

Winter design temperature	31	F	Summer design temperature	98	F
Winter setpoint	70	F	Summer setpoint	75	F
Winter temperature difference	39	F	Summer temperature difference	23	F
Total heating load calculation	**45880**	**Btuh**	**Total cooling load calculation**	**48428**	**Btuh**
Submitted heating capacity	% of calc	Btuh	Submitted cooling capacity	% of calc	Btuh
Total (Electric Heat Pump)	156.9	72000	Sensible (SHR = 0.5)	91.3	36000
Heat Pump + Auxiliary(0.0kW)	156.9	72000	Latent	399.3	36000
			Total (Electric Heat Pump)	148.7	72000

WINTER CALCULATIONS

Winter Heating Load (for 3540 sqft)

Load component			Load	
Window total	476	sqft	13471	Btuh
Wall total	1856	sqft	5754	Btuh
Door total	136	sqft	2493	Btuh
Ceiling total	3463	sqft	4502	Btuh
Floor total	232	ft	7331	Btuh
Infiltration	236	cfm	10145	Btuh
Subtotal			**43695**	**Btuh**
Duct loss			2185	Btuh
TOTAL HEAT LOSS			**45880**	**Btuh**

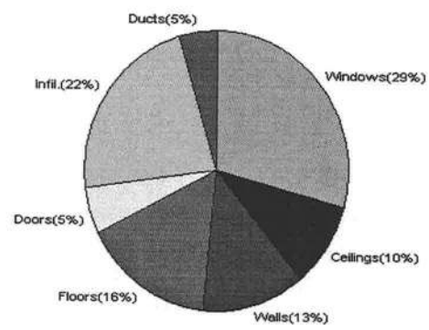

SUMMER CALCULATIONS

Summer Cooling Load (for 3540 sqft)

Load component			Load	
Window total	476	sqft	15924	Btuh
Wall total	1856	sqft	3972	Btuh
Door total	136	sqft	1697	Btuh
Ceiling total	3463	sqft	5402	Btuh
Floor total			0	Btuh
Infiltration	207	cfm	5235	Btuh
Internal gain			3600	Btuh
Subtotal(sensible)			**35830**	**Btuh**
Duct gain			3583	Btuh
Total sensible gain			**39413**	**Btuh**
Latent gain(infiltration)			7176	Btuh
Latent gain(internal)			1840	Btuh
Total latent gain			**9016**	**Btuh**
TOTAL HEAT GAIN			**48428**	**Btuh**

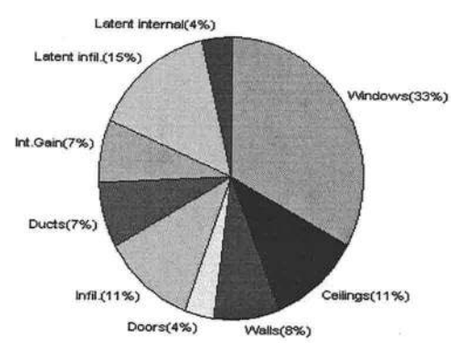

EnergyGauge® System Sizing based on ACCA Manual J.
PREPARED BY: Wilbell Inc
DATE: 7/13/05

EnergyGauge® FLRCPB v3.30

System Sizing Calculations - Winter

Residential Load - Component Details

Project Title:
Paul Brown

Code Only
Professional Version
Climate: South

Reference City: Gainesville (User customized) Winter Temperature Difference: 39.0 F 6/21/2005

Window	Panes/SHGC/Frame/U	Orientation	Area X	HTM=	Load
1	2, Clear, Metal, DEF	N	90.0	28.3	2547 Btuh
2	2, Clear, Metal, DEF	N	25.0	28.3	708 Btuh
3	2, Clear, Metal, DEF	N	50.0	28.3	1415 Btuh
4	2, Clear, Metal, DEF	N	45.0	28.3	1274 Btuh
5	2, Clear, Metal, DEF	E	15.0	28.3	424 Btuh
6	2, Clear, Metal, DEF	E	16.0	28.3	453 Btuh
7	2, Clear, Metal, DEF	E	30.0	28.3	849 Btuh
8	2, Clear, Metal, DEF	S	40.0	28.3	1132 Btuh
9	2, Clear, Metal, DEF	S	50.0	28.3	1415 Btuh
10	2, Clear, Metal, DEF	S	20.0	28.3	566 Btuh
11	2, Clear, Metal, DEF	S	24.0	28.3	679 Btuh
12	2, Clear, Metal, DEF	SE	16.0	28.3	453 Btuh
13	2, Clear, Metal, DEF	S	16.0	28.3	453 Btuh
14	2, Clear, Metal, DEF	W	6.0	28.3	170 Btuh
15	2, Clear, Metal, DEF	W	9.0	28.3	255 Btuh
16	2, Clear, Metal, DEF	NW	9.0	28.3	255 Btuh
17	2, Clear, Metal, DEF	NW	15.0	28.3	424 Btuh
	Window Total		476		13471 Btuh
Walls	Type	R-Value	Area X	HTM=	Load
1	Frame - Exterior	13.0	1856	3.1	5754 Btuh
	Wall Total		1856		5754 Btuh
Doors	Type		Area X	HTM=	Load
1	Insulated - Exter		136	18.3	2493 Btuh
	Door Total		136		2493Btuh
Ceilings	Type	R-Value	Area X	HTM=	Load
1	Under Attic	30.0	3463	1.3	4502 Btuh
	Ceiling Total		3463		4502Btuh
Floors	Type	R-Value	Size X	HTM=	Load
1	Slab-On-Grade Edge Insul	0	232.0 ft(p)	31.6	7331 Btuh
	Floor Total		232		7331 Btuh
Infiltration	Type	ACH X	Building Volume	CFM=	Load
	Natural	0.40	35400(sqft)	236	10145 Btuh
	Mechanical			0	0 Btuh
	Infiltration Total			236	10145 Btuh

Totals for Heating	**Subtotal**	**43695 Btuh**
	Duct Loss(using duct multiplier of 0.05)	**2185 Btuh**
	Total Btuh Loss	**45880 Btuh**

EnergyGauge® FLRCPB v3.30

Manual J Winter Calculations

Residential Load - Component Details (continued)

Project Title:
Paul Brown

Code Only
Professional Version
Climate: South

6/21/2005

Key: Window types (SHGC - Shading coefficient of glass as SHGC numerical value or as clear or tint)
(Frame types - metal, wood or insulated metal)
(U - Window U-Factor or 'DEF' for default)
(HTM - ManualJ Heat Transfer Multiplier)
Key: Floor size (perimeter(p) for slab-on-grade or area for all other floor types)

System Sizing Calculations - Summer

Residential Load - Component Details

Project Title:
Paul Brown

Code Only
Professional Version
Climate: South

Reference City: Gainesville (User customized) Summer Temperature Difference: 23.0 F 6/21/2005

Window	Type Panes/SHGC/U/InSh/ExSh	Ornt	Overhang Len	Hgt	Window Area(sqft) Gross	Shaded	Unshaded	HTM Shaded	Unshaded	Load
1	2, Clear, DEF, N, N	N	1.5	6	90.0	0.0	90.0	24	24	2160 Btuh
2	2, Clear, DEF, N, N	N	1.5	6	25.0	0.0	25.0	24	24	600 Btuh
3	2, Clear, DEF, N, N	N	1.5	6	50.0	0.0	50.0	24	24	1200 Btuh
4	2, Clear, DEF, N, N	N	1.5	6	45.0	0.0	45.0	24	24	1080 Btuh
5	2, Clear, DEF, N, N	E	1.5	6	15.0	0.0	15.0	24	74	1110 Btuh
6	2, Clear, DEF, N, N	E	1.5	5	16.0	1.0	15.0	24	74	1135 Btuh
7	2, Clear, DEF, N, N	E	1.5	6	30.0	4.0	26.0	24	74	2022 Btuh
8	2, Clear, DEF, N, N	S	1.5	6	40.0	40.0	0.0	24	39	960 Btuh
9	2, Clear, DEF, N, N	S	1.5	6	50.0	50.0	0.0	24	39	1200 Btuh
10	2, Clear, DEF, N, N	S	1.5	6	20.0	20.0	0.0	24	39	480 Btuh
11	2, Clear, DEF, N, N	S	1.5	7	24.0	24.0	0.0	24	39	576 Btuh
12	2, Clear, DEF, N, N	SE	1.5	5	16.0	6.1	9.9	24	64	780 Btuh
13	2, Clear, DEF, N, N	S	1.5	5	16.0	16.0	0.0	24	39	384 Btuh
14	2, Clear, DEF, N, N	W	1.5	3	6.0	1.7	4.3	24	74	359 Btuh
15	2, Clear, DEF, N, N	W	1.5	4	9.0	0.7	8.3	24	74	629 Btuh
16	2, Clear, DEF, N, N	NW	1.5	4	9.0	0.0	9.0	24	52	468 Btuh
17	2, Clear, DEF, N, N	NW	1.5	6	15.0	0.0	15.0	24	52	780 Btuh
	Window Total				476					15924 Btuh

	Type	R-Value	Area	HTM	Load
Walls 1	Frame - Exterior	13.0	1856.0	2.1	3972 Btuh
	Wall Total		1856.0		3972 Btuh
Doors 1	Insulated - Exter		136.0	12.5	1697 Btuh
	Door Total		136.0		1697 Btuh
Ceilings 1	Type/Color: Under Attic/Dark	30.0	3462.8	1.6	5402 Btuh
	Ceiling Total		3462.8		5402 Btuh
Floors 1	Type: Slab-On-Grade Edge Insulation	0.0	Size: 232.0 ft(p)	0.0	0 Btuh
	Floor Total		232.0		0 Btuh
Infiltration	Type	ACH	Volume	CFM=	Load
	Natural	0.35	35400	206.9	5235 Btuh
	Mechanical			0	0 Btuh
	Infiltration Total			207	5235 Btuh

	Occupants		Btuh/occupant		Appliance	Load
Internal gain	8	X	300	+	1200	3600 Btuh

Manual J Summer Calculations

Residential Load - Component Details (continued)

Project Title:
Paul Brown

Code Only
Professional Version
Climate: South

6/21/2005

Totals for Cooling	Subtotal	35830 Btuh
	Duct gain(using duct multiplier of 0.10)	3583 Btuh
	Total sensible gain	39413 Btuh
	Latent infiltration gain (for 51 gr. humidity difference)	7176 Btuh
	Latent occupant gain (8 people @ 230 Btuh per person)	1840 Btuh
	Latent other gain	0 Btuh
	TOTAL GAIN	48428 Btuh

Key: Window types (SHGC - Shading coefficient of glass as SHGC numerical value or as clear or tint)
(U - Window U-Factor or 'DEF' for default)
(InSh - Interior shading device: none(N), Blinds/Daperies(B) or Roller Shades(R))
(ExSh - Exterior shading device: none(N) or numerical value)
(Ornt - compass orientation)

TAMKO®
ROOFING PRODUCTS

January 31, 2002

TO: OUR FLORIDA CUSTOMERS:

Effective February 1, 2002, the following TAMKO shingles, as manufactured at TAMK s Tuscaloosa, Alabama, facility, comply with ASTM D-3161, Type I modified to 110 mph. esting was conducted using four nails per shingle. These shingles also comply with Florida Buil ng Code TAS 100 for wind driven rain.

- Glass-Seal AR
- Elite Glass-Seal AR
- ASTM Heritage 30 AR (formerly ASTM Heritage 25 AR)
- Heritage 40 AR (formerly Heritage 30 AR)
- Heritage 50 AR (formerly Heritage 40 AR)

All testing was performed by Florida State certified independent labs.

Please direct all questions to TAMKO's Technical Services Department at 1-800-641-46

TAMKO Roofing Products, Inc.

2300 35th STREET P.O. BOX 2149 TUSCALOOSA, AL 35403-2149 205-752-3555 FAX 205-349-2049

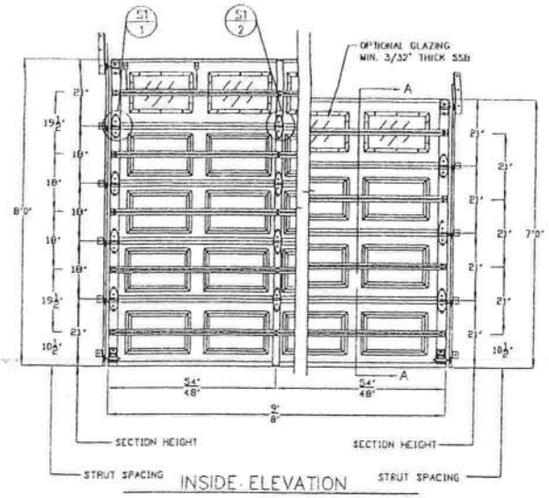

INSIDE ELEVATION

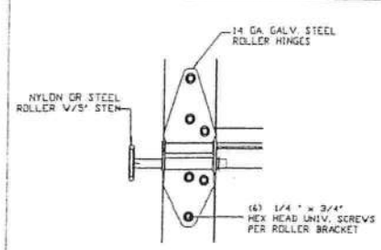

TYP. ROLLER BRACKET (S1 1)
N.T.S.

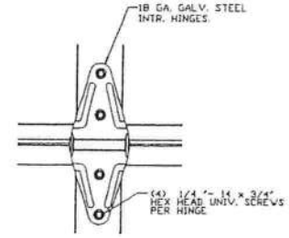

TYP. HINGE CONNECTION (S1 2)
N.T.S.

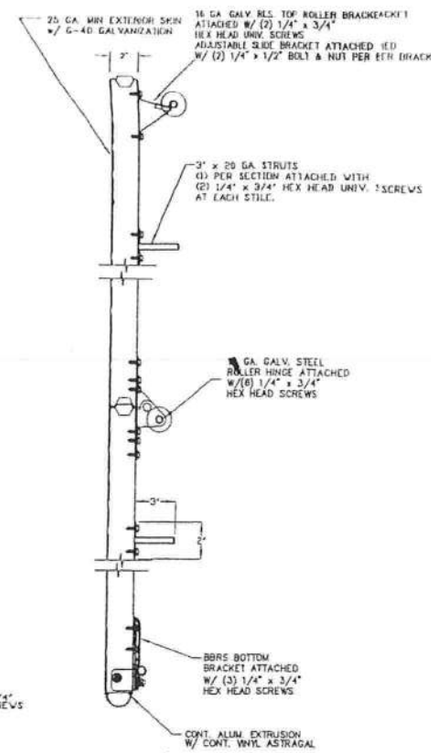

SECTION A-A (SIDE VIEW)

GLAZING OPTION CROSS SECTION

TEST No. SBC-SBD-013 ON OCTOBER 12, 1995 INCLUDED GLASS WINDOWS IN THE DOOR BEING USED. THE TEST PRESSURES WERE +48.4 PSF AND -54.7 PSF. BY COMPARISON, FOUR (4) WINDOWS MAY BE INSTALLED IN (1) ONE SECTION OF THE 8' X 7' AND 8' X 8' MODEL 600 AND 850 DOORS.

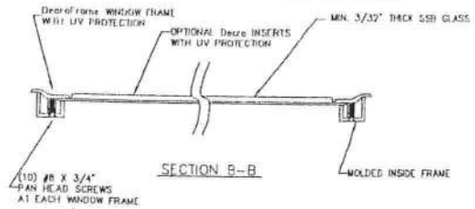

SECTION B-B

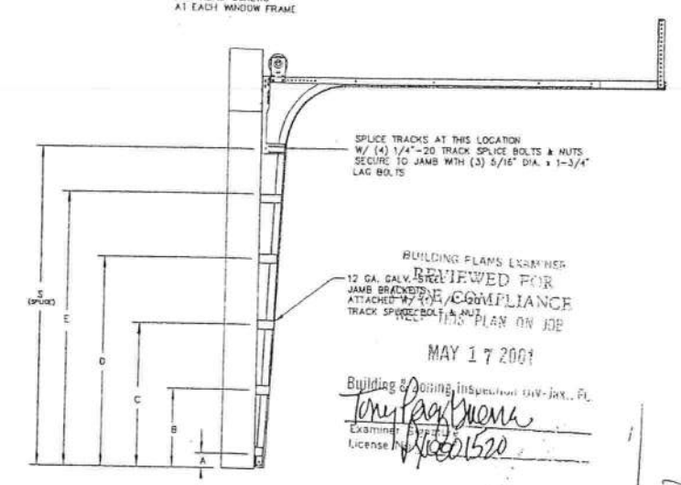

TRACK CONFIGURATION FOR 6'6" UP TO 8' TALL DOORS

BUILDING PLANS EXAMINER
REVIEWED FOR
CODE COMPLIANCE
KEEP THIS PLAN ON JOB
MAY 17 2001
Building & Zoning Inspection Div-Jax., FL
Examiner
License No. 16001520

JAMB BRACKET LOCATIONS

	A	B	C	D	E	S
6'-6"	4"	21-1/2"	39"	57"		70"
7'-0"	4"	21-1/2"	42"	63"		76"
7'-6"	4"	18"	36"	54"	72"	82"
8'-0"	4"	21-1/2"	39"	57"	75"	88"

SPECIFICATIONS AND NOTES

1. DOORS AND HARDWARE WILL BE DESIGNED, MANUFACTURED AND INSTALLED WITH STANDARDS AS SET FORTH BY DASMA.
2. DOOR SECTIONS SHALL BE 25 GA. (.019") MIN. ROLL FORMED LIGHT COMMERCIAL QUALITY, G-40 GALVANIZATION.
3. DOORS UPTO 7'6" HIGH CONSIST OF (4) SECTIONS AS SHOWN.
4. DOORS UPTO 8'0" HIGH CONSIST OF (5) SECTIONS AS SHOWN.
5. SUPPORTING STRUCTURAL ELEMENTS SHALL BE DESIGNED BY A REGISTERED PROFESSIONAL ENGINEER FOR WIND LOADS INDICATED ON THIS DRAWING IN ADDITION TO OTHER LOADINGS.
6. THE METHOD OF TESTING WAS IN SUBSTANTIAL CONFORMANCE WITH THE PROCEDURE DESCRIBED IN ASTM E330-90, AND THE SOUTHERN BUILDING CODE SECTION 1606 WIND LOAD DESIGN CRITERIA THE PRESSURES SHOWN ON THE DRAWINGS WERE CALCULATED USING THE FOLLOWING PARAMETERS
   - A. BASIC WIND SPEED OF 110 MPH
   - B. DOOR CAN BE INSTALLED WITH 5 FEET OF DOORS WIDTH INSIDE THE EDGE STRIP.
   - C. 15' MEAN ROOF HEIGHT AT ANY SLOPE
   - D. USE FACTOR OF 1.0
   - E. EXPOSURE RATING OF C

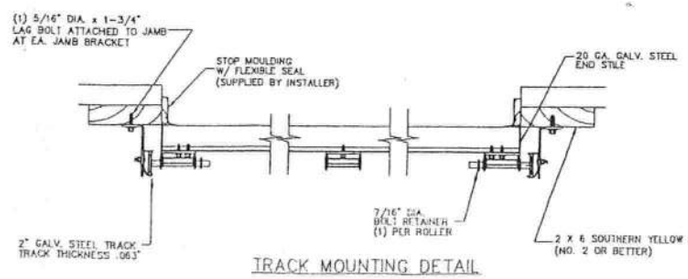

TRACK MOUNTING DETAIL

WOOD JAMB ATTACHMENT TO STRUCTURE

RATED FOR 110 MPH FASTEST-MILE BASIC WIND SPEEDS

VERTICAL JAMB ATTACHMENT TO WOOD FRAME STRUCTURE
5/16" X 3" LAG SCREWS STARTING 6" FROM ENDS THEN 24" O.C.

VERTICAL JAMB ATTACHMENT TO 2,000 PSI CONCRETE
HILTI KWIK BOLT 3/8" X 4" STARTING 6" FROM ENDS THEN 24" O.C.
HILTI SLEEVE ANCHOR 3/8" X 2-3/4" STARTING 6" FROM ENDS THEN 24" O.C.
ITW/RAMSET RED HEAD 3/8" X 3" STARTING 6" FROM ENDS THEN 24" O.C.

VERTICAL JAMB ATTACHMENT TO C-90 BLOCK
HILTI SLEEVE ANCHOR 3/8" X 2-3/4" STARTING 6" FROM ENDS THEN 24" O.C.
ITW/RAMSET TAPCON 1/4" X 2-3/4" STARTING 4" FROM ENDS, USE PAIRS OF FASTENERS (3" APART) AT 24" O.C.

*LAGS AND BOLTS CAN BE COUNTERSUNK TO PROVIDE A FLUSH MOUNTING SURFACE.
*PREPARATION OF WOOD JAMBS BY OTHERS

MAX SIZE 8' x 8'
DESIGN LOADS +28.7 PSF -31.3 PSF
TEST LOADS +43.0 PSF -46.8 PSF

REV	DESCRIPTION OF REVISION	DATE	BY

Amarr
7500 GRANDY CREEK DR. VENICE-SALEM, NC. 27603

MODEL #600 STRATFORD
MODEL #850 HERITAGE III

SIZE	DRAWN BY	DATE	DRAWING NUMBER
B	CHECKED BY	DATE	SBC-SBD-007-J
SCALE: NOT IN SCALE			SHEET 1 OF 1

4/19/01

Architectural Testing

ANSI/AAMA/NWWDA 101/I.S.2-97
TEST REPORT

Rendered to:

MI WINDOWS AND DOORS, INC.

SERIES/MODEL: 680
PRODUCT TYPE: Aluminum Horizontal Sliding Window (Fin Frame)

	Summary of Results		
Title	**Test Specimen #1**	**Test Specimen #2**	**Test Specimen #3**
Rating	HS-R30 126 x 59	HS-R40 71 x 59	HS-R35* 52 x 59
Operating Force	14 lbf max.	N/A	N/A
Air Infiltration	0.12 cfm/ft^2	N/A	N/A
Water Resistance Test Pressure	6.0 psf	N/A	N/A
Uniform Load Deflection Test Pressure	±30.0 psf	+40.0 psf/-40.7 psf	+35.3 psf/-50.0 psf
Uniform Load Structural Test Pressure	±45.0 psf	+60.0 psf/-61.1 psf	+53.0 psf/-75.0 psf
Forced Entry Resistance	Grade 10	N/A	N/A

Reference should be made to ATI Report No. 53194.01-122-47 for complete test specimen description and data.

130 Derry Court
York, PA 17402-9405
phone: 717-764-7700
fax: 717-764-4129

Architectural Testing

ANSI/AAMA/NWWDA 101/I.S.2-97 TEST REPORT

Rendered to:

MI WINDOWS AND DOORS, INC.
P.O. Box 370
Gratz, Pennsylvania 17030-0370

Report No.:	53194.01-122-47
Test Dates:	08/30/04
Through:	09/02/04
Report Date:	09/14/04
Expiration Date:	09/02/08

Project Summary: Architectural Testing, Inc. (ATI) was contracted by MI Windows and Doors, Inc. to witness testing on three Series/Model 680, aluminum horizontal sliding windows at MI Windows and Doors, Inc. test facility in Elizabethville, Pennsylvania. The samples tested successfully met the performance requirements for the following ratings: Test Specimen #1: HS-R30 126 x 59; Test Specimen #2: HS-R40 71 x 59; Test Specimen #3: HS-R35* 52 x 59. Test specimen description and results are reported herein.

***General Note**: An asterisk (*) next to the performance grade indicates that the size tested for optional performance was smaller than the Gateway test size for the product type and class.*

Test Specification: The test specimens were evaluated in accordance with ANSI/AAMA/NWWDA 101/I.S.2-97, *Voluntary Specifications for Aluminum, Vinyl (PVC) and Wood Windows and Glass Doors.*

Test Specimen Description:

Series/Model: 680

Product Type: Aluminum Horizontal Sliding Window (Fin Frame)

Test Specimen #1: HS-R30 126 x 59 (XOX)

Overall Size: 10' 5-5/8" wide by 4' 11-1/16" high

Interior Sash Size (2): 2' 7" wide by 4' 8-3/8" high

Daylight Opening Size: 4' 11-3/4" wide by 4' 5-5/8" high

Screen Size: 2' 5-3/4" wide by 4' 7-1/8" high

130 Derry Court
York, PA 17402-9405
phone: 717-764-7700
fax: 717-764-4129

Test Specimen Description: (Continued)

Test Specimen #2: HS-R40 71 x 59 (XO)

Overall Size: 5' 11-3/8" wide by 4' 11" high

Interior Sash Size: 2' 11-1/2" wide by 4' 8-1/4" high

Daylight Opening Size: 2' 10-1/4" wide by 4' 5-3/4" high

Screen Size: 2' 10-1/2" wide by 4' 7-1/8" high

Test Specimen #3: HS-R35* 52 x 59 (XO)

Overall Size: 4' 4-1/8" wide by 4' 11" high

Interior Sash Size: 2' 1-7/8" wide by 4' 8-1/4" high

Daylight Opening Size: 1' 10-1/2" wide by 4' 5-3/4" high

Screen Size: 2' 0-1/2" wide by 4' 7-1/8" high

The following descriptions apply to all specimens.

Finish: All aluminum was anodized.

Glazing Details: The sash utilized a single sheet of 1/8" thick, clear annealed glass. The sash were interior glazed onto double-sided adhesive foam tape and secured with PVC snap-in glazing beads.

Weatherstripping:

Description	Quantity	Location
0.230" high by 0.187" backed polypile with center fin	1 Row	Fixed meeting stile, rails
0.230" high by 0.187" backed polypile with center fin	2 Rows	Stiles

Frame Construction: The frame was constructed of extruded aluminum. The corners were coped, butted, sealed, and secured with two #6 by 1" screws through the jambs into the head and sill screw boss. The fixed meeting stile was secured utilizing end caps. The end caps were secured to the fixed meeting stile with two #6 by 3/4" self-tapping screws through the end caps into the fixed meeting stiles screw boss. The end caps were secured with two #6 by 3/4" self-tapping screws into the head and sill. The head and sill also utilized a snap-in PVC insert.

Test Specimen Description: (Continued)

Sash Construction: The sash was constructed of extruded aluminum. The corners were coped, butted, and secured with one #6 by 1" screw through the rail into the stiles screw boss. The jamb stile was thermally broken.

Screen Construction: The screen was constructed of roll-formed aluminum with keyed corners. The screening consisted of a fiberglass mesh and was secured with a flexible vinyl spline.

Hardware:

Description	Quantity	Location
Metal cam locks	2 per sash	10" from rails on locking stile
Roller assembly	2 per sash	1-1/2" from bottom rail ends
Screen plungers	4 per screen	2-1/2" from each rail on stiles

Drainage:

Description	Quantity	Location
1/4" wide by 1-1/4" long weephole with cover	2	3-1/2" from jambs on sill face

Reinforcement: No reinforcement was utilized.

Installation: The windows were installed into a #2 Spruce-Pine-Fir wood buck. The nail fin was back bedded in silicone and secured with #8 by 1-5/8" drywall screws located 2" from corners and 9" on center. The exterior perimeter was sealed with silicone.

Test Results: The results are tabulated as follows:

Paragraph	Title of Test - Test Method	Results	Allowed
Test Specimen #1: HS-R30 126 x 59 (XOX)			
2.2.2.5.1	Operating Force	14 lbf	20 lbf max.
2.1.2	Air Infiltration per ASTM E 283 1.57 psf (25 mph)	0.12 cfm/ft^2	0.30 cfm/ft^2 max.

Note #1: *The tested specimen meets the performance levels specified in ANSI/AAMA/NWWDA 101/I.S.2-97 for air infiltration.*

Test Results: (Continued)

Paragraph	Title of Test - Test Method	Results	Allowed
Test Specimen #1: HS-R30 126 x 59 (XOX) (Continued)			
2.1.3	Water Resistance per ASTM E 547 (with and without screen) 2.86 psf	No leakage	No leakage
2.1.4.1	Uniform Load Deflection per ASTM E 330 (Deflections reported were taken on the meeting stile) (Loads were held for 52 seconds)		
	15.0 psf (positive)	0.37"	See Note #2
	15.0 psf (negative)	0.39"	See Note #2

***Note #2**: The Uniform Load Deflection test is not a requirement of ANSI/AAMA/NWWDA 101/I.S.2-97 for this product designation. The deflection data is recorded in this report for special code compliance and information only.*

2.1.4.2	Uniform Load Structural per ASTM E 330 (Permanent sets reported were taken on the meeting stile) (Loads were held for 10 seconds)		
	22.5 psf (positive)	0.03"	0.21" max.
	22.5 psf (negative)	0.01"	0.21" max.
2.2.2.5.2	Deglazing Test per ASTM E 987 In operating direction - 70 lbs		
	Right sash, lock stile	0.13"/25%	0.50"/100%
	Right sash, jamb stile	0.13"/25%	0.50"/100%
	Left sash, lock stile	0.13"/25%	0.50"/100%
	Left sash, jamb stile	0.13"/25%	0.50"/100%
	In remaining direction - 50 lbs		
	Right sash, top rail	0.06"/13%	0.50"/100%
	Right sash, bottom rail	0.06"/13%	0.50"/100%
	Left sash, top rail	0.06"/13%	0.50"/100%
	Left sash, bottom rail	0.06"/13%	0.50"/100%

Test Results: (Continued)

Paragraph	Title of Test - Test Method	Results	Allowed
Test Specimen #1: HS-R30 126 x 59 (XOX) (Continued)			
2.1.8	Forced Entry Resistance per ASTM F 588		
	Type: A	Grade: 10	
	Lock Manipulation Test	No entry	No entry
	Test A1 through A5	No entry	No entry
	Test A7	No entry	No entry
	Lock Manipulation Test	No entry	No entry
Optional Performance			
4.3	Water Resistance per ASTM E 547 (with and without screen) 6.0 psf	No leakage	No leakage
4.4.1	Uniform Load Deflection per ASTM E 330 (Deflections reported were taken on the meeting stile) (Loads were held for 52 seconds)		
	30.0 psf (positive)	0.77"	See Note #2
	30.0 psf (negative)	0.58"	See Note #2
4.4.2	Uniform Load Structural per ASTM E 330 (Permanent sets reported were taken on the meeting stile) (Loads were held for 10 seconds)		
	45.0 psf (positive)	0.08"	0.21" max.
	45.0 psf (negative)	0.10"	0.21" max.

Test Results: (Continued)

Paragraph	Title of Test - Test Method	Results	Allowed
Test Specimen #2: HS-R40 71 x 59 (XO)			
Optional Performance			
4.4.1	Uniform Load Deflection per ASTM E 330		
	(Deflections reported were taken on the meeting stile)		
	(Loads were held for 52 seconds)		
	40.0 psf (positive)	0.86"	See Note #2
	40.7 psf (negative)	0.72"	See Note #2
4.4.2	Uniform Load Structural per ASTM E 330		
	(Permanent sets reported were taken on the meeting stile)		
	(Loads were held for 10 seconds)		
	60.0 psf (positive)	0.05"	0.22" max.
	61.1 psf (negative)	0.10"	0.22" max.
Test Specimen #3: HS-R35* 52 x 59			
Optional Performance			
4.4.1	Uniform Load Deflection per ASTM E 330		
	(Deflections reported were taken on the meeting stile)		
	(Loads were held for 52 seconds)		
	35.3 psf (positive)	0.48"	See Note #2
	50.0 psf (negative)	0.71"	See Note #2
4.4.2	Uniform Load Structural per ASTM E 330		
	(Permanent sets reported were taken on the meeting stile)		
	(Loads were held for 10 seconds)		
	53.0 psf (positive)	0.10"	0.22" max.
	75.0 psf (negative)	0.07"	0.22" max.

Detailed drawings, representative samples of the test specimen, and a copy of this report will be retained by ATI for a period of four years from the original test date. The above results were secured by using the designated test methods and they indicate compliance with the performance requirements of the above referenced specification. This report does not constitute certification of this product, which may only be granted by the certification program administrator. This report may not be reproduced, except in full, without approval of Architectural Testing, Inc.

For ARCHITECTURAL TESTING, INC:

Digitally Signed by: Mark A. Hess

Mark A. Hess
Technician

Digitally Signed by: Steven M. Urich

Steven M. Urich, P.E.
Senior Project Engineer

MAH:vlm

MIAMI-DADE

BUILDING CODE COMPLIANCE OFFICE (BCCO)
PRODUCT CONTROL DIVISION

MIAMI-DADE COUNTY, FLORIDA
METRO-DADE FLAGLER BUILDING
140 WEST FLAGLER STREET, SUITE 1603
MIAMI, FLORIDA 33130-1563
(305) 375-2901 FAX (305) 375-2908

NOTICE OF ACCEPTANCE (NOA)

Ceco Door Products
9159 Telecom Drive
Milan, TN 38358

Out Swing

SCOPE:
This NOA is being issued under the applicable rules and regulations governing the use of construction materials. The documentation submitted has been reviewed by Miami-Dade County Product Control Division and accepted by the Board of Rules and Appeals (BORA) to be used in Miami Dade County and other areas where allowed by the Authority Having Jurisdiction (AHJ).

This NOA shall not be valid after the expiration date stated below. The Miami-Dade County Product Control Division (In Miami Dade County) and/or the AHJ (in areas other than Miami Dade County) reserve the right to have this product or material tested for quality assurance purposes. If this product or material fails to perform in the accepted manner, the manufacturer will incur the expense of such testing and the AHJ may immediately revoke, modify, or suspend the use of such product or material within their jurisdiction. BORA reserves the right to revoke this acceptance, if it is determined by Miami-Dade County Product Control Division that this product or material fails to meet the requirements of the applicable building code.

This product is approved as described herein, and has been designed to comply with the High Velocity Hurricane Zone of the Florida Building Code.

DESCRIPTION: Series "Regent" & "Omega" 18 ga. 3^0-7^0 Outswing Commercial Steel Door

APPROVAL DOCUMENT: Drawing No. **RD0087**, titled "3-0 x 7-0 Series", sheets 1 through 7 of 7, dated 5/30/97 with revision C dated 2/24/00,prepared by the manufacturer, bearing the Miami-Dade County Product Control Renewal stamp with the Notice of Acceptance number and expiration date by the Miami-Dade County Product Control Division.

MISSILE IMPACT RATING: Large and Small Missile Impact

LABELING: Each unit shall bear a permanent label with the manufacturer's name or logo, city, state and following statement: "Miami-Dade County Product Control Approved", unless otherwise noted herein.

RENEWAL of this NOA shall be considered after a renewal application has been filed and there has been no change in the applicable building code negatively affecting the performance of this product.

TERMINATION of this NOA will occur after the expiration date or if there has been a revision or change in the materials, use, and/or manufacture of the product or process. Misuse of this NOA as an endorsement of any product, for sales, advertising or any other purposes shall automatically terminate this NOA. Failure to comply with any section of this NOA shall be cause for termination and removal of NOA.

ADVERTISEMENT: The NOA number preceded by the words Miami-Dade County, Florida, and followed by the expiration date may be displayed in advertising literature. If any portion of the NOA is displayed, then it shall be done in its entirety.

INSPECTION: A copy of this entire NOA shall be provided to the user by the manufacturer or its distributors and shall be available for inspection at the job site at the request of the Building Official.
This NOA **renews NOA # 00-0315.03** and consists of this page 1 as well as approval document mentioned above.
The submitted documentation was reviewed by **Manuel Perez, P.E.**

PRODUCT CONTROL ACCEPTED

NOA No 03-0411.01
Expiration Date August 14, 2008
Approval Date: May 15, 2003

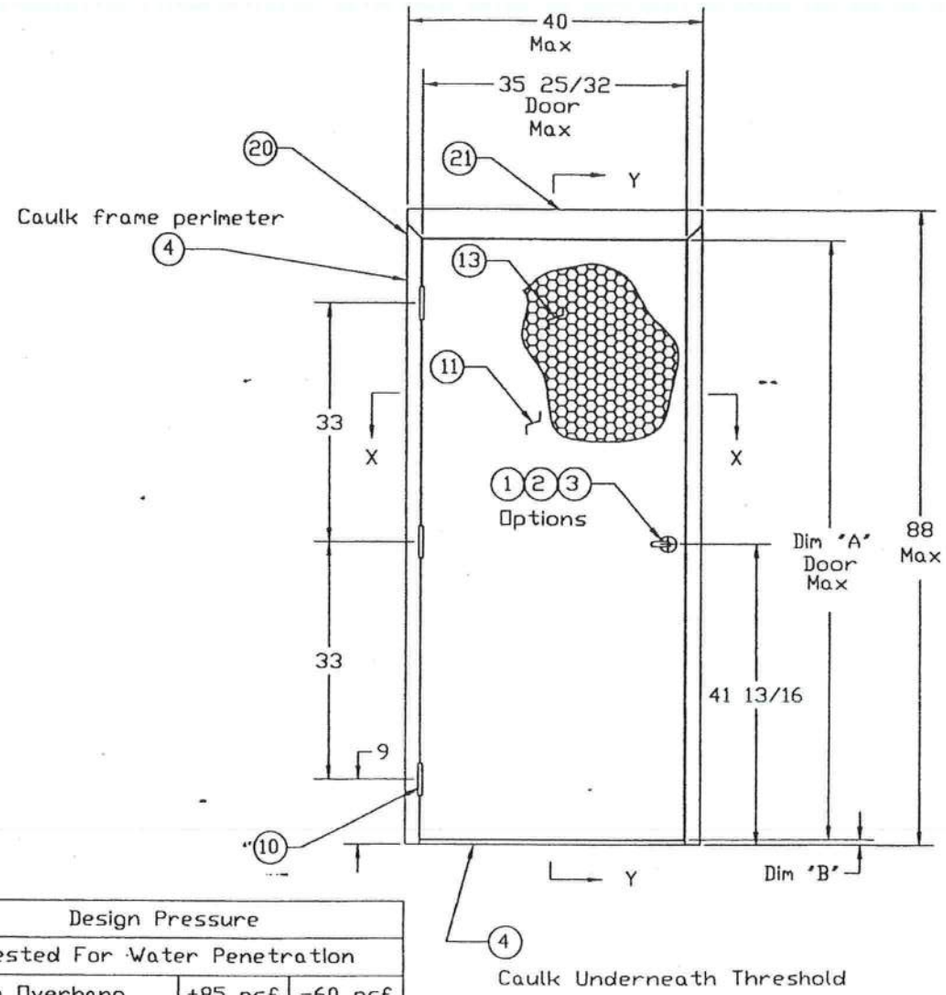

Design Pressure		
Tested For Water Penetration		
With Overhang	+85 psf	-60 psf
Without Overhang	+60 psf	-60 psf

	Dim 'A'	Dim 'B'
3/4" Undercut	83 1/8	3/4
3/8" Undercut	83 1/2	3/8

Sheet 2	Frame Anchor Installation
Sheet 3	Threshold Installation
Sheet 3	Weatherstrip Installation
Sheet 4	Door Latch Reinforcement
Sheet 5-6	Cross Section View
Sheet 7	Bill Of Material

APPROVED AS COMPLYING WITH THE SOUTH FLORIDA BUILDING CODE
DATE June 08, 2000
BY Manuel Perez
PRODUCT CONTROL DIV.S ON BUILDING CODE COMPLIANCE OFFICE
ACCEPTANCE NO. 00-0315.03

PRODUCT RENEWED
as complying with the Florida Building Code
Acceptance No. 03-0411.01
Expiration Date AUG. 14, 2008
By Manuel Perez
Miami-Dade Product Control Division

ISSUE	REVISIONS
C 2/24/00 JAR	Revised Format, Transfered Information from NOA
B 7/22/97 GWS	Deleted (2) Drawings Revised Sheet Numbers

MATERIAL SPECIFICATIONS:

Finish: Rust Inhibitive Primer

3-0 x 7-0 Series Elevation Drawing

CECO DOOR PRODUCTS
Milan, Tennessee 38358

DRAWN BY: GWS
DATE: 5/30/97
DRAWING NUMBER: RD0087
Sheet 1 Of 7

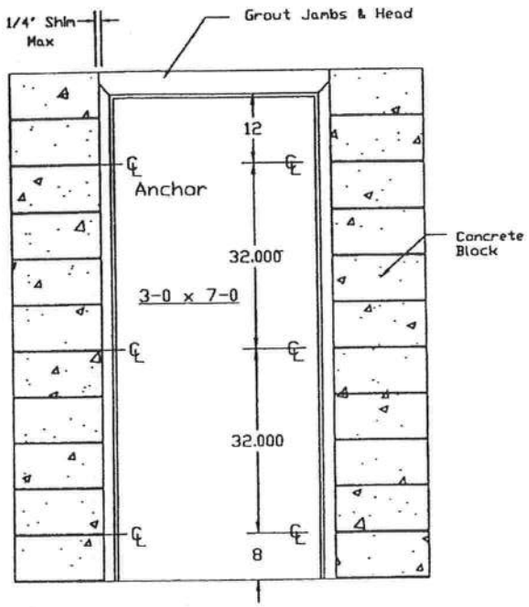

Masonry "T" Anchor

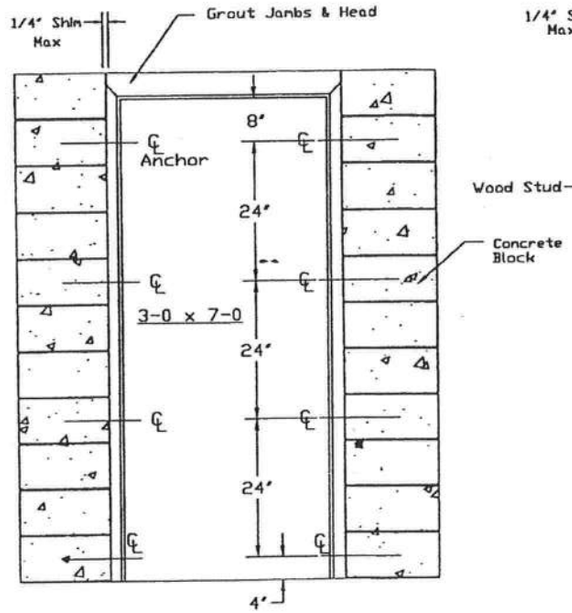

Existing Opening Anchor Into Block

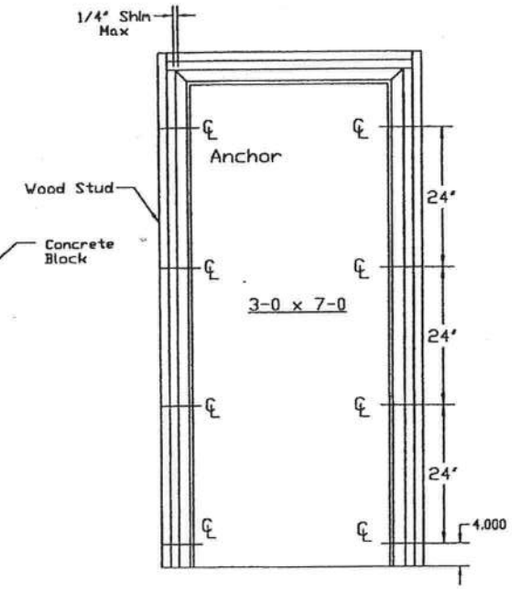

Existing Opening Anchor Into Wood Stud

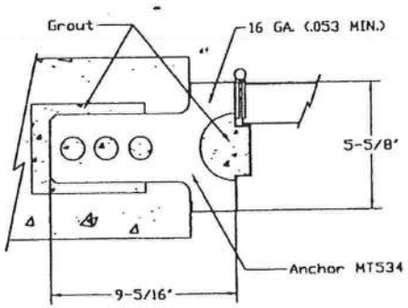

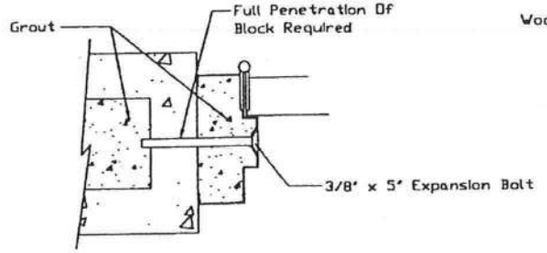

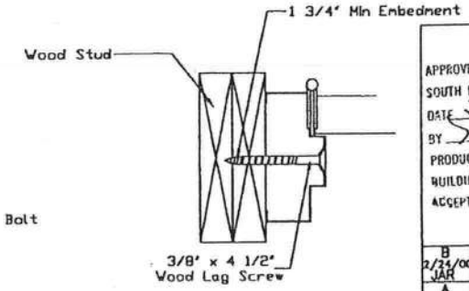

PRODUCT RENEWED
as complying with the Florida Building Code
Acceptance No. 03-0411.01
Expiration Date AUG. 14, 2008
By Manuel Perez
Miami-Dade Product Control Division

APPROVED AS COMPLYING WITH THE SOUTH FLORIDA BUILDING CODE
DATE June 08, 2000
BY Manuel Perez
PRODUCT CONTROL DIVISION
BUILDING CODE COMPLIANCE OFFICE
ACCEPTANCE NO. 00-0315.03

NOTES:
1. SEE SHEET 7 FOR BILL OF MATERIALS

MATERIAL SPECIFICATIONS:

Frame Anchor Installation Details

CECO DOOR PRODUCTS
Milan, Tennessee 38358

ISSUE	REVISIONS
B 2/24/00 JAR	Revised Format, Transfered Information from NOA
A 7/22/97 GWS	Revised Sheet Number

DRAWN BY: GWS
DATE: 5/30/97
DRAWING NUMBER: RD0087
Sheet 2 of 7

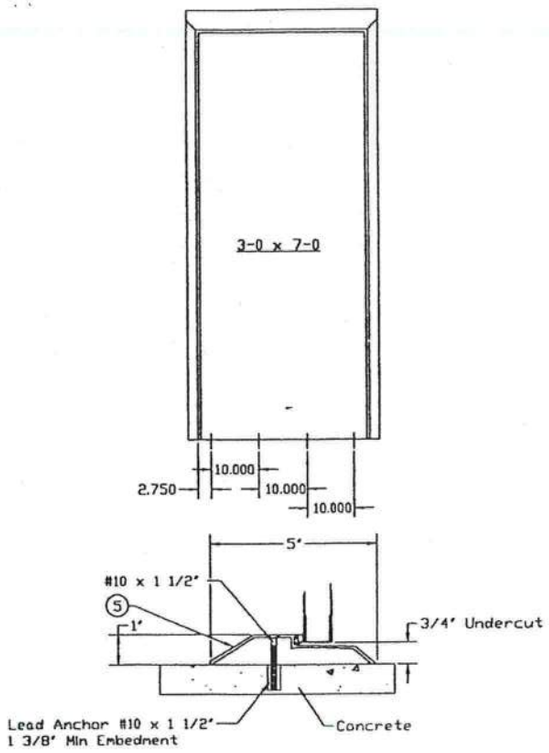

Threshold: National Guard 803S

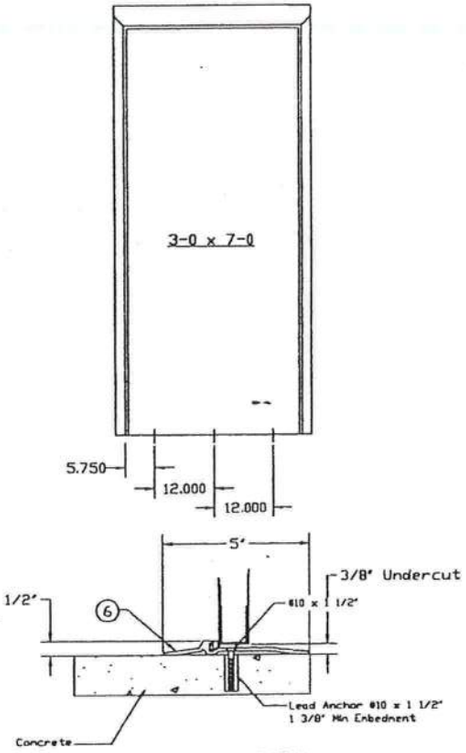

Threshold: Penko 2005AV

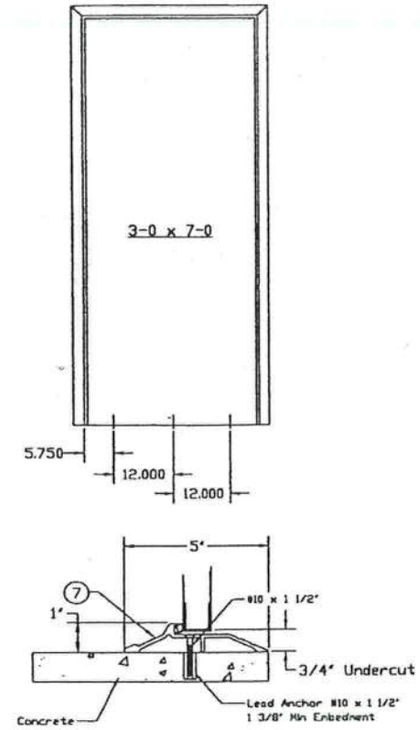

Threshold: Penko 181AV

PRODUCT RENEWED
as complying with the Florida
Building Code
Acceptance No. 03-0411.01
Expiration Date AUG. 14, 2008
by Manuel Perez
Miami-Dade Product Control
Division

NOTE: 1. All thresholds shown are made from extruded aluminum with slide-in vinyl weatherstrip insert.

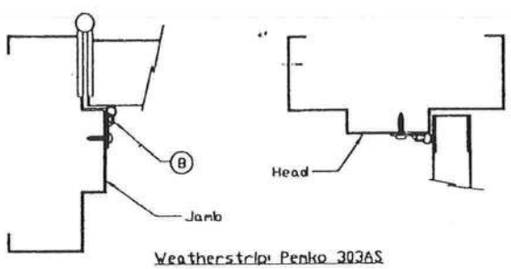

Weatherstrip: Penko 303AS

NOTE:
2. LOCATION: ALONG THE ENTIRE HEAD AND JAMB PERIMETER. ATTACHED WITH THIRTY FOUR (34) #8 X 3/4" PPH SMS SPACED AT 6" O/C.

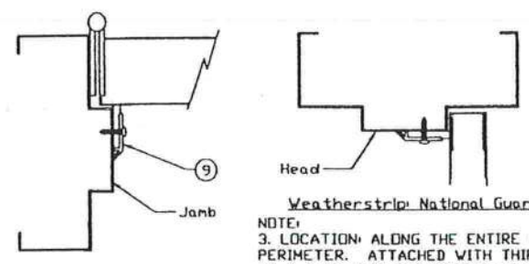

Weatherstrip: National Guard 130NA

NOTE:
3. LOCATION: ALONG THE ENTIRE HEAD AND JAMB PERIMETER. ATTACHED WITH THIRTY FOUR (34) #8 X 3/4" PPH SMS SPACED AT 6" O/C.

NOTE: 4. See Sheet 7 For Bill of Material

APPROVED AS COMPLYING WITH THE
SOUTH FLORIDA BUILDING CODE
DATE June 08/2000
BY Manuel Perez
PRODUCT CONTROL DIVISION
BUILDING CODE COMPLIANCE OFFICE
ACCEPTANCE NO. 00-0315.03

ISSUE	REVISIONS
C 2/24/00 JAR	Revised Format, Transfered Information from NOA
B 7/22/97 GWS	Revised Sheet Number

DRAWN BY: GWS DATE: 5/30/97

MATERIAL SPECIFICATIONS:

Threshold & Weatherstrip Installation details

CECO DOOR PRODUCTS
Milan, Tennessee 38358

RD0087
Sheet 3 Of 7

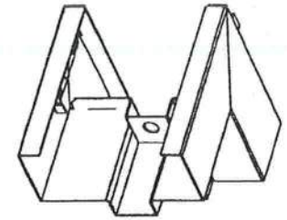

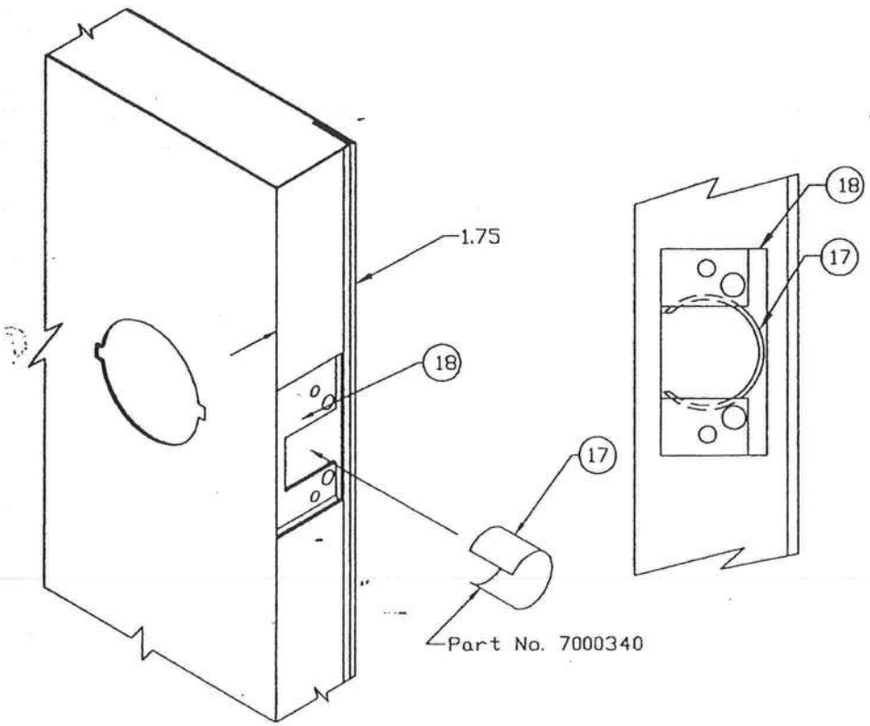

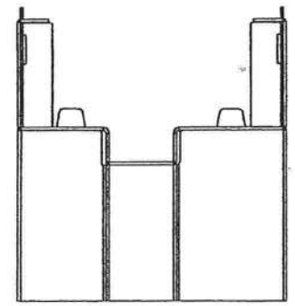

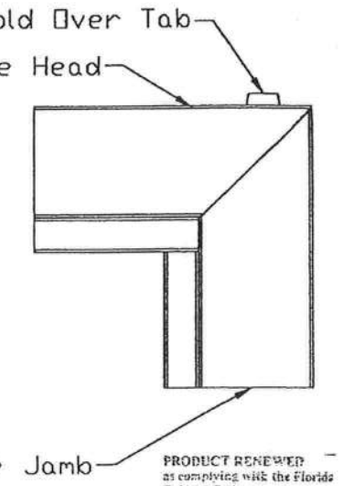

PRODUCT RENEWED
as complying with the Florida
Building Code
Acceptance No. 03-0411.01
Expiration Date AUG. 14 2008
By Manuel Perez
Miami-Dade Product Control
Division

APPROVED AS COMPLYING WITH THE
SOUTH FLORIDA BUILDING CODE
DATE June 08 2000
BY Manuel Perez
PRODUCT CONTROL DIVISION
BUILDING CODE COMPLIANCE OFFICE
ACCEPTANCE NO. 00-0315-03

Note: 1. For Cylindrical Lock Only
2. See Sheet 7 For Bill Of Material

B 2/24/00 JAR	Revised Format, Transfered Information from NOA
A 7/22/97 GWS	Revised Sheet Number
ISSUE	REVISIONS

MATERIAL SPECIFICATIONS:

Cylindrical Lock Reinforcement and "SF" Seriers Frame Corner Installation Details

CECO DOOR PRODUCTS
Milan, Tennessee 38358

DRAWN BY: GWS
DATE: 6/06/97
DRAWING NUMBER: RD0087
Sheet 4 of 7

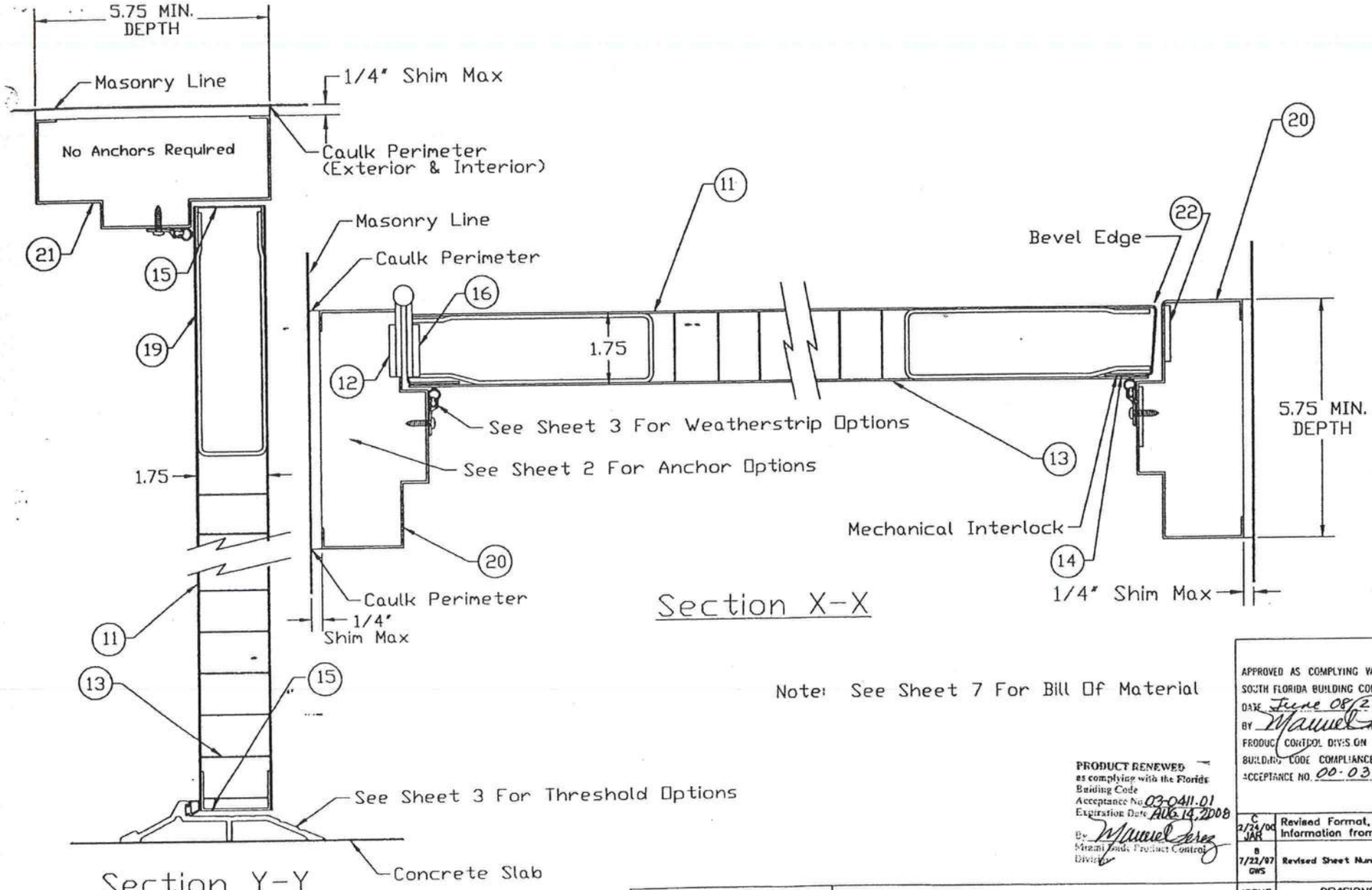

Note: See Sheet 7 For Bill Of Material

PRODUCT RENEWED as complying with the Florida Building Code Acceptance No. 03-0411.01 Expiration Date Aug. 14, 2008 By Manuel Perez Miami-Dade Product Control Division

APPROVED AS COMPLYING WITH THE SOUTH FLORIDA BUILDING CODE DATE June 08, 2000 BY Manuel Perez PRODUCT CONTROL DIVISION BUILDING CODE COMPLIANCE OFFICE ACCEPTANCE NO. 00-0315.03

ISSUE	REVISIONS
C 2/24/00 JAR	Revised Format, Transfered Information from NOA
B 7/22/97 GWS	Revised Sheet Number

MATERIAL SPECIFICATIONS:

Cross Section View
Regent Door

CECO DOOR PRODUCTS
Milan, Tennessee 38358

DRAWN BY: GWS
DATE: 5/30/97
DRAWING NUMBER: RD0087
Sheet 5 of 7

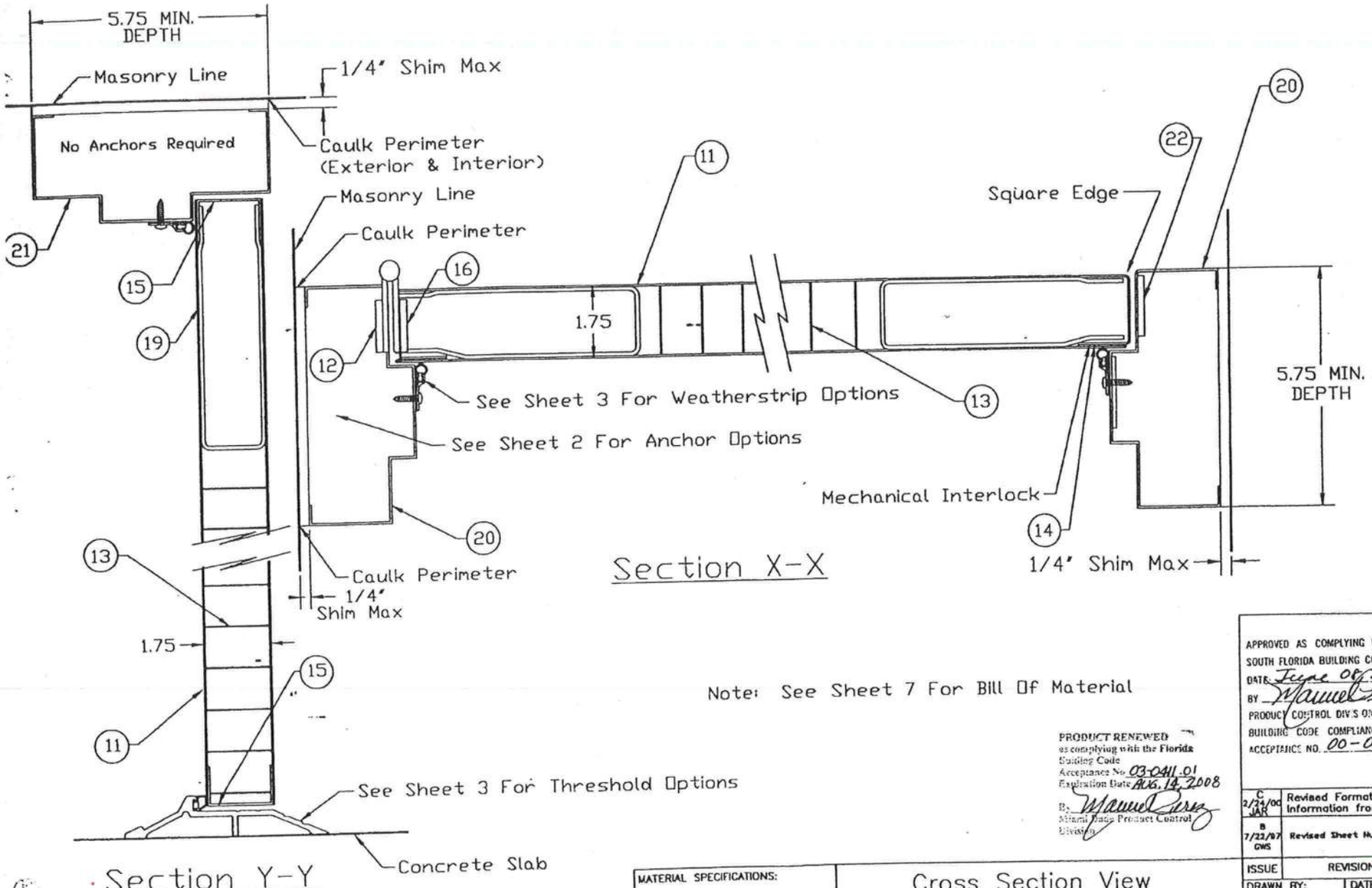

Note: See Sheet 7 For Bill Of Material

PRODUCT RENEWED as complying with the Florida Building Code Acceptance No. 03-0411.01 Expiration Date AUG. 14, 2008 By: Miami Dade Product Control Division

APPROVED AS COMPLYING WITH THE SOUTH FLORIDA BUILDING CODE DATE June 06, 2000 BY Manuel Serra PRODUCT CONTROL DIVISION BUILDING CODE COMPLIANCE OFFICE ACCEPTANCE NO. 00-0315.03

ISSUE	REVISIONS
C 2/24/00 JAR	Revised Format, Transfered Information from NOA
B 7/22/97 GWS	Revised Sheet Number

MATERIAL SPECIFICATIONS:

Cross Section View
Omega Door

CECO DOOR PRODUCTS
Milan, Tennessee 38358

DRAWN BY: GWS
DATE: 5/30/97
DRAWING NUMBER: RD0087
Sheet 6 of 7

ITEM	QTY	DESCRIPTION	MATERIAL	SIZE
1	1	SCHLAGE SERIES AL53PD GRADE 2, LATCH LOCK, SINGLE LEVER OR KNOB OPERATED		
2	1	MARKS SERIES 170AB GRADE 2, LATCH LOCK, INSIDE/OUTSIDE LEVER OPERATED		
3	1	YALE SERIES AU53070 GRADE 2 LATCH LOCK, SINGLE LEVER OR KNOB OPERATED.		
4	1	CAULK FOR INSTALLATION AND WEATHERSTRIP ADAPTER SCREWS FRAME PERIMETER (INSIDE & OUT) AND FRAME SILL CORNERS	GE SILICONE HOUSEHOLD SEALANT	
5	1	NATIONAL GUARD #803S		
6	1	PEMKO #2005AV		
7	1	PEMKO #181AV		
8	1 ROW	PEMKO #303AS HIGH SURFACE APPLIED EXTRUDED ALUMINUM WEATHERSTRIP ADAPTER WITH A SILICON (TM) BULB INSERT		
9	1 ROW	NATIONAL GUARD #130NA 1-1/4" WIDE X 0.188" SURFACE APPLIED EXTRUDED ALUMINUM WEATHERSTRIP ADAPT. WITH A FOAM INSERT		
10	3	HAGAR BB1279, 4-1/2" X 4-1/2" X .0134" THICK STEEL HINGE EACH ATTACHED WITH EIGHT #12-24 X 1/2" FH MS		
11	1	FACE SHEET CONFORMING TO ASTM A366 AND ASTM-A568	COMMERCIAL QUALITY COLD ROLLED STEEL (MINIMUM YEILD STR. OF Fy=36,000 psi)	18 GAUGE (.042" MIN. THICK)
12	3	HINGE REINFORCING PLATE, PLATE SPOT WELDED TO FRAME JAMB AT EACH HINGE LOCATION	STEEL	1-1/4" X 9" X 7 GA.
13	1	CORE: FULL HONEYCOMB CORE PERMANENTLY BONDED TO THE INSIDE OF EACH FACE SKIN WITH NON-FLAMMABLE ADHESIVE	PHENOLIC RESIN-IMPREGNATED KRAFT PAPER	1-1/8" CELL
14	1	DENFLEX 3500 STRUCTURAL ADHESIVE EPOXY		
15	1	ROLL FORMED STEEL CHANNEL ON THE TOP AND BOTTOM OF THE DOOR SPOT WELDED TO EXTERIOR AND GLUED TO INTERIOR SKIN		1" X 1-3/4" X 1" X 16 GA. (.053" MIN)
				1-1/4" X 9" X 7 GA.
16	3	DOOR HINGE REINFORCEMENT		.015" THICK X 1.313 INSIDE DIAMETER
17	1	DOOR LATCH REINFORCEMENT, STEEL "C" RING	28 GA. GALV.	16 GA.
18	1	DOOR LOCK REINFORCEMENT	STEEL	12 GA. (.093")
19	1	DOOR CLOSER REINFORCEMENT, ROLLED FORM CHANNELS TACK WELDED TO DOOR END CHANNELS	STEEL	2" FACE, 5-3/4" DEPTH MIN.
20	2	SERIES "SF", FRAME JAMB, DOUBLE RABBET PROFILE FACE SHEET CONFORMING TO ASTM A366 AND ASTM-A653	16 GA. (.053" MIN.) STEEL COMMERCIAL QUALITY COLD ROLLED STEEL (MINIMUM YEILD STR. OF Fy=40,000 psi)	2" FACE, 5-3/4" DEPTH MIN.
21	1	SERIES "SF", FRAME HEAD, DOUBLE RABBET PROFILE FACE SHEET CONFORMING TO ASTM A366 AND ASTM-A653	16 GA. (.053" MIN.) STEEL COMMERCIAL QUALITY COLD ROLLED STEEL (MINIMUM YEILD STR. OF Fy=40,000 psi)	1-1/8" X 2-1/2" X 12 GA.
22	1	JAMB LOCK STRIKE REINFORCING PLATE	STEEL	

PRODUCT RENEWED as complying with the Florida Building Code
Acceptance No. 03-0411.01
Expiration Date AUG 14, 2008
By Manuel Perez
Miami-Dade Product Control Division

APPROVED AS COMPLYING WITH THE SOUTH FLORIDA BUILDING CODE
DATE June 08, 2000
BY Manuel Perez
PRODUCT CONTROL DIVISION
BUILDING CODE COMPLIANCE OFFICE
ACCEPTANCE NO. 00-0315.03

ISSUE	REVISIONS
B 2/24/00 JAR	Revised Format, Transfered Information from NOA
A 7/22/97 GWS	Revised Sheet Number

MATERIAL SPECIFICATIONS:

3-0 x 7-0 Series
Bill Of Materials

CECO DOOR PRODUCTS
Milan, Tennessee 38358

DRAWN BY: GWS
DATE: 6/02/97
DRAWING NUMBER: RD0087
Sheet 7 of 7

MIAMI-DADE

BUILDING CODE COMPLIANCE OFFICE (BCCO)
PRODUCT CONTROL DIVISION

MIAMI-DADE COUNTY, FLORIDA
METRO-DADE FLAGLER BUILDING
140 WEST FLAGLER STREET, SUITE 1603
MIAMI, FLORIDA 33130-1563
(305) 375-2901 FAX (305) 375-2908

NOTICE OF ACCEPTANCE (NOA)

Ceco Door Products
9159 Telecom Drive
Milan, TN 38358

In Swing

SCOPE:

This NOA is being issued under the applicable rules and regulations governing the use of construction materials. The documentation submitted has been reviewed by Miami-Dade County Product Control Division and accepted by the Board of Rules and Appeals (BORA) to be used in Miami Dade County and other areas where allowed by the Authority Having Jurisdiction (AHJ).

This NOA shall not be valid after the expiration date stated below. The Miami-Dade County Product Control Division (In Miami Dade County) and/or the AHJ (in areas other than Miami Dade County) reserve the right to have this product or material tested for quality assurance purposes. If this product or material fails to perform in the accepted manner, the manufacturer will incur the expense of such testing and the AHJ may immediately revoke, modify, or suspend the use of such product or material within their jurisdiction. BORA reserves the right to revoke this acceptance, if it is determined by Miami-Dade County Product Control Division that this product or material fails to meet the requirements of the applicable building code.

This product is approved as described herein, and has been designed to comply with the High Velocity Hurricane Zone of the Florida Building Code.

DESCRIPTION: **The Ceco Series Single Flush / Embossed Inswing Commercial Steel Doors –Impact**

APPROVAL DOCUMENT: Drawing No RD0728, titled "3-0 x 7-0 , Series Regent, Omega, Imperial, Versa door", prepared by manufacturer, sheets 1 through 9 of 9 dated 05/22/02 and latest revised on 10-10-02, bearing the Miami-Dade County Product Control Approval stamp with the Notice of Acceptance number and approval date by the Miami-Dade County Product Control Division.

MISSILE IMPACT RATING: **Large and Small Missile Impact**

LABELING: Each unit shall bear a permanent label with the manufacturer's name or logo, city, state and following statement: "Miami-Dade County Product Control Approved", unless otherwise noted herein.

RENEWAL of this NOA shall be considered after a renewal application has been filed and there has been no change in the applicable building code negatively affecting the performance of this product.

TERMINATION of this NOA will occur after the expiration date or if there has been a revision or change in the materials, use, and/or manufacture of the product or process. Misuse of this NOA as an endorsement of any product, for sales, advertising or any other purposes shall automatically terminate this NOA. Failure to comply with any section of this NOA shall be cause for termination and removal of NOA.

ADVERTISEMENT: The NOA number preceded by the words Miami-Dade County, Florida, and followed by the expiration date may be displayed in advertising literature. If any portion of the NOA is displayed, then it shall be done in its entirety.

INSPECTION: A copy of this entire NOA shall be provided to the user by the manufacturer or its distributors and shall be available for inspection at the job site at the request of the Building Official.

This NOA consists of this page 1 as well as approval document mentioned above.

The submitted documentation was reviewed by **Ishaq I. Chanda, P.E.**

PRODUCT CONTROL ACCEPTED

NOA No 02-0807.04
Expiration Date: October 31, 2007
Approval Date: October 31, 2002
Page 1

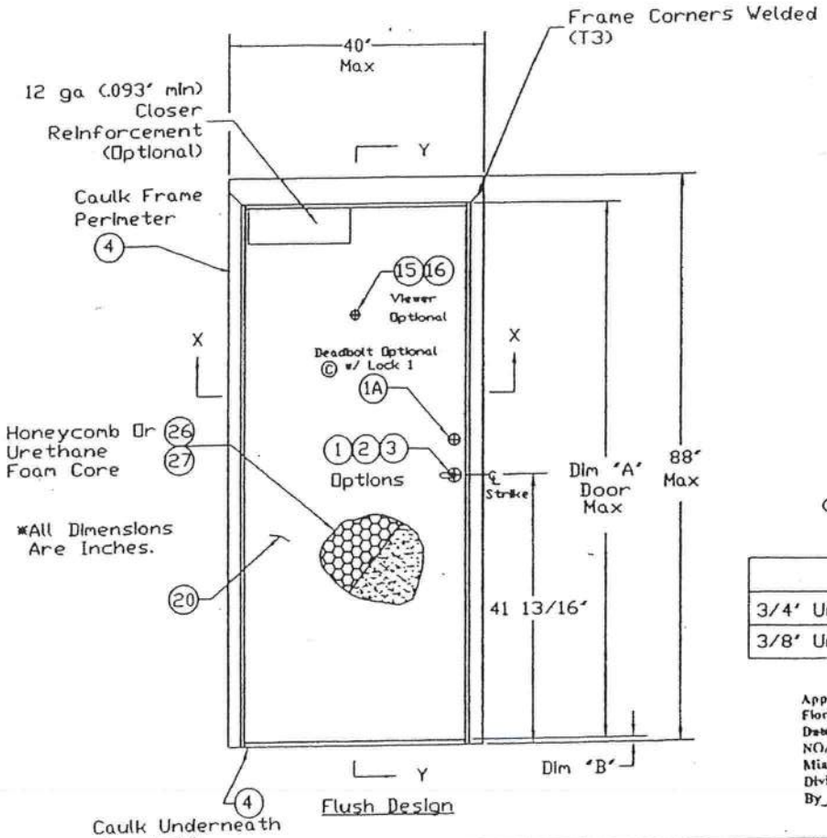

Flush Design

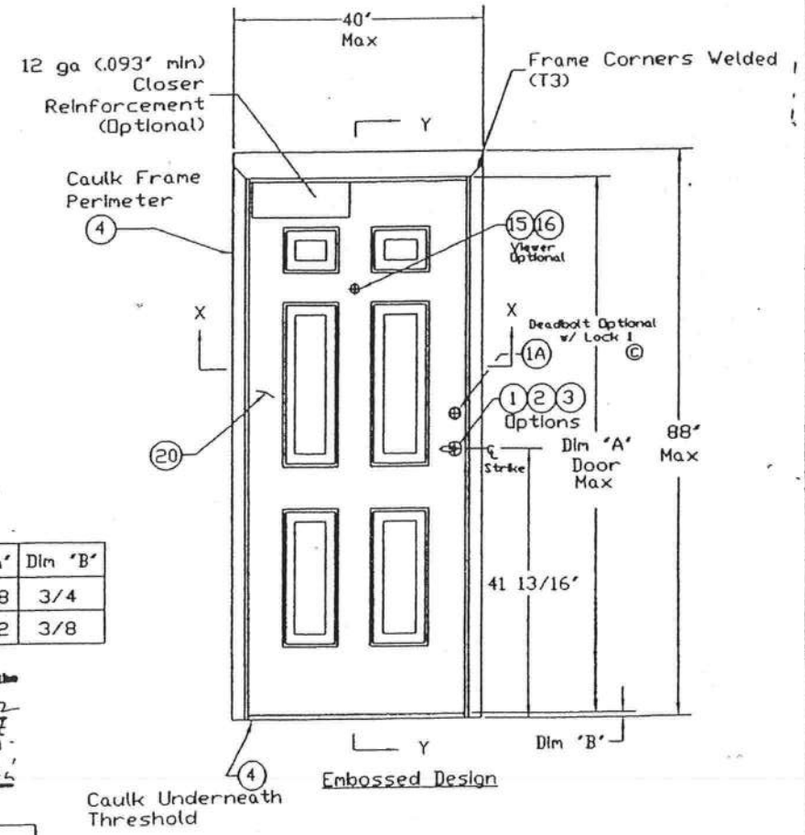

Embossed Design

In-Swing Door
(Exterior View)

	Dim 'A'	Dim 'B'
3/4' Undercut	83 1/8	3/4
3/8' Undercut	83 1/2	3/8

Approved as complying with the Florida Building Code
Date OCTOBER 31, 2002
NOA# 02-0807.04
Miami Dade Product Control Division
By Ishaq I. Chanda

Design Pressure Rating		
	Where Water Infiltration Requirement Is Needed	Where Water Infiltration Requirement Is Not Needed
Positive	Not Approved	+70 PSF
Negative	Not Approved	-70 PSF

Notes:
1) In-swing Not Approved For Water Infiltration
2) This Door Does Not Need A Hurricane Protection System
3) Hinge Spacing Is 33' O.C., 13' From Top Of Frame & 9' From The Botton.

Sheet 2	Frame Anchor Installation
Sheet 3	Threshold Installation
Sheet 3	Weatherstrip Installation
Sheet 4	Door Latch Reinforcement
Sheet 5-8	Cross Section View
Sheet 9	Bill Of Material

MATERIAL SPECIFICATIONS:
Finish: Rust Inhibitive Primer

3-0 x 7-0 Series
Regent, Omega, Imperial, & Versadoor
In-Swing Elevation Drawing

CECO DOOR PRODUCTS
Milan, Tennessee 38358

ISSUE	REVISIONS
B 10/10/02 LT	Revised Per Marked-Up Drawings From Ishaq Chanda.
A 8/28/02 LT	Revised Per Marked-Up Drawings From Ishaq Chanda.

DRAWN BY: LT
DATE: 5/22/02
DRAWING NUMBER: RD0728
Sheet 1 of 9

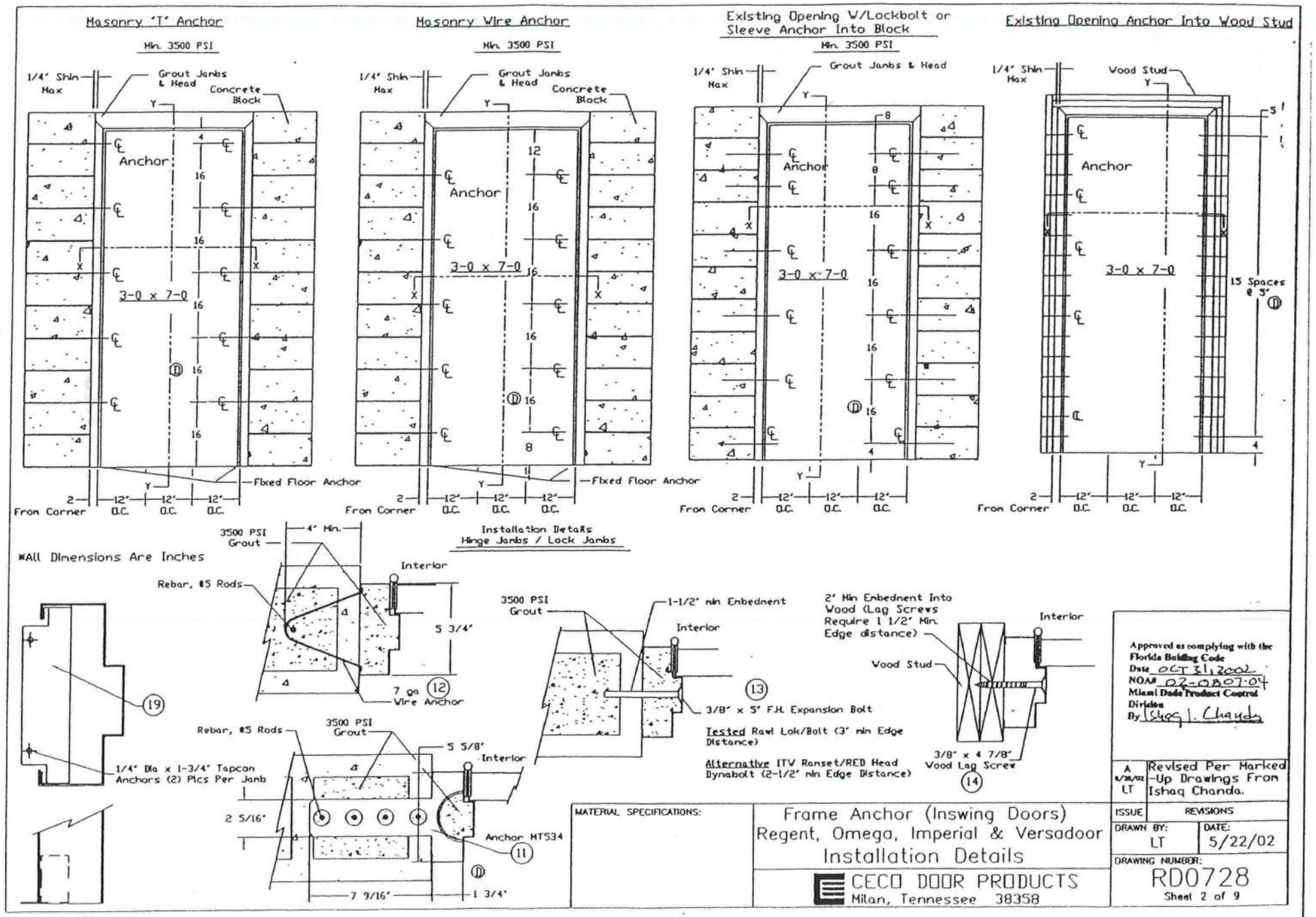
Masonry 'T' Anchor
Min. 3500 PSI
Masonry Wire Anchor
Min. 3500 PSI
Existing Opening W/Lockbolt or Sleeve Anchor Into Block
Min. 3500 PSI
Existing Opening Anchor Into Wood Stud
1/4" Shim Max
Grout Jambs & Head
Concrete Block
Anchor
3-0 x 7-0
Fixed Floor Anchor
Wood Stud
15 Spaces @ 3"
From Corner
O.C.
*All Dimensions Are Inches
Installation Details
Hinge Jambs / Lock Jambs
3500 PSI Grout
4" Min.
Interior
Rebar, #5 Rods
5 3/4"
7 ga Wire Anchor
1-1/2" min Embedment
3/8" x 5" F.H. Expansion Bolt
Tested Rawl Lok/Bolt (3" min Edge Distance)
Alternative ITW Ranset/RED Head Dynabolt (2-1/2" min Edge Distance)
2" Min Embedment Into Wood (Lag Screws Require 1 1/2" Min. Edge distance)
3/8" x 4 7/8" Wood Lag Screw
1/4" Dia x 1-3/4" Tapcon Anchors (2) Pics Per Jamb
5 5/8"
2 5/16"
Anchor HT534
7 9/16"
1 3/4"
Approved as complying with the Florida Building Code
Date OCT 31, 2002
NOA# 02-0807.04
Miami Dade Product Control Division
By Ishaq I. Chanda
A 6/28/02 LT
Revised Per Marked-Up Drawings From Ishaq Chanda.
ISSUE
REVISIONS
DRAWN BY: LT
DATE: 5/22/02
DRAWING NUMBER: RD0728
Sheet 2 of 9
MATERIAL SPECIFICATIONS:
Frame Anchor (Inswing Doors)
Regent, Omega, Imperial & Versadoor
Installation Details
CECO DOOR PRODUCTS
Milan, Tennessee 38358

*Note: Structural Member At Header Must Be Designed To carry 58.3#/ft. load Imposed And Must Be Reviewed By Building Official.

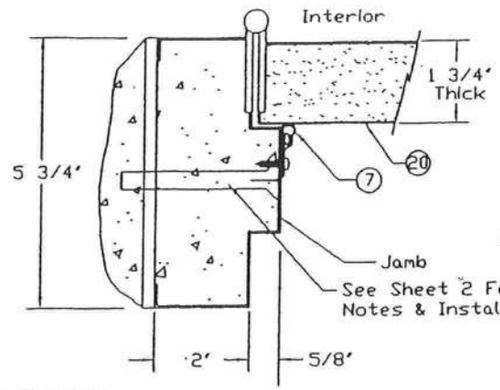

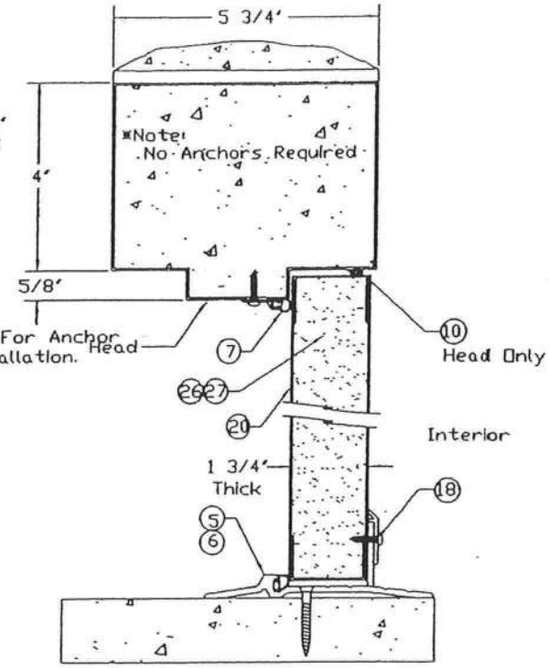

Section Y-Y

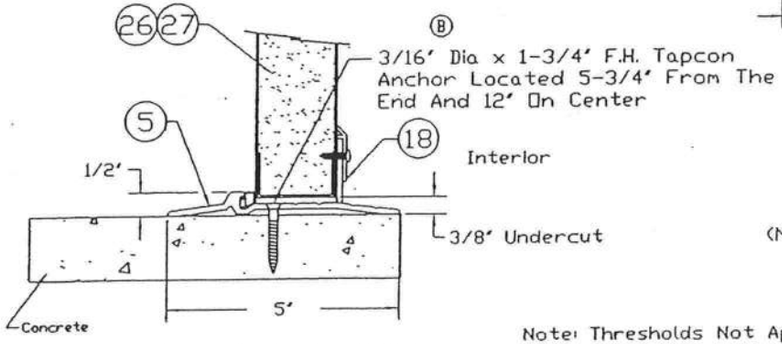

Threshold: Penko 2005AV

Inswing
(Not Approved For Water)

Note: Thresholds Not Approved For Water.

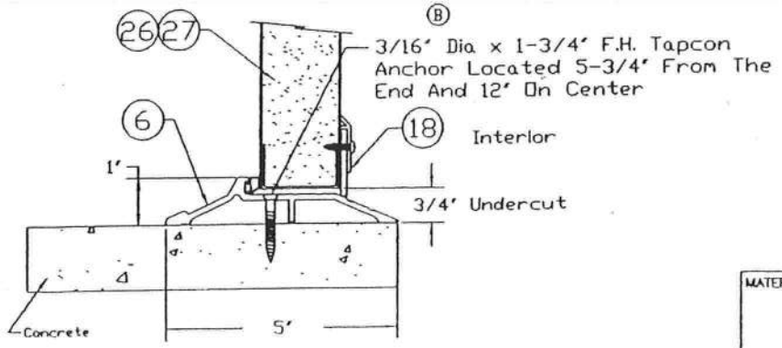

Threshold: Penko 181AV

Approved as complying with the Florida Building Code
Date OCT 31, 2002
NOA# 02-0807.04
Miami Dade Product Control Division
By Ishaq I. Chanda

D 10/10/02 LT	Revised Per Marked-Up Drawings From Ishaq Chanda
C 8/29/02 LT	Revised Per Marked-Up Drawings From Ishaq Chanda
ISSUE	REVISIONS

DRAWN BY: LT	DATE: 5/22/02

MATERIAL SPECIFICATIONS:

Threshold & Weatherstrip (Inswing Doors)
Regent, Omega, Imperial, Versadoor
Installation Details

CECO DOOR PRODUCTS
Milan, Tennessee 38358

RD0728
Sheet 3 Of 9

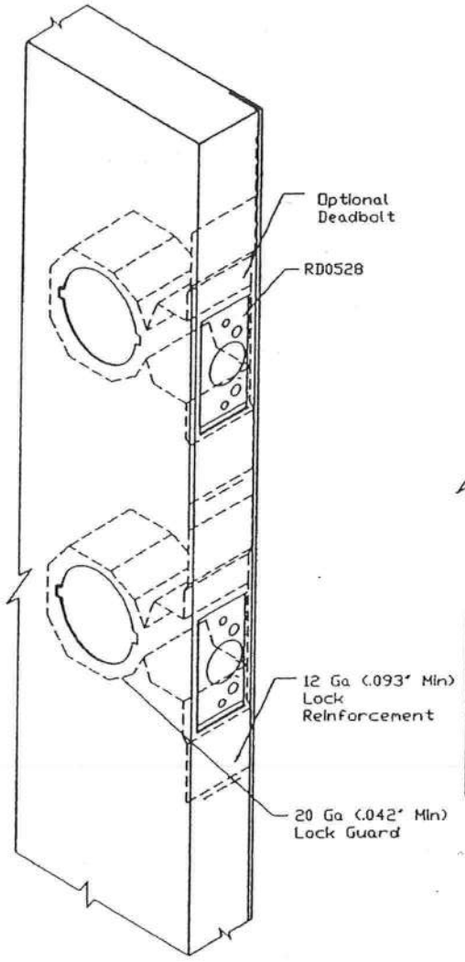

Schlage AL53PD

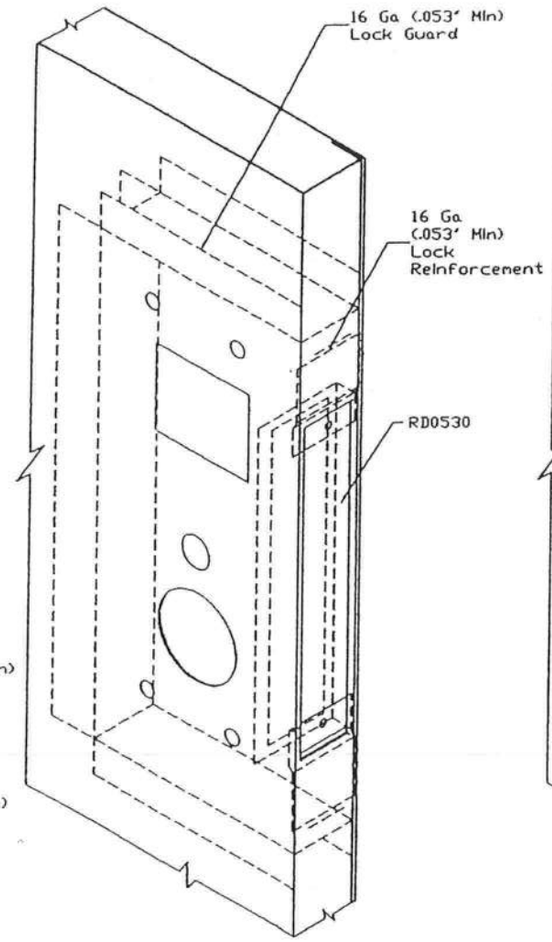

Saflok MT

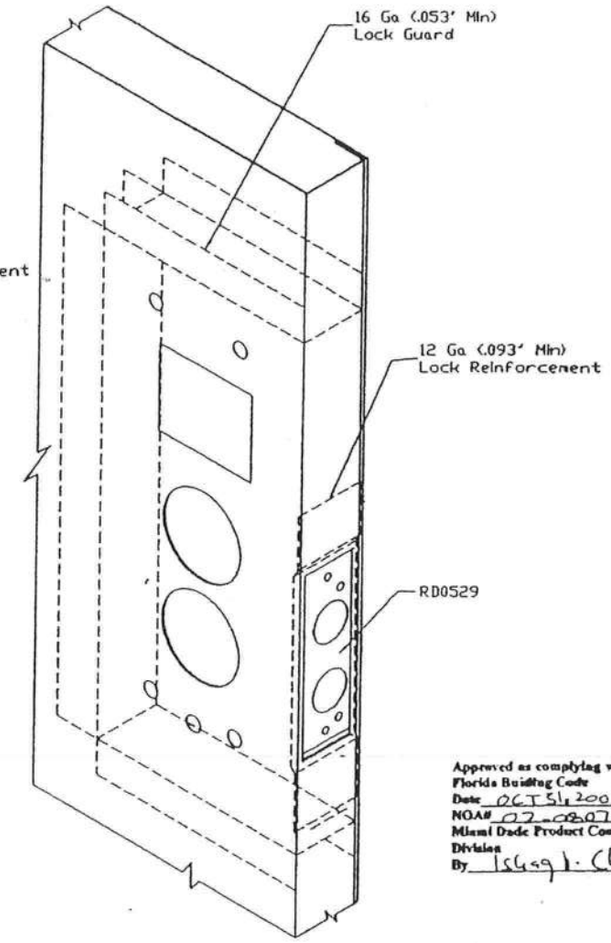

Saflok Premier SL2500

Approved as complying with the Florida Building Code
Date OCT 31, 2002
NOA# 02-0807.04
Miami Dade Product Control Division
By Ishwar L. Chandi

A 8/28/02 LT	Added RD0528, RD0529 & RD0530.
ISSUE	REVISIONS

MATERIAL SPECIFICATIONS:

Lock Reinforcement (Inswing Doors)
Regent, Omega, Imperial, Versadoor
Reinforcement Details

CECO DOOR PRODUCTS
Milan, Tennessee 38358

DRAWN BY:	DATE:
LT	5/28/02

DRAWING NUMBER:
RD0728
Sheet 4 of 9

*Note: Structural Member At Head Must Be Designed To Carry 58.3 #/ft. Load Imposed And Must Be Reviewed By Building Official.

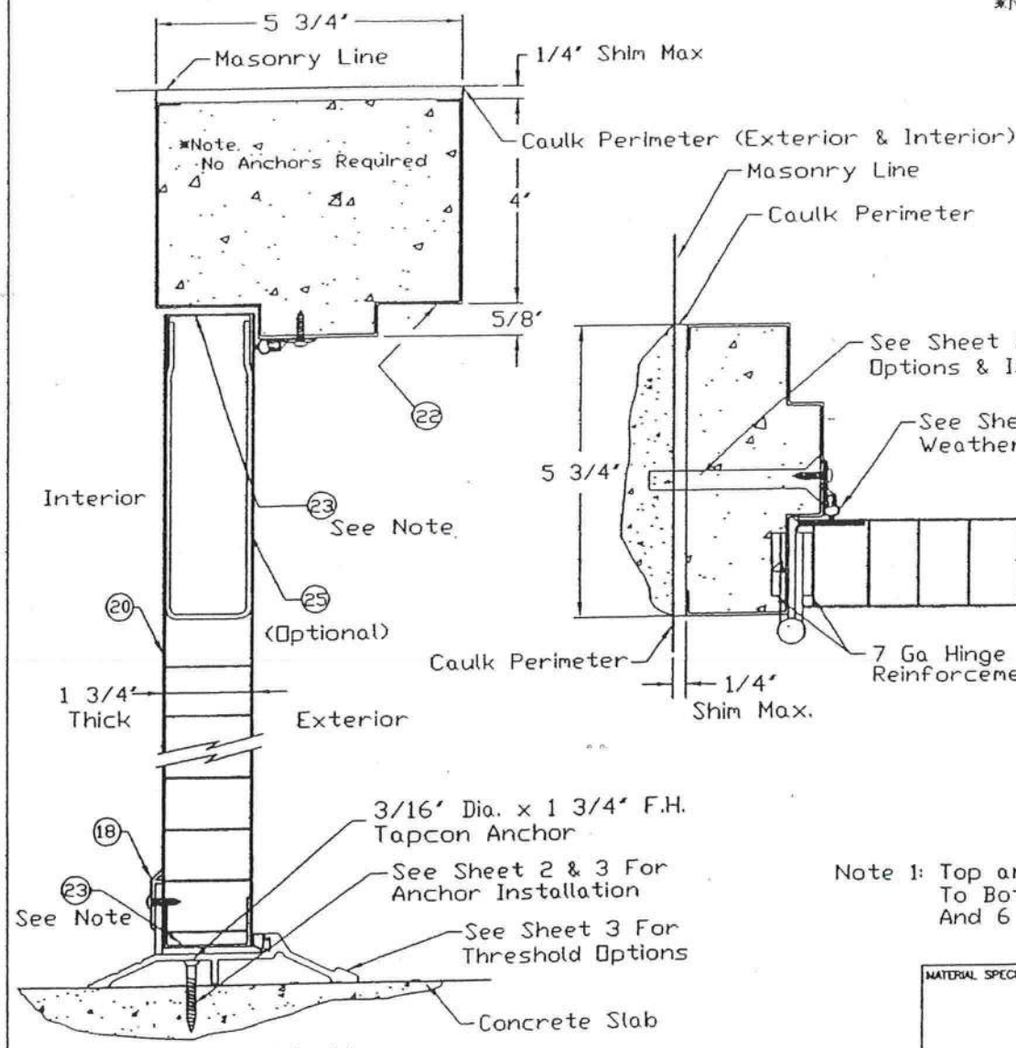

Section Y-Y

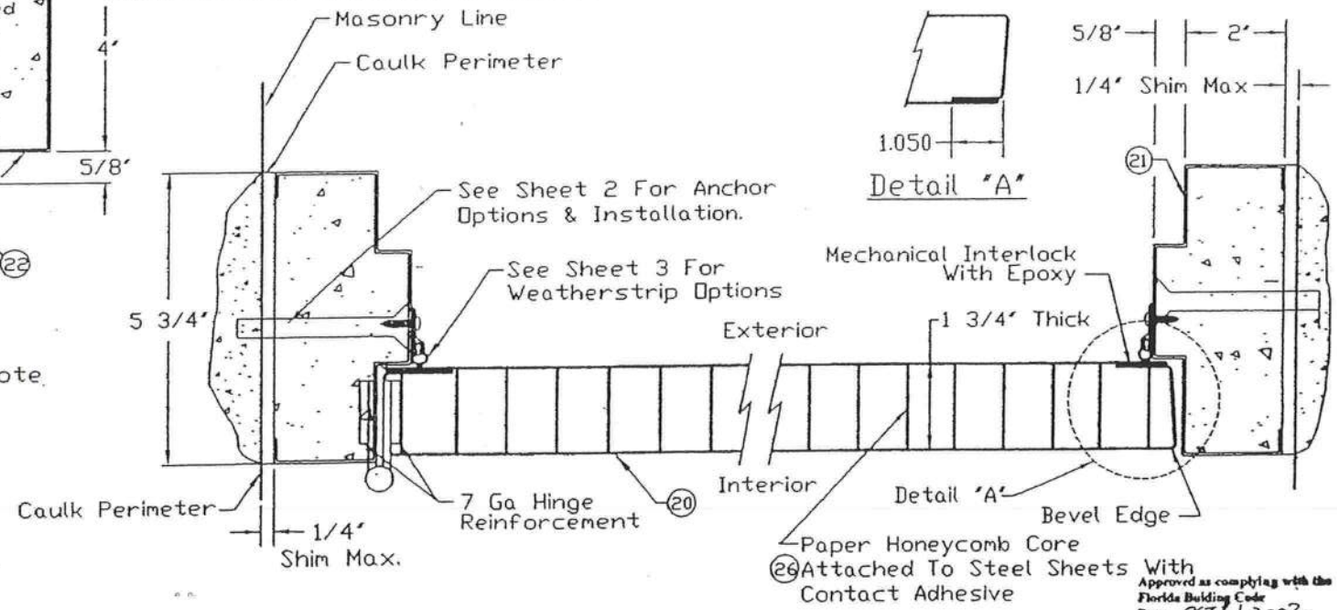

Section X-X

Note 1: Top and Bottom Channel Tack Welded To Both Skins 3 Inches From Lock Edge And 6 Inches On Centers

Approved as complying with the Florida Building Code
Date OCT 1, 2002
NOA# 02-0307.04
Miami Dade Product Control Division
By Ishaq I. Chanda

C 10/28/02 LT	Revised Per Marked -up Drawings From Ishaq Chanda.
B 8/26/02 LT	Revised Per Marked -up Drawings From Ishaq Chanda.
ISSUE	REVISIONS
DRAWN BY: LT	DATE: 5/22/02
DRAWING NUMBER: RD0728 Sheet 5 of 9	

MATERIAL SPECIFICATIONS:

Cross Section View (Inswing Doors) Regent Handed Door

CECO DOOR PRODUCTS
Milan, Tennessee 38358

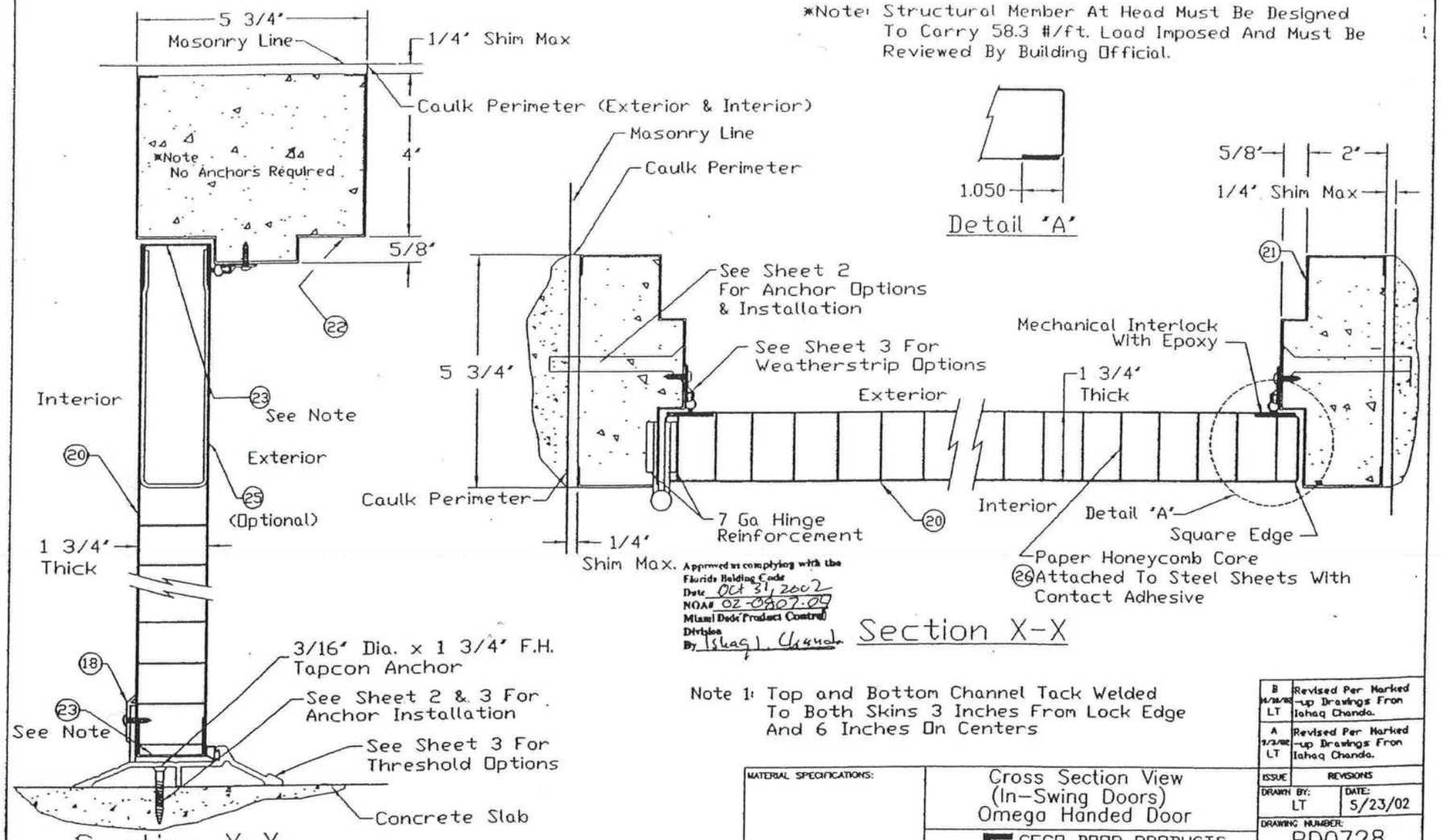

Note 1: Top and Bottom Channel Tack Welded
To Both Skins 3 Inches From Lock Edge
And 6 Inches On Centers

B 11/18/02 LT	Revised Per Marked -up Drawings From Ishaq Chando.
A 9/2/02 LT	Revised Per Marked -up Drawings From Ishaq Chando.
ISSUE	REVISIONS

MATERIAL SPECIFICATIONS:

Cross Section View
(In-Swing Doors)
Omega Handed Door

CECO DOOR PRODUCTS
Milan, Tennessee 38358

DRAWN BY: LT
DATE: 5/23/02
DRAWING NUMBER: RD0728
Sheet 6 of 9

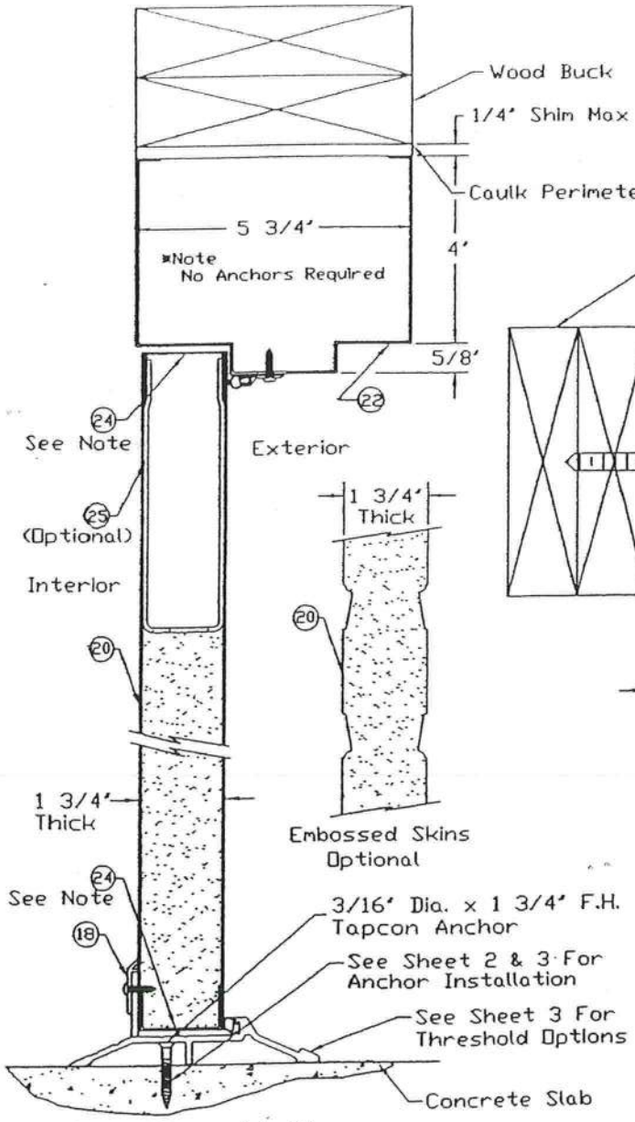

Section Y-Y

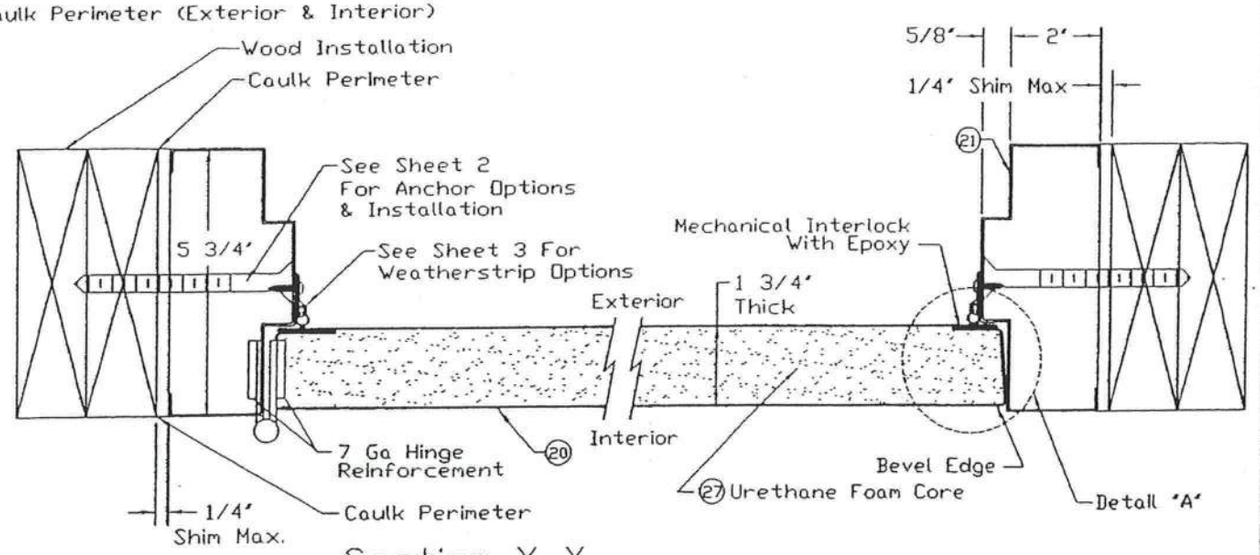

Section X-X.

Note: Structural member at Head Must Be Designed To carry 58.3 #/ft. Load Imposed And Must Be Reviewed By Building Official.

Note: Top & Bottom Channels Assembled Std Method To Skins With Spot Welds & Tape. Channels Are Then Tack Welded To Both Skins 3' From Lock Edge And 6 Inches On Center.

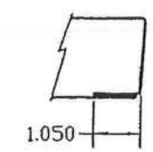

Detail 'A'

Embossed Skins
Optional

Approved as complying with the Florida Building Code
Date OCT 31, 2002
NOA# 02-0807.04
Miami Dade Product Control Division
By Ishaq J. Chanda

ISSUE	REVISIONS
B 9/4/02 LT	Revised Per Marked-Up Drawings From Ishaq Chanda.

DRAWN BY:	DATE:
LT	5/23/02

DRAWING NUMBER: RD0728
Sheet 7 of 9

MATERIAL SPECIFICATIONS:

Cross Section View
(In-Swing Doors)
Imperial Handed Door

CECO DOOR PRODUCTS
Milan, Tennessee 38358

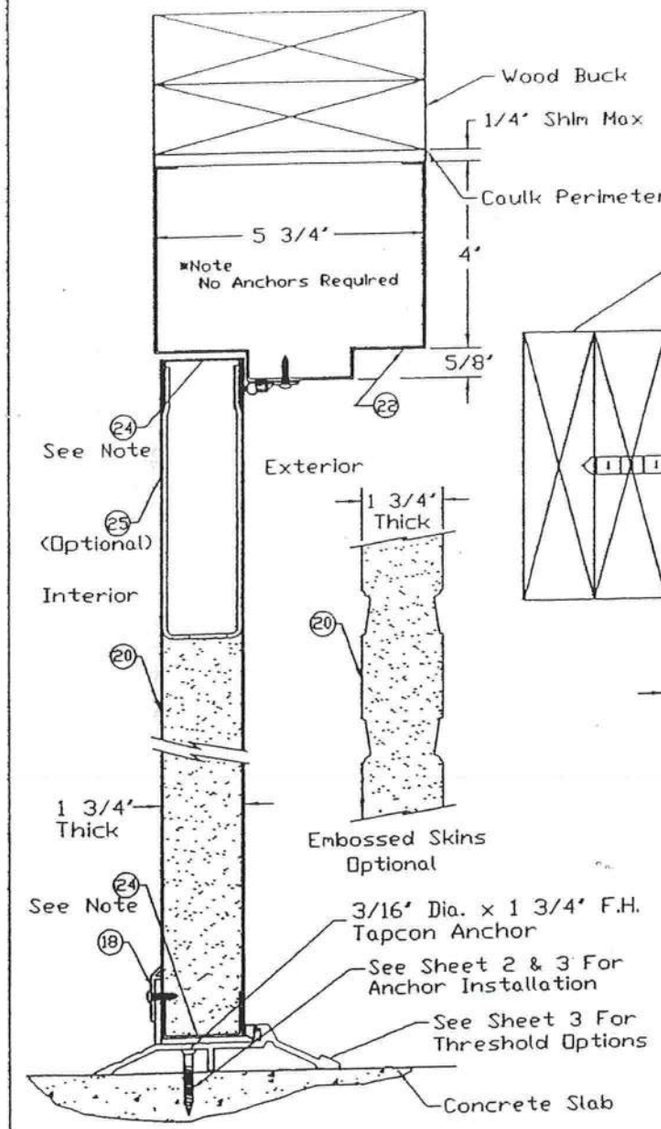

Section Y-Y

Note: Structural member at Head Must Be Designed To carry 58.3 #/ft. Load Imposed And Must Be Reviewed By Building Official.

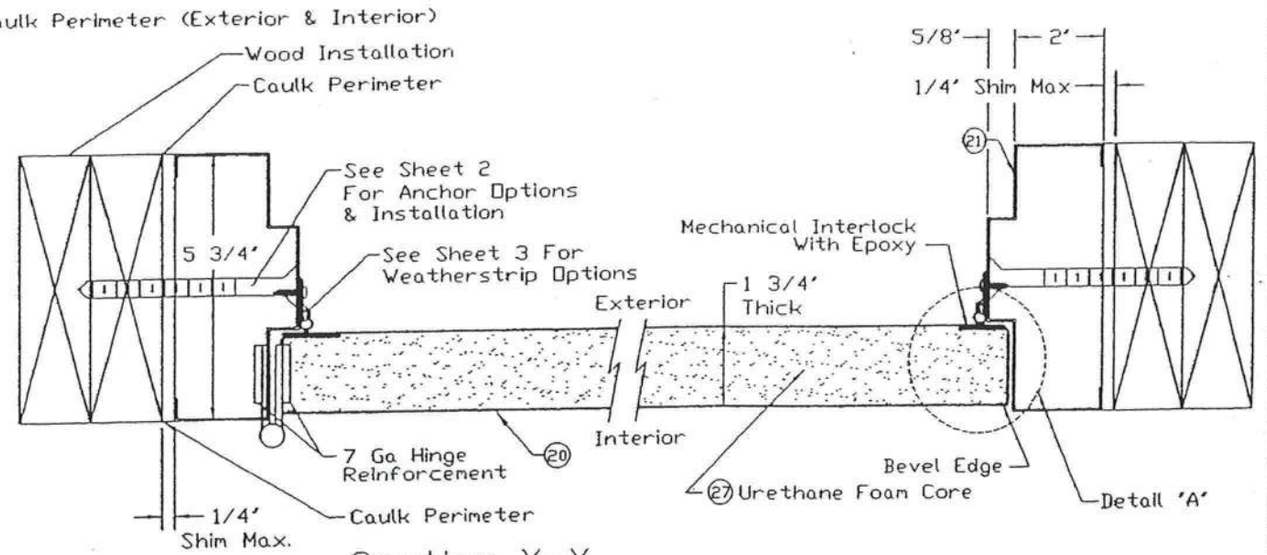

Section X-X

Note: Top & Bottom Channels Assembled Std Method To Skins With Spot Welds & Tape. Channels Are Then Tack Welded To Both Skins 3" From Lock Edge And 6 Inches On Center.

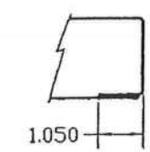

Detail 'A'

Approved as complying with the Florida Building Code
Date OCT 31, 2002
NOA# 02-0807.04
Miami Dade Product Control Division
By Ishaq I. Chanda

B 5/23/02 LT	Revised Per Marked-Up Drawings From Ishaq Chanda.
ISSUE	REVISIONS

MATERIAL SPECIFICATIONS:

Cross Section View
(In-Swing Doors)
Versadoor Handed Door

CECO DOOR PRODUCTS
Milan, Tennessee 38358

DRAWN BY: LT
DATE: 5/23/02
DRAWING NUMBER: RD0728
Sheet 8 of 9

1	Cylindrical Lock & Lock Reinforcement (RD0528)	Schlage	AL53PD
1A	Deadbolt (Optional) (D)	Schlage	B100
2	Or Cylindrical Lock & Lock Reinforcement	Saflok	Premier SL2500
3	Or Mortise Lock	Saflok	MT
4	Caulk	Dow Corning	899 Silicone Glazing Sealant
5	Threshold	Pemko	2005AV36
6	Or	Pemko	181AV36
7	Weatherstrip	Pemko	303AV3684
8	Hinge (Ball Bearing)	Hager or Equal (Attached w/ (8) #12-24 x 1/2 MS Per Hinge)	4-1/2 x 4-1/2 x .134 (Std Weight)
9	Or (Spring)	Hager or Equal (Attached w/ (8) #12-24 x 1/2 MS Per Hinge)	4-1/2 x 4-1/2 x .134 (Std Weight)
10	Weatherstrip	Pemko	S88
11	Frame Anchor	Masonary Tee (RD0057)	16 ga (.053' min) Galv Steel Fymin = 30ksi
12	Or	Wire, Relaxed Dimension 9' x 8'	#7 (.167 ' min) Galv Steel Wire (70,000 - 90,000 psi Tensile Strength)
13	Or	Expansion Bolt	3/8' x 5' F.H. Rawl Lok/Bolt Or 3/8' x 5' F.H. Ramset/RED Head
14	Or	Wood Lag Screw	3/8' x 4-5/8'
15	Viewer	Hager	1755
16	Or	MAG Security	8724-C
17	Drip Cap; Top	Pemko	346
18	Sweep	Pemko	315 N
19	Floor Anchor	Fixed Floor Anchor	16 ga (.053' min) galvanized Steel
20	Face Sheet A60 Galv Conforming To ASTM A653	Commercial Steel Type B (Minimum Yield Strength 30,000psi)	16 Ga (.053' min)
21	Series SF, Frame Jamb, Double Rabbet Profile, A60 Galv Conforming To ASTM A653	16 Ga (.053' min) Commercial Steel Type B (Minimum Yield Strength 30,000psi)	2' Face, 5-3/4' Depth Min. (RD0033)
22	Series SF, Frame Head, Double Rabbet, Profile A60 Galv Conforming To ASTM A653	16 Ga (.053' min) Commercial Steel Type B (Minimum Yield Strength 30,000psi)	4' Face, 5-3/4' Depth Min. (RD0033)
23	Door Channels; Spot Welded To Bottom Skin Glued To Top Skin; Tack Welded To Both	16 Ga (.053' min) A60 Galv Conforming To ASTM A653 Commercial Steel Type B (Minimum Yield Strength 30,000psi)	16 ga (.053' min) x 1' x 1-3/4' x 1'
24	Door Channels; Spot Welded To Bottom Skin Taped To Top Skin; Tack Welded To Both	16 Ga (.053' min) A60 Galv Conforming To ASTM A653 Commercial Steel Type B (Minimum Yield Strength 30,000psi)	16 ga (.053' min x 1' x 1-3/4' x 1'
25	Closer Reinforcement (Optional)	12 Ga (.093' min) CS Type B	12 ga (.093' min) x 5-3/8' x 16'
26	Honeycomb Core	Non-Impregnated Kraft Paper (E)	1.2' Nominal Cell Size
27	Urethane Core	Foam Enterprises	2 lb/ft^3 Density

Approved as complying with the Florida Building Code
Date Oct 31, 2002
NOA# 02-0807.04
Miami Dade Product Control Division
By Ishaq I. Chanda

ISSUE	REVISIONS
B 10/10/02 LT	Revised Per Marked-Up Drawings From Ishaq Chanda.
A 9/4/02 LT	Revised Per Marked-Up Drawings From Ishaq Chanda.

MATERIAL SPECIFICATIONS:

3-0 x 7-0 Series
In-Swing Bill Of Materials

CECO DOOR PRODUCTS
Milan, Tennessee 38358

DRAWN BY: LT
DATE: 5/28/02
DRAWING NUMBER: RD0728
Sheet 9 Of 9

Architectural Testing

ANSI/AAMA/NWWDA 101/I.S.2-97
TEST REPORT

Rendered to:

MI WINDOWS AND DOORS, INC.

SERIES/MODEL: 740/3740 (Fin and Flange)
PRODUCT TYPE: Aluminum Single Hung
(single glazed with 3/16" annealed glass)

	Summary of Results		
Title	**Test Specimen #1**	**Test Specimen #2**	**Test Specimen #3**
Description	Flange - Equal Lite	Fin - Equal Lite	Flange - Oriel
Rating	H-R25 53 x 72	H-R35 52 x 71	H-R45 53 x 72
Operating Force	19 lbf max.	20 lbf max.	N/A
Air Infiltration	0.11 cfm/ft^2	0.12 cfm/ft^2	N/A
Water Resistance Test Pressure	6.75 psf	6.75 psf	N/A
Uniform Load Deflection Test Pressure	+25.9 psf -34.7 psf	+35.3 psf -47.2 psf	+45.0 psf -47.2 psf
Uniform Load Structural Test Pressure	+45.6 psf -52.1 psf	+53.0 psf -70.8 psf	+67.5 psf -70.8 psf
Forced Entry Resistance	Grade 10	Grade 10	N/A

Reference should be made to ATI Report No. 42250.02-122-47 for complete test specimen description and data.

130 Derry Court
York, PA 17402-9405
phone: 717-764-7700
fax: 717-764-4129

Architectural Testing

ANSI/AAMA/NWWDA 101/I.S.2-97 TEST REPORT

Rendered to:

MI WINDOWS AND DOORS, INC.
P.O. Box 370
Gratz, Pennsylvania 17030-0370

Report No.:	42250.02-122-47
Test Dates:	02/04/05
Through:	02/17/05
Report Date:	02/17/05
Expiration Date:	02/17/09

Project Summary: Architectural Testing, Inc. (ATI) was contracted by MI Windows and Doors, Inc., to witness testing on three Series/Model 740/3740 (Fin and Flange), aluminum single hung windows at MI Windows and Doors, Inc., test facility in Elizabethville, Pennsylvania. The samples tested successfully met the performance requirements for the following ratings: Test Specimen #1: H-R25 53 x 72; Test Specimen #2: H-R35 52 x 71; Test Specimen #3: H-R45 53 x 72. Test specimen description and results are reported herein.

Test Specification: The test specimens were evaluated in accordance with ANSI/AAMA/NWWDA 101/I.S.2-97, *Voluntary Specifications for Aluminum, Vinyl (PVC) and Wood Windows and Glass Doors.*

Test Specimen Description:

Series/Model: 740/3740 (Fin and Flange)

Product Type: Aluminum Single Hung (single glazed with 3/16" annealed glass)

Test Specimen #1: H-R25 53 x 72

Overall Size: 4' 4" wide by 5' 11-1/4" high

Interior Sash Size: 4' 2-7/8" wide by 2' 11-3/4" high

Fixed Daylight Opening Size: 4' 1-1/8" wide by 2' 8-3/4" high

Screen Size: 4' 2" wide by 2' 11-7/16" high

130 Derry Court
York, PA 17402-9405
phone: 717-764-7700
fax: 717-764-4129

Test Specimen Description: (Continued)

Test Specimen #2: H-R35 52 x 71

Overall Size: 4' 5" wide by 6' 0-1/4" high

Interior Sash Size: 4' 2-7/8" wide by 2' 11-3/4" high

Fixed Daylight Opening Size: 4' 1-1/8" wide by 2' 8-3/4" high

Screen Size: 4' 2" wide by 2' 11-7/16" high

Test Specimen #3: H-R45 53 x 72

Overall Size: 4' 5" wide by 6' 0-1/4" high

Interior Sash Size: 4' 2-7/8" wide by 2' 7-1/16" high

Fixed Daylight Opening Size: 4' 1-1/8" wide by 3' 1-1/2" high

Screen Size: 4' 2" wide by 2' 6-13/16" high

The following descriptions apply to all specimens.

Finish: All aluminum was white.

Glazing Details: The glazing consisted of a single sheet of 3/16" thick clear annealed glass. The glass was channel glazed with a flexible wrap around rubber gasket.

Weatherstripping:

Description	Quantity	Location
0.187" backed by 0.330" high polypile with center fin	1 Row	Fixed interlock
0.187" backed by 0.150" high polypile with center fin	1 Row	Fixed stiles and top rail
0.187" backed by 0.130" high polypile	1 Row	Operable sash stiles

Test Specimen Description: (Continued)

Weatherstripping:

Description	Quantity	Location
0.187" backed by 0.250" high polypile with center fin	1 Row	Operable sash stiles
0.187" backed by 0.375" diameter hollow vinyl bulb seal	1 Row	Bottom rail

Frame Construction: The frame was constructed of extruded aluminum. Corners were coped, butted, sealed with a foam pad and secured with two #8 x 5/8" long pan head screws.

The fixed meeting rail was attached to the frame with one #8 x 1/2" screw per end. The fixed sash stiles were attached to the frame with one #8 x 1/2" screw at the top of the stile.

Sash Construction: The operable sash was constructed of extruded aluminum. Corners were coped, butted, and fastened with one #8 x 5/8" long pan head screw. The fixed lite frame consisted of the fixed meeting rail and three extruded members that slid into the main frame jambs and head. The corners were coped and butted. The fixed top rail was attached to the stile with one #6 x 5/8" screw at each corner.

Screen Construction: All sash members were constructed of extruded aluminum. The corners were coped, butted, sealed, and fastened with one 5/8" screw through the jambs into the rails screw bosses.

Hardware:

Description	Quantity	Location
Metal cam lock	2	6-1/2" from ends of interior meeting rail attached with two #8 x 1/2" screws
Plastic tilt latch	2	Ends of interior meeting rail attached with one #8 x 1/2" screw and the sash corner screw
Spring loaded cast metal pivot bar	2	Ends of bottom rail staked in place
Spiral balance	2	One per jamb

Test Specimen Description: (Continued)

Drainage: A sloped sill was utilized on the window. The ends of the exterior vertical leg were cut 7/16" short to allow for drainage.

Reinforcement: No reinforcement was utilized.

Installation: The units were installed into a wood test buck. The flange units were fastened to the buck with #8 x 1-1/4" screws at the jambs, 5" from each end and one at midspan. The head utilized #8 x 3/4" pan head screws, 6" from each end and one at midspan. The exterior perimeter was sealed with silicone. The fin units were installed into a 2x8 #2 Spruce-Pine-Fir wood test buck utilizing 1-5/8" drywall screws located 3" from the corners and 10" on center around the nail-fin. The nail fin was bedded in silicone.

Test Results:

The results are tabulated as follows:

Paragraph	Title of Test - Test Method	Results	Allowed
Test Specimen #1: H-R25 53 x 72			
2.2.2.6.1	Operating Force	19 lbf	30 lbf max.
2.1.2	Air Infiltration per ASTM E 283 1.57 psf (25 mph)	0.11 cfm/ft^2	0.3 cfm/ft^2 max.

***Note #1**: The tested specimen meets the performance levels specified in ANSI/AAMA/NWWDA 101/I.S.2-97 for air infiltration.*

2.1.3	Water Resistance per ASTM E 547 (with and without screen) 2.86 psf	No leakage	No leakage
2.1.4.1	Uniform Load Deflection per ASTM E 330 (Deflections reported were taken on the meeting rail) (Loads were held for 52 seconds)		
	15.0 psf (positive)	0.38"	See Note #2
	15.0 psf (negative)	0.33"	See Note #2

***Note #2**: The Uniform Load Deflection test is not a requirement of ANSI/AAMA/NWWDA 101/I.S.2-97 for this product designation. The deflection data is recorded in this report for special code compliance and information only.*

Test Results: (Continued)

Paragraph	Title of Test - Test Method	Results	Allowed
Test Specimen #1: H-R25 53 x 72 (Continued)			
2.1.4.2	Uniform Load Structural per ASTM E 330		
	(Permanent sets reported were taken on the meeting rail)		
	(Loads were held for 10 seconds)		
	22.5 psf (positive)	<0.01"	0.20" max.
	22.5 psf (negative)	<0.01"	0.20" max.
2.2.2.6.2	Deglazing Test per ASTM E 987		
	In operating direction - 70 lbs		
	Interior meeting rail	0.12"/24%	0.50"/100%
	Bottom rail	0.13"/26%	0.50"/100%
	In remaining direction - 50 lbs		
	Left stile	0.09"/18%	0.50"/100%
	Right stile	0.09"/18%	0.50"/100%
2.1.8	Forced Entry Resistance per ASTM F 588		
	Type: A	Grade: 10	
	Lock Manipulation Test	No entry	No entry
	Test A1 through A5	No entry	No entry
	Test A7	No entry	No entry
	Lock Manipulation Test	No entry	No entry
Optional Performance			
4.3	Water Resistance per ASTM E 547		
	(with and without screen)		
	6.75 psf	No leakage	No leakage
4.4.1	Uniform Load Deflection per ASTM E 330		
	(Deflections reported were taken on the meeting rail)		
	(Loads were held for 52 seconds)		
	25.9 psf (positive)	0.52"	See Note #2
	34.7 psf (negative)	0.75"	See Note #2

Test Results: (Continued)

Paragraph	Title of Test - Test Method	Results	Allowed
Test Specimen #1: H-R25 53 x 72 (Continued)			
Optional Performance: (Continued)			
4.4.2	Uniform Load Structural per ASTM E 330 (Permanent sets reported were taken on the meeting rail) (Loads were held for 10 seconds)		
	45.6 psf (positive)	0.03"	0.20" max.
	52.1 psf (negative)	0.01"	0.20" max.
Test Specimen #2: H-R35 52 x 71			
2.2.2.6.1	Operating Force	20 lbf	30 lbf max.
2.1.2	Air Infiltration per ASTM E 283		
	1.57 psf (25 mph)	0.12 cfm/ft^2	0.3 cfm/ft^2 max.

***Note #1**: The tested specimen meets the performance levels specified in ANSI/AAMA/NWWDA 101/I.S.2-97 for air infiltration.*

2.1.3	Water Resistance per ASTM E 547 (with and without screen)		
	2.86 psf	No leakage	No leakage
2.1.4.1	Uniform Load Deflection per ASTM E 330 (Deflections reported were taken on the meeting rail) (Loads were held for 52 seconds)		
	15.0 psf (positive)	N/A	See Note #3
	15.0 psf (negative)	N/A	See Note #3
2.1.4.2	Uniform Load Structural per ASTM E 330 (Permanent sets reported were taken on the meeting rail) (Loads were held for 10 seconds)		
	22.5 psf (positive)	N/A	See Note #3
	22.5 psf (negative)	N/A	See Note #3

***Note #3**: The client opted to start at a pressure higher than the minimum required. Those results are reported under "Optional Performance".*

Test Results: (Continued)

Paragraph	Title of Test - Test Method	Results	Allowed
Test Specimen #2: H-R35 52 x 71 (Continued)			
2.2.2.6.2	Deglazing Test per ASTM E 987		
	In operating direction - 70 lbs		
	Interior meeting rail	0.12"/24%	0.50"/100%
	Bottom rail	0.13"/26%	0.50"/100%
	In remaining direction - 50 lbs		
	Left stile	0.09"/18%	0.50"/100%
	Right stile	0.09"/18%	0.50"/100%
2.1.8	Forced Entry Resistance per ASTM F 588		
	Type: A	Grade: 10	
	Lock Manipulation Test	No entry	No entry
	Test A1 through A5	No entry	No entry
	Test A7	No entry	No entry
	Lock Manipulation Test	No entry	No entry
Optional Performance			
4.3	Water Resistance per ASTM E 547 (with and without screen) 6.75 psf	No leakage	No leakage
4.4.1	Uniform Load Deflection per ASTM E 330 (Deflections reported were taken on the meeting rail) (Loads were held for 52 seconds)		
	35.3 psf (positive)	0.72"	See Note #2
	47.2 psf (negative)	1.13"	See Note #2
4.4.2	Uniform Load Structural per ASTM E 330 (Permanent sets reported were taken on the meeting rail) (Loads were held for 10 seconds)		
	53.0 psf (positive)	0.08"	0.20" max.
	70.8 psf (negative)	0.08"	0.20" max.

Test Results: (Continued)

Paragraph	Title of Test - Test Method	Results	Allowed
Test Specimen #3: H-R45 53 x 72			
Optional Performance			
4.4.1	Uniform Load Deflection per ASTM E 330 (Deflections reported were taken on the meeting rail) (Loads were held for 52 seconds)		
	45.0 psf (positive)	1.20"	See Note #2
	47.2 psf (negative)	1.05"	See Note #2
4.4.2	Uniform Load Structural per ASTM E 330 (Permanent sets reported were taken on the meeting rail) (Loads were held for 10 seconds)		
	67.5 psf (positive)	0.15"	0.20" max.
	70.8 psf (negative)	0.05"	0.20" max.

Detailed drawings, representative samples of the test specimen, and a copy of this report will be retained by ATI for a period of four years from the original test date. The above results were secured by using the designated test methods and they indicate compliance with the performance requirements of the above referenced specification. This report does not constitute certification of this product, which may only be granted by the certification program administrator. This report may not be reproduced, except in full, without approval of Architectural Testing, Inc.

For ARCHITECTURAL TESTING, INC:

Jeramie D. Grabosch

Digitally Signed by: Jeramie D. Grabosch

Jeramie D. Grabosch
Technician

Digitally Signed by: Steven M. Urich

Steven M. Urich, P.E.
Senior Project Engineer

JDG:jdg/vlm

06172/TRI
BuyLine 4916

TrimJoist®

ENGINEERED WOOD PRODUCTS

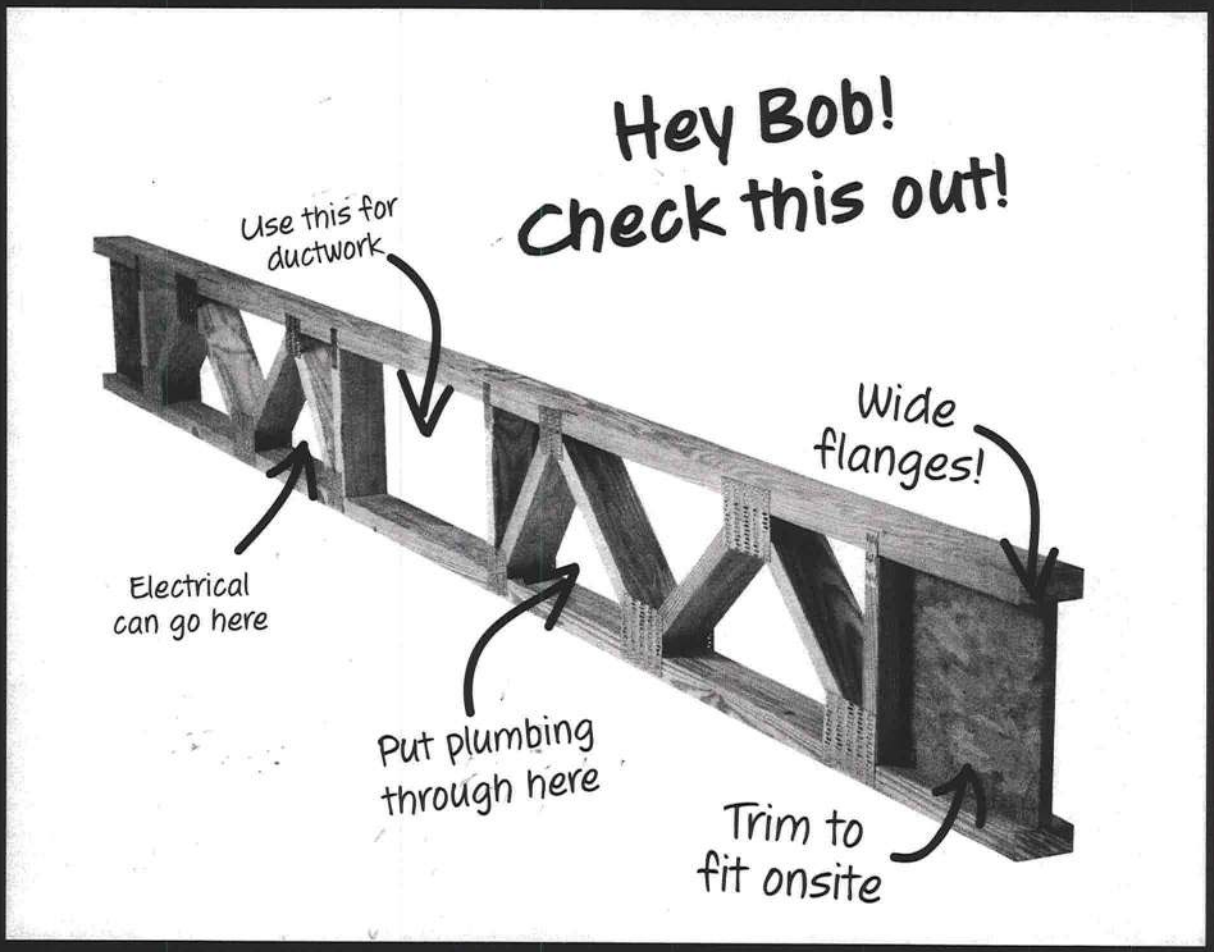

Wood truss joists that can be trimmed at the jobsite

IT'S CONTRACTOR FRIENDLY.
The end sections can be trimmed onsite.

IT SAVES MONEY AND TIME.
With strut-webbing, there's no need for subcontractors to cut holes.

IT'S STRONGER.
You don't weaken the joist with holes.

IT HAS WIDE FLANGES.
With 3.5-inch flanges on the top and bottom, subfloor application is simple. Nailing and gluing are easier.

IT COMES WITH A GREAT TECHNICAL SUPPORT TEAM.
Just call our toll-free number for custom engineering.

1 800 844-8281
www.trimjoist.com

LOAD TABLES AND DESIGN NOTES

The uniform load span charts below indicate the maximum design spans (including a 1-1/2" minimum bearing at each end) for each family of TrimJoist® floor joists. Each chart is divided into columns which represent common design loadings and rows which show typical spacings. Most residential designs require a minimum of 55 psf loading. Floors used for heavy traffic and/or heavy floor coverings (e.g. Tile) should be designed at 60 psf minimum. All loads are broken down into Live, Top-dead and Bottom-dead components. For example, the 55 psf column is really 40 psf live plus 10 psf top-dead plus 5 psf bottom-dead for a total of 55 psf. Dead loads are the weight of construction materials and are always present for the whole life of the structure. Live loads, on the other hand, are transient and are never constant over the life of the structure. Select the appropriate column based on the dead loads of your construction materials. These charts are for uniformly loaded, clear span, simply supported joists. For special applications requiring concentrated loads, asymmetric continuous loads, cantilevers, or special bearing conditions please consult a TrimJoist® representative or authorized dealer. The TPDS computer program can be used to analyze almost any loading and/or bearing condition.

	Loading	55 PSF (40/10/5)		60 PSF (40/10/10)	
11 1/4" Deep	Spacing 12	24'- 0"	L/497	24'- 0"	L/497
	16	22'- 0"	L/485	22'- 0"	L/485
	19.2	21'- 2"	L/453	21'- 2"	L/453
	24	19'- 7"	L/455	19'- 7"	L/455
14" Deep	Spacing 12	26'- 0"	L/633	26'- 0"	L/633
	16	26'- 0"	L/475	26'- 0"	L/475
	19.2	24'-10"	L/453	24'-10"	L/453
	24	23'- 0"	L/452	22'- 0"	L/517

	Loading	55 PSF (40/10/5)		60 PSF (40/10/10)	
16" Deep	Spacing 12	28'- 0"	L/676	28'- 0"	L/676
	16	28'- 0"	L/507	28'- 0"	L/507
	19.2	27'- 4"	L/453	27'- 4"	L/453
	24	25'- 5"	L/450	25'- 5"	L/450
18" Deep	Spacing 12	30'- 0"	L/710	30'- 0"	L/710
	16	30'- 0"	L/532	30'- 0"	L/532
	19.2	29'-10"	L/451	29'-10"	L/451
	24	27'- 7"	L/468	27'- 3"	L/473

Notes on Span Charts

1. Spans are based on uniformly loaded joists and include allowances for repetitive use members.
2. Live loads of 40 psf are assumed. Additional dead loads should be chosen based on construction materials.
3. All TrimJoist® floor joists have a TOP orientation and should not be installed upside-down.
4. Stiffness factors (L/xxx) assume a minimum 3/4-inch span-rated subfloor that has been both glued and nailed.
5. Limit total reaction (per end) to that indicated in the Maximum Reaction Table at the right.
6. Do not apply center supports, cantilevers, concentrated, or asymmetrical continuous loads without first consulting a TrimJoist® representative.

Maximum Reaction Table

Width	1 1/2	3 1/2	5 1/2
Max	3000	3500	4000

Width is the width of the loaded wall above, or the bearing wall width whichever is less.

Note About Floor Stiffness: Floor performance is greatly influenced by joist stiffness. Experience has shown that a floor system designed to minimum code acceptance may not meet the expectations of discerning owners. TrimJoist Corporation strongly recommends that floor spans be limited to those indicated in the charts above. The numbers in these charts far exceed minimum code requirements and are based on both gluing and nailing the subfloor. In cases where the subfloor is nailed only, spans remain the same, but the stiffness must be reduced by 20%. For optimal performance use screws in lieu of nails.

Opening Sizes

	J12	J14	J16	J18
H	11 1/4"	14"	16"	18"
D	5"	8"	9"	10"
R1	8x16	10x24	12x24	14x24
R2	4x9	4x10 6x6	4x12 6x8	4x14 6x10 8x8

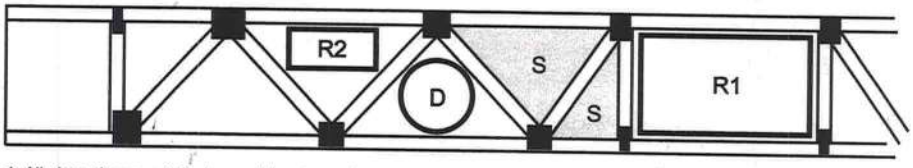

1. All sizes given are in inches and denote maximum expected clearance.
2. Rectangular opening (R1) is provided at centerline of stock length.
3. Only opening D available in 4' stock length (one opening only).
4. Only opening R1 available in 6' and 8' stock length.
5. Openings R2 & D not applicable in shaded areas (s).

Amended June 1, 2004

GOOD FRAMING PRACTICE

DO Install TrimJoist® right side up. TOP is stamped on the top of each joist.

DO Make sure that each TrimJoist® bears on the bottom flange beneath the TrimEnd section or beneath the first metal plate if the TrimEnd section has been removed.

DO Use strongback stiffeners. Although not required for structural performance, strongback adds additional resistance to impact loadings.

DO Provide appropriate bearing width at each end of the TrimJoist®. The required width can be found in the Maximum Reaction Table above. Use vertical web stiffeners where reactions exceed these values.

DO Use TrimJoist® approved hangers for flush-mounted bearing conditions. These may be purchased from your local TrimJoist® dealer.

DO Use an appropriately rated sub-floor that has been both glued and nailed/screwed to the top flange of the TrimJoist®.

DO Consult your TrimJoist® dealer or representative about special loading or bearing conditions not addressed in this Application Guide.

DO NOT cut any part of the TrimJoist® except for the TrimEnd® sections which are specifically designed to be field cut.

DO NOT remove, cut or alter any metal plate connector on the TrimJoist® without first consulting a factory engineer.

DO NOT install the TrimJoist® upside down without first consulting a TrimJoist® factory engineer.

DO NOT use a TrimJoist® as a header or beam except as may be instructed by a TrimJoist® engineer.

DO NOT allow the TrimJoist® to be supported by the top flange. All support must be from under the bottom flange.

DO NOT depend on "toe nailing" to provide adequate support capacity for flush-mounted framing. Consult your local TrimJoist® dealer or a TrimJoist® factory engineer for proper hanger selection.

DO NOT apply special support or load conditions without first consulting a TrimJoist® representative.

TrimJoist®

SEE US IN DIRECTORY CATALOG FILES CD SWEETS.COM

Copyright © 1997- 2004 -TrimJoist® Corporation - USA - All Rights Reserved
TrimJoist® and TrimEnd® are trademarks of the TrimJoist® Corporation. Printed in the USA.

TrimJoist®

Floor Application Guide

A product of the TrimJoist® Corporation
(800) 844-8281 • www.trimjoist.com

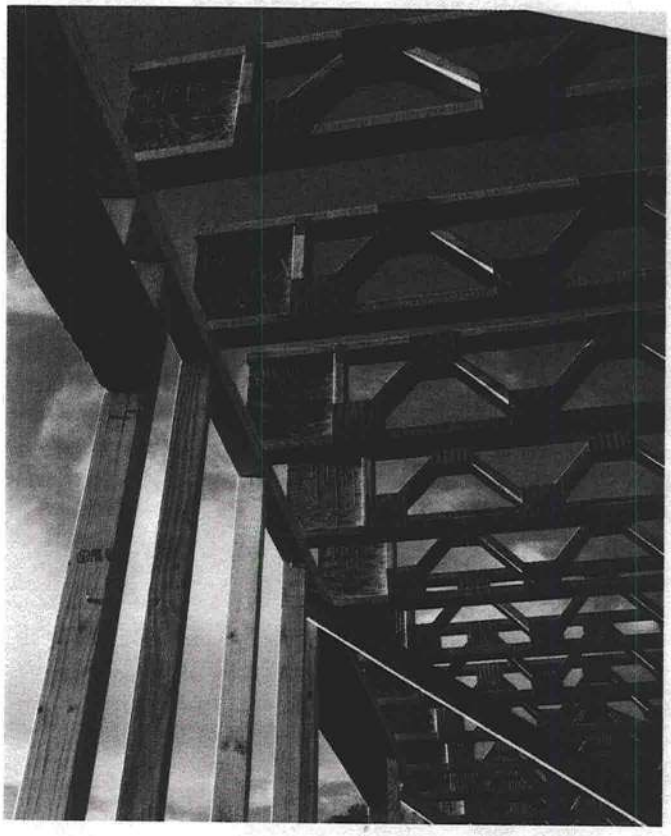

SILENCE. The TrimJoist® provides a full 3-1/2" wide surface for the proper nailing and gluing of subfloor materials. By providing such a wide surface, the TrimJoist® allows the builder to use subfloor framing tolerances that will prevent squeaks. The wide surface also allows for the application of sufficient glue to make the TrimJoist® and the subfloor truly act as a unified system.

QUALITY. The TrimJoist® addresses product consistency and product quality from three key perspectives:

DESIGN. The TrimJoist® was initially designed using the most capable structural engineers and computer software systems available from both inside and outside the forest products industry. This includes the PPSA system from Purdue University as well as Rasna finite element software from Parametric Technology.

MATERIAL CONTROL. All raw material components are structurally rated by various independent agencies such as the Truss Plate Institute (TPI), Southern Pine Inspection Bureau (SPIB), American Plywood Association (APA), American Society for Testing and Materials (ASTM), and of course ANSI. In fact, all TrimJoist® floor trusses now conform to the new ANSI/TPI-1995 standard. In addition, all lumber components of the TrimJoist® are subject to a strict "cull" process where questionable pieces are discarded before entering into the production process.

PRODUCTION TESTING. In addition to the rigorous testing performed on prototype units during the development phase of the TrimJoist®. All production runs are subject to periodic, random tests. These tests are conducted to the standards of the Truss Plate Institute (TPI) Test Truss Specification. No other production floor truss is subjected to such ongoing scrutiny and improvement.

ENVIRONMENT. The TrimJoist® design allows for the utilization of lumber from plantation-grown trees, thus sparing the "old-growth" forests that are necessary to produce all traditional wide-board joists. In addition, our engineered strength allows for longer spans and greater on-center spacing. This not only reduces construction costs, but can reduce the board footage of wood fiber required by up to 12% over traditional joists.

By design, approximately 40% of the TrimJoist® material content is from recycled sources. In addition, our manufacturing process recovers over 97% of its generated waste.

INNOVATION. The TrimJoist® is produced in stock lengths that range from 4' to 30', in standard 2-foot increments. Because each joist has 12-inches of trim at each end, a continuous range of spans is possible. Complex angled walls? No problem for the TrimJoist®.

The open web design of the TrimJoist® allows for the utilization of that valuable floor cavity space. It's now practical for duct work, wiring, and plumbing to be contained within this cavity. This eliminates unsightly and expensive furring. Free access to the floor cavity requires no cutting or notching that can severely impair the structural integrity of other joists products of inferior design.

SERVICE. Put simply, the TrimJoist® is the superior product for floor joist applications. To aid architects, building designers, and contractors we offer toll-free access to a TrimJoist® representative. By simply calling (800) 844-8281 you can gain immediate assistance with your question or framing issue.

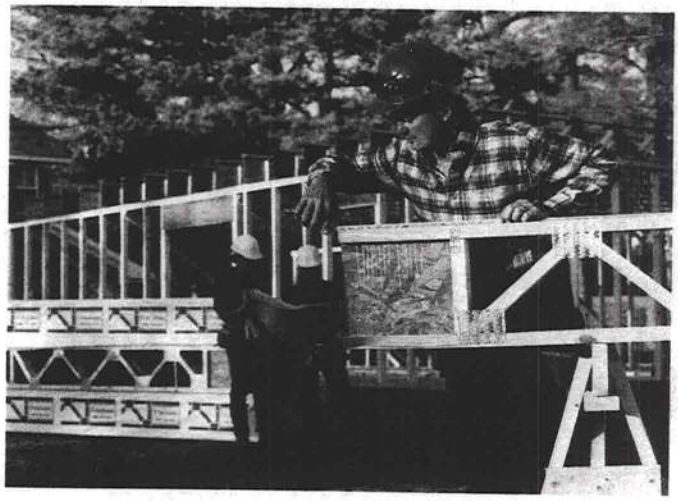

WARRANTY TrimJoist® Corporation warrants its products to be free from defects in material and workmanship as generally accepted in the industry. Said products are further warranted as to adequacy of design, provided products are used in strict accordance with TrimJoist® Corporation's then currently published design limits and are installed in a workmanlike manner. Said warranties do not apply in the event products are altered in any way other than intended by design. TrimJoist® Corporation's obligations under this warranty shall be limited to the replacement or repair of those products demonstrated to be defective. Such remedy shall constitute Customer's sole and exclusive remedy and customer, through the use of this product, agrees that no other remedy (including, but not limited to claims for INCIDENTAL, CONSEQUENTIAL or SPECIAL DAMAGES, OR ANY CAUSE, LOSS, ACTION, CLAIM OR DAMAGE, INCLUDING LOSS OF TIME WHATSOEVER, OR INJURY TO PERSONS OR PROPERTY OR ANY OTHER CONSEQUENTIAL DAMAGE OR INCIDENTAL OR ECONOMIC LOSS) shall be available to customer whether said claims be asserted on the basis of warranty, negligence, strict liability, or otherwise. THIS WARRANTY IS EXPRESSLY IN LIEU OF ALL OTHER WARRANTIES, EXPRESSED OR IMPLIED, INCLUDING ANY WARRANTIES OF MERCHANTABILITY AND FITNESS FOR ANY PARTICULAR PURPOSE. ALL OF SUCH OTHER WARRANTIES BEING HEREBY EXPRESSLY EXCLUDED.

U.S. Patent 5,761,872 • U.S. Patent 6,139,667 • Additional Patents Pending

Installation Details Available in CAD format at trimjoist.com and sweets.com

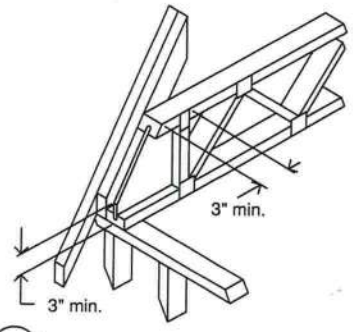

D1 RAFTER/FIRE CUT

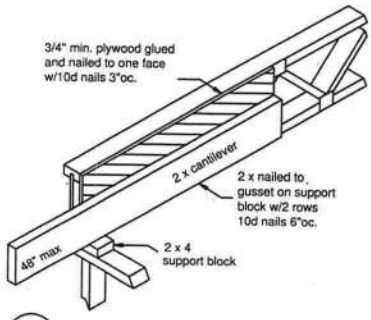

D2 DECK CANTILEVER

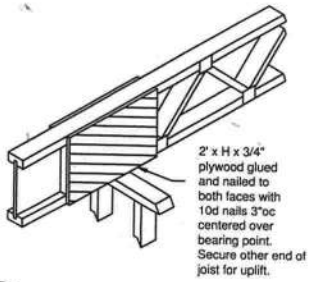

D3 CANTILEVER

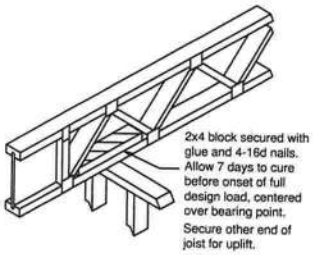

D4 CANTILEVER

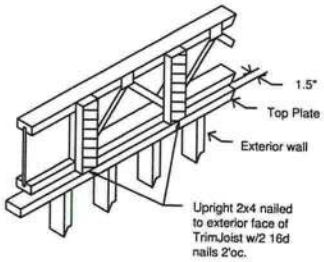

D5 EXTERIOR KNEE WALL

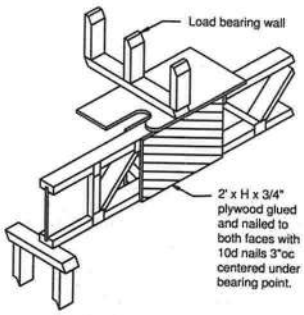

D6 POINT LOAD APPLICATION

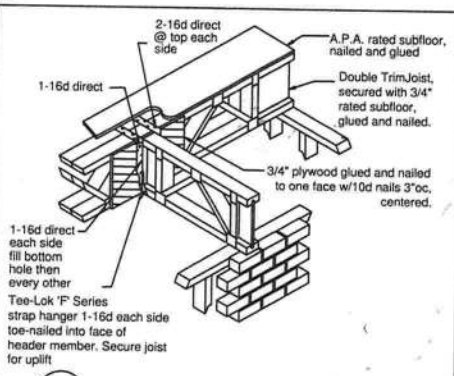

D7 HANGERED CANTILEVER

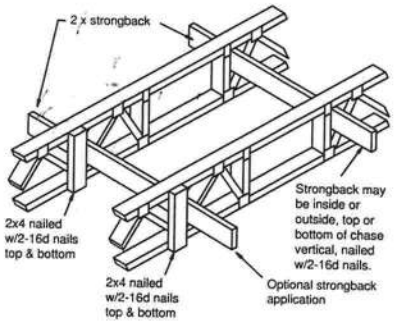

D8 STRONGBACK APPLICATION

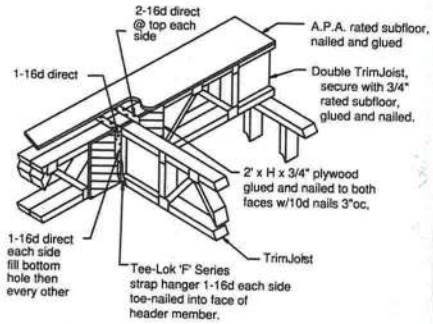

D9 HANGERED/ JOIST TO JOIST

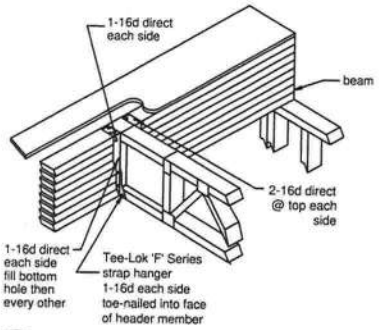

D10 HANGERED/ JOIST TO BEAM

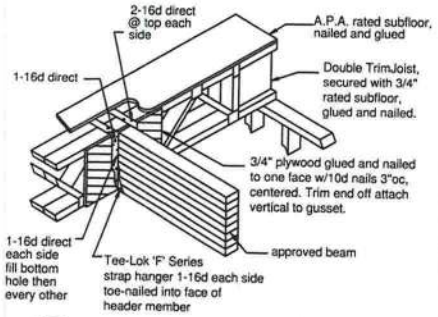

D11 HANGERED/ BEAM TO JOIST

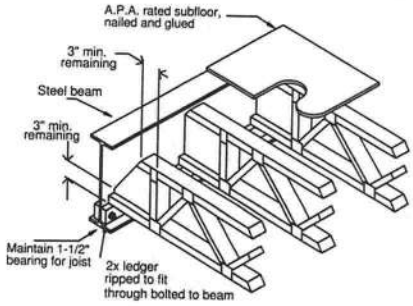

D12 FLUSH TO STEEL BEAM

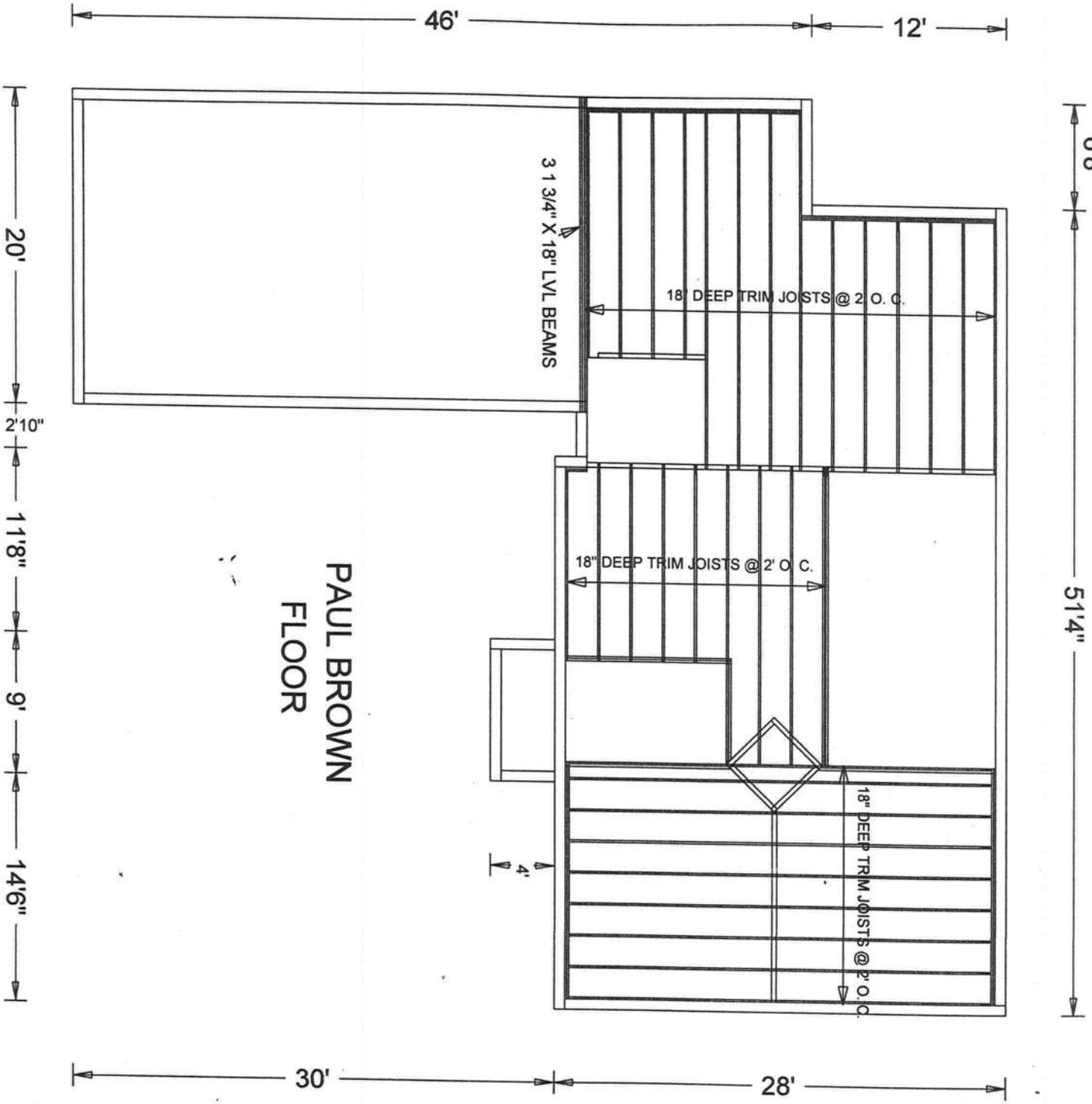

PAGE NO: 1 OF 1	JOB NO: 5-318	DESIGNED BY:	JOB DESCRIPTION: PAUL BROWN/FLOOR	JOB LOCATION:

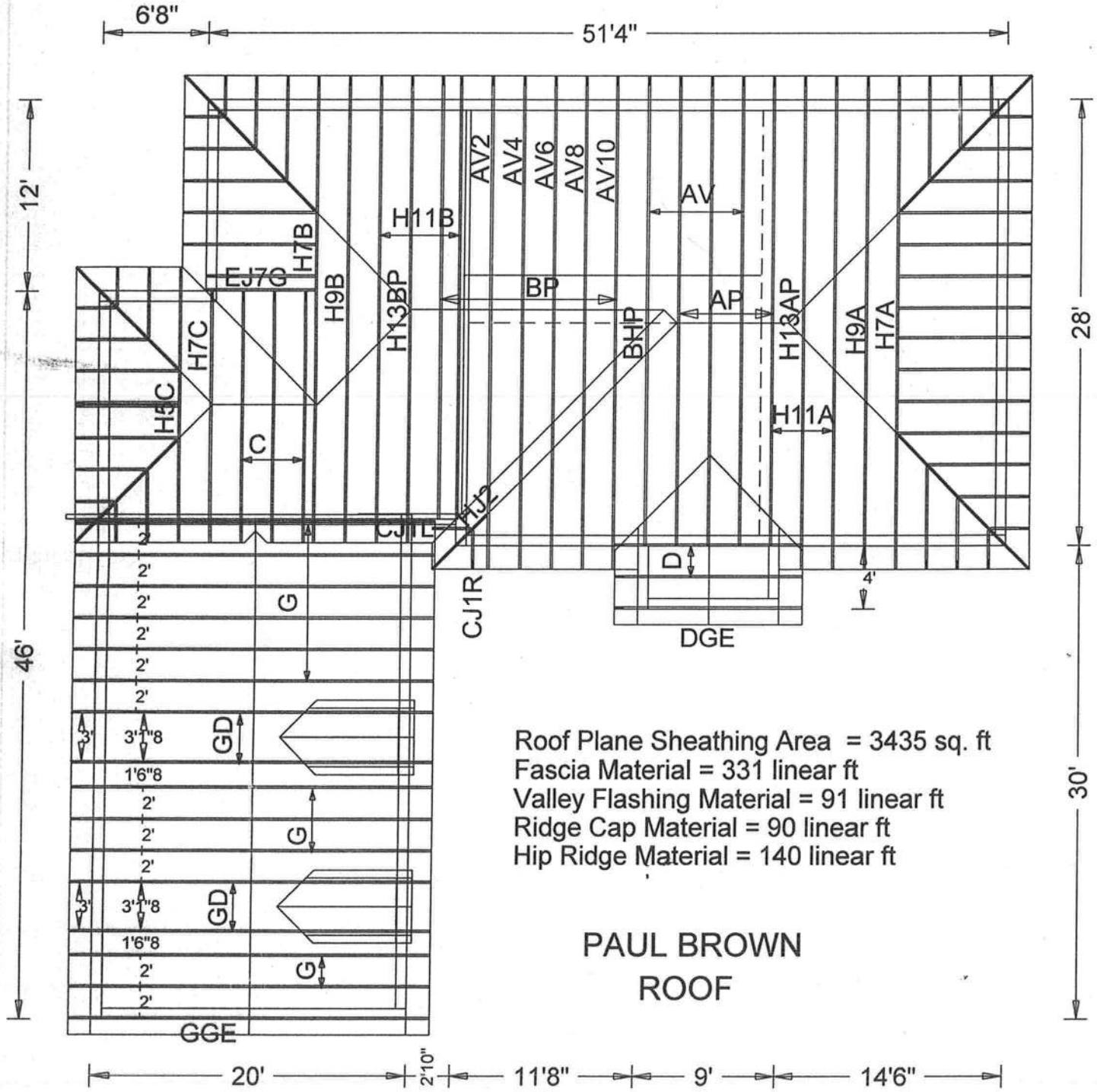

Roof Plane Sheathing Area = 3435 sq. ft
Fascia Material = 331 linear ft
Valley Flashing Material = 91 linear ft
Ridge Cap Material = 90 linear ft
Hip Ridge Material = 140 linear ft

PAUL BROWN
ROOF

JOB LOCATION:

JOB DESCRIPTION: PAUL BROWN/ROOF

DESIGNED BY:

JOB NO: 5-318A

PAGE NO: 1 OF 1

Alpine Engineered Products, Inc.

1950 Marley Drive Haines City, FL 33844
Florida Engineering Certificate of Authorization Number: 567
Florida Certificate of Product Approval # FL1999
 Document ID:1SPC487-Z0104135803

Truss Fabricator: Anderson Truss Company
Job Identification: 5-318A-PAUL BROWN/ROOF
Truss Count: 35
Model Code: Florida Building Code 2001
Truss Criteria: ANSI/TPI-1995(STD)/FBC
Engineering Software: Alpine Software,Version 7.04.
Structural Engineer of Record:
Address:
Minimum Design Loads: Roof - 40.0 PSF @ 1.25 Duration
Floor - N/A
Wind - 110 MPH ASCE 7-98 -Closed

Seal Date: 08/04/2005

-Truss Design Engineer-
Arthur R. Fisher
Florida License Number: 59687
1950 Marley Drive
Haines City, FL 33844

Notes:

1. Determination as to the suitability of these truss components for the structure is the responsibility of the building designer/engineer of record, as defined in ANSI/TPI 1-1995 Section 2.2
2. The drawing date shown on this index sheet must match the date shown on the individual truss component drawing.
3. As shown on attached drawings; the drawing number is preceded by: HCUSR487

Details: BRCLBSUB-A11030EC-GBLLETIN

#	Ref Description	Drawing#	Date
1	93372--H7A	05216044	08/04/05
2	93373--H9A	05216038	08/04/05
3	93374--H11A	05216039	08/04/05
4	93375--AV2	05216045	08/04/05
5	93376--AV	05216046	08/04/05
6	93377--AV10	05216047	08/04/05
7	93378--AV8	05216048	08/04/05
8	93379--AV6	05216049	08/04/05
9	93380--AV4	05216050	08/04/05
10	93381--H7B	05216051	08/04/05
11	93382--H9B	05216040	08/04/05
12	93383--H11B	05216041	08/04/05
13	93384--H5C	05216052	08/04/05
14	93385--H7C	05216042	08/04/05
15	93386--C	05216053	08/04/05
16	93387--DGE	05216054	08/04/05
17	93388--D	05216043	08/04/05
18	93389--G	05216055	08/04/05
19	93390--GD	05216056	08/04/05
20	93391--GGE	05216057	08/04/05
21	93392--EJ7	05216058	08/04/05
22	93393--CJ5	05216059	08/04/05
23	93394--HJ7	05216060	08/04/05
24	93395--CJ3	05216061	08/04/05
25	93396--HJ5	05216062	08/04/05
26	93397--CJ1	05216063	08/04/05
27	93398--CJ1R	05216064	08/04/05
28	93399--HJ2	05216065	08/04/05
29	93400--CJ1L	05216066	08/04/05
30	93401--EJ7G	05216067	08/04/05
31	93402--H13AP	05216068	08/04/05
32	93403--AP	05216069	08/04/05
33	93404--H13BP	05216070	08/04/05
34	93405--BP	05216071	08/04/05
35	93406--BHP	05216072	08/04/05

(5-318A-PAUL BROWN/ROOF - H7A)

THIS DWG PREPARED FROM COMPUTER INPUT (LOADS & DIMENSIONS) SUBMITTED BY TRUSS MFR.

Top chord 2x4 SP #2 Dense
Bot chord 2x4 SP #2 Dense
Webs 2x4 SP #3

#1 hip supports 7-0-0 jacks with no webs.

110 mph wind, 20.25 ft mean hgt, ASCE 7-98, CLOSED bldg, Located anywhere in roof, CAT II, EXP B, wind TC DL=2.8 psf, wind BC DL=2.2 psf.

Deflection meets L/360 live and L/240 total load.

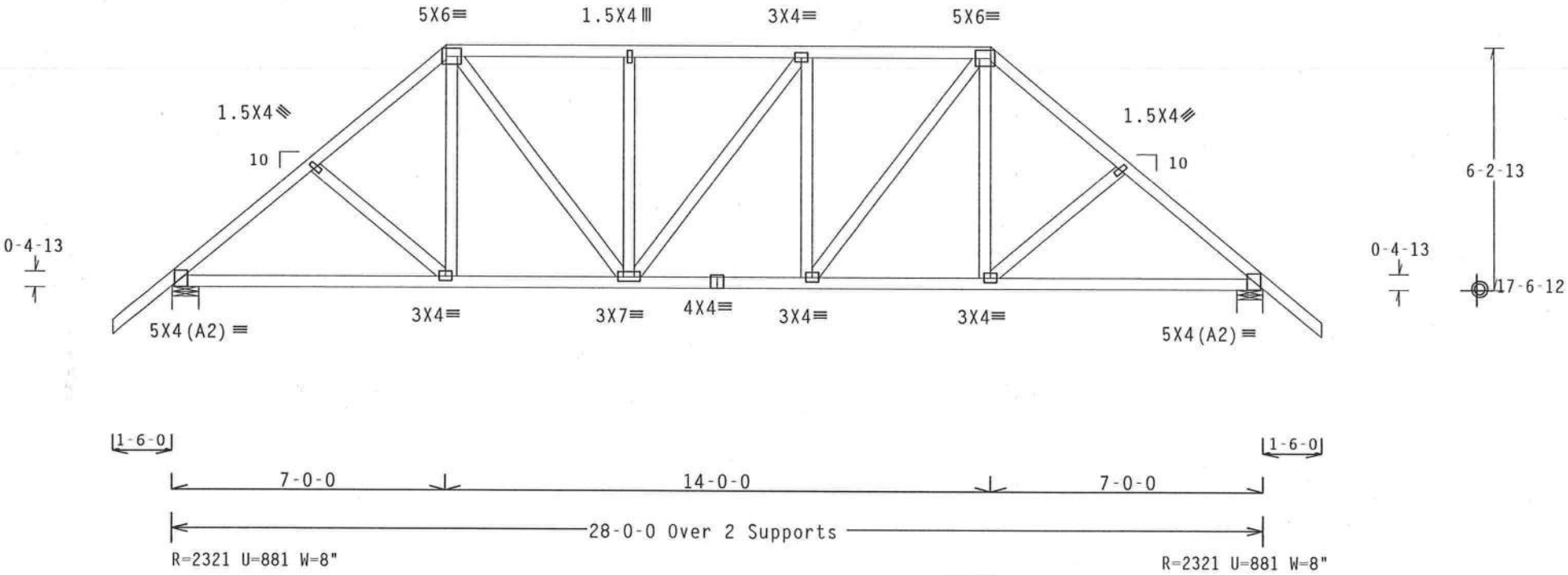

PLT TYP. Wave TPI Design Crit: TPI-1995(STD)/FBC 7.0.0.0.0.0.0.1 FL/-/3/-/-/R/- Scale =.25"/Ft.

ALPINE

Alpine Engineered Products, Inc
1950 Marley Drive
Haines City, FL 33844
FL Certificate of Authorization # 567

WARNING TRUSSES REQUIRE EXTREME CARE IN FABRICATION, HANDLING, SHIPPING, INSTALLING AND BRACING. REFER TO BCSI 1-03 (BUILDING COMPONENT SAFETY INFORMATION), PUBLISHED BY TPI (TRUSS PLATE INSTITUTE, 583 D'ONOFRIO DR., SUITE 200, MADISON, WI 53719) AND WTCA (WOOD TRUSS COUNCIL OF AMERICA, 6300 ENTERPRISE LN MADISON, WI 53719) FOR SAFETY PRACTICES PRIOR TO PERFORMING THESE FUNCTIONS. UNLESS OTHERWISE INDICATED TOP CHORD SHALL HAVE PROPERLY ATTACHED STRUCTURAL PANELS AND BOTTOM CHORD SHALL HAVE A PROPERLY ATTACHED RIGID CEILING.

IMPORTANT FURNISH A COPY OF THIS DESIGN TO THE INSTALLATION CONTRACTOR. ALPINE ENGINEERED PRODUCTS, INC. SHALL NOT BE RESPONSIBLE FOR ANY DEVIATION FROM THIS DESIGN; ANY FAILURE TO BUILD THE TRUSS IN CONFORMANCE WITH TPI; OR FABRICATING, HANDLING, SHIPPING, INSTALLING & BRACING OF TRUSSES. DESIGN CONFORMS WITH APPLICABLE PROVISIONS OF NDS (NATIONAL DESIGN SPEC. BY AF&PA) AND TPI. ALPINE CONNECTOR PLATES ARE MADE OF 20/18/16GA (W,H/S/K) ASTM A653 GRADE 40/60 (W, K/H,S) GALV. STEEL. APPLY PLATES TO EACH FACE OF TRUSS AND, UNLESS OTHERWISE LOCATED ON THIS DESIGN, POSITION PER DRAWINGS 160A-Z. ANY INSPECTION OF PLATES FOLLOWED BY (1) SHALL BE PER ANNEX A3 OF TPI1-2002 SEC.3. A SEAL ON THIS DRAWING INDICATES ACCEPTANCE OF PROFESSIONAL ENGINEERING RESPONSIBILITY SOLELY FOR THE TRUSS COMPONENT DESIGN SHOWN. THE SUITABILITY AND USE OF THIS COMPONENT FOR ANY BUILDING IS THE RESPONSIBILITY OF THE BUILDING DESIGNER PER ANSI/TPI 1 SEC. 2.

ARTHUR R. FISHER
LICENSE
No. 59087
AUG 04 2005
STATE OF FLORIDA
PROFESSIONAL ENGINEER

TC LL	20.0 PSF	REF	R487-- 93372
TC DL	10.0 PSF	DATE	08/04/05
BC DL	10.0 PSF	DRW	HCUSR487 05216044
BC LL	0.0 PSF	HC-ENG	JB/AF
TOT.LD.	40.0 PSF	SEQN-	150731
DUR.FAC.	1.25		
SPACING	24.0"	JREF-	1SPC487_Z01

(5-318A-PAUL BROWN/ROOF - H9A)

THIS DWG PREPARED FROM COMPUTER INPUT (LOADS & DIMENSIONS) SUBMITTED BY TRUSS MFR.

Top chord 2x4 SP #2 Dense
Bot chord 2x4 SP #2 Dense
Webs 2x4 SP #3

Deflection meets L/360 live and L/240 total load.

110 mph wind, 21.09 ft mean hgt, ASCE 7-98, CLOSED bldg, not located within 4.50 ft from roof edge, CAT II, EXP B, wind TC DL=2.8 psf, wind BC DL=2.2 psf.

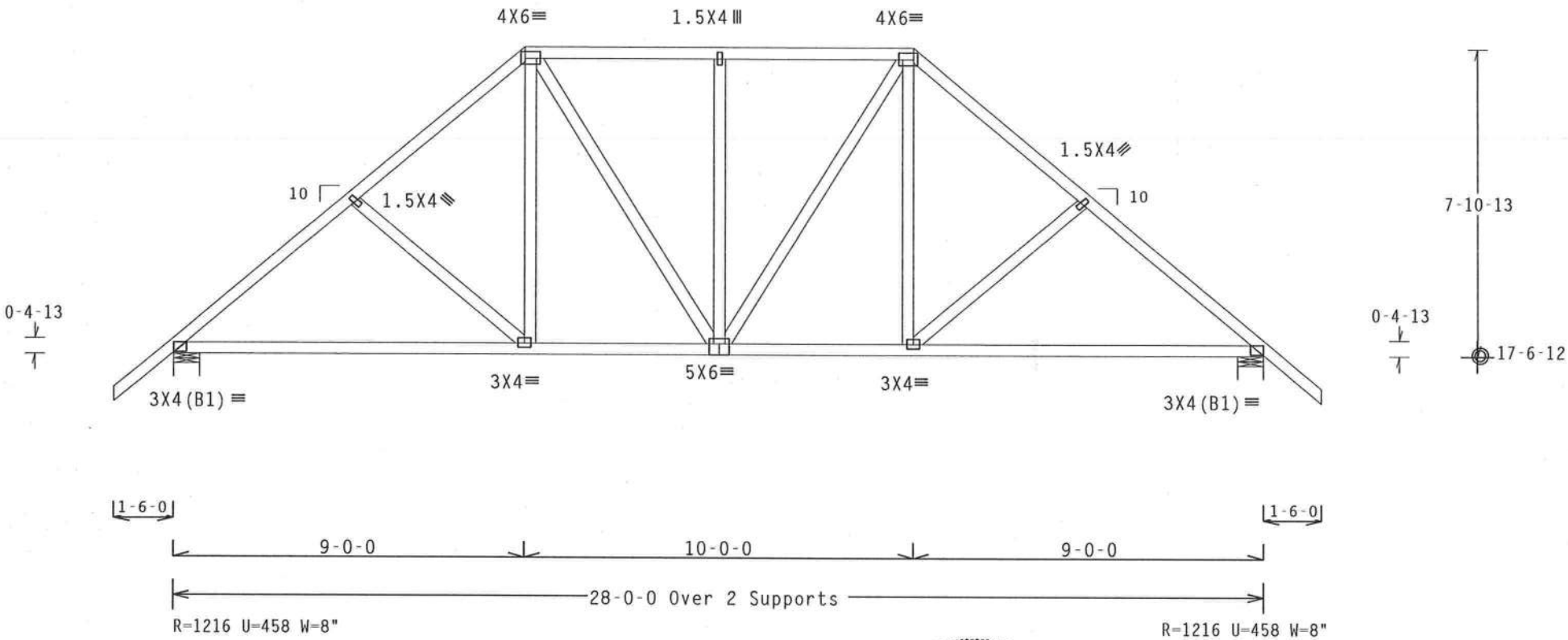

PLT TYP. Wave TPI | Design Crit: TPI-1995(STD)/FBC | 7.0.4805.16 | QTY 1 | FL/-/3/-/-/R/- | Scale =.25"/Ft.

ALPINE

Alpine Engineered Products, Inc
1950 Marley Drive
Haines City, FL 33844
FL Certificate of Authorization # 567

WARNING TRUSSES REQUIRE EXTREME CARE IN FABRICATION, HANDLING, SHIPPING, INSTALLING AND BRACING. REFER TO BCSI 1-03 (BUILDING COMPONENT SAFETY INFORMATION), PUBLISHED BY TPI (TRUSS PLATE INSTITUTE, 583 D'ONOFRIO DR., SUITE 200, MADISON, WI 53719) AND WTCA (WOOD TRUSS COUNCIL OF AMERICA, 6300 ENTERPRISE LN, MADISON, WI 53719) FOR SAFETY PRACTICES PRIOR TO PERFORMING THESE FUNCTIONS. UNLESS OTHERWISE INDICATED TOP CHORD SHALL HAVE PROPERLY ATTACHED STRUCTURAL PANELS AND BOTTOM CHORD SHALL HAVE A PROPERLY ATTACHED RIGID CEILING.

IMPORTANT FURNISH A COPY OF THIS DESIGN TO THE INSTALLATION CONTRACTOR. ALPINE ENGINEERED PRODUCTS, INC. SHALL NOT BE RESPONSIBLE FOR ANY DEVIATION FROM THIS DESIGN; ANY FAILURE TO BUILD THE TRUSS IN CONFORMANCE WITH TPI; OR FABRICATING, HANDLING, SHIPPING, INSTALLING & BRACING OF TRUSSES. DESIGN CONFORMS WITH APPLICABLE PROVISIONS OF NDS (NATIONAL DESIGN SPEC. BY AF&PA) AND TPI. ALPINE CONNECTOR PLATES ARE MADE OF 20/18/16GA (W,H/S/K) ASTM A653 GRADE 40/60 (W, K/H,S) GALV. STEEL. APPLY PLATES TO EACH FACE OF TRUSS AND, UNLESS OTHERWISE LOCATED ON THIS DESIGN, POSITION PER DRAWINGS 160A-Z. ANY INSPECTION OF PLATES FOLLOWED BY (1) SHALL BE PER ANNEX A3 OF TPI1-2002 SEC.3. A SEAL ON THIS DRAWING INDICATES ACCEPTANCE OF PROFESSIONAL ENGINEERING RESPONSIBILITY SOLELY FOR THE TRUSS COMPONENT DESIGN SHOWN. THE SUITABILITY AND USE OF THIS COMPONENT FOR ANY BUILDING IS THE RESPONSIBILITY OF THE BUILDING DESIGNER PER ANSI/TPI 1 SEC. 2.

ARTHUR R. FISHER LICENSE No. 59687 STATE OF FLORIDA PROFESSIONAL ENGINEER
Aug 04 '05

TC LL	20.0 PSF	REF R487-- 93373
TC DL	10.0 PSF	DATE 08/04/05
BC DL	10.0 PSF	DRW HCUSR487 05216038
BC LL	0.0 PSF	HC-ENG JB/AF *
TOT.LD.	40.0 PSF	SEQN- 150736
DUR.FAC.	1.25	
SPACING	24.0"	JREF- 1SPC487_Z01

(5-318A-PAUL BROWN/ROOF - H11A)

Top chord 2x4 SP #2 Dense
Bot chord 2x4 SP #2 Dense
Webs 2x4 SP #3

Deflection meets L/360 live and L/240 total load.

110 mph wind, 21.92 ft mean hgt, ASCE 7-98, CLOSED bldg, not located within 4.50 ft from roof edge, CAT II, EXP B, wind TC DL=2.8 psf, wind BC DL=2.2 psf.

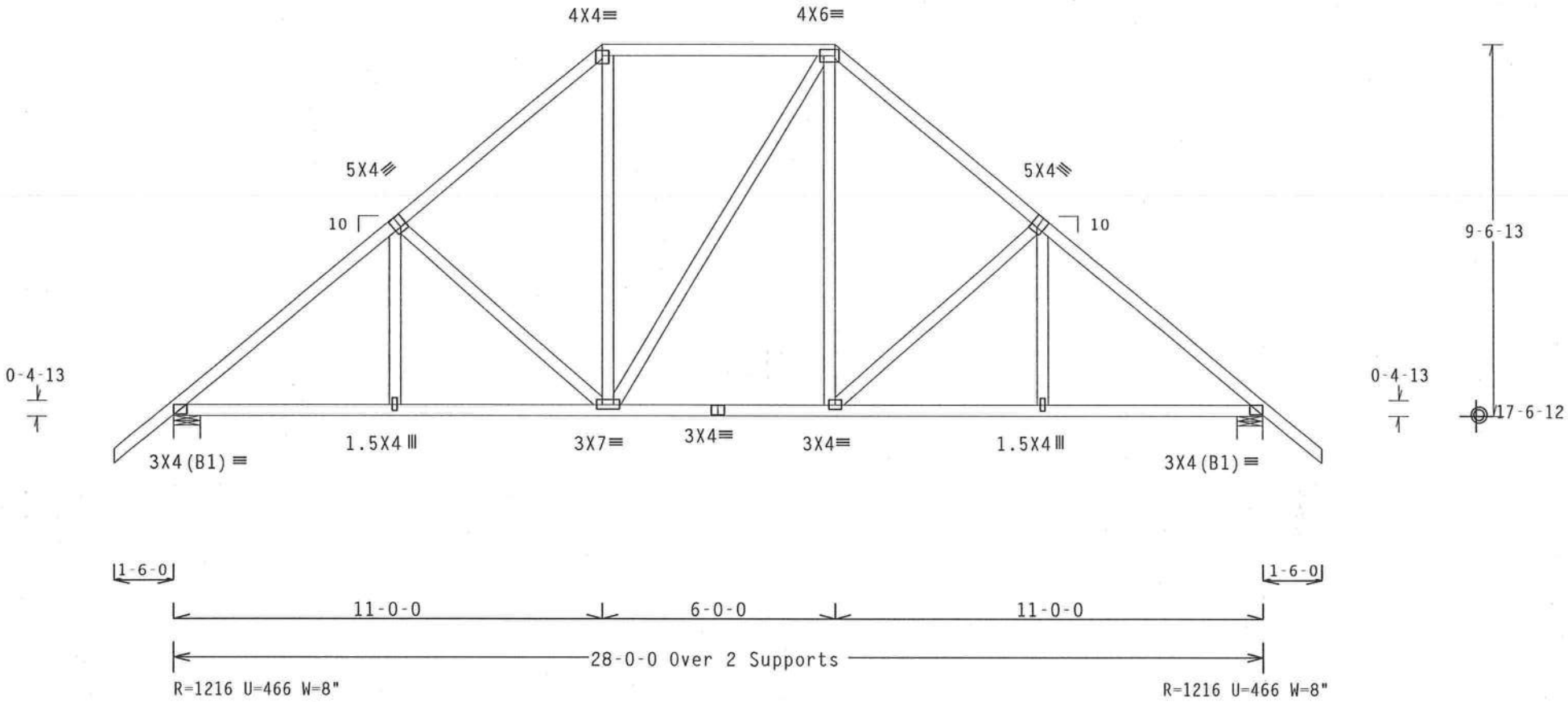

PLT TYP. Wave TPI | Design Crit: TPI-1995(STD)/FBC | 7.04.0805.1004 | 3 | FL/-/3/-/-/R/- | Scale =.25"/Ft.

ALPINE
Alpine Engineered Products, Inc
1950 Marley Drive
Haines City, FL 33844
FL Certificate of Authorization # 567

WARNING TRUSSES REQUIRE EXTREME CARE IN FABRICATION, HANDLING, SHIPPING, INSTALLING AND BRACING. REFER TO BCSI 1-03 (BUILDING COMPONENT SAFETY INFORMATION), PUBLISHED BY TPI (TRUSS PLATE INSTITUTE, 583 D'ONOFRIO DR., SUITE 200, MADISON, WI 53719) AND WTCA (WOOD TRUSS COUNCIL OF AMERICA, 6300 ENTERPRISE LN, MADISON, WI 53719) FOR SAFETY PRACTICES PRIOR TO PERFORMING THESE FUNCTIONS. UNLESS OTHERWISE INDICATED, TOP CHORD SHALL HAVE PROPERLY ATTACHED STRUCTURAL PANELS AND BOTTOM CHORD SHALL HAVE A PROPERLY ATTACHED RIGID CEILING.

IMPORTANT FURNISH A COPY OF THIS DESIGN TO THE INSTALLATION CONTRACTOR. ALPINE ENGINEERED PRODUCTS, INC. SHALL NOT BE RESPONSIBLE FOR ANY DEVIATION FROM THIS DESIGN; ANY FAILURE TO BUILD THE TRUSS IN CONFORMANCE WITH TPI1; OR FABRICATING, HANDLING, SHIPPING, INSTALLING & BRACING OF TRUSSES. DESIGN CONFORMS WITH APPLICABLE PROVISIONS OF NDS (NATIONAL DESIGN SPEC, BY AF&PA) AND TPI. ALPINE CONNECTOR PLATES ARE MADE OF 20/18/16GA (W,H/S/K) ASTM A653 GRADE 40/60 (W, K/H,S) GALV. STEEL. APPLY PLATES TO EACH FACE OF TRUSS AND, UNLESS OTHERWISE LOCATED ON THIS DESIGN, POSITION PER DRAWINGS 160A-Z. ANY INSPECTION OF PLATES FOLLOWED BY (1) SHALL BE PER ANNEX A3 OF TPI1-2002 SEC.3. A SEAL ON THIS DRAWING INDICATES ACCEPTANCE OF PROFESSIONAL ENGINEERING RESPONSIBILITY SOLELY FOR THE TRUSS COMPONENT DESIGN SHOWN. THE SUITABILITY AND USE OF THIS COMPONENT FOR ANY BUILDING IS THE RESPONSIBILITY OF THE BUILDING DESIGNER PER ANSI/TPI 1 SEC. 2.

ARTHUR R. FISHER LICENSE No. 50687 STATE OF FLORIDA PROFESSIONAL ENGINEER
Aug 04 2005

TC LL	20.0 PSF	REF R487-- 93374
TC DL	10.0 PSF	DATE 08/04/05
BC DL	10.0 PSF	DRW HCUSR487 05216039
BC LL	0.0 PSF	HC-ENG JB/AF *
TOT.LD.	40.0 PSF	SEQN- 150762
DUR.FAC.	1.25	
SPACING	24.0"	JREF- 1SPC487_Z01

(5-318A-PAUL BROWN/ROOF - AV2)

Top chord 2x4 SP #2 Dense
Bot chord 2x4 SP #2 Dense :B2 2x10 SP SS:
Webs 2x4 SP #3
:Lt Slider 2x4 SP #3: BLOCK LENGTH = 1.886'

110 mph wind, 22.82 ft mean hgt, ASCE 7-98, CLOSED bldg, not located within 4.50 ft from roof edge, CAT II, EXP B, wind TC DL=2.8 psf, wind BC DL=2.2 psf.

(**) Plate relocated as shown.

SPECIAL LOADS
------(LUMBER DUR.FAC.=1.25 / PLATE DUR.FAC.=1.25)
TC - From 60 PLF at -1.50 to 60 PLF at 29.50
BC - From 4 PLF at -1.50 to 4 PLF at 0.00
BC - From 20 PLF at 0.00 to 20 PLF at 28.00
BC - From 4 PLF at 28.00 to 4 PLF at 29.50
PLB- -10 LB Conc. Load at (26.00,18.16)

Calculated horizontal deflection is 0.24" due to live load and 0.23" due to dead load.

4X6≡ Deflection meets L/360 live and L/240 total load.

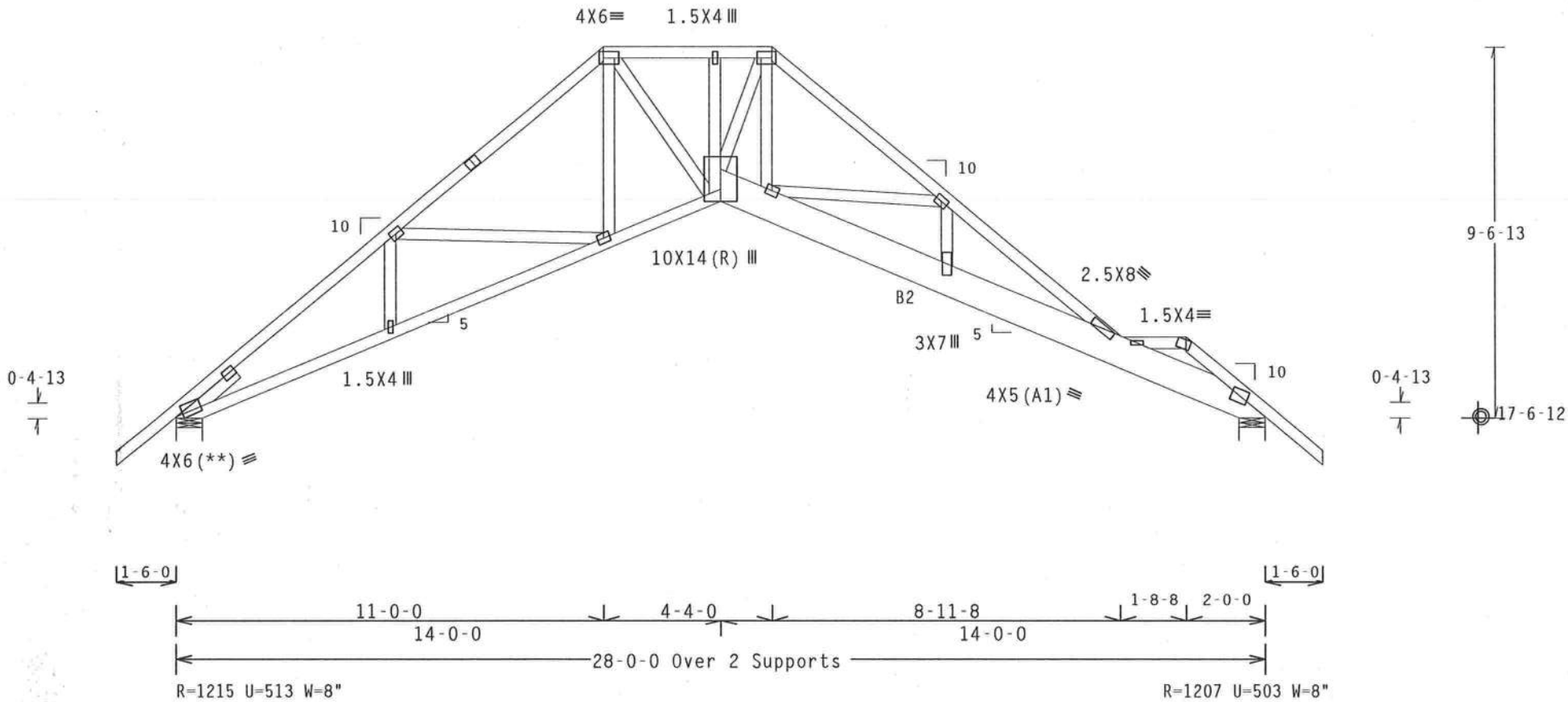

Note: All Plates Are 3X4 Except As Shown.

PLT TYP. Wave TPI | Design Crit: TPI-1995(STD)/FBC | 7.04 0805 | FL/-/3/-/-/R/- | Scale =.25"/Ft.

ALPINE
Alpine Engineered Products, Inc
1950 Marley Drive
Haines City, FL 33844
FL Certificate of Authorization # 567

WARNING TRUSSES REQUIRE EXTREME CARE IN FABRICATION, HANDLING, SHIPPING, INSTALLING AND BRACING. REFER TO BCSI 1-03 (BUILDING COMPONENT SAFETY INFORMATION), PUBLISHED BY TPI (TRUSS PLATE INSTITUTE, 583 D'ONOFRIO DR., SUITE 200, MADISON, WI 53719) AND WTCA (WOOD TRUSS COUNCIL OF AMERICA, 6300 ENTERPRISE LN, MADISON, WI 53719) FOR SAFETY PRACTICES PRIOR TO PERFORMING THESE FUNCTIONS. UNLESS OTHERWISE INDICATED, TOP CHORD SHALL HAVE PROPERLY ATTACHED STRUCTURAL PANELS AND BOTTOM CHORD SHALL HAVE A PROPERLY ATTACHED RIGID CEILING.

IMPORTANT FURNISH A COPY OF THIS DESIGN TO THE INSTALLATION CONTRACTOR. ALPINE ENGINEERED PRODUCTS, INC. SHALL NOT BE RESPONSIBLE FOR ANY DEVIATION FROM THIS DESIGN; ANY FAILURE TO BUILD THE TRUSS IN CONFORMANCE WITH TPI: OR FABRICATING, HANDLING, SHIPPING, INSTALLING & BRACING OF TRUSSES. DESIGN CONFORMS WITH APPLICABLE PROVISIONS OF NDS (NATIONAL DESIGN SPEC. BY AF&PA) AND TPI. ALPINE CONNECTOR PLATES ARE MADE OF 20/18/16GA (W,H/S/K) ASTM A653 GRADE 40/60 (W, K/H,S) GALV. STEEL. APPLY PLATES TO EACH FACE OF TRUSS AND, UNLESS OTHERWISE LOCATED ON THIS DESIGN, POSITION PER DRAWINGS 160A-Z; ANY INSPECTION OF PLATES FOLLOWED BY (1) SHALL BE PER ANNEX A3 OF TPI1-2002 SEC.3. A SEAL ON THIS DRAWING INDICATES ACCEPTANCE OF PROFESSIONAL ENGINEERING RESPONSIBILITY SOLELY FOR THE TRUSS COMPONENT DESIGN SHOWN. THE SUITABILITY AND USE OF THIS COMPONENT FOR ANY BUILDING IS THE RESPONSIBILITY OF THE BUILDING DESIGNER PER ANSI/TPI 1 SEC. 2.

ARTHUR R. FISHER LICENSE No.59687 Aug 04 05 STATE OF FLORIDA PROFESSIONAL ENGINEER

TC LL	20.0 PSF	REF R487-- 93375
TC DL	10.0 PSF	DATE 08/04/05
BC DL	10.0 PSF	DRW HCUSR487 05216045
BC LL	0.0 PSF	HC-ENG JB/AF
TOT.LD.	40.0 PSF	SEQN- 150957
DUR.FAC.	1.25	
SPACING	24.0"	JREF- 1SPC487_Z01

(5-318A-PAUL BROWN/ROOF - AV)

THIS DWG PREPARED FROM COMPUTER INPUT (LOADS & DIMENSIONS) SUBMITTED BY TRUSS MFR.

Top chord 2x4 SP #2 Dense
Bot chord 2x4 SP #2 Dense
Webs 2x4 SP #3
:Lt Slider 2x4 SP #3: BLOCK LENGTH = 1.886'
:Rt Slider 2x4 SP #3: BLOCK LENGTH = 1.886'

Calculated horizontal deflection is 0.14" due to live load and 0.13" due to dead load.

(**) Plate relocated as shown.

110 mph wind, 21.92 ft mean hgt, ASCE 7-98, CLOSED bldg, not located within 4.50 ft from roof edge, CAT II, EXP B, wind TC DL=2.8 psf, wind BC DL=2.2 psf.

Deflection meets L/360 live and L/240 total load.

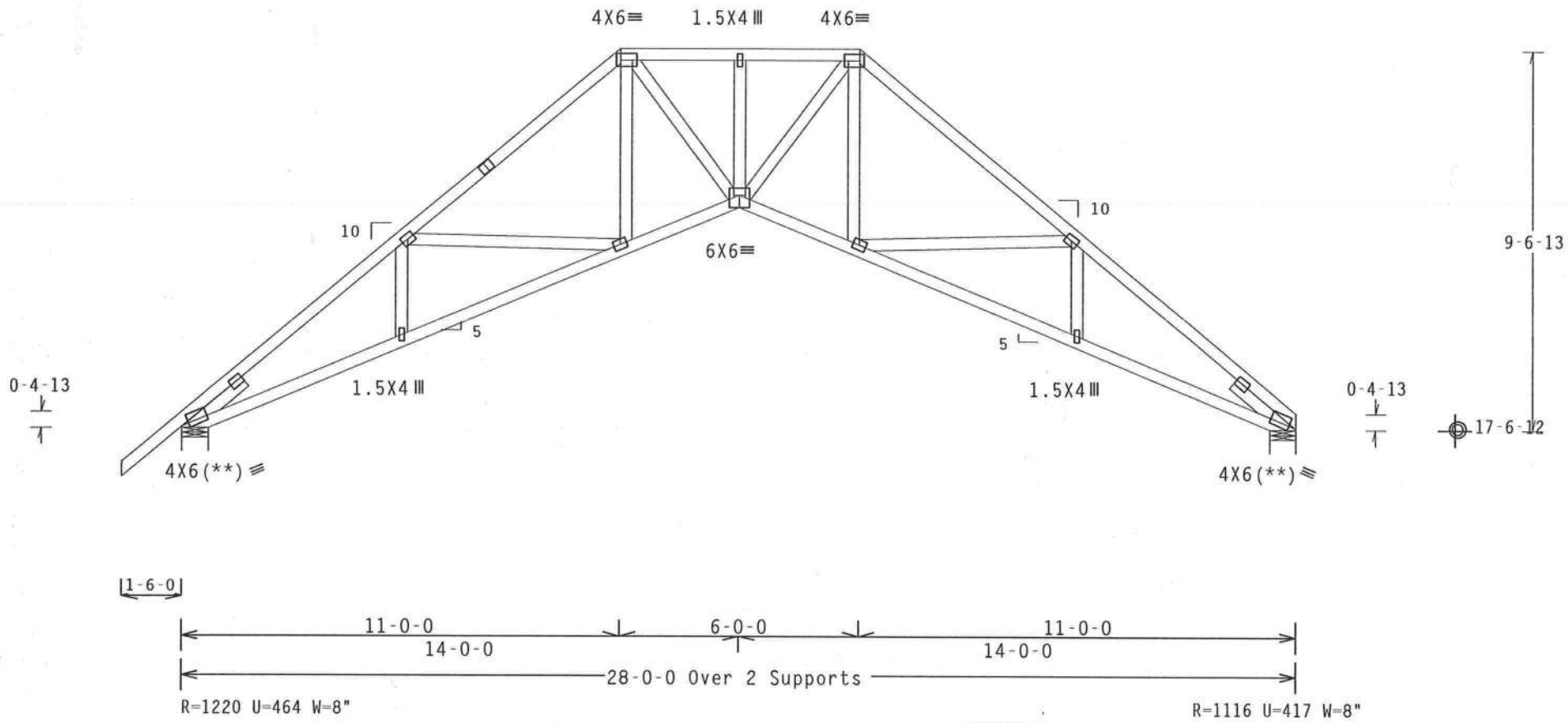

Note: All Plates Are 3X4 Except As Shown.

PLT TYP. Wave TPI Design Crit: TPI-1995(STD)/FBC 7.0.[illegible]5.16 [illegible]4 FL/-/3/-/-/R/- Scale =.25"/Ft.

ALPINE

Alpine Engineered Products, Inc
1950 Marley Drive
Haines City, FL 33844
FL Certificate of Authorization # 567

WARNING TRUSSES REQUIRE EXTREME CARE IN FABRICATION, HANDLING, SHIPPING, INSTALLING AND BRACING. REFER TO BCSI 1-03 (BUILDING COMPONENT SAFETY INFORMATION), PUBLISHED BY TPI (TRUSS PLATE INSTITUTE, 583 D'ONOFRIO DR., SUITE 200, MADISON, WI 53719) AND WTCA (WOOD TRUSS COUNCIL OF AMERICA, 6300 ENTERPRISE LN, MADISON, WI 53719) FOR SAFETY PRACTICES PRIOR TO PERFORMING THESE FUNCTIONS. UNLESS OTHERWISE INDICATED TOP CHORD SHALL HAVE PROPERLY ATTACHED STRUCTURAL PANELS AND BOTTOM CHORD SHALL HAVE A PROPERLY ATTACHED RIGID CEILING.

IMPORTANT FURNISH A COPY OF THIS DESIGN TO THE INSTALLATION CONTRACTOR. ALPINE ENGINEERED PRODUCTS, INC. SHALL NOT BE RESPONSIBLE FOR ANY DEVIATION FROM THIS DESIGN; ANY FAILURE TO BUILD THE TRUSS IN CONFORMANCE WITH TPI; OR FABRICATING, HANDLING, SHIPPING, INSTALLING & BRACING OF TRUSSES. DESIGN CONFORMS WITH APPLICABLE PROVISIONS OF NDS (NATIONAL DESIGN SPEC, BY AF&PA) AND TPI. ALPINE CONNECTOR PLATES ARE MADE OF 20/18/16GA (W,H/S/K) ASTM A653 GRADE 40/60 (W, K/H,S) GALV. STEEL. APPLY PLATES TO EACH FACE OF TRUSS AND, UNLESS OTHERWISE LOCATED ON THIS DESIGN, POSITION PER DRAWINGS 160A-Z. ANY INSPECTION OF PLATES FOLLOWED BY (1) SHALL BE PER ANNEX A3 OF TPI1-2002 SEC.3. A SEAL ON THIS DRAWING INDICATES ACCEPTANCE OF PROFESSIONAL ENGINEERING RESPONSIBILITY SOLELY FOR THE TRUSS COMPONENT DESIGN SHOWN. THE SUITABILITY AND USE OF THIS COMPONENT FOR ANY BUILDING IS THE RESPONSIBILITY OF THE BUILDING DESIGNER PER ANSI/TPI 1 SEC. 2.

ARTHUR R. FISHER LICENSE No. 59687 STATE OF FLORIDA PROFESSIONAL ENGINEER
Aug 04 '05

TC LL	20.0 PSF	REF R487-- 93376
TC DL	10.0 PSF	DATE 08/04/05
BC DL	10.0 PSF	DRW HCUSR487 05216046
BC LL	0.0 PSF	HC-ENG JB/AF
TOT.LD.	40.0 PSF	SEQN- 150856
DUR.FAC.	1.25	
SPACING	24.0"	JREF- 1SPC487_Z01

Top chord 2x4 SP #2 Dense
Bot chord 2x4 SP #2 Dense
Webs 2x4 SP #3
:Lt Slider 2x4 SP #3: BLOCK LENGTH = 1.886'
:Rt Slider 2x4 SP #3: BLOCK LENGTH = 1.886'

Calculated horizontal deflection is 0.14" due to live load and 0.14" due to dead load.

(**) Plate relocated as shown.

110 mph wind, 21.92 ft mean hgt, ASCE 7-98, CLOSED bldg, not located within 4.50 ft from roof edge, CAT II, EXP B, wind TC DL=2.8 psf, wind BC DL=2.2 psf.

Deflection meets L/360 live and L/240 total load.

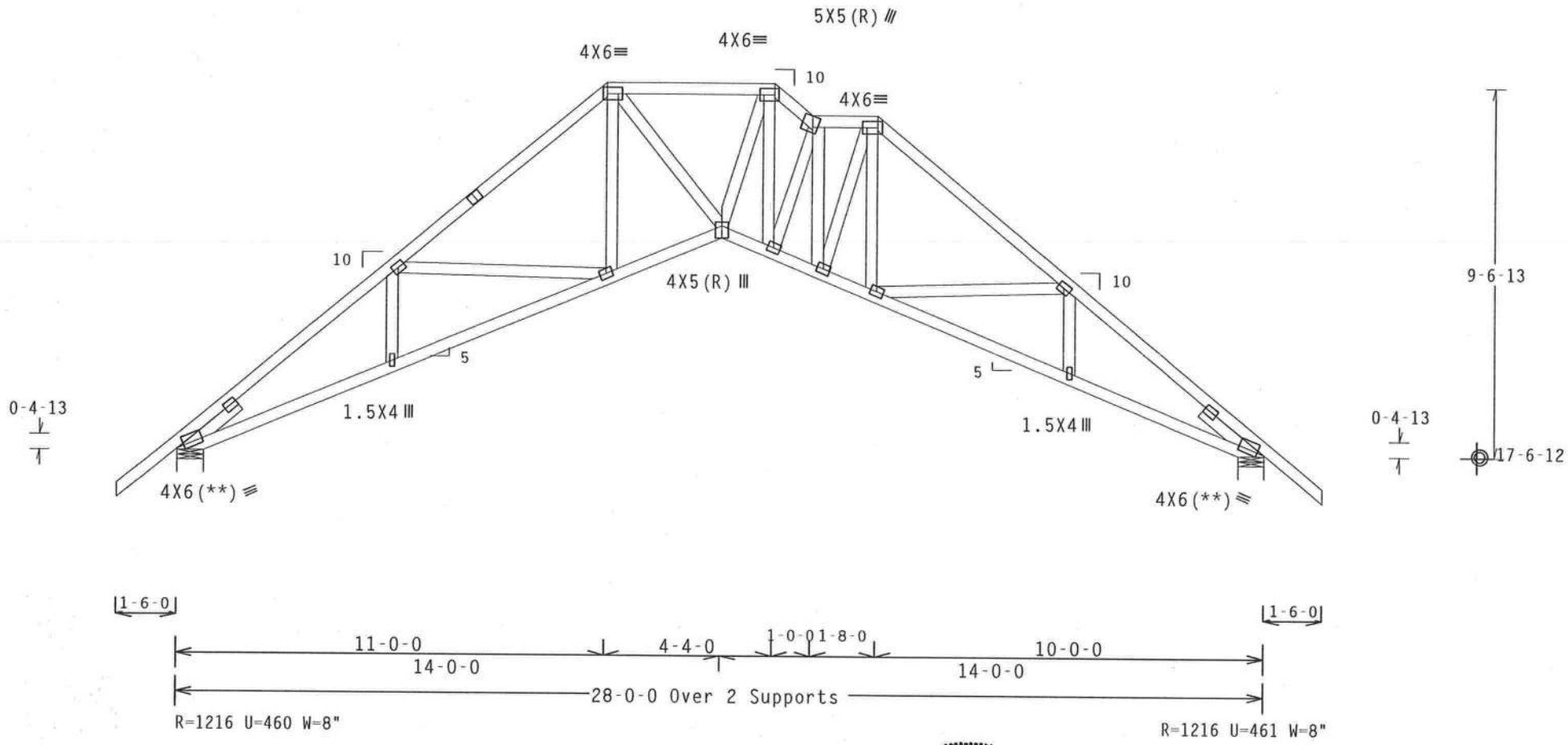

Note: All Plates Are 3X4 Except As Shown.

PLT TYP. Wave TPI Design Crit: TPI-1995(STD)/FBC 7.01.0805.16 1 FL/-/3/-/-/R/- Scale =.25"/Ft.

ALPINE
Alpine Engineered Products, Inc.
1950 Marley Drive
Haines City, FL 33844
FL Certificate of Authorization # 567

WARNING TRUSSES REQUIRE EXTREME CARE IN FABRICATION, HANDLING, SHIPPING, INSTALLING AND BRACING. REFER TO BCSI 1-03 (BUILDING COMPONENT SAFETY INFORMATION), PUBLISHED BY TPI (TRUSS PLATE INSTITUTE, 583 D'ONOFRIO DR., SUITE 200, MADISON, WI 53719) AND WTCA (WOOD TRUSS COUNCIL OF AMERICA, 6300 ENTERPRISE LN, MADISON, WI 53719) FOR SAFETY PRACTICES PRIOR TO PERFORMING THESE FUNCTIONS. UNLESS OTHERWISE INDICATED, TOP CHORD SHALL HAVE PROPERLY ATTACHED STRUCTURAL PANELS AND BOTTOM CHORD SHALL HAVE A PROPERLY ATTACHED RIGID CEILING.

IMPORTANTFURNISH A COPY OF THIS DESIGN TO THE INSTALLATION CONTRACTOR. ALPINE ENGINEERED PRODUCTS, INC. SHALL NOT BE RESPONSIBLE FOR ANY DEVIATION FROM THIS DESIGN; ANY FAILURE TO BUILD THE TRUSS IN CONFORMANCE WITH TPI; OR FABRICATING, HANDLING, SHIPPING, INSTALLING & BRACING OF TRUSSES. DESIGN CONFORMS WITH APPLICABLE PROVISIONS OF NDS (NATIONAL DESIGN SPEC, BY AF&PA) AND TPI. ALPINE CONNECTOR PLATES ARE MADE OF 20/18/16GA (W,H/S/K) ASTM A653 GRADE 40/60 (W, K/H,S) GALV. STEEL. APPLY PLATES TO EACH FACE OF TRUSS AND, UNLESS OTHERWISE LOCATED ON THIS DESIGN, POSITION PER DRAWINGS 160A-Z. ANY INSPECTION OF PLATES FOLLOWED BY (1) SHALL BE PER ANNEX A3 OF TPI1-2002 SEC.3. A SEAL ON THIS DRAWING INDICATES ACCEPTANCE OF PROFESSIONAL ENGINEERING RESPONSIBILITY SOLELY FOR THE TRUSS COMPONENT DESIGN SHOWN. THE SUITABILITY AND USE OF THIS COMPONENT FOR ANY BUILDING IS THE RESPONSIBILITY OF THE BUILDING DESIGNER PER ANSI/TPI 1 SEC. 2.

ARTHUR R. FISHER LICENSE No. 59687 Aug 04 '05 STATE OF FLORIDA PROFESSIONAL ENGINEER

TC LL	20.0 PSF	REF R487-- 93377
TC DL	10.0 PSF	DATE 08/04/05
BC DL	10.0 PSF	DRW HCUSR487 05216047
BC LL	0.0 PSF	HC-ENG JB/AF
TOT.LD.	40.0 PSF	SEQN- 150868
DUR.FAC.	1.25	
SPACING	24.0"	JREF- 1SPC487_Z01

THIS DWG PREPARED FROM COMPUTER INPUT (LOADS & DIMENSIONS) SUBMITTED BY TRUSS MFR.

Top chord 2x4 SP #2 Dense
Bot chord 2x4 SP #2 Dense
Webs 2x4 SP #3
:Lt Slider 2x4 SP #3: BLOCK LENGTH = 1.886'
:Rt Slider 2x4 SP #3: BLOCK LENGTH = 1.886'

Calculated horizontal deflection is 0.15" due to live load and 0.15" due to dead load.

110 mph wind, 21.92 ft mean hgt, ASCE 7-98, CLOSED bldg, not located within 4.50 ft from roof edge, CAT II, EXP B, wind TC DL=2.8 psf, wind BC DL=2.2 psf.

Deflection meets L/360 live and L/240 total load.

(**) Plate relocated as shown.

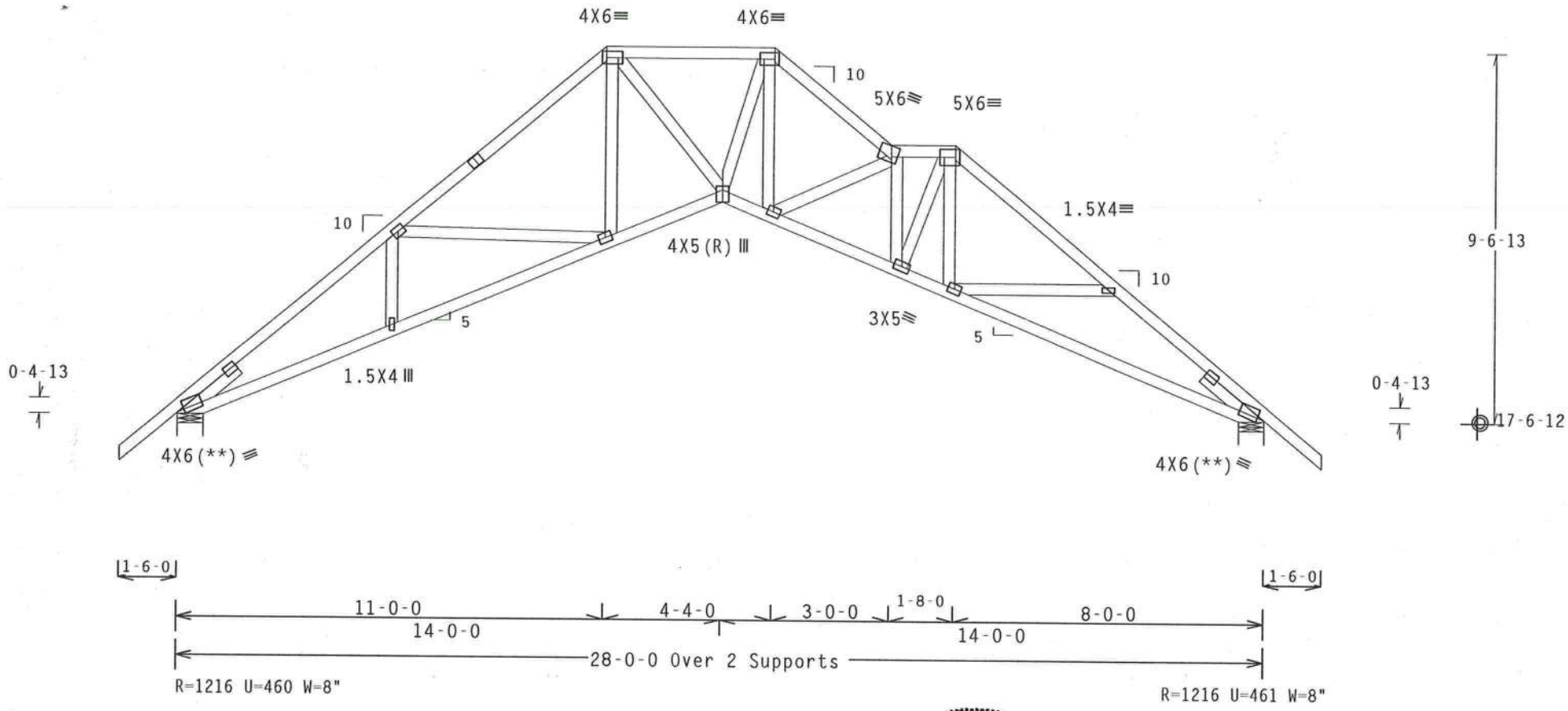

Note: All Plates Are 3X4 Except As Shown.

PLT TYP. Wave TPI | Design Crit: TPI-1995(STD)/FBC | 7.0.[illegible] | FL/-/3/-/-/R/- | Scale =.25"/Ft.

ALPINE
Alpine Engineered Products, Inc.
1950 Marley Drive
Haines City, FL 33844
FL Certificate of Authorization # 567

WARNING TRUSSES REQUIRE EXTREME CARE IN FABRICATION, HANDLING, SHIPPING, INSTALLING AND BRACING. REFER TO BCSI 1-03 (BUILDING COMPONENT SAFETY INFORMATION), PUBLISHED BY TPI (TRUSS PLATE INSTITUTE, 583 D'ONOFRIO DR., SUITE 200, MADISON, WI 53719) AND WTCA (WOOD TRUSS COUNCIL OF AMERICA, 6300 ENTERPRISE LN, MADISON, WI 53719) FOR SAFETY PRACTICES PRIOR TO PERFORMING THESE FUNCTIONS. UNLESS OTHERWISE INDICATED, TOP CHORD SHALL HAVE PROPERLY ATTACHED STRUCTURAL PANELS AND BOTTOM CHORD SHALL HAVE A PROPERLY ATTACHED RIGID CEILING.

IMPORTANT FURNISH A COPY OF THIS DESIGN TO THE INSTALLATION CONTRACTOR. ALPINE ENGINEERED PRODUCTS, INC. SHALL NOT BE RESPONSIBLE FOR ANY DEVIATION FROM THIS DESIGN; ANY FAILURE TO BUILD THE TRUSS IN CONFORMANCE WITH TPI; OR FABRICATING, HANDLING, SHIPPING, INSTALLING & BRACING OF TRUSSES. DESIGN CONFORMS WITH APPLICABLE PROVISIONS OF NDS (NATIONAL DESIGN SPEC. BY AF&PA) AND TPI. ALPINE CONNECTOR PLATES ARE MADE OF 20/18/16GA (W,H/S/K) ASTM A653 GRADE 40/60 (W, K/H,S) GALV. STEEL. APPLY PLATES TO EACH FACE OF TRUSS AND, UNLESS OTHERWISE LOCATED ON THIS DESIGN, POSITION PER DRAWINGS 160A-Z. ANY INSPECTION OF PLATES FOLLOWED BY (1) SHALL BE PER ANNEX A3 OF TPI1-2002 SEC.3. A SEAL ON THIS DRAWING INDICATES ACCEPTANCE OF PROFESSIONAL ENGINEERING RESPONSIBILITY SOLELY FOR THE TRUSS COMPONENT DESIGN SHOWN. THE SUITABILITY AND USE OF THIS COMPONENT FOR ANY BUILDING IS THE RESPONSIBILITY OF THE BUILDING DESIGNER PER ANSI/TPI 1 SEC. 2.

ARTHUR R. FISHER LICENSE No.59687 AUG 04 '05 STATE OF FLORIDA PROFESSIONAL ENGINEER

TC LL	20.0 PSF	REF R487-- 93378
TC DL	10.0 PSF	DATE 08/04/05
BC DL	10.0 PSF	DRW HCUSR487 05216048
BC LL	0.0 PSF	HC-ENG JB/AF
TOT.LD.	40.0 PSF	SEQN- 150881
DUR.FAC.	1.25	
SPACING	24.0"	JREF- 1SPC487_Z01

(5-318A-PAUL BROWN/ROOF - AV6)

THIS DWG PREPARED FROM COMPUTER INPUT (LOADS & DIMENSIONS) SUBMITTED BY TRUSS MFR.

Top chord 2x4 SP #2 Dense
Bot chord 2x4 SP #2 Dense
Webs 2x4 SP #3
:Lt Slider 2x4 SP #3: BLOCK LENGTH = 1.886'
:Rt Slider 2x4 SP #3: BLOCK LENGTH = 1.939'

Calculated horizontal deflection is 0.16" due to live load and 0.16" due to dead load.

110 mph wind, 21.92 ft mean hgt, ASCE 7-98, CLOSED bldg, not located within 4.50 ft from roof edge, CAT II, EXP B, wind TC DL=2.8 psf, wind BC DL=2.2 psf.

Deflection meets L/360 live and L/240 total load.

(**) Plate relocated as shown.

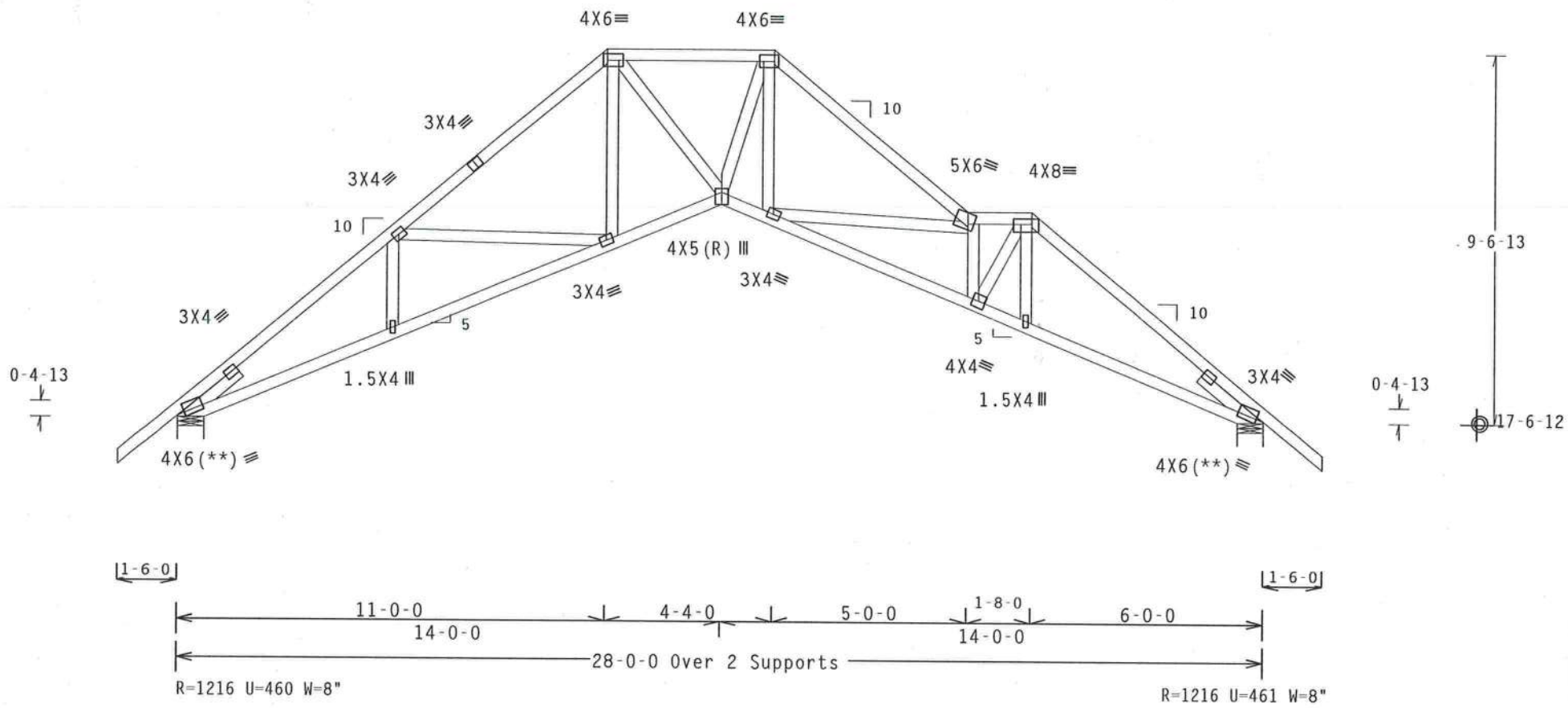

PLT TYP. Wave TPI | Design Crit: TPI-1995(STD)/FBC | 7.04.0805.10 | FL/-/3/-/-/R/- | Scale =.25"/Ft.

ALPINE
Alpine Engineered Products, Inc.
1950 Marley Drive
Haines City, FL 33844
FL Certificate of Authorization # 567

WARNING TRUSSES REQUIRE EXTREME CARE IN FABRICATION, HANDLING, SHIPPING, INSTALLING AND BRACING. REFER TO BCSI 1-03 (BUILDING COMPONENT SAFETY INFORMATION), PUBLISHED BY TPI (TRUSS PLATE INSTITUTE, 583 D'ONOFRIO DR., SUITE 200, MADISON, WI 53719) AND WTCA (WOOD TRUSS COUNCIL OF AMERICA, 6300 ENTERPRISE LN, MADISON, WI 53719) FOR SAFETY PRACTICES PRIOR TO PERFORMING THESE FUNCTIONS. UNLESS OTHERWISE INDICATED, TOP CHORD SHALL HAVE PROPERLY ATTACHED STRUCTURAL PANELS AND BOTTOM CHORD SHALL HAVE A PROPERLY ATTACHED RIGID CEILING.

IMPORTANTFURNISH A COPY OF THIS DESIGN TO THE INSTALLATION CONTRACTOR. ALPINE ENGINEERED PRODUCTS, INC. SHALL NOT BE RESPONSIBLE FOR ANY DEVIATION FROM THIS DESIGN; ANY FAILURE TO BUILD THE TRUSS IN CONFORMANCE WITH TPI; OR FABRICATING, HANDLING, SHIPPING, INSTALLING & BRACING OF TRUSSES. DESIGN CONFORMS WITH APPLICABLE PROVISIONS OF NDS (NATIONAL DESIGN SPEC, BY AF&PA) AND TPI. ALPINE CONNECTOR PLATES ARE MADE OF 20/18/16GA (W,H/S/K) ASTM A653 GRADE 40/60 (W, K/H,S) GALV. STEEL. APPLY PLATES TO EACH FACE OF TRUSS AND, UNLESS OTHERWISE LOCATED ON THIS DESIGN, POSITION PER DRAWINGS 160A-Z. ANY INSPECTION OF PLATES FOLLOWED BY (1) SHALL BE PER ANNEX A3 OF TPI1-2002 SEC.3. A SEAL ON THIS DRAWING INDICATES ACCEPTANCE OF PROFESSIONAL ENGINEERING RESPONSIBILITY SOLELY FOR THE TRUSS COMPONENT DESIGN SHOWN. THE SUITABILITY AND USE OF THIS COMPONENT FOR ANY BUILDING IS THE RESPONSIBILITY OF THE BUILDING DESIGNER PER ANSI/TPI 1 SEC. 2.

ARTHUR R. FISHER
LICENSE
No. 59687
Aug 04 05
STATE OF FLORIDA
PROFESSIONAL ENGINEER

TC LL	20.0 PSF	REF	R487-- 93379
TC DL	10.0 PSF	DATE	08/04/05
BC DL	10.0 PSF	DRW	HCUSR487 05216049
BC LL	0.0 PSF	HC-ENG	JB/AF
TOT.LD.	40.0 PSF	SEQN-	150890
DUR.FAC.	1.25		
SPACING	24.0"	JREF-	1SPC487_Z01

THIS DWG PREPARED FROM COMPUTER INPUT (LOADS & DIMENSIONS) SUBMITTED BY TRUSS MFR.

Top chord 2x4 SP #2 Dense
Bot chord 2x4 SP #2 Dense
Webs 2x4 SP #3
:Lt Slider 2x4 SP #3: BLOCK LENGTH = 1.886'
:Rt Slider 2x4 SP #3: BLOCK LENGTH = 1.886'

Calculated horizontal deflection is 0.19" due to live load and 0.18" due to dead load.

(**) Plate relocated as shown.

110 mph wind, 21.92 ft mean hgt, ASCE 7-98, CLOSED bldg, not located within 4.50 ft from roof edge, CAT II, EXP B, wind TC DL=2.8 psf, wind BC DL=2.2 psf.

Deflection meets L/360 live and L/240 total load.

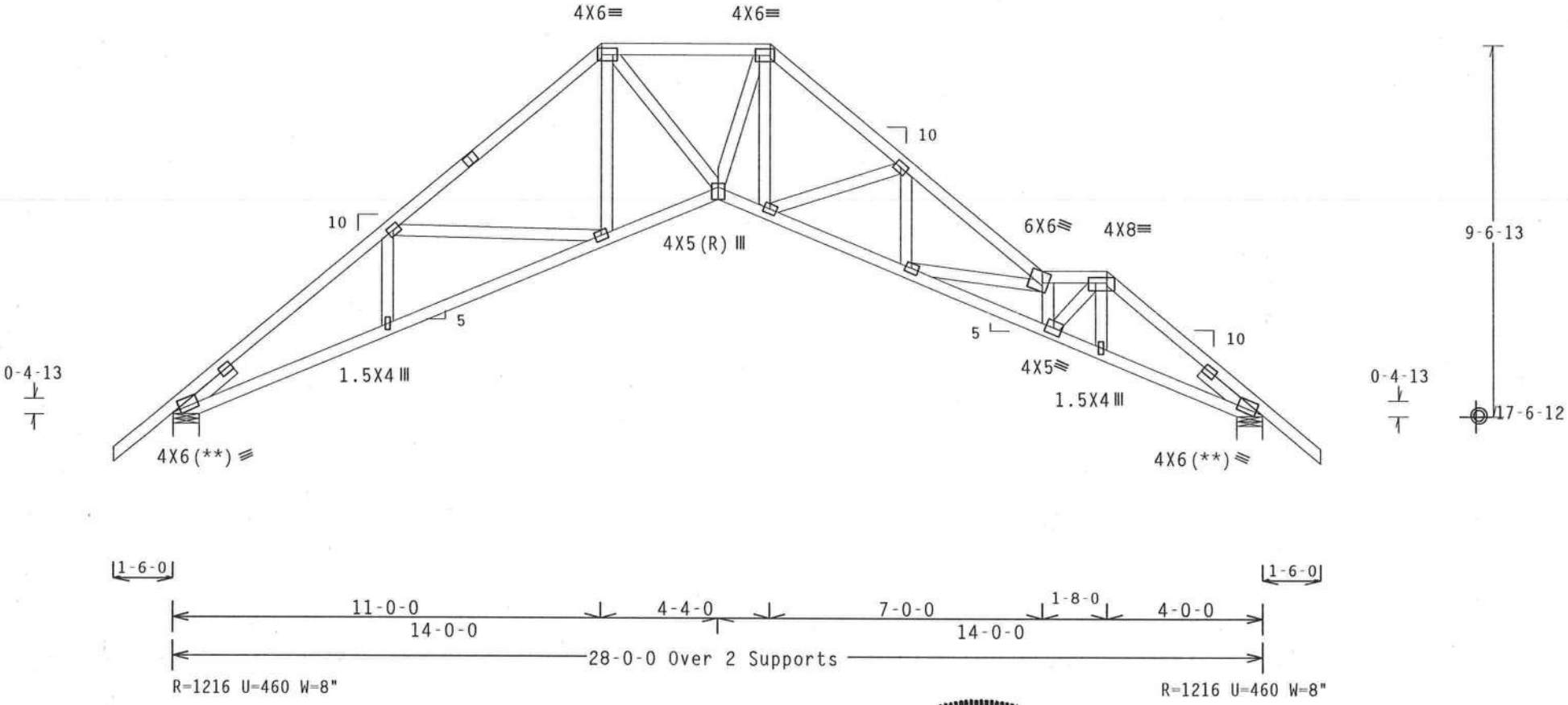

Note: All Plates Are 3X4 Except As Shown.

PLT TYP. Wave TPI | Design Crit: TPI-1995(STD)/FBC | 7.0.0.0.5.16 | QTY. | FL/-/3/-/-/R/- | Scale =.25"/Ft.

ALPINE
Alpine Engineered Products, Inc
1950 Marley Drive
Haines City, FL 33844
FL Certificate of Authorization # 567

WARNING TRUSSES REQUIRE EXTREME CARE IN FABRICATION, HANDLING, SHIPPING, INSTALLING AND BRACING. REFER TO BCSI 1-03 (BUILDING COMPONENT SAFETY INFORMATION), PUBLISHED BY TPI (TRUSS PLATE INSTITUTE, 583 D'ONOFRIO DR., SUITE 200, MADISON, WI 53719) AND WTCA (WOOD TRUSS COUNCIL OF AMERICA, 6300 ENTERPRISE LN, MADISON, WI 53719) FOR SAFETY PRACTICES PRIOR TO PERFORMING THESE FUNCTIONS. UNLESS OTHERWISE INDICATED, TOP CHORD SHALL HAVE PROPERLY ATTACHED STRUCTURAL PANELS AND BOTTOM CHORD SHALL HAVE A PROPERLY ATTACHED RIGID CEILING.

IMPORTANT FURNISH A COPY OF THIS DESIGN TO THE INSTALLATION CONTRACTOR. ALPINE ENGINEERED PRODUCTS, INC. SHALL NOT BE RESPONSIBLE FOR ANY DEVIATION FROM THIS DESIGN; ANY FAILURE TO BUILD THE TRUSS IN CONFORMANCE WITH TPI; OR FABRICATING, HANDLING, SHIPPING, INSTALLING & BRACING OF TRUSSES. DESIGN CONFORMS WITH APPLICABLE PROVISIONS OF NDS (NATIONAL DESIGN SPEC. BY AF&PA) AND TPI. ALPINE CONNECTOR PLATES ARE MADE OF 20/18/16GA (W,H/S/K) ASTM A653 GRADE 40/60 (W, K/H,S) GALV. STEEL. APPLY PLATES TO EACH FACE OF TRUSS AND, UNLESS OTHERWISE LOCATED ON THIS DESIGN, POSITION PER DRAWINGS 160A-2. ANY INSPECTION OF PLATES FOLLOWED BY (1) SHALL BE PER ANNEX A3 OF TPI1-2002 SEC.3. A SEAL ON THIS DRAWING INDICATES ACCEPTANCE OF PROFESSIONAL ENGINEERING RESPONSIBILITY SOLELY FOR THE TRUSS COMPONENT DESIGN SHOWN. THE SUITABILITY AND USE OF THIS COMPONENT FOR ANY BUILDING IS THE RESPONSIBILITY OF THE BUILDING DESIGNER PER ANSI/TPI 1 SEC. 2.

ARTHUR R. FISHER LICENSE No.59687 STATE OF FLORIDA PROFESSIONAL ENGINEER
08/14/05

TC LL	20.0 PSF	REF R487-- 93380
TC DL	10.0 PSF	DATE 08/04/05
BC DL	10.0 PSF	DRW HCUSR487 05216050
BC LL	0.0 PSF	HC-ENG JB/AF
TOT.LD.	40.0 PSF	SEQN- 150900
DUR.FAC.	1.25	
SPACING	24.0"	JREF- 1SPC487_Z01

(5-318A-PAUL BROWN/ROOF - H7B)

Top chord 2x4 SP #2 Dense
Bot chord 2x4 SP #2 Dense
Webs 2x4 SP #3

SPECIAL LOADS
------(LUMBER DUR.FAC.=1.25 / PLATE DUR.FAC.=1.25)
TC - From 60 PLF at -1.50 to 60 PLF at 27.83
BC - From 4 PLF at -1.50 to 4 PLF at 0.00
BC - From 20 PLF at 0.00 to 20 PLF at 26.33
BC - From 4 PLF at 26.33 to 4 PLF at 27.83
TC - 426 LB Conc. Load at 7.00
TC - 178 LB Conc. Load at 9.06, 11.06
BC - 424 LB Conc. Load at 7.00
BC - 75 LB Conc. Load at 9.06, 11.06
BC - 1304 LB Conc. Load at 11.94

110 mph wind, 20.25 ft mean hgt, ASCE 7-98, CLOSED bldg, not located within 4.50 ft from roof edge, CAT II, EXP B, wind TC DL=2.8 psf, wind BC DL=2.2 psf.

(A) Continuous lateral bracing equally spaced on member.

Deflection meets L/360 live and L/240 total load.

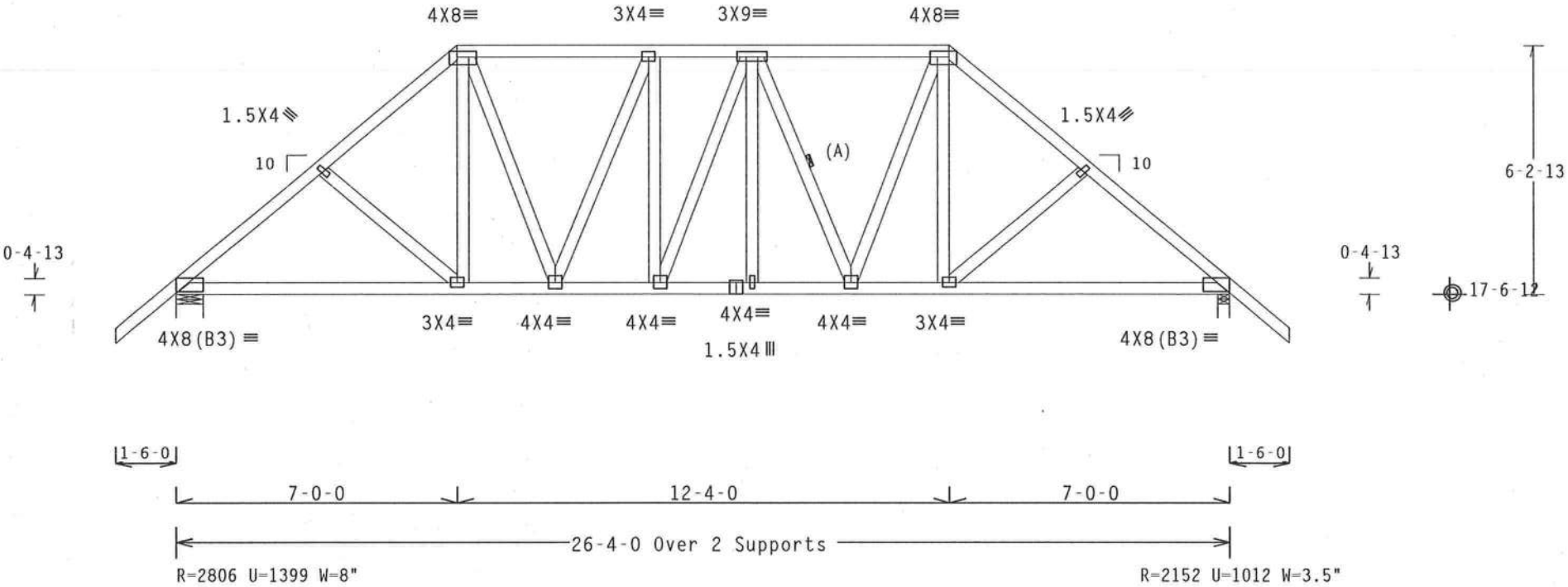

PLT TYP. Wave TPI | Design Crit: TPI-1995(STD)/FBC | 7.0 [illegible] 1 | FL/-/3/-/-/R/- | Scale =.25"/Ft.

ALPINE
Alpine Engineered Products, Inc
1950 Marley Drive
Haines City, FL 33844
FL Certificate of Authorization # 567

WARNING TRUSSES REQUIRE EXTREME CARE IN FABRICATION, HANDLING, SHIPPING, INSTALLING AND BRACING. REFER TO BCSI 1-03 (BUILDING COMPONENT SAFETY INFORMATION), PUBLISHED BY TPI (TRUSS PLATE INSTITUTE, 583 D'ONOFRIO DR., SUITE 200, MADISON, WI 53719) AND WTCA (WOOD TRUSS COUNCIL OF AMERICA, 6300 ENTERPRISE LN MADISON, WI 53719) FOR SAFETY PRACTICES PRIOR TO PERFORMING THESE FUNCTIONS. UNLESS OTHERWISE INDICATED TOP CHORD SHALL HAVE PROPERLY ATTACHED STRUCTURAL PANELS AND BOTTOM CHORD SHALL HAVE A PROPERLY ATTACHED RIGID CEILING.

IMPORTANT FURNISH A COPY OF THIS DESIGN TO THE INSTALLATION CONTRACTOR. ALPINE ENGINEERED PRODUCTS, INC. SHALL NOT BE RESPONSIBLE FOR ANY DEVIATION FROM THIS DESIGN; ANY FAILURE TO BUILD THE TRUSS IN CONFORMANCE WITH TPI; OR FABRICATING, HANDLING, SHIPPING, INSTALLING & BRACING OF TRUSSES. DESIGN CONFORMS WITH APPLICABLE PROVISIONS OF NDS (NATIONAL DESIGN SPEC, BY AF&PA) AND TPI. ALPINE CONNECTOR PLATES ARE MADE OF 20/18/16GA (W,H/S/K) ASTM A653 GRADE 40/60 (W, K/H,S) GALV. STEEL. APPLY PLATES TO EACH FACE OF TRUSS AND, UNLESS OTHERWISE LOCATED ON THIS DESIGN, POSITION PER DRAWINGS 160A-Z. ANY INSPECTION OF PLATES FOLLOWED BY (I) SHALL BE PER ANNEX A3 OF TPI1-2002 SEC.3. A SEAL ON THIS DRAWING INDICATES ACCEPTANCE OF PROFESSIONAL ENGINEERING RESPONSIBILITY SOLELY FOR THE TRUSS COMPONENT DESIGN SHOWN. THE SUITABILITY AND USE OF THIS COMPONENT FOR ANY BUILDING IS THE RESPONSIBILITY OF THE BUILDING DESIGNER PER ANSI/TPI 1 SEC. 2.

ARTHUR R. FISHER
LICENSE
No.59687
AUG 04 '05
STATE OF FLORIDA
PROFESSIONAL ENGINEER

TC LL	20.0 PSF	REF R487-- 93381
TC DL	10.0 PSF	DATE 08/04/05
BC DL	10.0 PSF	DRW HCUSR487 05216051
BC LL	0.0 PSF	HC-ENG JB/AF
TOT.LD.	40.0 PSF	SEQN- 150789
DUR.FAC.	1.25	
SPACING	24.0"	JREF- 1SPC487_Z01

(5-318A-PAUL BROWN/ROOF - H9B)

THIS DWG PREPARED FROM COMPUTER INPUT (LOADS & DIMENSIONS) SUBMITTED BY TRUSS MFR.

Top chord 2x4 SP #2 Dense
Bot chord 2x4 SP #2 Dense
Webs 2x4 SP #3

(A) Continuous lateral bracing equally spaced on member.

110 mph wind, 21.09 ft mean hgt, ASCE 7-98, CLOSED bldg, not located within 4.50 ft from roof edge, CAT II, EXP B, wind TC DL=2.8 psf, wind BC DL=2.2 psf.

Deflection meets L/360 live and L/240 total load.

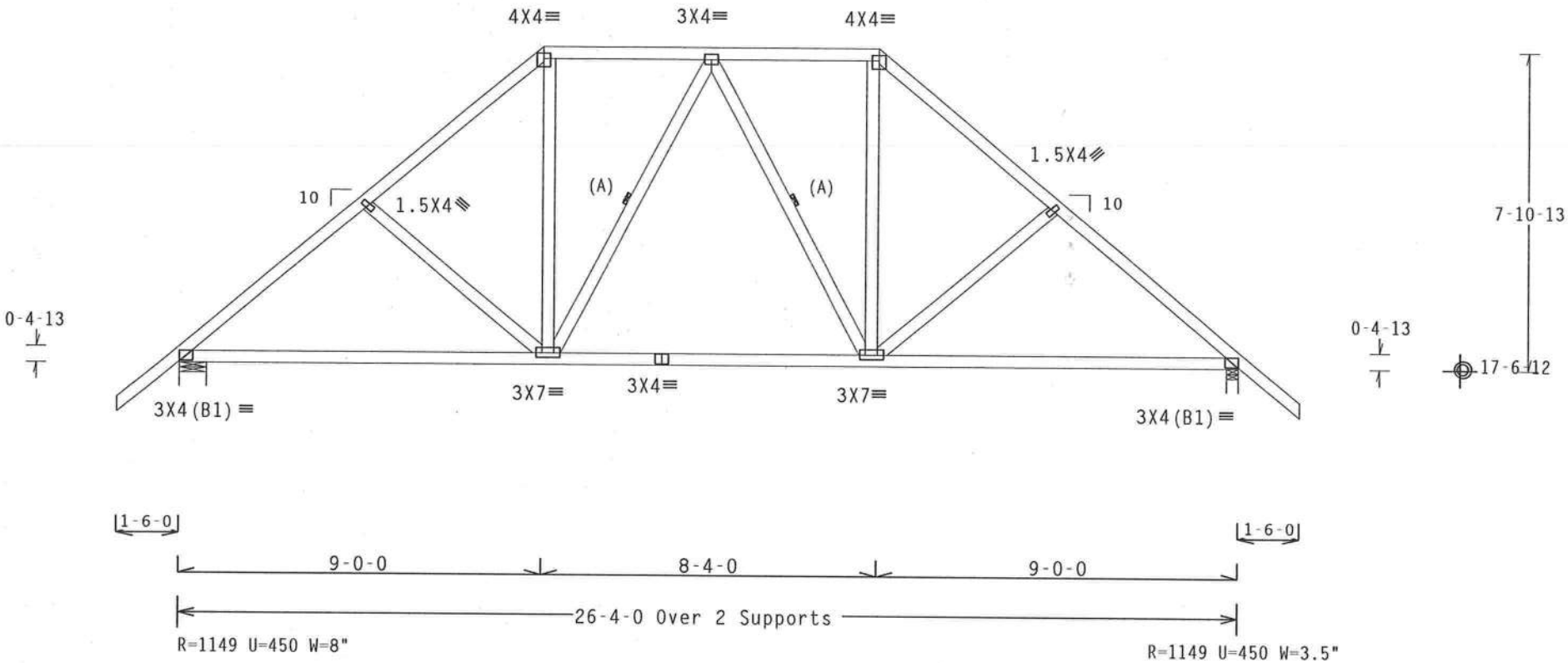

PLT TYP. Wave TPI

Design Crit: TPI-1995(STD)/FBC

7.04.0805.1 1

FL/-/3/-/-/R/-

Scale =.25"/Ft.

ALPINE

Alpine Engineered Products, Inc
1950 Marley Drive
Haines City, FL 33844
FL Certificate of Authorization # 567

WARNING TRUSSES REQUIRE EXTREME CARE IN FABRICATION, HANDLING, SHIPPING, INSTALLING AND BRACING. REFER TO BCSI 1-03 (BUILDING COMPONENT SAFETY INFORMATION), PUBLISHED BY TPI (TRUSS PLATE INSTITUTE, 583 D'ONOFRIO DR., SUITE 200, MADISON, WI 53719) AND WTCA (WOOD TRUSS COUNCIL OF AMERICA, 6300 ENTERPRISE LN, MADISON, WI 53719) FOR SAFETY PRACTICES PRIOR TO PERFORMING THESE FUNCTIONS. UNLESS OTHERWISE INDICATED, TOP CHORD SHALL HAVE PROPERLY ATTACHED STRUCTURAL PANELS AND BOTTOM CHORD SHALL HAVE A PROPERLY ATTACHED RIGID CEILING.

IMPORTANT FURNISH A COPY OF THIS DESIGN TO THE INSTALLATION CONTRACTOR. ALPINE ENGINEERED PRODUCTS, INC. SHALL NOT BE RESPONSIBLE FOR ANY DEVIATION FROM THIS DESIGN; ANY FAILURE TO BUILD THE TRUSS IN CONFORMANCE WITH TPI; OR FABRICATING, HANDLING, SHIPPING, INSTALLING & BRACING OF TRUSSES. DESIGN CONFORMS WITH APPLICABLE PROVISIONS OF NDS (NATIONAL DESIGN SPEC. BY AF&PA) AND TPI. ALPINE CONNECTOR PLATES ARE MADE OF 20/18/16GA (W,H/S/K) ASTM A653 GRADE 40/60 (W, K/H,S) GALV. STEEL. APPLY PLATES TO EACH FACE OF TRUSS AND, UNLESS OTHERWISE LOCATED ON THIS DESIGN, POSITION PER DRAWINGS 160A-Z. ANY INSPECTION OF PLATES FOLLOWED BY (1) SHALL BE PER ANNEX A3 OF TPI1-2002 SEC.3. A SEAL ON THIS DRAWING INDICATES ACCEPTANCE OF PROFESSIONAL ENGINEERING RESPONSIBILITY SOLELY FOR THE TRUSS COMPONENT DESIGN SHOWN. THE SUITABILITY AND USE OF THIS COMPONENT FOR ANY BUILDING IS THE RESPONSIBILITY OF THE BUILDING DESIGNER PER ANSI/TPI 1 SEC. 2.

ARTHUR R. FISHER LICENSE No. 59687 STATE OF FLORIDA PROFESSIONAL ENGINEER

TC LL	20.0 PSF	REF	R487-- 93382
TC DL	10.0 PSF	DATE	08/04/05
BC DL	10.0 PSF	DRW	HCUSR487 05216040
BC LL	0.0 PSF	HC-ENG	JB/AF *
TOT.LD.	40.0 PSF	SEQN-	150795
DUR.FAC.	1.25		
SPACING	24.0"	JREF-	1SPC487_Z01

(5-318A-PAUL BROWN/ROOF - H11B)

THIS DWG PREPARED FROM COMPUTER INPUT (LOADS & DIMENSIONS) SUBMITTED BY TRUSS MFR.

Top chord 2x4 SP #2 Dense
Bot chord 2x4 SP #2 Dense
Webs 2x4 SP #3

Deflection meets L/360 live and L/240 total load.

110 mph wind, 21.92 ft mean hgt, ASCE 7-98, CLOSED bldg, not located within 4.50 ft from roof edge, CAT II, EXP B, wind TC DL=2.8 psf, wind BC DL=2.2 psf.

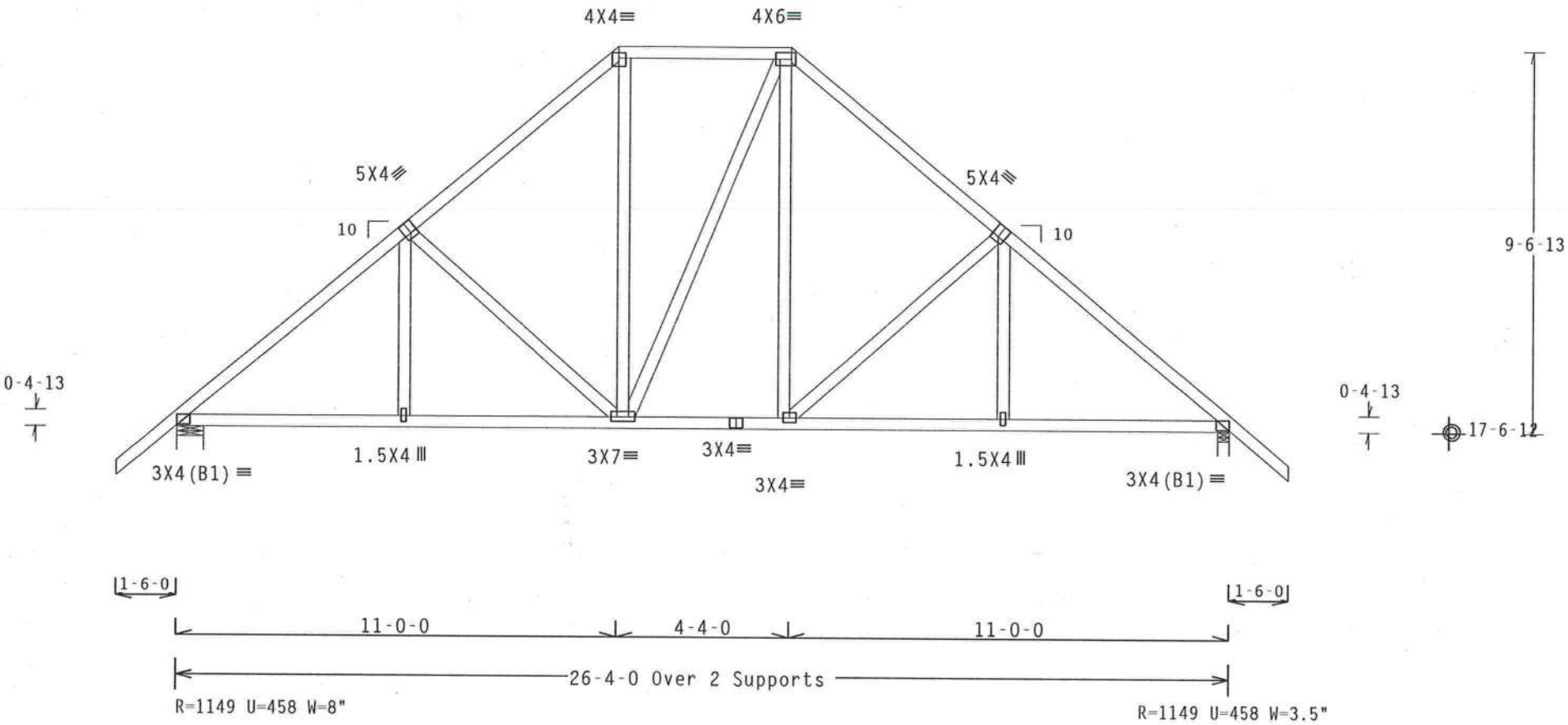

PLT TYP. Wave TPI

Design Crit: TPI-1995(STD)/FBC

7.04 [illegible] FL/-/3/-/-/R/-

Scale =.25"/Ft.

ALPINE

Alpine Engineered Products, Inc.
1950 Marley Drive
Haines City, FL 33844
FL Certificate of Authorization # 567

WARNING TRUSSES REQUIRE EXTREME CARE IN FABRICATION, HANDLING, SHIPPING, INSTALLING AND BRACING. REFER TO BCSI 1-03 (BUILDING COMPONENT SAFETY INFORMATION), PUBLISHED BY TPI (TRUSS PLATE INSTITUTE, 583 D'ONOFRIO DR., SUITE 200, MADISON, WI 53719) AND WTCA (WOOD TRUSS COUNCIL OF AMERICA, 6300 ENTERPRISE LN, MADISON, WI 53719) FOR SAFETY PRACTICES PRIOR TO PERFORMING THESE FUNCTIONS. UNLESS OTHERWISE INDICATED, TOP CHORD SHALL HAVE PROPERLY ATTACHED STRUCTURAL PANELS AND BOTTOM CHORD SHALL HAVE A PROPERLY ATTACHED RIGID CEILING.

IMPORTANT FURNISH A COPY OF THIS DESIGN TO THE INSTALLATION CONTRACTOR. ALPINE ENGINEERED PRODUCTS, INC. SHALL NOT BE RESPONSIBLE FOR ANY DEVIATION FROM THIS DESIGN; ANY FAILURE TO BUILD THE TRUSS IN CONFORMANCE WITH TPI; OR FABRICATING, HANDLING, SHIPPING, INSTALLING & BRACING OF TRUSSES. DESIGN CONFORMS WITH APPLICABLE PROVISIONS OF NDS (NATIONAL DESIGN SPEC, BY AF&PA) AND TPI. ALPINE CONNECTOR PLATES ARE MADE OF 20/18/16GA (W,H/S/K) ASTM A653 GRADE 40/60 (W, K/H,S) GALV. STEEL. APPLY PLATES TO EACH FACE OF TRUSS AND, UNLESS OTHERWISE LOCATED ON THIS DESIGN, POSITION PER DRAWINGS 160A-Z, ANY INSPECTION OF PLATES FOLLOWED BY (1) SHALL BE PER ANNEX A3 OF TPI1-2002 SEC.3. A SEAL ON THIS DRAWING INDICATES ACCEPTANCE OF PROFESSIONAL ENGINEERING RESPONSIBILITY SOLELY FOR THE TRUSS COMPONENT DESIGN SHOWN. THE SUITABILITY AND USE OF THIS COMPONENT FOR ANY BUILDING IS THE RESPONSIBILITY OF THE BUILDING DESIGNER PER ANSI/TPI 1 SEC. 2.

ARTHUR R. FISHER
LICENSE
No. 59687
Aug 04 05
STATE OF FLORIDA
PROFESSIONAL ENGINEER

TC LL	20.0 PSF	REF R487-- 93383
TC DL	10.0 PSF	DATE 08/04/05
BC DL	10.0 PSF	DRW HCUSR487 05216041
BC LL	0.0 PSF	HC-ENG JB/AF *
TOT.LD.	40.0 PSF	SEQN- 150827
DUR.FAC.	1.25	
SPACING	24.0"	JREF- 1SPC487_Z01

(5-318A-PAUL BROWN/ROOF - H5C)

Top chord 2x4 SP #2 Dense
Bot chord 2x4 SP #2 Dense
Webs 2x4 SP #3

#1 hip supports 5-0-0 jacks with no webs.

110 mph wind, 19.42 ft mean hgt, ASCE 7-98, CLOSED bldg, Located anywhere in roof, CAT II, EXP B, wind TC DL=2.8 psf, wind BC DL=2.2 psf.

Deflection meets L/360 live and L/240 total load.

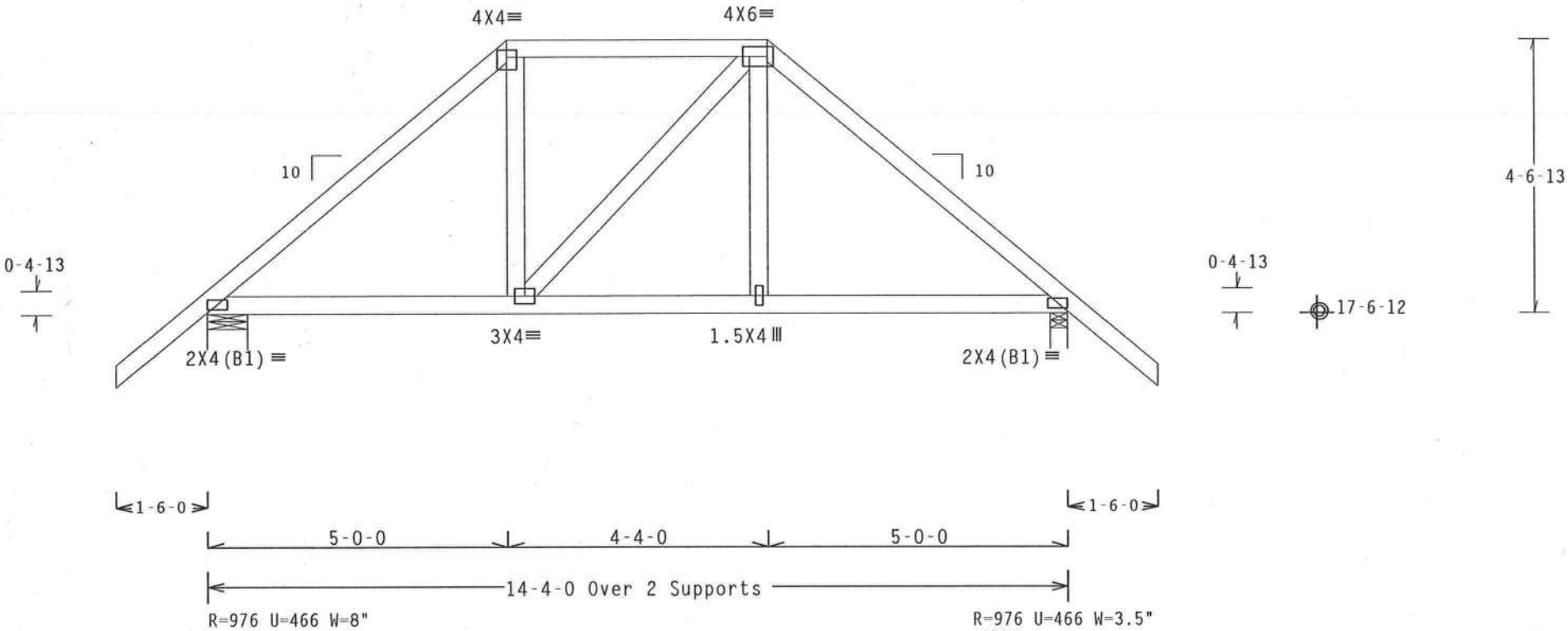

PLT TYP. Wave TPI Design Crit: TPI-1995(STD)/FBC 7.0.4.8805.16 Ply 1 FL/-/3/-/-/R/- Scale =.375"/Ft.

ALPINE
Alpine Engineered Products, Inc.
1950 Marley Drive
Haines City, FL 33844
FL Certificate of Authorization # 567

WARNING TRUSSES REQUIRE EXTREME CARE IN FABRICATION, HANDLING, SHIPPING, INSTALLING AND BRACING. REFER TO BCSI 1-03 (BUILDING COMPONENT SAFETY INFORMATION), PUBLISHED BY TPI (TRUSS PLATE INSTITUTE, 583 D'ONOFRIO DR., SUITE 200, MADISON, WI 53719) AND WTCA (WOOD TRUSS COUNCIL OF AMERICA, 6300 ENTERPRISE LN MADISON, WI 53719) FOR SAFETY PRACTICES PRIOR TO PERFORMING THESE FUNCTIONS. UNLESS OTHERWISE INDICATED TOP CHORD SHALL HAVE PROPERLY ATTACHED STRUCTURAL PANELS AND BOTTOM CHORD SHALL HAVE A PROPERLY ATTACHED RIGID CEILING.

IMPORTANT FURNISH A COPY OF THIS DESIGN TO THE INSTALLATION CONTRACTOR. ALPINE ENGINEERED PRODUCTS, INC. SHALL NOT BE RESPONSIBLE FOR ANY DEVIATION FROM THIS DESIGN; ANY FAILURE TO BUILD THE TRUSS IN CONFORMANCE WITH TPI; OR FABRICATING, HANDLING, SHIPPING, INSTALLING & BRACING OF TRUSSES. DESIGN CONFORMS WITH APPLICABLE PROVISIONS OF NDS (NATIONAL DESIGN SPEC. BY AF&PA) AND TPI. ALPINE CONNECTOR PLATES ARE MADE OF 20/18/16GA (W,H/S/K) ASTM A653 GRADE 40/60 (W, K/H,S) GALV. STEEL. APPLY PLATES TO EACH FACE OF TRUSS AND, UNLESS OTHERWISE LOCATED ON THIS DESIGN, POSITION PER DRAWINGS 160A-Z. ANY INSPECTION OF PLATES FOLLOWED BY (1) SHALL BE PER ANNEX A3 OF TPI1-2002 SEC.3. A SEAL ON THIS DRAWING INDICATES ACCEPTANCE OF PROFESSIONAL ENGINEERING RESPONSIBILITY SOLELY FOR THE TRUSS COMPONENT DESIGN SHOWN. THE SUITABILITY AND USE OF THIS COMPONENT FOR ANY BUILDING IS THE RESPONSIBILITY OF THE BUILDING DESIGNER PER ANSI/TPI 1 SEC. 2.

ARTHUR R. FISHER LICENSE No.59687 STATE OF FLORIDA PROFESSIONAL ENGINEER
Aug 04 '05

TC LL	20.0 PSF	REF R487-- 93384
TC DL	10.0 PSF	DATE 08/04/05
BC DL	10.0 PSF	DRW HCUSR487 05216052
BC LL	0.0 PSF	HC-ENG JB/AF
TOT.LD.	40.0 PSF	SEQN- 150694
DUR.FAC.	1.25	
SPACING	24.0"	JREF- 1SPC487_Z01

(5-318A-PAUL BROWN/ROOF - H7C)

THIS DWG PREPARED FROM COMPUTER INPUT (LOADS & DIMENSIONS) SUBMITTED BY TRUSS-MFR.

Top chord 2x4 SP #2 Dense
Bot chord 2x4 SP #2 Dense
Webs 2x4 SP #3

Deflection meets L/360 live and L/240 total load.

110 mph wind, 20.25 ft mean hgt, ASCE 7-98, CLOSED bldg, not located within 4.50 ft from roof edge, CAT II, EXP B, wind TC DL=2.8 psf, wind BC DL=2.2 psf.

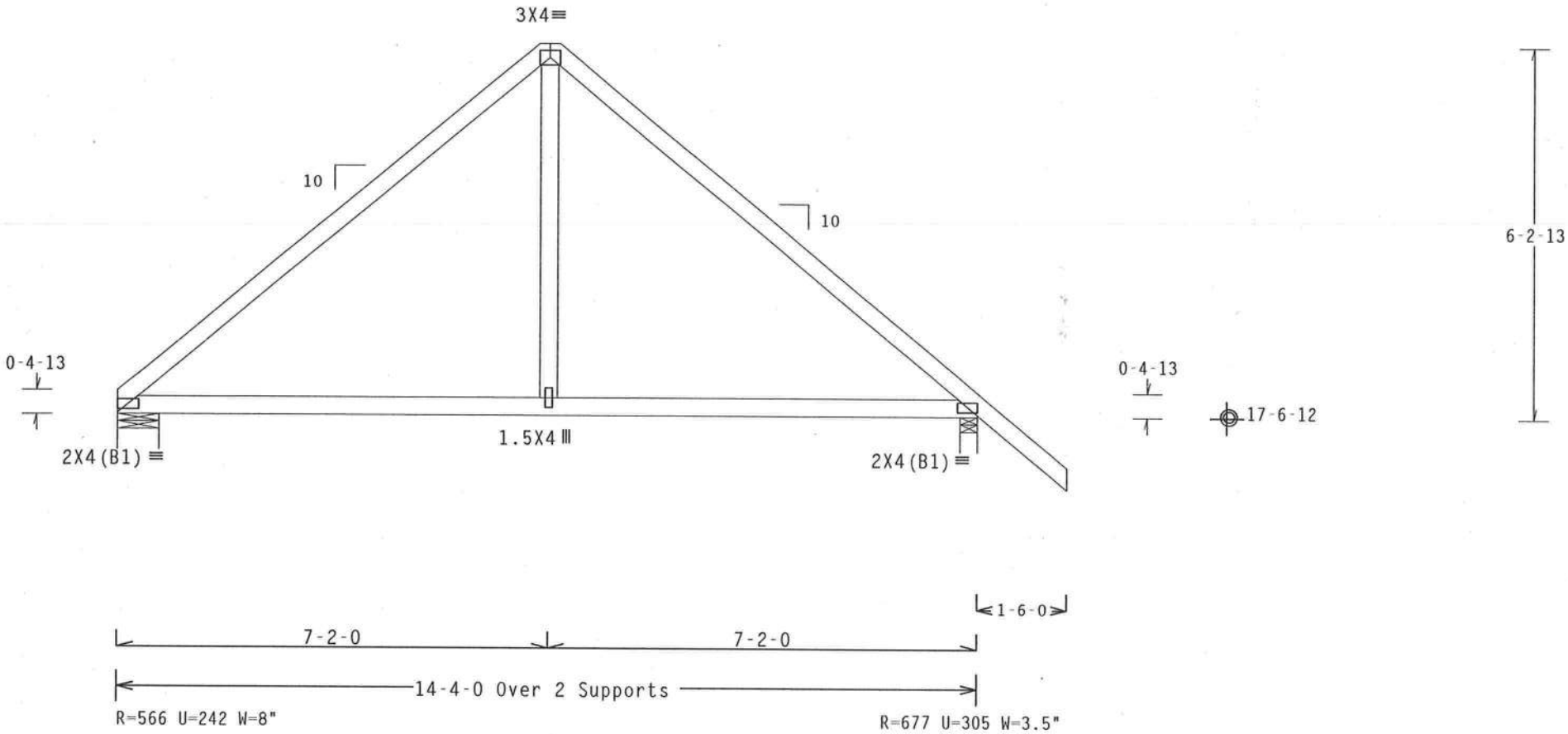

PLT TYP. Wave TPI

Design Crit: TPI-1995(STD)/FBC

7.04 [illegible] FL/-/3/-/-/R/-

Scale =.375"/Ft.

ALPINE

Alpine Engineered Products, Inc
1950 Marley Drive
Haines City, FL 33844
FL Certificate of Authorization # 567

WARNING TRUSSES REQUIRE EXTREME CARE IN FABRICATION, HANDLING, SHIPPING, INSTALLING AND BRACING. REFER TO BCSI 1-03 (BUILDING COMPONENT SAFETY INFORMATION), PUBLISHED BY TPI (TRUSS PLATE INSTITUTE, 583 D'ONOFRIO DR., SUITE 200, MADISON, WI 53719) AND WTCA (WOOD TRUSS COUNCIL OF AMERICA, 6300 ENTERPRISE LN, MADISON, WI 53719) FOR SAFETY PRACTICES PRIOR TO PERFORMING THESE FUNCTIONS. UNLESS OTHERWISE INDICATED, TOP CHORD SHALL HAVE PROPERLY ATTACHED STRUCTURAL PANELS AND BOTTOM CHORD SHALL HAVE A PROPERLY ATTACHED RIGID CEILING.

IMPORTANT FURNISH A COPY OF THIS DESIGN TO THE INSTALLATION CONTRACTOR. ALPINE ENGINEERED PRODUCTS, INC. SHALL NOT BE RESPONSIBLE FOR ANY DEVIATION FROM THIS DESIGN; ANY FAILURE TO BUILD THE TRUSS IN CONFORMANCE WITH TPI; OR FABRICATING, HANDLING, SHIPPING, INSTALLING & BRACING OF TRUSSES. DESIGN CONFORMS WITH APPLICABLE PROVISIONS OF NDS (NATIONAL DESIGN SPEC. BY AF&PA) AND TPI. ALPINE CONNECTOR PLATES ARE MADE OF 20/18/16GA (W,H/S/K) ASTM A653 GRADE 40/60 (W, K/H,S) GALV. STEEL. APPLY PLATES TO EACH FACE OF TRUSS AND, UNLESS OTHERWISE LOCATED ON THIS DESIGN, POSITION PER DRAWINGS 160A-Z. ANY INSPECTION OF PLATES FOLLOWED BY (1) SHALL BE PER ANNEX A3 OF TPI1-2002 SEC.3. A SEAL ON THIS DRAWING INDICATES ACCEPTANCE OF PROFESSIONAL ENGINEERING RESPONSIBILITY SOLELY FOR THE TRUSS COMPONENT DESIGN SHOWN. THE SUITABILITY AND USE OF THIS COMPONENT FOR ANY BUILDING IS THE RESPONSIBILITY OF THE BUILDING DESIGNER PER ANSI/TPI 1 SEC. 2.

ARTHUR R. FISHER
LICENSE
No. 59687
AUG 04 '05
STATE OF FLORIDA
PROFESSIONAL ENGINEER

TC LL	20.0 PSF	REF	R487-- 93385
TC DL	10.0 PSF	DATE	08/04/05
BC DL	10.0 PSF	DRW	HCUSR487 05216042
BC LL	0.0 PSF	HC-ENG	JB/AF *
TOT.LD.	40.0 PSF	SEQN-	150698
DUR.FAC.	1.25		
SPACING	24.0"	JREF-	1SPC487_Z01

(5-318A-PAUL BROWN/ROOF - C)

Top chord 2x4 SP #2 Dense
Bot chord 2x4 SP #2 Dense
Webs 2x4 SP #3

H = recommended connection based on manufacturer tested capacities and calculations. Conditions may exist that require different connections than indicated. Refer to manufacturer publication for additional information.

110 mph wind, 20.32 ft mean hgt, ASCE 7-98, CLOSED bldg, not located within 4.50 ft from roof edge, CAT II, EXP B, wind TC DL=2.8 psf, wind BC DL=2.2 psf.

Deflection meets L/360 live and L/240 total load.

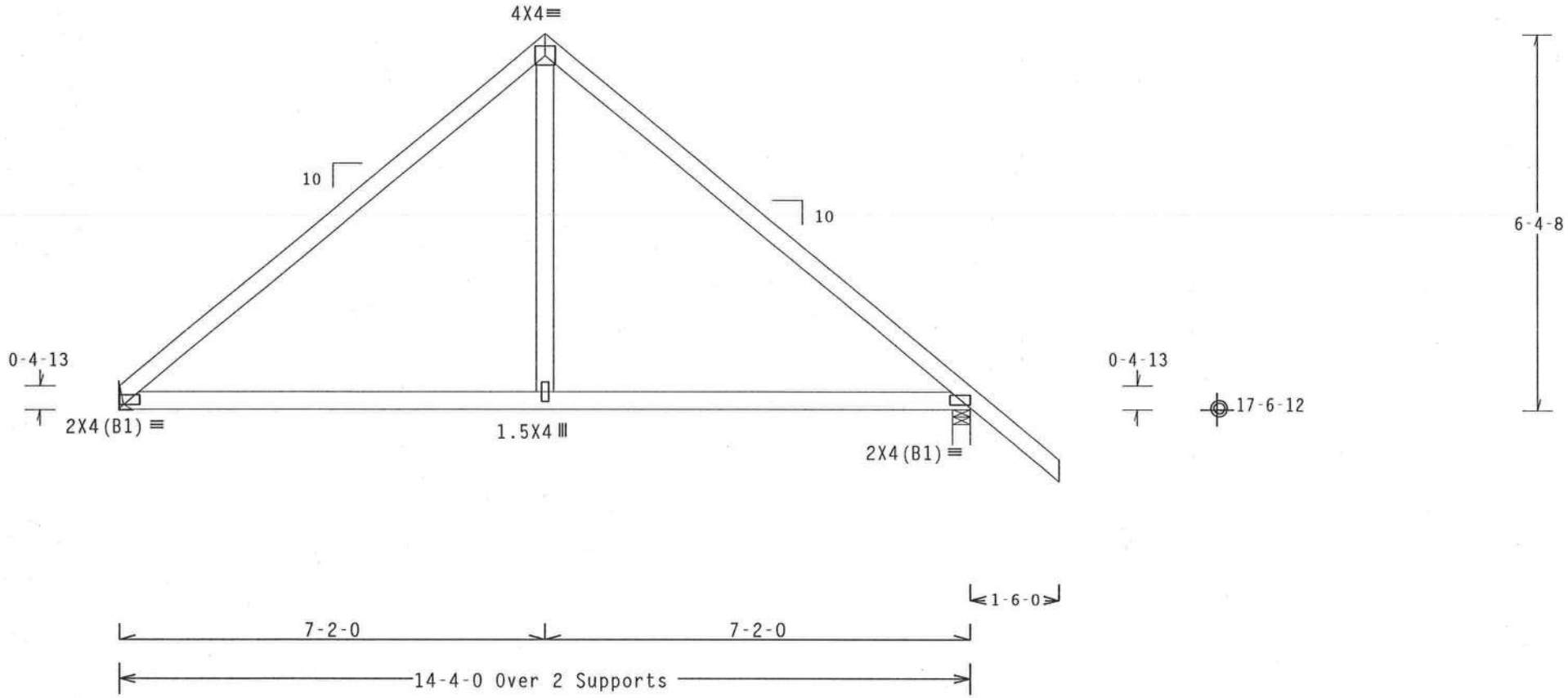

R=564 U=244 H=Simpson LU26
w/ (4) 10d, 0.148"x1.5" nails in Truss
w/ (6) 10d Common, 0.148"x3.0" nails in Girder
Girder is (1)2X6 min. So.Pine

R=678 U=308 W=3.5"

PLT TYP. Wave TPI Design Crit: TPI-1995(STD)/FBC 7.0.[illegible]05.26 [illegible]3 FL/-/3/-/-/R/- Scale =.375"/Ft.

ALPINE
Alpine Engineered Products, Inc.
1950 Marley Drive
Haines City, FL 33844
FL Certificate of Authorization # 567

WARNING TRUSSES REQUIRE EXTREME CARE IN FABRICATION, HANDLING, SHIPPING, INSTALLING AND BRACING. REFER TO BCSI 1-03 (BUILDING COMPONENT SAFETY INFORMATION), PUBLISHED BY TPI (TRUSS PLATE INSTITUTE, 583 D'ONOFRIO DR., SUITE 200, MADISON, WI 53719) AND WTCA (WOOD TRUSS COUNCIL OF AMERICA, 6300 ENTERPRISE LN, MADISON, WI 53719) FOR SAFETY PRACTICES PRIOR TO PERFORMING THESE FUNCTIONS. UNLESS OTHERWISE INDICATED, TOP CHORD SHALL HAVE PROPERLY ATTACHED STRUCTURAL PANELS AND BOTTOM CHORD SHALL HAVE A PROPERLY ATTACHED RIGID CEILING.

IMPORTANT FURNISH A COPY OF THIS DESIGN TO THE INSTALLATION CONTRACTOR. ALPINE ENGINEERED PRODUCTS, INC. SHALL NOT BE RESPONSIBLE FOR ANY DEVIATION FROM THIS DESIGN; ANY FAILURE TO BUILD THE TRUSS IN CONFORMANCE WITH TPI; OR FABRICATING, HANDLING, SHIPPING, INSTALLING & BRACING OF TRUSSES. DESIGN CONFORMS WITH APPLICABLE PROVISIONS OF NDS (NATIONAL DESIGN SPEC, BY AF&PA) AND TPI. ALPINE CONNECTOR PLATES ARE MADE OF 20/18/16GA (W,H/S/K) ASTM A653 GRADE 40/60 (W, K/H,S) GALV. STEEL. APPLY PLATES TO EACH FACE OF TRUSS AND, UNLESS OTHERWISE LOCATED ON THIS DESIGN, POSITION PER DRAWINGS 160A-Z. ANY INSPECTION OF PLATES FOLLOWED BY (1) SHALL BE PER ANNEX A3 OF TPI1-2002 SEC.3. A SEAL ON THIS DRAWING INDICATES ACCEPTANCE OF PROFESSIONAL ENGINEERING RESPONSIBILITY SOLELY FOR THE TRUSS COMPONENT DESIGN SHOWN. THE SUITABILITY AND USE OF THIS COMPONENT FOR ANY BUILDING IS THE RESPONSIBILITY OF THE BUILDING DESIGNER PER ANSI/TPI 1 SEC. 2.

ARTHUR R. FISHER
LICENSE
No. 59687
AUG 04 2005
STATE OF FLORIDA
PROFESSIONAL ENGINEER

TC LL	20.0 PSF	REF	R487-- 93386
TC DL	10.0 PSF	DATE	08/04/05
BC DL	10.0 PSF	DRW	HCUSR487 05216053
BC LL	0.0 PSF	HC-ENG	JB/AF
TOT.LD.	40.0 PSF	SEQN-	150703
DUR.FAC.	1.25		
SPACING	24.0"	JREF-	1SPC487_Z01

Top chord 2x4 SP #2 Dense
Bot chord 2x4 SP #2 Dense
Webs 2x4 SP #3

SPECIAL LOADS
------(LUMBER DUR.FAC.=1.25 / PLATE DUR.FAC.=1.25)

TC - From	81 PLF	at -1.50 to	81 PLF	at	10.50
BC - From	4 PLF	at -1.50 to	4 PLF	at	0.00
BC - From	20 PLF	at 0.00 to	20 PLF	at	9.00
BC - From	4 PLF	at 9.00 to	4 PLF	at	10.50

(**) Plate relocated as shown.

110 mph wind, 20.02 ft mean hgt, ASCE 7-98, CLOSED bldg, Located anywhere in roof, CAT II, EXP B, wind TC DL=2.8 psf, wind BC DL=2.2 psf.

See DWGS A11030EC1103 & GBLLETIN0405 for more requirements.

Deflection meets L/360 live and L/240 total load.

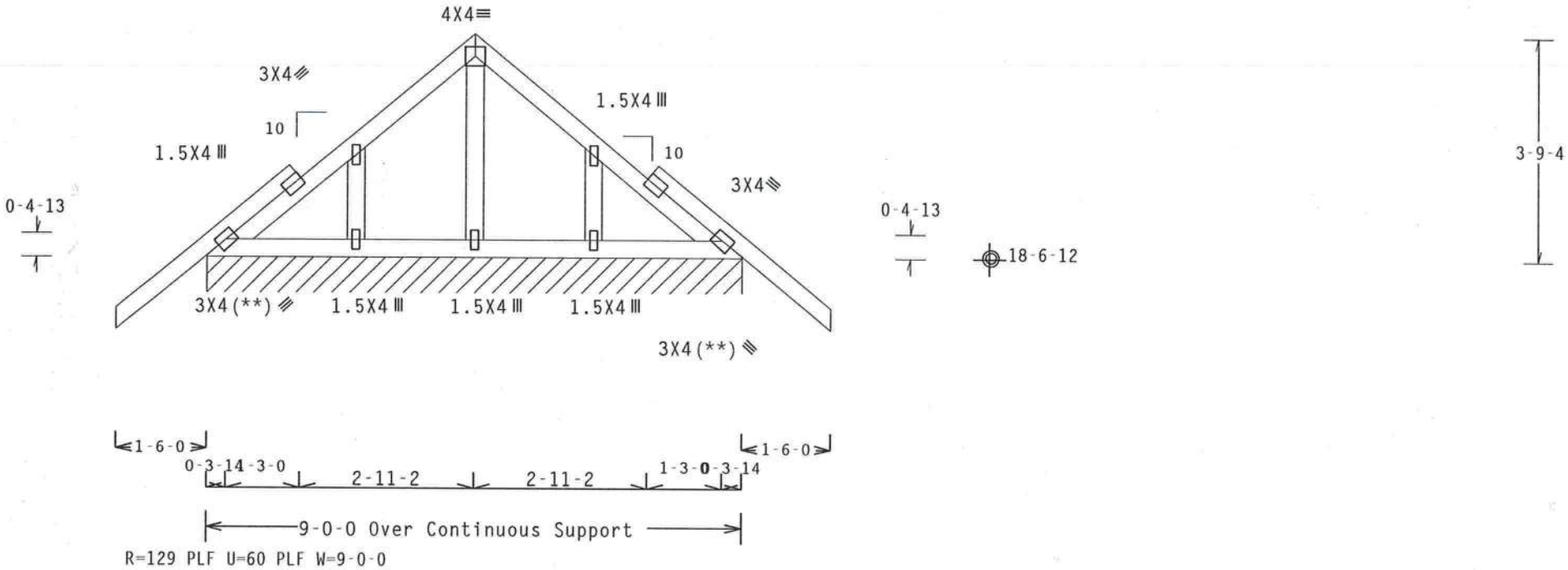

PLT TYP. Wave TPI Design Crit: TPI-1995(STD)/FBC 7.04.0805.16 Job: 1 FL/-/3/-/-/R/- Scale =.375"/Ft.

ALPINE
Alpine Engineered Products, Inc.
1950 Marley Drive
Haines City, FL 33844
FL Certificate of Authorization # 567

WARNING TRUSSES REQUIRE EXTREME CARE IN FABRICATION, HANDLING, SHIPPING, INSTALLING AND BRACING. REFER TO BCSI 1-03 (BUILDING COMPONENT SAFETY INFORMATION), PUBLISHED BY TPI (TRUSS PLATE INSTITUTE, 583 D'ONOFRIO DR., SUITE 200, MADISON, WI 53719) AND WTCA (WOOD TRUSS COUNCIL OF AMERICA, 6300 ENTERPRISE LN, MADISON, WI 53719) FOR SAFETY PRACTICES PRIOR TO PERFORMING THESE FUNCTIONS. UNLESS OTHERWISE INDICATED, TOP CHORD SHALL HAVE PROPERLY ATTACHED STRUCTURAL PANELS AND BOTTOM CHORD SHALL HAVE A PROPERLY ATTACHED RIGID CEILING.

IMPORTANT FURNISH A COPY OF THIS DESIGN TO THE INSTALLATION CONTRACTOR. ALPINE ENGINEERED PRODUCTS, INC. SHALL NOT BE RESPONSIBLE FOR ANY DEVIATION FROM THIS DESIGN; ANY FAILURE TO BUILD THE TRUSS IN CONFORMANCE WITH TPI; OR FABRICATING, HANDLING, SHIPPING, INSTALLING & BRACING OF TRUSSES. DESIGN CONFORMS WITH APPLICABLE PROVISIONS OF NDS (NATIONAL DESIGN SPEC. BY AF&PA) AND TPI. ALPINE CONNECTOR PLATES ARE MADE OF 20/18/16GA (W,H/S/K) ASTM A653 GRADE 40/60 (W, K/H,S) GALV. STEEL. APPLY PLATES TO EACH FACE OF TRUSS AND, UNLESS OTHERWISE LOCATED ON THIS DESIGN, POSITION PER DRAWINGS 160A-Z. ANY INSPECTION OF PLATES FOLLOWED BY (I) SHALL BE PER ANNEX A3 OF TPI1-2002 SEC.3. A SEAL ON THIS DRAWING INDICATES ACCEPTANCE OF PROFESSIONAL ENGINEERING RESPONSIBILITY SOLELY FOR THE TRUSS COMPONENT DESIGN SHOWN. THE SUITABILITY AND USE OF THIS COMPONENT FOR ANY BUILDING IS THE RESPONSIBILITY OF THE BUILDING DESIGNER PER ANSI/TPI 1 SEC. 2.

ARTHUR R. FISHER
LICENSE
No. 59687
Aug 04 2005
STATE OF FLORIDA
PROFESSIONAL ENGINEER

TC LL	20.0 PSF	REF	R487-- 93387
TC DL	10.0 PSF	DATE	08/04/05
BC DL	10.0 PSF	DRW	HCUSR487 05216054
BC LL	0.0 PSF	HC-ENG	JB/AF
TOT.LD.	40.0 PSF	SEQN-	150720
DUR.FAC.	1.25		
SPACING	24.0"	JREF-	1SPC487_Z01

(5-318A-PAUL BROWN/ROOF - D)

THIS DWG PREPARED FROM COMPUTER INPUT (LOADS & DIMENSIONS) SUBMITTED BY TRUSS MFR.

Top chord 2x4 SP #2 Dense
Bot chord 2x4 SP #2 Dense
Webs 2x4 SP #3

110 mph wind, 20.21 ft mean hgt, ASCE 7-98, CLOSED bldg, Located anywhere in roof, CAT II, EXP B, wind TC DL=2.8 psf, wind BC DL=2.2 psf.

Deflection meets L/360 live and L/240 total load.

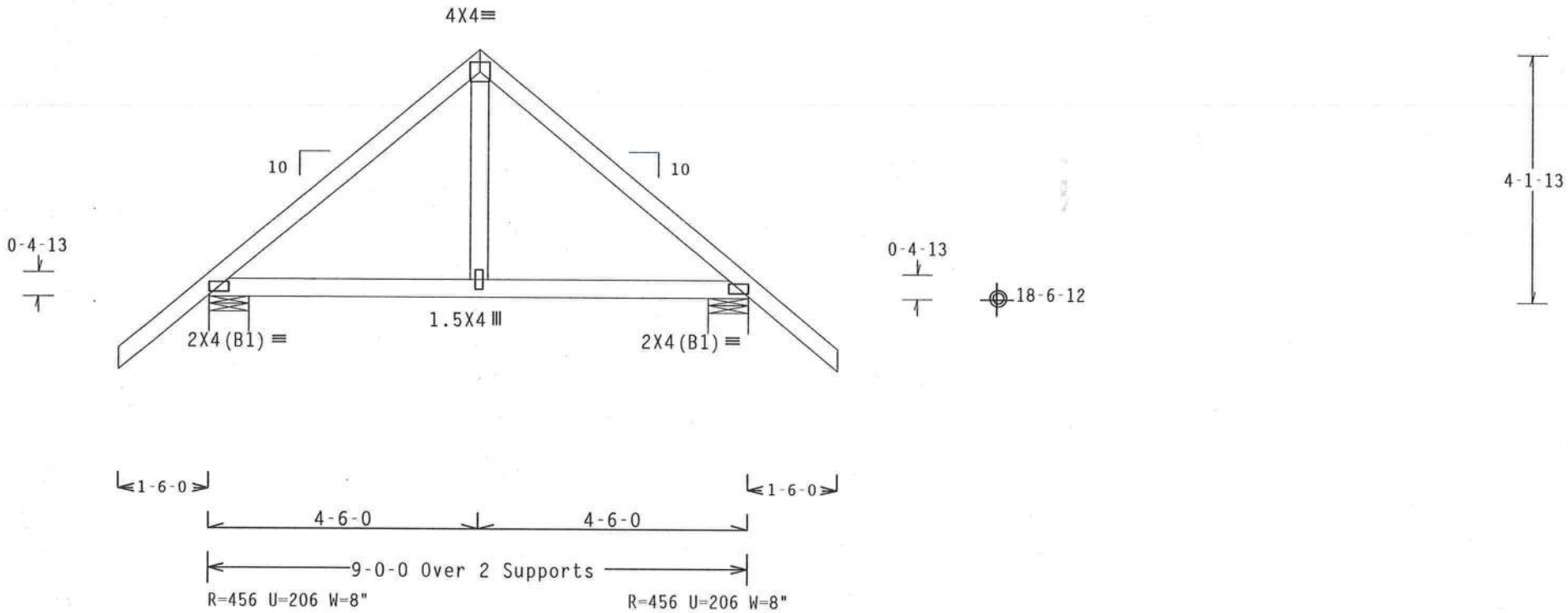

PLT TYP. Wave TPI | Design Crit: TPI-1995(STD)/FBC | 7.04.0805 | 2 | FL/-/3/-/-/R/- | Scale =.375"/Ft.

ALPINE
Alpine Engineered Products, Inc
1950 Marley Drive
Haines City, FL 33844
FL Certificate of Authorization # 567

WARNING TRUSSES REQUIRE EXTREME CARE IN FABRICATION, HANDLING, SHIPPING, INSTALLING AND BRACING. REFER TO BCSI 1-03 (BUILDING COMPONENT SAFETY INFORMATION), PUBLISHED BY TPI (TRUSS PLATE INSTITUTE, 583 D'ONOFRIO DR., SUITE 200, MADISON, WI 53719) AND WTCA (WOOD TRUSS COUNCIL OF AMERICA, 6300 ENTERPRISE LN, MADISON, WI 53719) FOR SAFETY PRACTICES PRIOR TO PERFORMING THESE FUNCTIONS. UNLESS OTHERWISE INDICATED, TOP CHORD SHALL HAVE PROPERLY ATTACHED STRUCTURAL PANELS AND BOTTOM CHORD SHALL HAVE A PROPERLY ATTACHED RIGID CEILING.

IMPORTANT FURNISH A COPY OF THIS DESIGN TO THE INSTALLATION CONTRACTOR. ALPINE ENGINEERED PRODUCTS, INC. SHALL NOT BE RESPONSIBLE FOR ANY DEVIATION FROM THIS DESIGN; ANY FAILURE TO BUILD THE TRUSS IN CONFORMANCE WITH TPI; OR FABRICATING, HANDLING, SHIPPING, INSTALLING & BRACING OF TRUSSES. DESIGN CONFORMS WITH APPLICABLE PROVISIONS OF NDS (NATIONAL DESIGN SPEC. BY AF&PA) AND TPI. ALPINE CONNECTOR PLATES ARE MADE OF 20/18/16GA (W,H/S/K) ASTM A653 GRADE 40/60 (W, K/H,S) GALV. STEEL. APPLY PLATES TO EACH FACE OF TRUSS AND, UNLESS OTHERWISE LOCATED ON THIS DESIGN, POSITION PER DRAWINGS 160A-Z. ANY INSPECTION OF PLATES FOLLOWED BY (1) SHALL BE PER ANNEX A3 OF TPI1-2002 SEC.3. A SEAL ON THIS DRAWING INDICATES ACCEPTANCE OF PROFESSIONAL ENGINEERING RESPONSIBILITY SOLELY FOR THE TRUSS COMPONENT DESIGN SHOWN. THE SUITABILITY AND USE OF THIS COMPONENT FOR ANY BUILDING IS THE RESPONSIBILITY OF THE BUILDING DESIGNER PER ANSI/TPI 1 SEC. 2.

ARTHUR R. FISHER LICENSE No. 59687 STATE OF FLORIDA PROFESSIONAL ENGINEER
Aug 04 2005

TC LL	20.0 PSF	REF	R487-- 93388
TC DL	10.0 PSF	DATE	08/04/05
BC DL	10.0 PSF	DRW	HCUSR487 05216043
BC LL	0.0 PSF	HC-ENG	JB/AF *
TOT.LD.	40.0 PSF	SEQN-	150724
DUR.FAC.	1.25		
SPACING	24.0"	JREF-	1SPC487_Z01

(5-318A-PAUL BROWN/ROOF - G)

THIS DWG PREPARED FROM COMPUTER INPUT (LOADS & DIMENSIONS) SUBMITTED BY TRUSS MFR.

Top chord 2x8 SP SS
Bot chord 2x8 SP SS :B3 2x4 SP #2 Dense:
Webs 2x4 SP #3

Roof overhang supports 2.00 psf soffit load.

BC attic room floor loading: LL = 40.00 psf; DL = 10.00 psf; from 4-0-0 to 16-0-0.

110 mph wind, 12.54 ft mean hgt, ASCE 7-98, CLOSED bldg, Located anywhere in roof, CAT II, EXP B, wind TC DL=2.8 psf, wind BC DL=2.2 psf.

Collar-tie braced with continuous lateral bracing at 24" OC. or rigid ceiling.

Deflection meets L/360 live and L/240 total load.

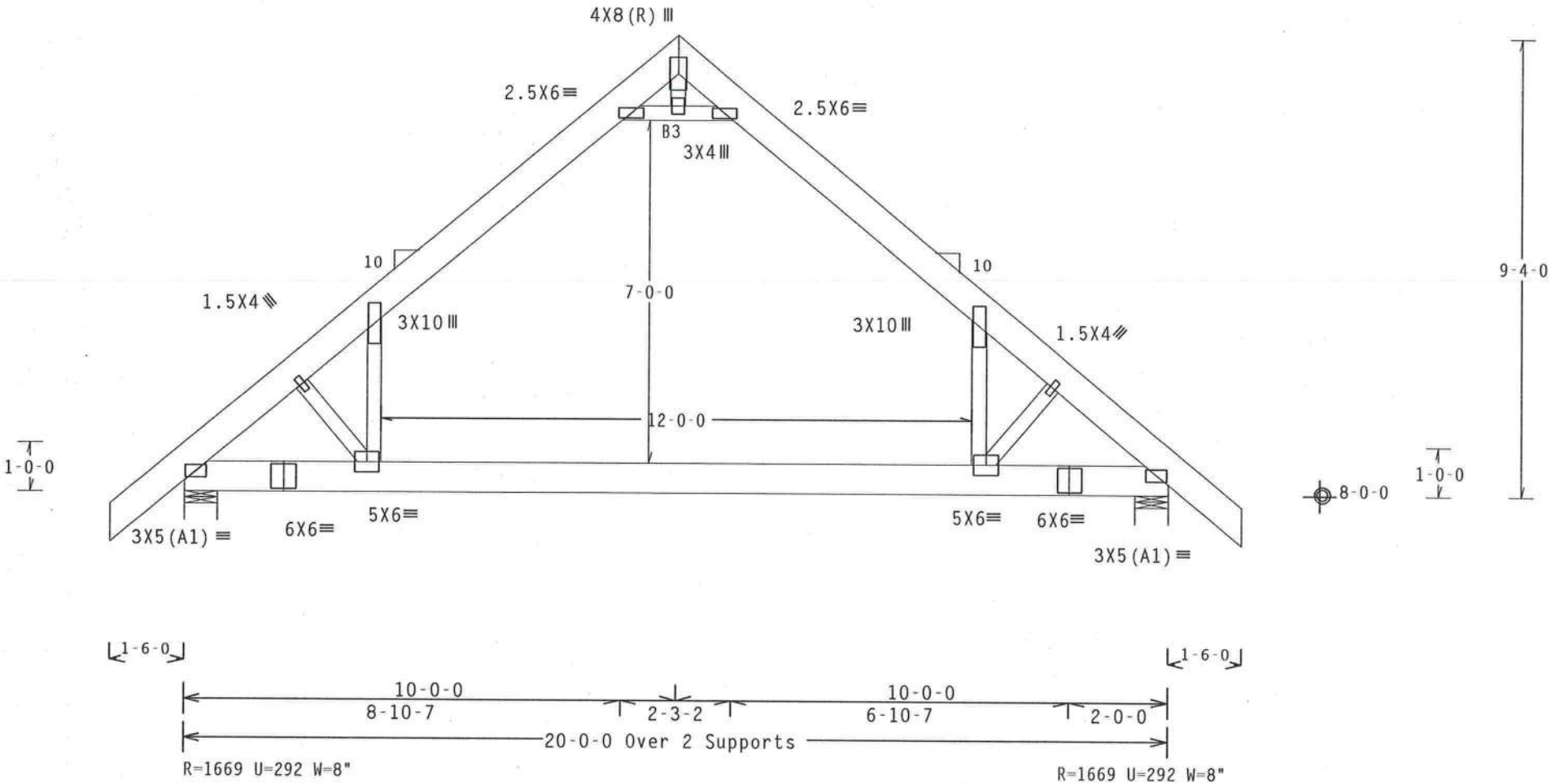

PLT TYP. Wave TPI Design Crit: TPI-1995(STD)/FBC 7.0 [illegible] 05 16 [illegible]:11 FL/-/3/-/-/R/- Scale =.3125"/Ft.

ALPINE

Alpine Engineered Products, Inc.
1950 Marley Drive
Haines City, FL 33844
FL Certificate of Authorization # 567

WARNING TRUSSES REQUIRE EXTREME CARE IN FABRICATION, HANDLING, SHIPPING, INSTALLING AND BRACING. REFER TO BCSI 1-03 (BUILDING COMPONENT SAFETY INFORMATION), PUBLISHED BY TPI (TRUSS PLATE INSTITUTE, 583 D'ONOFRIO DR., SUITE 200, MADISON, WI 53719) AND WTCA (WOOD TRUSS COUNCIL OF AMERICA, 6300 ENTERPRISE LN, MADISON, WI 53719) FOR SAFETY PRACTICES PRIOR TO PERFORMING THESE FUNCTIONS. UNLESS OTHERWISE INDICATED, TOP CHORD SHALL HAVE PROPERLY ATTACHED STRUCTURAL PANELS AND BOTTOM CHORD SHALL HAVE A PROPERLY ATTACHED RIGID CEILING.

IMPORTANTFURNISH A COPY OF THIS DESIGN TO THE INSTALLATION CONTRACTOR. ALPINE ENGINEERED PRODUCTS, INC. SHALL NOT BE RESPONSIBLE FOR ANY DEVIATION FROM THIS DESIGN; ANY FAILURE TO BUILD THE TRUSS IN CONFORMANCE WITH TPI; OR FABRICATING, HANDLING, SHIPPING, INSTALLING & BRACING OF TRUSSES. DESIGN CONFORMS WITH APPLICABLE PROVISIONS OF NDS (NATIONAL DESIGN SPEC. BY AF&PA) AND TPI. ALPINE CONNECTOR PLATES ARE MADE OF 20/18/16GA (W,H/S/K) ASTM A653 GRADE 40/60 (W, K/H,S) GALV. STEEL. APPLY PLATES TO EACH FACE OF TRUSS AND, UNLESS OTHERWISE LOCATED ON THIS DESIGN, POSITION PER DRAWINGS 160A-Z. ANY INSPECTION OF PLATES FOLLOWED BY (1) SHALL BE PER ANNEX A3 OF TPI1-2002 SEC.3. A SEAL ON THIS DRAWING INDICATES ACCEPTANCE OF PROFESSIONAL ENGINEERING RESPONSIBILITY SOLELY FOR THE TRUSS COMPONENT DESIGN SHOWN. THE SUITABILITY AND USE OF THIS COMPONENT FOR ANY BUILDING IS THE RESPONSIBILITY OF THE BUILDING DESIGNER PER ANSI/TPI 1 SEC. 2.

ARTHUR R. FISHER LICENSE No.59687 STATE OF FLORIDA PROFESSIONAL ENGINEER

TC LL	20.0 PSF	REF R487-- 93389
TC DL	10.0 PSF	DATE 08/04/05
BC DL	10.0 PSF	DRW HCUSR487 05216055
BC LL	0.0 PSF	HC-ENG JB/AF
TOT.LD.	40.0 PSF	SEQN- 150969
DUR.FAC.	1.25	
SPACING	24.0"	JREF- 1SPC487_Z01

THIS DWG PREPARED FROM COMPUTER INPUT (LOADS & DIMENSIONS) SUBMITTED BY TRUSS MFR.

Top chord 2x8 SP SS
Bot chord 2x8 SP SS :B3 2x4 SP #2 Dense:
Webs 2x4 SP #3

SPECIAL LOADS
------(LUMBER DUR.FAC.=1.25 / PLATE DUR.FAC.=1.25)

TC - From	75 PLF	at -1.50 to	75 PLF	at 4.00
TC - From	100 PLF	at 4.00 to	100 PLF	at 8.87
TC - From	75 PLF	at 8.87 to	75 PLF	at 11.13
TC - From	100 PLF	at 11.13 to	100 PLF	at 14.00
TC - From	173 PLF	at 14.00 to	199 PLF	at 16.00
TC - From	174 PLF	at 16.00 to	217 PLF	at 19.29
TC - From	75 PLF	at 19.29 to	75 PLF	at 21.50
PLT- From	25 PLF	at 9.17 to	25 PLF	at 10.83
BC - From	5 PLF	at -1.50 to	5 PLF	at 0.00
BC - From	25 PLF	at 0.00 to	25 PLF	at 4.00
BC - From	150 PLF	at 4.00 to	150 PLF	at 16.00
BC - From	25 PLF	at 16.00 to	25 PLF	at 20.00
BC - From	5 PLF	at 20.00 to	5 PLF	at 21.50

TC - 138 LB Conc. Load at 19.29
BC - 74 LB Conc. Load at 4.00, 16.00

In lieu of structural panels or rigid ceiling use purlins to brace TC @ 24" OC, BC @ 48" OC.

110 mph wind, 12.54 ft mean hgt, ASCE 7-98, CLOSED bldg, not located within 5.50 ft from roof edge, CAT II, EXP B, wind TC DL=2.8 psf, wind BC DL=2.2 psf.

Roof overhang supports 2.00 psf soffit load.

Calculated horizontal deflection is 0.19" due to live load and 0.15" due to dead load.

Trusses to be spaced at 30.0" OC maximum.

Collar-tie braced with continuous lateral bracing at 24" OC.

Deflection meets L/360 live and L/240 total load.

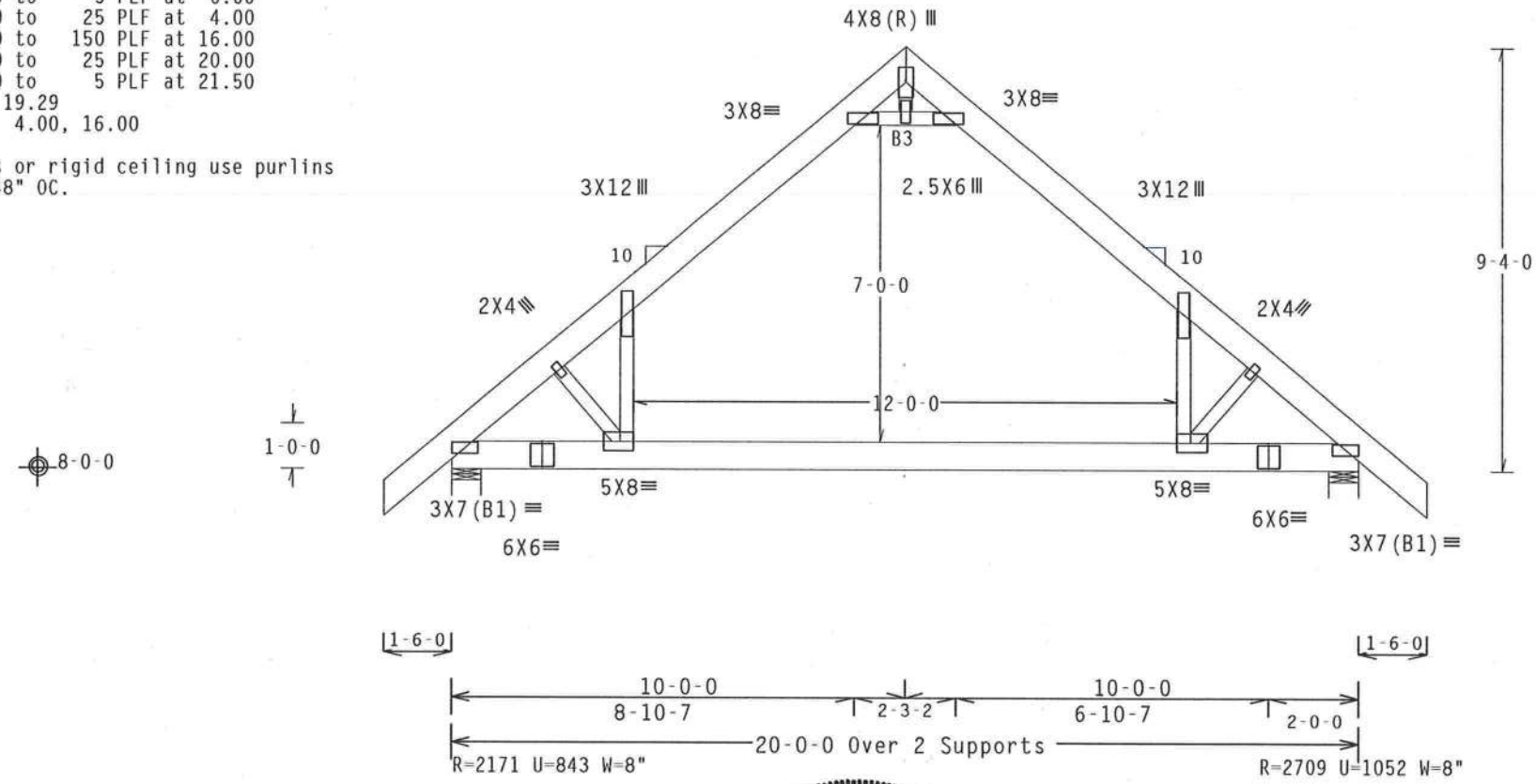

PLT TYP. Wave TPI Design Crit: TPI-1995(STD)/FBC 7.0.0.0805.16 QTY 4 FL/-/3/-/-/R/- Scale =.25"/Ft.

ALPINE
Alpine Engineered Products, Inc.
1950 Marley Drive
Haines City, FL 33844
FL Certificate of Authorization # 567

WARNING TRUSSES REQUIRE EXTREME CARE IN FABRICATION, HANDLING, SHIPPING, INSTALLING AND BRACING. REFER TO BCSI 1-03 (BUILDING COMPONENT SAFETY INFORMATION), PUBLISHED BY TPI (TRUSS PLATE INSTITUTE, 583 D'ONOFRIO DR., SUITE 200, MADISON, WI 53719) AND WTCA (WOOD TRUSS COUNCIL OF AMERICA, 6300 ENTERPRISE LN, MADISON, WI 53719) FOR SAFETY PRACTICES PRIOR TO PERFORMING THESE FUNCTIONS. UNLESS OTHERWISE INDICATED, TOP CHORD SHALL HAVE PROPERLY ATTACHED STRUCTURAL PANELS AND BOTTOM CHORD SHALL HAVE A PROPERLY ATTACHED RIGID CEILING.

IMPORTANTFURNISH A COPY OF THIS DESIGN TO THE INSTALLATION CONTRACTOR. ALPINE ENGINEERED PRODUCTS, INC. SHALL NOT BE RESPONSIBLE FOR ANY DEVIATION FROM THIS DESIGN; ANY FAILURE TO BUILD THE TRUSS IN CONFORMANCE WITH TPI; OR FABRICATING, HANDLING, SHIPPING, INSTALLING & BRACING OF TRUSSES. DESIGN CONFORMS WITH APPLICABLE PROVISIONS OF NDS (NATIONAL DESIGN SPEC, BY AF&PA) AND TPI. ALPINE CONNECTOR PLATES ARE MADE OF 20/18/16GA (W,H/S/K) ASTM A653 GRADE 40/60 (W, K/H,S) GALV. STEEL. APPLY PLATES TO EACH FACE OF TRUSS AND, UNLESS OTHERWISE LOCATED ON THIS DESIGN, POSITION PER DRAWINGS 160A-Z; ANY INSPECTION OF PLATES FOLLOWED BY (I) SHALL BE PER ANNEX A3 OF TPI1-2002 SEC.3. A SEAL ON THIS DRAWING INDICATES ACCEPTANCE OF PROFESSIONAL ENGINEERING RESPONSIBILITY SOLELY FOR THE TRUSS COMPONENT DESIGN SHOWN. THE SUITABILITY AND USE OF THIS COMPONENT FOR ANY BUILDING IS THE RESPONSIBILITY OF THE BUILDING DESIGNER PER ANSI/TPI 1 SEC. 2.

ARTHUR R. FISHER
LICENSE
No. 59687
STATE OF FLORIDA
PROFESSIONAL ENGINEER
AUG 04, '05

TC LL	20.0 PSF	REF R487-- 93390
TC DL	10.0 PSF	DATE 08/04/05
BC DL	10.0 PSF	DRW HCUSR487 05216056
BC LL	0.0 PSF	HC-ENG JB/AF
TOT.LD.	40.0 PSF	SEQN- 151007
DUR.FAC.	1.25	
SPACING	30.0"	JREF- 1SPC487_Z01

(5-318A-PAUL BROWN/ROOF - GGE)

Top chord 2x4 SP #2 Dense :T2, T3 2x8 SP SS:
Bot chord 2x8 SP SS :B3 2x4 SP #2 Dense:
Webs 2x4 SP #3

SPECIAL LOADS
------(LUMBER DUR.FAC.=1.25 / PLATE DUR.FAC.=1.25)

TC - From	81 PLF	at -1.50	to	81 PLF	at 4.00
TC - From	101 PLF	at 4.00	to	101 PLF	at 9.32
TC - From	81 PLF	at 9.32	to	81 PLF	at 10.68
TC - From	101 PLF	at 10.68	to	101 PLF	at 16.00
TC - From	81 PLF	at 16.00	to	81 PLF	at 21.50
PLT- From	20 PLF	at 9.63	to	20 PLF	at 10.37
BC - From	4 PLF	at -1.50	to	4 PLF	at 0.00
BC - From	20 PLF	at 0.00	to	20 PLF	at 4.00
BC - From	120 PLF	at 4.00	to	120 PLF	at 16.00
BC - From	20 PLF	at 16.00	to	20 PLF	at 20.00
BC - From	4 PLF	at 20.00	to	4 PLF	at 21.50

BC - 51 LB Conc. Load at 4.00, 16.00

110 mph wind, 12.35 ft mean hgt, ASCE 7-98, CLOSED bldg, Located anywhere in roof, CAT II, EXP B, wind TC DL=2.8 psf, wind BC DL=2.2 psf.

End verticals not exposed to wind pressure.

Roof overhang supports 2.00 psf soffit load.

Collar-tie braced with continuous lateral bracing at 24" OC. or rigid ceiling.

Deflection meets L/360 live and L/240 total load.

(**) Plate relocated as shown.

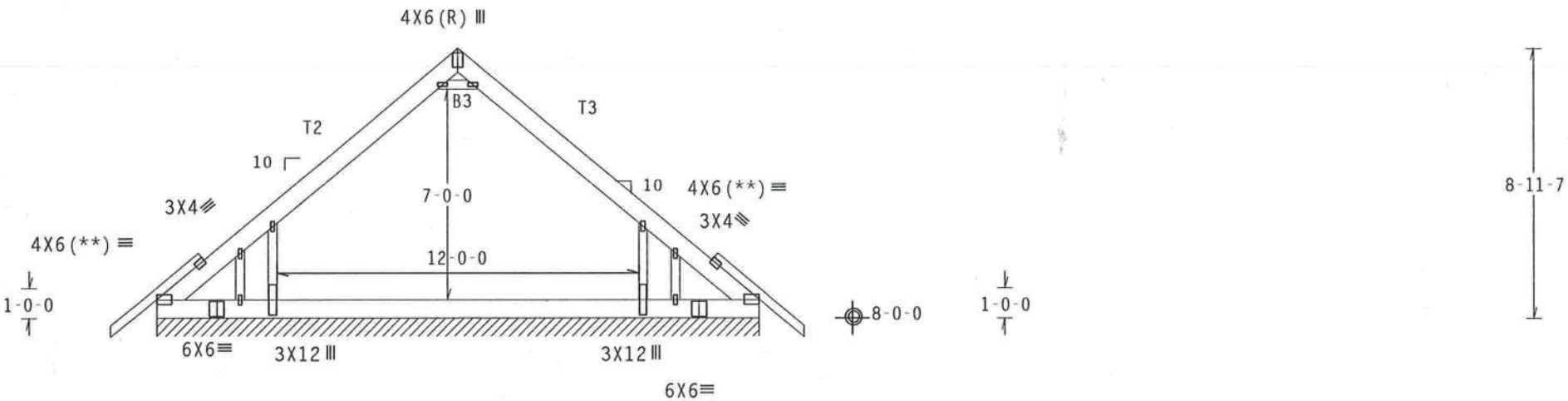

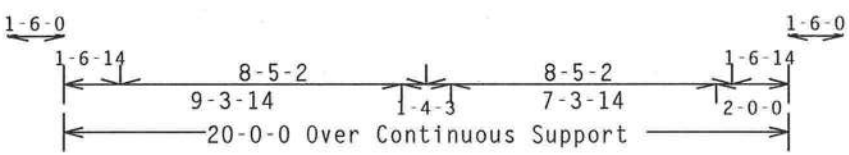

R=190 PLF U=74 PLF W=20-0-0

Note: All Plates Are 1.5X4 Except As Shown.

PLT TYP. Wave TPI | Design Crit: TPI-1995(STD)/FBC | 7.04.0405.16 | FL/-/3/-/-/R/- | Scale =.1875"/Ft.

ALPINE
Alpine Engineered Products, Inc.
1950 Marley Drive
Haines City, FL 33844
FL Certificate of Authorization # 567

WARNING TRUSSES REQUIRE EXTREME CARE IN FABRICATION, HANDLING, SHIPPING, INSTALLING AND BRACING. REFER TO BCSI 1-03 (BUILDING COMPONENT SAFETY INFORMATION), PUBLISHED BY TPI (TRUSS PLATE INSTITUTE, 583 D'ONOFRIO DR., SUITE 200, MADISON, WI 53719) AND WTCA (WOOD TRUSS COUNCIL OF AMERICA, 6300 ENTERPRISE LN, MADISON, WI 53719) FOR SAFETY PRACTICES PRIOR TO PERFORMING THESE FUNCTIONS. UNLESS OTHERWISE INDICATED, TOP CHORD SHALL HAVE PROPERLY ATTACHED STRUCTURAL PANELS AND BOTTOM CHORD SHALL HAVE A PROPERLY ATTACHED RIGID CEILING.

IMPORTANT FURNISH A COPY OF THIS DESIGN TO THE INSTALLATION CONTRACTOR. ALPINE ENGINEERED PRODUCTS, INC. SHALL NOT BE RESPONSIBLE FOR ANY DEVIATION FROM THIS DESIGN; ANY FAILURE TO BUILD THE TRUSS IN CONFORMANCE WITH TPI; OR FABRICATING, HANDLING, SHIPPING, INSTALLING & BRACING OF TRUSSES. DESIGN CONFORMS WITH APPLICABLE PROVISIONS OF NDS (NATIONAL DESIGN SPEC, BY AF&PA) AND TPI. ALPINE CONNECTOR PLATES ARE MADE OF 20/18/16GA (W,H/S/K) ASTM A653 GRADE 40/60 (W, K/H,S) GALV. STEEL. APPLY PLATES TO EACH FACE OF TRUSS AND, UNLESS OTHERWISE LOCATED ON THIS DESIGN, POSITION PER DRAWINGS 160A-Z. ANY INSPECTION OF PLATES FOLLOWED BY (1) SHALL BE PER ANNEX A3 OF TPI1-2002 SEC.3. A SEAL ON THIS DRAWING INDICATES ACCEPTANCE OF PROFESSIONAL ENGINEERING RESPONSIBILITY SOLELY FOR THE TRUSS COMPONENT DESIGN SHOWN. THE SUITABILITY AND USE OF THIS COMPONENT FOR ANY BUILDING IS THE RESPONSIBILITY OF THE BUILDING DESIGNER PER ANSI/TPI 1 SEC. 2.

ARTHUR R. FISHER LICENSE No.59687 STATE OF FLORIDA PROFESSIONAL ENGINEER
Aug 04, 05

TC LL	20.0 PSF	REF	R487-- 93391
TC DL	10.0 PSF	DATE	08/04/05
BC DL	10.0 PSF	DRW	HCUSR487 05216057
BC LL	0.0 PSF	HC-ENG	JB/AF
TOT.LD.	40.0 PSF	SEQN-	151039
DUR.FAC.	1.25		
SPACING	24.0"	JREF-	1SPC487_Z01

THIS DWG PREPARED FROM COMPUTER INPUT (LOADS & DIMENSIONS) SUBMITTED BY TRUSS MFR.

Top chord 2x4 SP #2 Dense
Bot chord 2x4 SP #2 Dense

Deflection meets L/360 live and L/240 total load.

110 mph wind, 20.25 ft mean hgt, ASCE 7-98, CLOSED bldg, not located within 4.50 ft from roof edge, CAT II, EXP B, wind TC DL=2.8 psf, wind BC DL=2.2 psf.

Provide (2) 16d common nails(0.162"x3.5"), toe nailed at Top chord.
Provide (2) 16d common nails(0.162"x3.5"), toe nailed at Bot chord.

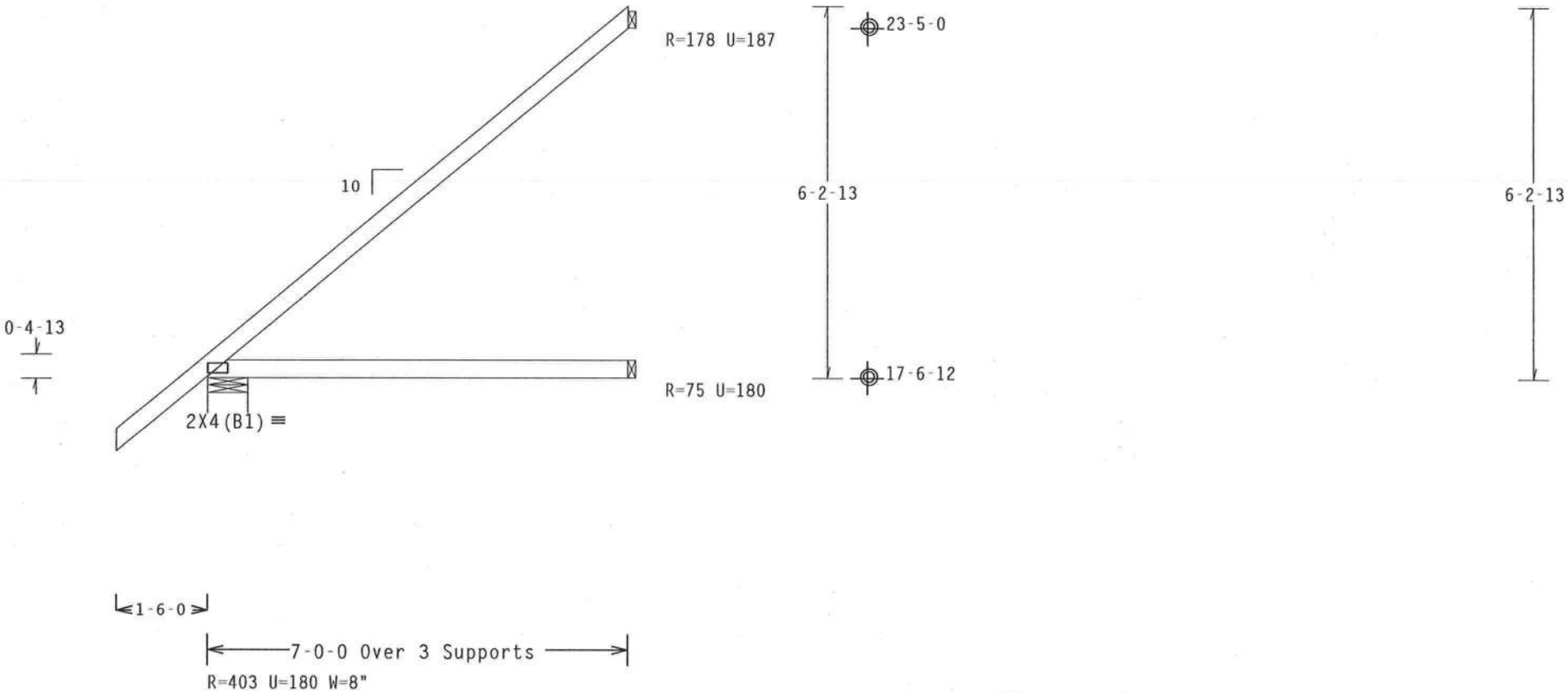

PLT TYP. Wave TPI Design Crit: TPI-1995(STD)/FBC 7.04 [illegible] FL/-/3/-/-/R/- Scale =.375"/Ft.

ALPINE
Alpine Engineered Products, Inc
1950 Marley Drive
Haines City, FL 33844
FL Certificate of Authorization # 567

WARNING TRUSSES REQUIRE EXTREME CARE IN FABRICATION, HANDLING, SHIPPING, INSTALLING AND BRACING. REFER TO BCSI 1-03 (BUILDING COMPONENT SAFETY INFORMATION), PUBLISHED BY TPI (TRUSS PLATE INSTITUTE, 583 D'ONOFRIO DR., SUITE 200, MADISON, WI 53719) AND WTCA (WOOD TRUSS COUNCIL OF AMERICA, 6300 ENTERPRISE LN. MADISON, WI 53719) FOR SAFETY PRACTICES PRIOR TO PERFORMING THESE FUNCTIONS. UNLESS OTHERWISE INDICATED, TOP CHORD SHALL HAVE PROPERLY ATTACHED STRUCTURAL PANELS AND BOTTOM CHORD SHALL HAVE A PROPERLY ATTACHED RIGID CEILING.

IMPORTANT FURNISH A COPY OF THIS DESIGN TO THE INSTALLATION CONTRACTOR. ALPINE ENGINEERED PRODUCTS, INC. SHALL NOT BE RESPONSIBLE FOR ANY DEVIATION FROM THIS DESIGN; ANY FAILURE TO BUILD THE TRUSS IN CONFORMANCE WITH TPI; OR FABRICATING, HANDLING, SHIPPING, INSTALLING & BRACING OF TRUSSES. DESIGN CONFORMS WITH APPLICABLE PROVISIONS OF NDS (NATIONAL DESIGN SPEC, BY AF&PA) AND TPI. ALPINE CONNECTOR PLATES ARE MADE OF 20/18/16GA (W,H/S/K) ASTM A653 GRADE 40/60 (W, K/H,S) GALV. STEEL. APPLY PLATES TO EACH FACE OF TRUSS AND, UNLESS OTHERWISE LOCATED ON THIS DESIGN, POSITION PER DRAWINGS 160A-Z.- ANY INSPECTION OF PLATES FOLLOWED BY (1) SHALL BE PER ANNEX A3 OF TP11-2002 SEC.3. A SEAL ON THIS DRAWING INDICATES ACCEPTANCE OF PROFESSIONAL ENGINEERING RESPONSIBILITY SOLELY FOR THE TRUSS COMPONENT DESIGN SHOWN. THE SUITABILITY AND USE OF THIS COMPONENT FOR ANY BUILDING IS THE RESPONSIBILITY OF THE BUILDING DESIGNER PER ANSI/TPI 1 SEC. 2.

ARTHUR R. FISHER LICENSE No.59687 STATE OF FLORIDA PROFESSIONAL ENGINEER
AUG 04 '05

TC LL	20.0 PSF	REF R487-- 93392
TC DL	10.0 PSF	DATE 08/04/05
BC DL	10.0 PSF	DRW HCUSR487 05216058
BC LL	0.0 PSF	HC-ENG JB/AF
TOT.LD.	40.0 PSF	SEQN- 150646
DUR.FAC.	1.25	
SPACING	24.0"	JREF- 1SPC487_Z01

THIS DWG PREPARED FROM COMPUTER INPUT (LOADS & DIMENSIONS) SUBMITTED BY TRUSS-MFR.

Top chord 2x4 SP #2 Dense
Bot chord 2x4 SP #2 Dense

Deflection meets L/360 live and L/240 total load.

110 mph wind, 19.42 ft mean hgt, ASCE 7-98, CLOSED bldg, not located within 4.50 ft from roof edge, CAT II, EXP B, wind TC DL=2.8 psf, wind BC DL=2.2 psf.

Provide (2) 16d common nails(0.162"x3.5"), toe nailed at Top chord.
Provide (2) 16d common nails(0.162"x3.5"), toe nailed at Bot chord.

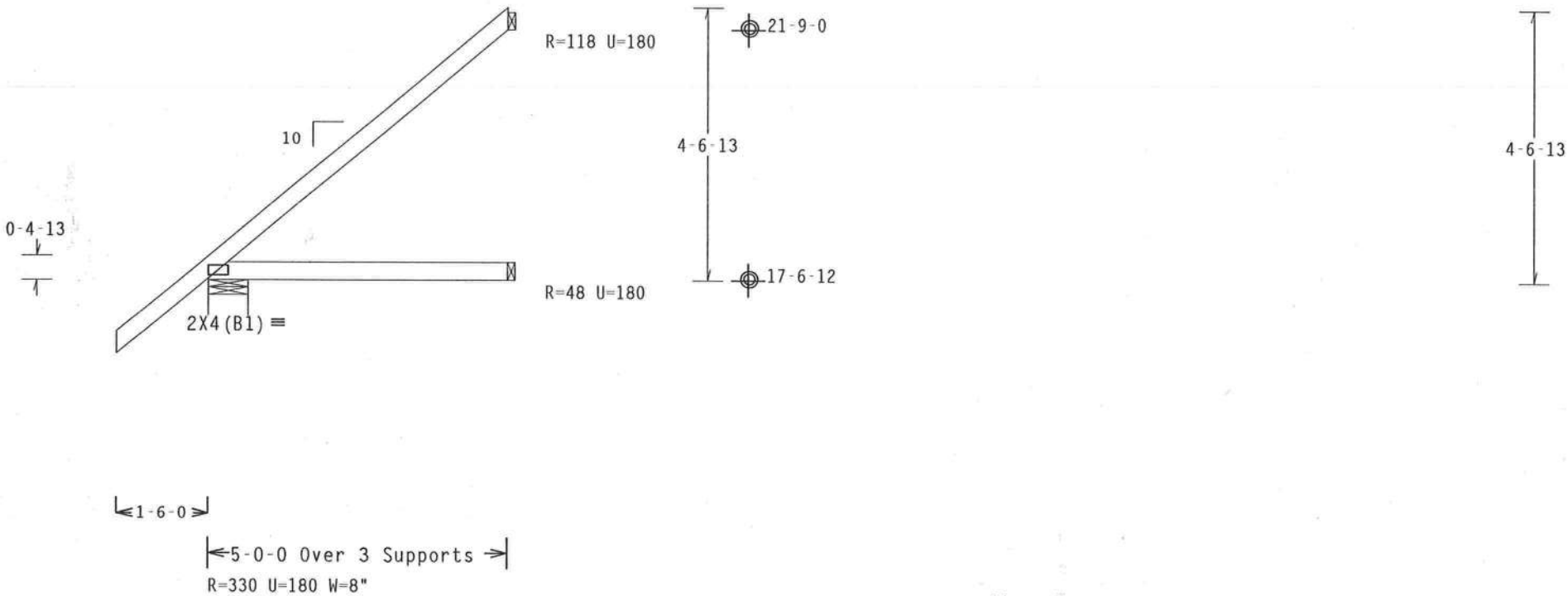

PLT TYP. Wave TPI Design Crit: TPI-1995(STD)/FBC 7.0.0.0395.16 QTY:10 FL/-/3/-/-/R/- Scale =.375"/Ft.

ALPINE

Alpine Engineered Products, Inc
1950 Marley Drive
Haines City, FL 33844
FL Certificate of Authorization # 567

WARNING TRUSSES REQUIRE EXTREME CARE IN FABRICATION, HANDLING, SHIPPING, INSTALLING AND BRACING. REFER TO BCSI 1-03 (BUILDING COMPONENT SAFETY INFORMATION), PUBLISHED BY TPI (TRUSS PLATE INSTITUTE, 583 D'ONOFRIO DR., SUITE 200, MADISON, WI 53719) AND WTCA (WOOD TRUSS COUNCIL OF AMERICA, 6300 ENTERPRISE LN., MADISON, WI 53719) FOR SAFETY PRACTICES PRIOR TO PERFORMING THESE FUNCTIONS. UNLESS OTHERWISE INDICATED, TOP CHORD SHALL HAVE PROPERLY ATTACHED STRUCTURAL PANELS AND BOTTOM CHORD SHALL HAVE A PROPERLY ATTACHED RIGID CEILING.

IMPORTANT FURNISH A COPY OF THIS DESIGN TO THE INSTALLATION CONTRACTOR. ALPINE ENGINEERED PRODUCTS, INC. SHALL NOT BE RESPONSIBLE FOR ANY DEVIATION FROM THIS DESIGN; ANY FAILURE TO BUILD THE TRUSS IN CONFORMANCE WITH TPI; OR FABRICATING, HANDLING, SHIPPING, INSTALLING & BRACING OF TRUSSES. DESIGN CONFORMS WITH APPLICABLE PROVISIONS OF NDS (NATIONAL DESIGN SPEC, BY AF&PA) AND TPI. ALPINE CONNECTOR PLATES ARE MADE OF 20/18/16GA (W,H/S/K) ASTM A653 GRADE 40/60 (W, K/H,S) GALV. STEEL. APPLY PLATES TO EACH FACE OF TRUSS AND, UNLESS OTHERWISE LOCATED ON THIS DESIGN, POSITION PER DRAWINGS 160A-Z. ANY INSPECTION OF PLATES FOLLOWED BY (1) SHALL BE PER ANNEX A3 OF TPI1-2002 SEC.3. A SEAL ON THIS DRAWING INDICATES ACCEPTANCE OF PROFESSIONAL ENGINEERING RESPONSIBILITY SOLELY FOR THE TRUSS COMPONENT DESIGN SHOWN. THE SUITABILITY AND USE OF THIS COMPONENT FOR ANY BUILDING IS THE RESPONSIBILITY OF THE BUILDING DESIGNER PER ANSI/TPI 1 SEC. 2.

ARTHUR R. FISHER LICENSE No 59687 STATE OF FLORIDA PROFESSIONAL ENGINEER

TC LL	20.0 PSF	REF R487-- 93393
TC DL	10.0 PSF	DATE 08/04/05
BC DL	10.0 PSF	DRW HCUSR487 05216059
BC LL	0.0 PSF	HC-ENG JB/AF
TOT.LD.	40.0 PSF	SEQN- 150652
DUR.FAC.	1.25	
SPACING	24.0"	JREF- 1SPC487_Z01

(5-318A-PAUL BROWN/ROOF - HJ7)

THIS DWG PREPARED FROM COMPUTER INPUT (LOADS & DIMENSIONS) SUBMITTED BY TRUSS MFR.

Top chord 2x4 SP #2 Dense
Bot chord 2x4 SP #2 Dense
Webs 2x4 SP #3

Hipjack supports 7-0-0 setback jacks with no webs.

Provide (2) 16d common nails(0.162"x3.5"), toe nailed at Top chord.
Provide (3) 16d common nails(0.162"x3.5"), toe nailed at Bot chord.

110 mph wind, 20.22 ft mean hgt, ASCE 7-98, CLOSED bldg, Located anywhere in roof, CAT II, EXP B, wind TC DL=2.8 psf, wind BC DL=2.2 psf.

Deflection meets L/360 live and L/240 total load.

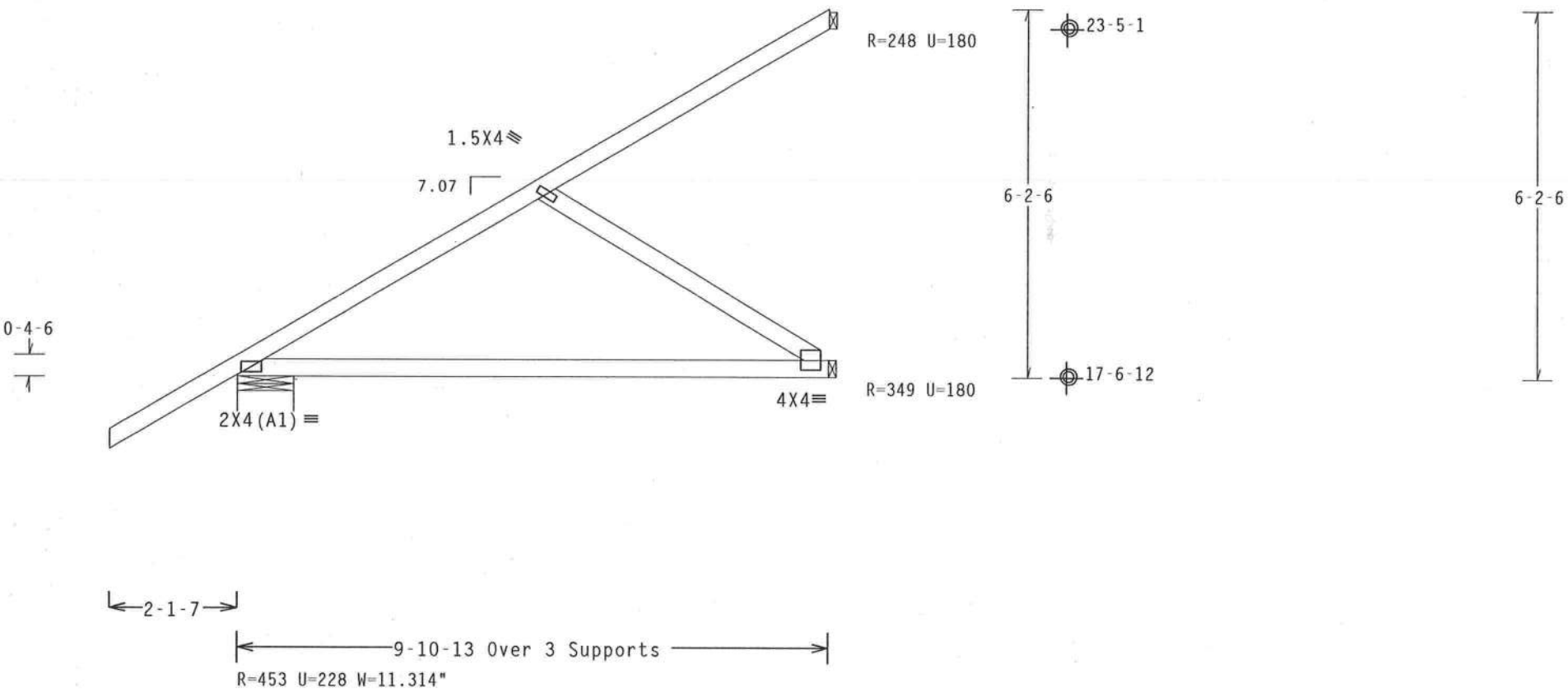

PLT TYP. Wave TPI | Design Crit: TPI-1995(STD)/FBC | 7.04 [illegible] | FL/-/3/-/-/R/- | Scale =.375"/Ft.

ALPINE

Alpine Engineered Products, Inc
1950 Marley Drive
Haines City, FL 33844
FL Certificate of Authorization # 567

WARNING TRUSSES REQUIRE EXTREME CARE IN FABRICATION, HANDLING, SHIPPING, INSTALLING AND BRACING. REFER TO BCSI 1-03 (BUILDING COMPONENT SAFETY INFORMATION), PUBLISHED BY TPI (TRUSS PLATE INSTITUTE, 583 D'ONOFRIO DR., SUITE 200, MADISON, WI 53719) AND WTCA (WOOD TRUSS COUNCIL OF AMERICA, 6300 ENTERPRISE LN, MADISON, WI 53719) FOR SAFETY PRACTICES PRIOR TO PERFORMING THESE FUNCTIONS. UNLESS OTHERWISE INDICATED, TOP CHORD SHALL HAVE PROPERLY ATTACHED STRUCTURAL PANELS AND BOTTOM CHORD SHALL HAVE A PROPERLY ATTACHED RIGID CEILING.

IMPORTANT FURNISH A COPY OF THIS DESIGN TO THE INSTALLATION CONTRACTOR. ALPINE ENGINEERED PRODUCTS, INC. SHALL NOT BE RESPONSIBLE FOR ANY DEVIATION FROM THIS DESIGN; ANY FAILURE TO BUILD THE TRUSS IN CONFORMANCE WITH TPI; OR FABRICATING, HANDLING, SHIPPING, INSTALLING & BRACING OF TRUSSES. DESIGN CONFORMS WITH APPLICABLE PROVISIONS OF NDS (NATIONAL DESIGN SPEC. BY AF&PA) AND TPI. ALPINE CONNECTOR PLATES ARE MADE OF 20/18/16GA (W,H/S/K) ASTM A653 GRADE 40/60 (W, K/H,S) GALV. STEEL. APPLY PLATES TO EACH FACE OF TRUSS AND, UNLESS OTHERWISE LOCATED ON THIS DESIGN, POSITION PER DRAWINGS 160A-Z. ANY INSPECTION OF PLATES FOLLOWED BY (1) SHALL BE PER ANNEX A3 OF TPI1-2002 SEC.3. A SEAL ON THIS DRAWING INDICATES ACCEPTANCE OF PROFESSIONAL ENGINEERING RESPONSIBILITY SOLELY FOR THE TRUSS COMPONENT DESIGN SHOWN. THE SUITABILITY AND USE OF THIS COMPONENT FOR ANY BUILDING IS THE RESPONSIBILITY OF THE BUILDING DESIGNER PER ANSI/TPI 1 SEC. 2.

ARTHUR R. FISHER
LICENSE
No. 59687
Aug 04 '05
STATE OF FLORIDA
PROFESSIONAL ENGINEER

TC LL	20.0 PSF	REF	R487-- 93394
TC DL	10.0 PSF	DATE	08/04/05
BC DL	10.0 PSF	DRW	HCUSR487 05216060
BC LL	0.0 PSF	HC-ENG	JB/AF
TOT.LD.	40.0 PSF	SEQN-	150686
DUR.FAC.	1.25		
SPACING	24.0"	JREF-	1SPC487_Z01

THIS DWG PREPARED FROM COMPUTER INPUT (LOADS & DIMENSIONS) SUBMITTED BY TRUSS MFR.

Top chord 2x4 SP #2 Dense
Bot chord 2x4 SP #2 Dense

Deflection meets L/360 live and L/240 total load.

110 mph wind, 18.59 ft mean hgt, ASCE 7-98, CLOSED bldg, Located anywhere in roof, CAT II, EXP B, wind TC DL=2.8 psf, wind BC DL=2.2 psf.

Provide (2) 16d common nails(0.162"x3.5"), toe nailed at Top chord.
Provide (2) 16d common nails(0.162"x3.5"), toe nailed at Bot chord.

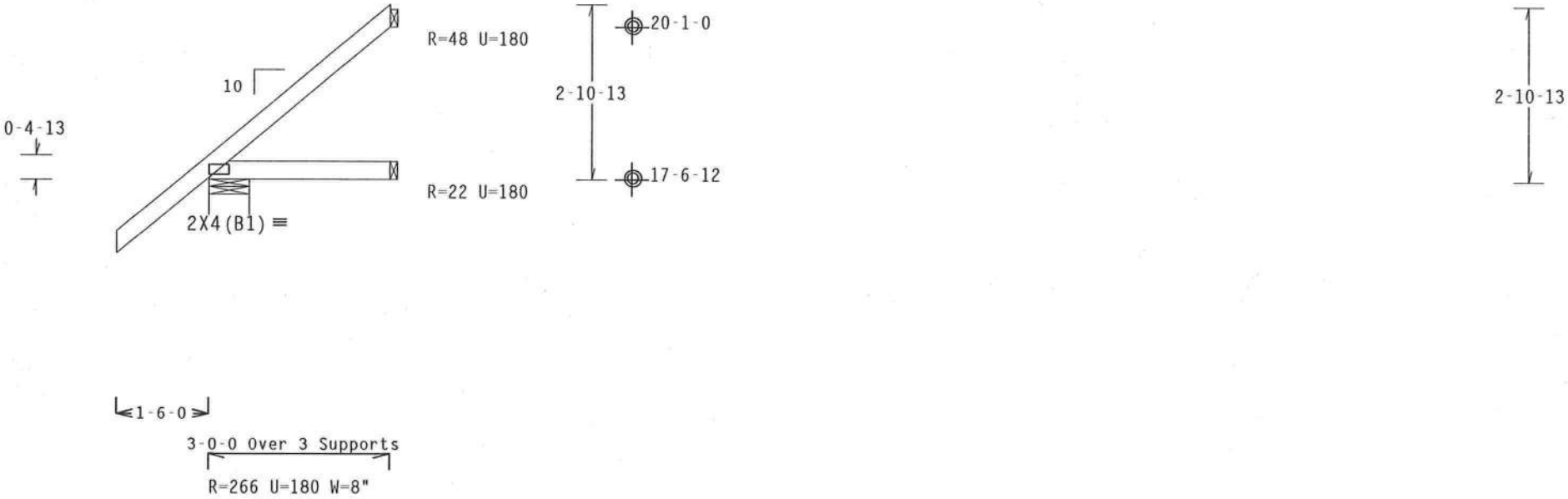

PLT TYP. Wave TPI Design Crit: TPI-1995(STD)/FBC 7.04 [illegible] 10 FL/-/3/-/-/R/- Scale =.375"/Ft.

ALPINE

Alpine Engineered Products, Inc
1950 Marley Drive
Haines City, FL 33844
FL Certificate of Authorization # 567

WARNING TRUSSES REQUIRE EXTREME CARE IN FABRICATION, HANDLING, SHIPPING, INSTALLING AND BRACING. REFER TO BCSI 1-03 (BUILDING COMPONENT SAFETY INFORMATION), PUBLISHED BY TPI (TRUSS PLATE INSTITUTE, 583 D'ONOFRIO DR., SUITE 200, MADISON, WI 53719) AND WTCA (WOOD TRUSS COUNCIL OF AMERICA, 6300 ENTERPRISE LN, MADISON, WI 53719) FOR SAFETY PRACTICES PRIOR TO PERFORMING THESE FUNCTIONS. UNLESS OTHERWISE INDICATED, TOP CHORD SHALL HAVE PROPERLY ATTACHED STRUCTURAL PANELS AND BOTTOM CHORD SHALL HAVE A PROPERLY ATTACHED RIGID CEILING.

IMPORTANT FURNISH A COPY OF THIS DESIGN TO THE INSTALLATION CONTRACTOR. ALPINE ENGINEERED PRODUCTS, INC. SHALL NOT BE RESPONSIBLE FOR ANY DEVIATION FROM THIS DESIGN; ANY FAILURE TO BUILD THE TRUSS IN CONFORMANCE WITH TPI; OR FABRICATING, HANDLING, SHIPPING, INSTALLING & BRACING OF TRUSSES. DESIGN CONFORMS WITH APPLICABLE PROVISIONS OF NDS (NATIONAL DESIGN SPEC, BY AF&PA) AND TPI. ALPINE CONNECTOR PLATES ARE MADE OF 20/18/16GA (W,H/S/K) ASTM A653 GRADE 40/60 (W, K/H,S) GALV. STEEL. APPLY PLATES TO EACH FACE OF TRUSS AND, UNLESS OTHERWISE LOCATED ON THIS DESIGN, POSITION PER DRAWINGS 160A-Z. ANY INSPECTION OF PLATES FOLLOWED BY (1) SHALL BE PER ANNEX A3 OF TPI1-2002 SEC.3. A SEAL ON THIS DRAWING INDICATES ACCEPTANCE OF PROFESSIONAL ENGINEERING RESPONSIBILITY SOLELY FOR THE TRUSS COMPONENT DESIGN SHOWN. THE SUITABILITY AND USE OF THIS COMPONENT FOR ANY BUILDING IS THE RESPONSIBILITY OF THE BUILDING DESIGNER PER ANSI/TPI 1 SEC. 2.

ARTHUR R. FISHER
LICENSE
No. 59687
[illegible] 05
STATE OF
FLORIDA
PROFESSIONAL ENGINEER

TC LL	20.0 PSF	REF	R487-- 93395
TC DL	10.0 PSF	DATE	08/04/05
BC DL	10.0 PSF	DRW	HCUSR487 05216061
BC LL	0.0 PSF	HC-ENG	JB/AF
TOT.LD.	40.0 PSF	SEQN-	150658
DUR.FAC.	1.25		
SPACING	24.0"	JREF-	1SPC487_Z01

THIS DWG PREPARED FROM COMPUTER INPUT (LOADS & DIMENSIONS) SUBMITTED BY TRUSS MFR.

Top chord 2x4 SP #2 Dense
Bot chord 2x4 SP #2 Dense

Hipjack supports 5-0-0 setback jacks with no webs.

Provide (2) 16d common nails(0.162"x3.5"), toe nailed at Top chord.
Provide (2) 16d common nails(0.162"x3.5"), toe nailed at Bot chord.

110 mph wind, 19.38 ft mean hgt, ASCE 7-98, CLOSED bldg, Located anywhere in roof, CAT II, EXP B, wind TC DL=2.8 psf, wind BC DL=2.2 psf.

Deflection meets L/360 live and L/240 total load.

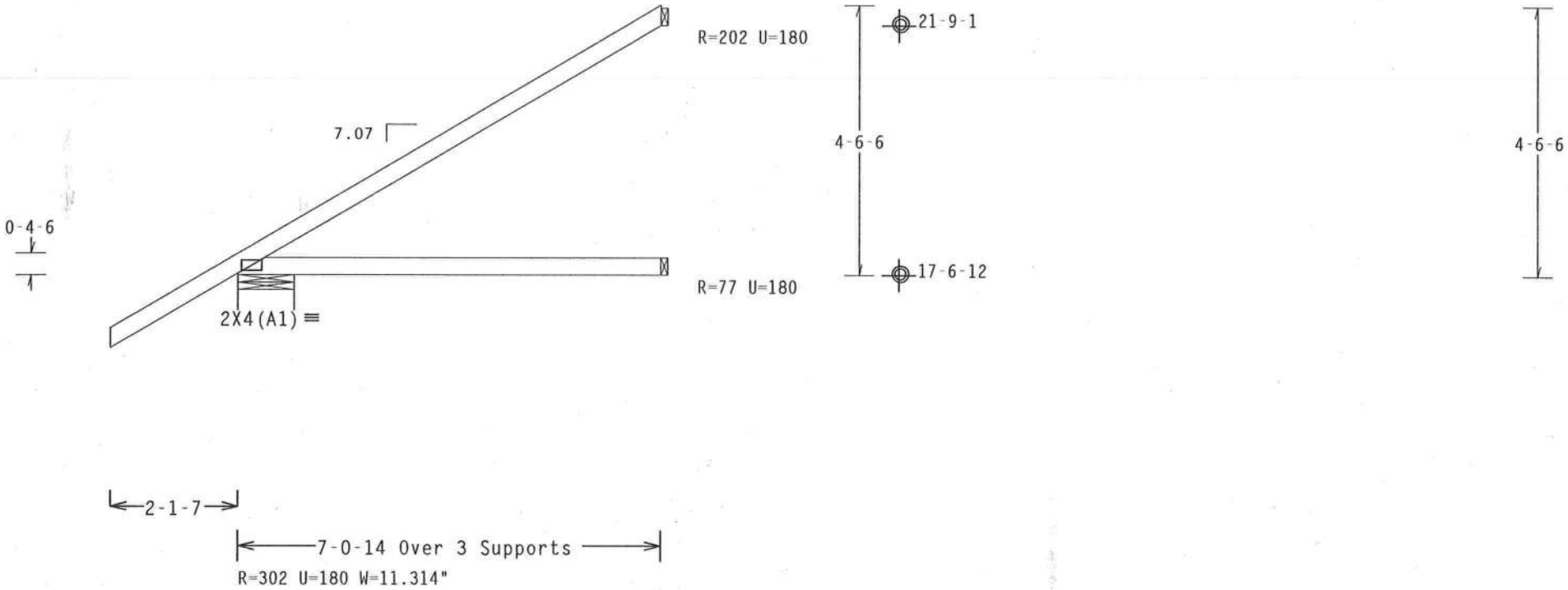

PLT TYP. Wave TPI | Design Crit: TPI-1995(STD)/FBC | 7.04 [illegible] 2 | FL/-/3/-/-/R/- | Scale =.375"/Ft.

ALPINE

Alpine Engineered Products, Inc
1950 Marley Drive
Haines City, FL 33844
FL Certificate of Authorization # 567

WARNING TRUSSES REQUIRE EXTREME CARE IN FABRICATION, HANDLING, SHIPPING, INSTALLING AND BRACING. REFER TO BCSI 1-03 (BUILDING COMPONENT SAFETY INFORMATION), PUBLISHED BY TPI (TRUSS PLATE INSTITUTE, 583 D'ONOFRIO DR., SUITE 200, MADISON, WI 53719) AND WTCA (WOOD TRUSS COUNCIL OF AMERICA, 6300 ENTERPRISE LN, MADISON, WI 53719) FOR SAFETY PRACTICES PRIOR TO PERFORMING THESE FUNCTIONS. UNLESS OTHERWISE INDICATED, TOP CHORD SHALL HAVE PROPERLY ATTACHED STRUCTURAL PANELS AND BOTTOM CHORD SHALL HAVE A PROPERLY ATTACHED RIGID CEILING.

IMPORTANT FURNISH A COPY OF THIS DESIGN TO THE INSTALLATION CONTRACTOR. ALPINE ENGINEERED PRODUCTS, INC. SHALL NOT BE RESPONSIBLE FOR ANY DEVIATION FROM THIS DESIGN; ANY FAILURE TO BUILD THE TRUSS IN CONFORMANCE WITH TPI; OR FABRICATING, HANDLING, SHIPPING, INSTALLING & BRACING OF TRUSSES. DESIGN CONFORMS WITH APPLICABLE PROVISIONS OF NDS (NATIONAL DESIGN SPEC, BY AF&PA) AND TPI. ALPINE CONNECTOR PLATES ARE MADE OF 20/18/16GA (W,H/S/K) ASTM A653 GRADE 40/60 (W, K/H,S) GALV. STEEL. APPLY PLATES TO EACH FACE OF TRUSS AND, UNLESS OTHERWISE LOCATED ON THIS DESIGN, POSITION PER DRAWINGS 160A-Z. ANY INSPECTION OF PLATES FOLLOWED BY (I) SHALL BE PER ANNEX A3 OF TPI1-2002 SEC.3. A SEAL ON THIS DRAWING INDICATES ACCEPTANCE OF PROFESSIONAL ENGINEERING RESPONSIBILITY SOLELY FOR THE TRUSS COMPONENT DESIGN SHOWN. THE SUITABILITY AND USE OF THIS COMPONENT FOR ANY BUILDING IS THE RESPONSIBILITY OF THE BUILDING DESIGNER PER ANSI/TPI 1 SEC. 2.

ARTHUR R. FISHER
LICENSE
No. 59687
Aug 04 '05
STATE OF FLORIDA
PROFESSIONAL ENGINEER

TC LL	20.0 PSF	REF	R487-- 93396
TC DL	10.0 PSF	DATE	08/04/05
BC DL	10.0 PSF	DRW	HCUSR487 05216062
BC LL	0.0 PSF	HC-ENG	JB/AF
TOT.LD.	40.0 PSF	SEQN-	150690
DUR.FAC.	1.25		
SPACING	24.0"	JREF-	1SPC487_Z01

(5-318A-PAUL BROWN/ROOF - CJ1)

Top chord 2x4 SP #2 Dense
Bot chord 2x4 SP #2 Dense

Deflection meets L/360 live and L/240 total load.

110 mph wind, 17.75 ft mean hgt, ASCE 7-98, CLOSED bldg, Located anywhere in roof, CAT II, EXP B, wind TC DL=2.8 psf, wind BC DL=2.2 psf.

Provide (2) 16d common nails(0.162"x3.5"), toe nailed at Top chord.
Provide (2) 16d common nails(0.162"x3.5"), toe nailed at Bot chord.

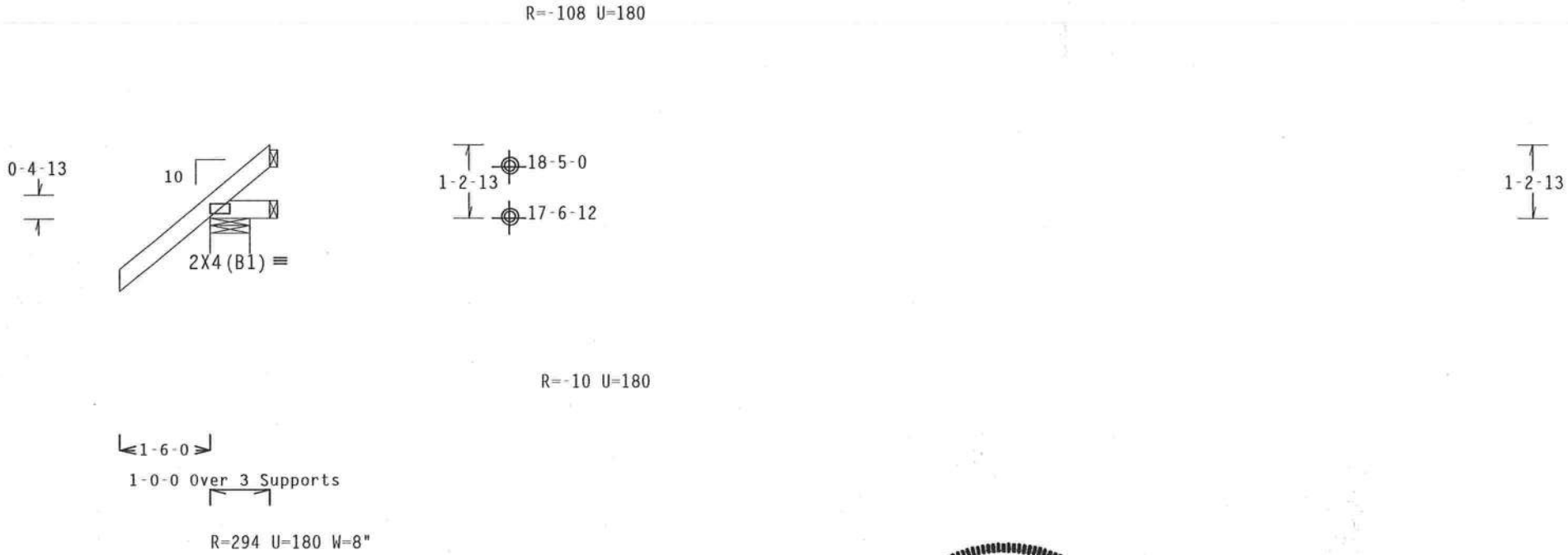

PLT TYP. Wave TPI Design Crit: TPI-1995(STD)/FBC 7.04 [illegible] 10 FL/-/3/-/-/R/- Scale =.375"/Ft.

ALPINE

Alpine Engineered Products, Inc
1950 Marley Drive
Haines City, FL 33844
FL Certificate of Authorization # 567

WARNING TRUSSES REQUIRE EXTREME CARE IN FABRICATION, HANDLING, SHIPPING, INSTALLING AND BRACING. REFER TO BCSI 1-03 (BUILDING COMPONENT SAFETY INFORMATION), PUBLISHED BY TPI (TRUSS PLATE INSTITUTE, 583 D'ONOFRIO DR., SUITE 200, MADISON, WI 53719) AND WTCA (WOOD TRUSS COUNCIL OF AMERICA, 6300 ENTERPRISE LN, MADISON, WI 53719) FOR SAFETY PRACTICES PRIOR TO PERFORMING THESE FUNCTIONS. UNLESS OTHERWISE INDICATED, TOP CHORD SHALL HAVE PROPERLY ATTACHED STRUCTURAL PANELS AND BOTTOM CHORD SHALL HAVE A PROPERLY ATTACHED RIGID CEILING.

IMPORTANT FURNISH A COPY OF THIS DESIGN TO THE INSTALLATION CONTRACTOR. ALPINE ENGINEERED PRODUCTS, INC. SHALL NOT BE RESPONSIBLE FOR ANY DEVIATION FROM THIS DESIGN; ANY FAILURE TO BUILD THE TRUSS IN CONFORMANCE WITH TPI; OR FABRICATING, HANDLING, SHIPPING, INSTALLING & BRACING OF TRUSSES. DESIGN CONFORMS WITH APPLICABLE PROVISIONS OF NDS (NATIONAL DESIGN SPEC, BY AF&PA) AND TPI. ALPINE CONNECTOR PLATES ARE MADE OF 20/18/16GA (W,H/S/K) ASTM A653 GRADE 40/60 (W, K/H,S) GALV. STEEL. APPLY PLATES TO EACH FACE OF TRUSS AND, UNLESS OTHERWISE LOCATED ON THIS DESIGN, POSITION PER DRAWINGS 160A-Z. ANY INSPECTION OF PLATES FOLLOWED BY (1) SHALL BE PER ANNEX A3 OF TPI1-2002 SEC.3. A SEAL ON THIS DRAWING INDICATES ACCEPTANCE OF PROFESSIONAL ENGINEERING RESPONSIBILITY SOLELY FOR THE TRUSS COMPONENT DESIGN SHOWN. THE SUITABILITY AND USE OF THIS COMPONENT FOR ANY BUILDING IS THE RESPONSIBILITY OF THE BUILDING DESIGNER PER ANSI/TPI 1 SEC. 2.

ARTHUR R. FISHER
LICENSE
No. 59687
AUG 0 [illegible] 05
STATE OF FLORIDA
PROFESSIONAL ENGINEER

TC LL	20.0 PSF	REF	R487-- 93397
TC DL	10.0 PSF	DATE	08/04/05
BC DL	10.0 PSF	DRW	HCUSR487 05216063
BC LL	0.0 PSF	HC-ENG	JB/AF
TOT.LD.	40.0 PSF	SEQN-	150663
DUR.FAC.	1.25		
SPACING	24.0"	JREF-	1SPC487_Z01

(5-318A-PAUL BROWN/ROOF - CJ1R)

Top chord 2x4 SP #2 Dense
Bot chord 2x6 SP #2

Deflection meets L/360 live and L/240 total load.

Provide (2) 16d common nails(0.162"x3.5"), toe nailed at Top chord.
Provide (2) 16d common nails(0.162"x3.5"), toe nailed at Bot chord.

110 mph wind, 17.75 ft mean hgt, ASCE 7-98, CLOSED bldg, Located anywhere in roof, CAT II, EXP B, wind TC DL=2.8 psf, wind BC DL=2.2 psf.

Shim all supports to solid bearing.

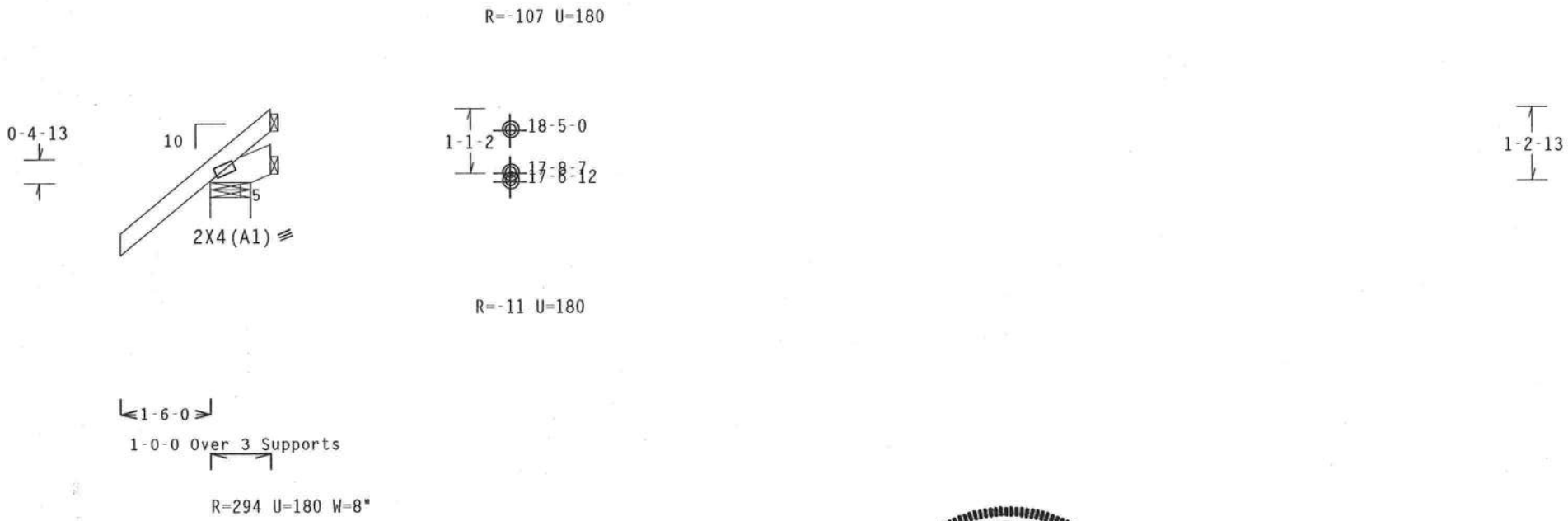

PLT TYP. Wave TPI Design Crit: TPI-1995(STD)/FBC 7.04.0805.16 FL/-/3/-/-/R/- Scale =.375"/Ft.

ALPINE
Alpine Engineered Products, Inc
1950 Marley Drive
Haines City, FL 33844
FL Certificate of Authorization # 567

WARNING TRUSSES REQUIRE EXTREME CARE IN FABRICATION, HANDLING, SHIPPING, INSTALLING AND BRACING. REFER TO BCSI 1-03 (BUILDING COMPONENT SAFETY INFORMATION), PUBLISHED BY TPI (TRUSS PLATE INSTITUTE, 583 D'ONOFRIO DR., SUITE 200, MADISON, WI 53719) AND WTCA (WOOD TRUSS COUNCIL OF AMERICA, 6300 ENTERPRISE LN, MADISON, WI 53719) FOR SAFETY PRACTICES PRIOR TO PERFORMING THESE FUNCTIONS. UNLESS OTHERWISE INDICATED, TOP CHORD SHALL HAVE PROPERLY ATTACHED STRUCTURAL PANELS AND BOTTOM CHORD SHALL HAVE A PROPERLY ATTACHED RIGID CEILING.

IMPORTANT FURNISH A COPY OF THIS DESIGN TO THE INSTALLATION CONTRACTOR. ALPINE ENGINEERED PRODUCTS, INC. SHALL NOT BE RESPONSIBLE FOR ANY DEVIATION FROM THIS DESIGN; ANY FAILURE TO BUILD THE TRUSS IN CONFORMANCE WITH TPI; OR FABRICATING, HANDLING, SHIPPING, INSTALLING & BRACING OF TRUSSES. DESIGN CONFORMS WITH APPLICABLE PROVISIONS OF NDS (NATIONAL DESIGN SPEC, BY AF&PA) AND TPI. ALPINE CONNECTOR PLATES ARE MADE OF 20/18/16GA (W,H/S/K) ASTM A653 GRADE 40/60 (W, K/H,S) GALV. STEEL. APPLY PLATES TO EACH FACE OF TRUSS AND, UNLESS OTHERWISE LOCATED ON THIS DESIGN, POSITION PER DRAWINGS 160A-Z. ANY INSPECTION OF PLATES FOLLOWED BY (1) SHALL BE PER ANNEX A3 OF TPI1-2002 SEC.3. A SEAL ON THIS DRAWING INDICATES ACCEPTANCE OF PROFESSIONAL ENGINEERING RESPONSIBILITY SOLELY FOR THE TRUSS COMPONENT DESIGN SHOWN. THE SUITABILITY AND USE OF THIS COMPONENT FOR ANY BUILDING IS THE RESPONSIBILITY OF THE BUILDING DESIGNER PER ANSI/TPI 1 SEC. 2.

ARTHUR R. FISHER LICENSE No. 59687 Aug 04 '05 STATE OF FLORIDA PROFESSIONAL ENGINEER

TC LL	20.0 PSF	REF R487-- 93398
TC DL	10.0 PSF	DATE 08/04/05
BC DL	10.0 PSF	DRW HCUSR487 05216064
BC LL	0.0 PSF	HC-ENG JB/AF
TOT.LD.	40.0 PSF	SEQN- 150667
DUR.FAC.	1.25	
SPACING	24.0"	JREF- 1SPC487_Z01

(5-318A-PAUL BROWN/ROOF - HJ2)

Top chord 2x4 SP #2 Dense
Bot chord 2x6 SP #2

Hipjack supports 2-0-0 setback jacks with no webs.

Shim all supports to solid bearing.

110 mph wind, 18.13 ft mean hgt, ASCE 7-98, CLOSED bldg, Located anywhere in roof, CAT II, EXP B, wind TC DL=2.8 psf, wind BC DL=2.2 psf.

Deflection meets L/360 live and L/240 total load.

Provide (2) 16d common nails(0.162"x3.5"), toe nailed at Top chord.
Provide (2) 16d common nails(0.162"x3.5"), toe nailed at Bot chord.

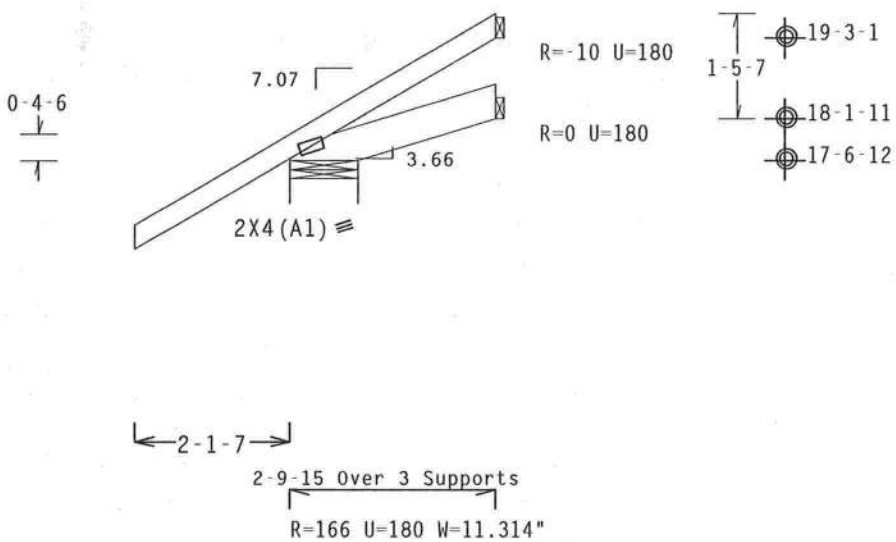

PLT TYP. Wave TPI | Design Crit: TPI-1995(STD)/FBC | 7.0 | 4805.16 | QTY 1 | FL/-/3/-/-/R/- | Scale =.375"/Ft.

ALPINE

Alpine Engineered Products, Inc.
1950 Marley Drive
Haines City, FL 33844
FL Certificate of Authorization # 567

WARNING TRUSSES REQUIRE EXTREME CARE IN FABRICATION, HANDLING, SHIPPING, INSTALLING AND BRACING. REFER TO BCSI 1-03 (BUILDING COMPONENT SAFETY INFORMATION), PUBLISHED BY TPI (TRUSS PLATE INSTITUTE, 583 D'ONOFRIO DR., SUITE 200, MADISON, WI 53719) AND WTCA (WOOD TRUSS COUNCIL OF AMERICA, 6300 ENTERPRISE LN, MADISON, WI 53719) FOR SAFETY PRACTICES PRIOR TO PERFORMING THESE FUNCTIONS. UNLESS OTHERWISE INDICATED, TOP CHORD SHALL HAVE PROPERLY ATTACHED STRUCTURAL PANELS AND BOTTOM CHORD SHALL HAVE A PROPERLY ATTACHED RIGID CEILING.

IMPORTANT FURNISH A COPY OF THIS DESIGN TO THE INSTALLATION CONTRACTOR. ALPINE ENGINEERED PRODUCTS, INC. SHALL NOT BE RESPONSIBLE FOR ANY DEVIATION FROM THIS DESIGN; ANY FAILURE TO BUILD THE TRUSS IN CONFORMANCE WITH TPI; OR FABRICATING, HANDLING, SHIPPING, INSTALLING & BRACING OF TRUSSES. DESIGN CONFORMS WITH APPLICABLE PROVISIONS OF NDS (NATIONAL DESIGN SPEC, BY AF&PA) AND TPI. ALPINE CONNECTOR PLATES ARE MADE OF 20/18/16GA (W,H/S/K) ASTM A653 GRADE 40/60 (W, K/H,S) GALV. STEEL. APPLY PLATES TO EACH FACE OF TRUSS AND, UNLESS OTHERWISE LOCATED ON THIS DESIGN, POSITION PER DRAWINGS 160A-Z. ANY INSPECTION OF PLATES FOLLOWED BY (1) SHALL BE PER ANNEX A3 OF TPI1-2002 SEC.3. A SEAL ON THIS DRAWING INDICATES ACCEPTANCE OF PROFESSIONAL ENGINEERING RESPONSIBILITY SOLELY FOR THE TRUSS COMPONENT DESIGN SHOWN. THE SUITABILITY AND USE OF THIS COMPONENT FOR ANY BUILDING IS THE RESPONSIBILITY OF THE BUILDING DESIGNER PER ANSI/TPI 1 SEC. 2.

ARTHUR R. FISHER LICENSE No. 59687 STATE OF FLORIDA PROFESSIONAL ENGINEER
JUL 04 '05

TC LL	20.0 PSF	REF R487-- 93399
TC DL	10.0 PSF	DATE 08/04/05
BC DL	10.0 PSF	DRW HCUSR487 05216065
BC LL	0.0 PSF	HC-ENG JB/AF
TOT.LD.	40.0 PSF	SEQN- 150678
DUR.FAC.	1.25	
SPACING	24.0"	JREF- 1SPC487_Z01

(5-318A-PAUL BROWN/ROOF - CJ1L)

Top chord 2x4 SP #2 Dense
Bot chord 2x6 SP #2 :B2 2x4 SP #2 Dense:

110 mph wind, 17.75 ft mean hgt, ASCE 7-98, CLOSED bldg, Located anywhere in roof, CAT II, EXP B, wind TC DL=2.8 psf, wind BC DL=2.2 psf.

(**) Plate relocated as shown.

Deflection meets L/360 live and L/240 total load.

Provide (2) 16d common nails(0.162"x3.5"), toe nailed at Top chord.
Provide (2) 16d common nails(0.162"x3.5"), toe nailed at Bot chord.

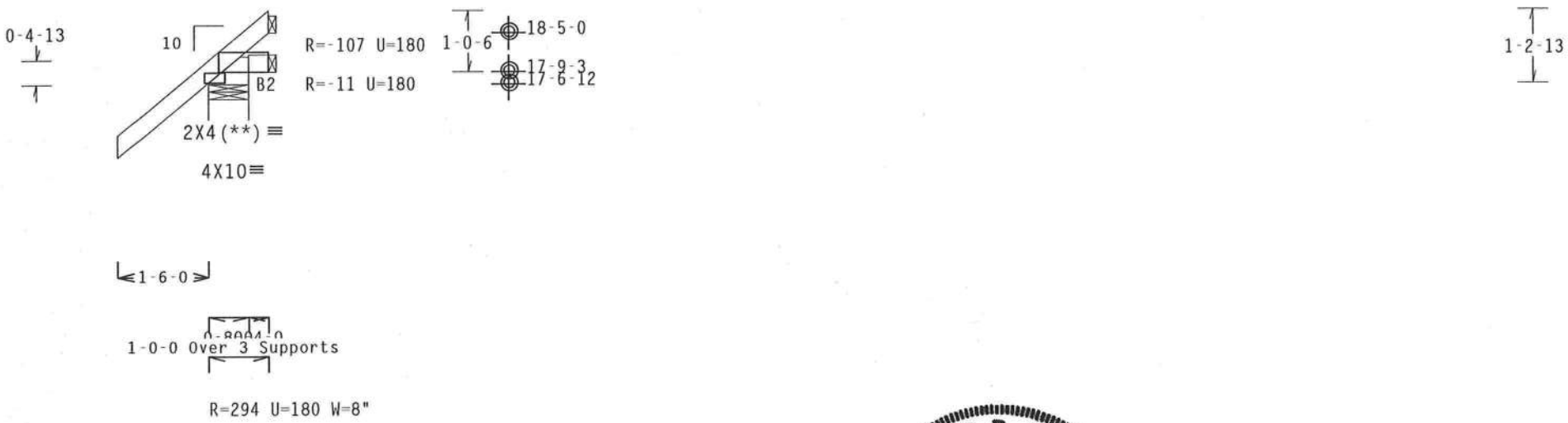

PLT TYP. Wave TPI Design Crit: TPI-1995(STD)/FBC 7.0 [illegible] 1 FL/-/3/-/-/R/- Scale =.375"/Ft.

ALPINE

Alpine Engineered Products, Inc
1950 Marley Drive
Haines City, FL 33844
FL Certificate of Authorization # 567

WARNING TRUSSES REQUIRE EXTREME CARE IN FABRICATION, HANDLING, SHIPPING, INSTALLING AND BRACING. REFER TO BCSI 1-03 (BUILDING COMPONENT SAFETY INFORMATION), PUBLISHED BY TPI (TRUSS PLATE INSTITUTE, 583 D'ONOFRIO DR., SUITE 200, MADISON, WI 53719) AND WTCA (WOOD TRUSS COUNCIL OF AMERICA, 6300 ENTERPRISE LN, MADISON, WI 53719) FOR SAFETY PRACTICES PRIOR TO PERFORMING THESE FUNCTIONS. UNLESS OTHERWISE INDICATED TOP CHORD SHALL HAVE PROPERLY ATTACHED STRUCTURAL PANELS AND BOTTOM CHORD SHALL HAVE A PROPERLY ATTACHED RIGID CEILING.

IMPORTANTFURNISH A COPY OF THIS DESIGN TO THE INSTALLATION CONTRACTOR. ALPINE ENGINEERED PRODUCTS, INC. SHALL NOT BE RESPONSIBLE FOR ANY DEVIATION FROM THIS DESIGN; ANY FAILURE TO BUILD THE TRUSS IN CONFORMANCE WITH TPI; OR FABRICATING, HANDLING, SHIPPING, INSTALLING & BRACING OF TRUSSES. DESIGN CONFORMS WITH APPLICABLE PROVISIONS OF NDS (NATIONAL DESIGN SPEC, BY AF&PA) AND TPI. ALPINE CONNECTOR PLATES ARE MADE OF 20/18/16GA (W,H/S/K) ASTM A653 GRADE 40/60 (W, K/H,S) GALV. STEEL. APPLY PLATES TO EACH FACE OF TRUSS AND, UNLESS OTHERWISE LOCATED ON THIS DESIGN, POSITION PER DRAWINGS 160A-Z. ANY INSPECTION OF PLATES FOLLOWED BY (1) SHALL BE PER ANNEX A3 OF TPI1-2002 SEC.3. A SEAL ON THIS DRAWING INDICATES ACCEPTANCE OF PROFESSIONAL ENGINEERING RESPONSIBILITY SOLELY FOR THE TRUSS COMPONENT DESIGN SHOWN. THE SUITABILITY AND USE OF THIS COMPONENT FOR ANY BUILDING IS THE RESPONSIBILITY OF THE BUILDING DESIGNER PER ANSI/TPI 1 SEC. 2.

ARTHUR R. FISHER LICENSE No.59687 STATE OF FLORIDA PROFESSIONAL ENGINEER
Aug 04 '05

TC LL	20.0 PSF	REF	R487-- 93400
TC DL	10.0 PSF	DATE	08/04/05
BC DL	10.0 PSF	DRW	HCUSR487 05216066
BC LL	0.0 PSF	HC-ENG	JB/AF
TOT.LD.	40.0 PSF	SEQN-	150674
DUR.FAC.	1.25		
SPACING	24.0"	JREF-	1SPC487_Z01

(5-318A-PAUL BROWN/ROOF - EJ7G)

Top chord 2x4 SP #2 Dense
Bot chord 2x6 SP #2
Webs 2x4 SP #3

110 mph wind, 20.88 ft mean hgt, ASCE 7-98, CLOSED bldg, not located within 4.50 ft from roof edge, CAT II, EXP B, wind TC DL=2.8 psf, wind BC DL=2.2 psf.

H = recommended connection based on manufacturer tested capacities and calculations. Conditions may exist that require different connections than indicated. Refer to manufacturer publication for additional information.

SPECIAL LOADS
------(LUMBER DUR.FAC.=1.25 / PLATE DUR.FAC.=1.25)
TC - From 60 PLF at 0.00 to 60 PLF at 7.00
BC - From 20 PLF at 0.00 to 20 PLF at 7.00
BC - 564 LB Conc. Load at 2.40, 4.40, 6.40

Right end vertical not exposed to wind pressure.

Deflection meets L/360 live and L/240 total load.

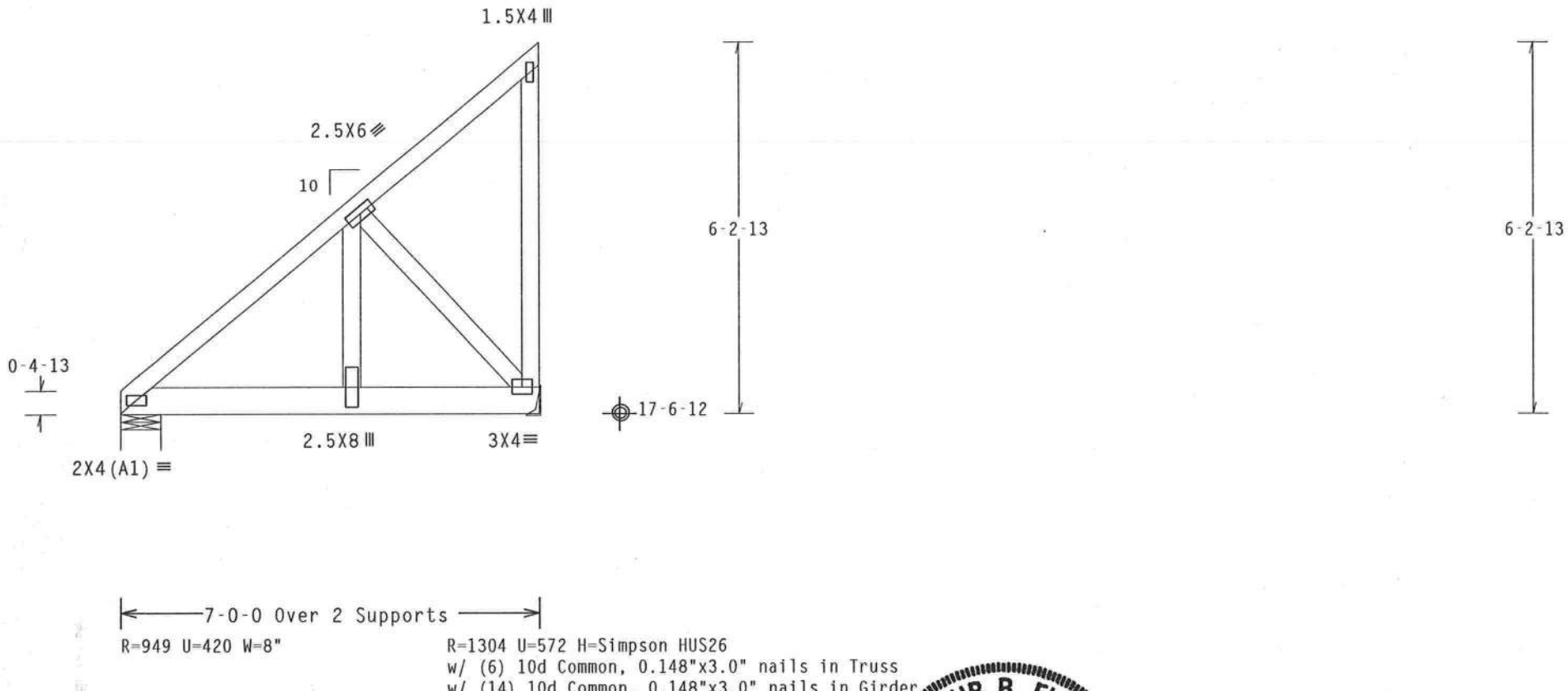

R=949 U=420 W=8"

R=1304 U=572 H=Simpson HUS26
w/ (6) 10d Common, 0.148"x3.0" nails in Truss
w/ (14) 10d Common, 0.148"x3.0" nails in Girder
Girder is (1)2X6 min. So.Pine

PLT TYP. Wave TPI Design Crit: TPI-1995(STD)/FBC 7.04 8/05 16 6/7/1 FL/-/3/-/-/R/- Scale =.375"/Ft.

ALPINE
Alpine Engineered Products, Inc
1950 Marley Drive
Haines City, FL 33844
FL Certificate of Authorization # 567

WARNING TRUSSES REQUIRE EXTREME CARE IN FABRICATION, HANDLING, SHIPPING, INSTALLING AND BRACING. REFER TO BCSI 1-03 (BUILDING COMPONENT SAFETY INFORMATION), PUBLISHED BY TPI (TRUSS PLATE INSTITUTE, 583 D'ONOFRIO DR., SUITE 200, MADISON, WI 53719) AND WTCA (WOOD TRUSS COUNCIL OF AMERICA, 6300 ENTERPRISE LN, MADISON, WI 53719) FOR SAFETY PRACTICES PRIOR TO PERFORMING THESE FUNCTIONS. UNLESS OTHERWISE INDICATED, TOP CHORD SHALL HAVE PROPERLY ATTACHED STRUCTURAL PANELS AND BOTTOM CHORD SHALL HAVE A PROPERLY ATTACHED RIGID CEILING.

IMPORTANT FURNISH A COPY OF THIS DESIGN TO THE INSTALLATION CONTRACTOR. ALPINE ENGINEERED PRODUCTS, INC. SHALL NOT BE RESPONSIBLE FOR ANY DEVIATION FROM THIS DESIGN; ANY FAILURE TO BUILD THE TRUSS IN CONFORMANCE WITH TPI; OR FABRICATING, HANDLING, SHIPPING, INSTALLING & BRACING OF TRUSSES. DESIGN CONFORMS WITH APPLICABLE PROVISIONS OF NDS (NATIONAL DESIGN SPEC. BY AF&PA) AND TPI. ALPINE CONNECTOR PLATES ARE MADE OF 20/18/16GA (W,H/S/K) ASTM A653 GRADE 40/60 (W, K/H,S) GALV. STEEL. APPLY PLATES TO EACH FACE OF TRUSS AND, UNLESS OTHERWISE LOCATED ON THIS DESIGN, POSITION PER DRAWINGS 160A-Z. ANY INSPECTION OF PLATES FOLLOWED BY (1) SHALL BE PER ANNEX A3 OF TPI1-2002 SEC.3. A SEAL ON THIS DRAWING INDICATES ACCEPTANCE OF PROFESSIONAL ENGINEERING RESPONSIBILITY SOLELY FOR THE TRUSS COMPONENT DESIGN SHOWN. THE SUITABILITY AND USE OF THIS COMPONENT FOR ANY BUILDING IS THE RESPONSIBILITY OF THE BUILDING DESIGNER PER ANSI/TPI 1 SEC. 2.

ARTHUR R. FISHER
LICENSE
No. 59687
AUG 08 05
STATE OF FLORIDA
PROFESSIONAL ENGINEER

TC LL	20.0 PSF	REF R487-- 93401
TC DL	10.0 PSF	DATE 08/04/05
BC DL	10.0 PSF	DRW HCUSR487 05216067
BC LL	0.0 PSF	HC-ENG JB/AF
TOT.LD.	40.0 PSF	SEQN- 150712
DUR.FAC.	1.25	
SPACING	24.0"	JREF- 1SPC487_Z01

(5-318A-PAUL BROWN/ROOF - H13AP)

Top chord 2x4 SP #2 Dense
Bot chord 2x4 SP #2 Dense
Webs 2x4 SP #3

Deflection meets L/360 live and L/240 total load.

REFER TO DWG PIGBACKB0204 FOR PIGGYBACK DETAILS.
TOP CHORD OF SUPPORTING TRUSS UNDER PIGGYBACK TO BE BRACED @ 24"O.C., UNLESS OTHERWISE SPECIFIED

110 mph wind, 27.96 ft mean hgt, ASCE 7-98, CLOSED bldg, not located within 4.50 ft from roof edge, CAT II, EXP B, wind TC DL=2.8 psf, wind BC DL=2.2 psf.

PLT TYP. Wave TPI Design Crit: TPI-1995(STD)/FBC 7.04.08.05.10 FL/-/3/-/-/R/- Scale =.375"/Ft.

ALPINE

Alpine Engineered Products, Inc
1950 Marley Drive
Haines City, FL 33844
FL Certificate of Authorization # 567

WARNING TRUSSES REQUIRE EXTREME CARE IN FABRICATION, HANDLING, SHIPPING, INSTALLING AND BRACING. REFER TO BCSI 1-03 (BUILDING COMPONENT SAFETY INFORMATION), PUBLISHED BY TPI (TRUSS PLATE INSTITUTE, 583 D'ONOFRIO DR., SUITE 200, MADISON, WI 53719) AND WTCA (WOOD TRUSS COUNCIL OF AMERICA, 6300 ENTERPRISE LN, MADISON, WI 53719) FOR SAFETY PRACTICES PRIOR TO PERFORMING THESE FUNCTIONS. UNLESS OTHERWISE INDICATED, TOP CHORD SHALL HAVE PROPERLY ATTACHED STRUCTURAL PANELS AND BOTTOM CHORD SHALL HAVE A PROPERLY ATTACHED RIGID CEILING.

IMPORTANT FURNISH A COPY OF THIS DESIGN TO THE INSTALLATION CONTRACTOR. ALPINE ENGINEERED PRODUCTS, INC. SHALL NOT BE RESPONSIBLE FOR ANY DEVIATION FROM THIS DESIGN; ANY FAILURE TO BUILD THE TRUSS IN CONFORMANCE WITH TPI; OR FABRICATING, HANDLING, SHIPPING, INSTALLING & BRACING OF TRUSSES. DESIGN CONFORMS WITH APPLICABLE PROVISIONS OF NDS (NATIONAL DESIGN SPEC, BY AF&PA) AND TPI. ALPINE CONNECTOR PLATES ARE MADE OF 20/18/16GA (W,H/S/K) ASTM A653 GRADE 40/60 (W, K/H,S) GALV. STEEL. APPLY PLATES TO EACH FACE OF TRUSS AND, UNLESS OTHERWISE LOCATED ON THIS DESIGN, POSITION PER DRAWINGS 160A-Z. ANY INSPECTION OF PLATES FOLLOWED BY (I) SHALL BE PER ANNEX A3 OF TPI1-2002 SEC.3. A SEAL ON THIS DRAWING INDICATES ACCEPTANCE OF PROFESSIONAL ENGINEERING RESPONSIBILITY SOLELY FOR THE TRUSS COMPONENT DESIGN SHOWN. THE SUITABILITY AND USE OF THIS COMPONENT FOR ANY BUILDING IS THE RESPONSIBILITY OF THE BUILDING DESIGNER PER ANSI/TPI 1 SEC. 2.

ARTHUR R. FISHER
LICENSE
No. 59687
Aug 04 '05
STATE OF FLORIDA
PROFESSIONAL ENGINEER

TC LL	20.0 PSF	REF	R487-- 93402
TC DL	10.0 PSF	DATE	08/04/05
BC DL	10.0 PSF	DRW	HCUSR487 05216068
BC LL	0.0 PSF	HC-ENG	JB/AF
TOT.LD.	40.0 PSF	SEQN-	150748
DUR.FAC.	1.25		
SPACING	24.0"	JREF-	1SPC487_Z01

(5-318A-PAUL BROWN/ROOF - AP)

Top chord 2x4 SP #2 Dense
Bot chord 2x4 SP #2 Dense
Webs 2x4 SP #3

Deflection meets L/360 live and L/240 total load.

REFER TO DWG PIGBACKB0204 FOR PIGGYBACK DETAILS.
TOP CHORD OF SUPPORTING TRUSS UNDER PIGGYBACK TO BE BRACED @ 24"O.C., UNLESS OTHERWISE SPECIFIED

110 mph wind, 28.38 ft mean hgt, ASCE 7-98, CLOSED bldg, not located within 4.50 ft from roof edge, CAT II, EXP B, wind TC DL=2.8 psf, wind BC DL=2.2 psf.

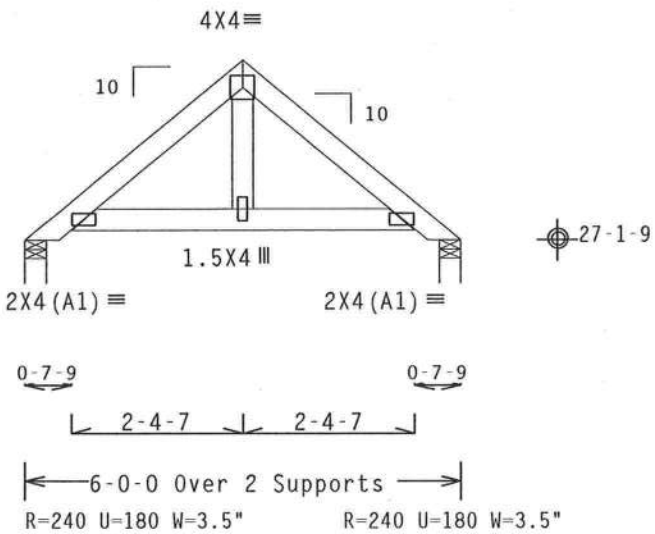

PLT TYP. Wave TPI | Design Crit: TPI-1995(STD)/FBC | 7.0 [illegible] 05 16 [illegible] :4 | FL/-/3/-/-/R/- | Scale =.375"/Ft.

ALPINE
Alpine Engineered Products, Inc.
1950 Marley Drive
Haines City, FL 33844
FL Certificate of Authorization # 567

WARNING TRUSSES REQUIRE EXTREME CARE IN FABRICATION, HANDLING, SHIPPING, INSTALLING AND BRACING. REFER TO BCSI 1-03 (BUILDING COMPONENT SAFETY INFORMATION), PUBLISHED BY TPI (TRUSS PLATE INSTITUTE, 583 D'ONOFRIO DR., SUITE 200, MADISON, WI 53719) AND WTCA (WOOD TRUSS COUNCIL OF AMERICA, 6300 ENTERPRISE LN MADISON, WI 53719) FOR SAFETY PRACTICES PRIOR TO PERFORMING THESE FUNCTIONS. UNLESS OTHERWISE INDICATED TOP CHORD SHALL HAVE PROPERLY ATTACHED STRUCTURAL PANELS AND BOTTOM CHORD SHALL HAVE A PROPERLY ATTACHED RIGID CEILING.

IMPORTANT FURNISH A COPY OF THIS DESIGN TO THE INSTALLATION CONTRACTOR. ALPINE ENGINEERED PRODUCTS, INC. SHALL NOT BE RESPONSIBLE FOR ANY DEVIATION FROM THIS DESIGN; ANY FAILURE TO BUILD THE TRUSS IN CONFORMANCE WITH TPI; OR FABRICATING, HANDLING, SHIPPING, INSTALLING & BRACING OF TRUSSES. DESIGN CONFORMS WITH APPLICABLE PROVISIONS OF NDS (NATIONAL DESIGN SPEC. BY AF&PA) AND TPI. ALPINE CONNECTOR PLATES ARE MADE OF 20/18/16GA (W,H/S/K) ASTM A653 GRADE 40/60 (W, K/H,S) GALV. STEEL. APPLY PLATES TO EACH FACE OF TRUSS AND, UNLESS OTHERWISE LOCATED ON THIS DESIGN, POSITION PER DRAWINGS 160A-Z. ANY INSPECTION OF PLATES FOLLOWED BY (1) SHALL BE PER ANNEX A3 OF TPI1-2002 SEC.3. A SEAL ON THIS DRAWING INDICATES ACCEPTANCE OF PROFESSIONAL ENGINEERING RESPONSIBILITY SOLELY FOR THE TRUSS COMPONENT DESIGN SHOWN. THE SUITABILITY AND USE OF THIS COMPONENT FOR ANY BUILDING IS THE RESPONSIBILITY OF THE BUILDING DESIGNER PER ANSI/TPI 1 SEC. 2.

ARTHUR R. FISHER LICENSE No. 59687 Aug 04 05 STATE OF FLORIDA PROFESSIONAL ENGINEER

TC LL	20.0 PSF	REF	R487-- 93403
TC DL	10.0 PSF	DATE	08/04/05
BC DL	10.0 PSF	DRW	HCUSR487 05216069
BC LL	0.0 PSF	HC-ENG	JB/AF
TOT.LD.	40.0 PSF	SEQN-	150758
DUR.FAC.	1.25		
SPACING	24.0"	JREF-	1SPC487_Z01

(5-318A-PAUL BROWN/ROOF - H13BP)

Top chord 2x4 SP #2 Dense
Bot chord 2x4 SP #2 Dense
Webs 2x4 SP #3

Deflection meets L/360 live and L/240 total load.

REFER TO DWG PIGBACKB0204 FOR PIGGYBACK DETAILS.
TOP CHORD OF SUPPORTING TRUSS UNDER PIGGYBACK TO
BE BRACED @ 24"O.C., UNLESS OTHERWISE SPECIFIED

110 mph wind, 27.96 ft mean hgt, ASCE 7-98, CLOSED bldg, Located anywhere in roof, CAT II, EXP B, wind TC DL=2.8 psf, wind BC DL=2.2 psf.

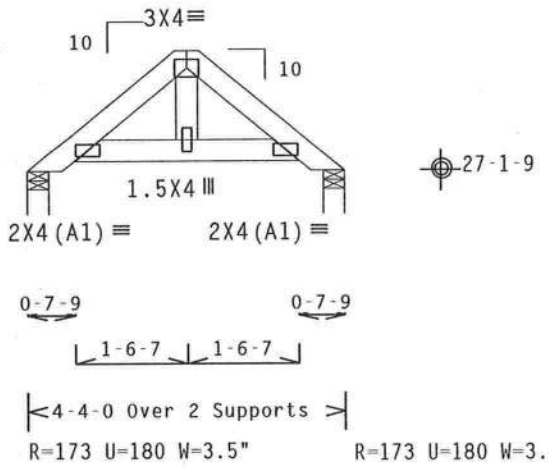

1-6-4

PLT TYP. Wave TPI | Design Crit: TPI-1995(STD)/FBC | 7.0 | FL/-/3/-/-/R/- | Scale =.375"/Ft.

ALPINE
Alpine Engineered Products, Inc.
1950 Marley Drive
Haines City, FL 33844
FL Certificate of Authorization # 567

WARNING TRUSSES REQUIRE EXTREME CARE IN FABRICATION, HANDLING, SHIPPING, INSTALLING AND BRACING. REFER TO BCSI 1-03 (BUILDING COMPONENT SAFETY INFORMATION), PUBLISHED BY TPI (TRUSS PLATE INSTITUTE, 583 D'ONOFRIO DR., SUITE 200, MADISON, WI 53719) AND WTCA (WOOD TRUSS COUNCIL OF AMERICA, 6300 ENTERPRISE LN, MADISON, WI 53719) FOR SAFETY PRACTICES PRIOR TO PERFORMING THESE FUNCTIONS. UNLESS OTHERWISE INDICATED, TOP CHORD SHALL HAVE PROPERLY ATTACHED STRUCTURAL PANELS AND BOTTOM CHORD SHALL HAVE A PROPERLY ATTACHED RIGID CEILING.

IMPORTANT FURNISH A COPY OF THIS DESIGN TO THE INSTALLATION CONTRACTOR. ALPINE ENGINEERED PRODUCTS, INC. SHALL NOT BE RESPONSIBLE FOR ANY DEVIATION FROM THIS DESIGN; ANY FAILURE TO BUILD THE TRUSS IN CONFORMANCE WITH TPI; OR FABRICATING, HANDLING, SHIPPING, INSTALLING & BRACING OF TRUSSES. DESIGN CONFORMS WITH APPLICABLE PROVISIONS OF NDS (NATIONAL DESIGN SPEC. BY AF&PA) AND TPI. ALPINE CONNECTOR PLATES ARE MADE OF 20/18/16GA (W,H/S/K) ASTM A653 GRADE 40/60 (W, K/H,S) GALV. STEEL. APPLY PLATES TO EACH FACE OF TRUSS AND, UNLESS OTHERWISE LOCATED ON THIS DESIGN, POSITION PER DRAWINGS 160A-2. ANY INSPECTION OF PLATES FOLLOWED BY (1) SHALL BE PER ANNEX A3 OF TPI1-2002 SEC.3. A SEAL ON THIS DRAWING INDICATES ACCEPTANCE OF PROFESSIONAL ENGINEERING RESPONSIBILITY SOLELY FOR THE TRUSS COMPONENT DESIGN SHOWN. THE SUITABILITY AND USE OF THIS COMPONENT FOR ANY BUILDING IS THE RESPONSIBILITY OF THE BUILDING DESIGNER PER ANSI/TPI 1 SEC. 2.

ARTHUR R. FISHER LICENSE No.59687 STATE OF FLORIDA PROFESSIONAL ENGINEER
Aug 04 '05

TC LL	20.0 PSF	REF R487-- 93404
TC DL	10.0 PSF	DATE 08/04/05
BC DL	10.0 PSF	DRW HCUSR487 05216070
BC LL	0.0 PSF	HC-ENG JB/AF
TOT.LD.	40.0 PSF	SEQN- 150810
DUR.FAC.	1.25	
SPACING	24.0"	JREF- 1SPC487_Z01

(5-318A-PAUL BROWN/ROOF - BP)

Top chord 2x4 SP #2 Dense
Bot chord 2x4 SP #2 Dense
Webs 2x4 SP #3

Deflection meets L/360 live and L/240 total load.

REFER TO DWG PIGBACKB0204 FOR PIGGYBACK DETAILS.
TOP CHORD OF SUPPORTING TRUSS UNDER PIGGYBACK TO
BE BRACED @ 24"O.C., UNLESS OTHERWISE SPECIFIED

110 mph wind, 28.03 ft mean hgt, ASCE 7-98, CLOSED bldg, Located anywhere in roof, CAT II, EXP B, wind TC DL=2.8 psf, wind BC DL=2.2 psf.

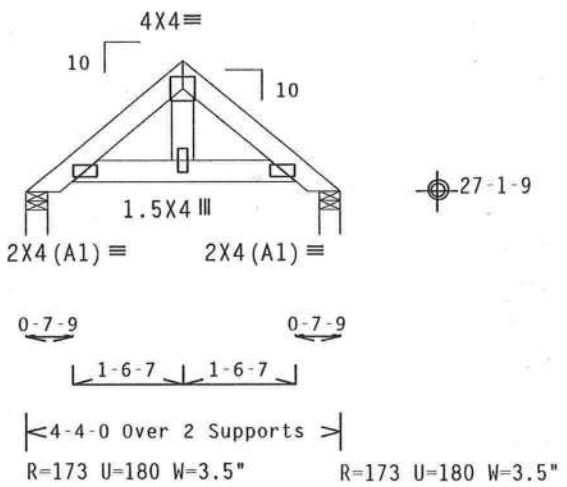

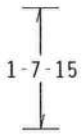

PLT TYP. Wave TPI | Design Crit: TPI-1995(STD)/FBC | 7.0.0.0305.16 | QTY 7 | FL/-/3/-/-/R/- | Scale =.375"/Ft.

ALPINE

Alpine Engineered Products, Inc
1950 Marley Drive
Haines City, FL 33844
FL Certificate of Authorization # 567

WARNING TRUSSES REQUIRE EXTREME CARE IN FABRICATION, HANDLING, SHIPPING, INSTALLING AND BRACING. REFER TO BCSI 1-03 (BUILDING COMPONENT SAFETY INFORMATION), PUBLISHED BY TPI (TRUSS PLATE INSTITUTE, 583 D'ONOFRIO DR., SUITE 200, MADISON, WI 53719) AND WTCA (WOOD TRUSS COUNCIL OF AMERICA, 6300 ENTERPRISE LN, MADISON, WI 53719) FOR SAFETY PRACTICES PRIOR TO PERFORMING THESE FUNCTIONS. UNLESS OTHERWISE INDICATED, TOP CHORD SHALL HAVE PROPERLY ATTACHED STRUCTURAL PANELS AND BOTTOM CHORD SHALL HAVE A PROPERLY ATTACHED RIGID CEILING.

IMPORTANT FURNISH A COPY OF THIS DESIGN TO THE INSTALLATION CONTRACTOR. ALPINE ENGINEERED PRODUCTS, INC. SHALL NOT BE RESPONSIBLE FOR ANY DEVIATION FROM THIS DESIGN; ANY FAILURE TO BUILD THE TRUSS IN CONFORMANCE WITH TPI; OR FABRICATING, HANDLING, SHIPPING, INSTALLING & BRACING OF TRUSSES. DESIGN CONFORMS WITH APPLICABLE PROVISIONS OF NDS (NATIONAL DESIGN SPEC. BY AF&PA) AND TPI. ALPINE CONNECTOR PLATES ARE MADE OF 20/18/16GA (W,H/S/K) ASTM A653 GRADE 40/60 (W, K/H,S) GALV. STEEL. APPLY PLATES TO EACH FACE OF TRUSS AND, UNLESS OTHERWISE LOCATED ON THIS DESIGN, POSITION PER DRAWINGS 160A-2: ANY INSPECTION OF PLATES FOLLOWED BY (1) SHALL BE PER ANNEX A3 OF TPI1-2002 SEC.3. A SEAL ON THIS DRAWING INDICATES ACCEPTANCE OF PROFESSIONAL ENGINEERING RESPONSIBILITY SOLELY FOR THE TRUSS COMPONENT DESIGN SHOWN. THE SUITABILITY AND USE OF THIS COMPONENT FOR ANY BUILDING IS THE RESPONSIBILITY OF THE BUILDING DESIGNER PER ANSI/TPI 1 SEC. 2.

ARTHUR R. FISHER LICENSE No 59687 STATE OF FLORIDA PROFESSIONAL ENGINEER
Aug 01, 05

TC LL	20.0 PSF	REF R487-- 93405
TC DL	10.0 PSF	DATE 08/04/05
BC DL	10.0 PSF	DRW HCUSR487 05216071
BC LL	0.0 PSF	HC-ENG JB/AF
TOT.LD.	40.0 PSF	SEQN- 150816
DUR.FAC.	1.25	
SPACING	24.0"	JREF- 1SPC487_Z01

(5-318A-PAUL BROWN/ROOF - BHP)

Top chord 2x4 SP #2 Dense
Bot chord 2x4 SP #2 Dense
Webs 2x4 SP #3

Deflection meets L/360 live and L/240 total load.

(**) Plate relocated as shown.

110 mph wind, 28.03 ft mean hgt, ASCE 7-98, CLOSED bldg, not located within 4.50 ft from roof edge, CAT II, EXP B, wind TC DL=2.8 psf, wind BC DL=2.2 psf.

REFER TO DWG PIGBACKB0204 FOR PIGGYBACK DETAILS.
TOP CHORD OF SUPPORTING TRUSS UNDER PIGGYBACK TO BE BRACED @ 24"O.C., UNLESS OTHERWISE SPECIFIED

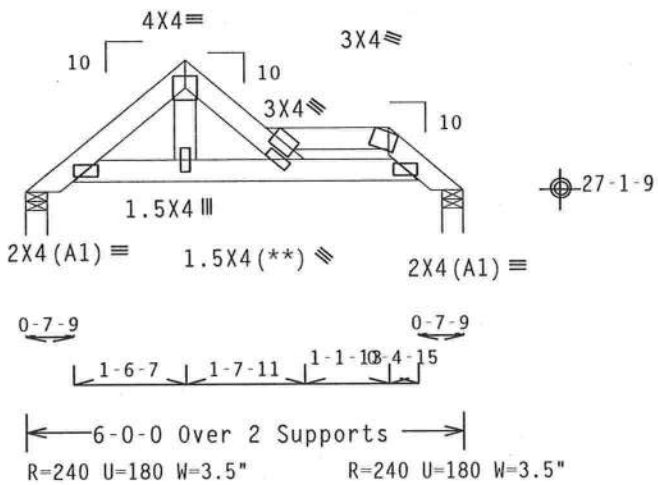

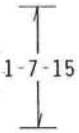

PLT TYP. Wave TPI | Design Crit: TPI-1995(STD)/FBC | 7.0 [illegible] | FL/-/3/-/-/R/- | Scale =.375"/Ft.

ALPINE

Alpine Engineered Products, Inc.
1950 Marley Drive
Haines City, FL 33844
FL Certificate of Authorization # 567

WARNING TRUSSES REQUIRE EXTREME CARE IN FABRICATION, HANDLING, SHIPPING, INSTALLING AND BRACING. REFER TO BCSI 1-03 (BUILDING COMPONENT SAFETY INFORMATION), PUBLISHED BY TPI (TRUSS PLATE INSTITUTE, 583 D'ONOFRIO DR., SUITE 200, MADISON, WI 53719) AND WTCA (WOOD TRUSS COUNCIL OF AMERICA, 6300 ENTERPRISE LN MADISON, WI 53719) FOR SAFETY PRACTICES PRIOR TO PERFORMING THESE FUNCTIONS. UNLESS OTHERWISE INDICATED TOP CHORD SHALL HAVE PROPERLY ATTACHED STRUCTURAL PANELS AND BOTTOM CHORD SHALL HAVE A PROPERLY ATTACHED RIGID CEILING.

IMPORTANT FURNISH A COPY OF THIS DESIGN TO THE INSTALLATION CONTRACTOR. ALPINE ENGINEERED PRODUCTS, INC. SHALL NOT BE RESPONSIBLE FOR ANY DEVIATION FROM THIS DESIGN; ANY FAILURE TO BUILD THE TRUSS IN CONFORMANCE WITH TPI; OR FABRICATING, HANDLING, SHIPPING, INSTALLING & BRACING OF TRUSSES. DESIGN CONFORMS WITH APPLICABLE PROVISIONS OF NDS (NATIONAL DESIGN SPEC. BY AF&PA) AND TPI. ALPINE CONNECTOR PLATES ARE MADE OF 20/18/16GA (W,H/S/K) ASTM A653 GRADE 40/60 (W, K/H,S) GALV. STEEL. APPLY PLATES TO EACH FACE OF TRUSS AND, UNLESS OTHERWISE LOCATED ON THIS DESIGN, POSITION PER DRAWINGS 160A-Z. ANY INSPECTION OF PLATES FOLLOWED BY (1) SHALL BE PER ANNEX A3 OF TPI1-2002 SEC.3. A SEAL ON THIS DRAWING INDICATES ACCEPTANCE OF PROFESSIONAL ENGINEERING RESPONSIBILITY SOLELY FOR THE TRUSS COMPONENT DESIGN SHOWN. THE SUITABILITY AND USE OF THIS COMPONENT FOR ANY BUILDING IS THE RESPONSIBILITY OF THE BUILDING DESIGNER PER ANSI/TPI 1 SEC. 2.

ARTHUR R. FISHER
LICENSE
No. 59687
Aug 04, 05
STATE OF FLORIDA
PROFESSIONAL ENGINEER

TC LL	20.0 PSF	REF	R487-- 93406
TC DL	10.0 PSF	DATE	08/04/05
BC DL	10.0 PSF	DRW	HCUSR487 05216072
BC LL	0.0 PSF	HC-ENG	JB/AF
TOT.LD.	40.0 PSF	SEQN-	150823
DUR.FAC.	1.25		
SPACING	24.0"	JREF-	1SPC487_Z01

CLB WEB BRACE SUBSTITUTION

THIS DETAIL IS TO BE USED WHEN CONTINUOUS LATERAL BRACING (CLB) IS SPECIFIED ON AN ALPINE TRUSS DESIGN BUT AN ALTERNATIVE WEB BRACING METHOD IS DESIRED.

NOTES:

THIS DETAIL IS ONLY APPLICABLE FOR CHANGING THE SPECIFIED CLB SHOWN ON SINGLE PLY SEALED DESIGNS TO T-BRACING OR SCAB BRACING.

ALTERNATIVE BRACING SPECIFIED IN CHART BELOW MAY BE CONSERVATIVE. FOR MINIMUM ALTERNATIVE BRACING, RE-RUN DESIGN WITH APPROPRIATE BRACING.

WEB MEMBER SIZE	SPECIFIED CLB BRACING	ALTERNATIVE BRACING T OR L-BRACE	ALTERNATIVE BRACING SCAB BRACE
2X3 OR 2X4	1 ROW	2X4	1-2X4
2X3 OR 2X4	2 ROWS	2X6	2-2X4
2X6	1 ROW	2X4	1-2X6
2X6	2 ROWS	2X6	2-2X4(*)
2X8	1 ROW	2X6	1-2X8
2X8	2 ROWS	2X6	2-2X6(*)

T-BRACE, L-BRACE AND SCAB BRACE TO BE SAME SPECIES AND GRADE OR BETTER THAN WEB MEMBER UNLESS SPECIFIED OTHERWISE ON ENGINEER'S SEALED DESIGN.

(*) CENTER SCAB ON WIDE FACE OF WEB. APPLY (1) SCAB TO EACH FACE OF WEB.

T-BRACING OR L-BRACING:

APPLY TO EITHER SIDE OF WEB NARROW FACE

ATTACH WITH 16d NAILS AT 6" O.C.

BRACE IS A MINIMUM 80% OF WEB MEMBER LENGTH

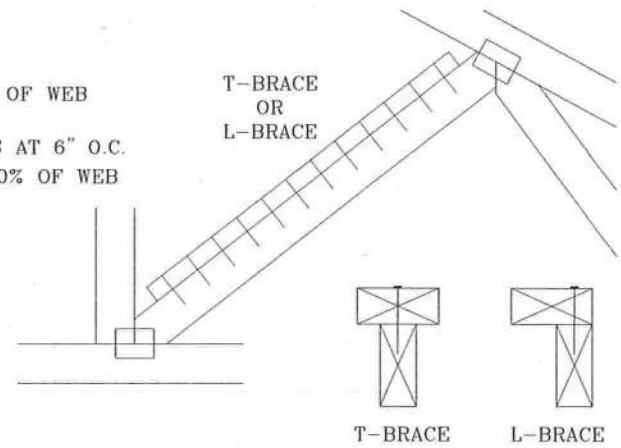

SCAB BRACING:

APPLY SCAB(S) TO WIDE FACE OF WEB.

NO MORE THAN (1) SCAB PER FACE.

ATTACH WITH 10d OR .128"x3" GUN NAILS AT 6" O.C. BRACE IS A MINIMUM 80% OF WEB MEMBER LENGTH

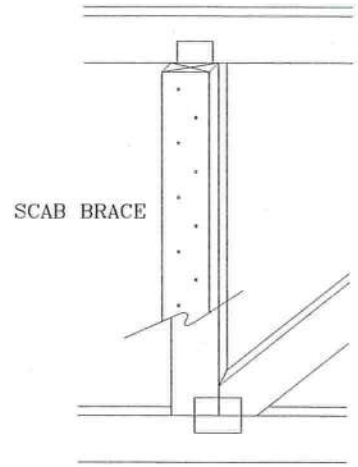

THIS DRAWING REPLACES DRAWING 579,640

ALPINE

ALPINE ENGINEERED PRODUCTS, INC.
POMPANO BEACH, FLORIDA

WARNING TRUSSES REQUIRE EXTREME CARE IN FABRICATING, HANDLING, SHIPPING, INSTALLING AND BRACING. REFER TO BCSI 1-03 (BUILDING COMPONENT SAFETY INFORMATION), PUBLISHED BY TPI (TRUSS PLATE INSTITUTE, 583 D'ONOFRIO DR., SUITE 200, MADISON, WI. 53719) AND WTCA (WOOD TRUSS COUNCIL OF AMERICA, 6300 ENTERPRISE LN, MADISON, WI 53719) FOR SAFETY PRACTICES PRIOR TO PERFORMING THESE FUNCTIONS. UNLESS OTHERWISE INDICATED, TOP CHORD SHALL HAVE PROPERLY ATTACHED STRUCTURAL PANELS AND BOTTOM CHORD SHALL HAVE A PROPERLY ATTACHED RIGID CEILING.

IMPORTANT FURNISH COPY OF THIS DESIGN TO INSTALLATION CONTRACTOR. ALPINE ENGINEERED PRODUCTS, INC., SHALL NOT BE RESPONSIBLE FOR ANY DEVIATION FROM THIS DESIGN; ANY FAILURE TO BUILD THE TRUSS IN CONFORMANCE WITH TPI; OR FABRICATING, HANDLING, SHIPPING, INSTALLING & BRACING OF TRUSSES. DESIGN CONFORMS WITH APPLICABLE PROVISIONS OF NDS (NATIONAL DESIGN SPEC' BY AF&PA) AND TPI. ALPINE CONNECTOR PLATES ARE MADE OF 20/18/16GA (W,H/S/K) ASTM A653 GRADE 40/60 (W,K/H,S) GALV. STEEL. APPLY PLATES TO EACH FACE OF TRUSS AND, UNLESS OTHERWISE LOCATED ON THIS DESIGN, POSITION PER DRAWINGS 160A-Z. ANY INSPECTION OF PLATES FOLLOWED BY (I) SHALL BE PER ANNEX A3 OF TPI 1-2002 SEC. 3. A SEAL ON THIS DRAWING INDICATES ACCEPTANCE OF PROFESSIONAL ENGINEERING RESPONSIBILITY SOLELY FOR THE TRUSS COMPONENT DESIGN SHOWN. THE SUITABILITY AND USE OF THIS COMPONENT FOR ANY BUILDING IS THE RESPONSIBILITY OF THE BUILDING DESIGNER, PER ANSI/TPI 1 SEC. 2.

ARTHUR R. FISHER
LICENSE
No. 59637
STATE OF
08/04/2015
FLORIDA
PROFESSIONAL ENGINEER

TC LL	PSF	REF	CLB SUBST.
TC DL	PSF	DATE	11/26/03
BC DL	PSF	DRWG	BRCLBSUB1103
BC LL	PSF	-ENG	MLH/KAR
TOT. LD.	PSF		
DUR. FAC.			
SPACING			

ASCE 7-98: 110 MPH WIND SPEED, 30' MEAN HEIGHT, ENCLOSED, I = 1.00, EXPOSURE C

MAX GABLE VERTICAL LENGTH

2X4 GABLE VERTICAL SPACING	SPECIES	BRACE / GRADE	NO BRACES	(1) 1X4 "L" BRACE * GROUP A	(1) 1X4 "L" BRACE * GROUP B	(1) 2X4 "L" BRACE * GROUP A	(1) 2X4 "L" BRACE * GROUP B	(2) 2X4 "L" BRACE ** GROUP A	(2) 2X4 "L" BRACE ** GROUP B	(1) 2X6 "L" BRACE * GROUP A	(1) 2X6 "L" BRACE * GROUP B	(2) 2X6 "L" BRACE ** GROUP A	(2) 2X6 "L" BRACE ** GROUP B
24" O.C.	SPF HF	#1 / #2	3' 8"	6' 4"	6' 6"	7' 6"	7' 8"	8' 11"	9' 2"	11' 9"	12' 1"	14' 0"	14' 0"
		#3	3' 7"	5' 5"	5' 5"	7' 2"	7' 2"	8' 11"	8' 11"	11' 2"	11' 2"	14' 0"	14' 0"
		STUD	3' 7"	5' 5"	5' 5"	7' 1"	7' 1"	8' 11"	8' 11"	11' 1"	11' 1"	14' 0"	14' 0"
		STANDARD	3' 7"	4' 8"	4' 8"	6' 1"	6' 1"	8' 3"	8' 3"	9' 6"	9' 6"	12' 11"	12' 11"
	SP DFL	#1	4' 0"	6' 4"	6' 10"	7' 6"	8' 1"	8' 11"	9' 7"	11' 9"	12' 8"	14' 0"	14' 0"
		#2	3' 11"	6' 4"	6' 10"	7' 6"	8' 1"	8' 11"	9' 7"	11' 9"	12' 8"	14' 0"	14' 0"
		#3	3' 9"	5' 7"	5' 7"	7' 4"	7' 4"	8' 11"	9' 5"	11' 5"	11' 5"	14' 0"	14' 0"
		STUD	3' 9"	5' 6"	5' 6"	7' 3"	7' 3"	8' 11"	9' 5"	11' 4"	11' 4"	14' 0"	14' 0"
		STANDARD	3' 8"	4' 9"	4' 9"	6' 3"	6' 3"	8' 5"	8' 5"	9' 9"	9' 9"	13' 3"	14' 0"
16" O.C.	SPF HF	#1 / #2	4' 2"	7' 3"	7' 5"	8' 7"	8' 10"	10' 3"	10' 6"	13' 5"	13' 10"	14' 0"	14' 0"
		#3	4' 1"	6' 8"	6' 8"	8' 7"	8' 7"	10' 3"	10' 3"	13' 5"	13' 5"	14' 0"	14' 0"
		STUD	4' 1"	8' 0"	8' 0"	8' 7"	8' 7"	10' 3"	10' 3"	13' 5"	13' 5"	14' 0"	14' 0"
		STANDARD	4' 1"	5' 8"	5' 8"	7' 6"	7' 6"	10' 1"	10' 1"	11' 8"	11' 8"	14' 0"	14' 0"
	SP DFL	#1	4' 7"	7' 3"	7' 9"	8' 7"	9' 3"	10' 3"	11' 0"	13' 5"	14' 0"	14' 0"	14' 0"
		#2	4' 6"	7' 3"	7' 9"	8' 7"	9' 3"	10' 3"	11' 0"	13' 5"	14' 0"	14' 0"	14' 0"
		#3	4' 4"	6' 10"	6' 10"	8' 7"	9' 0"	10' 3"	10' 9"	13' 5"	14' 0"	14' 0"	14' 0"
		STUD	4' 4"	6' 9"	6' 9"	8' 7"	8' 11"	10' 3"	10' 9"	13' 5"	14' 0"	14' 0"	14' 0"
		STANDARD	4' 2"	5' 10"	5' 10"	7' 8"	7' 8"	10' 3"	10' 4"	11' 11"	11' 11"	14' 0"	14' 0"
12" O.C.	SPF HF	#1 / #2	4' 7"	8' 0"	8' 2"	9' 5"	9' 8"	11' 3"	11' 7"	14' 0"	14' 0"	14' 0"	14' 0"
		#3	4' 6"	7' 8"	7' 8"	9' 5"	9' 5"	11' 3"	11' 3"	14' 0"	14' 0"	14' 0"	14' 0"
		STUD	4' 6"	7' 8"	7' 8"	9' 5"	9' 5"	11' 3"	11' 3"	14' 0"	14' 0"	14' 0"	14' 0"
		STANDARD	4' 6"	6' 7"	6' 7"	8' 8"	8' 8"	11' 3"	11' 3"	13' 6"	13' 6"	14' 0"	14' 0"
	SP DFL	#1	5' 1"	8' 0"	8' 7"	9' 5"	10' 2"	11' 3"	12' 1"	14' 0"	14' 0"	14' 0"	14' 0"
		#2	4' 11"	8' 0"	8' 7"	9' 5"	10' 2"	11' 3"	12' 1"	14' 0"	14' 0"	14' 0"	14' 0"
		#3	4' 9"	7' 11"	7' 11"	9' 5"	9' 11"	11' 3"	11' 10"	14' 0"	14' 0"	14' 0"	14' 0"
		STUD	4' 9"	7' 9"	7' 9"	9' 5"	9' 11"	11' 3"	11' 10"	14' 0"	14' 0"	14' 0"	14' 0"
		STANDARD	4' 7"	6' 9"	6' 9"	8' 10"	8' 10"	11' 3"	11' 7"	13' 10"	13' 10"	14' 0"	14' 0"

BRACING GROUP SPECIES AND GRADES:

GROUP A:

SPRUCE-PINE-FIR

#1 / #2	STANDARD
#3	STUD

HEM-FIR

#2	STUD
#3	STANDARD

DOUGLAS FIR-LARCH

#3
STUD
STANDARD

SOUTHERN PINE

#3
STUD
STANDARD

GROUP B:

HEM-FIR

#1 & BTR
#1

SOUTHERN PINE

#1
#2

DOUGLAS FIR-LARCH

#1
#2

GABLE TRUSS DETAIL NOTES:

LIVE LOAD DEFLECTION CRITERIA IS L/240.

PROVIDE UPLIFT CONNECTIONS FOR 100 PLF OVER CONTINUOUS BEARING (5 PSF TC DEAD LOAD).

GABLE END SUPPORTS LOAD FROM 4' 0" OUTLOOKERS WITH 2' 0" OVERHANG, OR 12" PLYWOOD OVERHANG.

ATTACH EACH "L" BRACE WITH 10d NAILS.

* FOR (1) "L" BRACE: SPACE NAILS AT 2" O.C. IN 18" END ZONES AND 4" O.C. BETWEEN ZONES.

** FOR (2) "L" BRACES: SPACE NAILS AT 3" O.C. IN 18" END ZONES AND 6" O.C. BETWEEN ZONES.

"L" BRACING MUST BE A MINIMUM OF 80% OF WEB MEMBER LENGTH.

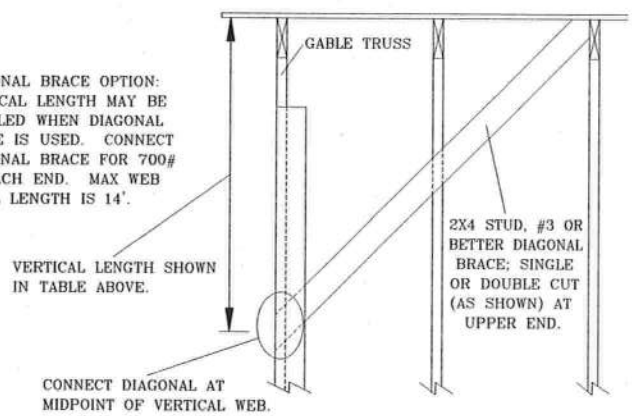

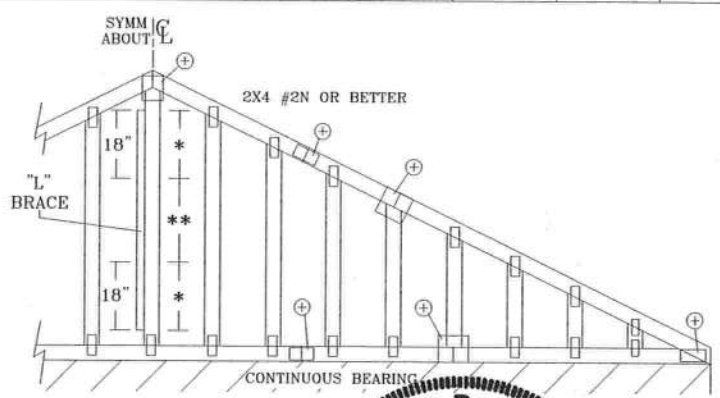

REFER TO CHART ABOVE FOR MAX. GABLE VERTICAL LENGTH.

GABLE VERTICAL PLATE SIZES

VERTICAL LENGTH	NO SPLICE
LESS THAN 4' 0"	1X4 OR 2X3
GREATER THAN 4' 0", BUT LESS THAN 11' 6"	2X4
GREATER THAN 11' 6"	2.5X4

\+ REFER TO COMMON TRUSS DESIGN FOR PEAK, SPLICE, AND HEEL PLATES.

ALPINE

ALPINE ENGINEERED PRODUCTS, INC.
POMPANO BEACH, FLORIDA

WARNING TRUSSES REQUIRE EXTREME CARE IN FABRICATING, HANDLING, SHIPPING, INSTALLING AND BRACING. REFER TO BCSI 1-03 (BUILDING COMPONENT SAFETY INFORMATION), PUBLISHED BY TPI (TRUSS PLATE INSTITUTE, 583 D'ONOFRIO DR., SUITE 200, MADISON, WI. 53719) AND WTCA (WOOD TRUSS COUNCIL OF AMERICA, 6300 ENTERPRISE LN, MADISON, WI 53719) FOR SAFETY PRACTICES PRIOR TO PERFORMING THESE FUNCTIONS. UNLESS OTHERWISE INDICATED, TOP CHORD SHALL HAVE PROPERLY ATTACHED STRUCTURAL PANELS AND BOTTOM CHORD SHALL HAVE A PROPERLY ATTACHED RIGID CEILING.

IMPORTANT FURNISH COPY OF THIS DESIGN TO INSTALLATION CONTRACTOR. ALPINE ENGINEERED PRODUCTS, INC., SHALL NOT BE RESPONSIBLE FOR ANY DEVIATION FROM THIS DESIGN; ANY FAILURE TO BUILD THE TRUSS IN CONFORMANCE WITH TPI; OR FABRICATING, HANDLING, SHIPPING, INSTALLING & BRACING OF TRUSSES. DESIGN CONFORMS WITH APPLICABLE PROVISIONS OF NDS (NATIONAL DESIGN SPEC. BY AF&PA) AND TPI. ALPINE CONNECTOR PLATES ARE MADE OF 20/18/16GA (W,H/S/K) ASTM A653 GRADE 40/60 (W,K/H,S) GALV. STEEL. APPLY PLATES TO EACH FACE OF TRUSS AND, UNLESS OTHERWISE LOCATED ON THIS DESIGN, POSITION PER DRAWINGS 160A-Z. ANY INSPECTION OF PLATES FOLLOWED BY (I) SHALL BE PER ANNEX A3 OF TPI 1-2002 SEC. 3. A SEAL ON THIS DRAWING INDICATES ACCEPTANCE OF PROFESSIONAL ENGINEERING RESPONSIBILITY SOLELY FOR THE TRUSS COMPONENT DESIGN SHOWN. THE SUITABILITY AND USE OF THIS COMPONENT FOR ANY BUILDING IS THE RESPONSIBILITY OF THE BUILDING DESIGNER, PER ANSI/TPI 1 SEC. 2.

ARTHUR R. FISHER
LICENSE
No. 59687
STATE OF FLORIDA
08/04/2005
PROFESSIONAL ENGINEER

MAX. TOT. LD. 60 PSF

MAX. SPACING 24.0"

REF	ASCE7-98-GAB11030
DATE	11/26/03
DRWG	A11030EC1103
-ENG	

GABLE DETAIL
FOR LET-IN VERTICALS

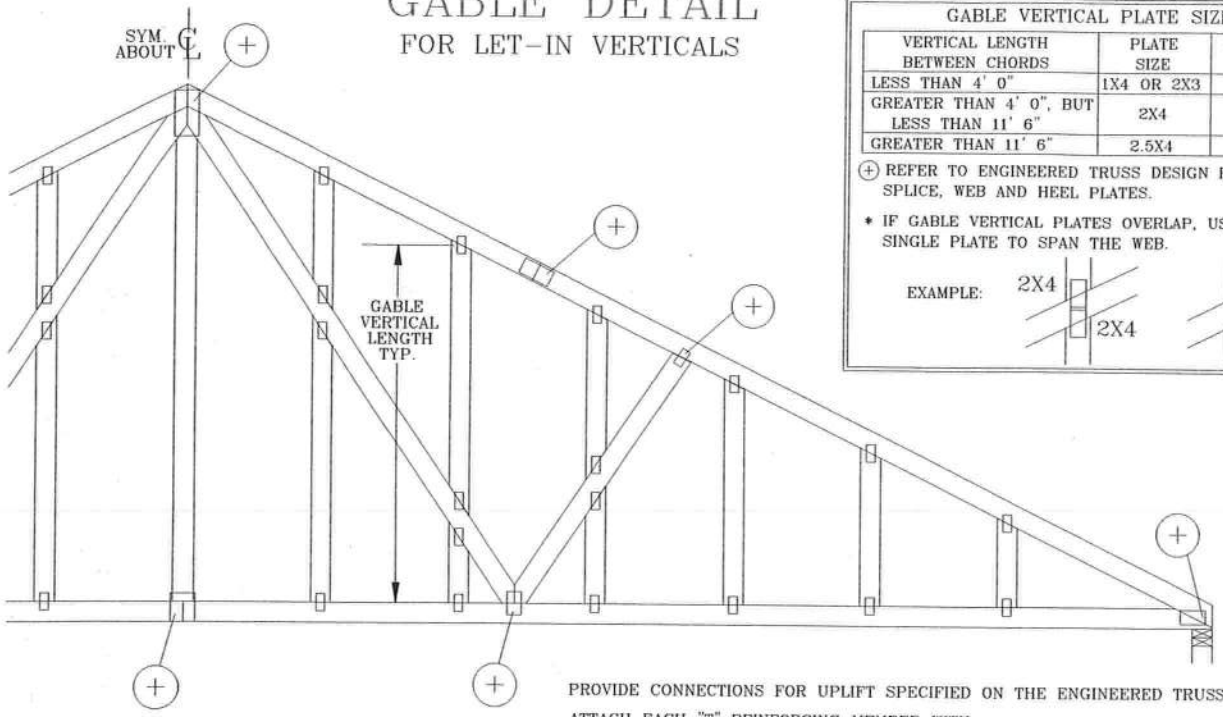

GABLE VERTICAL PLATE SIZES

VERTICAL LENGTH BETWEEN CHORDS	PLATE SIZE	IF PLATES OVERLAP*
LESS THAN 4' 0"	1X4 OR 2X3	2X8
GREATER THAN 4' 0", BUT LESS THAN 11' 6"	2X4	2X8
GREATER THAN 11' 6"	2.5X4	2.5X8

(+) REFER TO ENGINEERED TRUSS DESIGN FOR PEAK, SPLICE, WEB AND HEEL PLATES.

* IF GABLE VERTICAL PLATES OVERLAP, USE A SINGLE PLATE TO SPAN THE WEB.

EXAMPLE:

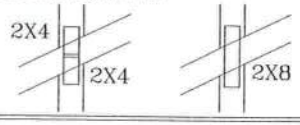

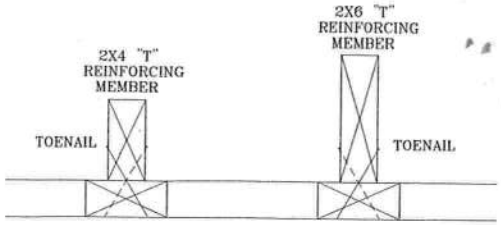

TO CONVERT FROM "L" TO "T" REINFORCING MEMBERS, MULTIPLY "T" FACTOR BY LENGTH (BASED ON GABLE VERTICAL SPECIES, GRADE AND SPACING) FOR (1) 2X4 "L" BRACE, GROUP A, OBTAINED FROM THE APPROPRIATE ALPINE GABLE DETAIL FOR ASCE OR SBCCI WIND LOAD.

MAXIMUM ALLOWABLE "T" REINFORCED GABLE VERTICAL LENGTH IS 14' FROM TOP TO BOTTOM CHORD.

WEB LENGTH INCREASE W/ "T" BRACE

WIND SPEED AND MRH	"T" REINF. MBR. SIZE	SBCCI	ASCE
110 MPH	2x4	10 %	10 %
15 FT	2x6	40 %	50 %
110 MPH	2x4	10 %	10 %
30 FT	2x6	50 %	50 %
100 MPH	2x4	10 %	10 %
15 FT	2x6	30 %	50 %
100 MPH	2x4	10 %	10 %
30 FT	2x6	40 %	40 %
90 MPH	2x4	20 %	10 %
15 FT	2x6	20 %	40 %
90 MPH	2x4	10 %	10 %
30 FT	2x6	30 %	50 %
80 MPH	2x4	10 %	20 %
15 FT	2x6	10 %	30 %
80 MPH	2x4	20 %	10 %
30 FT	2x6	20 %	40 %
70 MPH	2x4	0 %	20 %
15 FT	2x6	0 %	20 %
70 MPH	2x4	10 %	20 %
30 FT	2x6	10 %	30 %

EXAMPLE:
ASCE WIND SPEED = 100 MPH
MEAN ROOF HEIGHT = 30 FT
GABLE VERTICAL = 24" O.C. SP #3
"T" REINFORCING MEMBER SIZE = 2X4
"T" BRACE INCREASE (FROM ABOVE) = 10% = 1.10
(1) 2X4 "L" BRACE LENGTH = 6' 7"
MAXIMUM "T" REINFORCED GABLE VERTICAL LENGTH
1.10 x 6' 7" = 7' 3"

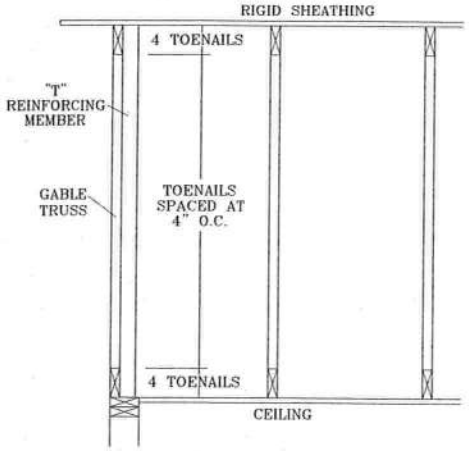

PROVIDE CONNECTIONS FOR UPLIFT SPECIFIED ON THE ENGINEERED TRUSS DESIGN.

ATTACH EACH "T" REINFORCING MEMBER WITH
HAND DRIVEN NAILS:
10d COMMON TOENAILS AT 4" O.C. PLUS (4) 16d COMMON TOENAILS IN TOP AND BOTTOM CHORD.
GUN DRIVEN NAILS - 0.131" X 3":
TOENAILS AT 4" O.C. PLUS (4) TOENAILS IN TOP AND BOTTOM CHORD.

THIS DETAIL TO BE USED WITH THE APPROPRIATE ALPINE GABLE DETAIL FOR ASCE OR SBCCI WIND LOAD.
ASCE 7-93 GABLE DETAIL DRAWINGS
A11015EN1103, A10015EN1103, A09015EN1103, A08015EN1103, A07015EN1103
A11030EN1103, A10030EN1103, A09030EN1103, A08030EN1103, A07030EN1103
ASCE 7-98 GABLE DETAIL DRAWINGS
A13015EC1103, A12015EC1103, A11015EC1103, A10015EC1103, A08515EC1103
A13030EC1103, A12030EC1103, A11030EC1103, A10030EC1103, A08530EC1103
SBCCI GABLE DETAIL DRAWINGS
S11015EN1103, S10015EN1103, S09015EN1103, S08015EN1103, S07015EN1103
S11030EN1103, S10030EN1103, S09030EN1103, S08030EN1103, S07030EN1103

SEE APPROPRIATE ALPINE GABLE DETAIL (ASCE OR SBCCI WIND LOAD) FOR MAXIMUM UNREINFORCED GABLE VERTICAL LENGTH.

THIS DRAWING REPLACES DRAWINGS GAB98117 876,719 & HC26294035

ALPINE
ALPINE ENGINEERED PRODUCTS, INC.
POMPANO BEACH, FLORIDA

WARNING TRUSSES REQUIRE EXTREME CARE IN FABRICATING, HANDLING, SHIPPING, INSTALLING AND BRACING. REFER TO BCSI 1-03 (BUILDING COMPONENT SAFETY INFORMATION), PUBLISHED BY TPI (TRUSS PLATE INSTITUTE, 583 D'ONOFRIO DR., SUITE 200, MADISON, WI. 53719) AND WTCA (WOOD TRUSS COUNCIL OF AMERICA, 6300 ENTERPRISE LN, MADISON, WI 53719) FOR SAFETY PRACTICES PRIOR TO PERFORMING THESE FUNCTIONS. UNLESS OTHERWISE INDICATED, TOP CHORD SHALL HAVE PROPERLY ATTACHED STRUCTURAL PANELS AND BOTTOM CHORD SHALL HAVE A PROPERLY ATTACHED RIGID CEILING.

IMPORTANT FURNISH COPY OF THIS DESIGN TO INSTALLATION CONTRACTOR. ALPINE ENGINEERED PRODUCTS, INC., SHALL NOT BE RESPONSIBLE FOR ANY DEVIATION FROM THIS DESIGN; ANY FAILURE TO BUILD THE TRUSS IN CONFORMANCE WITH TPI; OR FABRICATING, HANDLING, SHIPPING, INSTALLING & BRACING OF TRUSSES. DESIGN CONFORMS WITH APPLICABLE PROVISIONS OF NDS (NATIONAL DESIGN SPEC. BY AF&PA) AND TPI. ALPINE CONNECTOR PLATES ARE MADE OF 20/18/16GA (W,H/S/K) ASTM A653 GRADE 40/60 (W,K/H,S) GALV. STEEL. APPLY PLATES TO EACH FACE OF TRUSS AND, UNLESS OTHERWISE LOCATED ON THIS DESIGN, POSITION PER DRAWINGS 160A-Z. ANY INSPECTION OF PLATES FOLLOWED BY (I) SHALL BE PER ANNEX A3 OF TPI 1-2002 SEC. 3. A SEAL ON THIS DRAWING INDICATES ACCEPTANCE OF PROFESSIONAL ENGINEERING RESPONSIBILITY SOLELY FOR THE TRUSS COMPONENT DESIGN SHOWN. THE SUITABILITY AND USE OF THIS COMPONENT FOR ANY BUILDING IS THE RESPONSIBILITY OF THE BUILDING DESIGNER, PER ANSI/TPI 1 SEC. 2.

ARTHUR R. FISHER
LICENSED
No. 59687
STATE OF FLORIDA
08/04/2005
PROFESSIONAL ENGINEER

MAX TOT. LD.	60 PSF
DUR. FAC.	ANY
MAX SPACING	24.0"

REF	LET-IN VERT
DATE	01/16/04
DRWG	GBLLETIN1103
-ENG	DLJ/KAR

ATTN: WEEGIE:

Columbia County Building Department
Culvert Waiver

Culvert Waiver No. 000000854

DATE: 10/20/2005 BUILDING PERMIT NO. 23743

APPLICANT PAUL ANTHONY BROWN PHONE 386.235.5021

ADDRESS 177 SW PETER COYLE CT LAKE CITY FL 32024

OWNER PAUL ANTHONY BROWN PHONE 386.235.5021

ADDRESS 177 SW PETER COYLE CT LAKE CITY FL 32024

CONTRACTOR PAUL ANTHONY BROWN PHONE 386.235.5021

LOCATION OF PROPERTY C-341-S TO UNDER OVERPASS TO CREEKSIDE S/D,TR INTO ENTRANCE TO PETER COYLE CT,TR GO TO END OF RD ON R TO OT 24

SUBDIVISION/LOT/BLOCK/PHASE/UNIT CREEKSIDE 24

PARCEL ID # 12-4S-16-02939-124

I HEREBY CERTIFY THAT I UNDERSTAND AND WILL FULLY COMPLY WITH THE DECISION OF THE COLUMBIA COUNTY PUBLIC WORKS DEPARTMENT IN CONNECTION WITH THE HEREIN PROPOSED APPLICATION.

SIGNATURE:

A SEPARATE CHECK IS REQUIRED
MAKE CHECKS PAYABLE TO BCC

Amount Paid 50.00

PUBLIC WORKS DEPARTMENT USE ONLY

I HEREBY CERTIFY THAT I HAVE EXAMINED THIS APPLICATION AND DETERMINED THAT THE CULVERT WAIVER IS:

✓ APPROVED _____ NOT APPROVED - NEEDS A CULVERT PERMIT

COMMENTS:

SIGNED: DATE: 10/21/05

RECEIVED
OCT 24 2005
BY:

ANY QUESTIONS PLEASE CONTACT THE PUBLIC WORKS DEPARTMENT AT 386-752-5955.

135 NE Hernando Ave., Suite B-21
Lake City, FL 32055
Phone: 386-758-1008 Fax: 386-758-2160

COLUMBIA COUNTY GATEWAY TO FLORIDA

PAUL - A. BROWN
177 SW PETER COYLE CT
LAKE CITY FL 32025
TEL 386 269 3072

29th MARCH 07

Dear Building Dep,

Could you please extend my building PERMIT # 23743. Its taking a long time to build my House because Im doing the work myself

Thank you

Paul Brown

PERMIT # 23743 (TEL 352-
-7351497)
CREEKSIDE
LOT 24

PAUL A. BROWN.
177 S.W PETER(O)
LAKE CITY
FL

Dear Building and Zoning, 1st January 08

Please extend my BUILDING PERMIT #2374:
I am building the home myself and Its taking
a lot longer than I thought it would.

Thankyou
Paul Brown

"HAPPY NEW YEAR"

PAUL BROWN
2343 SABASTIAN ST.
MOUNT DORA, FL
32757

23743

Dear All,

Please could you extend my building permit # 23743. lot 24 CREEKSIDE.

Thank you.

My address in Mt. Dora is above and my telephone # is (352) 735-1497.

If you need to contact me.

Thanks again.

Paul

2343 SABASTIAN ST
MOUNT DORA
FL 32757.

177 S.W PETER COYL
LAKE CITY
FL.

Dear All,

Please could you extend my building Permit #23743 LOT 24 CREEKSIDE. I am building the home myself and its taking forever. I am also working in ORLANDO right now, my address here is 2343 SABASTIAN ST MOUNT DORA FL 32757 TEL. 352-735-1497.

Thank you for all your help

Paul Brown

PAUL BROWN.

MOUNT DORA ADD.
2343 SABASTIAN ST.
MT. DORA FL
32757

LAKE CITY ADD:
177 SW PyterCoyle Ct
LAKE CITY FL

Dear All,

Please could you extend my building permit # 23743, LOT 24 CREEKSIDE.

I am building it myself and it's taking forever, I am also working in Orlando right now. My address down here is 2343 SABASTIAN ST. MOUNT DORA FL 32757

TEL: (352) 735-1497

Thanks for all your help.

PAUL BROWN

MOUNT DORA ADDRESS
2343 SABASTIAN ST
MOUNT DORA
FL. 32757
TEL 352 735 1497

LAKE CITY ADDRESS
177. SW PETER
COYLECT
LAKE CITY
FL.

Dear All

I'm still working in Orlando so I haven't been able to work on my house. Could you please extend my Building Permit # 23743 LOT 24 CREEKSIDE.

Thanks for all your help.

Paul Brown

PAUL BROWN.

PAUL BROWN.
2343 SABASTIAN ST.
MOUNT DORA.
FL 32757.
TEL 352 735 1497.

Dear all, Please could you extend my building PERMIT # 23743. for LOT 24 CREEKSIDE I hope to finish the house this year.

Thanks for your help.

Paul

PAUL BROWN #23743

2343 Sabastian St.

Mount Dora, FL 23757

Dear all,

Please could you extend my building permit #23743, lot 24 CREEKSIDE.

Thank you.

My address in Mount Dora is above and my telephone # is 352-735-1497.

If you need to contact me.

Thanks again.

Paul Brown

PAUL BROWN.
2343 SABASTIAN ST.
MOUNT DORA.
FL. 32757.

#23743.

Dear all,

Please could you extend my building PERMIT. # 23743., LOT 24 CREEKSIDE. Thank you my address in MT DORA is above, and my telephone # is 352 735 1497. if you need to contact me.

thanks again

Paul

PAUL BROWN #23743

2343 Sabastian St.

Mount Dora, FL 23757

Dear all,

Please could you extend my building permit #23743, lot 24 CREEKSIDE.

Thank you.

My address in Mount Dora is above and my telephone # is 352-735-1497.

If you need to contact me.

Thanks again.

Paul Brown

PAUL BROWN #23743

2343 Sabastian St.

Mount Dora, FL 23757

Dear all,

Please could you extend my building permit #23743, lot 24 CREEKSIDE.

Thank you.

My address in Mount Dora is above and my telephone # is 352-735-1497.

If you need to contact me.

Thanks again.

Paul Brown

PAUL BROWN #23743

2343 Sabastian St.

Mount Dora, FL 23757

Dear all,

Please could you extend my building permit #23743, lot 24 CREEKSIDE.

Thank you.

My address in Mount Dora is above and my telephone # is 352-735-1497.

If you need to contact me.

Thanks again.

Paul Brown

PAUL BROWN #23743

2343 Sabastian St.

Mount Dora, FL 23757

Dear all,

Please could you extend my building permit #23743, lot 24 CREEKSIDE.

Thank you.

My address in Mount Dora is above and my telephone # is 352-735-1497.

If you need to contact me.

Thanks again.

Paul Brown

PAUL BROWN #23743

2343 Sabastian St.

Mount Dora, FL 23757

Dear all,

Please could you extend my building permit #23743, lot 24 CREEKSIDE.

Thank you.

My address in Mount Dora is above and my telephone # is 352-735-1497.

If you need to contact me.

Thanks again.

Paul Brown

23743

Freeman Design Group inc
Engineers • Planners

161 N.W. Madison St., Suite 102
Lake City, Florida 32055
Tel: 386-758-4209
Fax: 386-758-4290

October 25, 2005

Columbia County Building and Zoning

RE: Lot 24 Creekside Subdivision

To whom it may concern:

I have reviewed the Flood Insurance Rate Map and have determined the property is not located in a flood zone. I have performed a site evaluation of the existing area. I certify that placing the finished floor elevation at least 12" above existing grade is adequate to prevent flood and water damage. Grade the perimeter so that all runoff drains away from the building.

Sincerely,

William H. Freeman

William H. Freeman, P.E.
President
Cert. Of Authorization #00008701

COLUMBIA COUNTY BUILDING DEPARTMENT

RESIDENTIAL MINIMUM PLAN REQUIREMENTS AND CHECKLIST FOR FLORIDA BUILDING CODE 2001
ONE (1) AND TWO (2) FAMILY DWELLINGS

ALL REQUIREMENTS ARE SUBJECT TO CHANGE
EFFECTIVE MARCH 1, 2002

ALL BUILDING PLANS MUST INDICATE THE FOLLOWING ITEMS AND INDICATE COMPLIANCE WITH CHAPTER 1606 OF THE FLORIDA BUILDING CODE 2001 BY PROVIDING CALCULATIONS AND DETAILS THAT HAVE THE SEAL AND SIGNATURE OF A CERTIFIED ARCHITECT OR ENGINEER REGISTERED IN THE STATE OF FLORIDA, OR ALTERNATE METHODOLOGIES, APPROVED BY THE STATE OF FLORIDA BUILDING COMMISSION FOR ONE-AND-TWO FAMILY DWELLINGS. FOR DESIGN PURPOSES THE FOLLOWING BASIC WIND SPEED AS PER FIGURE 1606 SHALL BE USED.

WIND SPEED LINE SHALL BE DEFINED AS FOLLOWS: THE CENTERLINE OF INTERSTATE 75.
1. ALL BUILDINGS CONSTRUCTED EAST OF SAID LINE SHALL BE -------- 100 MPH
2. ALL BUILDINGS CONSTRUCTED WEST OF SAID LINE SHALL BE --------110 MPH
3. NO AREA IN COLUMBIA COUNTY IS IN A WIND BORNE DEBRIS REGION

APPLICANT – PLEASE CHECK ALL APPLICABLE BOXES BEFORE SUBMITTAL

GENERAL REQUIREMENTS; Two (2) complete sets of plans containing the following:

Applicant	Plans Examiner	
☒	☐	All drawings must be clear, concise and drawn to scale ("Optional " details that are not used shall be marked void or crossed off). Square footage of different areas shall be shown on plans.
☒	☐	Designers name and signature on document (FBC 104.2.1). If licensed architect or engineer, official seal shall be affixed.
☒	☐	**Site Plan including:** a) Dimensions of lot b) Dimensions of building set backs c) Location of all other buildings on lot, well and septic tank if applicable, and all utility easements. d) Provide a full legal description of property.
☒	☐	**Wind-load Engineering Summary, calculations and any details required** a) Plans or specifications must state compliance with FBC Section 1606 b) The following information must be shown as per section 1606.1.7 FBC a. Basic wind speed (MPH) b. Wind importance factor (I) and building category c. Wind exposure – if more than one wind exposure is used, the wind exposure and applicable wind direction shall be indicated d. The applicable internal pressure coefficient e. Components and Cladding. The design wind pressure in terms of psf (kN/m²), to be used for the design of exterior component and cladding materials not specifically designed by the registered design professional
☒	☐	**Elevations including:**
☒	☐	a) All sides 29' 10 5/32
☒	☐	b) Roof pitch 10/12
☒	☐	c) Overhang dimensions and detail with attic ventilation
☒	☐	d) Location, size and height above roof of chimneys
☒	☐	e) Location and size of skylights
☒	☐	f) Building height 29' 10 5/32
☒	☐	e) Number of stories 2

Floor Plan including:

a) Rooms labeled and dimensioned

b) Shear walls

c) Windows and doors (including garage doors) showing size, mfg., approval listing and attachment specs. (FBC 1707) and safety glazing where needed (egress windows in bedrooms to be shown)

d) Fireplaces (gas appliance) (vented or non-vented) or wood burning with hearth

e) Stairs with dimensions (width, tread and riser) and details of guardrails and handrails

f) Must show and identify accessibility requirements (accessible bathroom)

Foundation Plan including:

a) Location of all load-bearing wall with required footings indicated as standard Or monolithic and dimensions and reinforcing

b) All posts and/or column footing including size and reinforcing

c) Any special support required by soil analysis such as piling

d) Location of any vertical steel

Roof System:

a) Truss package including:

1. Truss layout and truss details signed and sealed by Fl. Pro. Eng.
2. Roof assembly (FBC 104.2.1 Roofing system, materials, manufacturer, fastening requirements and product evaluation with wind resistance rating)

b) Conventional Framing Layout including:

1. Rafter size, species and spacing
2. Attachment to wall and uplift
3. Ridge beam sized and valley framing and support details
4. Roof assembly (FBC 104.2.1 Roofing systems, materials, manufacturer, fastening requirements and product evaluation with wind resistance rating)

Wall Sections including:

a) Masonry wall

1. All materials making up wall
2. Block size and mortar type with size and spacing of reinforcement
3. Lintel, tie-beam sizes and reinforcement
4. Gable ends with rake beams showing reinforcement or gable truss and wall bracing details
5. All required connectors with uplift rating and required number and size of fasteners for continuous tie from roof to foundation
6. Roof assembly shown here or on roof system detail (FBC 104.2.1 Roofing system, materials, manufacturer, fastening requirements and product evaluation with resistance rating)
7. Fire resistant construction (if required)
8. Fireproofing requirements
9. Shoe type of termite treatment (termicide or alternative method)
10. Slab on grade
    a. Vapor retardant (6mil. Polyethylene with joints lapped 6 inches and sealed)
    b. Must show control joints, synthetic fiber reinforcement or Welded fire fabric reinforcement and supports
11. Indicate where pressure treated wood will be placed
12. Provide insulation R value for the following:
    a. Attic space
    b. Exterior wall cavity
    c. Crawl space (if applicable)

☐ ☐ **b) Wood frame wall**

1. All materials making up wall
2. Size and species of studs
3. Sheathing size, type and nailing schedule
4. Headers sized
5. Gable end showing balloon framing detail or gable truss and wall hinge bracing detail
6. All required fasteners for continuous tie from roof to foundation (truss anchors, straps, anchor bolts and washers)
7. Roof assembly shown here or on roof system detail (FBC104.2.1 Roofing system, materials, manufacturer, fastening requirements and product evaluation with wind resistance rating)
8. Fire resistant construction (if applicable)
9. Fireproofing requirements
10. Show type of termite treatment (termicide or alternative method)
11. Slab on grade
    a. Vapor retardant (6Mil. Polyethylene with joints lapped 6 inches and sealed
    b. Must show control joints, synthetic fiber reinforcement or welded wire fabric reinforcement and supports
12. Indicate where pressure treated wood will be placed
13. Provide insulation R value for the following:
    a. Attic space
    b. Exterior wall cavity
    c. Crawl space (if applicable)

☐ ☐ c) Metal frame wall and roof (designed, signed and sealed by Florida Prof. Engineer or Architect)

Floor Framing System:

☒ ☐ a) Floor truss package including layout and details, signed and sealed by Florida Registered Professional Engineer

☐ ☐ b) Floor joist size and spacing

☐ ☐ c) Girder size and spacing

☐ ☐ d) Attachment of joist to girder

☐ ☐ e) Wind load requirements where applicable

☒ ☐ **Plumbing Fixture layout**

Electrical layout including:

☒ ☐ a) Switches, outlets/receptacles, lighting and all required GFCI outlets identified

☒ ☐ b) Ceiling fans

☒ ☐ c) Smoke detectors

☒ ☐ d) Service panel and sub-panel size and location(s)

☒ ☐ e) Meter location with type of service entrance (overhead or underground)

☒ ☐ f) Appliances and HVAC equipment

☒ ☐ g) Arc Fault Circuits (AFCI) in bedrooms

HVAC information

☒ ☐ a) Manual J sizing equipment or equivalent computation

☒ ☐ b) Exhaust fans in bathroom

☒ ☐ **Energy Calculations** (dimensions shall match plans)

☐ ☐ **Gas System** Type (LP or Natural) Location and BTU demand of equipment

☒ ☐ **Disclosure Statement for Owner Builders**

☒ ☐ ***Notice Of Commencement Required Before Any Inspections Will Be Done

☒ ☐ **Private Potable Water**

a) Size of pump motor

b) Size of pressure tank

c) Cycle stop valve if used

THE FOLLOWING ITEMS MUST BE SUBMITTED WITH BUILDING PLANS

1. **Building Permit Application:** A current Building Permit Application form is to be completed and submitted for all residential projects.

2. **Parcel Number:** The parcel number (Tax ID number) from the Property Appraiser (386) 758-1084 is required. A copy of property deed is also requested.

3. **Environmental Health Permit or Sewer Tap Approval:** A copy of the Environmental Health permit, existing septic approval or sewer tap approval is required before a building permit can be issued.
   (386) 758-1058 **(Toilet facilities shall be provided for construction workers)**

4. **City Approval:** If the project is to be located within the city limits of the Town of Fort White, prior approval is required. The Town of Fort White approval letter is required to be submitted by the owner or contractor to this office when applying for a Building Permit. (386) 497-2321

5. **Flood Information:** All projects within the Floodway of the Suwannee or Santa Fe Rivers shall require permitting through the Suwannee River Water Management District, before submitting application to this office. Any project located within a flood zone where the base flood elevation (100 year flood) has been established shall meet the requirements of Section 8.8 of the Columbia County Land Development Regulations. Any project located within a flood zone where the base flood elevation has not been established (Zone A) shall meet the requirements of Section 8.7 of the Columbia County Land Development Regulations. **CERTIFIED FINISHED FLOOR ELEVATIONS WILL BE REQUIRED ON ANY PROJECT WHERE THE BASE FLOOD ELEVATION (100 YEAR FLOOD) HAS BEEN ESTABLISHED.**
   A development permit will also be required. Development permit cost is **$50.00**

6. **Driveway Connection:** If the property does not have an existing access to a public road, then an application for a culvert permit (**$25.00**) must be made. If the applicant feels that a culvert is not needed, they may apply for a culvert waiver (**$50.00**). All culvert waivers are sent to the Columbia County Public Works Department for approval or denial.

7. **911 Address:** If the project is located in an area where the 911 address has been issued, then the proper paperwork from the 911 Addressing Department must be submitted. (386) 752-8787

ALL REQUIRED INFORMATION IS TO BE SUBMITTED FOR REVIEW. YOU WILL BE NOTIFIED WHEN YOUR APPLICATION AND PLANS ARE APPROVED AND READY TO PERMIT. PLEASE DO NOT EXPECT OR REQUEST THAT PERMIT APPLICATIONS BE REVIEWED OR APPROVED WHILE YOU ARE HERE – TIME WILL NOT ALLOW THIS –PLEASE DO NOT ASK

NOTICE:

ADDRESSES BY APPOINTMENT ONLY!

TO OBTAIN A 9-1-1 ADDRESS THE REQUESTER MUST CONTACT THE COLUMBIA COUNTY 9-1-1 ADDRESSING DEPARTMENT AT (386) 752-8787 FOR AN APPOINTMENT TIME AND DATE:

YOU CAN NOT OBTAIN A NEW ADDRESS OVER THE TELEPHONE. MUST MAKE AN APPOINTMENT!

THE ADDRESSING DEPARTMENT IS LOCATED AT 263 NW LAKE CITY AVENUE (OFF OF WEST U.S. HIGHWAY 90 WEST OF INTERSTATE 75 AT THE COLUMBIA COUNTY EMERGENCY OPERATIONS CENTER).

THE REQUESTER WILL NEED THE FOLLOWING:

1. THE PARCEL OR TAX ID NUMBER (SAMPLE: "25-4S-17-12345-123" OR "R12345-123) FOR THE PROPERTY.
2. A PLAT, PLAN, SITE PLAN, OR DRAWING SHOWING THE PROPERTY LINES OF THE PARCEL.
   a. LOCATION OF PLANNED RESIDENT OR BUSINESS STRUCTURE ON THE PROPERTY WITH DISTANCES FROM TWO OF THE PROPERTY LINES TO THE STRUCTURE (SEE SAMPLE BELOW).
   b. LOCATION OF THE ACCESS POINT (DRIVEWAY, ETC.) ON THE ROADWAY FROM WHICH LOCATION IS TO BE ADDRESSED WITH A DISTANCE FROM A PARALLEL PROPERTY LINE AND OR PROPERTY CORNER (SEE SAMPLE BELOW).
   c. TRAVEL OF THE DRIVEWAY FROM THE ACCESS POINT TO THE STRUCTURE (SEE SAMPLE BELOW).

SAMPLE:

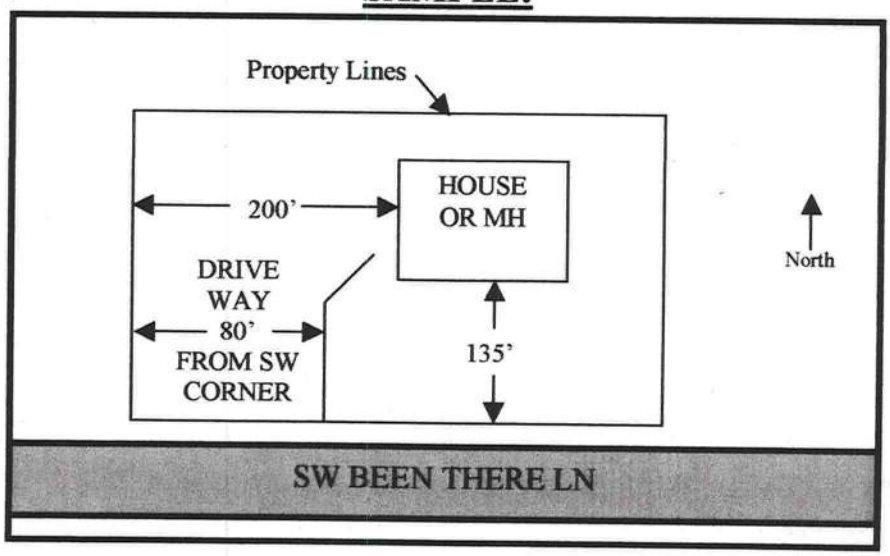

NOTE: 5 TO 7 WORKING DAYS MAY BE REQUIRED IF ADDRESSING DEPARTMENT NEEDS TO CONDUCT AN ON SITE SURVEY.

PAUL BROWN #23743

2343 Sabastian St.

Mount Dora, FL 23757

Dear all,

Please could you extend my building permit #23743, lot 24 CREEKSIDE.

Thank you.

My address in Mount Dora is above and my telephone # is 352-735-1497.

If you need to contact me.

Thanks again.

Paul Brown

PAUL BROWN #23743

2343 Sabastian St.

Mount Dora, FL 23757

Dear all,

Please could you extend my building permit #23743, lot 24 CREEKSIDE.

Thank you.

My address in Mount Dora is above and my telephone # is 352-735-1497.

If you need to contact me.

Thanks again.

Paul Brown

PAUL A. BROWN DEC 28th 2006
177 SW PETER COYLE CT
LAKE CITY FL
TEL 386 269 3072.

RE PERMIT #
23743

Dear Building and Zoning

Please extend my Building permit. I am building the house myself and its going to take a while, hoping by the end of 07

thankyou

Paul Brown

10/19/06.
PERMIT #
23743

PAUL A BROWN
177 SW PETER COYLE
LAKE CITY
FL 32025
TEL 386 2693072

Dear Building and Zoning,

I would like to extend my building permit by 90 DAYS, due to me being away from Lake City for a while this year and I am doing a lot of the work myself.

Thankyou

Paul Brown

Notice of Intent for Preventative Treatment for Termites

(As required by Florida Building Code 104.2.6) #23743

Date: 1-26-07

177 SW Peter Coyle Ct — Lake City

(Address of Treatment or Lot/Block of Treatment) — City

Florida Pest Control & Chemical Co.

www.flapest.com

Product to be used: Bora-Care Termiticide (Wood Treatment)

Chemical to be used: 23% Disodium Octaborate Tetrahydrate

Application will be performed onto structural wood at dried-in stage of construction. Bora-Care Termiticide application shall be applied according to EPA registered label directions as stated in the Florida Building Code Section 1816.1

(Information to be provided to local building code offices prior to concrete foundation installation.)

6/05 ©