Schafer Engineering LLC

14705 Main St. Alachua FL 32615

Prepared for:

JOHN NORRIS CONSTRUCTION
MOORE RESIDENCE
COLUMBIA COUNTY, FLORIDA

By:

Schafer Engineering, LLC

386-462-1340

COLUMBIA COUNTY BUILDING DEPARTMENT
Received
for
FILE COPY
Code
Compliance
PLANS EXAMINER

NO COPIES ARE TO BE PERMITTED

SCHAFER ENGINEERING, LLC

7104 NW 42ND LANE \ GAINESVILLE FL. 32606
PHONE: 386-462-1340

Trusses: Pre-engineered, pre-fabricated with the manufacturer's required bracing system installed.

Roof Sheathing: Type: OSB Size: 7/16" Fastener type nails: 8d / .113 Ring Shank

Interior zone spacing: Interior: 6" Periphery: 4"

Edge and end zone spacing: Interior: 6" Periphery: 4"

Double Top Plate: Type: Spruce Grade: #2 Size: 2 x 4 Nail Size & Spacing: 10d min" @ 8 o.c.

Stud Type: Spruce Grade: #2 Size: 2 x 4 min.

Interior stud spacing: 16" End stud spacing: 16"

Required Shear Wall Siding: Type: OSB Thickness: 7/16"

30 ft Trans: Fastener 8d/131 Spacing: Int: 8 Edge: 4"

27 ft Long: Fastener 8d/131 Spacing: Int: 8 Edge: 4"

Allowable Unit Shear on Shear Walls: 314 pounds per linear foot

Allowable Unit Shear Transferred from Diaphragm: Trans: 232 Long: 161

Wall Tension Transferred by: Siding Nails: 8d/131 @ 4" O.C. Edges

Foundation Anchor Bolts: Concrete Strength: 3000 psi Size: 1/2"

Washer: 2" Embedment: 7" Location of first anchor bolt from corner: 8"

Anchor Bolts @ 48" o.c. Model: A307 Loc. from corner: 8"

Type of Foundation: (1) – #5 rebar continuous required in bond beam.

Floor Slab: 4" Cmu size: 8" x 16" Height: 48" Rein.: #5 at 72" o.c.

Monolithic Footing: Depth: 20" Bottom Width: 12 Rein.: 2 #5 rebars

Stemwall Footing: Width: 20 Depth: 10 Rein.: 2 #5 rebar

Interior Footings 20" Wide X 12" Deep with 2-#5 rebar continuous

Porch Columns: 6 X 6 X 10' syp #2 pt @ 5'-8" o.c. max. spacing Column Fasteners: Simpson PC66 \ PBS66 or equal

Special Comments: Install 2 ply 2 x 12 syp #2 with 7/16" osb flitch beam or equal over all doors and windows.

Notes:

1. Balloon frame all gable ends unless accompanied by gable end detail
2. All walls to be nailed with same nailing pattern as the shear walls.
3. This wind load is not valid without a raised, embossed seal. (NO COPIES).
4. 1500 psf soil bearing pressure minimum.
5. Fiber mesh or WWM may be used in concrete slab. All steel must be grade 40 min. Install standard 10" ACI hook top and bottom.
6. Trusses must be installed and anchored in accordance to the truss engineering.
7. This is a windload only. Not a structural analysis. Schafer Engineering strongly recommends always having a structural analysis.
8. The foundation is for minimum design use, and may be increased.
9. Wind load is for one use only \ FBC-2020 \ No copies permitted
10. Install anchor bolts a 48" o.c., & Simpson SP1 at bottom plate and Simpson SP2 at top plate or equal @ 32" O.C. for all interior bearing walls.
11. Truss company to use all exterior porch walls for bearing when possible.
12. If soil conditions in this project do not meet or exceed the min. 1500 psf soil bearing capacity, the contractor is required to contact Schafer Engineering prior to the foundation pour for verification of the foundation design The soil is to be compacted to at least 95% of max. dry density as determined by ASTM-1557 (modified proctor)

8-29-22

Bruce Schafer, P. E. #48984
7104 NW 42ND LN
GAINESVILLE, FL. 32606

SCHAFER ENGINEERING, LLC
14705 MAIN STREET \ ALACHUA FL. 32615
PHONE: 386-462-1340

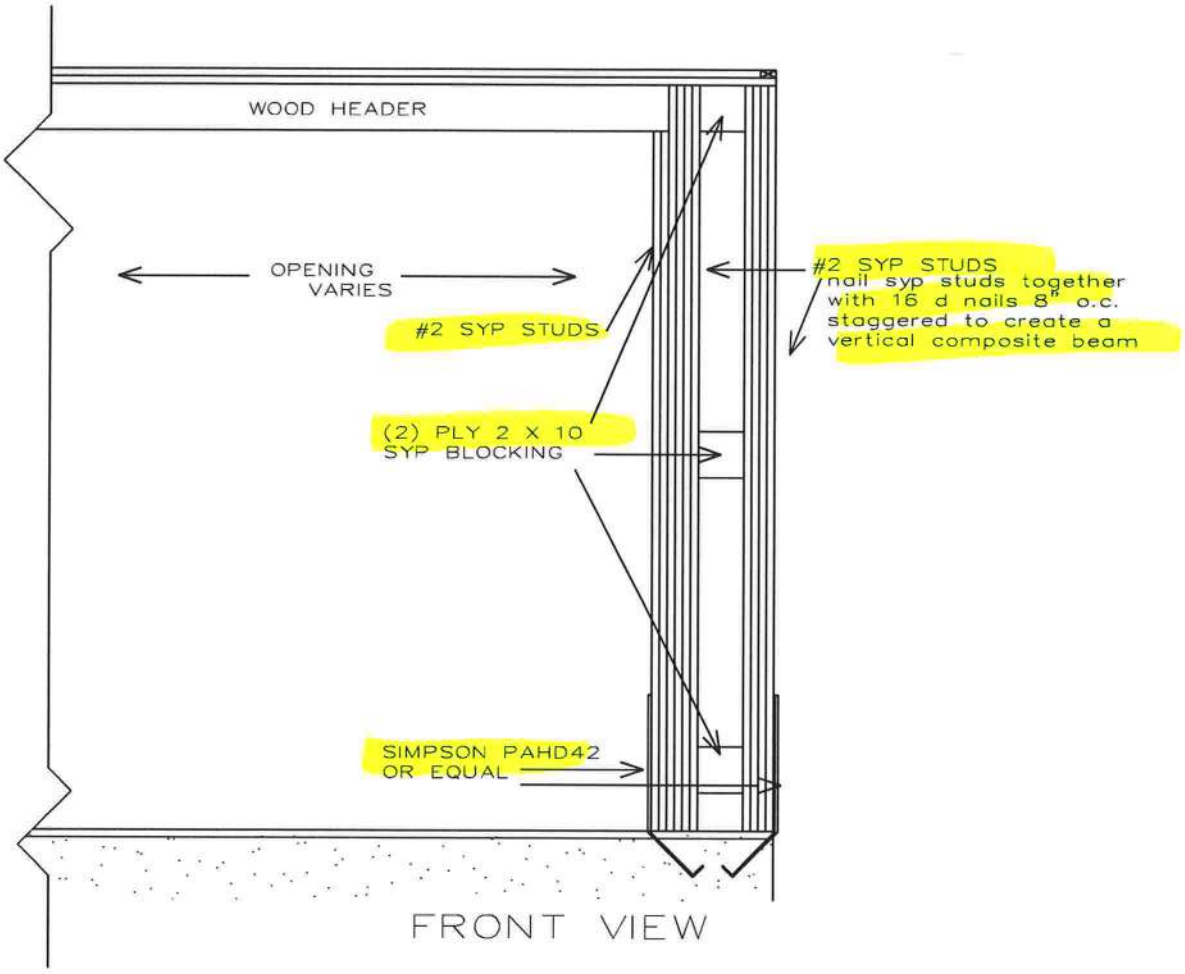

EQUIVALENT 3'-0" SHEAR WALL SEGMENT
24" MINIMUM WALL SECTION

B Schafer 8-29-22

Bruce Schafer, P. E. #48984
7104 NW 42ND LN
GAINESVILLE, FL. 32606

SCHAFER ENGINEERING, LLC
7104 NW 42ND LANE \ GAINESVILLE FL. 32606
PHONE: 386-462-1340

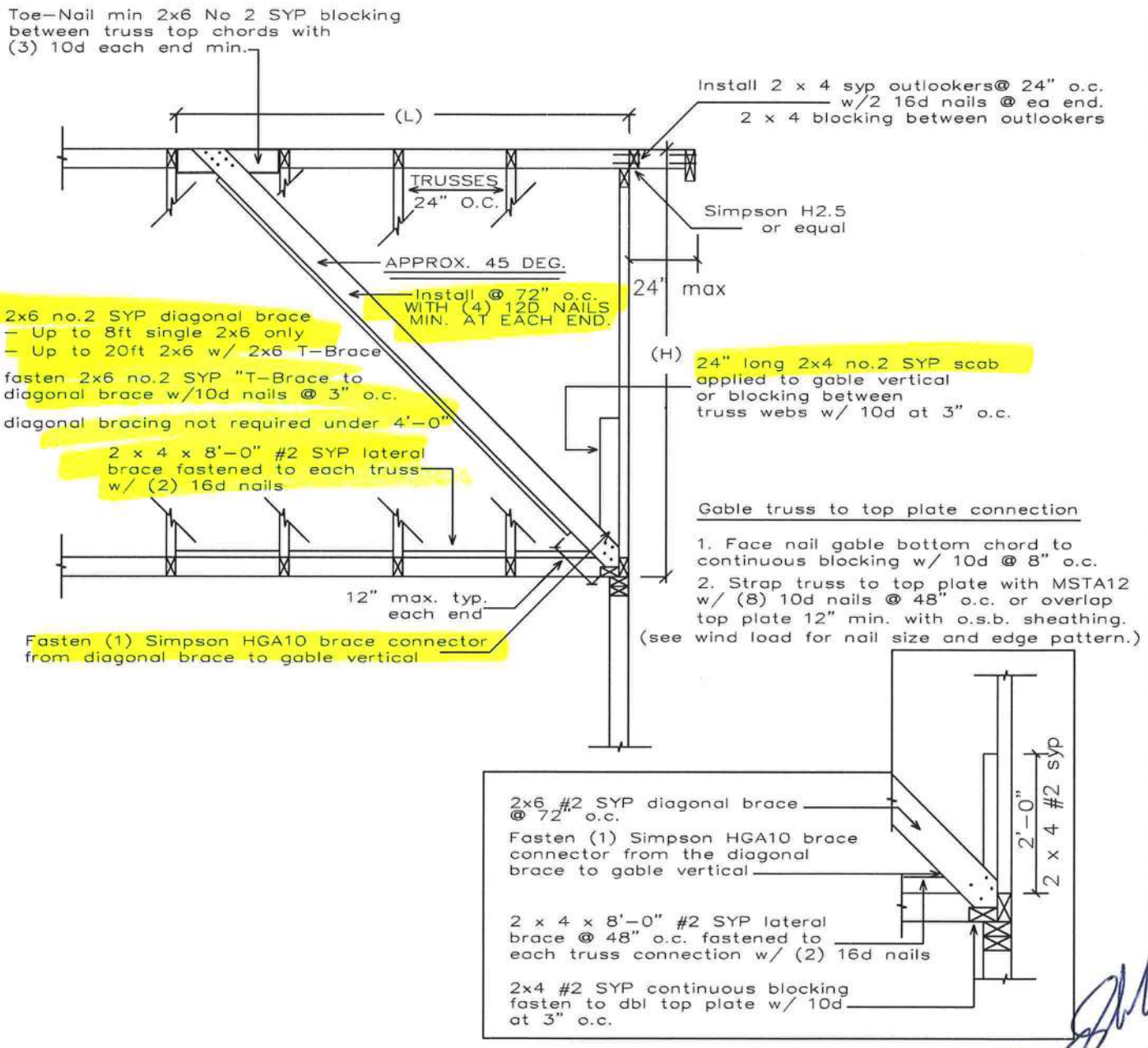

8-29-22

TYPICAL GABLE END BRACING

Bruce Schafer, P. E. #48984
7104 NW 42ND LN
GAINESVILLE, FL. 32606

SCHAFER ENGINEERING, LLC ca 9312
7104 NW 42ND LANE \ GAINESVILLE FL. 32606
PHONE: 386-462-1340

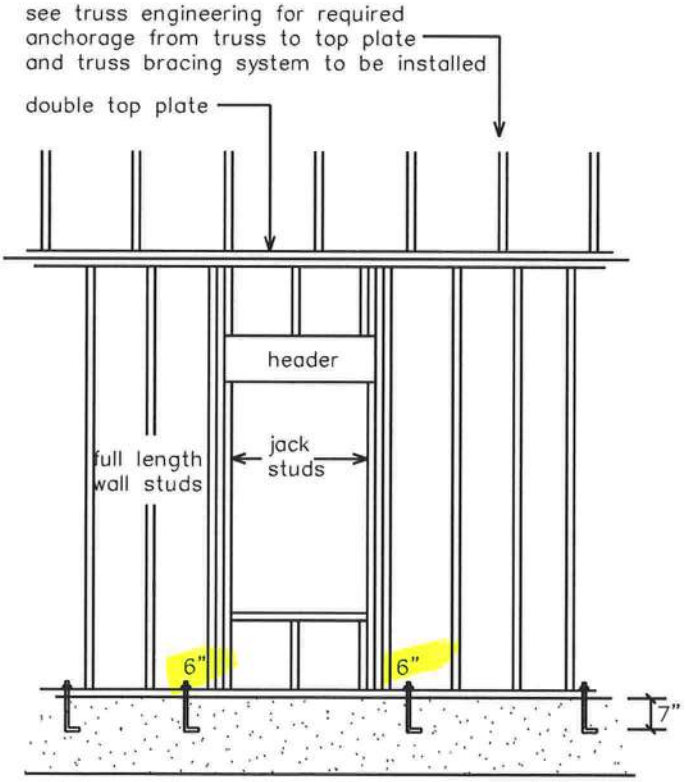

total each truss uplift on the header and divide by two for the top and bottom header anchorages.

SCHAFER ENGINEERING, LLC

7104 NW 42ND LANE \ GAINESVILLE FL. 32606

PHONE: 386-462-1340

TIE-DOWN TABLES

HEADER STRAPPING				
Uplift Lbs	Top Connector	Rating Lbs	Bottom Connector	Rating Lbs
to 455	LSTA9	635	H3	320
to 910	LSTA12	795	2-H3	640
to 1265	LSTA18	1110	LTT19	1305
to 1750	2-LSTA12	1810	LTT20	1750
to 2530	2-LSTA18	2530	HD2A-2.5	2165
to 2865	3-LSTA18	3255	HD2A-3.5	2565
to 3700	3-LSTA24	3880	HD5A-3	3130

Total the uplift for each truss sitting on the header and divide by 2 to determine the uplift on the header. Use proper bolt anchors sufficient to support required uplift loads.

TRUSSES \ GIRDERS			
Uplift Lbs	Top Connector	Bottom Connector	Rating Lbs
to 535	H2.5A	NA	
to 1015	H10A	NA	
to 1215	TS22	LTT19	1305
to 1750	2-TS22	LTT20	1750
to 2570	2-TS22	HD2A	2565
to 3665	3-TS22	HD5A	3645
to 5420	2-MST37	HTT22	5250
to 9660	2-MST60	HD10A	8160

Two 12d common toenials are required per truss for each bearing point into top plate.
It is the contractors responsibility to provide a continuous load path from truss to foundation.

	TOP CONNECTOR	RATING LBS	BOTTOM CONNECTOR	RATING LBS
BEAM SEATS	LSTA18	1110	LTT19	1305
POSTS	2-LSTA18	2220	ABU44	2200

1. Simpson or equivlent hardware may be used. For nailing into spruce members, multiply table values by .86
2. See truss engineering for anchor uplift values.
3. This schedule is not meant to be a replacement to the specified values of any manufactures values.

User Input Data		
Structure Type	Building	
Basic Wind Speed (V)	135	mph
Structural Category	II	
Exposure	B	
Struc Nat Frequency (n1)	1	Hz
Slope of Roof (Theta)	33.7	Deg
Type of Roof	Gabled	
Eave Height (Eht)	10.00	ft
Ridge Height (RHt)	22.00	ft
Mean Roof Height (Ht)	16.00	ft
Width Perp. to Wind (B)	32.00	ft
Width Parallel to Wind (L)	26.00	ft
Damping Ratio (beta)	0.01	

Red values should be changed only through "Main Menu"

Calculated Parameters		
Importance Factor	1	
Non-Hurricane, Hurricane (v=85-100 mph) & Alaska		
Table C6-4 Values		
Alpha =	7.000	
zg =	1200.000	
At =	0.143	
Bt =	0.840	
Am =	0.250	
Bm =	0.450	
Cc =	0.300	
l =	320.00	ft
Epsilon =	0.333	
Zmin =	30.00	ft

Calculated Parameters	
Type of Structure	
Height/Least Horizontal Dim	0.62
Flexible Structure	No

Gust Factor Category I: Rigid Structures - Simplified Method			
Gust1	For rigid structures (Nat Freq > 1 Hz) use 0.85	0.85	
Gust Factor Category II: Rigid Structures - Complete Analysis			
Zm	Zmin	30.00	ft
Izm	Cc * (33/z)^0.167	0.3048	
Lzm	l*(zm/33)^Epsilon	309.99	ft
Q	(1/(1+0.63*((B+Ht)/Lzm)^0.63))^0.5	0.9150	
Gust2	0.925*((1+1.7*Izm*3.4*Q)/(1+1.7*3.4*Izm))	0.8748	
Gust Factor Category III: Flexible or Dynamically Sensitive Structures			
Vhref	V*(5280/3600)	198.00	ft/s
Vzm	bm*(zm/33)^Am*Vhref	87.00	ft/s
NF1	NatFreq*Lzm/Vzm	3.56	Hz
Rn	(7.47*NF1)/(1+10.302*NF1)^1.667	0.0627	
Nh	4.6*NatFreq*Ht/Vzm	0.85	
Nb	4.6*NatFreq*B/Vzm	1.69	
Nd	15.4*NatFreq*Depth/Vzm	4.60	
Rh	1/Nh-(1/(2*Nh^2)*(1-Exp(-2*Nh)))	0.6121	
Rb	1/Nb-(1/(2*Nb^2)*(1-Exp(-2*Nb)))	0.4223	
Rd	1/Nd-(1/(2*Nd^2)*(1-Exp(-2*Nd)))	0.1937	
RR	((1/Beta)*Rn*Rh*Rb*(0.53+0.47*Rd))^0.5	1.0035	
gg	+(2*LN(3600*n1))^0.5+0.577/(2*LN(3600*n1))^0.5	4.19	
Gust3	0.925*((1+1.7*Izm*(3.4^2*Q^2+GG^2*RR^2)^0.5)/(1+1.7*3.4*Izm))	1.24	

Gust Factor Summary			
Main Wind-force resisting system:		**Components and Cladding:**	
Gust Factor Category:	I	Gust Factor Category:	I
Gust Factor (G)	0.87	Gust Factor (G)	0.87

6.5.12.2.1 Design Wind Pressure - Buildings of All Heights (Non-flexible)

Elev.	Kz	Kzt	Kd	qz	Pressure (lb/ft^2)	
					Windward Wall*	
ft			1.00	lb/ft^2	+GCpi	-GCpi
22	0.70	1.00	1.00	32.69	17.96	27.79
20	0.70	1.00	1.00	32.69	17.96	27.79
16	0.70	1.00	1.00	32.69	17.96	27.79
15	0.70	1.00	1.00	32.69	17.96	27.79

Figure 6-3 - External Pressure Coefficients, Cp

Loads on Main Wind-Force Resisting Systems

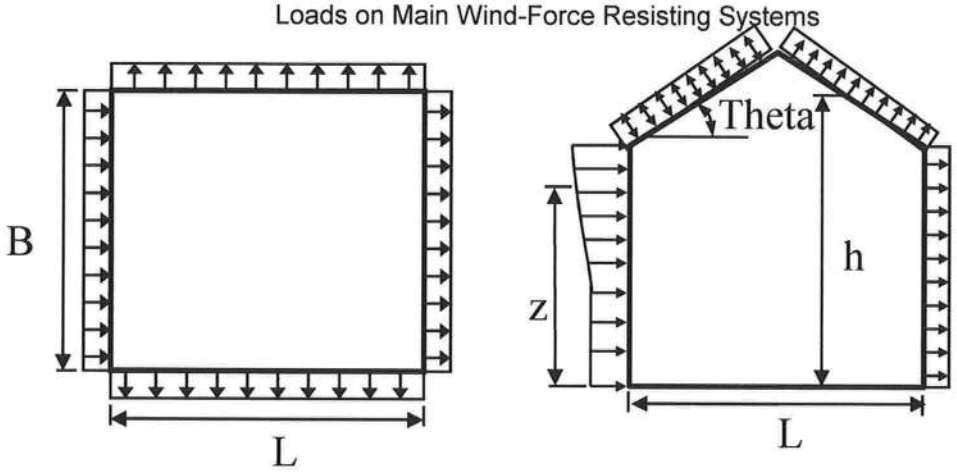

Variable	Formula	Value	Units
Kh	2.01*(Ht/zg)^(2/Alpha)	0.59	
Kht	Topographic factor (Fig 6-2)	1.00	
Qh	.00256*(V)^2*ImpFac*Kh*Kht*Kd	27.31	psf

Wall Pressure Coefficients, Cp	
Surface	**Cp**
Windward Wall (See Figure 6.5.12.2.1 for Pressures)	0.80

Roof Pressure Coefficients, Cp	
Roof Area (sq. ft.)	-
Reduction Factor	1.00

Description	Cp	Pressure (psf)	
		+GCpi	-GCpi
Leeward Walls (Wind Dir Parallel to 32 ft wall)	-0.50	-16.86	-7.03
Leeward Walls (Wind Dir Parallel to 26 ft wall)	-0.45	-15.76	-5.93
Side Walls	-0.70	-21.64	-11.81
Roof - Normal to Ridge (Theta>=10)			
Windward - Max Negative	-0.21	-9.84	-0.01
Windward - Max Positive	0.26	1.22	11.06
Leeward Normal to Ridge	-0.60	-19.25	-9.42
Overhang Top	-0.21	-4.92	-4.92
Overhang Bottom	0.80	0.70	0.70
Roof - Parallel to Ridge (All Theta)			
Dist from Windward Edge: 0 ft to 8 ft	-0.99	-28.63	-18.79
Dist from Windward Edge: 8 ft to 16 ft	-0.85	-25.32	-15.49
Dist from Windward Edge: 16 ft to 32 ft	-0.55	-17.97	-8.13
Dist from Windward Edge: > 32 ft	-0.39	-14.29	-4.46

* Horizontal distance from windward edge

Figure 6-4 - External Pressure Coefficients, GCpf

Loads on Main Wind-Force Resisting Systems w/ Ht <= 60 ft

Kh =	2.01*(Ht/zg)^(2/Alpha)	=	0.59
Kht =	Topographic factor (Fig 6-2)	=	1.00
Qh =	0.00256*(V)^2*ImpFac*Kh*Kht*Kd	=	27.31

Case A						
Surface	**GCpf**	**+GCpi**	**-GCpi**	**qh (psf)**	**Min P (psf)**	**Max P (psf)**
1	0.56	0.18	-0.18	32.69	12.42	24.19
2	0.21	0.18	-0.18	32.69	0.98	12.75
3	-0.43	0.18	-0.18	32.69	-19.94	-8.17
4	-0.37	0.18	-0.18	32.69	-17.98	-6.21
5	0.00	0.18	-0.18	32.69	-5.88	5.88
6	0.00	0.18	-0.18	32.69	-5.88	5.88
1E	0.69	0.18	-0.18	32.69	16.67	28.44
2E	0.27	0.18	-0.18	32.69	2.94	14.71
3E	-0.53	0.18	-0.18	32.69	-23.21	-11.44
4E	-0.48	0.18	-0.18	32.69	-21.57	-9.81
5E	0.00	0.18	-0.18	32.69	-5.88	5.88
6E	0.00	0.18	-0.18	32.69	-5.88	5.88

* p = qh * (GCpf - GCpi)

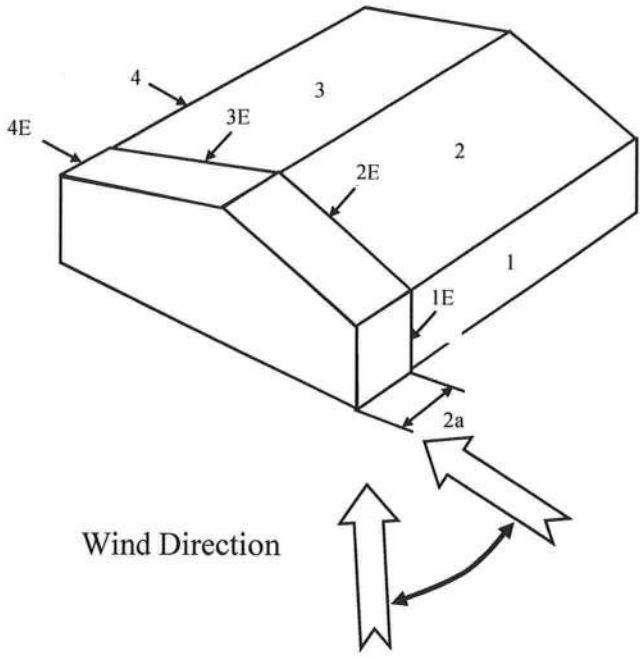

Figure 6-4 - External Pressure Coefficients, GCpf

Loads on Main Wind-Force Resisting Systems w/ Ht <= 60 ft

Kh =	2.01*(Ht/zg)^(2/Alpha)	=	0.59
Kht =	Topographic factor (Fig 6-2)	=	1.00
Qh =	0.00256*(V)^2*ImpFac*Kh*Kht*Kd	=	27.31

Case B						
Surface	GCpf	+GCpi	-GCpi	qh (psf)	Min P (psf)	Max P (psf)
1	-0.45	0.18	-0.18	32.69	-20.59	-8.83
2	-0.69	0.18	-0.18	32.69	-28.44	-16.67
3	-0.37	0.18	-0.18	32.69	-17.98	-6.21
4	-0.45	0.18	-0.18	32.69	-20.59	-8.83
5	0.40	0.18	-0.18	32.69	7.19	18.96
6	-0.29	0.18	-0.18	32.69	-15.36	-3.60
1E	-0.48	0.18	-0.18	32.69	-21.57	-9.81
2E	-1.07	0.18	-0.18	32.69	-40.86	-29.09
3E	-0.53	0.18	-0.18	32.69	-23.21	-11.44
4E	-0.48	0.18	-0.18	32.69	-21.57	-9.81
5E	0.61	0.18	-0.18	32.69	14.06	25.82
6E	-0.43	0.18	-0.18	32.69	-19.94	-8.17

* p = qh * (GCpf - GCpi)

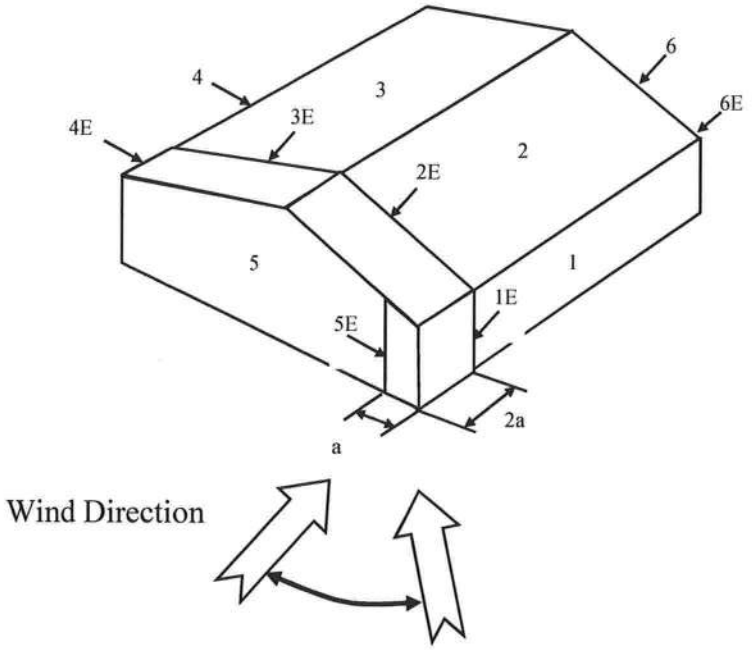

Figure 6-5 - External Pressure Coefficients, GCp

Loads on Components and Cladding for Buildings w/ Ht <= 60 ft

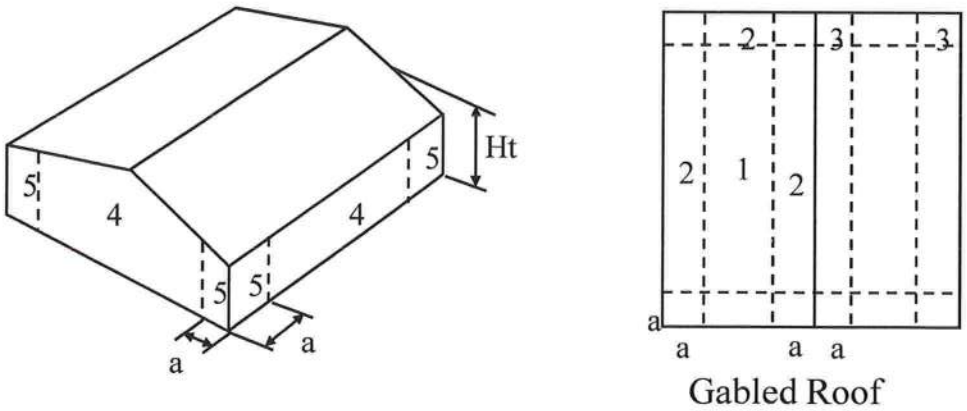

10 < Theta <= 45

a = 2.6 ==> 3.00 ft

Component	Width (ft)	Length (ft)	Area (ft^2)	Zone	GCp		Wind Press (lb/ft^2)	
					Max	Min	Max	Min
	16	7	112.00	5	0.81	-1.03	27.17	-33.03
	0	0	0.00					
	0	0	0.00					
	0	0	0.00					
	0	0	0.00					
	0	0	0.00					
	0	0	0.00					
	0	0	0.00					
	0	0	0.00					
	0	0	0.00					
	0	0	0.00					
	0	0	0.00					
	0	0	0.00					
	0	0	0.00					
	0	0	0.00					
	0	0	0.00					
	0	0	0.00					
	0	0	0.00					
	0	0	0.00					
	0	0	0.00					
	0	0	0.00					
	0	0	0.00					
	0	0	0.00					
	0	0	0.00					

Note: * Enter Zone 1 through 5, or 1H through 3H for overhangs.

Table 6-7 Internal Pressure Coefficients for Buildings, Gcpi

Condition	Gcpi	
	Max +	Max -
Open Buildings	0.00	0.00
Partially Enclosed Buildings	0.55	-0.55
Enclosed Buildings	0.18	-0.18
Enclosed Buildings	**0.18**	**-0.18**