YOONHWAK KIM
LICENSE
No. 86367
STATE OF FLORIDA
PROFESSIONAL ENGINEER

11/03/2020

This document has been electronically signed and sealed using a Digital Signature. Printed copies without an original signature must be verified using the original electronic version.

ALPINE
AN ITW COMPANY

FL REG# 278, Yoonhwak Kim, FL PE #86367

Alpine, an ITW Company
6750 Forum Drive, Suite 305
Orlando, FL 32821
Phone: (800)755-6001
www.alpineitw.com

Site Information:	**Page 1:**
Customer: W. B. Howland Company, Inc.	*Job Number:* 20-4738
Job Description: Patterson	
Address: FL	

Job Engineering Criteria:	
Design Code: FBC 2017 RES	*IntelliVIEW Version:* 20.01.01A *JRef #:* 1X012150003
Wind Standard: ASCE 7-10 *Wind Speed (mph):* 130 *Building Type:* Closed	*Design Loading (psf):* 40.00

This package contains general notes pages, 51 truss drawing(s) and 6 detail(s).

Item	Drawing Number	Truss	Item	Drawing Number	Truss
1	308.20.0831.58533	A01	2	308.20.0831.59607	A02
3	308.20.0832.00683	A03	4	308.20.0832.07973	A04
5	308.20.0832.10683	B01	6	308.20.0832.29717	C01
7	308.20.0832.32940	D02	8	308.20.0832.34877	D03
9	308.20.0832.36087	D04	10	308.20.0832.47590	FT1
11	308.20.0832.49107	G01	12	308.20.0832.50243	G02
13	308.20.0832.53450	G03	14	308.20.0832.55620	H01
15	308.20.0832.57180	H02	16	308.20.0833.03590	HJ1
17	308.20.0833.09000	HJ2	18	308.20.0833.10413	J01
19	308.20.0833.11240	J03	20	308.20.0833.12257	J05
21	308.20.0833.13193	J07	22	308.20.0833.14783	J1A
23	308.20.0833.15813	J1B	24	308.20.0833.16703	J3A
25	308.20.0833.17720	J3B	26	308.20.0833.18967	J5A
27	308.20.0833.20003	J5B	28	308.20.0833.21400	J7A
29	308.20.0833.22710	K01	30	308.20.0833.23890	K02
31	308.20.0833.24787	K03	32	308.20.0833.27467	K04
33	308.20.0833.36467	L01	34	308.20.0833.37780	L02
35	308.20.0833.39900	L03	36	308.20.0833.42487	L04
37	308.20.0833.43773	M01	38	308.20.0833.45133	M02
39	308.20.0833.57447	N01	40	308.20.0833.58950	N02
41	308.20.0834.00227	N03	42	308.20.0834.01503	N04
43	308.20.0834.02900	P01	44	308.20.0834.03800	P02
45	308.20.0834.04780	P03	46	308.20.0834.05700	P04
47	308.20.0834.06703	V1	48	308.20.0834.07600	V2
49	308.20.0834.08567	V3	50	308.20.0834.09373	V4
51	308.20.0834.11083	V5	52	BRCLBSUB0119	

Columbia County Building Department
Plans Reviewed for Code Compliance
State of Florida

YOONHWAK KIM
LICENSE
No. 86367
STATE OF
FLORIDA
PROFESSIONAL ENGINEER

11/03/2020

This document has been electronically signed and sealed using a Digital Signature. Printed copies without an original signature must be verified using the original electronic version.

FL REG# 278, Yoonhwak Kim, FL PE #86367

Alpine, an ITW Company
6750 Forum Drive, Suite 305
Orlando, FL 32821
Phone: (800)755-6001
www.alpineitw.com

Site Information:	**Page 2:**
Customer: W. B. Howland Company, Inc.	*Job Number:* 20-4738
Job Description: Patterson	
Address: FL	

Item	Drawing Number	Truss
53	PB160101014	
55	GBLLETIN0118	
57	VAL160101014	

Item	Drawing Number	Truss
54	A14015ENC101014	
56	A14030ENC101014	

General Notes

Truss Design Engineer Scope of Work, Design Assumptions and Design Responsibilities:
The design responsibilities assumed in the preparation of these design drawings are those specified in ANSI/TPI 1, Chapter 2; and the National Design Standard for Metal Plate Connected Wood Truss Construction, by the Truss Plate Institute. The truss component designs conform to the applicable provisions of ANSI/TPI 1 and NDS, the National Design Specification for Wood Construction by AWC. The truss component designs are based on the specified loading and dimension information furnished by others to the Truss Design Engineer. The Truss Design Engineer has no duty to independently verify the accuracy or completeness of the information provided by others and may rely on that information without liability. The responsibility for verification of that information remains with others neither employed nor controlled by the Truss Design Engineer. The Truss Design Engineer's seal and signature on the attached drawings, or cover page listing these drawings, indicates acceptance of professional engineering responsibility solely for the truss component designs and not for the technical information furnished by others which technical information and consequences thereof remain their sole responsibility.

The suitability and use of these drawings for any particular structure is the responsibility of the Building Designer in accordance with ANSI/TPI 1 Chapter 2. The Building Designer is responsible for determining that the dimensions and loads for each truss component match those required by the plans and by the actual use of the individual component, and for ascertaining that the loads shown on the drawings meet or exceed applicable building code requirements and any additional factors required in the particular application. Truss components using metal connector plates with integral teeth shall not be placed in environments that will cause the moisture content of the wood in which plates are embedded to exceed 19% and/or cause corrosion of connector plates and other metal fasteners.

The Truss Design Engineer shall not be responsible for items beyond the specific scope of the agreed contracted work set forth herein, including but not limited to: verifying the dimensions of the truss component, calculation of any of the truss component design loads, inspection of the truss components before or after installation, the design of temporary or permanent bracing and their attachment required in the roof and/or floor systems, the design of diaphragms or shear walls, the design of load transfer connections to and from diaphragms and shear walls, the design of load transfer to the foundation, the design of connections for truss components to their bearing supports, the design of the bearing supports, installation of the truss components, observation of the truss component installation process, review of truss assembly procedures, sequencing of the truss component installation, construction means and methods, site and/or worker safety in the installation of the truss components and/or its connections.

This document may be a high quality facsimile of the original engineering document which is a digitally signed electronic file with third party authentication. A wet or embossed seal copy of this engineering document is available upon request.

Temporary Lateral Restraint and Bracing:
Temporary lateral restraint and diagonal bracing shall be installed according to the provisions of BCSI chapters B1, B2, B7 and/or B10 (Building Component Safety Information, by TPI and SBCA), or as specified by the Building Designer or other Registered Design Professional. The required locations for lateral restraint and/or bracing depicted on these drawings are only for the permanent lateral support of the truss members to reduce buckling lengths, and do not apply to and may not be relied upon for the temporary stability of the truss components during their installation.

Permanent Lateral Restraint and Bracing:
The required locations for lateral restraint or bracing depicted on these drawings are for the permanent lateral support of the truss members to reduce buckling lengths. Permanent lateral support shall be installed according to the provisions of BCSI chapters B3, B7 and/or B10, or as specified by the Building Designer or other Registered Design Professional. These drawings do not depict or specify installation/erection bracing, wind bracing, portal bracing or similar building stability bracing which are parts of the overall building design to be specified, designed and detailed by the Building Designer.

Connector Plate Information:
Alpine connector plates are made of ASTM A653 or ASTM A1063 galvanized steel with the following designations, gauges and grades: W=Wave, 20ga, grade 40; H=High Strength, 20ga, grade 60; S=Super Strength, 18ga, grade 60. Information on model code compliance is contained in the ICC Evaluation Service report ESR-1118, available on-line at www.icc-es.org.

Fire Retardant Treated Lumber:
Fire retardant treated lumber must be properly re-dried and maintained below 19% or less moisture level through all stages of construction and usage. Fire retardant treated lumber may be more brittle than untreated lumber. Special handling care must be taken to prevent breakage during all handling activities.

General Notes (continued)

Key to Terms:
Information provided on drawings reflects a summary of the pertinent information required for the truss design. Detailed information on load cases, reactions, member lengths, forces and members requiring permanent lateral support may be found in calculation sheets available upon written request.

BCDL = Bottom Chord standard design Dead Load in pounds per square foot.
BCLL = Bottom Chord standard design Live Load in pounds per square foot.
CL = Certified lumber.
Des Ld = total of TCLL, TCDL, BCLL and BCDL Design Load in pounds per square foot.
FRT = Fire Retardant Treated lumber.
FRT-DB = D-Blaze Fire Retardant Treated lumber.
FRT-DC = Dricon Fire Retardant Treated lumber.
FRT-FP = FirePRO Fire Retardant Treated lumber.
FRT-FL = FlamePRO Fire Retardant Treated lumber.
FRT-FT = FlameTech Fire Retardant Treated lumber.
FRT-PG = PYRO-GUARD Fire Retardant Treated lumber.
g = green lumber.
HORZ(LL) = maximum Horizontal panel point deflection due to Live Load, in inches.
HORZ(TL) = maximum Horizontal panel point long term deflection in inches, due to Total Load, including creep adjustment.
HPL = additional Horizontal Load added to a truss Piece in pounds per linear foot or pounds.
Ic = Incised lumber.
FJ = Finger Jointed lumber.
L/# = user specified divisor for limiting span/deflection ratio for evaluation of actual L/defl value.
L/defl = ratio of Length between bearings, in inches, divided by the vertical Deflection due to creep, in inches, at the referenced panel point. Reported as 999 if greater than or equal to 999.
Loc = Location, starting location of left end of bearing or panel point (joint) location of deflection.
Max BC CSI = Maximum bending and axial Combined Stress Index for Bottom Chords for of all load cases.
Max TC CSI = Maximum bending and axial Combined Stress Index for Top Chords for of all load cases.
Max Web CSI= Maximum bending and axial Combined Stress Index for Webs for of all load cases.
NCBCLL = Non-Concurrent Bottom Chord design Live Load in pounds per square foot.
PL = additional Load applied at a user specified angle on a truss Piece in pounds per linear foot or pounds.
PLB = additional vertical load added to a Bottom chord Piece of a truss in pounds per linear foot or pounds
PLT = additional vertical load added to a Top chord Piece of a truss in pounds per linear foot or pounds.
PP = Panel Point.
R = maximum downward design Reaction, in pounds, from all specified gravity load cases, at the indicated location (Loc).
-R = maximum upward design Reaction, in pounds, from all specified gravity load cases, at the identified location (Loc).
Rh = maximum horizontal design Reaction in either direction, in pounds, from all specified gravity load cases, at the indicated location (Loc).
RL = maximum horizontal design Reaction in either direction, in pounds, from all specified non-gravity (wind or seismic) load cases, at the indicated location (Loc).
Rw = maximum downward design Reaction, in pounds, from all specified non-gravity (wind or seismic) load cases, at the identified location (Loc).
TCDL = Top Chord standard design Dead Load in pounds per square foot.
TCLL = Top Chord standard design Live Load in pounds per square foot.
U = maximum Upward design reaction, in pounds, from all specified non-gravity (wind or seismic) load cases, at the indicated location (Loc).
VERT(CL) = maximum Vertical panel point deflection in inches due to Live Load and Creep Component of Dead Load in inches.
VERT(CTL) = maximum Vertical panel point deflection ratios due to Live Load and Creep Component of Dead Load, and maximum long term Vertical panel point deflection in inches due to Total load, including creep adjustment.
VERT(LL) = maximum Vertical panel point deflection in inches due to Live Load.
VERT(TL) = maximum Vertical panel point long term deflection in inches due to Total load, including creep adjustment.
W = Width of non-hanger bearing, in inches.

Refer to ASCE-7 for Wind and Seismic abbreviations.
Uppercase Acronyms not explained above are as defined in TPI 1.

References:

1. AWC: American Wood Council; 222 Catoctin Circle SE, Suite 201; Leesburg, VA 20175; www.awc.org.
2. ICC: International Code Council; www.iccsafe.org.
3. Alpine, a division of ITW Building Components Group Inc.: 514 Earth City Expressway, Suite 242, Earth City, MO 63045; www.alpineitw.com.
4. TPI: Truss Plate Institute, 2670 Crain Highway, Suite 203, Waldorf, MD 20601; www.tpinst.org.
5. SBCA: Wood Truss Council of America, 6300 Enterprise Lane, Madison, WI 53719; www.sbcindustry.com.

SEQN: 384388 COMN FROM: CDM	Ply: 1 Qty: 2	**Job Number:** 20-4738 Patterson **Truss Label:** A01	Cust: R 215 JRef:1X012150003 T44 DrwNo: 308.20.0831.58533 / YK 11/03/2020

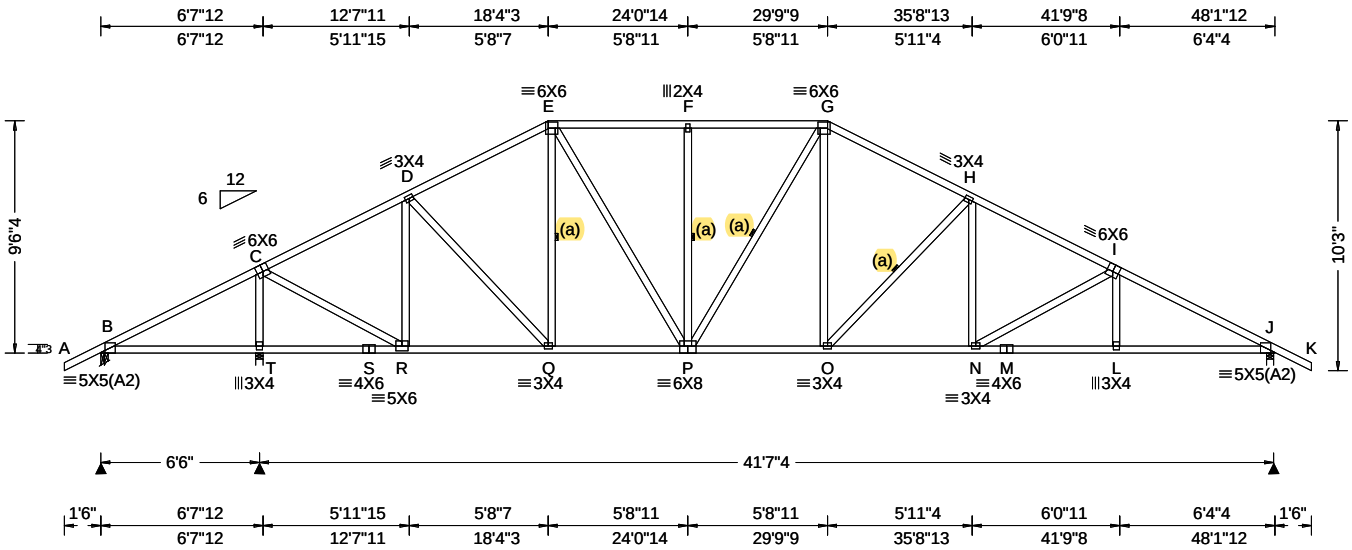

Loading Criteria (psf)

TCLL:	20.00
TCDL:	10.00
BCLL:	0.00
BCDL:	10.00
Des Ld:	40.00
NCBCLL:	10.00
Soffit:	2.00

Load Duration: 1.25
Spacing: 24.0 "

Wind Criteria
Wind Std: ASCE 7-10
Speed: 130 mph
Enclosure: Closed
Risk Category: II
EXP: C Kzt: NA
Mean Height: 15.00 ft
TCDL: 5.0 psf
BCDL: 5.0 psf
MWFRS Parallel Dist: 0 to h/2
C&C Dist a: 4.81 ft
Loc. from endwall: Any
GCpi: 0.18
Wind Duration: 1.60

Snow Criteria (Pg,Pf in PSF)
Pg: NA Ct: NA CAT: NA
Pf: NA Ce: NA
Lu: NA Cs: NA
Snow Duration: NA

Building Code:
FBC 2017 RES
TPI Std: 2014
Rep Fac: Yes
FT/RT:20(0)/10(0)
Plate Type(s):
WAVE

Defl/CSI Criteria

PP Deflection in	loc	L/defl	L/#
VERT(LL): 0.194	N	999	240
VERT(CL): 0.359	N	999	180
HORZ(LL): 0.064	L	-	-
HORZ(TL): 0.119	L	-	-

Creep Factor: 2.0
Max TC CSI: 0.802
Max BC CSI: 0.844
Max Web CSI: 0.875

VIEW Ver: 20.01.01A.0724.11

▲Maximum Reactions (lbs)

Loc	Gravity R+	/ R-	/ Rh	Non-Gravity / Rw	/ U	/ RL
B	148	/-275	/-	/55	/60	/295
T	2711	/-	/-	/1427	/411	/-
J	1929	/-	/-	/1113	/318	/-

Wind reactions based on MWFRS
B Brg Width = 3.5 Min Req = 1.5
T Brg Width = 3.5 Min Req = 2.8
J Brg Width = 3.5 Min Req = 2.3
Bearings B, T, & J are a rigid surface.
Members not listed have forces less than 375#

Maximum Top Chord Forces Per Ply (lbs)

Chords	Tens.	Comp.	Chords	Tens.	Comp.
B - C	953	- 251	F - G	964	- 2047
C - D	651	- 1492	G - H	1057	- 2437
D - E	871	- 1929	H - I	1206	- 3034
E - F	964	- 2047	I - J	1314	- 3542

Maximum Bot Chord Forces Per Ply (lbs)

Chords	Tens.	Comp.	Chords	Tens.	Comp.
B - T	344	- 810	P - O	2103	- 522
T - S	321	- 751	O - N	2625	- 820
S - R	321	- 751	N - M	3091	- 1052
R - Q	1288	- 323	M - L	3091	- 1052
Q - P	1652	- 339	L - J	3094	- 1052

Maximum Web Forces Per Ply (lbs)

Webs	Tens.	Comp.	Webs	Tens.	Comp.
T - C	956	- 2543	G - O	791	- 302
C - R	2298	- 713	O - H	438	- 765
R - D	385	- 982	H - N	452	- 138
D - Q	544	- 74	N - I	317	- 522
E - P	753	- 298			

Lumber
Top chord: 2x4 SP #2;
Bot chord: 2x4 SP #2;
Webs: 2x4 SP #3;

Bracing
(a) Continuous lateral restraint equally spaced on member.

Loading
Truss passed check for 20 psf additional bottom chord live load in areas with 42"-high x 24"-wide clearance.

Purlins
In lieu of structural panels or rigid ceiling use purlins to brace all flat TC @ 24" oc, all BC @ 24" oc.

Wind
Wind loads based on MWFRS with additional C&C member design.

Additional Notes
Negative reaction(s) of -275# MAX. from a non-wind load case requires uplift connection. See Maximum Reactions.

WARNING: Furnish a copy of this DWG to the installation contractor. Special care must be taken during handling, shipping and installation of trusses. See "WARNING" note below.

Refer to DWG PB160101014 for piggyback details.

The overall height of this truss excluding overhang is 9-6-4.

YOONHWAK KIM LICENSE No. 86367 STATE OF FLORIDA PROFESSIONAL ENGINEER

FL REG# 278, Yoonhwak Kim, FL PE #86367
11/03/2020

****WARNING**** READ AND FOLLOW ALL NOTES ON THIS DRAWING!
****IMPORTANT**** FURNISH THIS DRAWING TO ALL CONTRACTORS INCLUDING THE INSTALLERS

Trusses require extreme care in fabricating, handling, shipping, installing and bracing. Refer to and follow the latest edition of BCSI (Building Component Safety Information, by TPI and SBCA) for safety practices prior to performing these functions. Installers shall provide temporary bracing per BCSI. Unless noted otherwise, top chord shall have properly attached structural sheathing and bottom chord shall have a properly attached rigid ceiling. Locations shown for permanent lateral restraint of webs shall have bracing installed per BCSI sections B3, B7, or B10, as applicable. Apply plates to each face of truss and position as shown above and on the Joint Details, unless noted otherwise. Refer to drawings 160A-Z for standard plate positions. Refer to job's General Notes page for additional information.

Alpine, a division of ITW Building Components Group Inc. shall not be responsible for any deviation from this drawing, any failure to build the truss in conformance with ANSI/TPI 1, or for handling, shipping, installation and bracing of trusses. A seal on this drawing or cover page listing this drawing, indicates acceptance of professional engineering responsibility solely for the design shown. The suitability and use of this drawing for any structure is the responsibility of the Building Designer per ANSI/TPI 1 Sec.2.

For more information see these web sites: Alpine: alpineitw.com; TPI: tpinst.org; SBCA: sbcindustry.com; ICC: iccsafe.org; AWC: awc.org

ALPINE AN ITW COMPANY
6750 Forum Drive
Suite 305
Orlando FL, 32821

SEQN: 384389 COMN FROM: CDM	Ply: 1 Qty: 1	**Job Number:** 20-4738 Patterson **Truss Label:** A02	Cust: R 215 JRef:1X012150003 T4 DrwNo: 308.20.0831.59607 / YK 11/03/2020

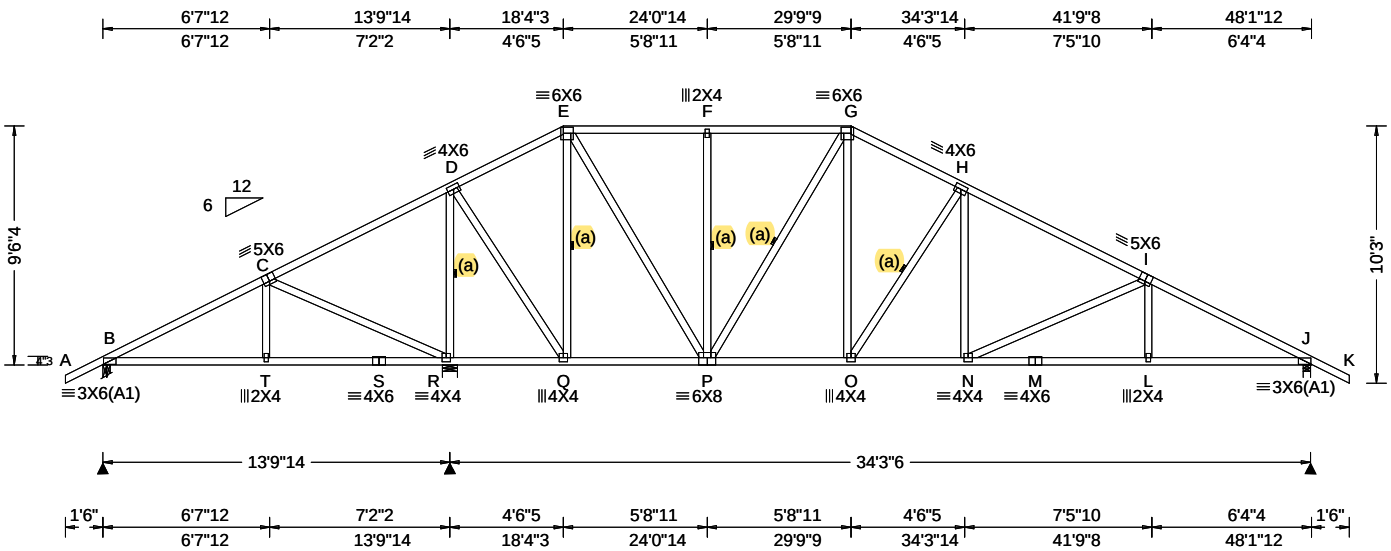

Loading Criteria (psf)

TCLL:	20.00
TCDL:	10.00
BCLL:	0.00
BCDL:	10.00
Des Ld:	40.00
NCBCLL:	10.00
Soffit:	2.00

Load Duration: 1.25
Spacing: 24.0 "

Wind Criteria
Wind Std: ASCE 7-10
Speed: 130 mph
Enclosure: Closed
Risk Category: II
EXP: C Kzt: NA
Mean Height: 15.00 ft
TCDL: 5.0 psf
BCDL: 5.0 psf
MWFRS Parallel Dist: h/2 to h
C&C Dist a: 4.81 ft
Loc. from endwall: not in 13.00 ft
GCpi: 0.18
Wind Duration: 1.60

Snow Criteria (Pg,Pf in PSF)
Pg: NA Ct: NA CAT: NA
Pf: NA Ce: NA
Lu: NA Cs: NA
Snow Duration: NA

Building Code:
FBC 2017 RES
TPI Std: 2014
Rep Fac: Yes
FT/RT:20(0)/10(0)
Plate Type(s):
WAVE

Defl/CSI Criteria

PP Deflection in	loc	L/defl	L/#
VERT(LL): 0.106	N	999	240
VERT(CL): 0.218	N	999	180
HORZ(LL): 0.032	L	-	-
HORZ(TL): 0.065	L	-	-

Creep Factor: 2.0
Max TC CSI: 0.805
Max BC CSI: 0.740
Max Web CSI: 0.862

VIEW Ver: 20.01.01A.0724.11

▲Maximum Reactions (lbs)

Loc	Gravity R+	/ R-	/ Rh	Non-Gravity / Rw	/ U	/ RL
B	457	/-	/-	/260	/70	/295
R	2416	/-	/-	/1397	/423	/-
J	1416	/-	/-	/936	/253	/-

Wind reactions based on MWFRS
B Brg Width = 3.5 Min Req = 1.5
R Brg Width = 7.3 Min Req = 2.9
J Brg Width = 3.5 Min Req = 1.7
Bearings B, R, & J are a rigid surface.
Members not listed have forces less than 375#

Maximum Top Chord Forces Per Ply (lbs)

Chords	Tens.	Comp.	Chords	Tens.	Comp.
C - D	768	- 92	G - H	475	- 1321
D - E	248	- 385	H - I	507	- 1794
E - F	390	- 860	I - J	577	- 2448
F - G	390	- 860			

Maximum Bot Chord Forces Per Ply (lbs)

Chords	Tens.	Comp.	Chords	Tens.	Comp.
R - Q	262	- 534	N - M	2120	- 433
P - O	1114	- 128	M - L	2120	- 433
O - N	1498	- 260	L - J	2123	- 432

Maximum Web Forces Per Ply (lbs)

Webs	Tens.	Comp.	Webs	Tens.	Comp.
C - R	205	- 702	P - G	132	- 504
R - D	511	- 1993	G - O	697	- 194
D - Q	1410	- 301	O - H	247	- 715
E - Q	270	- 1099	H - N	463	- 65
E - P	1113	- 300	N - I	201	- 673
F - P	163	- 395			

Lumber
Top chord: 2x4 SP #2;
Bot chord: 2x4 SP #2;
Webs: 2x4 SP #3;

Bracing
(a) Continuous lateral restraint equally spaced on member.

Purlins
In lieu of structural panels or rigid ceiling use purlins to brace all flat TC @ 24" oc, all BC @ 24" oc.

Wind
Wind loads based on MWFRS with additional C&C member design.

Additional Notes
WARNING: Furnish a copy of this DWG to the installation contractor. Special care must be taken during handling, shipping and installation of trusses. See "WARNING" note below.

Refer to DWG PB160101014 for piggyback details.

The overall height of this truss excluding overhang is 9-6-4.

YOONHWAK KIM LICENSE No. 86367 STATE OF FLORIDA PROFESSIONAL ENGINEER

FL REG# 278, Yoonhwak Kim, FL PE #86367
11/03/2020

****WARNING**** READ AND FOLLOW ALL NOTES ON THIS DRAWING!
****IMPORTANT**** FURNISH THIS DRAWING TO ALL CONTRACTORS INCLUDING THE INSTALLERS

Trusses require extreme care in fabricating, handling, shipping, installing and bracing. Refer to and follow the latest edition of BCSI (Building Component Safety Information, by TPI and SBCA) for safety practices prior to performing these functions. Installers shall provide temporary bracing per BCSI. Unless noted otherwise, top chord shall have properly attached structural sheathing and bottom chord shall have a properly attached rigid ceiling. Locations shown for permanent lateral restraint of webs shall have bracing installed per BCSI sections B3, B7, or B10, as applicable. Apply plates to each face of truss and position as shown above and on the Joint Details, unless noted otherwise. Refer to drawings 160A-Z for standard plate positions. Refer to job's General Notes page for additional information.

Alpine, a division of ITW Building Components Group Inc. shall not be responsible for any deviation from this drawing, any failure to build the truss in conformance with ANSI/TPI 1, or for handling, shipping, installation and bracing of trusses. A seal on this drawing or cover page listing this drawing, indicates acceptance of professional engineering responsibility solely for the design shown. The suitability and use of this drawing for any structure is the responsibility of the Building Designer per ANSI/TPI 1 Sec.2.

For more information see these web sites: Alpine: alpineitw.com; TPI: tpinst.org; SBCA: sbcindustry.com; ICC: iccsafe.org; AWC: awc.org

ALPINE AN ITW COMPANY
6750 Forum Drive
Suite 305
Orlando FL, 32821

SEQN: 384390 COMN FROM: CDM	Ply: 1 Qty: 4	**Job Number:** 20-4738 Patterson **Truss Label:** A03	Cust: R 215 JRef:1X012150003 T45 DrwNo: 308.20.0832.00683 / YK 11/03/2020

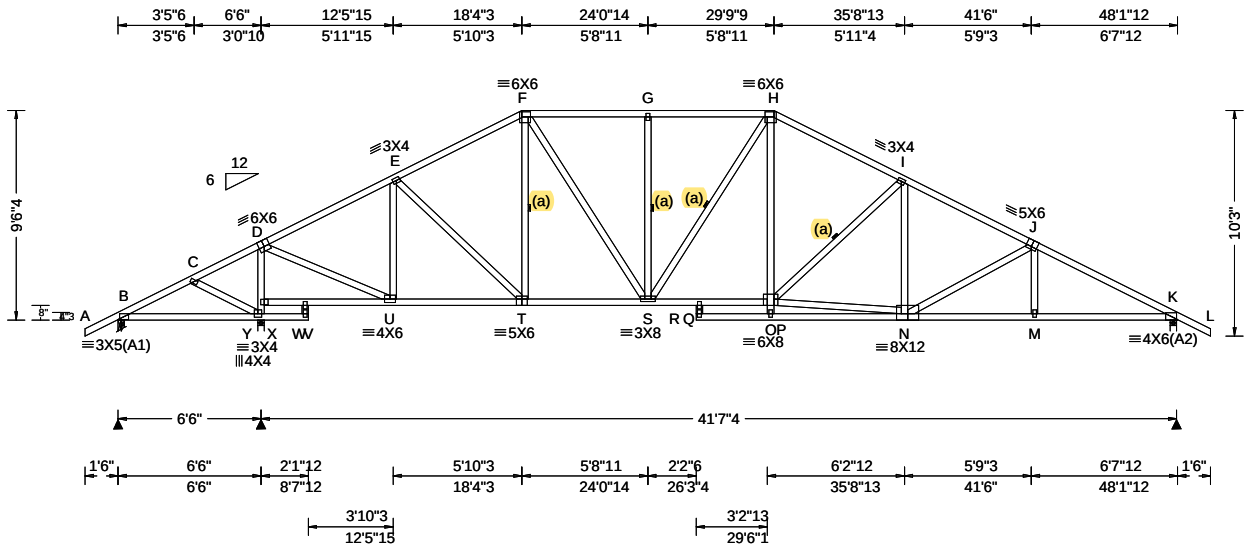

Loading Criteria (psf)

TCLL: 20.00
TCDL: 10.00
BCLL: 0.00
BCDL: 10.00
Des Ld: 40.00
NCBCLL: 10.00
Soffit: 2.00
Load Duration: 1.25
Spacing: 24.0 "

Wind Criteria

Wind Std: ASCE 7-10
Speed: 130 mph
Enclosure: Closed
Risk Category: II
EXP: C Kzt: NA
Mean Height: 15.00 ft
TCDL: 5.0 psf
BCDL: 5.0 psf
MWFRS Parallel Dist: 0 to h/2
C&C Dist a: 4.81 ft
Loc. from endwall: Any
GCpi: 0.18
Wind Duration: 1.60

Snow Criteria (Pg,Pf in PSF)

Pg: NA Ct: NA CAT: NA
Pf: NA Ce: NA
Lu: NA Cs: NA
Snow Duration: NA

Building Code:
FBC 2017 RES
TPI Std: 2014
Rep Fac: Yes
FT/RT:20(0)/10(0)
Plate Type(s):
WAVE

Defl/CSI Criteria

PP Deflection in	loc	L/defl	L/#
VERT(LL): 0.189	P	999	240
VERT(CL): 0.365	P	999	180
HORZ(LL): 0.060	M	-	-
HORZ(TL): 0.116	M	-	-

Creep Factor: 2.0
Max TC CSI: 0.710
Max BC CSI: 0.790
Max Web CSI: 0.971

VIEW Ver: 20.01.01A.0724.11

▲ Maximum Reactions (lbs)

Loc	Gravity R+	Gravity / R-	Gravity / Rh	Non-Gravity / Rw	Non-Gravity / U	Non-Gravity / RL
B	234	/-60	/-	/100	/73	/295
Y	2381	/-	/-	/1406	/363	/-
K	1886	/-	/-	/1138	/325	/-

Wind reactions based on MWFRS
B Brg Width = 3.5 Min Req = 1.5
Y Brg Width = 3.5 Min Req = 2.4
K Brg Width = 3.5 Min Req = 2.2
Bearings B, Y, & K are a rigid surface.
Members not listed have forces less than 375#

Maximum Top Chord Forces Per Ply (lbs)

Chords	Tens.	Comp.	Chords	Tens.	Comp.
B - C	422	- 193	G - H	1044	- 2190
C - D	525	- 199	H - I	1142	- 2580
D - E	805	- 1790	I - J	1240	- 2927
E - F	964	- 2103	J - K	1350	- 3451
F - G	1044	- 2190			

Maximum Bot Chord Forces Per Ply (lbs)

Chords	Tens.	Comp.	Chords	Tens.	Comp.
U - T	1560	- 464	Q - O	2175	- 577
T - S	1804	- 421	N - M	3010	- 1084
S - Q	2250	- 604	M - K	3012	- 1083

Maximum Web Forces Per Ply (lbs)

Webs	Tens.	Comp.	Webs	Tens.	Comp.
Y - X	814	- 2156	O - H	854	- 336
X - D	809	- 2136	O - I	348	- 424
D - U	2028	- 672	O - N	2440	- 816
U - E	311	- 765	N - J	317	- 535
F - S	694	- 283			

Lumber

Top chord: 2x4 SP #2;
Bot chord: 2x4 SP #2;
Webs: 2x4 SP #3;

Bracing

(a) Continuous lateral restraint equally spaced on member.

Plating Notes

All plates are 2X4 except as noted.

Loading

Truss passed check for 20 psf additional bottom chord live load in areas with 42"-high x 24"-wide clearance.

Wind

Wind loads based on MWFRS with additional C&C member design.

Additional Notes

WARNING: Furnish a copy of this DWG to the installation contractor. Special care must be taken during handling, shipping and installation of trusses. See "WARNING" note below.

Refer to DWG PB160101014 for piggyback details.

The overall height of this truss excluding overhang is 9-6-4.

Laterally brace top chord below filler and bottom chord above filler at 24" o.c., including a lateral brace at chord ends (If no rigid diaphragm exists at that point).

YOONHWAK KIM
LICENSE
No. 86367
STATE OF FLORIDA
PROFESSIONAL ENGINEER

FL REG# 278, Yoonhwak Kim, FL PE #86367
11/03/2020

****WARNING**** READ AND FOLLOW ALL NOTES ON THIS DRAWING!
****IMPORTANT**** FURNISH THIS DRAWING TO ALL CONTRACTORS INCLUDING THE INSTALLERS

Trusses require extreme care in fabricating, handling, shipping, installing and bracing. Refer to and follow the latest edition of BCSI (Building Component Safety Information, by TPI and SBCA) for safety practices prior to performing these functions. Installers shall provide temporary bracing per BCSI. Unless noted otherwise, top chord shall have properly attached structural sheathing and bottom chord shall have a properly attached rigid ceiling. Locations shown for permanent lateral restraint of webs shall have bracing installed per BCSI sections B3, B7, or B10, as applicable. Apply plates to each face of truss and position as shown above and on the Joint Details, unless noted otherwise. Refer to drawings 160A-Z for standard plate positions. Refer to job's General Notes page for additional information.

Alpine, a division of ITW Building Components Group Inc. shall not be responsible for any deviation from this drawing, any failure to build the truss in conformance with ANSI/TPI 1, or for handling, shipping, installation and bracing of trusses. A seal on this drawing or cover page listing this drawing, indicates acceptance of professional engineering responsibility solely for the design shown. The suitability and use of this drawing for any structure is the responsibility of the Building Designer per ANSI/TPI 1 Sec.2.

For more information see these web sites: Alpine: alpineitw.com; TPI: tpinst.org; SBCA: sbcindustry.com; ICC: iccsafe.org; AWC: awc.org

ALPINE AN ITW COMPANY
6750 Forum Drive
Suite 305
Orlando FL, 32821

SEQN: 384398 GABL	Ply: 1	**Job Number:** 20-4738	Cust: R 215 JRef:1X012150003 T3
FROM: CDM	Qty: 1	Patterson	DrwNo: 308.20.0832.07973
Page 1 of 2		**Truss Label:** A04	/ YK 11/03/2020

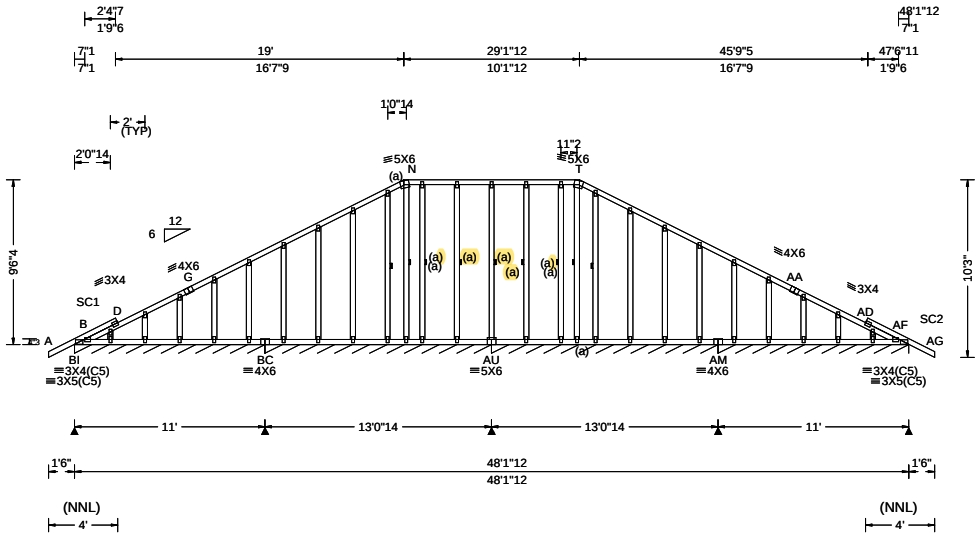

Loading Criteria (psf)	**Wind Criteria**	**Snow Criteria** (Pg,Pf in PSF)	**Defl/CSI Criteria**
TCLL: 20.00	Wind Std: ASCE 7-10	Pg: NA Ct: NA CAT: NA	PP Deflection in loc L/defl L/#
TCDL: 10.00	Speed: 130 mph	Pf: NA Ce: NA	VERT(LL): 0.002 R 999 240
BCLL: 0.00	Enclosure: Closed	Lu: NA Cs: NA	VERT(CL): 0.005 R 999 180
BCDL: 10.00	Risk Category: II	Snow Duration: NA	HORZ(LL): 0.010 Y - -
Des Ld: 40.00	EXP: C Kzt: NA		HORZ(TL): 0.013 Y - -
NCBCLL: 10.00	Mean Height: 15.00 ft	Building Code:	Creep Factor: 2.0
Soffit: 2.00	TCDL: 5.0 psf	FBC 2017 RES	Max TC CSI: 0.412
Load Duration: 1.25	BCDL: 5.0 psf	TPI Std: 2014	Max BC CSI: 0.059
Spacing: 24.0 "	MWFRS Parallel Dist: 0 to h/2	Rep Fac: No	Max Web CSI: 0.153
	C&C Dist a: 4.81 ft	FT/RT:20(0)/10(0)	
	Loc. from endwall: Any	Plate Type(s):	
	GCpi: 0.18	WAVE	VIEW Ver: 20.01.01A.0724.11
	Wind Duration: 1.60		

▲ Maximum Reactions (lbs), or *=PLF

Loc	Gravity R+	/ R-	/ Rh	Non-Gravity / Rw	/ U	/ RL
BI*	140	/-	/-	/71	/1	/33
BC*	164	/-	/-	/64	/-	/-
AU*	141	/-	/-	/61	/21	/-
AM*	140	/-	/-	/85	/27	/-

Wind reactions based on MWFRS

BI	Brg Width = 132	Min Req = -
BC	Brg Width = 156	Min Req = -
AU	Brg Width = 156	Min Req = -
AM	Brg Width = 132	Min Req = -

Bearings BI, BC, AU, & AM are a rigid surface.

Members not listed have forces less than 375#

Maximum Top Chord Forces Per Ply (lbs)

Chords	Tens.	Comp.	Chords	Tens.	Comp.
D - G	387	- 87	G - N	393	- 84

Maximum Bot Chord Forces Per Ply (lbs)

Chords	Tens.	Comp.	Chords	Tens.	Comp.
BC-AU	488	- 108	AM-AF	481	- 104
AU-AM	486	- 108			

Lumber

Top chord: 2x4 SP #2;
Bot chord: 2x4 SP #2;
Webs: 2x4 SP #3;
Stack Chord: SC1 2x4 SP #2;
Stack Chord: SC2 2x4 SP #2;

Bracing

(a) Continuous lateral restraint equally spaced on member.

Plating Notes

All plates are 2X4 except as noted.

Loading

Truss designed to support 1-6-0 top chord outlookers and cladding load not to exceed 5.00 PSF one face and 24.0" span opposite face. Top chord must not be cut or notched, unless specified otherwise.

Purlins

In lieu of structural panels use purlins to brace all flat TC @ 24" oc.

Wind

Wind loads based on MWFRS with additional C&C member design.

YOONHWAK KIM
LICENSE
No. 86367
STATE OF
FLORIDA
PROFESSIONAL ENGINEER

FL REG# 278, Yoonhwak Kim, FL PE #86367
11/03/2020

****WARNING**** READ AND FOLLOW ALL NOTES ON THIS DRAWING!
****IMPORTANT**** FURNISH THIS DRAWING TO ALL CONTRACTORS INCLUDING THE INSTALLERS

Trusses require extreme care in fabricating, handling, shipping, installing and bracing. Refer to and follow the latest edition of BCSI (Building Component Safety Information, by TPI and SBCA) for safety practices prior to performing these functions. Installers shall provide temporary bracing per BCSI. Unless noted otherwise, top chord shall have properly attached structural sheathing and bottom chord shall have a properly attached rigid ceiling. Locations shown for permanent lateral restraint of webs shall have bracing installed per BCSI sections B3, B7, or B10, as applicable. Apply plates to each face of truss and position as shown above and on the Joint Details, unless noted otherwise. Refer to drawings 160A-Z for standard plate positions. Refer to job's General Notes page for additional information.

Alpine, a division of ITW Building Components Group Inc. shall not be responsible for any deviation from this drawing, any failure to build the truss in conformance with ANSI/TPI 1, or for handling, shipping, installation and bracing of trusses. A seal on this drawing or cover page listing this drawing, indicates acceptance of professional engineering responsibility solely for the design shown. The suitability and use of this drawing for any structure is the responsibility of the Building Designer per ANSI/TPI 1 Sec.2.

For more information see these web sites: Alpine: alpineitw.com; TPI: tpinst.org; SBCA: sbcindustry.com; ICC: iccsafe.org; AWC: awc.org

ALPINE AN ITW COMPANY
6750 Forum Drive
Suite 305
Orlando FL, 32821

Additional Notes

See DWGS A14015ENC101014 & GBLLETIN0118 for gable wind bracing and other requirements.

Stacked top chord must NOT be notched or cut in area (NNL). Dropped top chord braced at 24" oc intervals. Attach stacked top chord (SC) to dropped top chord in notchable area using 3x4 tie-plates 24" oc. Center plate on stacked/dropped chord interface, plate length perpendicular to chord length. Splice top chord in notchable area using 3x6.

WARNING: Furnish a copy of this DWG to the installation contractor. Special care must be taken during handling, shipping and installation of trusses. See "WARNING" note below.

Refer to DWG PB160101014 for piggyback details.

The overall height of this truss excluding overhang is 9-6-4.

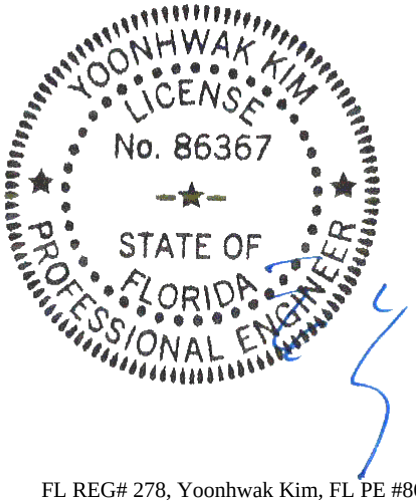

FL REG# 278, Yoonhwak Kim, FL PE #86367
11/03/2020

****WARNING**** READ AND FOLLOW ALL NOTES ON THIS DRAWING!
****IMPORTANT**** FURNISH THIS DRAWING TO ALL CONTRACTORS INCLUDING THE INSTALLERS

Trusses require extreme care in fabricating, handling, shipping, installing and bracing. Refer to and follow the latest edition of BCSI (Building Component Safety Information, by TPI and SBCA) for safety practices prior to performing these functions. Installers shall provide temporary bracing per BCSI. Unless noted otherwise, top chord shall have properly attached structural sheathing and bottom chord shall have a properly attached rigid ceiling. Locations shown for permanent lateral restraint of webs shall have bracing installed per BCSI sections B3, B7, or B10, as applicable. Apply plates to each face of truss and position as shown above and on the Joint Details, unless noted otherwise. Refer to drawings 160A-Z for standard plate positions. Refer to job's General Notes page for additional information.

Alpine, a division of ITW Building Components Group Inc. shall not be responsible for any deviation from this drawing, any failure to build the truss in conformance with ANSI/TPI 1, or for handling, shipping, installation and bracing of trusses. A seal on this drawing or cover page listing this drawing, indicates acceptance of professional engineering responsibility solely for the design shown. The suitability and use of this drawing for any structure is the responsibility of the Building Designer per ANSI/TPI 1 Sec.2.

For more information see these web sites: Alpine: alpineitw.com; TPI: tpinst.org; SBCA: sbcindustry.com; ICC: iccsafe.org; AWC: awc.org

ALPINE
AN ITW COMPANY
6750 Forum Drive
Suite 305
Orlando FL, 32821

SEQN: 384410 GABL FROM: CDM	Ply: 1 Qty: 1	**Job Number:** 20-4738 Patterson **Truss Label:** B01	Cust: R 215 JRef:1X012150003 T6 DrwNo: 308.20.0832.10683 / YK 11/03/2020

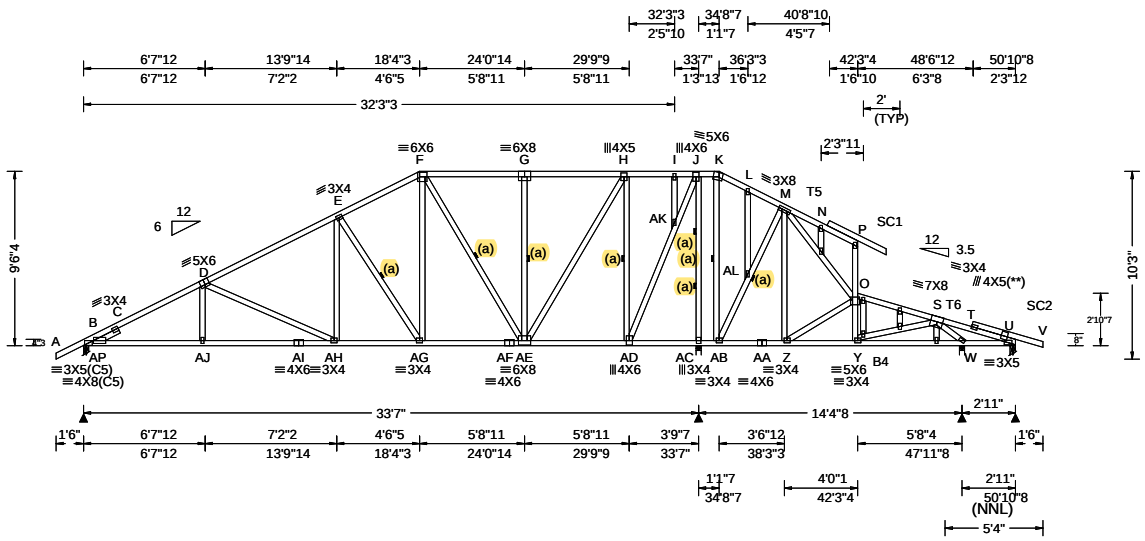

Loading Criteria (psf)	Wind Criteria	Snow Criteria (Pg,Pf in PSF)	Defl/CSI Criteria
TCLL: 20.00 TCDL: 10.00 BCLL: 0.00 BCDL: 10.00 Des Ld: 40.00 NCBCLL: 10.00 Soffit: 2.00 Load Duration: 1.25 Spacing: 24.0 "	Wind Std: ASCE 7-10 Speed: 130 mph Enclosure: Closed Risk Category: II EXP: C Kzt: NA Mean Height: 15.00 ft TCDL: 5.0 psf BCDL: 5.0 psf MWFRS Parallel Dist: h/2 to h C&C Dist a: 5.09 ft Loc. from endwall: not in 14.50 ft GCpi: 0.18 Wind Duration: 1.60	Pg: NA Ct: NA CAT: NA Pf: NA Ce: NA Lu: NA Cs: NA Snow Duration: NA Building Code: FBC 2017 RES TPI Std: 2014 Rep Fac: Varies by Ld Case FT/RT:20(0)/10(0) Plate Type(s): WAVE	PP Deflection in loc L/defl L/# VERT(LL): 0.095 AH 999 240 VERT(CL): 0.240 AH 999 180 HORZ(LL): 0.029 D - - HORZ(TL): 0.073 D - - Creep Factor: 2.0 Max TC CSI: 0.532 Max BC CSI: 0.476 Max Web CSI: 0.903 VIEW Ver: 20.01.01A.0724.11

▲ Maximum Reactions (lbs)

Loc	Gravity R+	/ R-	/ Rh	Non-Gravity / Rw	/ U	/ RL
AP	1879	/-	/-	/1013	/343	/342
AC	3235	/-	/-	/1338	/360	/-
W	925	/-	/-	/516	/-	/-
U	169	/-55	/-	/92	/101	/-

Wind reactions based on MWFRS
AP Brg Width = 3.5 Min Req = 1.6
AC Brg Width = 3.5 Min Req = 2.3
W Brg Width = 3.5 Min Req = 1.5
U Brg Width = 3.5 Min Req = 1.5
Bearings AP, AC, W, & U are a rigid surface.
Members not listed have forces less than 375#

Maximum Top Chord Forces Per Ply (lbs)

Chords	Tens.	Comp.	Chords	Tens.	Comp.
B - C	619	- 3282	H - I	236	- 439
C - D	602	- 3220	I - J	236	- 440
D - E	534	- 2563	O - S	85	- 579
E - F	501	- 1960	S - T	707	- 76
F - G	401	- 1294	T - U	723	- 136
G - H	401	- 1293			

Maximum Bot Chord Forces Per Ply (lbs)

Chords	Tens.	Comp.	Chords	Tens.	Comp.
B -AJ	2820	- 686	AF-AE	1634	- 348
AJ-AI	2818	- 686	AE-AD	497	- 110
AI-AH	2818	- 686	Z - Y	500	0
AH-AG	2139	- 484	W - U	112	- 631
AG-AF	1634	- 348			

Maximum Web Forces Per Ply (lbs)

Webs	Tens.	Comp.	Webs	Tens.	Comp.
D -AH	221	- 736	AD-AK	1856	- 422
AH- E	444	- 73	AK- J	1845	- 430
E -AG	279	- 942	J -AC	495	- 2397
F -AG	837	- 221	AB-AL	156	- 823
F -AE	176	- 646	AL- M	137	- 776
AE- H	1570	- 331	M - Z	418	- 35
G -AE	183	- 720	Z - O	52	- 492
H -AD	424	- 1836	S - W	209	- 1132

Lumber

Top chord: 2x4 SP M-31; T5,T6 2x4 SP #2;
Bot chord: 2x4 SP M-31; B4 2x4 SP #2;
Webs: 2x4 SP #3;
Stack Chord: SC1 2x4 SP #2;
Stack Chord: SC2 2x4 SP #2;
Lt Slider: 2x4 SP #3; block length = 1.500'

Bracing

(a) Continuous lateral restraint equally spaced on member.

Plating Notes

All plates are 2X4 except as noted.

(**) 1 plate(s) require special positioning. Refer to scaled plate plot details for special positioning requirements.

Loading

Truss designed to support 1-0-0 top chord outlookers and cladding load not to exceed 5.00 PSF one face and 24.0" span opposite face. Top chord must not be cut or notched, unless specified otherwise.

Purlins

In lieu of structural panels use purlins to brace all flat TC @ 24" oc.

Wind

Wind loads based on MWFRS with additional C&C member design.

Additional Notes

See DWGS A14015ENC101014 & GBLLETIN0118 for gable wind bracing and other requirements.

Stacked top chord must NOT be notched or cut in area (NNL). Attach stacked top chord (SC) to dropped top chord in notchable area using 3x4 tie-plates 24" oc. Center plate on stacked/dropped chord interface, plate length perpendicular to chord length. Splice top chord in notchable area using 3x6.

WARNING: Furnish a copy of this DWG to the installation contractor. Special care must be taken during handling, shipping and installation of trusses. See "WARNING" note below.

The overall height of this truss excluding overhang is 9-6-4.

YOONHWAK KIM
LICENSE
No. 86367
STATE OF FLORIDA
PROFESSIONAL ENGINEER

FL REG# 278, Yoonhwak Kim, FL PE #86367
11/03/2020

****WARNING**** READ AND FOLLOW ALL NOTES ON THIS DRAWING!
****IMPORTANT**** FURNISH THIS DRAWING TO ALL CONTRACTORS INCLUDING THE INSTALLERS

Trusses require extreme care in fabricating, handling, shipping, installing and bracing. Refer to and follow the latest edition of BCSI (Building Component Safety Information, by TPI and SBCA) for safety practices prior to performing these functions. Installers shall provide temporary bracing per BCSI. Unless noted otherwise, top chord shall have properly attached structural sheathing and bottom chord shall have a properly attached rigid ceiling. Locations shown for permanent lateral restraint of webs shall have bracing installed per BCSI sections B3, B7, or B10, as applicable. Apply plates to each face of truss and position as shown above and on the Joint Details, unless noted otherwise. Refer to drawings 160A-Z for standard plate positions. Refer to job's General Notes page for additional information.

Alpine, a division of ITW Building Components Group Inc. shall not be responsible for any deviation from this drawing, any failure to build the truss in conformance with ANSI/TPI 1, or for handling, shipping, installation and bracing of trusses. A seal on this drawing or cover page listing this drawing, indicates acceptance of professional engineering responsibility solely for the design shown. The suitability and use of this drawing for any structure is the responsibility of the Building Designer per ANSI/TPI 1 Sec.2.

For more information see these web sites: Alpine: alpineitw.com; TPI: tpinst.org; SBCA: sbcindustry.com; ICC: iccsafe.org; AWC: awc.org

ALPINE
AN ITW COMPANY
6750 Forum Drive
Suite 305
Orlando FL, 32821

SEQN: 384419 COMN FROM: CDM	Ply: 1 Qty: 2	**Job Number:** 20-4738 Patterson **Truss Label:** C01	Cust: R 215 JRef:1X012150003 T10 DrwNo: 308.20.0832.29717 / YK 11/03/2020

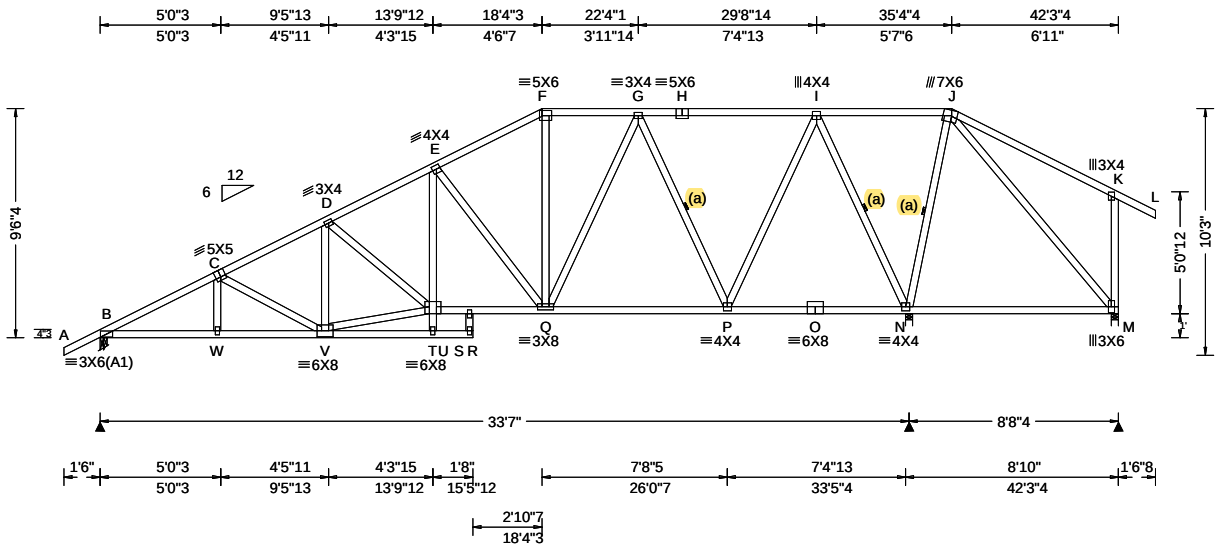

Loading Criteria (psf)

TCLL: 20.00
TCDL: 10.00
BCLL: 0.00
BCDL: 10.00
Des Ld: 40.00
NCBCLL: 10.00
Soffit: 2.00
Load Duration: 1.25
Spacing: 24.0 "

Wind Criteria

Wind Std: ASCE 7-10
Speed: 130 mph
Enclosure: Closed
Risk Category: II
EXP: C Kzt: NA
Mean Height: 15.00 ft
TCDL: 5.0 psf
BCDL: 5.0 psf
MWFRS Parallel Dist: h to 2h
C&C Dist a: 4.23 ft
Loc. from endwall: not in 13.00 ft
GCpi: 0.18
Wind Duration: 1.60

Snow Criteria (Pg,Pf in PSF)

Pg: NA Ct: NA CAT: NA
Pf: NA Ce: NA
Lu: NA Cs: NA
Snow Duration: NA

Building Code:
FBC 2017 RES
TPI Std: 2014
Rep Fac: Varies by Ld Case
FT/RT:20(0)/10(0)
Plate Type(s):
WAVE

Defl/CSI Criteria

PP Deflection in	loc	L/defl	L/#
VERT(LL): 0.098	T	999	240
VERT(CL): 0.180	T	999	180
HORZ(LL): 0.033	P	-	-
HORZ(TL): 0.061	P	-	-

Creep Factor: 2.0
Max TC CSI: 0.389
Max BC CSI: 0.405
Max Web CSI: 0.912

VIEW Ver: 20.01.01A.0724.11

▲ Maximum Reactions (lbs)

Loc	Gravity R+	/ R-	/ Rh	Non-Gravity / Rw	/ U	/ RL
B	1363	/-	/-	/845	/248	/242
N	3032	/-	/-	/1506	/431	/-
M	100	/-481	/-	/189	/305	/-

Wind reactions based on MWFRS
B Brg Width = 3.5 Min Req = 1.5
N Brg Width = 3.5 Min Req = 2.1
M Brg Width = 3.5 Min Req = 1.5
Bearings B, N, & M are a rigid surface.
Members not listed have forces less than 375#

Maximum Top Chord Forces Per Ply (lbs)

Chords	Tens.	Comp.	Chords	Tens.	Comp.
B - C	493	- 2298	F - G	411	- 1101
C - D	472	- 1975	G - H	244	- 472
D - E	503	- 1850	H - I	244	- 472
E - F	415	- 1292	I - J	800	- 128

Maximum Bot Chord Forces Per Ply (lbs)

Chords	Tens.	Comp.	Chords	Tens.	Comp.
B - W	1992	- 513	S - Q	1596	- 389
W - V	1991	- 514	Q - P	864	- 172
T - S	1563	- 382	N - M	175	- 601

Maximum Web Forces Per Ply (lbs)

Webs	Tens.	Comp.	Webs	Tens.	Comp.
V - T	1716	- 429	P - I	1294	- 253
T - E	629	- 130	I - N	468	- 1791
E - Q	271	- 838	N - J	298	- 1012
Q - G	557	- 126	J - M	934	- 272
G - P	277	- 975			

Lumber

Top chord: 2x4 SP M-31;
Bot chord: 2x4 SP M-31;
Webs: 2x4 SP #3;

Bracing

(a) Continuous lateral restraint equally spaced on member.

Special Loads

------(Lumber Dur.Fac.=1.25 / Plate Dur.Fac.=1.25)

TC: From	62 plf at	-1.50 to	62 plf at	43.81
BC: From	4 plf at	-1.50 to	4 plf at	0.00
BC: From	20 plf at	0.00 to	20 plf at	42.27
BC: From	4 plf at	42.27 to	4 plf at	43.81
BC:	25 lb Conc. Load at 13.67			

Plating Notes

All plates are 2X4 except as noted.

Purlins

In lieu of structural panels use purlins to brace all flat TC @ 24" oc.

Wind

Wind loads based on MWFRS with additional C&C member design.

Right end vertical not exposed to wind pressure.

Additional Notes

Negative reaction(s) of -481# MAX. from a non-wind load case requires uplift connection. See Maximum Reactions.

WARNING: 20 psf additional bottom chord live load check has been modified

Refer to DWG PB160101014 for piggyback details.

The overall height of this truss excluding overhang is 9-6-4.

WIND LOAD CASE MODIFIED

YOONHWAK KIM LICENSE No. 86367 STATE OF FLORIDA PROFESSIONAL ENGINEER

FL REG# 278, Yoonhwak Kim, FL PE #86367
11/03/2020

****WARNING**** READ AND FOLLOW ALL NOTES ON THIS DRAWING!
****IMPORTANT**** FURNISH THIS DRAWING TO ALL CONTRACTORS INCLUDING THE INSTALLERS

Trusses require extreme care in fabricating, handling, shipping, installing and bracing. Refer to and follow the latest edition of BCSI (Building Component Safety Information, by TPI and SBCA) for safety practices prior to performing these functions. Installers shall provide temporary bracing per BCSI. Unless noted otherwise, top chord shall have properly attached structural sheathing and bottom chord shall have a properly attached rigid ceiling. Locations shown for permanent lateral restraint of webs shall have bracing installed per BCSI sections B3, B7, or B10, as applicable. Apply plates to each face of truss and position as shown above and on the Joint Details, unless noted otherwise. Refer to drawings 160A-Z for standard plate positions. Refer to job's General Notes page for additional information.

Alpine, a division of ITW Building Components Group Inc. shall not be responsible for any deviation from this drawing, any failure to build the truss in conformance with ANSI/TPI 1, or for handling, shipping, installation and bracing of trusses. A seal on this drawing or cover page listing this drawing, indicates acceptance of professional engineering responsibility solely for the design shown. The suitability and use of this drawing for any structure is the responsibility of the Building Designer per ANSI/TPI 1 Sec.2.

For more information see these web sites: Alpine: alpineitw.com; TPI: tpinst.org; SBCA: sbcindustry.com; ICC: iccsafe.org; AWC: awc.org

ALPINE AN ITW COMPANY
6750 Forum Drive
Suite 305
Orlando FL, 32821

SEQN: 384433 COMN FROM: CDM	Ply: 1 Qty: 3	**Job Number:** 20-4738 Patterson **Truss Label:** D02	Cust: R 215 JRef:1X012150003 T9 DrwNo: 308.20.0832.32940 / YK 11/03/2020

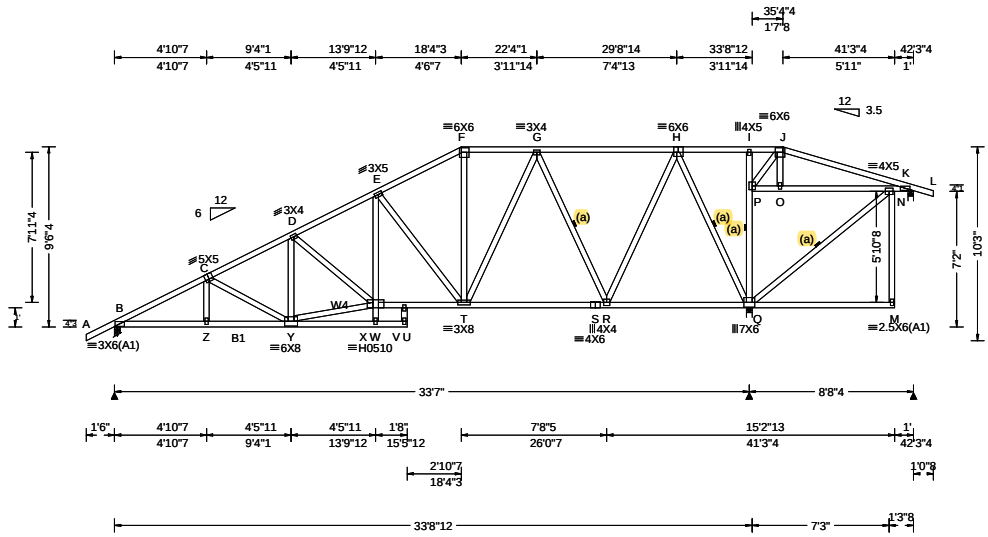

Loading Criteria (psf)

TCLL: 20.00
TCDL: 10.00
BCLL: 0.00
BCDL: 10.00
Des Ld: 40.00
NCBCLL: 10.00
Soffit: 2.00
Load Duration: 1.25
Spacing: 24.0 "

Wind Criteria

Wind Std: ASCE 7-10
Speed: 130 mph
Enclosure: Closed
Risk Category: II
EXP: C Kzt: NA
Mean Height: 15.00 ft
TCDL: 5.0 psf
BCDL: 5.0 psf
MWFRS Parallel Dist: h to 2h
C&C Dist a: 4.23 ft
Loc. from endwall: not in 13.00 ft
GCpi: 0.18
Wind Duration: 1.60

Snow Criteria (Pg,Pf in PSF)

Pg: NA Ct: NA CAT: NA
Pf: NA Ce: NA
Lu: NA Cs: NA
Snow Duration: NA

Building Code:
FBC 2017 RES
TPI Std: 2014
Rep Fac: Varies by Ld Case
FT/RT:20(0)/10(0)
Plate Type(s):
WAVE, HS

Defl/CSI Criteria

PP Deflection in	loc	L/defl	L/#
VERT(LL): 0.117	W	999	240
VERT(CL): 0.220	W	999	180
HORZ(LL): 0.038	R	-	-
HORZ(TL): 0.073	P	-	-

Creep Factor: 2.0
Max TC CSI: 0.799
Max BC CSI: 0.663
Max Web CSI: 0.915

VIEW Ver: 20.01.01A.0724.11

▲ Maximum Reactions (lbs)

Loc	Gravity R+	/ R-	/ Rh	Non-Gravity / Rw	/ U	/ RL
B	1407	/-	/-	/886	/249	/209
Q	2916	/-	/-	/1371	/456	/-
K	-	/-355	/-	/92	/208	/-

Wind reactions based on MWFRS
B Brg Width = 3.5 Min Req = 1.7
Q Brg Width = 3.5 Min Req = 2.0
K Brg Width = 3.5 Min Req = 1.5
Bearings B, Q, & K are a rigid surface.
Members not listed have forces less than 375#

Maximum Top Chord Forces Per Ply (lbs)

Chords	Tens.	Comp.	Chords	Tens.	Comp.
B - C	460	- 2392	G - H	204	- 613
C - D	438	- 2071	H - I	746	- 128
D - E	481	- 1970	I - J	750	- 128
E - F	389	- 1400	J - K	565	- 58
F - G	387	- 1198			

Maximum Bot Chord Forces Per Ply (lbs)

Chords	Tens.	Comp.	Chords	Tens.	Comp.
B - Z	2076	- 568	T - S	989	- 227
Z - Y	2074	- 569	S - R	989	- 227
W - V	1667	- 447	N - K	122	- 531
V - T	1703	- 456			

Maximum Web Forces Per Ply (lbs)

Webs	Tens.	Comp.	Webs	Tens.	Comp.
Y - W	1802	- 485	R - H	1301	- 275
W - E	631	- 137	H - Q	455	- 1741
E - T	279	- 841	Q - N	278	- 962
F - T	390	- 63	P - Q	166	- 442
T - G	525	- 140	P - J	182	- 428
G - R	300	- 946			

Lumber

Top chord: 2x4 SP #2;
Bot chord: 2x4 SP M-31; B1 2x4 SP #2;
Webs: 2x4 SP #3; W4 2x4 SP #2;

Bracing

(a) Continuous lateral restraint equally spaced on member.

Special Loads

------(Lumber Dur.Fac.=1.25 / Plate Dur.Fac.=1.25)

TC: From	62 plf at	-1.50 to	62 plf at	18.35
TC: From	61 plf at	18.35 to	61 plf at	43.31
BC: From	4 plf at	-1.50 to	4 plf at	0.00
BC: From	20 plf at	0.00 to	20 plf at	20.43
BC: From	60 plf at	20.43 to	60 plf at	24.25
BC: From	20 plf at	24.25 to	20 plf at	27.83
BC: From	60 plf at	27.83 to	60 plf at	31.65
BC: From	20 plf at	31.65 to	20 plf at	38.28
BC: From	60 plf at	38.28 to	60 plf at	40.98
BC: From	20 plf at	40.98 to	20 plf at	42.27
BC: From	4 plf at	42.27 to	4 plf at	43.31
BC: 25 lb Conc. Load at 13.96				

Plating Notes

All plates are 2X4 except as noted.

Purlins

In lieu of structural panels use purlins to brace all flat TC @ 24" oc.

Wind

Wind loads based on MWFRS with additional C&C member design.

Additional Notes

Negative reaction(s) of -355# MAX. from a non-wind load case requires uplift connection. See Maximum Reactions.

WARNING: 20 psf additional bottom chord live load check has been modified

Refer to DWG PB160101014 for piggyback details.

The overall height of this truss excluding overhang is 9-6-4.

WIND LOAD CASE MODIFIED!

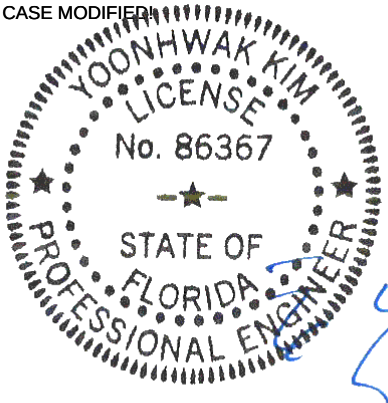

FL REG# 278, Yoonhwak Kim, FL PE #86367
11/03/2020

****WARNING**** READ AND FOLLOW ALL NOTES ON THIS DRAWING!
****IMPORTANT**** FURNISH THIS DRAWING TO ALL CONTRACTORS INCLUDING THE INSTALLERS

Trusses require extreme care in fabricating, handling, shipping, installing and bracing. Refer to and follow the latest edition of BCSI (Building Component Safety Information, by TPI and SBCA) for safety practices prior to performing these functions. Installers shall provide temporary bracing per BCSI. Unless noted otherwise, top chord shall have properly attached structural sheathing and bottom chord shall have a properly attached rigid ceiling. Locations shown for permanent lateral restraint of webs shall have bracing installed per BCSI sections B3, B7, or B10, as applicable. Apply plates to each face of truss and position as shown above and on the Joint Details, unless noted otherwise. Refer to drawings 160A-Z for standard plate positions. Refer to job's General Notes page for additional information.

Alpine, a division of ITW Building Components Group Inc. shall not be responsible for any deviation from this drawing, any failure to build the truss in conformance with ANSI/TPI 1, or for handling, shipping, installation and bracing of trusses. A seal on this drawing or cover page listing this drawing, indicates acceptance of professional engineering responsibility solely for the design shown. The suitability and use of this drawing for any structure is the responsibility of the Building Designer per ANSI/TPI 1 Sec.2.

For more information see these web sites: Alpine: alpineitw.com; TPI: tpinst.org; SBCA: sbcindustry.com; ICC: iccsafe.org; AWC: awc.org

ALPINE AN ITW COMPANY
6750 Forum Drive
Suite 305
Orlando FL, 32821

SEQN: 384482 COMN FROM: CDM	Ply: 1 Qty: 2	**Job Number:** 20-4738 Patterson **Truss Label:** D03	Cust: R 215 JRef:1X012150003 T47 DrwNo: 308.20.0832.34877 / YK 11/03/2020

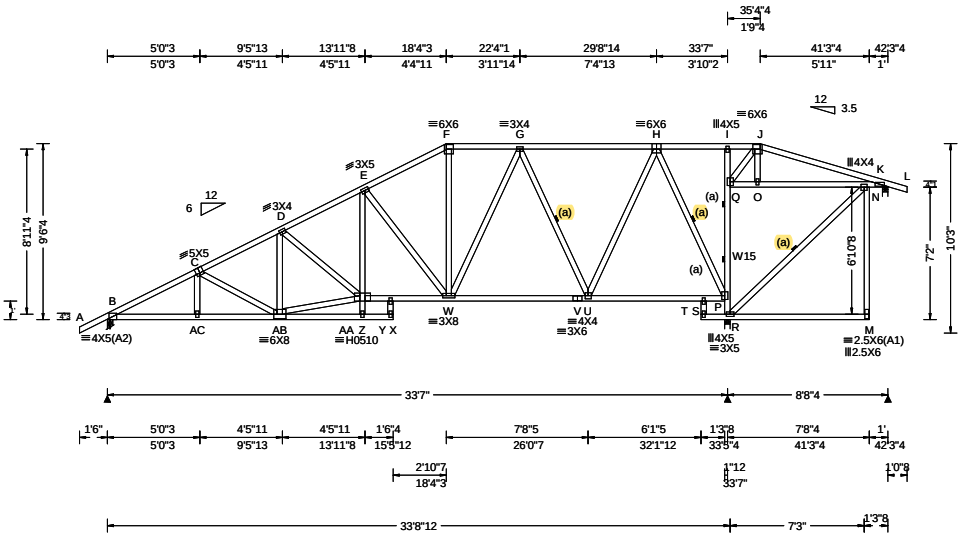

Loading Criteria (psf)

TCLL:	20.00
TCDL:	10.00
BCLL:	0.00
BCDL:	10.00
Des Ld:	40.00
NCBCLL:	10.00
Soffit:	2.00

Load Duration: 1.25
Spacing: 24.0 "

Wind Criteria
Wind Std: ASCE 7-10
Speed: 130 mph
Enclosure: Closed
Risk Category: II
EXP: C Kzt: NA
Mean Height: 15.00 ft
TCDL: 5.0 psf
BCDL: 5.0 psf
MWFRS Parallel Dist: h to 2h
C&C Dist a: 4.23 ft
Loc. from endwall: not in 13.00 ft
GCpi: 0.18
Wind Duration: 1.60

Snow Criteria (Pg,Pf in PSF)
Pg: NA Ct: NA CAT: NA
Pf: NA Ce: NA
Lu: NA Cs: NA
Snow Duration: NA

Building Code:
FBC 2017 RES
TPI Std: 2014
Rep Fac: Yes
FT/RT:20(0)/10(0)
Plate Type(s):
WAVE, HS

Defl/CSI Criteria

PP Deflection in	loc	L/defl	L/#
VERT(LL): 0.134	Z	999	240
VERT(CL): 0.247	Z	999	180
HORZ(LL): 0.051	S	-	-
HORZ(TL): 0.095	S	-	-

Creep Factor: 2.0
Max TC CSI: 0.619
Max BC CSI: 0.820
Max Web CSI: 0.898

VIEW Ver: 20.01.01A.0724.11

▲ Maximum Reactions (lbs)

Loc	Gravity R+	/ R-	/ Rh	Non-Gravity / Rw	/ U	/ RL
B	1486	/-	/-	/937	/95	/209
P	2421	/-	/-	/1140	/247	/-
K	251	/-12	/-	/139	/56	/-

Wind reactions based on MWFRS
B Brg Width = 3.5 Min Req = 1.8
P Brg Width = 3.5 Min Req = 2.5
K Brg Width = 3.5 Min Req = 1.5
Bearings B, P, & K are a rigid surface.
Members not listed have forces less than 375#

Maximum Top Chord Forces Per Ply (lbs)

Chords	Tens.	Comp.	Chords	Tens.	Comp.
B - C	522	- 2557	E - F	462	- 1612
C - D	503	- 2245	F - G	453	- 1389
D - E	557	- 2170	G - H	297	- 895

Maximum Bot Chord Forces Per Ply (lbs)

Chords	Tens.	Comp.	Chords	Tens.	Comp.
B -AC	2223	- 623	W - V	1226	- 307
AC-AB	2221	- 624	V - U	1226	- 307
Z - Y	1838	- 513	U - S	428	- 99
Y - W	1883	- 524	S - R	490	- 118

Maximum Web Forces Per Ply (lbs)

Webs	Tens.	Comp.	Webs	Tens.	Comp.
AB- Z	1950	- 541	U - H	1151	- 237
Z - E	615	- 142	H - R	421	- 1604
E - W	283	- 825	R - P	529	- 1829
F - W	483	- 97	Q - R	154	- 399
W - G	399	- 109	Q - J	194	- 462
G - U	269	- 820	P - N	113	- 388

Lumber
Top chord: 2x4 SP #2;
Bot chord: 2x4 SP #2;
Webs: 2x4 SP #3; W15 2x4 SP #2;

Bracing
(a) Continuous lateral restraint equally spaced on member.

Plating Notes
All plates are 2X4 except as noted.

Loading
Truss passed check for 20 psf additional bottom chord live load in areas with 42"-high x 24"-wide clearance.

Purlins
In lieu of structural panels use purlins to brace all flat TC @ 24" oc.

Wind
Wind loads based on MWFRS with additional C&C member design.

Additional Notes
Refer to DWG PB160101014 for piggyback details.
The overall height of this truss excluding overhang is 9-6-4.

YOONHWAK KIM
LICENSE
No. 86367
STATE OF
FLORIDA
PROFESSIONAL ENGINEER

FL REG# 278, Yoonhwak Kim, FL PE #86367
11/03/2020

****WARNING**** READ AND FOLLOW ALL NOTES ON THIS DRAWING!
****IMPORTANT**** FURNISH THIS DRAWING TO ALL CONTRACTORS INCLUDING THE INSTALLERS

Trusses require extreme care in fabricating, handling, shipping, installing and bracing. Refer to and follow the latest edition of BCSI (Building Component Safety Information, by TPI and SBCA) for safety practices prior to performing these functions. Installers shall provide temporary bracing per BCSI. Unless noted otherwise, top chord shall have properly attached structural sheathing and bottom chord shall have a properly attached rigid ceiling. Locations shown for permanent lateral restraint of webs shall have bracing installed per BCSI sections B3, B7, or B10, as applicable. Apply plates to each face of truss and position as shown above and on the Joint Details, unless noted otherwise. Refer to drawings 160A-Z for standard plate positions. Refer to job's General Notes page for additional information.

Alpine, a division of ITW Building Components Group Inc. shall not be responsible for any deviation from this drawing, any failure to build the truss in conformance with ANSI/TPI 1, or for handling, shipping, installation and bracing of trusses. A seal on this drawing or cover page listing this drawing, indicates acceptance of professional engineering responsibility solely for the design shown. The suitability and use of this drawing for any structure is the responsibility of the Building Designer per ANSI/TPI 1 Sec.2.

For more information see these web sites: Alpine: alpineitw.com; TPI: tpinst.org; SBCA: sbcindustry.com; ICC: iccsafe.org; AWC: awc.org

ALPINE AN ITW COMPANY
6750 Forum Drive
Suite 305
Orlando FL, 32821

SEQN: 384491 COMN FROM: CDM	Ply: 1 Qty: 2	**Job Number:** 20-4738 Patterson **Truss Label:** D04	Cust: R 215 JRef:1X012150003 T29 DrwNo: 308.20.0832.36087 / YK 11/03/2020

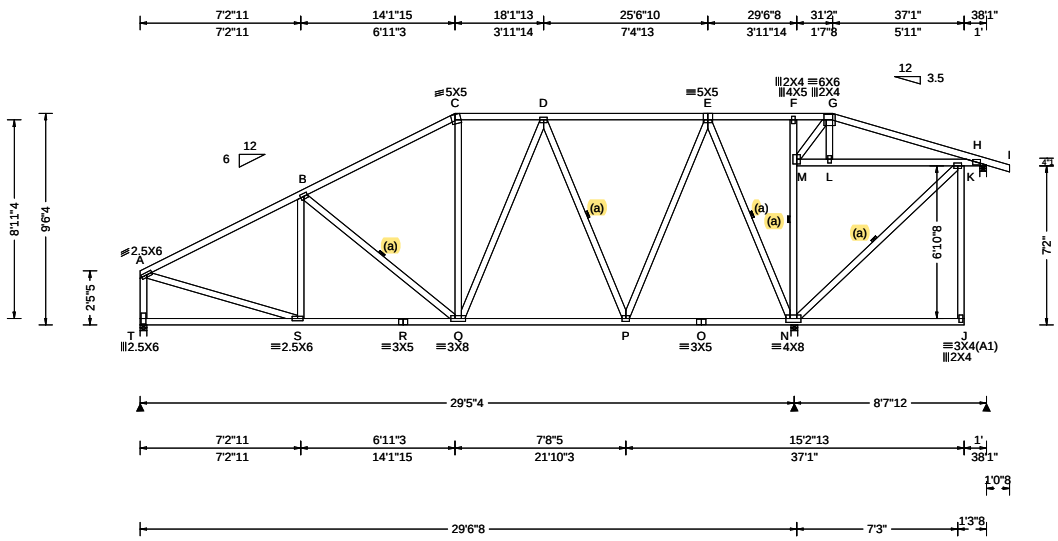

Loading Criteria (psf)	**Wind Criteria**	**Snow Criteria** (Pg,Pf in PSF)	**Defl/CSI Criteria**
TCLL: 20.00 TCDL: 10.00 BCLL: 0.00 BCDL: 10.00 Des Ld: 40.00 NCBCLL: 10.00 Soffit: 2.00 Load Duration: 1.25 Spacing: 24.0 "	Wind Std: ASCE 7-10 Speed: 130 mph Enclosure: Closed Risk Category: II EXP: C Kzt: NA Mean Height: 15.00 ft TCDL: 5.0 psf BCDL: 5.0 psf MWFRS Parallel Dist: h to 2h C&C Dist a: 3.81 ft Loc. from endwall: not in 9.00 ft GCpi: 0.18 Wind Duration: 1.60	Pg: NA Ct: NA CAT: NA Pf: NA Ce: NA Lu: NA Cs: NA Snow Duration: NA Building Code: FBC 2017 RES TPI Std: 2014 Rep Fac: No FT/RT:20(0)/10(0) Plate Type(s): WAVE	PP Deflection in loc L/defl L/# VERT(LL): 0.040 Q 999 240 VERT(CL): 0.083 Q 999 180 HORZ(LL): 0.012 B - - HORZ(TL): 0.026 M - - Creep Factor: 2.0 Max TC CSI: 0.855 Max BC CSI: 0.666 Max Web CSI: 0.658 VIEW Ver: 20.01.01A.0724.11

▲ Maximum Reactions (lbs)

	Gravity			Non-Gravity		
Loc	R+	/ R-	/ Rh	/ Rw	/ U	/ RL
T	1126	/-	/-	/699	/64	/152
N	2042	/-	/-	/1057	/223	/-
H	105	/-61	/-	/75	/46	/-

Wind reactions based on MWFRS
T Brg Width = 3.5 Min Req = 1.5
N Brg Width = 3.5 Min Req = 2.0
H Brg Width = 3.5 Min Req = 1.5
Bearings T, N, & H are a rigid surface.
Members not listed have forces less than 375#

Maximum Top Chord Forces Per Ply (lbs)

Chords	Tens.	Comp.	Chords	Tens.	Comp.
A - B	302	- 1323	C - D	335	- 854
B - C	317	- 1063	D - E	215	- 529

Maximum Bot Chord Forces Per Ply (lbs)

Chords	Tens.	Comp.	Chords	Tens.	Comp.
S - R	1114	- 353	Q - P	763	- 203
R - Q	1114	- 353			

Maximum Web Forces Per Ply (lbs)

Webs	Tens.	Comp.	Webs	Tens.	Comp.
A - T	265	- 1066	E - N	379	- 1262
A - S	1119	- 207	M - G	172	- 395
D - P	234	- 669	N - K	174	- 482
P - E	825	- 208			

Lumber

Top chord: 2x4 SP #2;
Bot chord: 2x4 SP #2;
Webs: 2x4 SP #3;

Bracing

(a) Continuous lateral restraint equally spaced on member.

Plating Notes

All plates are 3X4 except as noted.

Purlins

In lieu of structural panels use purlins to brace all flat TC @ 24" oc.

Wind

Wind loads based on MWFRS with additional C&C member design.

Left end vertical not exposed to wind pressure.

Additional Notes

The overall height of this truss excluding overhang is 9-6-4.

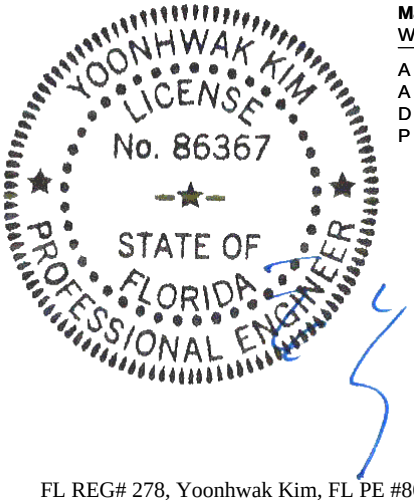

FL REG# 278, Yoonhwak Kim, FL PE #86367
11/03/2020

****WARNING**** READ AND FOLLOW ALL NOTES ON THIS DRAWING!
****IMPORTANT**** FURNISH THIS DRAWING TO ALL CONTRACTORS INCLUDING THE INSTALLERS

Trusses require extreme care in fabricating, handling, shipping, installing and bracing. Refer to and follow the latest edition of BCSI (Building Component Safety Information, by TPI and SBCA) for safety practices prior to performing these functions. Installers shall provide temporary bracing per BCSI. Unless noted otherwise, top chord shall have properly attached structural sheathing and bottom chord shall have a properly attached rigid ceiling. Locations shown for permanent lateral restraint of webs shall have bracing installed per BCSI sections B3, B7, or B10, as applicable. Apply plates to each face of truss and position as shown above and on the Joint Details, unless noted otherwise. Refer to drawings 160A-Z for standard plate positions. Refer to job's General Notes page for additional information.

Alpine, a division of ITW Building Components Group Inc. shall not be responsible for any deviation from this drawing, any failure to build the truss in conformance with ANSI/TPI 1, or for handling, shipping, installation and bracing of trusses. A seal on this drawing or cover page listing this drawing, indicates acceptance of professional engineering responsibility solely for the design shown. The suitability and use of this drawing for any structure is the responsibility of the Building Designer per ANSI/TPI 1 Sec.2.

For more information see these web sites: Alpine: alpineitw.com; TPI: tpinst.org; SBCA: sbcindustry.com; ICC: iccsafe.org; AWC: awc.org

ALPINE AN ITW COMPANY
6750 Forum Drive
Suite 305
Orlando FL, 32821

SEQN: 384452 FLAT FROM: CDM	Ply: 3 Qty: 1	**Job Number:** 20-4738 Patterson **Truss Label:** FT1	Cust: R 215 JRef:1X012150003 T30 DrwNo: 308.20.0832.47590 / YK 11/03/2020

3 Complete Trusses Required

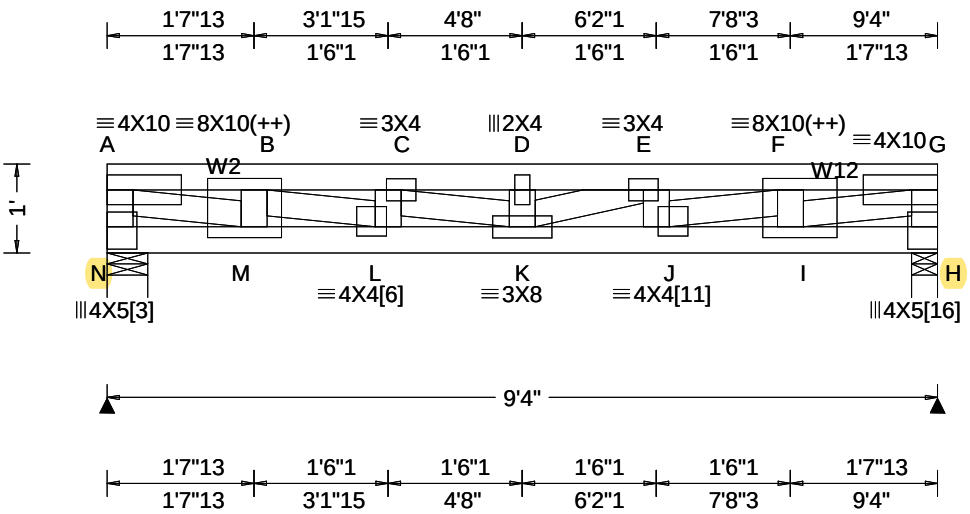

Loading Criteria (psf)

TCLL: 20.00
TCDL: 10.00
BCLL: 0.00
BCDL: 10.00
Des Ld: 40.00
NCBCLL: 0.00
Soffit: 2.00
Load Duration: 1.25
Spacing: 24.0 "

Wind Criteria

Wind Std: ASCE 7-10
Speed: 130 mph
Enclosure: Closed
Risk Category: II
EXP: C Kzt: NA
Mean Height: 15.00 ft
TCDL: 5.0 psf
BCDL: 5.0 psf
MWFRS Parallel Dist: 0 to h/2
C&C Dist a: 3.00 ft
Loc. from endwall: not in 4.50 ft
GCpi: 0.18
Wind Duration: 1.60

Snow Criteria (Pg,Pf in PSF)

Pg: NA Ct: NA CAT: NA
Pf: NA Ce: NA
Lu: NA Cs: NA
Snow Duration: NA

Building Code:
FBC 2017 RES
TPI Std: 2014
Rep Fac: Yes
FT/RT:20(0)/10(0)
Plate Type(s):
WAVE

Defl/CSI Criteria

PP Deflection in	loc	L/defl	L/#
VERT(LL): 0.146	D	765	240
VERT(CL): 0.292	D	382	180
HORZ(LL): 0.029	A	-	-
HORZ(TL): 0.058	A	-	-

Creep Factor: 2.0
Max TC CSI: 0.603
Max BC CSI: 0.820
Max Web CSI: 0.817

VIEW Ver: 20.01.01A.0724.11

▲Maximum Reactions (lbs)

Loc	Gravity R+	/ R-	/ Rh	Non-Gravity / Rw	/ U	/ RL
N	7310	/-	/-	/191	/1407	/-
H	8637	/-	/-	/191	/1663	/-

Wind reactions based on MWFRS
N Brg Width = 5.5 Min Req = 2.0
H Brg Width = 3.5 Min Req = 2.4
Bearings N & H are a rigid surface.
Members not listed have forces less than 375#

Maximum Top Chord Forces Per Ply (lbs)

Chords	Tens.	Comp.	Chords	Tens.	Comp.
A - B	795	- 4135	D - E	1517	- 7885
B - C	1305	- 6786	E - F	1324	- 6883
C - D	1517	- 7885	F - G	807	- 4197

Maximum Bot Chord Forces Per Ply (lbs)

Chords	Tens.	Comp.	Chords	Tens.	Comp.
M - L	4955	- 955	K - J	7323	- 1411
L - K	7219	- 1391	J - I	5030	- 970

Maximum Web Forces Per Ply (lbs)

Webs	Tens.	Comp.	Webs	Tens.	Comp.
A - N	453	- 2341	D - K	134	- 664
A - M	4528	- 870	E - J	229	- 1157
M - B	422	- 2153	J - F	2144	- 410
B - L	2119	- 405	F - I	429	- 2188
L - C	225	- 1139	I - G	4599	- 884
C - K	750	- 143	G - H	538	- 2781
K - E	633	- 120			

Lumber

Top chord: 2x4 SP M-31;
Bot chord: 2x4 SP M-31;
Webs: 2x4 SP #3; W2,W12 2x4 SP M-31;

Nailnote

Nail Schedule:0.131"x3", min. nails
Top Chord: 1 Row @ 1.00" o.c.
Bot Chord: 1 Row @12.00" o.c.
Webs : 1 Row @ 4" o.c.
Repeat nailing as each layer is applied. Use equal spacing between rows and stagger nails in each row to avoid splitting.

Special Loads

------(Lumber Dur.Fac.=1.25 / Plate Dur.Fac.=1.25)
TC: From 60 plf at 0.00 to 60 plf at 9.33
BC: From 20 plf at 0.00 to 20 plf at 9.33
TC: 2916 lb Conc. Load at 1.00, 3.00, 5.00
TC: 389 lb Conc. Load at 6.10
TC: 3032 lb Conc. Load at 7.00, 9.00

Plating Notes

(++) - This plate works for both joints covered.

Plate Shift Table

JT No	Plate Size	Lateral Shift	Chord Bite	JT No	Plate Size	Lateral Shift	Chord Bite
[3]	4X5	O	3.00	[6]	4X4	1.50 R	1.25
[11]	4X4	2.50 R	1.25	[16]	4X5	O	3.00

Purlins

The TC of this truss shall be braced with attached spans at 24" oc in lieu of structural sheathing.

Wind

Wind loads based on MWFRS.

End verticals not exposed to wind pressure.

Additional Notes

Truss must be installed as shown with top chord up.

The overall height of this truss excluding overhang is 1-0-0.

WIND LOAD CASE MODIFIED!

It is the responsibility of the Building Designer and Truss Fabricator to review this drawing prior to cutting lumber to verify that all data, including dimensions and loads, conform to the architectural plans/specifications and fabricators truss layout.

YOONHWAK KIM
No. 86367
STATE OF FLORIDA
PROFESSIONAL ENGINEER

FL REG# 278, Yoonhwak Kim, FL PE #86367
11/03/2020

****WARNING**** READ AND FOLLOW ALL NOTES ON THIS DRAWING!
****IMPORTANT**** FURNISH THIS DRAWING TO ALL CONTRACTORS INCLUDING THE INSTALLERS

Trusses require extreme care in fabricating, handling, shipping, installing and bracing. Refer to and follow the latest edition of BCSI (Building Component Safety Information, by TPI and SBCA) for safety practices prior to performing these functions. Installers shall provide temporary bracing per BCSI. Unless noted otherwise, top chord shall have properly attached structural sheathing and bottom chord shall have a properly attached rigid ceiling. Locations shown for permanent lateral restraint of webs shall have bracing installed per BCSI sections B3, B7, or B10, as applicable. Apply plates to each face of truss and position as shown above and on the Joint Details, unless noted otherwise. Refer to drawings 160A-Z for standard plate positions. Refer to job's General Notes page for additional information.

Alpine, a division of ITW Building Components Group Inc. shall not be responsible for any deviation from this drawing, any failure to build the truss in conformance with ANSI/TPI 1, or for handling, shipping, installation and bracing of trusses. A seal on this drawing or cover page listing this drawing, indicates acceptance of professional engineering responsibility solely for the design shown. The suitability and use of this drawing for any structure is the responsibility of the Building Designer per ANSI/TPI 1 Sec.2.

For more information see these web sites: Alpine: alpineitw.com; TPI: tpinst.org; SBCA: sbcindustry.com; ICC: iccsafe.org; AWC: awc.org

ALPINE AN ITW COMPANY
6750 Forum Drive
Suite 305
Orlando FL, 32821

SEQN: 384455 COMN FROM: CDM	Ply: 1 Qty: 5	**Job Number:** 20-4738 Patterson **Truss Label:** G01	Cust: R 215 JRef:1X012150003 T42 DrwNo: 308.20.0832.49107 / YK 11/03/2020

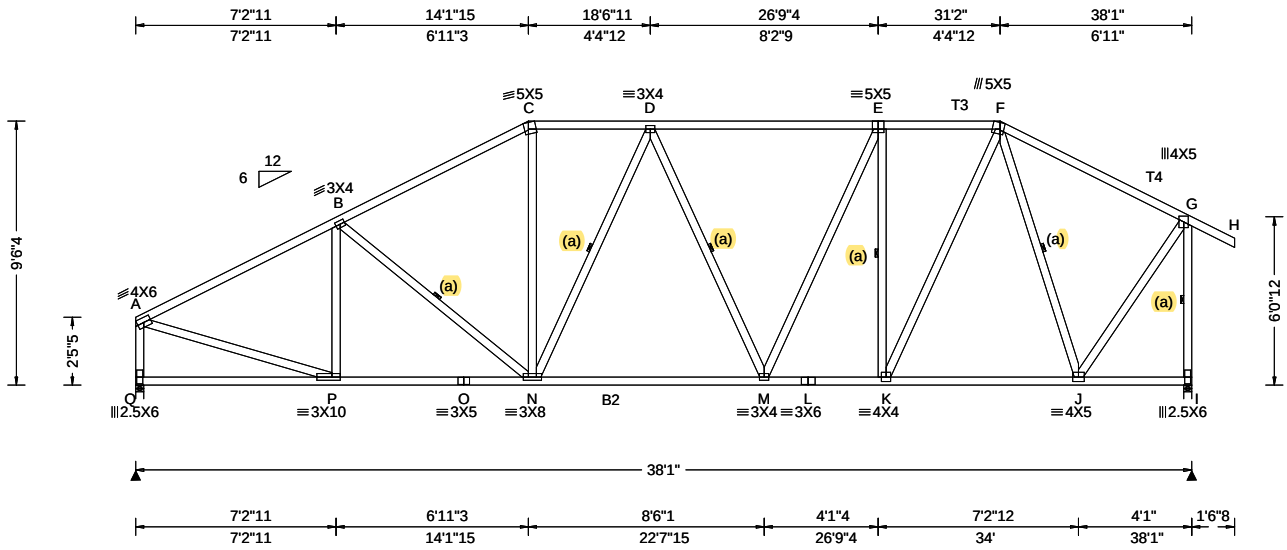

Loading Criteria (psf)

TCLL:	20.00
TCDL:	10.00
BCLL:	0.00
BCDL:	10.00
Des Ld:	40.00
NCBCLL:	10.00
Soffit:	2.00

Load Duration: 1.25
Spacing: 24.0 "

Wind Criteria
Wind Std: ASCE 7-10
Speed: 130 mph
Enclosure: Closed
Risk Category: II
EXP: C Kzt: NA
Mean Height: 15.00 ft
TCDL: 5.0 psf
BCDL: 5.0 psf
MWFRS Parallel Dist: h to 2h
C&C Dist a: 3.81 ft
Loc. from endwall: not in 9.00 ft
GCpi: 0.18
Wind Duration: 1.60

Snow Criteria (Pg,Pf in PSF)
Pg: NA Ct: NA CAT: NA
Pf: NA Ce: NA
Lu: NA Cs: NA
Snow Duration: NA

Building Code:
FBC 2017 RES
TPI Std: 2014
Rep Fac: Yes
FT/RT:20(0)/10(0)
Plate Type(s):
WAVE

Defl/CSI Criteria

PP Deflection in	loc	L/defl	L/#
VERT(LL): 0.105	D	999	240
VERT(CL): 0.188	D	999	180
HORZ(LL): 0.037	J	-	-
HORZ(TL): 0.066	J	-	-

Creep Factor: 2.0
Max TC CSI: 0.727
Max BC CSI: 0.732
Max Web CSI: 0.759

VIEW Ver: 20.01.01A.0724.11

▲Maximum Reactions (lbs)

Loc	Gravity R+	/ R-	/ Rh	Non-Gravity / Rw	/ U	/ RL
Q	1792	/-	/-	/926	/97	/324
I	1974	/-	/-	/897	/152	/-

Wind reactions based on MWFRS
Q Brg Width = 3.5 Min Req = 2.1
I Brg Width = 3.5 Min Req = 2.3
Bearings Q & I are a rigid surface.
Members not listed have forces less than 375#

Maximum Top Chord Forces Per Ply (lbs)

Chords	Tens.	Comp.	Chords	Tens.	Comp.
A - B	518	- 2252	D - E	558	- 1881
B - C	574	- 2165	E - F	527	- 1656
C - D	544	- 1848	F - G	365	- 1067

Maximum Bot Chord Forces Per Ply (lbs)

Chords	Tens.	Comp.	Chords	Tens.	Comp.
P - O	1953	- 625	M - L	1682	- 473
O - N	1953	- 625	L - K	1682	- 473
N - M	1964	- 563	K - J	1180	- 360

Maximum Web Forces Per Ply (lbs)

Webs	Tens.	Comp.	Webs	Tens.	Comp.
A - Q	427	- 1732	K - F	1169	- 259
A - P	1991	- 383	F - J	283	- 1042
C - N	638	- 149	J - G	1510	- 304
M - E	491	- 99	G - I	548	- 1971
E - K	253	- 837			

Lumber
Top chord: 2x4 SP M-31; T3,T4 2x4 SP #2;
Bot chord: 2x4 SP #2; B2 2x4 SP M-31;
Webs: 2x4 SP #3;

Bracing
(a) Continuous lateral restraint equally spaced on member.

Loading
Truss passed check for 20 psf additional bottom chord live load in areas with 42"-high x 24"-wide clearance.

Purlins
In lieu of structural panels use purlins to brace all flat TC @ 24" oc.

Wind
Wind loads based on MWFRS with additional C&C member design.
Left end vertical not exposed to wind pressure.
Right end vertical exposed to wind pressure. Deflection meets L/360.

Additional Notes
The overall height of this truss excluding overhang is 9-6-4.

YOONHWAK KIM
LICENSE
No. 86367
STATE OF FLORIDA
PROFESSIONAL ENGINEER

FL REG# 278, Yoonhwak Kim, FL PE #86367
11/03/2020

****WARNING**** READ AND FOLLOW ALL NOTES ON THIS DRAWING!
****IMPORTANT**** FURNISH THIS DRAWING TO ALL CONTRACTORS INCLUDING THE INSTALLERS

Trusses require extreme care in fabricating, handling, shipping, installing and bracing. Refer to and follow the latest edition of BCSI (Building Component Safety Information, by TPI and SBCA) for safety practices prior to performing these functions. Installers shall provide temporary bracing per BCSI. Unless noted otherwise, top chord shall have properly attached structural sheathing and bottom chord shall have a properly attached rigid ceiling. Locations shown for permanent lateral restraint of webs shall have bracing installed per BCSI sections B3, B7, or B10, as applicable. Apply plates to each face of truss and position as shown above and on the Joint Details, unless noted otherwise. Refer to drawings 160A-Z for standard plate positions. Refer to job's General Notes page for additional information.

Alpine, a division of ITW Building Components Group Inc. shall not be responsible for any deviation from this drawing, any failure to build the truss in conformance with ANSI/TPI 1, or for handling, shipping, installation and bracing of trusses. A seal on this drawing or cover page listing this drawing, indicates acceptance of professional engineering responsibility solely for the design shown. The suitability and use of this drawing for any structure is the responsibility of the Building Designer per ANSI/TPI 1 Sec.2.

For more information see these web sites: Alpine: alpineitw.com; TPI: tpinst.org; SBCA: sbcindustry.com; ICC: iccsafe.org; AWC: awc.org

ALPINE AN ITW COMPANY
6750 Forum Drive
Suite 305
Orlando FL, 32821

SEQN: 384458 COMN FROM: CDM	Ply: 1 Qty: 2	**Job Number:** 20-4738 Patterson **Truss Label:** G02	Cust: R 215 JRef:1X012150003 T31 DrwNo: 308.20.0832.50243 / YK 11/03/2020

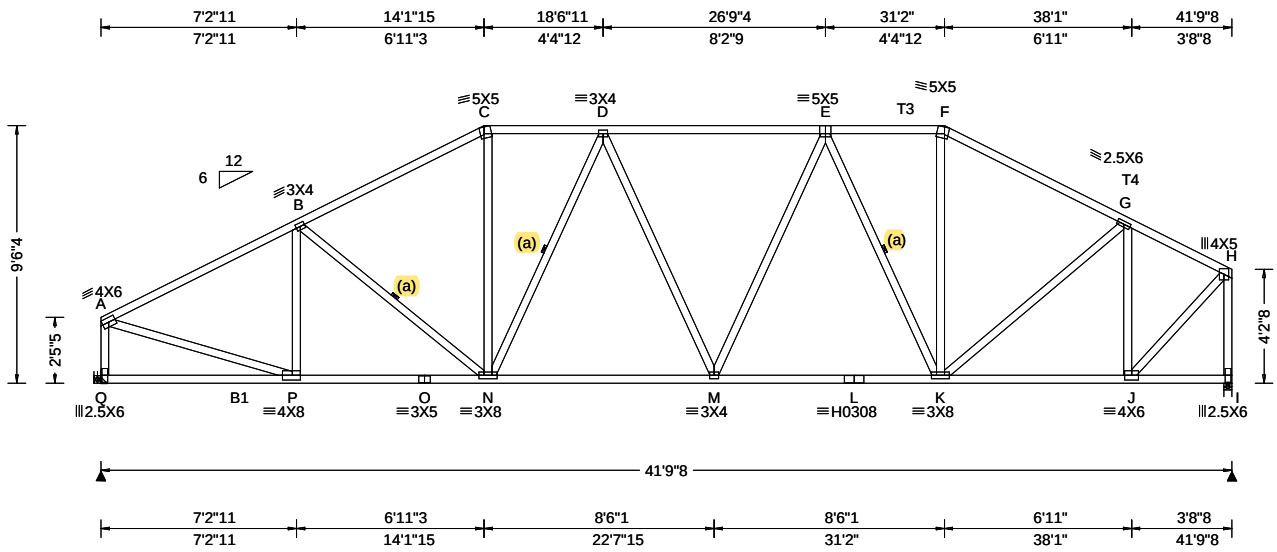

Loading Criteria (psf)

TCLL: 20.00
TCDL: 10.00
BCLL: 0.00
BCDL: 10.00
Des Ld: 40.00
NCBCLL: 10.00
Soffit: 2.00
Load Duration: 1.25
Spacing: 24.0 "

Wind Criteria

Wind Std: ASCE 7-10
Speed: 130 mph
Enclosure: Closed
Risk Category: II
EXP: C Kzt: NA
Mean Height: 15.00 ft
TCDL: 5.0 psf
BCDL: 5.0 psf
MWFRS Parallel Dist: h/2 to h
C&C Dist a: 4.18 ft
Loc. from endwall: not in 13.00 ft
GCpi: 0.18
Wind Duration: 1.60

Snow Criteria (Pg,Pf in PSF)

Pg: NA Ct: NA CAT: NA
Pf: NA Ce: NA
Lu: NA Cs: NA
Snow Duration: NA

Building Code:
FBC 2017 RES
TPI Std: 2014
Rep Fac: Yes
FT/RT:20(0)/10(0)
Plate Type(s):
WAVE, HS

Defl/CSI Criteria

PP Deflection in	loc	L/defl	L/#
VERT(LL): 0.126	D	999	240
VERT(CL): 0.226	D	999	180
HORZ(LL): 0.045	I	-	-
HORZ(TL): 0.081	I	-	-

Creep Factor: 2.0
Max TC CSI: 0.677
Max BC CSI: 0.774
Max Web CSI: 0.849

VIEW Ver: 20.01.01A.0724.11

▲Maximum Reactions (lbs)

Loc	Gravity R+	Gravity / R-	Gravity / Rh	Non-Gravity / Rw	Non-Gravity / U	Non-Gravity / RL
Q	1975	/-	/-	/1025	/101	/179
I	2021	/-	/-	/936	/90	/-

Wind reactions based on MWFRS
Q Brg Width = - Min Req = -
I Brg Width = 3.5 Min Req = 1.7
Bearing I is a rigid surface.
Members not listed have forces less than 375#

Maximum Top Chord Forces Per Ply (lbs)

Chords	Tens.	Comp.	Chords	Tens.	Comp.
A - B	210	- 2507	E - F	218	- 1825
B - C	198	- 2475	F - G	182	- 2128
C - D	230	- 2127	G - H	141	- 1424
D - E	166	- 2343			

Maximum Bot Chord Forces Per Ply (lbs)

Chords	Tens.	Comp.	Chords	Tens.	Comp.
P - O	2184	- 182	M - L	2180	0
O - N	2184	- 182	L - K	2180	0
N - M	2335	0	K - J	1289	- 94

Maximum Web Forces Per Ply (lbs)

Webs	Tens.	Comp.	Webs	Tens.	Comp.
A - Q	204	- 1915	E - K	1	- 849
A - P	2229	- 124	K - F	590	0
P - B	75	- 431	K - G	694	- 2
C - N	774	- 27	G - J	113	- 1131
N - D	35	- 496	J - H	1803	- 130
M - E	401	- 20	H - I	190	- 2001

Lumber

Top chord: 2x4 SP M-31; T3,T4 2x4 SP #2;
Bot chord: 2x4 SP M-31; B1 2x4 SP #2;
Webs: 2x4 SP #3;

Bracing

(a) Continuous lateral restraint equally spaced on member.

Hangers / Ties

(J) Hanger Support Required, by others

Loading

Truss passed check for 20 psf additional bottom chord live load in areas with 42"-high x 24"-wide clearance.

Purlins

In lieu of structural panels use purlins to brace all flat TC @ 24" oc.

Wind

Wind loads based on MWFRS with additional C&C member design.

End verticals not exposed to wind pressure.

Additional Notes

The overall height of this truss excluding overhang is 9-6-4.

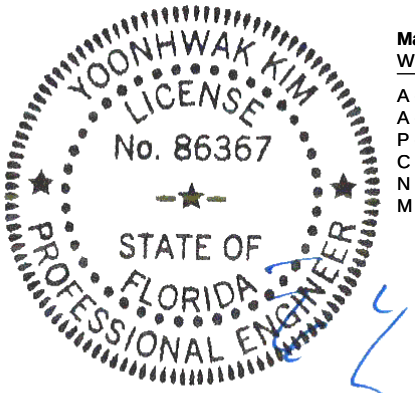

FL REG# 278, Yoonhwak Kim, FL PE #86367
11/03/2020

****WARNING**** READ AND FOLLOW ALL NOTES ON THIS DRAWING!
****IMPORTANT**** FURNISH THIS DRAWING TO ALL CONTRACTORS INCLUDING THE INSTALLERS

Trusses require extreme care in fabricating, handling, shipping, installing and bracing. Refer to and follow the latest edition of BCSI (Building Component Safety Information, by TPI and SBCA) for safety practices prior to performing these functions. Installers shall provide temporary bracing per BCSI. Unless noted otherwise, top chord shall have properly attached structural sheathing and bottom chord shall have a properly attached rigid ceiling. Locations shown for permanent lateral restraint of webs shall have bracing installed per BCSI sections B3, B7, or B10, as applicable. Apply plates to each face of truss and position as shown above and on the Joint Details, unless noted otherwise. Refer to drawings 160A-Z for standard plate positions. Refer to job's General Notes page for additional information.

Alpine, a division of ITW Building Components Group Inc. shall not be responsible for any deviation from this drawing, any failure to build the truss in conformance with ANSI/TPI 1, or for handling, shipping, installation and bracing of trusses. A seal on this drawing or cover page listing this drawing, indicates acceptance of professional engineering responsibility solely for the design shown. The suitability and use of this drawing for any structure is the responsibility of the Building Designer per ANSI/TPI 1 Sec.2.

For more information see these web sites: Alpine: alpineitw.com; TPI: tpinst.org; SBCA: sbcindustry.com; ICC: iccsafe.org; AWC: awc.org

ALPINE AN ITW COMPANY
6750 Forum Drive
Suite 305
Orlando FL, 32821

SEQN: 384472 GABL	Ply: 1	**Job Number:** 20-4738	Cust: R 215 JRef:1X012150003 T11
FROM: CDM	Qty: 1	Patterson	DrwNo: 308.20.0832.53450
Page 1 of 2		**Truss Label:** G03	/ YK 11/03/2020

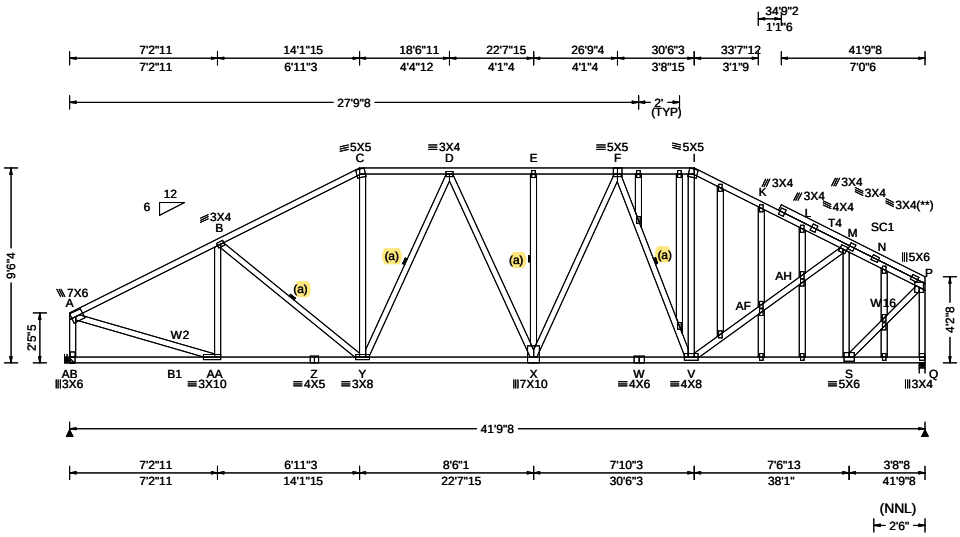

Loading Criteria (psf)

TCLL: 20.00
TCDL: 10.00
BCLL: 0.00
BCDL: 10.00
Des Ld: 40.00
NCBCLL: 10.00
Soffit: 2.00
Load Duration: 1.25
Spacing: 24.0 "

Wind Criteria

Wind Std: ASCE 7-10
Speed: 130 mph
Enclosure: Closed
Risk Category: II
EXP: C Kzt: NA
Mean Height: 15.00 ft
TCDL: 5.0 psf
BCDL: 5.0 psf
MWFRS Parallel Dist: h/2 to h
C&C Dist a: 4.18 ft
Loc. from endwall: not in 10.00 ft
GCpi: 0.18
Wind Duration: 1.60

Snow Criteria (Pg,Pf in PSF)

Pg: NA Ct: NA CAT: NA
Pf: NA Ce: NA
Lu: NA Cs: NA
Snow Duration: NA

Building Code:
FBC 2017 RES
TPI Std: 2014
Rep Fac: Varies by Ld Case
FT/RT:20(0)/10(0)
Plate Type(s):
WAVE

Defl/CSI Criteria

PP Deflection in	loc	L/defl	L/#
VERT(LL): 0.124	U	999	240
VERT(CL): 0.349	U	999	180
HORZ(LL): 0.043	Q	-	-
HORZ(TL): 0.108	Q	-	-

Creep Factor: 2.0
Max TC CSI: 0.896
Max BC CSI: 0.771
Max Web CSI: 0.978

VIEW Ver: 20.01.01A.0724.11

▲ Maximum Reactions (lbs)

Loc	Gravity R+	/ R-	/ Rh	Non-Gravity / Rw	/ U	/ RL
AB	2591	/-	/-	/1135	/67	/259
Q	2681	/-	/-	/1024	/-	/-

Wind reactions based on MWFRS
AB Brg Width = - Min Req = -
Q Brg Width = 3.5 Min Req = 2.2
Bearing Q is a rigid surface.
Members not listed have forces less than 375#

Maximum Top Chord Forces Per Ply (lbs)

Chords	Tens.	Comp.	Chords	Tens.	Comp.
A - B	204	- 3329	I - K	141	- 2899
B - C	179	- 3373	K - L	78	- 2903
C - D	220	- 2863	L - M	79	- 2957
D - E	120	- 3202	M - N	69	- 1951
E - F	120	- 3202	N - P	33	- 2006
F - I	164	- 2560			

Maximum Bot Chord Forces Per Ply (lbs)

Chords	Tens.	Comp.	Chords	Tens.	Comp.
AA- Z	2900	- 263	X - W	2955	0
Z - Y	2900	- 263	W - V	2955	0
Y - X	3156	- 16	V - S	1821	- 26

Maximum Web Forces Per Ply (lbs)

Webs	Tens.	Comp.	Webs	Tens.	Comp.
A -AB	212	- 2557	V - I	641	0
A -AA	2955	- 109	V -AF	891	- 7
AA- B	70	- 784	AF-AH	926	- 1
C - Y	765	- 24	AH- M	927	0
Y - D	0	- 701	M - S	5	- 1393
E - X	0	- 604	S - P	2461	- 39
X - F	610	- 65	P - Q	62	- 2664
F - V	34	- 1115			

Lumber

Top chord: 2x4 SP M-31; T4 2x4 SP #2;
Bot chord: 2x4 SP M-31; B1 2x4 SP #2;
Webs: 2x4 SP #3; W2,W16 2x4 SP #2;
Stack Chord: SC1 2x4 SP #2;

Wind

Wind loads based on MWFRS with additional C&C member design.

End verticals not exposed to wind pressure.

Bracing

(a) Continuous lateral restraint equally spaced on member.

Plating Notes

All plates are 2X4 except as noted.

(**) 1 plate(s) require special positioning. Refer to scaled plate plot details for special positioning requirements.

Hangers / Ties

(J) Hanger Support Required, by others

Loading

Truss designed to support 1-0-0 top chord outlookers and cladding load not to exceed 5.00 PSF one face and 24.0" span opposite face. Top chord must not be cut or notched, unless specified otherwise.

Truss passed check for 20 psf additional bottom chord live load in areas with 42"-high x 24"-wide clearance.

Purlins

In lieu of structural panels use purlins to brace all flat TC @ 24" oc.

YOONHWAK KIM
LICENSE
No. 86367
STATE OF
FLORIDA
PROFESSIONAL ENGINEER

FL REG# 278, Yoonhwak Kim, FL PE #86367
11/03/2020

****WARNING**** READ AND FOLLOW ALL NOTES ON THIS DRAWING!
****IMPORTANT**** FURNISH THIS DRAWING TO ALL CONTRACTORS INCLUDING THE INSTALLERS

Trusses require extreme care in fabricating, handling, shipping, installing and bracing. Refer to and follow the latest edition of BCSI (Building Component Safety Information, by TPI and SBCA) for safety practices prior to performing these functions. Installers shall provide temporary bracing per BCSI. Unless noted otherwise, top chord shall have properly attached structural sheathing and bottom chord shall have a properly attached rigid ceiling. Locations shown for permanent lateral restraint of webs shall have bracing installed per BCSI sections B3, B7, or B10, as applicable. Apply plates to each face of truss and position as shown above and on the Joint Details, unless noted otherwise. Refer to drawings 160A-Z for standard plate positions. Refer to job's General Notes page for additional information.

Alpine, a division of ITW Building Components Group Inc. shall not be responsible for any deviation from this drawing, any failure to build the truss in conformance with ANSI/TPI 1, or for handling, shipping, installation and bracing of trusses. A seal on this drawing or cover page listing this drawing, indicates acceptance of professional engineering responsibility solely for the design shown. The suitability and use of this drawing for any structure is the responsibility of the Building Designer per ANSI/TPI 1 Sec.2.

For more information see these web sites: Alpine: alpineitw.com; TPI: tpinst.org; SBCA: sbcindustry.com; ICC: iccsafe.org; AWC: awc.org

ALPINE AN ITW COMPANY
6750 Forum Drive
Suite 305
Orlando FL, 32821

Additional Notes

See DWGS A14030ENC101014 & GBLLETIN0118 for gable wind bracing and other requirements.

Stacked top chord must NOT be notched or cut in area (NNL). Dropped top chord braced at 24" oc intervals. Attach stacked top chord (SC) to dropped top chord in notchable area using 3x4 tie-plates 24" oc. Center plate on stacked/dropped chord interface, plate length perpendicular to chord length. Splice top chord in notchable area using 3x6.

The overall height of this truss excluding overhang is 9-6-4.

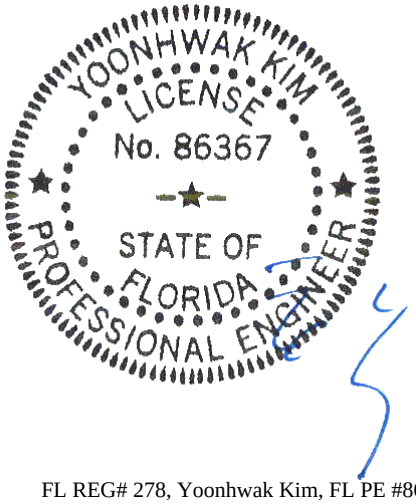

FL REG# 278, Yoonhwak Kim, FL PE #86367
11/03/2020

****WARNING**** READ AND FOLLOW ALL NOTES ON THIS DRAWING!
****IMPORTANT**** FURNISH THIS DRAWING TO ALL CONTRACTORS INCLUDING THE INSTALLERS

Trusses require extreme care in fabricating, handling, shipping, installing and bracing. Refer to and follow the latest edition of BCSI (Building Component Safety Information, by TPI and SBCA) for safety practices prior to performing these functions. Installers shall provide temporary bracing per BCSI. Unless noted otherwise, top chord shall have properly attached structural sheathing and bottom chord shall have a properly attached rigid ceiling. Locations shown for permanent lateral restraint of webs shall have bracing installed per BCSI sections B3, B7, or B10, as applicable. Apply plates to each face of truss and position as shown above and on the Joint Details, unless noted otherwise. Refer to drawings 160A-Z for standard plate positions. Refer to job's General Notes page for additional information.

Alpine, a division of ITW Building Components Group Inc. shall not be responsible for any deviation from this drawing, any failure to build the truss in conformance with ANSI/TPI 1, or for handling, shipping, installation and bracing of trusses. A seal on this drawing or cover page listing this drawing, indicates acceptance of professional engineering responsibility solely for the design shown. The suitability and use of this drawing for any structure is the responsibility of the Building Designer per ANSI/TPI 1 Sec.2.

For more information see these web sites: Alpine: alpineitw.com; TPI: tpinst.org; SBCA: sbcindustry.com; ICC: iccsafe.org; AWC: awc.org

ALPINE AN ITW COMPANY
6750 Forum Drive
Suite 305
Orlando FL, 32821

SEQN: 384462 COMN	Ply: 1	**Job Number:** 20-4738	Cust: R 215 JRef:1X012150003 T35
FROM: CDM	Qty: 5	Patterson	DrwNo: 308.20.0832.55620
Page 1 of 2		**Truss Label:** H01	/ YK 11/03/2020

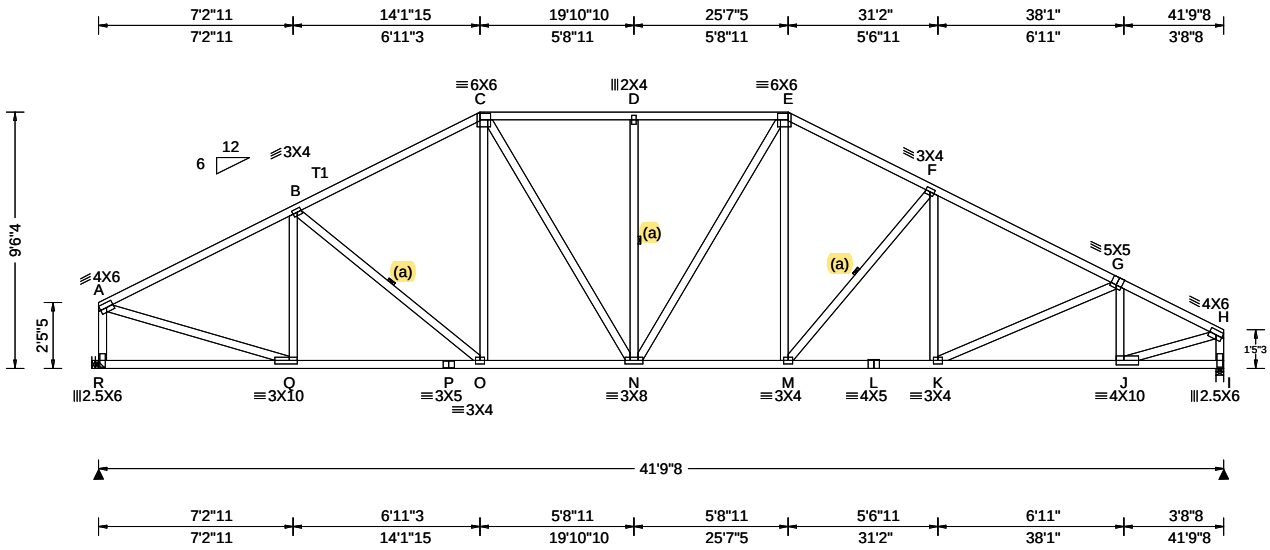

Loading Criteria (psf)

TCLL: 20.00
TCDL: 10.00
BCLL: 0.00
BCDL: 10.00
Des Ld: 40.00
NCBCLL: 10.00
Soffit: 2.00
Load Duration: 1.25
Spacing: 24.0 "

Wind Criteria

Wind Std: ASCE 7-10
Speed: 130 mph
Enclosure: Closed
Risk Category: II
EXP: C Kzt: NA
Mean Height: 15.00 ft
TCDL: 5.0 psf
BCDL: 5.0 psf
MWFRS Parallel Dist: 0 to h/2
C&C Dist a: 4.18 ft
Loc. from endwall: Any
GCpi: 0.18
Wind Duration: 1.60

Snow Criteria (Pg,Pf in PSF)

Pg: NA Ct: NA CAT: NA
Pf: NA Ce: NA
Lu: NA Cs: NA
Snow Duration: NA

Building Code:
FBC 2017 RES
TPI Std: 2014
Rep Fac: Yes
FT/RT:20(0)/10(0)
Plate Type(s):
WAVE

Defl/CSI Criteria

PP Deflection in	loc	L/defl	L/#
VERT(LL): 0.152	D	999	240
VERT(CL): 0.281	D	999	180
HORZ(LL): 0.062	I	-	-
HORZ(TL): 0.114	I	-	-

Creep Factor: 2.0
Max TC CSI: 0.774
Max BC CSI: 0.806
Max Web CSI: 0.893

VIEW Ver: 20.01.01A.0724.11

▲ Maximum Reactions (lbs)

Loc	Gravity R+	Gravity / R-	Gravity / Rh	Non-Gravity / Rw	Non-Gravity / U	Non-Gravity / RL
R	1945	/-	/-	/986	/304	/212
I	1916	/-	/-	/1016	/301	/-

Wind reactions based on MWFRS
R Brg Width = - Min Req = -
I Brg Width = 3.5 Min Req = 2.3
Bearing I is a rigid surface.
Members not listed have forces less than 375#

Maximum Top Chord Forces Per Ply (lbs)

Chords	Tens.	Comp.	Chords	Tens.	Comp.
A - B	936	- 2468	E - F	1078	- 2520
B - C	1006	- 2418	F - G	1112	- 2868
C - D	1041	- 2295	G - H	1004	- 2561
D - E	1041	- 2295			

Maximum Bot Chord Forces Per Ply (lbs)

Chords	Tens.	Comp.	Chords	Tens.	Comp.
Q - P	2147	- 705	M - L	2478	- 820
P - O	2147	- 705	L - K	2478	- 820
O - N	2067	- 572	K - J	2301	- 853
N - M	2179	- 619			

Maximum Web Forces Per Ply (lbs)

Webs	Tens.	Comp.	Webs	Tens.	Comp.
A - R	797	- 1888	M - F	319	- 473
A - Q	2192	- 760	G - J	273	- 573
Q - B	265	- 406	J - H	2343	- 856
C - N	431	- 177	H - I	782	- 1887
E - M	587	- 230			

Lumber

Top chord: 2x4 SP #2; T1 2x4 SP M-31;
Bot chord: 2x4 SP #2;
Webs: 2x4 SP #3;

Bracing

(a) Continuous lateral restraint equally spaced on member.

Hangers / Ties

Simpson Construction Hardware is specified based on the most current information provided by Simpson Strong-Tie. Please refer to the most recent Simpson Strong-Tie catalog for additional information.

Recommended hanger connections are based on manufacturer tested capacities and calculations. Conditions may exist that require different connections than indicated. Refer to manufacturer publication for additional information.

Hanger specified assumes connection to supporting chord is located a minimum of five times the depth of the supporting chord from any unsupported end, unless unsupported chord end has 85% plating coverage.

Bearing at location x=0' uses the following support conditions: 0'
Bearing R (0', 9') HUS26
Supporting Member: (2)2x8 SP 2400f-2.0E
(14) 0.148"x3" nails into supporting member,
(4) 0.148"x3" nails into supported member.

Loading

Truss passed check for 20 psf additional bottom chord live load in areas with 42"-high x 24"-wide clearance.

Purlins

In lieu of structural panels use purlins to brace all flat TC @ 24" oc.

Wind

Wind loads based on MWFRS with additional C&C member design.

End verticals not exposed to wind pressure.

YOONHWAK KIM LICENSE No. 86367 STATE OF FLORIDA PROFESSIONAL ENGINEER

FL REG# 278, Yoonhwak Kim, FL PE #86367
11/03/2020

****WARNING**** READ AND FOLLOW ALL NOTES ON THIS DRAWING!
****IMPORTANT**** FURNISH THIS DRAWING TO ALL CONTRACTORS INCLUDING THE INSTALLERS

Trusses require extreme care in fabricating, handling, shipping, installing and bracing. Refer to and follow the latest edition of BCSI (Building Component Safety Information, by TPI and SBCA) for safety practices prior to performing these functions. Installers shall provide temporary bracing per BCSI. Unless noted otherwise, top chord shall have properly attached structural sheathing and bottom chord shall have a properly attached rigid ceiling. Locations shown for permanent lateral restraint of webs shall have bracing installed per BCSI sections B3, B7, or B10, as applicable. Apply plates to each face of truss and position as shown above and on the Joint Details, unless noted otherwise. Refer to drawings 160A-Z for standard plate positions. Refer to job's General Notes page for additional information.

Alpine, a division of ITW Building Components Group Inc. shall not be responsible for any deviation from this drawing, any failure to build the truss in conformance with ANSI/TPI 1, or for handling, shipping, installation and bracing of trusses. A seal on this drawing or cover page listing this drawing, indicates acceptance of professional engineering responsibility solely for the design shown. The suitability and use of this drawing for any structure is the responsibility of the Building Designer per ANSI/TPI 1 Sec.2.

For more information see these web sites: Alpine: alpineitw.com; TPI: tpinst.org; SBCA: sbcindustry.com; ICC: iccsafe.org; AWC: awc.org

ALPINE AN ITW COMPANY
6750 Forum Drive
Suite 305
Orlando FL, 32821

Additional Notes

The overall height of this truss excluding overhang is 9-6-4.

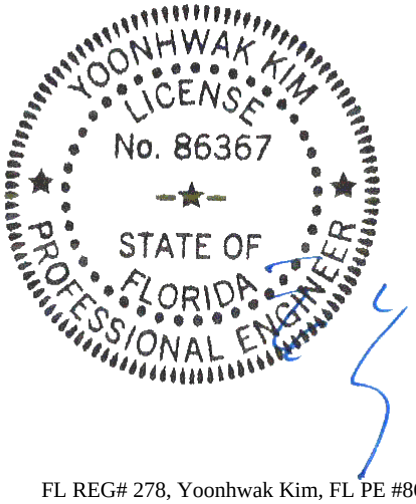

FL REG# 278, Yoonhwak Kim, FL PE #86367
11/03/2020

****WARNING**** READ AND FOLLOW ALL NOTES ON THIS DRAWING!
****IMPORTANT**** FURNISH THIS DRAWING TO ALL CONTRACTORS INCLUDING THE INSTALLERS

Trusses require extreme care in fabricating, handling, shipping, installing and bracing. Refer to and follow the latest edition of BCSI (Building Component Safety Information, by TPI and SBCA) for safety practices prior to performing these functions. Installers shall provide temporary bracing per BCSI. Unless noted otherwise, top chord shall have properly attached structural sheathing and bottom chord shall have a properly attached rigid ceiling. Locations shown for permanent lateral restraint of webs shall have bracing installed per BCSI sections B3, B7, or B10, as applicable. Apply plates to each face of truss and position as shown above and on the Joint Details, unless noted otherwise. Refer to drawings 160A-Z for standard plate positions. Refer to job's General Notes page for additional information.

Alpine, a division of ITW Building Components Group Inc. shall not be responsible for any deviation from this drawing, any failure to build the truss in conformance with ANSI/TPI 1, or for handling, shipping, installation and bracing of trusses. A seal on this drawing or cover page listing this drawing, indicates acceptance of professional engineering responsibility solely for the design shown. The suitability and use of this drawing for any structure is the responsibility of the Building Designer per ANSI/TPI 1 Sec.2.

For more information see these web sites: Alpine: alpineitw.com; TPI: tpinst.org; SBCA: sbcindustry.com; ICC: iccsafe.org; AWC: awc.org

ALPINE
AN ITW COMPANY
6750 Forum Drive
Suite 305
Orlando FL, 32821

SEQN: 384479 GABL	Ply: 1	**Job Number:** 20-4738	Cust: R 215 JRef:1X012150003 T33
FROM: CDM	Qty: 1	Patterson	DrwNo: 308.20.0832.57180
		Truss Label: H02	/ YK 11/03/2020

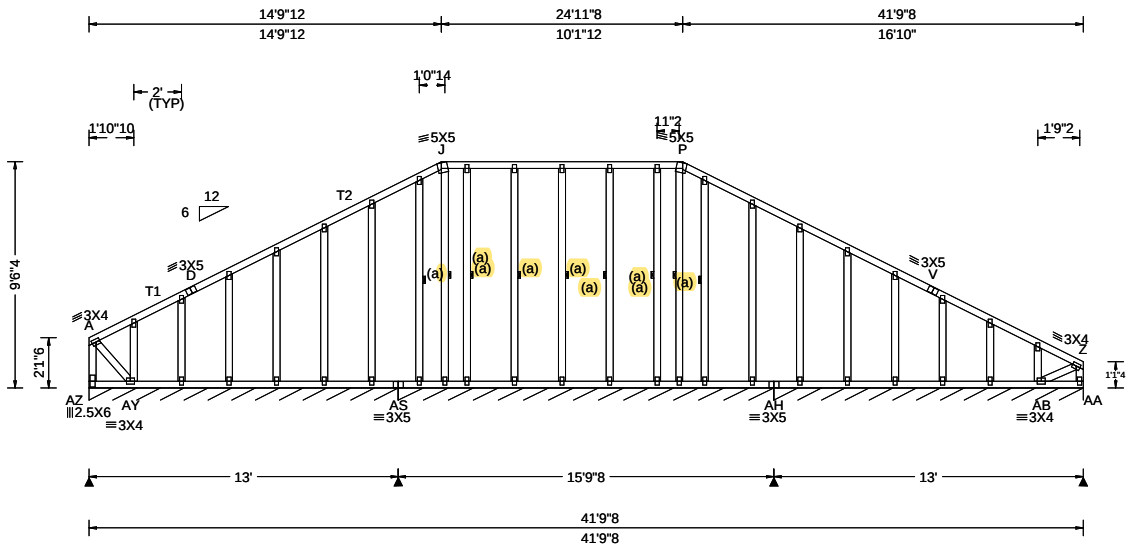

Loading Criteria (psf)	**Wind Criteria**	**Snow Criteria** (Pg,Pf in PSF)	**Defl/CSI Criteria**
TCLL: 20.00	Wind Std: ASCE 7-10	Pg: NA Ct: NA CAT: NA	PP Deflection in loc L/defl L/#
TCDL: 10.00	Speed: 130 mph	Pf: NA Ce: NA	VERT(LL): 0.002 N 999 240
BCLL: 0.00	Enclosure: Closed	Lu: NA Cs: NA	VERT(CL): 0.005 N 999 180
BCDL: 10.00	Risk Category: II	Snow Duration: NA	HORZ(LL): 0.006 S - -
Des Ld: 40.00	EXP: C Kzt: NA		HORZ(TL): 0.008 S - -
NCBCLL: 10.00	Mean Height: 15.00 ft	Building Code:	Creep Factor: 2.0
Soffit: 2.00	TCDL: 5.0 psf	FBC 2017 RES	Max TC CSI: 0.146
Load Duration: 1.25	BCDL: 5.0 psf	TPI Std: 2014	Max BC CSI: 0.051
Spacing: 24.0 "	MWFRS Parallel Dist: 0 to h/2	Rep Fac: No	Max Web CSI: 0.153
	C&C Dist a: 4.18 ft	FT/RT:20(0)/10(0)	
	Loc. from endwall: Any	Plate Type(s):	
	GCpi: 0.18	WAVE	VIEW Ver: 20.01.01A.0724.11
	Wind Duration: 1.60		

▲ Maximum Reactions (lbs), or *=PLF

Loc	Gravity R+	/ R-	/ Rh	Non-Gravity / Rw	/ U	/ RL
AZ*	136	/-	/-	/71	/31	/26
AS*	158	/-	/-	/54	/14	/-
AH*	130	/-	/-	/70	/29	/-

Wind reactions based on MWFRS
AZ Brg Width = 156 Min Req = -
AS Brg Width = 189 Min Req = -
AH Brg Width = 156 Min Req = -
Bearings AZ, AS, & AH are a rigid surface.
Members not listed have forces less than 375#

Maximum Top Chord Forces Per Ply (lbs)

Chords	Tens.	Comp.	Chords	Tens.	Comp.
D - J	475	- 151	P - V	471	- 89
J - P	438	0			

Lumber

Top chord: 2x4 SP #2; T1,T2 2x4 SP M-31;
Bot chord: 2x4 SP #2;
Webs: 2x4 SP #3;

Bracing

(a) Continuous lateral restraint equally spaced on member.

Plating Notes

All plates are 2X4 except as noted.

Loading

Truss designed to support 1-6-0 top chord outlookers and cladding load not to exceed 5.00 PSF one face and 24.0" span opposite face. Top chord must not be cut or notched, unless specified otherwise.

Purlins

In lieu of structural panels use purlins to brace TC @ 24" oc.

Wind

Wind loads based on MWFRS with additional C&C member design.

End verticals not exposed to wind pressure.

Additional Notes

See DWGS A14015ENC101014 & GBLLETIN0118 for gable wind bracing and other requirements.

The overall height of this truss excluding overhang is 9-6-4.

YOONHWAK KIM
LICENSE
No. 86367
STATE OF FLORIDA
PROFESSIONAL ENGINEER

FL REG# 278, Yoonhwak Kim, FL PE #86367
11/03/2020

****WARNING**** READ AND FOLLOW ALL NOTES ON THIS DRAWING!
****IMPORTANT**** FURNISH THIS DRAWING TO ALL CONTRACTORS INCLUDING THE INSTALLERS

Trusses require extreme care in fabricating, handling, shipping, installing and bracing. Refer to and follow the latest edition of BCSI (Building Component Safety Information, by TPI and SBCA) for safety practices prior to performing these functions. Installers shall provide temporary bracing per BCSI. Unless noted otherwise, top chord shall have properly attached structural sheathing and bottom chord shall have a properly attached rigid ceiling. Locations shown for permanent lateral restraint of webs shall have bracing installed per BCSI sections B3, B7, or B10, as applicable. Apply plates to each face of truss and position as shown above and on the Joint Details, unless noted otherwise. Refer to drawings 160A-Z for standard plate positions. Refer to job's General Notes page for additional information.

Alpine, a division of ITW Building Components Group Inc. shall not be responsible for any deviation from this drawing, any failure to build the truss in conformance with ANSI/TPI 1, or for handling, shipping, installation and bracing of trusses. A seal on this drawing or cover page listing this drawing, indicates acceptance of professional engineering responsibility solely for the design shown. The suitability and use of this drawing for any structure is the responsibility of the Building Designer per ANSI/TPI 1 Sec.2.

For more information see these web sites: Alpine: alpineitw.com; TPI: tpinst.org; SBCA: sbcindustry.com; ICC: iccsafe.org; AWC: awc.org

ALPINE AN ITW COMPANY
6750 Forum Drive
Suite 305
Orlando FL, 32821

SEQN: 384573 HIP_ FROM: CDM	Ply: 1 Qty: 1	**Job Number:** 20-4738 Patterson **Truss Label:** HJ1	Cust: R 215 JRef:1X012150003 T5 DrwNo: 308.20.0833.03590 / YK 11/03/2020

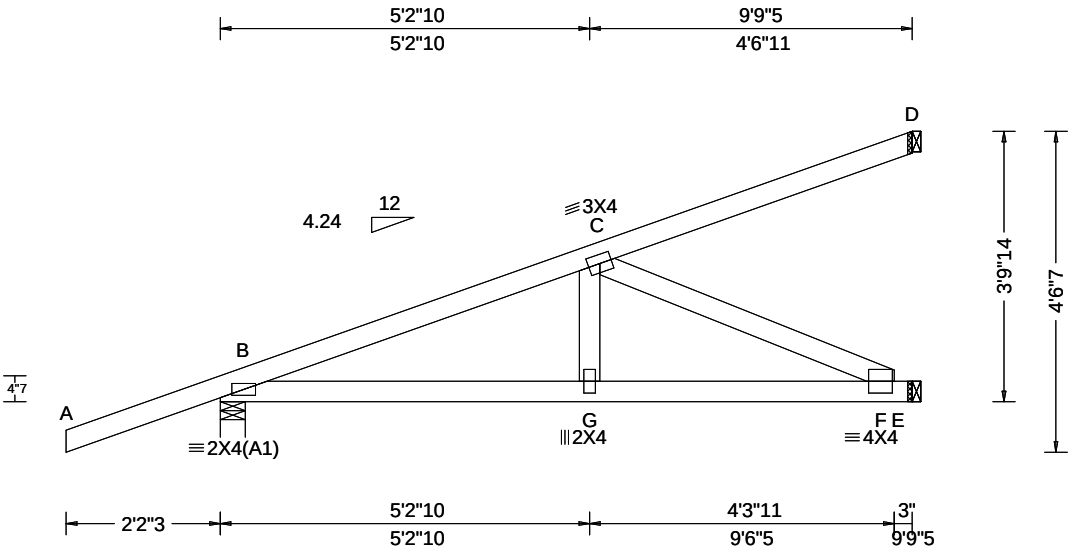

Loading Criteria (psf)

TCLL:	20.00
TCDL:	10.00
BCLL:	0.00
BCDL:	10.00
Des Ld:	40.00
NCBCLL:	10.00
Soffit:	2.00

Load Duration: 1.25
Spacing: 24.0 "

Wind Criteria
Wind Std: ASCE 7-10
Speed: 130 mph
Enclosure: Closed
Risk Category: II
EXP: C Kzt: NA
Mean Height: 15.00 ft
TCDL: 5.0 psf
BCDL: 5.0 psf
MWFRS Parallel Dist: 0 to h/2
C&C Dist a: 3.00 ft
Loc. from endwall: not in 4.50 ft
GCpi: 0.18
Wind Duration: 1.60

Snow Criteria (Pg,Pf in PSF)
Pg: NA Ct: NA CAT: NA
Pf: NA Ce: NA
Lu: NA Cs: NA
Snow Duration: NA

Building Code:
FBC 2017 RES
TPI Std: 2014
Rep Fac: Varies by Ld Case
FT/RT:20(0)/10(0)
Plate Type(s):
WAVE

Defl/CSI Criteria

PP Deflection in	loc	L/defl	L/#
VERT(LL): 0.021	G	999	240
VERT(CL): 0.043	G	999	180
HORZ(LL): 0.005	F	-	-
HORZ(TL): 0.011	F	-	-

Creep Factor: 2.0
Max TC CSI: 0.575
Max BC CSI: 0.642
Max Web CSI: 0.343

VIEW Ver: 20.01.01A.0724.11

▲Maximum Reactions (lbs)

Loc	Gravity R+	/ R-	/ Rh	Non-Gravity / Rw	/ U	/ RL
B	366	/-	/-	/-	/170	/-
E	350	/-	/-	/-	/70	/-
D	74	/-	/-	/-	/20	/-

Wind reactions based on MWFRS
B Brg Width = 4.2 Min Req = 1.5
E Brg Width = 1.5 Min Req = -
D Brg Width = 1.5 Min Req = -
Bearing B is a rigid surface.
Members not listed have forces less than 375#

Maximum Top Chord Forces Per Ply (lbs)

Chords	Tens.	Comp.
B - C	201	- 737

Maximum Bot Chord Forces Per Ply (lbs)

Chords	Tens.	Comp.	Chords	Tens.	Comp.
B - G	691	- 170	G - F	679	- 169

Maximum Web Forces Per Ply (lbs)

Webs	Tens.	Comp.
C - F	187	- 748

Lumber
Top chord: 2x4 SP #2;
Bot chord: 2x4 SP #2;
Webs: 2x4 SP #3;

Special Loads
------(Lumber Dur.Fac.=1.25 / Plate Dur.Fac.=1.25)

TC: From	0 plf at	-2.18 to	61 plf at	0.00
TC: From	2 plf at	0.00 to	2 plf at	9.78
BC: From	0 plf at	-2.18 to	4 plf at	0.00
BC: From	2 plf at	0.00 to	2 plf at	9.78

TC: -15 lb Conc. Load at 1.32
TC: 134 lb Conc. Load at 4.15
TC: 260 lb Conc. Load at 6.98
BC: 16 lb Conc. Load at 1.32
BC: 102 lb Conc. Load at 4.15
BC: 182 lb Conc. Load at 6.98

Wind
Wind loads and reactions based on MWFRS.

Additional Notes
The overall height of this truss excluding overhang is 3-9-14.

Provide (3) 16d common 0.162"x3.5", toe-nails at TC.
Provide (3) 16d common 0.162"x3.5", toe-nails at BC.

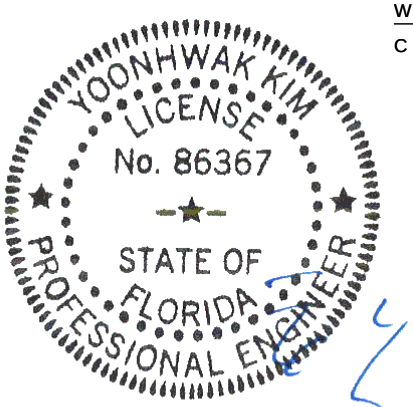

FL REG# 278, Yoonhwak Kim, FL PE #86367
11/03/2020

****WARNING**** READ AND FOLLOW ALL NOTES ON THIS DRAWING!
****IMPORTANT**** FURNISH THIS DRAWING TO ALL CONTRACTORS INCLUDING THE INSTALLERS

Trusses require extreme care in fabricating, handling, shipping, installing and bracing. Refer to and follow the latest edition of BCSI (Building Component Safety Information, by TPI and SBCA) for safety practices prior to performing these functions. Installers shall provide temporary bracing per BCSI. Unless noted otherwise, top chord shall have properly attached structural sheathing and bottom chord shall have a properly attached rigid ceiling. Locations shown for permanent lateral restraint of webs shall have bracing installed per BCSI sections B3, B7, or B10, as applicable. Apply plates to each face of truss and position as shown above and on the Joint Details, unless noted otherwise. Refer to drawings 160A-Z for standard plate positions. Refer to job's General Notes page for additional information.

Alpine, a division of ITW Building Components Group Inc. shall not be responsible for any deviation from this drawing, any failure to build the truss in conformance with ANSI/TPI 1, or for handling, shipping, installation and bracing of trusses. A seal on this drawing or cover page listing this drawing, indicates acceptance of professional engineering responsibility solely for the design shown. The suitability and use of this drawing for any structure is the responsibility of the Building Designer per ANSI/TPI 1 Sec.2.

For more information see these web sites: Alpine: alpineitw.com; TPI: tpinst.org; SBCA: sbcindustry.com; ICC: iccsafe.org; AWC: awc.org

ALPINE AN ITW COMPANY
6750 Forum Drive
Suite 305
Orlando FL, 32821

SEQN: 384574 HIP_ FROM: CDM	Ply: 1 Qty: 1	**Job Number:** 20-4738 Patterson **Truss Label:** HJ2	Cust: R 215 JRef:1X012150003 T12 DrwNo: 308.20.0833.09000 / YK 11/03/2020

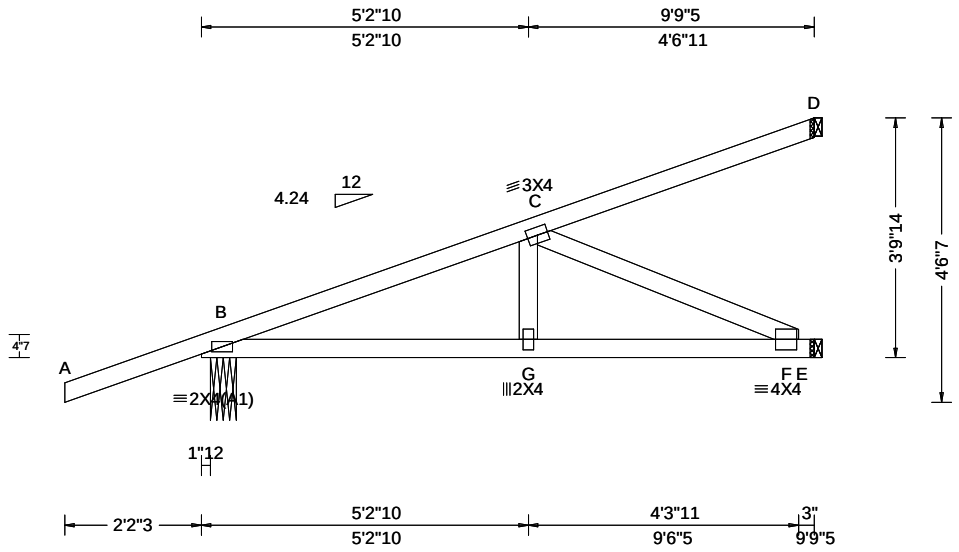

Loading Criteria (psf)

TCLL: 20.00
TCDL: 10.00
BCLL: 0.00
BCDL: 10.00
Des Ld: 40.00
NCBCLL: 10.00
Soffit: 2.00
Load Duration: 1.25
Spacing: 24.0 "

Wind Criteria

Wind Std: ASCE 7-10
Speed: 130 mph
Enclosure: Closed
Risk Category: II
EXP: C Kzt: NA
Mean Height: 15.00 ft
TCDL: 5.0 psf
BCDL: 5.0 psf
MWFRS Parallel Dist: 0 to h/2
C&C Dist a: 3.00 ft
Loc. from endwall: not in 4.50 ft
GCpi: 0.18
Wind Duration: 1.60

Snow Criteria (Pg,Pf in PSF)

Pg: NA Ct: NA CAT: NA
Pf: NA Ce: NA
Lu: NA Cs: NA
Snow Duration: NA

Building Code:
FBC 2017 RES
TPI Std: 2014
Rep Fac: Varies by Ld Case
FT/RT:20(0)/10(0)
Plate Type(s):
WAVE

Defl/CSI Criteria

PP Deflection in	loc	L/defl	L/#
VERT(LL): 0.021	G	999	240
VERT(CL): 0.042	G	999	180
HORZ(LL): 0.005	F	-	-
HORZ(TL): 0.010	F	-	-

Creep Factor: 2.0
Max TC CSI: 0.572
Max BC CSI: 0.624
Max Web CSI: 0.318

VIEW Ver: 20.01.01A.0724.11

▲Maximum Reactions (lbs)

Loc	Gravity R+	/ R-	/ Rh	Non-Gravity / Rw	/ U	/ RL
B	366	/-	/-	/-	/220	/-
E	328	/-	/-	/-	/78	/-
D	74	/-	/-	/-	/17	/-

Wind reactions based on MWFRS
B Brg Width = 4.9 Min Req = 1.5
E Brg Width = 1.5 Min Req = -
D Brg Width = 1.5 Min Req = -
Bearing B is a rigid surface.
Members not listed have forces less than 375#

Maximum Top Chord Forces Per Ply (lbs)

Chords	Tens.	Comp.
B - C	241	- 677

Maximum Bot Chord Forces Per Ply (lbs)

Chords	Tens.	Comp.	Chords	Tens.	Comp.
B - G	642	- 195	G - F	630	- 194

Maximum Web Forces Per Ply (lbs)

Webs	Tens.	Comp.
C - F	213	- 694

Lumber

Top chord: 2x4 SP #2;
Bot chord: 2x4 SP #2;
Webs: 2x4 SP #3;

Special Loads

------(Lumber Dur.Fac.=1.25 / Plate Dur.Fac.=1.25)

TC: From	0 plf at	-2.18 to	61 plf at	0.00
TC: From	2 plf at	0.00 to	2 plf at	9.78
BC: From	0 plf at	-2.18 to	4 plf at	0.00
BC: From	2 plf at	0.00 to	2 plf at	9.78

TC: -42 lb Conc. Load at 1.32
TC: 120 lb Conc. Load at 4.15
TC: 252 lb Conc. Load at 6.98
BC: 7 lb Conc. Load at 1.32
BC: 96 lb Conc. Load at 4.15
BC: 177 lb Conc. Load at 6.98

Wind

Wind loads and reactions based on MWFRS.

Left cantilever is exposed to wind

Additional Notes

The overall height of this truss excluding overhang is 3-9-14.

Provide (3) 16d common 0.162"x3.5", toe-nails at TC.
Provide (3) 16d common 0.162"x3.5", toe-nails at BC.

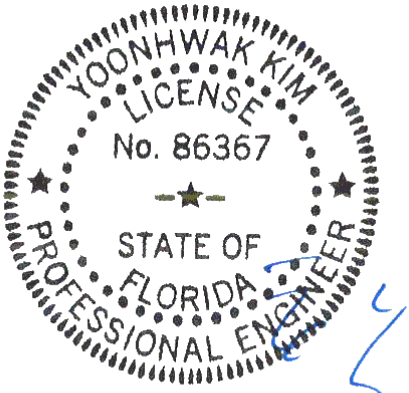

FL REG# 278, Yoonhwak Kim, FL PE #86367
11/03/2020

****WARNING**** READ AND FOLLOW ALL NOTES ON THIS DRAWING!
****IMPORTANT**** FURNISH THIS DRAWING TO ALL CONTRACTORS INCLUDING THE INSTALLERS

Trusses require extreme care in fabricating, handling, shipping, installing and bracing. Refer to and follow the latest edition of BCSI (Building Component Safety Information, by TPI and SBCA) for safety practices prior to performing these functions. Installers shall provide temporary bracing per BCSI. Unless noted otherwise, top chord shall have properly attached structural sheathing and bottom chord shall have a properly attached rigid ceiling. Locations shown for permanent lateral restraint of webs shall have bracing installed per BCSI sections B3, B7, or B10, as applicable. Apply plates to each face of truss and position as shown above and on the Joint Details, unless noted otherwise. Refer to drawings 160A-Z for standard plate positions. Refer to job's General Notes page for additional information.

Alpine, a division of ITW Building Components Group Inc. shall not be responsible for any deviation from this drawing, any failure to build the truss in conformance with ANSI/TPI 1, or for handling, shipping, installation and bracing of trusses. A seal on this drawing or cover page listing this drawing, indicates acceptance of professional engineering responsibility solely for the design shown. The suitability and use of this drawing for any structure is the responsibility of the Building Designer per ANSI/TPI 1 Sec.2.

For more information see these web sites: Alpine: alpineitw.com; TPI: tpinst.org; SBCA: sbcindustry.com; ICC: iccsafe.org; AWC: awc.org

ALPINE AN ITW COMPANY
6750 Forum Drive
Suite 305
Orlando FL, 32821

SEQN: 384560 JACK FROM: CDM	Ply: 1 Qty: 2	**Job Number:** 20-4738 Patterson **Truss Label:** J01	Cust: R 215 JRef:1X012150003 T15 DrwNo: 308.20.0833.10413 / YK 11/03/2020

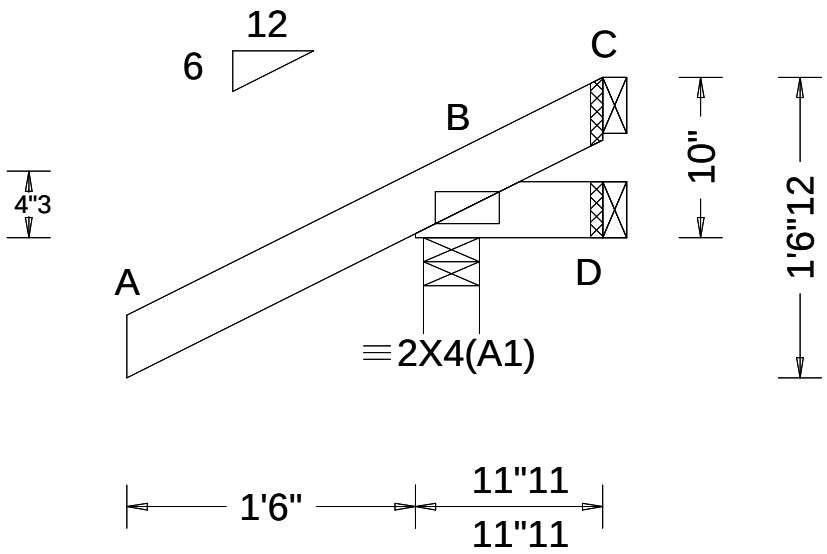

Loading Criteria (psf)	**Wind Criteria**	**Snow Criteria** (Pg,Pf in PSF)	**Defl/CSI Criteria**
TCLL: 20.00 TCDL: 10.00 BCLL: 0.00 BCDL: 10.00 Des Ld: 40.00 NCBCLL: 10.00 Soffit: 2.00 Load Duration: 1.25 Spacing: 24.0 "	Wind Std: ASCE 7-10 Speed: 130 mph Enclosure: Closed Risk Category: II EXP: C Kzt: NA Mean Height: 15.00 ft TCDL: 5.0 psf BCDL: 5.0 psf MWFRS Parallel Dist: 0 to h/2 C&C Dist a: 3.00 ft Loc. from endwall: Any GCpi: 0.18 Wind Duration: 1.60	Pg: NA Ct: NA CAT: NA Pf: NA Ce: NA Lu: NA Cs: NA Snow Duration: NA Building Code: FBC 2017 RES TPI Std: 2014 Rep Fac: Yes FT/RT:20(0)/10(0) Plate Type(s): WAVE	PP Deflection in loc L/defl L/# VERT(LL): NA VERT(CL): NA HORZ(LL): -0.000 D - - HORZ(TL): 0.000 D - - Creep Factor: 2.0 Max TC CSI: 0.321 Max BC CSI: 0.030 Max Web CSI: 0.000 VIEW Ver: 20.01.01A.0724.11

▲Maximum Reactions (lbs)

	Gravity			Non-Gravity		
Loc	R+	/ R-	/ Rh	/ Rw	/ U	/ RL
B	214	/-	/-	/183	/64	/35
D	8	/-11	/-	/17	/16	/-
C	-	/-30	/-	/25	/38	/-

Wind reactions based on MWFRS
B Brg Width = 3.5 Min Req = 1.5
D Brg Width = 1.5 Min Req = -
C Brg Width = 1.5 Min Req = -
Bearing B is a rigid surface.
Members not listed have forces less than 375#

Lumber

Top chord: 2x4 SP #2;
Bot chord: 2x4 SP #2;

Wind

Wind loads based on MWFRS with additional C&C member design.

Additional Notes

The overall height of this truss excluding overhang is 0-10-0.

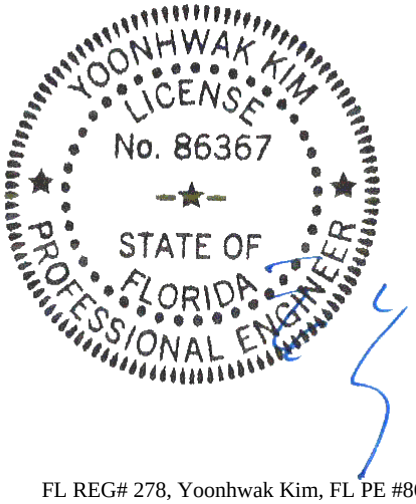

FL REG# 278, Yoonhwak Kim, FL PE #86367
11/03/2020

****WARNING**** READ AND FOLLOW ALL NOTES ON THIS DRAWING!
****IMPORTANT**** FURNISH THIS DRAWING TO ALL CONTRACTORS INCLUDING THE INSTALLERS

Trusses require extreme care in fabricating, handling, shipping, installing and bracing. Refer to and follow the latest edition of BCSI (Building Component Safety Information, by TPI and SBCA) for safety practices prior to performing these functions. Installers shall provide temporary bracing per BCSI. Unless noted otherwise, top chord shall have properly attached structural sheathing and bottom chord shall have a properly attached rigid ceiling. Locations shown for permanent lateral restraint of webs shall have bracing installed per BCSI sections B3, B7, or B10, as applicable. Apply plates to each face of truss and position as shown above and on the Joint Details, unless noted otherwise. Refer to drawings 160A-Z for standard plate positions. Refer to job's General Notes page for additional information.

Alpine, a division of ITW Building Components Group Inc. shall not be responsible for any deviation from this drawing, any failure to build the truss in conformance with ANSI/TPI 1, or for handling, shipping, installation and bracing of trusses. A seal on this drawing or cover page listing this drawing, indicates acceptance of professional engineering responsibility solely for the design shown. The suitability and use of this drawing for any structure is the responsibility of the Building Designer per ANSI/TPI 1 Sec.2.

For more information see these web sites: Alpine: alpineitw.com; TPI: tpinst.org; SBCA: sbcindustry.com; ICC: iccsafe.org; AWC: awc.org

ALPINE AN ITW COMPANY
6750 Forum Drive
Suite 305
Orlando FL, 32821

SEQN: 384561 JACK FROM: CDM	Ply: 1 Qty: 2	**Job Number:** 20-4738 Patterson **Truss Label:** J03	Cust: R 215 JRef:1X012150003 T14 DrwNo: 308.20.0833.11240 / YK 11/03/2020

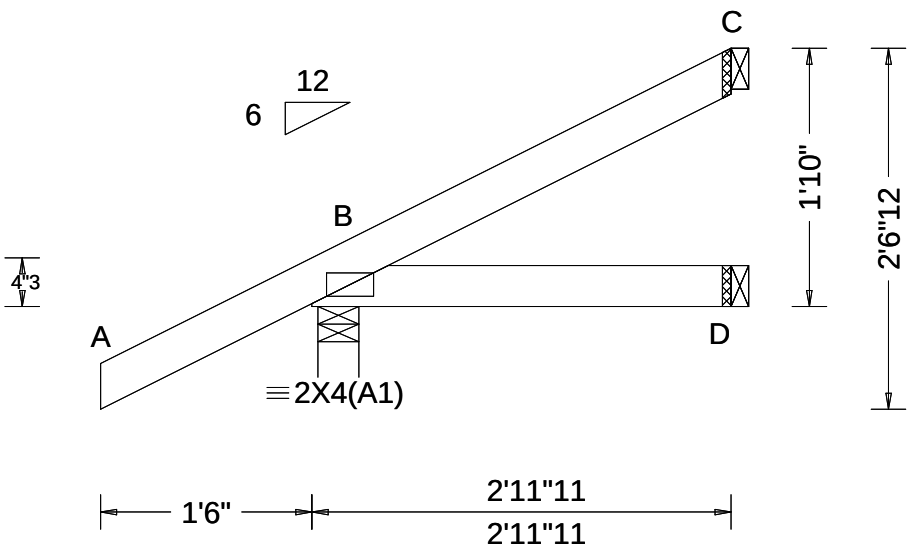

Loading Criteria (psf)
TCLL: 20.00
TCDL: 10.00
BCLL: 0.00
BCDL: 10.00
Des Ld: 40.00
NCBCLL: 10.00
Soffit: 2.00
Load Duration: 1.25
Spacing: 24.0 "

Wind Criteria
Wind Std: ASCE 7-10
Speed: 130 mph
Enclosure: Closed
Risk Category: II
EXP: C Kzt: NA
Mean Height: 15.00 ft
TCDL: 5.0 psf
BCDL: 5.0 psf
MWFRS Parallel Dist: 0 to h/2
C&C Dist a: 3.00 ft
Loc. from endwall: not in 4.50 ft
GCpi: 0.18
Wind Duration: 1.60

Snow Criteria (Pg,Pf in PSF)
Pg: NA Ct: NA CAT: NA
Pf: NA Ce: NA
Lu: NA Cs: NA
Snow Duration: NA

Building Code:
FBC 2017 RES
TPI Std: 2014
Rep Fac: Yes
FT/RT:20(0)/10(0)
Plate Type(s):
WAVE

Defl/CSI Criteria
PP Deflection in loc L/defl L/#
VERT(LL): NA
VERT(CL): NA
HORZ(LL): 0.001 D - -
HORZ(TL): 0.001 D - -
Creep Factor: 2.0
Max TC CSI: 0.196
Max BC CSI: 0.080
Max Web CSI: 0.000

VIEW Ver: 20.01.01A.0724.11

▲Maximum Reactions (lbs)

	Gravity			Non-Gravity		
Loc	R+	/ R-	/ Rh	/ Rw	/ U	/ RL
B	252	/-	/-	/185	/43	/63
D	51	/-	/-	/39	/0	/-
C	67	/-	/-	/30	/26	/-

Wind reactions based on MWFRS
B Brg Width = 3.5 Min Req = 1.5
D Brg Width = 1.5 Min Req = -
C Brg Width = 1.5 Min Req = -
Bearing B is a rigid surface.
Members not listed have forces less than 375#

Lumber
Top chord: 2x4 SP #2;
Bot chord: 2x4 SP #2;

Wind
Wind loads based on MWFRS with additional C&C member design.

Additional Notes
The overall height of this truss excluding overhang is 1-10-0.

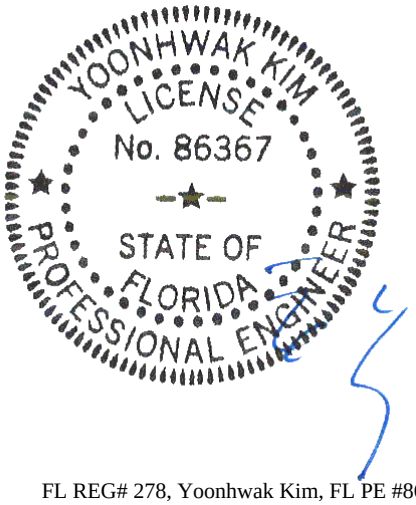

FL REG# 278, Yoonhwak Kim, FL PE #86367
11/03/2020

****WARNING**** READ AND FOLLOW ALL NOTES ON THIS DRAWING!
****IMPORTANT**** FURNISH THIS DRAWING TO ALL CONTRACTORS INCLUDING THE INSTALLERS

Trusses require extreme care in fabricating, handling, shipping, installing and bracing. Refer to and follow the latest edition of BCSI (Building Component Safety Information, by TPI and SBCA) for safety practices prior to performing these functions. Installers shall provide temporary bracing per BCSI. Unless noted otherwise, top chord shall have properly attached structural sheathing and bottom chord shall have a properly attached rigid ceiling. Locations shown for permanent lateral restraint of webs shall have bracing installed per BCSI sections B3, B7, or B10, as applicable. Apply plates to each face of truss and position as shown above and on the Joint Details, unless noted otherwise. Refer to drawings 160A-Z for standard plate positions. Refer to job's General Notes page for additional information.

Alpine, a division of ITW Building Components Group Inc. shall not be responsible for any deviation from this drawing, any failure to build the truss in conformance with ANSI/TPI 1, or for handling, shipping, installation and bracing of trusses. A seal on this drawing or cover page listing this drawing, indicates acceptance of professional engineering responsibility solely for the design shown. The suitability and use of this drawing for any structure is the responsibility of the Building Designer per ANSI/TPI 1 Sec.2.

For more information see these web sites: Alpine: alpineitw.com; TPI: tpinst.org; SBCA: sbcindustry.com; ICC: iccsafe.org; AWC: awc.org

ALPINE AN ITW COMPANY
6750 Forum Drive
Suite 305
Orlando FL, 32821

SEQN: 384562 JACK FROM: CDM	Ply: 1 Qty: 2	**Job Number:** 20-4738 Patterson **Truss Label:** J05	Cust: R 215 JRef:1X012150003 T13 DrwNo: 308.20.0833.12257 / YK 11/03/2020

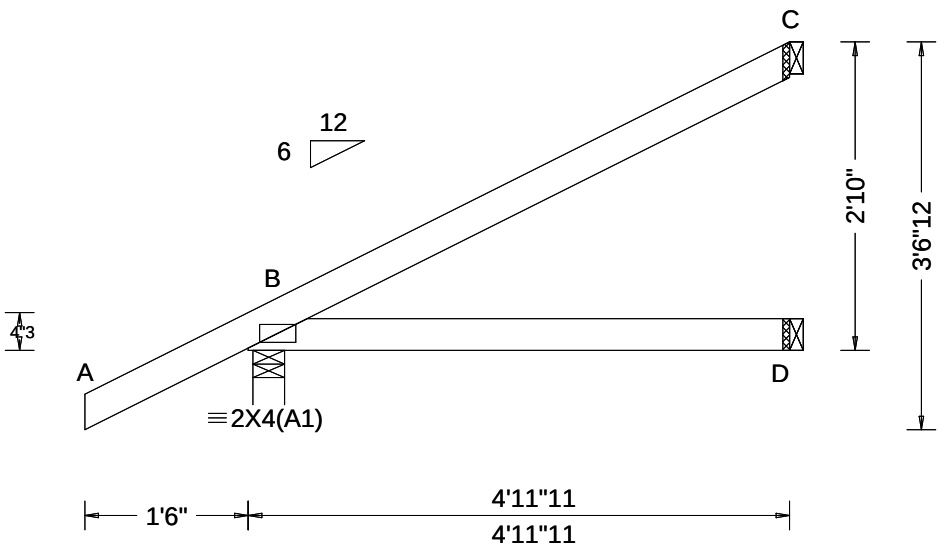

Loading Criteria (psf)

TCLL:	20.00
TCDL:	10.00
BCLL:	0.00
BCDL:	10.00
Des Ld:	40.00
NCBCLL:	10.00
Soffit:	2.00

Load Duration: 1.25
Spacing: 24.0 "

Wind Criteria
Wind Std: ASCE 7-10
Speed: 130 mph
Enclosure: Closed
Risk Category: II
EXP: C Kzt: NA
Mean Height: 15.00 ft
TCDL: 5.0 psf
BCDL: 5.0 psf
MWFRS Parallel Dist: 0 to h/2
C&C Dist a: 3.00 ft
Loc. from endwall: not in 4.50 ft
GCpi: 0.18
Wind Duration: 1.60

Snow Criteria (Pg,Pf in PSF)
Pg: NA Ct: NA CAT: NA
Pf: NA Ce: NA
Lu: NA Cs: NA
Snow Duration: NA

Building Code:
FBC 2017 RES
TPI Std: 2014
Rep Fac: Yes
FT/RT:20(0)/10(0)
Plate Type(s):
WAVE

Defl/CSI Criteria
PP Deflection in loc L/defl L/#
VERT(LL): NA
VERT(CL): NA
HORZ(LL): 0.005 D - -
HORZ(TL): 0.010 D - -
Creep Factor: 2.0
Max TC CSI: 0.336
Max BC CSI: 0.256
Max Web CSI: 0.000

VIEW Ver: 20.01.01A.0724.11

▲Maximum Reactions (lbs)

	Gravity			Non-Gravity		
Loc	R+	/ R-	/ Rh	/ Rw	/ U	/ RL
B	323	/-	/-	/230	/46	/92
D	91	/-	/-	/63	/-	/-
C	130	/-	/-	/65	/49	/-

Wind reactions based on MWFRS
B Brg Width = 3.5 Min Req = 1.5
D Brg Width = 1.5 Min Req = -
C Brg Width = 1.5 Min Req = -
Bearing B is a rigid surface.
Members not listed have forces less than 375#

Lumber
Top chord: 2x4 SP #2;
Bot chord: 2x4 SP #2;

Wind
Wind loads based on MWFRS with additional C&C member design.

Additional Notes
The overall height of this truss excluding overhang is 2-10-0.

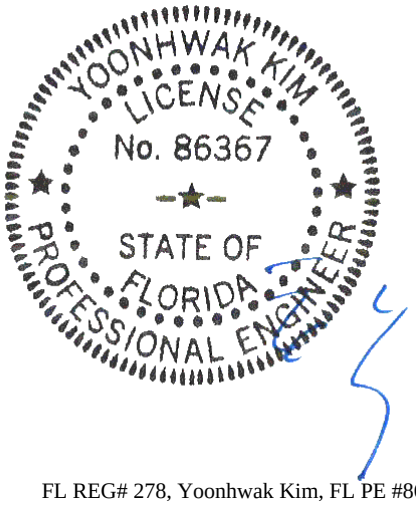

FL REG# 278, Yoonhwak Kim, FL PE #86367
11/03/2020

****WARNING**** READ AND FOLLOW ALL NOTES ON THIS DRAWING!
****IMPORTANT**** FURNISH THIS DRAWING TO ALL CONTRACTORS INCLUDING THE INSTALLERS

Trusses require extreme care in fabricating, handling, shipping, installing and bracing. Refer to and follow the latest edition of BCSI (Building Component Safety Information, by TPI and SBCA) for safety practices prior to performing these functions. Installers shall provide temporary bracing per BCSI. Unless noted otherwise, top chord shall have properly attached structural sheathing and bottom chord shall have a properly attached rigid ceiling. Locations shown for permanent lateral restraint of webs shall have bracing installed per BCSI sections B3, B7, or B10, as applicable. Apply plates to each face of truss and position as shown above and on the Joint Details, unless noted otherwise. Refer to drawings 160A-Z for standard plate positions. Refer to job's General Notes page for additional information.

Alpine, a division of ITW Building Components Group Inc. shall not be responsible for any deviation from this drawing, any failure to build the truss in conformance with ANSI/TPI 1, or for handling, shipping, installation and bracing of trusses. A seal on this drawing or cover page listing this drawing, indicates acceptance of professional engineering responsibility solely for the design shown. The suitability and use of this drawing for any structure is the responsibility of the Building Designer per ANSI/TPI 1 Sec.2.

For more information see these web sites: Alpine: alpineitw.com; TPI: tpinst.org; SBCA: sbcindustry.com; ICC: iccsafe.org; AWC: awc.org

ALPINE AN ITW COMPANY
6750 Forum Drive
Suite 305
Orlando FL, 32821

SEQN: 384569 EJAC FROM: CDM	Ply: 1 Qty: 4	**Job Number:** 20-4738 Patterson **Truss Label:** J07	Cust: R 215 JRef:1X012150003 T23 DrwNo: 308.20.0833.13193 / YK 11/03/2020

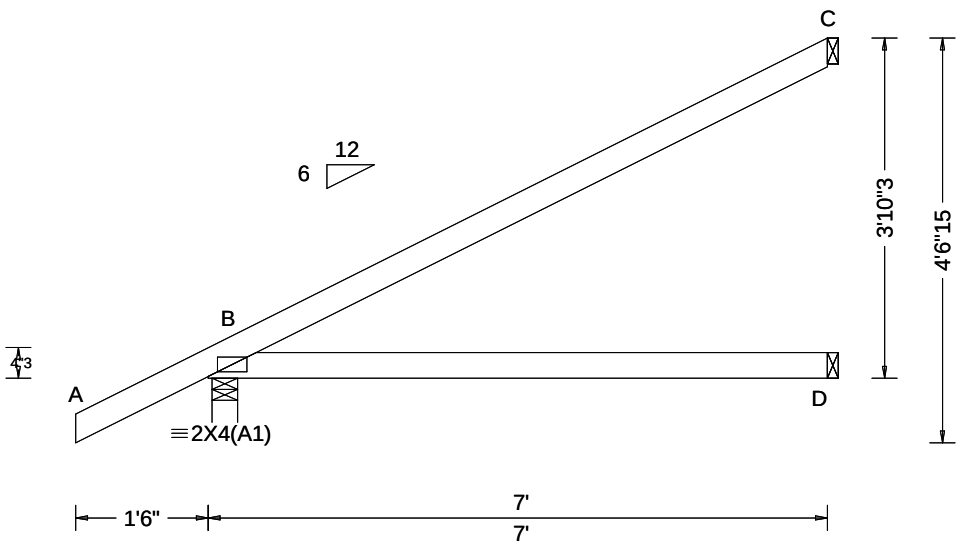

Loading Criteria (psf)	**Wind Criteria**	**Snow Criteria** (Pg,Pf in PSF)	**Defl/CSI Criteria**
TCLL: 20.00 TCDL: 10.00 BCLL: 0.00 BCDL: 10.00 Des Ld: 40.00 NCBCLL: 10.00 Soffit: 2.00 Load Duration: 1.25 Spacing: 24.0 "	Wind Std: ASCE 7-10 Speed: 130 mph Enclosure: Closed Risk Category: II EXP: C Kzt: NA Mean Height: 15.00 ft TCDL: 5.0 psf BCDL: 5.0 psf MWFRS Parallel Dist: h/2 to h C&C Dist a: 3.00 ft Loc. from endwall: not in 4.50 ft GCpi: 0.18 Wind Duration: 1.60	Pg: NA Ct: NA CAT: NA Pf: NA Ce: NA Lu: NA Cs: NA Snow Duration: NA Building Code: FBC 2017 RES TPI Std: 2014 Rep Fac: Yes FT/RT:20(0)/10(0) Plate Type(s): WAVE	PP Deflection in loc L/defl L/# VERT(LL): NA VERT(CL): NA HORZ(LL): 0.017 D - - HORZ(TL): 0.033 D - - Creep Factor: 2.0 Max TC CSI: 0.718 Max BC CSI: 0.528 Max Web CSI: 0.000 VIEW Ver: 20.01.01A.0724.11

▲Maximum Reactions (lbs)

	Gravity			Non-Gravity		
Loc	R+	/ R-	/ Rh	/ Rw	/ U	/ RL
B	402	/-	/-	/280	/52	/121
D	131	/-	/-	/91	/0	/-
C	190	/-	/-	/98	/71	/-

Wind reactions based on MWFRS

B Brg Width = 3.5 Min Req = 1.5
D Brg Width = 1.5 Min Req = -
C Brg Width = 1.5 Min Req = -

Bearing B is a rigid surface.

Members not listed have forces less than 375#

Lumber

Top chord: 2x4 SP #2;
Bot chord: 2x4 SP #2;

Wind

Wind loads based on MWFRS with additional C&C member design.

Additional Notes

The overall height of this truss excluding overhang is 3-10-3.

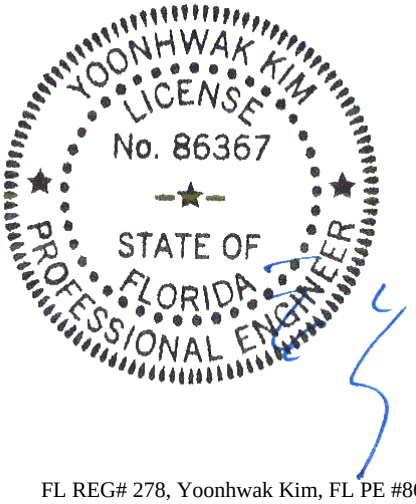

FL REG# 278, Yoonhwak Kim, FL PE #86367
11/03/2020

****WARNING**** READ AND FOLLOW ALL NOTES ON THIS DRAWING!
****IMPORTANT**** FURNISH THIS DRAWING TO ALL CONTRACTORS INCLUDING THE INSTALLERS

Trusses require extreme care in fabricating, handling, shipping, installing and bracing. Refer to and follow the latest edition of BCSI (Building Component Safety Information, by TPI and SBCA) for safety practices prior to performing these functions. Installers shall provide temporary bracing per BCSI. Unless noted otherwise, top chord shall have properly attached structural sheathing and bottom chord shall have a properly attached rigid ceiling. Locations shown for permanent lateral restraint of webs shall have bracing installed per BCSI sections B3, B7, or B10, as applicable. Apply plates to each face of truss and position as shown above and on the Joint Details, unless noted otherwise. Refer to drawings 160A-Z for standard plate positions. Refer to job's General Notes page for additional information.

Alpine, a division of ITW Building Components Group Inc. shall not be responsible for any deviation from this drawing, any failure to build the truss in conformance with ANSI/TPI 1, or for handling, shipping, installation and bracing of trusses. A seal on this drawing or cover page listing this drawing, indicates acceptance of professional engineering responsibility solely for the design shown. The suitability and use of this drawing for any structure is the responsibility of the Building Designer per ANSI/TPI 1 Sec.2.

For more information see these web sites: Alpine: alpineitw.com; TPI: tpinst.org; SBCA: sbcindustry.com; ICC: iccsafe.org; AWC: awc.org

ALPINE AN ITW COMPANY
6750 Forum Drive
Suite 305
Orlando FL, 32821

SEQN: 384563 JACK FROM: CDM	Ply: 1 Qty: 1	**Job Number:** 20-4738 Patterson **Truss Label:** J1A	Cust: R 215 JRef:1X012150003 T22 DrwNo: 308.20.0833.14783 / YK 11/03/2020

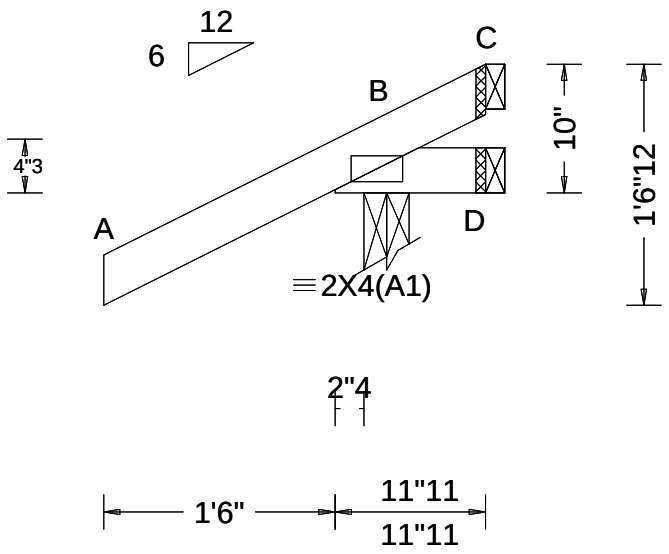

Loading Criteria (psf)	**Wind Criteria**	**Snow Criteria** (Pg,Pf in PSF)	**Defl/CSI Criteria**
TCLL: 20.00 TCDL: 10.00 BCLL: 0.00 BCDL: 10.00 Des Ld: 40.00 NCBCLL: 10.00 Soffit: 2.00 Load Duration: 1.25 Spacing: 24.0 "	Wind Std: ASCE 7-10 Speed: 130 mph Enclosure: Closed Risk Category: II EXP: C Kzt: NA Mean Height: 15.00 ft TCDL: 5.0 psf BCDL: 5.0 psf MWFRS Parallel Dist: 0 to h/2 C&C Dist a: 3.00 ft Loc. from endwall: Any GCpi: 0.18 Wind Duration: 1.60	Pg: NA Ct: NA CAT: NA Pf: NA Ce: NA Lu: NA Cs: NA Snow Duration: NA Building Code: FBC 2017 RES TPI Std: 2014 Rep Fac: Yes FT/RT:20(0)/10(0) Plate Type(s): WAVE	PP Deflection in loc L/defl L/# VERT(LL): NA VERT(CL): NA HORZ(LL): -0.000 D - - HORZ(TL): 0.001 D - - Creep Factor: 2.0 Max TC CSI: 0.321 Max BC CSI: 0.037 Max Web CSI: 0.000 VIEW Ver: 20.01.01A.0724.11

▲Maximum Reactions (lbs)

	Gravity			Non-Gravity		
Loc	R+	/ R-	/ Rh	/ Rw	/ U	/ RL
B	251	/-	/-	/220	/80	/35
D	4	/-18	/-	/17	/20	/-
C	-	/-62	/-	/36	/67	/-

Wind reactions based on MWFRS
B Brg Width = 3.5 Min Req = 1.5
D Brg Width = 1.5 Min Req = -
C Brg Width = 1.5 Min Req = -
Bearing B is a rigid surface.
Members not listed have forces less than 375#

Lumber

Top chord: 2x4 SP #2;
Bot chord: 2x4 SP #2;

Wind

Wind loads based on MWFRS with additional C&C member design.

Left cantilever is exposed to wind

Additional Notes

The overall height of this truss excluding overhang is 0-10-0.

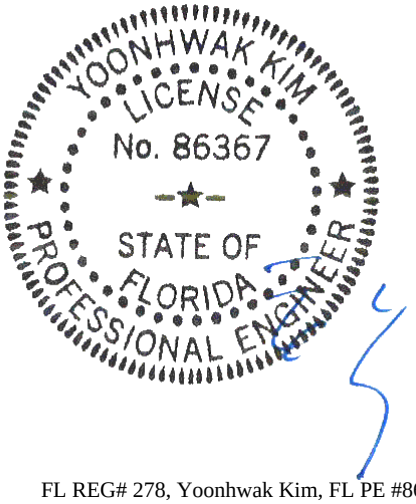

FL REG# 278, Yoonhwak Kim, FL PE #86367
11/03/2020

****WARNING**** READ AND FOLLOW ALL NOTES ON THIS DRAWING!
****IMPORTANT**** FURNISH THIS DRAWING TO ALL CONTRACTORS INCLUDING THE INSTALLERS

Trusses require extreme care in fabricating, handling, shipping, installing and bracing. Refer to and follow the latest edition of BCSI (Building Component Safety Information, by TPI and SBCA) for safety practices prior to performing these functions. Installers shall provide temporary bracing per BCSI. Unless noted otherwise, top chord shall have properly attached structural sheathing and bottom chord shall have a properly attached rigid ceiling. Locations shown for permanent lateral restraint of webs shall have bracing installed per BCSI sections B3, B7, or B10, as applicable. Apply plates to each face of truss and position as shown above and on the Joint Details, unless noted otherwise. Refer to drawings 160A-Z for standard plate positions. Refer to job's General Notes page for additional information.

Alpine, a division of ITW Building Components Group Inc. shall not be responsible for any deviation from this drawing, any failure to build the truss in conformance with ANSI/TPI 1, or for handling, shipping, installation and bracing of trusses. A seal on this drawing or cover page listing this drawing, indicates acceptance of professional engineering responsibility solely for the design shown. The suitability and use of this drawing for any structure is the responsibility of the Building Designer per ANSI/TPI 1 Sec.2.

For more information see these web sites: Alpine: alpineitw.com; TPI: tpinst.org; SBCA: sbcindustry.com; ICC: iccsafe.org; AWC: awc.org

ALPINE AN ITW COMPANY
6750 Forum Drive
Suite 305
Orlando FL, 32821

SEQN: 384564 JACK FROM: CDM	Ply: 1 Qty: 1	**Job Number:** 20-4738 Patterson **Truss Label:** J1B	Cust: R 215 JRef:1X012150003 T19 DrwNo: 308.20.0833.15813 / YK 11/03/2020

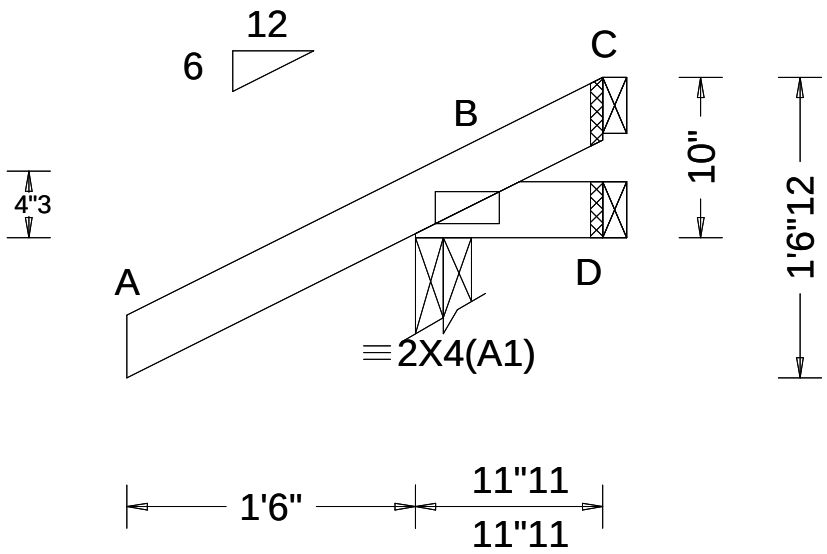

Loading Criteria (psf)

TCLL:	20.00
TCDL:	10.00
BCLL:	0.00
BCDL:	10.00
Des Ld:	40.00
NCBCLL:	10.00
Soffit:	2.00

Load Duration: 1.25
Spacing: 24.0 "

Wind Criteria
Wind Std: ASCE 7-10
Speed: 130 mph
Enclosure: Closed
Risk Category: II
EXP: C Kzt: NA
Mean Height: 15.00 ft
TCDL: 5.0 psf
BCDL: 5.0 psf
MWFRS Parallel Dist: 0 to h/2
C&C Dist a: 3.00 ft
Loc. from endwall: Any
GCpi: 0.18
Wind Duration: 1.60

Snow Criteria (Pg,Pf in PSF)
Pg: NA Ct: NA CAT: NA
Pf: NA Ce: NA
Lu: NA Cs: NA
Snow Duration: NA

Building Code:
FBC 2017 RES
TPI Std: 2014
Rep Fac: Yes
FT/RT:20(0)/10(0)
Plate Type(s):
WAVE

Defl/CSI Criteria
PP Deflection in loc L/defl L/#
VERT(LL): NA
VERT(CL): NA
HORZ(LL): -0.000 D - -
HORZ(TL): 0.001 D - -
Creep Factor: 2.0
Max TC CSI: 0.321
Max BC CSI: 0.035
Max Web CSI: 0.000

VIEW Ver: 20.01.01A.0724.11

▲Maximum Reactions (lbs)

	Gravity			Non-Gravity		
Loc	R+	/ R-	/ Rh	/ Rw	/ U	/ RL
B	256	/-	/-	/204	/71	/35
D	3	/-18	/-	/17	/19	/-
C	-	/-57	/-	/33	/57	/-

Wind reactions based on MWFRS
B Brg Width = 3.5 Min Req = 1.5
D Brg Width = 1.5 Min Req = -
C Brg Width = 1.5 Min Req = -
Bearing B is a rigid surface.
Members not listed have forces less than 375#

Lumber
Top chord: 2x4 SP #2;
Bot chord: 2x4 SP #2;

Wind
Wind loads based on MWFRS with additional C&C member design.

Additional Notes
The overall height of this truss excluding overhang is 0-10-0.

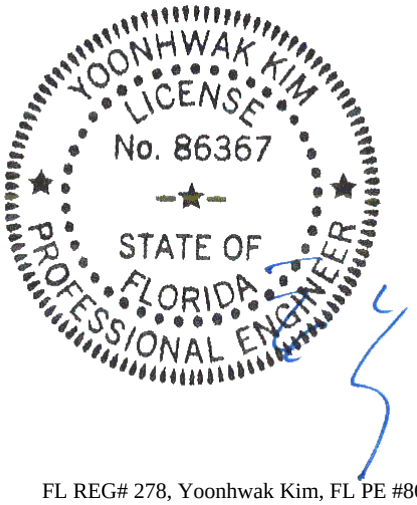

FL REG# 278, Yoonhwak Kim, FL PE #86367
11/03/2020

****WARNING**** READ AND FOLLOW ALL NOTES ON THIS DRAWING!
****IMPORTANT**** FURNISH THIS DRAWING TO ALL CONTRACTORS INCLUDING THE INSTALLERS

Trusses require extreme care in fabricating, handling, shipping, installing and bracing. Refer to and follow the latest edition of BCSI (Building Component Safety Information, by TPI and SBCA) for safety practices prior to performing these functions. Installers shall provide temporary bracing per BCSI. Unless noted otherwise, top chord shall have properly attached structural sheathing and bottom chord shall have a properly attached rigid ceiling. Locations shown for permanent lateral restraint of webs shall have bracing installed per BCSI sections B3, B7, or B10, as applicable. Apply plates to each face of truss and position as shown above and on the Joint Details, unless noted otherwise. Refer to drawings 160A-Z for standard plate positions. Refer to job's General Notes page for additional information.

Alpine, a division of ITW Building Components Group Inc. shall not be responsible for any deviation from this drawing, any failure to build the truss in conformance with ANSI/TPI 1, or for handling, shipping, installation and bracing of trusses. A seal on this drawing or cover page listing this drawing, indicates acceptance of professional engineering responsibility solely for the design shown. The suitability and use of this drawing for any structure is the responsibility of the Building Designer per ANSI/TPI 1 Sec.2.

For more information see these web sites: Alpine: alpineitw.com; TPI: tpinst.org; SBCA: sbcindustry.com; ICC: iccsafe.org; AWC: awc.org

ALPINE AN ITW COMPANY
6750 Forum Drive
Suite 305
Orlando FL, 32821

SEQN: 384565 JACK FROM: CDM	Ply: 1 Qty: 1	**Job Number:** 20-4738 Patterson **Truss Label:** J3A	Cust: R 215 JRef:1X012150003 T21 DrwNo: 308.20.0833.16703 / YK 11/03/2020

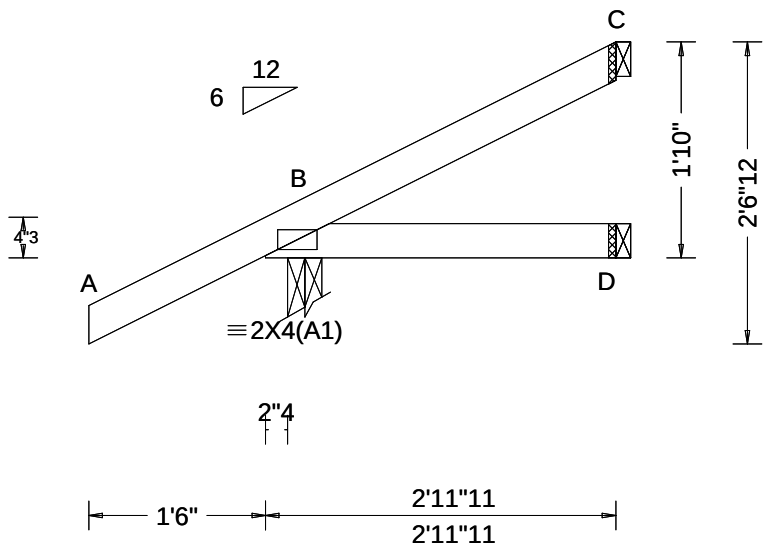

Loading Criteria (psf)
TCLL: 20.00
TCDL: 10.00
BCLL: 0.00
BCDL: 10.00
Des Ld: 40.00
NCBCLL: 10.00
Soffit: 2.00
Load Duration: 1.25
Spacing: 24.0 "

Wind Criteria
Wind Std: ASCE 7-10
Speed: 130 mph
Enclosure: Closed
Risk Category: II
EXP: C Kzt: NA
Mean Height: 15.00 ft
TCDL: 5.0 psf
BCDL: 5.0 psf
MWFRS Parallel Dist: 0 to h/2
C&C Dist a: 3.00 ft
Loc. from endwall: not in 4.50 ft
GCpi: 0.18
Wind Duration: 1.60

Snow Criteria (Pg,Pf in PSF)
Pg: NA Ct: NA CAT: NA
Pf: NA Ce: NA
Lu: NA Cs: NA
Snow Duration: NA

Building Code:
FBC 2017 RES
TPI Std: 2014
Rep Fac: Yes
FT/RT:20(0)/10(0)
Plate Type(s):
WAVE

Defl/CSI Criteria
PP Deflection in loc L/defl L/#
VERT(LL): NA
VERT(CL): NA
HORZ(LL): 0.001 D - -
HORZ(TL): 0.001 D - -
Creep Factor: 2.0
Max TC CSI: 0.196
Max BC CSI: 0.070
Max Web CSI: 0.000

VIEW Ver: 20.01.01A.0724.11

▲Maximum Reactions (lbs)

	Gravity			Non-Gravity		
Loc	R+	/ R-	/ Rh	/ Rw	/ U	/ RL
B	265	/-	/-	/194	/45	/63
D	48	/-	/-	/38	/2	/-
C	59	/-	/-	/24	/24	/-

Wind reactions based on MWFRS
B Brg Width = 3.5 Min Req = 1.5
D Brg Width = 1.5 Min Req = -
C Brg Width = 1.5 Min Req = -
Bearing B is a rigid surface.
Members not listed have forces less than 375#

Lumber
Top chord: 2x4 SP #2;
Bot chord: 2x4 SP #2;

Wind
Wind loads based on MWFRS with additional C&C member design.
Left cantilever is exposed to wind

Additional Notes
The overall height of this truss excluding overhang is 1-10-0.

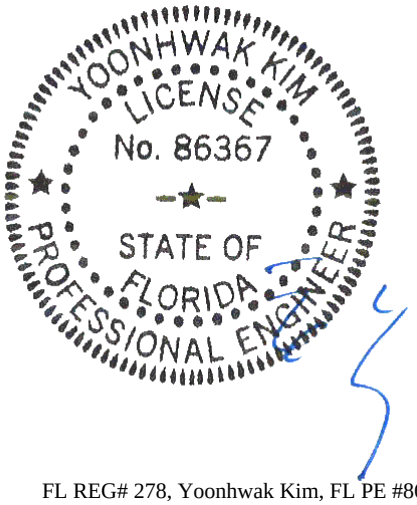

FL REG# 278, Yoonhwak Kim, FL PE #86367
11/03/2020

****WARNING**** READ AND FOLLOW ALL NOTES ON THIS DRAWING!
****IMPORTANT**** FURNISH THIS DRAWING TO ALL CONTRACTORS INCLUDING THE INSTALLERS

Trusses require extreme care in fabricating, handling, shipping, installing and bracing. Refer to and follow the latest edition of BCSI (Building Component Safety Information, by TPI and SBCA) for safety practices prior to performing these functions. Installers shall provide temporary bracing per BCSI. Unless noted otherwise, top chord shall have properly attached structural sheathing and bottom chord shall have a properly attached rigid ceiling. Locations shown for permanent lateral restraint of webs shall have bracing installed per BCSI sections B3, B7, or B10, as applicable. Apply plates to each face of truss and position as shown above and on the Joint Details, unless noted otherwise. Refer to drawings 160A-Z for standard plate positions. Refer to job's General Notes page for additional information.

Alpine, a division of ITW Building Components Group Inc. shall not be responsible for any deviation from this drawing, any failure to build the truss in conformance with ANSI/TPI 1, or for handling, shipping, installation and bracing of trusses. A seal on this drawing or cover page listing this drawing, indicates acceptance of professional engineering responsibility solely for the design shown. The suitability and use of this drawing for any structure is the responsibility of the Building Designer per ANSI/TPI 1 Sec.2.

For more information see these web sites: Alpine: alpineitw.com; TPI: tpinst.org; SBCA: sbcindustry.com; ICC: iccsafe.org; AWC: awc.org

ALPINE AN ITW COMPANY
6750 Forum Drive
Suite 305
Orlando FL, 32821

SEQN: 384566 JACK FROM: CDM	Ply: 1 Qty: 1	**Job Number:** 20-4738 Patterson **Truss Label:** J3B	Cust: R 215 JRef:1X012150003 T18 DrwNo: 308.20.0833.17720 / YK 11/03/2020

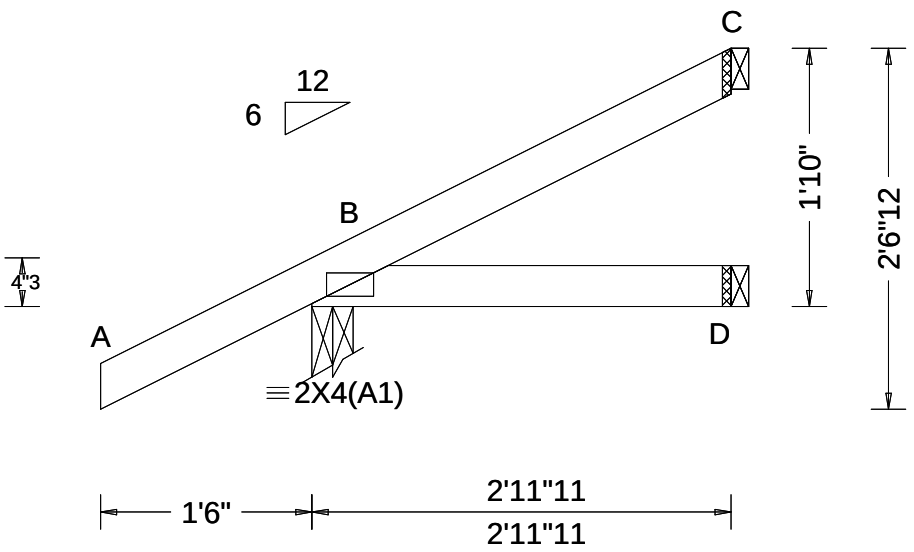

Loading Criteria (psf)
TCLL: 20.00
TCDL: 10.00
BCLL: 0.00
BCDL: 10.00
Des Ld: 40.00
NCBCLL: 10.00
Soffit: 2.00
Load Duration: 1.25
Spacing: 24.0 "

Wind Criteria
Wind Std: ASCE 7-10
Speed: 130 mph
Enclosure: Closed
Risk Category: II
EXP: C Kzt: NA
Mean Height: 15.00 ft
TCDL: 5.0 psf
BCDL: 5.0 psf
MWFRS Parallel Dist: 0 to h/2
C&C Dist a: 3.00 ft
Loc. from endwall: not in 4.50 ft
GCpi: 0.18
Wind Duration: 1.60

Snow Criteria (Pg,Pf in PSF)
Pg: NA Ct: NA CAT: NA
Pf: NA Ce: NA
Lu: NA Cs: NA
Snow Duration: NA

Building Code:
FBC 2017 RES
TPI Std: 2014
Rep Fac: Yes
FT/RT:20(0)/10(0)
Plate Type(s):
WAVE

Defl/CSI Criteria
PP Deflection in loc L/defl L/#
VERT(LL): NA
VERT(CL): NA
HORZ(LL): 0.001 D - -
HORZ(TL): 0.001 D - -
Creep Factor: 2.0
Max TC CSI: 0.196
Max BC CSI: 0.073
Max Web CSI: 0.000

VIEW Ver: 20.01.01A.0724.11

▲Maximum Reactions (lbs)

	Gravity			Non-Gravity		
Loc	R+	/ R-	/ Rh	/ Rw	/ U	/ RL
B	261	/-	/-	/192	/44	/63
D	49	/-	/-	/38	/2	/-
C	61	/-	/-	/26	/25	/-

Wind reactions based on MWFRS
B Brg Width = 3.5 Min Req = 1.5
D Brg Width = 1.5 Min Req = -
C Brg Width = 1.5 Min Req = -
Bearing B is a rigid surface.
Members not listed have forces less than 375#

Lumber
Top chord: 2x4 SP #2;
Bot chord: 2x4 SP #2;

Wind
Wind loads based on MWFRS with additional C&C member design.

Additional Notes
The overall height of this truss excluding overhang is 1-10-0.

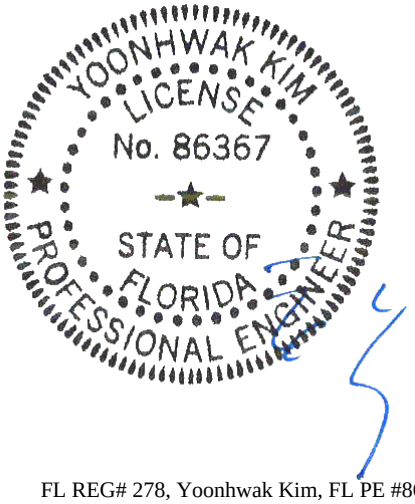

FL REG# 278, Yoonhwak Kim, FL PE #86367
11/03/2020

****WARNING**** READ AND FOLLOW ALL NOTES ON THIS DRAWING!
****IMPORTANT**** FURNISH THIS DRAWING TO ALL CONTRACTORS INCLUDING THE INSTALLERS

Trusses require extreme care in fabricating, handling, shipping, installing and bracing. Refer to and follow the latest edition of BCSI (Building Component Safety Information, by TPI and SBCA) for safety practices prior to performing these functions. Installers shall provide temporary bracing per BCSI. Unless noted otherwise, top chord shall have properly attached structural sheathing and bottom chord shall have a properly attached rigid ceiling. Locations shown for permanent lateral restraint of webs shall have bracing installed per BCSI sections B3, B7, or B10, as applicable. Apply plates to each face of truss and position as shown above and on the Joint Details, unless noted otherwise. Refer to drawings 160A-Z for standard plate positions. Refer to job's General Notes page for additional information.

Alpine, a division of ITW Building Components Group Inc. shall not be responsible for any deviation from this drawing, any failure to build the truss in conformance with ANSI/TPI 1, or for handling, shipping, installation and bracing of trusses. A seal on this drawing or cover page listing this drawing, indicates acceptance of professional engineering responsibility solely for the design shown. The suitability and use of this drawing for any structure is the responsibility of the Building Designer per ANSI/TPI 1 Sec.2.

For more information see these web sites: Alpine: alpineitw.com; TPI: tpinst.org; SBCA: sbcindustry.com; ICC: iccsafe.org; AWC: awc.org

ALPINE AN ITW COMPANY
6750 Forum Drive
Suite 305
Orlando FL, 32821

SEQN: 384567 JACK FROM: CDM	Ply: 1 Qty: 1	**Job Number:** 20-4738 Patterson **Truss Label:** J5A	Cust: R 215 JRef:1X012150003 T20 DrwNo: 308.20.0833.18967 / YK 11/03/2020

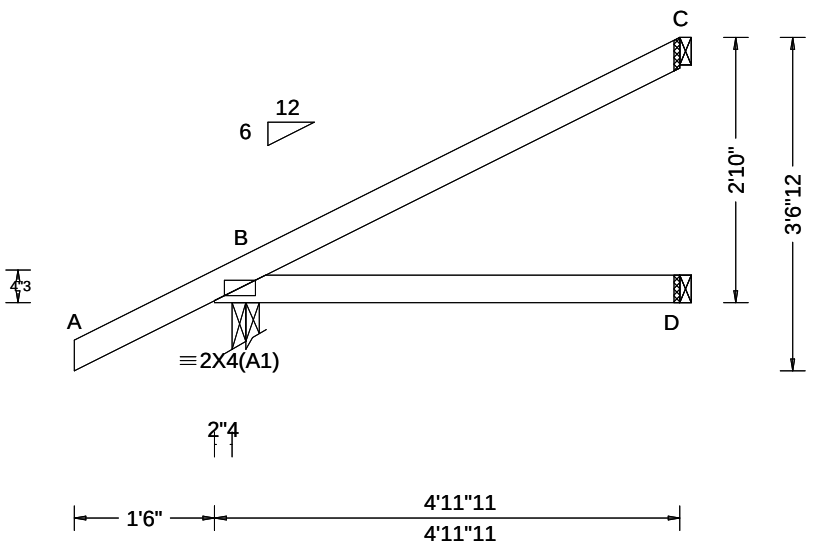

Loading Criteria (psf)

TCLL:	20.00
TCDL:	10.00
BCLL:	0.00
BCDL:	10.00
Des Ld:	40.00
NCBCLL:	10.00
Soffit:	2.00

Load Duration: 1.25
Spacing: 24.0 "

Wind Criteria
Wind Std: ASCE 7-10
Speed: 130 mph
Enclosure: Closed
Risk Category: II
EXP: C Kzt: NA
Mean Height: 15.00 ft
TCDL: 5.0 psf
BCDL: 5.0 psf
MWFRS Parallel Dist: 0 to h/2
C&C Dist a: 3.00 ft
Loc. from endwall: not in 4.50 ft
GCpi: 0.18
Wind Duration: 1.60

Snow Criteria (Pg,Pf in PSF)
Pg: NA Ct: NA CAT: NA
Pf: NA Ce: NA
Lu: NA Cs: NA
Snow Duration: NA

Building Code:
FBC 2017 RES
TPI Std: 2014
Rep Fac: Yes
FT/RT:20(0)/10(0)
Plate Type(s):
WAVE

Defl/CSI Criteria
PP Deflection in loc L/defl L/#
VERT(LL): NA
VERT(CL): NA
HORZ(LL): 0.004 D - -
HORZ(TL): 0.007 D - -
Creep Factor: 2.0
Max TC CSI: 0.310
Max BC CSI: 0.240
Max Web CSI: 0.000

VIEW Ver: 20.01.01A.0724.11

▲Maximum Reactions (lbs)

	Gravity			Non-Gravity		
Loc	R+	/ R-	/ Rh	/ Rw	/ U	/ RL
B	333	/-	/-	/236	/47	/92
D	88	/-	/-	/62	/-	/-
C	125	/-	/-	/61	/48	/-

Wind reactions based on MWFRS
B Brg Width = 3.5 Min Req = 1.5
D Brg Width = 1.5 Min Req = -
C Brg Width = 1.5 Min Req = -
Bearing B is a rigid surface.
Members not listed have forces less than 375#

Lumber

Top chord: 2x4 SP #2;
Bot chord: 2x4 SP #2;

Wind

Wind loads based on MWFRS with additional C&C member design.

Left cantilever is exposed to wind

Additional Notes

The overall height of this truss excluding overhang is 2-10-0.

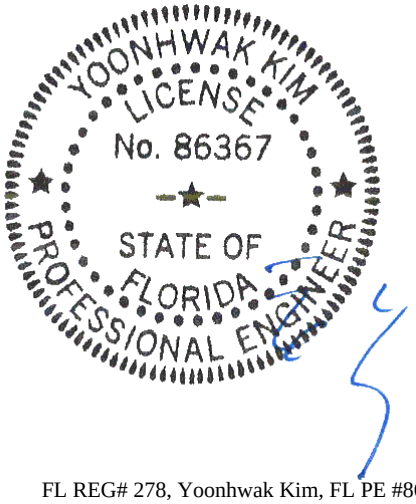

FL REG# 278, Yoonhwak Kim, FL PE #86367
11/03/2020

****WARNING**** READ AND FOLLOW ALL NOTES ON THIS DRAWING!
****IMPORTANT**** FURNISH THIS DRAWING TO ALL CONTRACTORS INCLUDING THE INSTALLERS

Trusses require extreme care in fabricating, handling, shipping, installing and bracing. Refer to and follow the latest edition of BCSI (Building Component Safety Information, by TPI and SBCA) for safety practices prior to performing these functions. Installers shall provide temporary bracing per BCSI. Unless noted otherwise, top chord shall have properly attached structural sheathing and bottom chord shall have a properly attached rigid ceiling. Locations shown for permanent lateral restraint of webs shall have bracing installed per BCSI sections B3, B7, or B10, as applicable. Apply plates to each face of truss and position as shown above and on the Joint Details, unless noted otherwise. Refer to drawings 160A-Z for standard plate positions. Refer to job's General Notes page for additional information.

Alpine, a division of ITW Building Components Group Inc. shall not be responsible for any deviation from this drawing, any failure to build the truss in conformance with ANSI/TPI 1, or for handling, shipping, installation and bracing of trusses. A seal on this drawing or cover page listing this drawing, indicates acceptance of professional engineering responsibility solely for the design shown. The suitability and use of this drawing for any structure is the responsibility of the Building Designer per ANSI/TPI 1 Sec.2.

For more information see these web sites: Alpine: alpineitw.com; TPI: tpinst.org; SBCA: sbcindustry.com; ICC: iccsafe.org; AWC: awc.org

ALPINE AN ITW COMPANY
6750 Forum Drive
Suite 305
Orlando FL, 32821

SEQN: 384568 JACK FROM: CDM	Ply: 1 Qty: 1	**Job Number:** 20-4738 Patterson **Truss Label:** J5B	Cust: R 215 JRef:1X012150003 T17 DrwNo: 308.20.0833.20003 / YK 11/03/2020

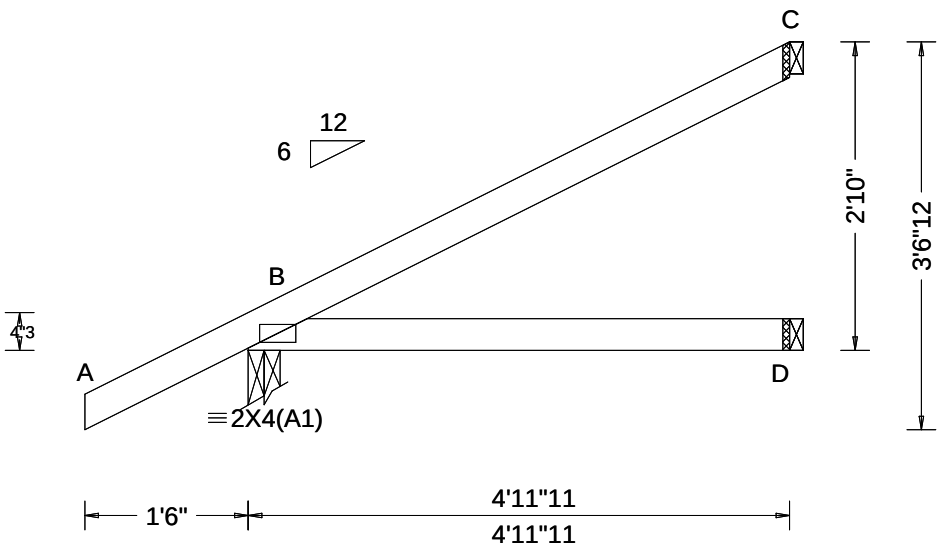

Loading Criteria (psf)

TCLL: 20.00
TCDL: 10.00
BCLL: 0.00
BCDL: 10.00
Des Ld: 40.00
NCBCLL: 10.00
Soffit: 2.00
Load Duration: 1.25
Spacing: 24.0 "

Wind Criteria

Wind Std: ASCE 7-10
Speed: 130 mph
Enclosure: Closed
Risk Category: II
EXP: C Kzt: NA
Mean Height: 15.00 ft
TCDL: 5.0 psf
BCDL: 5.0 psf
MWFRS Parallel Dist: 0 to h/2
C&C Dist a: 3.00 ft
Loc. from endwall: not in 4.50 ft
GCpi: 0.18
Wind Duration: 1.60

Snow Criteria (Pg,Pf in PSF)

Pg: NA Ct: NA CAT: NA
Pf: NA Ce: NA
Lu: NA Cs: NA
Snow Duration: NA

Building Code:
FBC 2017 RES
TPI Std: 2014
Rep Fac: Yes
FT/RT:20(0)/10(0)
Plate Type(s):
WAVE

Defl/CSI Criteria

PP Deflection in loc L/defl L/#
VERT(LL): NA
VERT(CL): NA
HORZ(LL): 0.004 D - -
HORZ(TL): 0.008 D - -
Creep Factor: 2.0
Max TC CSI: 0.318
Max BC CSI: 0.245
Max Web CSI: 0.000

VIEW Ver: 20.01.01A.0724.11

▲Maximum Reactions (lbs)

	Gravity			Non-Gravity		
Loc	R+	/ R-	/ Rh	/ Rw	/ U	/ RL
B	330	/-	/-	/234	/47	/92
D	89	/-	/-	/62	/-	/-
C	127	/-	/-	/63	/48	/-

Wind reactions based on MWFRS
B Brg Width = 3.5 Min Req = 1.5
D Brg Width = 1.5 Min Req = -
C Brg Width = 1.5 Min Req = -
Bearing B is a rigid surface.
Members not listed have forces less than 375#

Lumber

Top chord: 2x4 SP #2;
Bot chord: 2x4 SP #2;

Wind

Wind loads based on MWFRS with additional C&C member design.

Additional Notes

The overall height of this truss excluding overhang is 2-10-0.

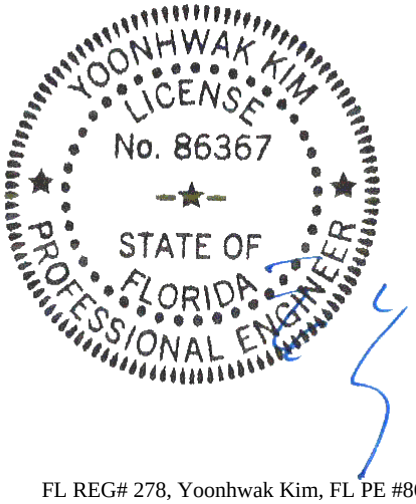

FL REG# 278, Yoonhwak Kim, FL PE #86367
11/03/2020

****WARNING**** READ AND FOLLOW ALL NOTES ON THIS DRAWING!
****IMPORTANT**** FURNISH THIS DRAWING TO ALL CONTRACTORS INCLUDING THE INSTALLERS

Trusses require extreme care in fabricating, handling, shipping, installing and bracing. Refer to and follow the latest edition of BCSI (Building Component Safety Information, by TPI and SBCA) for safety practices prior to performing these functions. Installers shall provide temporary bracing per BCSI. Unless noted otherwise, top chord shall have properly attached structural sheathing and bottom chord shall have a properly attached rigid ceiling. Locations shown for permanent lateral restraint of webs shall have bracing installed per BCSI sections B3, B7, or B10, as applicable. Apply plates to each face of truss and position as shown above and on the Joint Details, unless noted otherwise. Refer to drawings 160A-Z for standard plate positions. Refer to job's General Notes page for additional information.

Alpine, a division of ITW Building Components Group Inc. shall not be responsible for any deviation from this drawing, any failure to build the truss in conformance with ANSI/TPI 1, or for handling, shipping, installation and bracing of trusses. A seal on this drawing or cover page listing this drawing, indicates acceptance of professional engineering responsibility solely for the design shown. The suitability and use of this drawing for any structure is the responsibility of the Building Designer per ANSI/TPI 1 Sec.2.

For more information see these web sites: Alpine: alpineitw.com; TPI: tpinst.org; SBCA: sbcindustry.com; ICC: iccsafe.org; AWC: awc.org

ALPINE AN ITW COMPANY
6750 Forum Drive
Suite 305
Orlando FL, 32821

SEQN: 384570 EJAC FROM: CDM	Ply: 1 Qty: 5	**Job Number:** 20-4738 Patterson **Truss Label:** J7A	Cust: R 215 JRef:1X012150003 T24 DrwNo: 308.20.0833.21400 / YK 11/03/2020

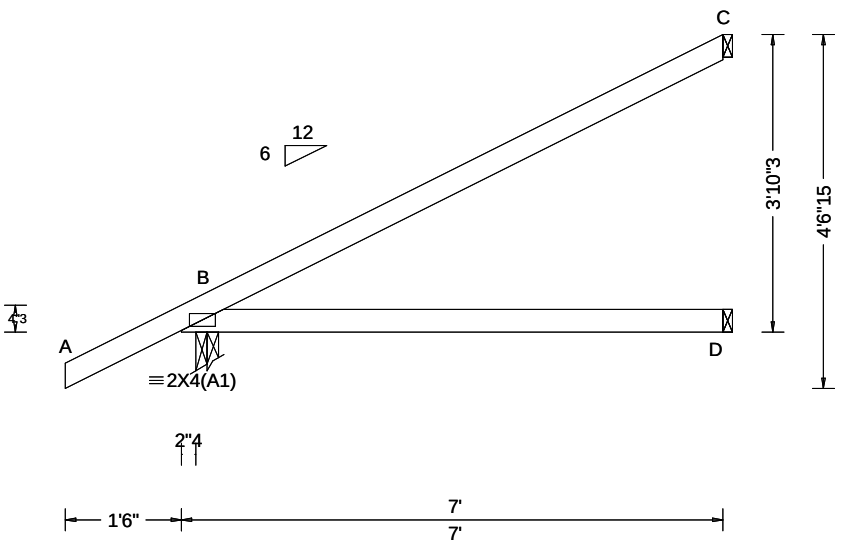

Loading Criteria (psf)	**Wind Criteria**	**Snow Criteria** (Pg,Pf in PSF)	**Defl/CSI Criteria**
TCLL: 20.00 TCDL: 10.00 BCLL: 0.00 BCDL: 10.00 Des Ld: 40.00 NCBCLL: 10.00 Soffit: 2.00 Load Duration: 1.25 Spacing: 24.0 "	Wind Std: ASCE 7-10 Speed: 130 mph Enclosure: Closed Risk Category: II EXP: C Kzt: NA Mean Height: 15.00 ft TCDL: 5.0 psf BCDL: 5.0 psf MWFRS Parallel Dist: h/2 to h C&C Dist a: 3.00 ft Loc. from endwall: not in 4.50 ft GCpi: 0.18 Wind Duration: 1.60	Pg: NA Ct: NA CAT: NA Pf: NA Ce: NA Lu: NA Cs: NA Snow Duration: NA Building Code: FBC 2017 RES TPI Std: 2014 Rep Fac: Yes FT/RT:20(0)/10(0) Plate Type(s): WAVE	PP Deflection in loc L/defl L/# VERT(LL): NA VERT(CL): NA HORZ(LL): 0.013 D - - HORZ(TL): 0.026 D - - Creep Factor: 2.0 Max TC CSI: 0.688 Max BC CSI: 0.506 Max Web CSI: 0.000 VIEW Ver: 20.01.01A.0724.11

▲Maximum Reactions (lbs)

	Gravity			Non-Gravity		
Loc	R+	/ R-	/ Rh	/ Rw	/ U	/ RL
B	410	/-	/-	/285	/53	/121
D	128	/-	/-	/88	/-	/-
C	186	/-	/-	/94	/71	/-

Wind reactions based on MWFRS

B Brg Width = 3.5 Min Req = 1.5
D Brg Width = 1.5 Min Req = -
C Brg Width = 1.5 Min Req = -

Bearing B is a rigid surface.

Members not listed have forces less than 375#

Lumber

Top chord: 2x4 SP #2;
Bot chord: 2x4 SP #2;

Wind

Wind loads based on MWFRS with additional C&C member design.

Left cantilever is exposed to wind

Additional Notes

The overall height of this truss excluding overhang is 3-10-3.

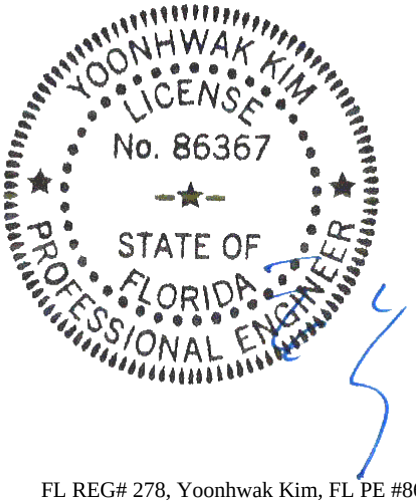

FL REG# 278, Yoonhwak Kim, FL PE #86367
11/03/2020

****WARNING**** READ AND FOLLOW ALL NOTES ON THIS DRAWING!
****IMPORTANT**** FURNISH THIS DRAWING TO ALL CONTRACTORS INCLUDING THE INSTALLERS

Trusses require extreme care in fabricating, handling, shipping, installing and bracing. Refer to and follow the latest edition of BCSI (Building Component Safety Information, by TPI and SBCA) for safety practices prior to performing these functions. Installers shall provide temporary bracing per BCSI. Unless noted otherwise, top chord shall have properly attached structural sheathing and bottom chord shall have a properly attached rigid ceiling. Locations shown for permanent lateral restraint of webs shall have bracing installed per BCSI sections B3, B7, or B10, as applicable. Apply plates to each face of truss and position as shown above and on the Joint Details, unless noted otherwise. Refer to drawings 160A-Z for standard plate positions. Refer to job's General Notes page for additional information.

Alpine, a division of ITW Building Components Group Inc. shall not be responsible for any deviation from this drawing, any failure to build the truss in conformance with ANSI/TPI 1, or for handling, shipping, installation and bracing of trusses. A seal on this drawing or cover page listing this drawing, indicates acceptance of professional engineering responsibility solely for the design shown. The suitability and use of this drawing for any structure is the responsibility of the Building Designer per ANSI/TPI 1 Sec.2.

For more information see these web sites: Alpine: alpineitw.com; TPI: tpinst.org; SBCA: sbcindustry.com; ICC: iccsafe.org; AWC: awc.org

ALPINE AN ITW COMPANY
6750 Forum Drive
Suite 305
Orlando FL, 32821

SEQN: 384523 COMN FROM: CDM	Ply: 1 Qty: 9	**Job Number:** 20-4738 Patterson **Truss Label:** K01	Cust: R 215 JRef:1X012150003 T37 DrwNo: 308.20.0833.22710 / YK 11/03/2020

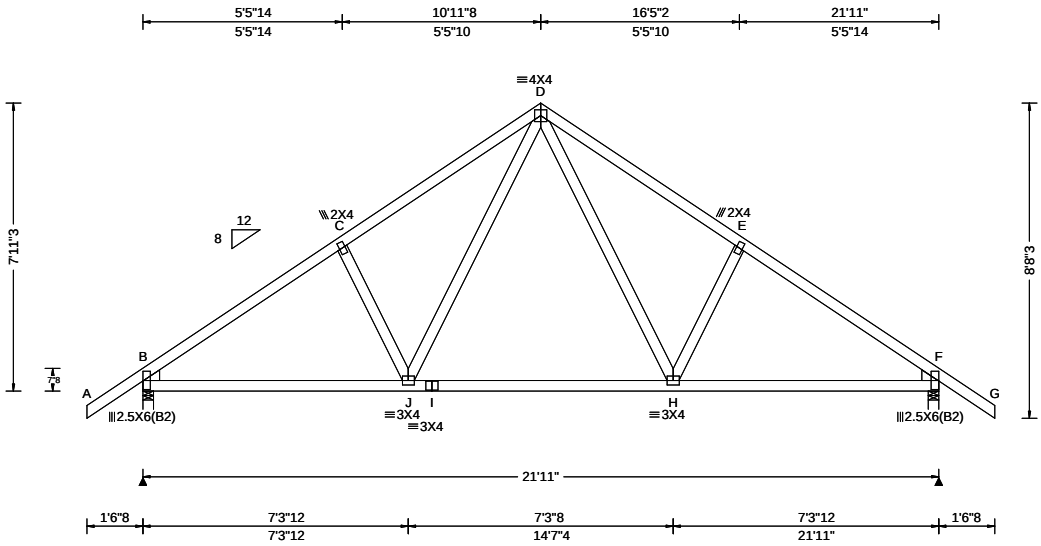

Loading Criteria (psf)

TCLL: 20.00
TCDL: 10.00
BCLL: 0.00
BCDL: 10.00
Des Ld: 40.00
NCBCLL: 10.00
Soffit: 2.00
Load Duration: 1.25
Spacing: 24.0 "

Wind Criteria

Wind Std: ASCE 7-10
Speed: 130 mph
Enclosure: Closed
Risk Category: II
EXP: C Kzt: NA
Mean Height: 15.00 ft
TCDL: 5.0 psf
BCDL: 5.0 psf
MWFRS Parallel Dist: 0 to h/2
C&C Dist a: 3.00 ft
Loc. from endwall: not in 4.50 ft
GCpi: 0.18
Wind Duration: 1.60

Snow Criteria (Pg,Pf in PSF)

Pg: NA Ct: NA CAT: NA
Pf: NA Ce: NA
Lu: NA Cs: NA
Snow Duration: NA

Building Code:
FBC 2017 RES
TPI Std: 2014
Rep Fac: Yes
FT/RT:20(0)/10(0)
Plate Type(s):
WAVE

Defl/CSI Criteria

PP Deflection in	loc	L/defl	L/#
VERT(LL): 0.056	H	999	240
VERT(CL): 0.108	H	999	180
HORZ(LL): 0.031	H	-	-
HORZ(TL): 0.060	H	-	-

Creep Factor: 2.0
Max TC CSI: 0.518
Max BC CSI: 0.637
Max Web CSI: 0.191

VIEW Ver: 20.01.01A.0724.11

▲Maximum Reactions (lbs)

Loc	Gravity R+	/ R-	/ Rh	Non-Gravity / Rw	/ U	/ RL
B	1096	/-	/-	/637	/174	/261
F	1096	/-	/-	/637	/174	/-

Wind reactions based on MWFRS
B Brg Width = 3.5 Min Req = 1.5
F Brg Width = 3.5 Min Req = 1.5
Bearings B & F are a rigid surface.
Members not listed have forces less than 375#

Maximum Top Chord Forces Per Ply (lbs)

Chords	Tens.	Comp.	Chords	Tens.	Comp.
B - C	258	- 1401	D - E	315	- 1244
C - D	314	- 1244	E - F	259	- 1401

Maximum Bot Chord Forces Per Ply (lbs)

Chords	Tens.	Comp.	Chords	Tens.	Comp.
B - J	1073	- 108	I - H	741	- 42
J - I	741	- 42	H - F	1073	- 112

Maximum Web Forces Per Ply (lbs)

Webs	Tens.	Comp.	Webs	Tens.	Comp.
J - D	501	- 127	D - H	502	- 126

Lumber

Top chord: 2x4 SP #2;
Bot chord: 2x4 SP #2;
Webs: 2x4 SP #3;
Lt Wedge: 2x4 SP #3;Rt Wedge: 2x4 SP #3;

Loading

Truss passed check for 20 psf additional bottom chord live load in areas with 42"-high x 24"-wide clearance.

Wind

Wind loads based on MWFRS with additional C&C member design.

Additional Notes

The overall height of this truss excluding overhang is 7-11-3.

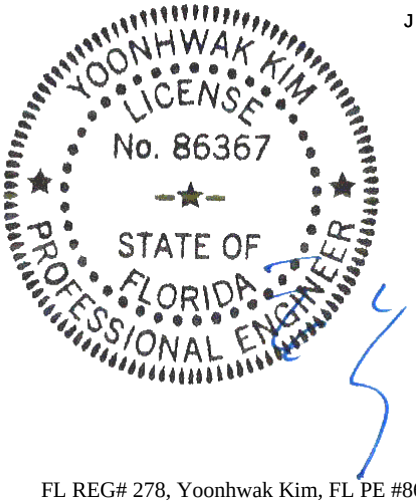

FL REG# 278, Yoonhwak Kim, FL PE #86367
11/03/2020

****WARNING**** READ AND FOLLOW ALL NOTES ON THIS DRAWING!
****IMPORTANT**** FURNISH THIS DRAWING TO ALL CONTRACTORS INCLUDING THE INSTALLERS

Trusses require extreme care in fabricating, handling, shipping, installing and bracing. Refer to and follow the latest edition of BCSI (Building Component Safety Information, by TPI and SBCA) for safety practices prior to performing these functions. Installers shall provide temporary bracing per BCSI. Unless noted otherwise, top chord shall have properly attached structural sheathing and bottom chord shall have a properly attached rigid ceiling. Locations shown for permanent lateral restraint of webs shall have bracing installed per BCSI sections B3, B7, or B10, as applicable. Apply plates to each face of truss and position as shown above and on the Joint Details, unless noted otherwise. Refer to drawings 160A-Z for standard plate positions. Refer to job's General Notes page for additional information.

Alpine, a division of ITW Building Components Group Inc. shall not be responsible for any deviation from this drawing, any failure to build the truss in conformance with ANSI/TPI 1, or for handling, shipping, installation and bracing of trusses. A seal on this drawing or cover page listing this drawing, indicates acceptance of professional engineering responsibility solely for the design shown. The suitability and use of this drawing for any structure is the responsibility of the Building Designer per ANSI/TPI 1 Sec.2.

For more information see these web sites: Alpine: alpineitw.com; TPI: tpinst.org; SBCA: sbcindustry.com; ICC: iccsafe.org; AWC: awc.org

ALPINE AN ITW COMPANY
6750 Forum Drive
Suite 305
Orlando FL, 32821

SEQN: 384526 COMN FROM: CDM	Ply: 1 Qty: 3	**Job Number:** 20-4738 Patterson **Truss Label:** K02	Cust: R 215 JRef:1X012150003 T32 DrwNo: 308.20.0833.23890 / YK 11/03/2020

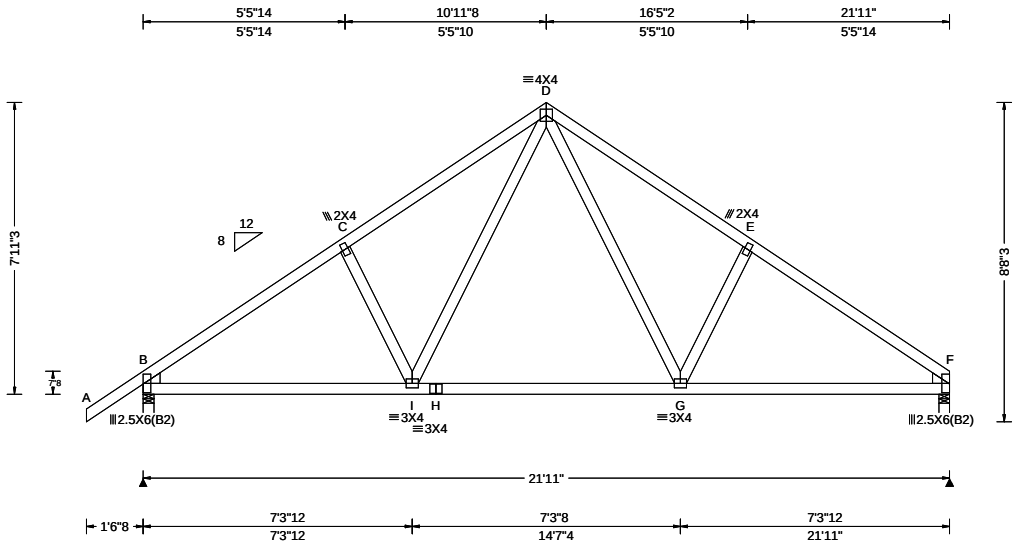

Loading Criteria (psf)	**Wind Criteria**	**Snow Criteria** (Pg,Pf in PSF)	**Defl/CSI Criteria**
TCLL: 20.00 TCDL: 10.00 BCLL: 0.00 BCDL: 10.00 Des Ld: 40.00 NCBCLL: 10.00 Soffit: 2.00 Load Duration: 1.25 Spacing: 24.0 "	Wind Std: ASCE 7-10 Speed: 130 mph Enclosure: Closed Risk Category: II EXP: C Kzt: NA Mean Height: 15.00 ft TCDL: 5.0 psf BCDL: 5.0 psf MWFRS Parallel Dist: h to 2h C&C Dist a: 3.00 ft Loc. from endwall: not in 9.00 ft GCpi: 0.18 Wind Duration: 1.60	Pg: NA Ct: NA CAT: NA Pf: NA Ce: NA Lu: NA Cs: NA Snow Duration: NA Building Code: FBC 2017 RES TPI Std: 2014 Rep Fac: Yes FT/RT:20(0)/10(0) Plate Type(s): WAVE	PP Deflection in loc L/defl L/# VERT(LL): 0.055 I 999 240 VERT(CL): 0.106 I 999 180 HORZ(LL): 0.029 G - - HORZ(TL): 0.056 G - - Creep Factor: 2.0 Max TC CSI: 0.519 Max BC CSI: 0.632 Max Web CSI: 0.198 VIEW Ver: 20.01.01A.0724.11

▲ Maximum Reactions (lbs)

	Gravity			Non-Gravity		
Loc	R+	/ R-	/ Rh	/ Rw	/ U	/ RL
B	1100	/-	/-	/637	/14	/240
F	986	/-	/-	/539	/5	/-

Wind reactions based on MWFRS
B Brg Width = 3.5 Min Req = 1.5
F Brg Width = 3.5 Min Req = 1.5
Bearings B & F are a rigid surface.
Members not listed have forces less than 375#

Maximum Top Chord Forces Per Ply (lbs)

Chords	Tens.	Comp.	Chords	Tens.	Comp.
B - C	262	- 1407	D - E	337	- 1262
C - D	320	- 1250	E - F	279	- 1417

Maximum Bot Chord Forces Per Ply (lbs)

Chords	Tens.	Comp.	Chords	Tens.	Comp.
B - I	1078	- 152	H - G	746	- 30
I - H	746	- 30	G - F	1093	- 157

Maximum Web Forces Per Ply (lbs)

Webs	Tens.	Comp.	Webs	Tens.	Comp.
I - D	500	- 124	D - G	520	- 132

Lumber

Top chord: 2x4 SP #2;
Bot chord: 2x4 SP #2;
Webs: 2x4 SP #3;
Lt Wedge: 2x4 SP #3;Rt Wedge: 2x4 SP #3;

Loading

Truss passed check for 20 psf additional bottom chord live load in areas with 42"-high x 24"-wide clearance.

Wind

Wind loads based on MWFRS with additional C&C member design.

Additional Notes

The overall height of this truss excluding overhang is 7-11-3.

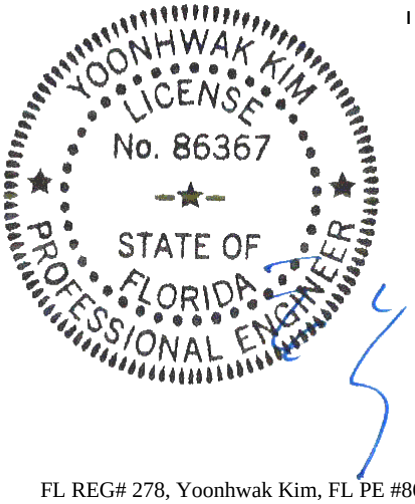

FL REG# 278, Yoonhwak Kim, FL PE #86367
11/03/2020

****WARNING**** READ AND FOLLOW ALL NOTES ON THIS DRAWING!
****IMPORTANT**** FURNISH THIS DRAWING TO ALL CONTRACTORS INCLUDING THE INSTALLERS

Trusses require extreme care in fabricating, handling, shipping, installing and bracing. Refer to and follow the latest edition of BCSI (Building Component Safety Information, by TPI and SBCA) for safety practices prior to performing these functions. Installers shall provide temporary bracing per BCSI. Unless noted otherwise, top chord shall have properly attached structural sheathing and bottom chord shall have a properly attached rigid ceiling. Locations shown for permanent lateral restraint of webs shall have bracing installed per BCSI sections B3, B7, or B10, as applicable. Apply plates to each face of truss and position as shown above and on the Joint Details, unless noted otherwise. Refer to drawings 160A-Z for standard plate positions. Refer to job's General Notes page for additional information.

Alpine, a division of ITW Building Components Group Inc. shall not be responsible for any deviation from this drawing, any failure to build the truss in conformance with ANSI/TPI 1, or for handling, shipping, installation and bracing of trusses. A seal on this drawing or cover page listing this drawing, indicates acceptance of professional engineering responsibility solely for the design shown. The suitability and use of this drawing for any structure is the responsibility of the Building Designer per ANSI/TPI 1 Sec.2.

For more information see these web sites: Alpine: alpineitw.com; TPI: tpinst.org; SBCA: sbcindustry.com; ICC: iccsafe.org; AWC: awc.org

ALPINE AN ITW COMPANY
6750 Forum Drive
Suite 305
Orlando FL, 32821

SEQN: 384620 MONO FROM: CDM	Ply: 1 Qty: 2	**Job Number:** 20-4738 Patterson **Truss Label:** K03	Cust: R 215 JRef:1X012150003 T39 DrwNo: 308.20.0833.24787 / YK 11/03/2020

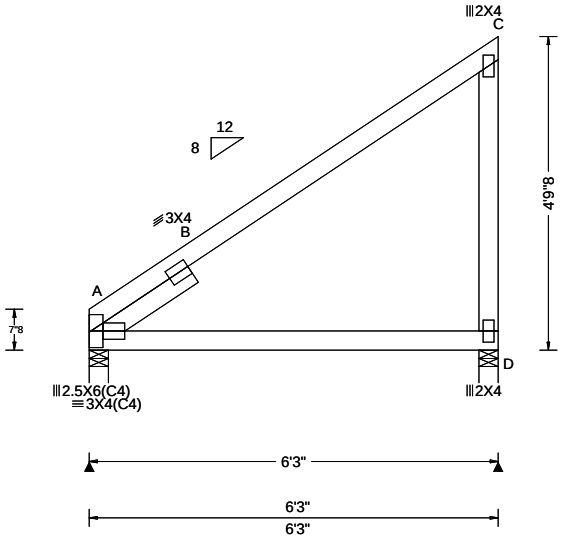

Loading Criteria (psf)	**Wind Criteria**	**Snow Criteria** (Pg,Pf in PSF)	**Defl/CSI Criteria**
TCLL: 20.00 TCDL: 10.00 BCLL: 0.00 BCDL: 10.00 Des Ld: 40.00 NCBCLL: 10.00 Soffit: 2.00 Load Duration: 1.25 Spacing: 24.0 "	Wind Std: ASCE 7-10 Speed: 130 mph Enclosure: Closed Risk Category: II EXP: C Kzt: NA Mean Height: 15.00 ft TCDL: 5.0 psf BCDL: 5.0 psf MWFRS Parallel Dist: h to 2h C&C Dist a: 3.00 ft Loc. from endwall: not in 9.00 ft GCpi: 0.18 Wind Duration: 1.60	Pg: NA Ct: NA CAT: NA Pf: NA Ce: NA Lu: NA Cs: NA Snow Duration: NA Building Code: FBC 2017 RES TPI Std: 2014 Rep Fac: Yes FT/RT:20(0)/10(0) Plate Type(s): WAVE	PP Deflection in loc L/defl L/# VERT(LL): NA VERT(CL): NA HORZ(LL): 0.061 B - - HORZ(TL): 0.128 B - - Creep Factor: 2.0 Max TC CSI: 0.615 Max BC CSI: 0.431 Max Web CSI: 0.300 VIEW Ver: 20.01.01A.0724.11

▲Maximum Reactions (lbs)

	Gravity			Non-Gravity		
Loc	R+	/ R-	/ Rh	/ Rw	/ U	/ RL
A	269	/-	/-	/176	/-	/79
D	256	/-	/-	/195	/41	/-

Wind reactions based on MWFRS
A Brg Width = 3.5 Min Req = 1.5
D Brg Width = 3.5 Min Req = 1.5
Bearings A & D are a rigid surface.
Members not listed have forces less than 375#

Maximum Top Chord Forces Per Ply (lbs)

Chords	Tens.	Comp.
A - B	914	-1089

Lumber

Top chord: 2x4 SP #2;
Bot chord: 2x4 SP #2;
Webs: 2x4 SP #3;
Lt Slider: 2x4 SP #3; block length = 1.783'

Wind

Wind loads based on MWFRS with additional C&C member design.

Right end vertical not exposed to wind pressure.

Additional Notes

The overall height of this truss excluding overhang is 4-9-8.

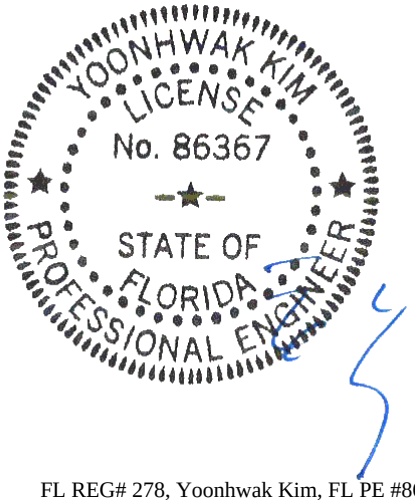

FL REG# 278, Yoonhwak Kim, FL PE #86367
11/03/2020

****WARNING**** READ AND FOLLOW ALL NOTES ON THIS DRAWING!
****IMPORTANT**** FURNISH THIS DRAWING TO ALL CONTRACTORS INCLUDING THE INSTALLERS

Trusses require extreme care in fabricating, handling, shipping, installing and bracing. Refer to and follow the latest edition of BCSI (Building Component Safety Information, by TPI and SBCA) for safety practices prior to performing these functions. Installers shall provide temporary bracing per BCSI. Unless noted otherwise, top chord shall have properly attached structural sheathing and bottom chord shall have a properly attached rigid ceiling. Locations shown for permanent lateral restraint of webs shall have bracing installed per BCSI sections B3, B7, or B10, as applicable. Apply plates to each face of truss and position as shown above and on the Joint Details, unless noted otherwise. Refer to drawings 160A-Z for standard plate positions. Refer to job's General Notes page for additional information.

Alpine, a division of ITW Building Components Group Inc. shall not be responsible for any deviation from this drawing, any failure to build the truss in conformance with ANSI/TPI 1, or for handling, shipping, installation and bracing of trusses. A seal on this drawing or cover page listing this drawing, indicates acceptance of professional engineering responsibility solely for the design shown. The suitability and use of this drawing for any structure is the responsibility of the Building Designer per ANSI/TPI 1 Sec.2.

For more information see these web sites: Alpine: alpineitw.com; TPI: tpinst.org; SBCA: sbcindustry.com; ICC: iccsafe.org; AWC: awc.org

ALPINE AN ITW COMPANY
6750 Forum Drive
Suite 305
Orlando FL, 32821

SEQN: 384541 GABL FROM: CDM	Ply: 1 Qty: 1	**Job Number:** 20-4738 Patterson **Truss Label:** K04	Cust: R 215 JRef:1X012150003 T26 DrwNo: 308.20.0833.27467 / YK 11/03/2020

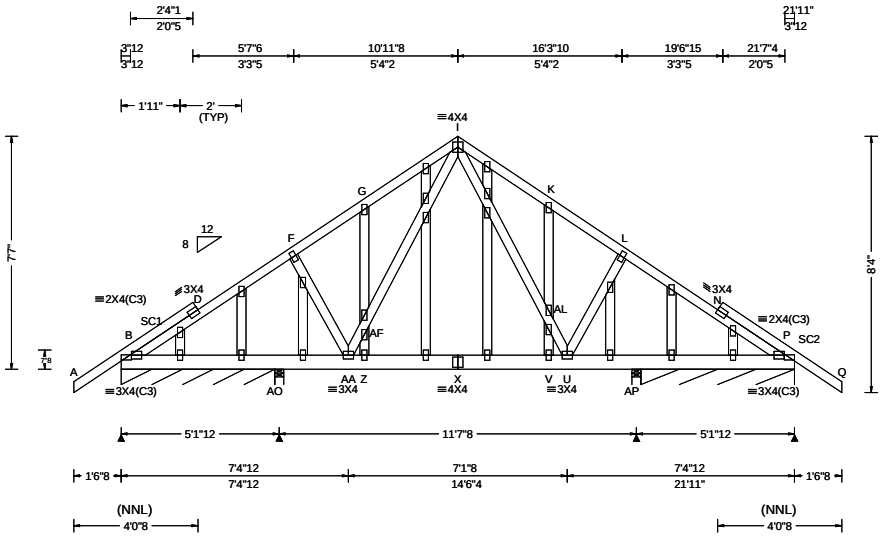

Loading Criteria (psf)

TCLL: 20.00
TCDL: 10.00
BCLL: 0.00
BCDL: 10.00
Des Ld: 40.00
NCBCLL: 10.00
Soffit: 2.00
Load Duration: 1.25
Spacing: 24.0 "

Wind Criteria

Wind Std: ASCE 7-10
Speed: 130 mph
Enclosure: Closed
Risk Category: II
EXP: C Kzt: NA
Mean Height: 15.00 ft
TCDL: 5.0 psf
BCDL: 5.0 psf
MWFRS Parallel Dist: 0 to h/2
C&C Dist a: 3.00 ft
Loc. from endwall: Any
GCpi: 0.18
Wind Duration: 1.60

Snow Criteria (Pg,Pf in PSF)

Pg: NA Ct: NA CAT: NA
Pf: NA Ce: NA
Lu: NA Cs: NA
Snow Duration: NA

Building Code:
FBC 2017 RES
TPI Std: 2014
Rep Fac: Varies by Ld Case
FT/RT:20(0)/10(0)
Plate Type(s):
WAVE

Defl/CSI Criteria

PP Deflection in	loc	L/defl	L/#
VERT(LL): 0.029	J	999	240
VERT(CL): 0.063	J	999	180
HORZ(LL): 0.011	H	-	-
HORZ(TL): 0.023	H	-	-

Creep Factor: 2.0
Max TC CSI: 0.396
Max BC CSI: 0.217
Max Web CSI: 0.692

VIEW Ver: 20.01.01A.0724.11

▲ Maximum Reactions (lbs), or *=PLF

Loc	Gravity R+	/ R-	/ Rh	Non-Gravity / Rw	/ U	/ RL
B*	193	/-	/-	/-	/31	/-
AO	683	/-	/0	/-	/129	/-
AP	647	/-	/0	/-	/122	/-
P*	197	/-	/-	/-	/32	/-

Wind reactions based on MWFRS
B Brg Width = 60.0 Min Req = -
AO Brg Width = 3.5 Min Req = 1.5
AP Brg Width = 3.5 Min Req = 1.5
P Brg Width = 60.0 Min Req = -
Bearings B, AO, AP, & AP are a rigid surface.
Members not listed have forces less than 375#

Maximum Top Chord Forces Per Ply (lbs)

Chords	Tens.	Comp.	Chords	Tens.	Comp.
B - D	126	- 583	I - K	186	- 940
D - F	177	- 860	K - L	185	- 902
F - G	183	- 888	L - N	184	- 895
G - I	185	- 929	N - P	130	- 606

Maximum Bot Chord Forces Per Ply (lbs)

Chords	Tens.	Comp.	Chords	Tens.	Comp.
B -AA	1280	- 263	X - V	609	- 124
AA- Z	610	- 124	V - U	609	- 124
Z - X	609	- 124	U - P	1338	- 273

Maximum Gable Forces Per Ply (lbs)

Gables	Tens.	Comp.	Gables	Tens.	Comp.
AF- Z	53	- 379	AL- K	53	- 388
G -AF	54	- 382	V -AL	54	- 387

Lumber

Top chord: 2x4 SP #2;
Bot chord: 2x6 SP 2400f-2.0E;
Webs: 2x4 SP #3;
Stack Chord: SC1 2x4 SP #2;
Stack Chord: SC2 2x4 SP #2;

Special Loads

------(Lumber Dur.Fac.=1.25 / Plate Dur.Fac.=1.25)

TC: From	64 plf at	-1.54 to	64 plf at	7.06
TC: From	32 plf at	7.06 to	32 plf at	14.85
TC: From	64 plf at	14.85 to	64 plf at	23.46
BC: From	5 plf at	-1.54 to	5 plf at	0.00
BC: From	20 plf at	0.00 to	20 plf at	7.06
BC: From	10 plf at	7.06 to	10 plf at	14.85
BC: From	20 plf at	14.85 to	20 plf at	21.92
BC: From	5 plf at	21.92 to	5 plf at	23.46

BC: 1 lb Conc. Load at 7.06, 9.06,10.85,12.85 14.85

Plating Notes

All plates are 2X4 except as noted.

Loading

Truss designed to support 1-6-0 top chord outlookers and cladding load not to exceed 5.00 PSF one face and 24.0" span opposite face. Top chord must not be cut or notched, unless specified otherwise.

Purlins

In lieu of structural panels use purlins to brace TC @ 24" oc.

Wind

Wind loads and reactions based on MWFRS.

Additional Notes

See DWGS A14015ENC101014 & GBLLETIN0118 for gable wind bracing and other requirements.

Stacked top chord must NOT be notched or cut in area (NNL). Dropped top chord braced at 24" oc intervals. Attach stacked top chord (SC) to dropped top chord in notchable area using 3x4 tie-plates 24" oc. Center plate on stacked/dropped chord interface, plate length perpendicular to chord length. Splice top chord in notchable area using 3x6.

The overall height of this truss excluding overhangs is 7-7-0.

YOONHWAK KIM LICENSE No. 86367 STATE OF FLORIDA PROFESSIONAL ENGINEER

FL REG# 278, Yoonhwak Kim, FL PE #86367
11/03/2020

****WARNING**** READ AND FOLLOW ALL NOTES ON THIS DRAWING!
****IMPORTANT**** FURNISH THIS DRAWING TO ALL CONTRACTORS INCLUDING THE INSTALLERS

Trusses require extreme care in fabricating, handling, shipping, installing and bracing. Refer to and follow the latest edition of BCSI (Building Component Safety Information, by TPI and SBCA) for safety practices prior to performing these functions. Installers shall provide temporary bracing per BCSI. Unless noted otherwise, top chord shall have properly attached structural sheathing and bottom chord shall have a properly attached rigid ceiling. Locations shown for permanent lateral restraint of webs shall have bracing installed per BCSI sections B3, B7, or B10, as applicable. Apply plates to each face of truss and position as shown above and on the Joint Details, unless noted otherwise. Refer to drawings 160A-Z for standard plate positions. Refer to job's General Notes page for additional information.

Alpine, a division of ITW Building Components Group Inc. shall not be responsible for any deviation from this drawing, any failure to build the truss in conformance with ANSI/TPI 1, or for handling, shipping, installation and bracing of trusses. A seal on this drawing or cover page listing this drawing, indicates acceptance of professional engineering responsibility solely for the design shown. The suitability and use of this drawing for any structure is the responsibility of the Building Designer per ANSI/TPI 1 Sec.2.

For more information see these web sites: Alpine: alpineitw.com; TPI: tpinst.org; SBCA: sbcindustry.com; ICC: iccsafe.org; AWC: awc.org

ALPINE AN ITW COMPANY
6750 Forum Drive
Suite 305
Orlando FL, 32821

SEQN: 384555 HIPM FROM: CDM	Ply: 2 Qty: 1	**Job Number:** 20-4738 Patterson **Truss Label:** L01	Cust: R 215 JRef:1X012150003 T27 DrwNo: 308.20.0833.36467 / YK 11/03/2020

2 Complete Trusses Required

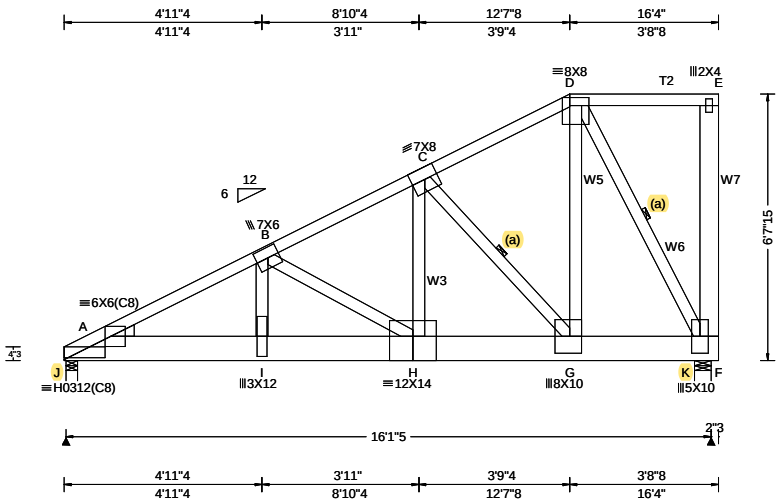

Loading Criteria (psf)

TCLL: 20.00
TCDL: 10.00
BCLL: 0.00
BCDL: 10.00
Des Ld: 40.00
NCBCLL: 0.00
Soffit: 2.00
Load Duration: 1.25
Spacing: 24.0 "

Wind Criteria

Wind Std: ASCE 7-10
Speed: 130 mph
Enclosure: Closed
Risk Category: II
EXP: C Kzt: NA
Mean Height: 15.00 ft
TCDL: 5.0 psf
BCDL: 5.0 psf
MWFRS Parallel Dist: 0 to h/2
C&C Dist a: 3.00 ft
Loc. from endwall: not in 9.00 ft
GCpi: 0.18
Wind Duration: 1.60

Snow Criteria (Pg,Pf in PSF)

Pg: NA Ct: NA CAT: NA
Pf: NA Ce: NA
Lu: NA Cs: NA
Snow Duration: NA

Building Code:
FBC 2017 RES
TPI Std: 2014
Rep Fac: No
FT/RT:20(0)/10(0)
Plate Type(s):
HS, WAVE

Defl/CSI Criteria

PP Deflection in	loc	L/defl	L/#
VERT(LL): 0.133	I	999	240
VERT(CL): 0.264	I	740	180
HORZ(LL): 0.034	B	-	-
HORZ(TL): 0.067	B	-	-

Creep Factor: 2.0
Max TC CSI: 0.502
Max BC CSI: 0.729
Max Web CSI: 0.968

VIEW Ver: 20.01.01A.0724.11

▲Maximum Reactions (lbs)

	Gravity			Non-Gravity		
Loc	R+	/ R-	/ Rh	/ Rw	/ U	/ RL
J	8168	/-	/-	/-	/1164	/-
K	9279	/-	/-	/-	/936	/-

Wind reactions based on MWFRS
J Brg Width = 3.5 Min Req = 3.4
K Brg Width = 4.9 Min Req = 3.8
Bearings J & K are a rigid surface.
Members not listed have forces less than 375#

Maximum Top Chord Forces Per Ply (lbs)

Chords	Tens.	Comp.	Chords	Tens.	Comp.
A - B	1069	- 7723	C - D	299	- 2815
B - C	684	- 5443			

Maximum Bot Chord Forces Per Ply (lbs)

Chords	Tens.	Comp.	Chords	Tens.	Comp.
A - I	6905	- 951	H - G	4654	- 576
I - H	6833	- 939	G - F	2492	- 257

Maximum Web Forces Per Ply (lbs)

Webs	Tens.	Comp.	Webs	Tens.	Comp.
I - B	2143	- 336	C - G	493	- 3342
B - H	402	- 2372	D - G	5307	- 517
H - C	3607	- 499	D - F	501	- 4857

Lumber

Top chord: 2x4 SP M-31; T2 2x4 SP #2;
Bot chord: 2x8 SP 2400f-2.0E;
Webs: 2x4 SP #3; W3,W6 2x4 SP #2;
W5 2x4 SP M-31; W7 2x6 SP 2400f-2.0E;
Lt Wedge: 2x4 SP #3;

Bracing

(a) Continuous lateral restraint equally spaced on member.

Nailnote

Nail Schedule:0.131"x3", min. nails
Top Chord: 1 Row @12.00" o.c.
Bot Chord: 2 Rows @ 3.00" o.c. (Each Row)
Webs : 1 Row @ 4" o.c.
Use equal spacing between rows and stagger nails in each row to avoid splitting.

Special Loads

------(Lumber Dur.Fac.=1.25 / Plate Dur.Fac.=1.25)
TC: From 62 plf at 0.00 to 62 plf at 16.33
BC: From 10 plf at 0.00 to 10 plf at 16.33
BC: 1945 lb Conc. Load at 2.10, 4.10, 6.10, 8.10 10.10
BC: 2591 lb Conc. Load at 11.06
BC: 1975 lb Conc. Load at 13.06,14.40

Purlins

In lieu of structural panels use purlins to brace all flat TC @ 24" oc.

Wind

Wind loads and reactions based on MWFRS.
Right end vertical not exposed to wind pressure.
Right cantilever is exposed to wind

Additional Notes

The overall height of this truss excluding overhang is 6-7-15.

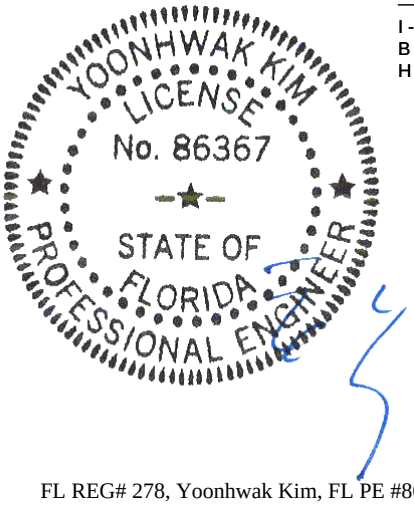

FL REG# 278, Yoonhwak Kim, FL PE #86367
11/03/2020

****WARNING**** READ AND FOLLOW ALL NOTES ON THIS DRAWING!
****IMPORTANT**** FURNISH THIS DRAWING TO ALL CONTRACTORS INCLUDING THE INSTALLERS

Trusses require extreme care in fabricating, handling, shipping, installing and bracing. Refer to and follow the latest edition of BCSI (Building Component Safety Information, by TPI and SBCA) for safety practices prior to performing these functions. Installers shall provide temporary bracing per BCSI. Unless noted otherwise, top chord shall have properly attached structural sheathing and bottom chord shall have a properly attached rigid ceiling. Locations shown for permanent lateral restraint of webs shall have bracing installed per BCSI sections B3, B7, or B10, as applicable. Apply plates to each face of truss and position as shown above and on the Joint Details, unless noted otherwise. Refer to drawings 160A-Z for standard plate positions. Refer to job's General Notes page for additional information.

Alpine, a division of ITW Building Components Group Inc. shall not be responsible for any deviation from this drawing, any failure to build the truss in conformance with ANSI/TPI 1, or for handling, shipping, installation and bracing of trusses. A seal on this drawing or cover page listing this drawing, indicates acceptance of professional engineering responsibility solely for the design shown. The suitability and use of this drawing for any structure is the responsibility of the Building Designer per ANSI/TPI 1 Sec.2.

For more information see these web sites: Alpine: alpineitw.com; TPI: tpinst.org; SBCA: sbcindustry.com; ICC: iccsafe.org; AWC: awc.org

ALPINE AN ITW COMPANY
6750 Forum Drive
Suite 305
Orlando FL, 32821

SEQN: 384585 HIPS FROM: CDM	Ply: 1 Qty: 1	**Job Number:** 20-4738 Patterson **Truss Label:** L02	Cust: R 215 JRef:1X012150003 T28 DrwNo: 308.20.0833.37780 / YK 11/03/2020

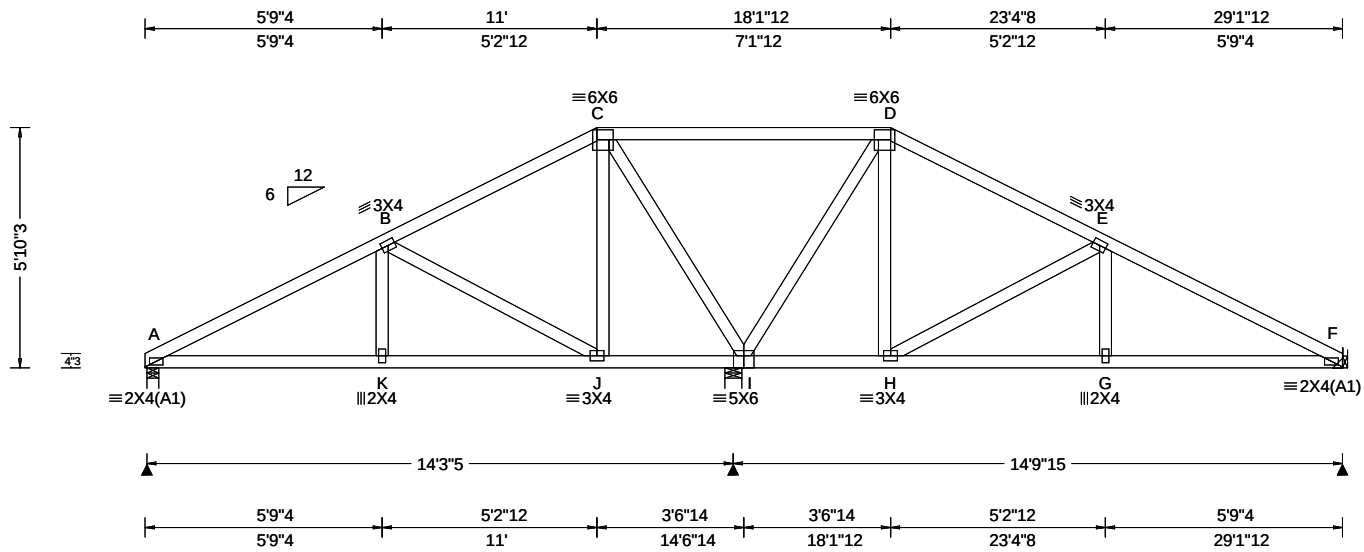

Loading Criteria (psf)

TCLL:	20.00
TCDL:	10.00
BCLL:	0.00
BCDL:	10.00
Des Ld:	40.00
NCBCLL:	10.00
Soffit:	2.00

Load Duration: 1.25
Spacing: 24.0 "

Wind Criteria
Wind Std: ASCE 7-10
Speed: 130 mph
Enclosure: Closed
Risk Category: II
EXP: C Kzt: NA
Mean Height: 15.00 ft
TCDL: 5.0 psf
BCDL: 5.0 psf
MWFRS Parallel Dist: h/2 to h
C&C Dist a: 3.00 ft
Loc. from endwall: not in 9.00 ft
GCpi: 0.18
Wind Duration: 1.60

Snow Criteria (Pg,Pf in PSF)
Pg: NA Ct: NA CAT: NA
Pf: NA Ce: NA
Lu: NA Cs: NA
Snow Duration: NA

Building Code:
FBC 2017 RES
TPI Std: 2014
Rep Fac: Yes
FT/RT:20(0)/10(0)
Plate Type(s):
WAVE

Defl/CSI Criteria

PP Deflection in	loc	L/defl	L/#
VERT(LL): 0.019	K	999	240
VERT(CL): 0.039	G	999	180
HORZ(LL): 0.011	G	-	-
HORZ(TL): 0.022	G	-	-

Creep Factor: 2.0
Max TC CSI: 0.562
Max BC CSI: 0.564
Max Web CSI: 0.665

VIEW Ver: 20.01.01A.0724.11

▲Maximum Reactions (lbs)

Loc	Gravity R+	/ R-	/ Rh	Non-Gravity / Rw	/ U	/ RL
A	519	/-	/-	/313	/87	/139
I	1374	/-	/-	/739	/240	/-
F	549	/-	/-	/355	/91	/-

Wind reactions based on MWFRS
A Brg Width = 3.5 Min Req = 1.5
I Brg Width = 4.9 Min Req = 1.6
F Brg Width = - Min Req = -
Bearings A & I are a rigid surface.
Members not listed have forces less than 375#

Maximum Top Chord Forces Per Ply (lbs)

Chords	Tens.	Comp.	Chords	Tens.	Comp.
A - B	191	- 765	E - F	202	- 805

Maximum Bot Chord Forces Per Ply (lbs)

Chords	Tens.	Comp.	Chords	Tens.	Comp.
A - K	628	- 119	H - G	658	- 117
K - J	624	- 120	G - F	661	- 117

Maximum Web Forces Per Ply (lbs)

Webs	Tens.	Comp.	Webs	Tens.	Comp.
B - J	174	- 544	D - H	404	- 74
C - I	201	- 701	H - E	164	- 510
I - D	230	- 810			

Lumber
Top chord: 2x4 SP #2;
Bot chord: 2x4 SP #2;
Webs: 2x4 SP #3;

Hangers / Ties
(J) Hanger Support Required, by others

Purlins
In lieu of structural panels use purlins to brace all flat TC @ 24" oc.

Wind
Wind loads based on MWFRS with additional C&C member design.

Additional Notes
The overall height of this truss excluding overhang is 5-10-3.

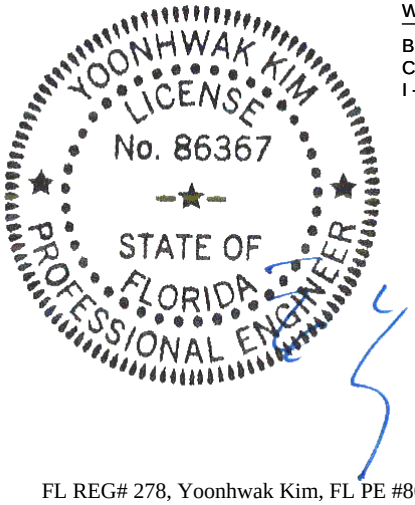

FL REG# 278, Yoonhwak Kim, FL PE #86367
11/03/2020

****WARNING**** READ AND FOLLOW ALL NOTES ON THIS DRAWING!
****IMPORTANT**** FURNISH THIS DRAWING TO ALL CONTRACTORS INCLUDING THE INSTALLERS

Trusses require extreme care in fabricating, handling, shipping, installing and bracing. Refer to and follow the latest edition of BCSI (Building Component Safety Information, by TPI and SBCA) for safety practices prior to performing these functions. Installers shall provide temporary bracing per BCSI. Unless noted otherwise, top chord shall have properly attached structural sheathing and bottom chord shall have a properly attached rigid ceiling. Locations shown for permanent lateral restraint of webs shall have bracing installed per BCSI sections B3, B7, or B10, as applicable. Apply plates to each face of truss and position as shown above and on the Joint Details, unless noted otherwise. Refer to drawings 160A-Z for standard plate positions. Refer to job's General Notes page for additional information.

Alpine, a division of ITW Building Components Group Inc. shall not be responsible for any deviation from this drawing, any failure to build the truss in conformance with ANSI/TPI 1, or for handling, shipping, installation and bracing of trusses. A seal on this drawing or cover page listing this drawing, indicates acceptance of professional engineering responsibility solely for the design shown. The suitability and use of this drawing for any structure is the responsibility of the Building Designer per ANSI/TPI 1 Sec.2.

For more information see these web sites: Alpine: alpineitw.com; TPI: tpinst.org; SBCA: sbcindustry.com; ICC: iccsafe.org; AWC: awc.org

ALPINE AN ITW COMPANY
6750 Forum Drive
Suite 305
Orlando FL, 32821

SEQN: 384579 HIPS FROM: CDM	Ply: 1 Qty: 1	**Job Number:** 20-4738 Patterson **Truss Label:** L03	Cust: R 215 JRef:1X012150003 T8 DrwNo: 308.20.0833.39900 / YK 11/03/2020

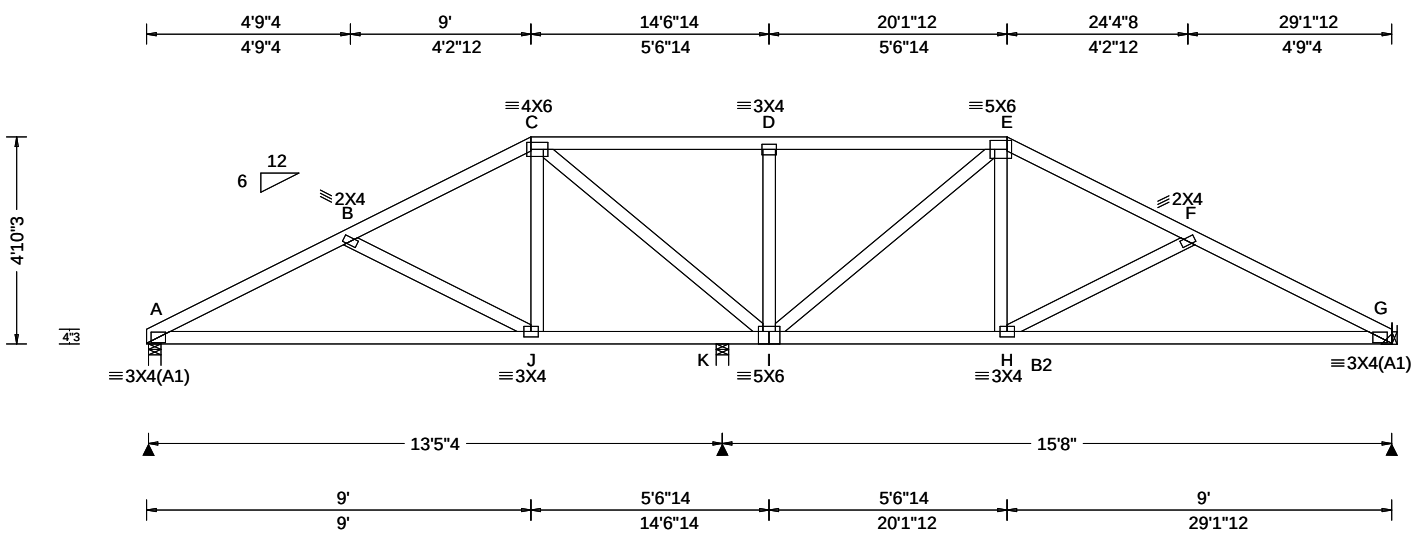

Loading Criteria (psf)

TCLL:	20.00
TCDL:	10.00
BCLL:	0.00
BCDL:	10.00
Des Ld:	40.00
NCBCLL:	10.00
Soffit:	2.00

Load Duration: 1.25
Spacing: 24.0 "

Wind Criteria
Wind Std: ASCE 7-10
Speed: 130 mph
Enclosure: Closed
Risk Category: II
EXP: C Kzt: NA
Mean Height: 15.00 ft
TCDL: 5.0 psf
BCDL: 5.0 psf
MWFRS Parallel Dist: h/2 to h
C&C Dist a: 3.00 ft
Loc. from endwall: not in 9.00 ft
GCpi: 0.18
Wind Duration: 1.60

Snow Criteria (Pg,Pf in PSF)
Pg: NA Ct: NA CAT: NA
Pf: NA Ce: NA
Lu: NA Cs: NA
Snow Duration: NA

Building Code:
FBC 2017 RES
TPI Std: 2014
Rep Fac: Yes
FT/RT:20(0)/10(0)
Plate Type(s):
WAVE

Defl/CSI Criteria

PP Deflection in	loc	L/defl	L/#
VERT(LL): 0.055	D	999	240
VERT(CL): 0.114	D	999	180
HORZ(LL): 0.023	H	-	-
HORZ(TL): 0.047	H	-	-

Creep Factor: 2.0
Max TC CSI: 0.489
Max BC CSI: 0.850
Max Web CSI: 0.277

VIEW Ver: 20.01.01A.0724.11

▲Maximum Reactions (lbs)

Loc	Gravity R+	/ R-	/ Rh	Non-Gravity / Rw	/ U	/ RL
A	832	/-	/-	/498	/142	/114
K	681	/-	/-	/342	/129	/-
G	888	/-	/-	/533	/152	/-

Wind reactions based on MWFRS
A Brg Width = 3.5 Min Req = 1.5
K Brg Width = 3.5 Min Req = 1.5
G Brg Width = - Min Req = -
Bearings A & K are a rigid surface.
Members not listed have forces less than 375#

Maximum Top Chord Forces Per Ply (lbs)

Chords	Tens.	Comp.	Chords	Tens.	Comp.
A - B	381	- 1413	D - E	311	- 896
B - C	319	- 1102	E - F	356	- 1240
C - D	311	- 896	F - G	415	- 1532

Maximum Bot Chord Forces Per Ply (lbs)

Chords	Tens.	Comp.	Chords	Tens.	Comp.
A - J	1228	- 296	I - H	1055	- 200
J - I	1859	- 324	H - G	1325	- 325

Maximum Web Forces Per Ply (lbs)

Webs	Tens.	Comp.	Webs	Tens.	Comp.
D - I	146	- 376	E - H	436	- 60

Lumber
Top chord: 2x4 SP #2;
Bot chord: 2x4 SP M-31; B2 2x4 SP #2;
Webs: 2x4 SP #3;

Hangers / Ties
(J) Hanger Support Required, by others

Purlins
In lieu of structural panels use purlins to brace all flat TC @ 24" oc.

Wind
Wind loads based on MWFRS with additional C&C member design.

Additional Notes
The overall height of this truss excluding overhang is 4-10-3.

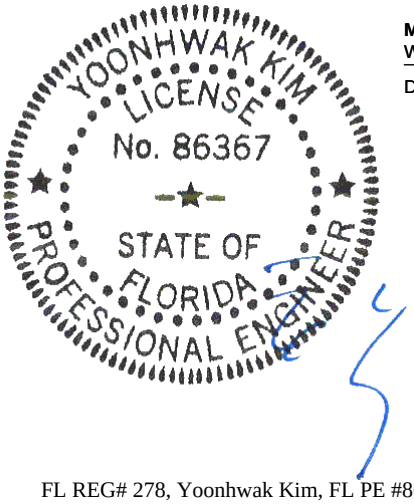

FL REG# 278, Yoonhwak Kim, FL PE #86367
11/03/2020

****WARNING**** READ AND FOLLOW ALL NOTES ON THIS DRAWING!
****IMPORTANT**** FURNISH THIS DRAWING TO ALL CONTRACTORS INCLUDING THE INSTALLERS

Trusses require extreme care in fabricating, handling, shipping, installing and bracing. Refer to and follow the latest edition of BCSI (Building Component Safety Information, by TPI and SBCA) for safety practices prior to performing these functions. Installers shall provide temporary bracing per BCSI. Unless noted otherwise, top chord shall have properly attached structural sheathing and bottom chord shall have a properly attached rigid ceiling. Locations shown for permanent lateral restraint of webs shall have bracing installed per BCSI sections B3, B7, or B10, as applicable. Apply plates to each face of truss and position as shown above and on the Joint Details, unless noted otherwise. Refer to drawings 160A-Z for standard plate positions. Refer to job's General Notes page for additional information.

Alpine, a division of ITW Building Components Group Inc. shall not be responsible for any deviation from this drawing, any failure to build the truss in conformance with ANSI/TPI 1, or for handling, shipping, installation and bracing of trusses. A seal on this drawing or cover page listing this drawing, indicates acceptance of professional engineering responsibility solely for the design shown. The suitability and use of this drawing for any structure is the responsibility of the Building Designer per ANSI/TPI 1 Sec.2.

For more information see these web sites: Alpine: alpineitw.com; TPI: tpinst.org; SBCA: sbcindustry.com; ICC: iccsafe.org; AWC: awc.org

ALPINE AN ITW COMPANY
6750 Forum Drive
Suite 305
Orlando FL, 32821

SEQN: 384590 HIPS FROM: CDM	Ply: 1 Qty: 1	**Job Number:** 20-4738 Patterson **Truss Label:** L04	Cust: R 215 JRef:1X012150003 T25 DrwNo: 308.20.0833.42487 / YK 11/03/2020

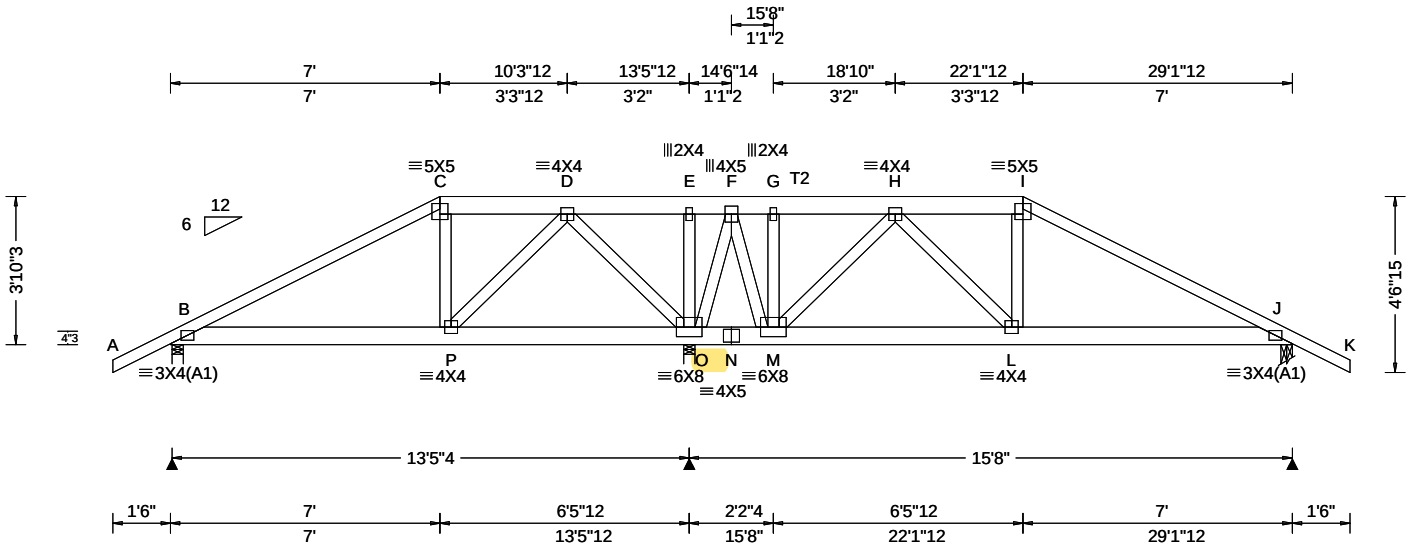

Loading Criteria (psf)

TCLL:	20.00
TCDL:	10.00
BCLL:	0.00
BCDL:	10.00
Des Ld:	40.00
NCBCLL:	10.00
Soffit:	2.00

Load Duration: 1.25
Spacing: 24.0 "

Wind Criteria
Wind Std: ASCE 7-10
Speed: 130 mph
Enclosure: Closed
Risk Category: II
EXP: C Kzt: NA
Mean Height: 15.00 ft
TCDL: 5.0 psf
BCDL: 5.0 psf
MWFRS Parallel Dist: 0 to h/2
C&C Dist a: 3.00 ft
Loc. from endwall: not in 4.50 ft
GCpi: 0.18
Wind Duration: 1.60

Snow Criteria (Pg,Pf in PSF)
Pg: NA Ct: NA CAT: NA
Pf: NA Ce: NA
Lu: NA Cs: NA
Snow Duration: NA

Building Code:
FBC 2017 RES
TPI Std: 2014
Rep Fac: Varies by Ld Case
FT/RT:20(0)/10(0)
Plate Type(s):
WAVE

Defl/CSI Criteria

PP Deflection in	loc	L/defl	L/#
VERT(LL): 0.029	L	999	240
VERT(CL): 0.059	L	999	180
HORZ(LL): 0.007	L	-	-
HORZ(TL): 0.014	L	-	-

Creep Factor: 2.0
Max TC CSI: 0.543
Max BC CSI: 0.186
Max Web CSI: 0.726

VIEW Ver: 20.01.01A.0724.11

▲Maximum Reactions (lbs)

Loc	Gravity R+	/ R-	/ Rh	Non-Gravity / Rw	/ U	/ RL
B	781	/-	/-	/-	/164	/-
O	3865	/-	/-	/-	/802	/-
J	1055	/-	/-	/-	/228	/-

Wind reactions based on MWFRS
B Brg Width = 3.5 Min Req = 1.5
O Brg Width = 3.5 Min Req = 2.8
J Brg Width = 3.5 Min Req = 1.5
Bearings B, O, & J are a rigid surface.
Members not listed have forces less than 375#

Maximum Top Chord Forces Per Ply (lbs)

Chords	Tens.	Comp.	Chords	Tens.	Comp.
B - C	209	- 1024	E - F	1307	- 269
C - D	146	- 830	H - I	275	- 1379
D - E	1307	- 269	I - J	347	- 1611

Maximum Bot Chord Forces Per Ply (lbs)

Chords	Tens.	Comp.	Chords	Tens.	Comp.
B - P	846	- 158	M - L	777	- 180
O - N	154	- 784	L - J	1370	- 281
N - M	154	- 784			

Maximum Web Forces Per Ply (lbs)

Webs	Tens.	Comp.	Webs	Tens.	Comp.
P - D	1324	- 217	F - M	1576	- 314
D - O	396	- 1760	M - H	348	- 1488
E - O	154	- 509	H - L	929	- 143
O - F	374	- 1704			

Lumber

Top chord: 2x4 SP #2; T2 2x6 SP 2400f-2.0E;
Bot chord: 2x6 SP 2400f-2.0E;
Webs: 2x4 SP #3;

Special Loads

------(Lumber Dur.Fac.=1.25 / Plate Dur.Fac.=1.25)

TC: From	62 plf at	-1.50 to	62 plf at	7.00
TC: From	31 plf at	7.00 to	31 plf at	22.15
TC: From	62 plf at	22.15 to	62 plf at	30.65
BC: From	4 plf at	-1.50 to	4 plf at	0.00
BC: From	20 plf at	0.00 to	20 plf at	7.03
BC: From	10 plf at	7.03 to	10 plf at	22.11
BC: From	20 plf at	22.11 to	20 plf at	29.15
BC: From	4 plf at	29.15 to	4 plf at	30.65

TC: 264 lb Conc. Load at 7.03
TC: 190 lb Conc. Load at 9.06,11.06,13.06
TC: 186 lb Conc. Load at 14.57,16.08,18.08,20.08
TC: 260 lb Conc. Load at 22.11
BC: 480 lb Conc. Load at 7.03
BC: 131 lb Conc. Load at 9.06,11.06,13.06
BC: 128 lb Conc. Load at 14.57,16.08,18.08,20.08
BC: 456 lb Conc. Load at 22.11

Purlins

In lieu of structural panels use purlins to brace all flat TC @ 24" oc.

Wind

Wind loads and reactions based on MWFRS.

Additional Notes

The overall height of this truss excluding overhang is 3-10-3.

YOONHWAK KIM
LICENSE
No. 86367
STATE OF FLORIDA
PROFESSIONAL ENGINEER

FL REG# 278, Yoonhwak Kim, FL PE #86367
11/03/2020

****WARNING**** READ AND FOLLOW ALL NOTES ON THIS DRAWING!
****IMPORTANT**** FURNISH THIS DRAWING TO ALL CONTRACTORS INCLUDING THE INSTALLERS

Trusses require extreme care in fabricating, handling, shipping, installing and bracing. Refer to and follow the latest edition of BCSI (Building Component Safety Information, by TPI and SBCA) for safety practices prior to performing these functions. Installers shall provide temporary bracing per BCSI. Unless noted otherwise, top chord shall have properly attached structural sheathing and bottom chord shall have a properly attached rigid ceiling. Locations shown for permanent lateral restraint of webs shall have bracing installed per BCSI sections B3, B7, or B10, as applicable. Apply plates to each face of truss and position as shown above and on the Joint Details, unless noted otherwise. Refer to drawings 160A-Z for standard plate positions. Refer to job's General Notes page for additional information.

Alpine, a division of ITW Building Components Group Inc. shall not be responsible for any deviation from this drawing, any failure to build the truss in conformance with ANSI/TPI 1, or for handling, shipping, installation and bracing of trusses. A seal on this drawing or cover page listing this drawing, indicates acceptance of professional engineering responsibility solely for the design shown. The suitability and use of this drawing for any structure is the responsibility of the Building Designer per ANSI/TPI 1 Sec.2.

For more information see these web sites: Alpine: alpineitw.com; TPI: tpinst.org; SBCA: sbcindustry.com; ICC: iccsafe.org; AWC: awc.org

ALPINE AN ITW COMPANY
6750 Forum Drive
Suite 305
Orlando FL, 32821

SEQN: 384609 MONO FROM: CDM	Ply: 1 Qty: 2	**Job Number:** 20-4738 Patterson **Truss Label:** M01	Cust: R 215 JRef:1X012150003 T53 DrwNo: 308.20.0833.43773 / YK 11/03/2020

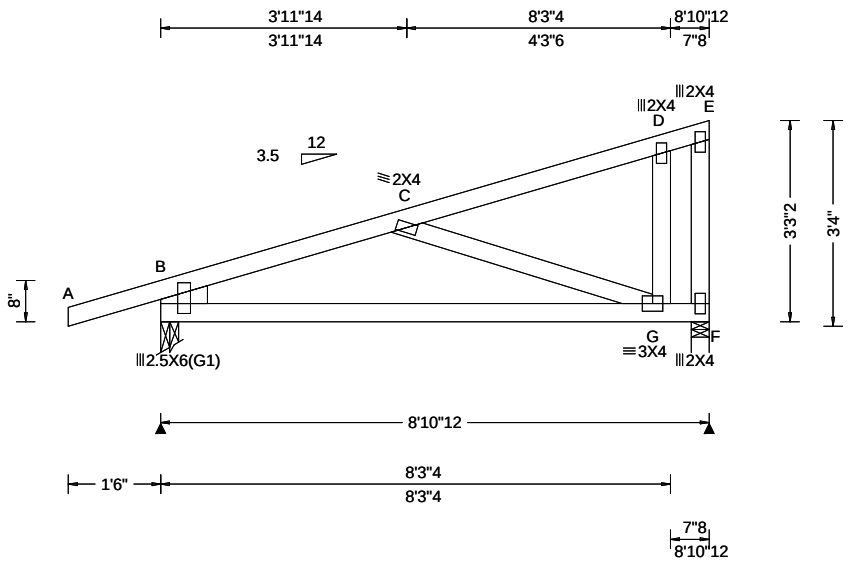

Loading Criteria (psf)

TCLL:	20.00
TCDL:	10.00
BCLL:	0.00
BCDL:	10.00
Des Ld:	40.00
NCBCLL:	10.00
Soffit:	2.00

Load Duration: 1.25
Spacing: 24.0 "

Wind Criteria
Wind Std: ASCE 7-10
Speed: 130 mph
Enclosure: Closed
Risk Category: II
EXP: C Kzt: NA
Mean Height: 15.00 ft
TCDL: 5.0 psf
BCDL: 5.0 psf
MWFRS Parallel Dist: h/2 to h
C&C Dist a: 3.00 ft
Loc. from endwall: not in 9.00 ft
GCpi: 0.18
Wind Duration: 1.60

Snow Criteria (Pg,Pf in PSF)
Pg: NA Ct: NA CAT: NA
Pf: NA Ce: NA
Lu: NA Cs: NA
Snow Duration: NA

Building Code:
FBC 2017 RES
TPI Std: 2014
Rep Fac: Yes
FT/RT:20(0)/10(0)
Plate Type(s):
WAVE

Defl/CSI Criteria

PP Deflection in	loc	L/defl	L/#
VERT(LL): 0.036	G	999	240
VERT(CL): 0.067	G	999	180
HORZ(LL): 0.011	D	-	-
HORZ(TL): 0.027	D	-	-

Creep Factor: 2.0
Max TC CSI: 0.518
Max BC CSI: 0.561
Max Web CSI: 0.215

VIEW Ver: 20.01.01A.0724.11

▲Maximum Reactions (lbs)

Loc	Gravity R+	/ R-	/ Rh	Non-Gravity / Rw	/ U	/ RL
B	465	/-	/-	/295	/82	/87
F	351	/-	/-	/213	/78	/-

Wind reactions based on MWFRS
B Brg Width = 3.5 Min Req = 1.5
F Brg Width = 3.5 Min Req = 1.5
Bearings B & F are a rigid surface.
Members not listed have forces less than 375#

Maximum Top Chord Forces Per Ply (lbs)

Chords	Tens.	Comp.
B - C	136	- 577

Maximum Bot Chord Forces Per Ply (lbs)

Chords	Tens.	Comp.
B - G	525	- 212

Maximum Web Forces Per Ply (lbs)

Webs	Tens.	Comp.
C - G	219	- 529

Lumber

Top chord: 2x4 SP #2;
Bot chord: 2x4 SP #2;
Webs: 2x4 SP #3;
Lt Stub Wedge: 2x4 SP #3;

Wind

Wind loads based on MWFRS with additional C&C member design.

Right end vertical not exposed to wind pressure.

Additional Notes

The overall height of this truss excluding overhang is 3-3-2.

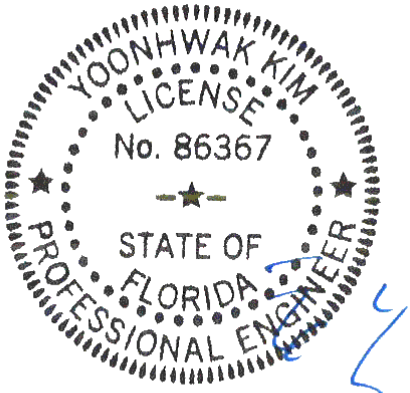

FL REG# 278, Yoonhwak Kim, FL PE #86367
11/03/2020

****WARNING**** READ AND FOLLOW ALL NOTES ON THIS DRAWING!
****IMPORTANT**** FURNISH THIS DRAWING TO ALL CONTRACTORS INCLUDING THE INSTALLERS

Trusses require extreme care in fabricating, handling, shipping, installing and bracing. Refer to and follow the latest edition of BCSI (Building Component Safety Information, by TPI and SBCA) for safety practices prior to performing these functions. Installers shall provide temporary bracing per BCSI. Unless noted otherwise, top chord shall have properly attached structural sheathing and bottom chord shall have a properly attached rigid ceiling. Locations shown for permanent lateral restraint of webs shall have bracing installed per BCSI sections B3, B7, or B10, as applicable. Apply plates to each face of truss and position as shown above and on the Joint Details, unless noted otherwise. Refer to drawings 160A-Z for standard plate positions. Refer to job's General Notes page for additional information.

Alpine, a division of ITW Building Components Group Inc. shall not be responsible for any deviation from this drawing, any failure to build the truss in conformance with ANSI/TPI 1, or for handling, shipping, installation and bracing of trusses. A seal on this drawing or cover page listing this drawing, indicates acceptance of professional engineering responsibility solely for the design shown. The suitability and use of this drawing for any structure is the responsibility of the Building Designer per ANSI/TPI 1 Sec.2.

For more information see these web sites: Alpine: alpineitw.com; TPI: tpinst.org; SBCA: sbcindustry.com; ICC: iccsafe.org; AWC: awc.org

ALPINE AN ITW COMPANY
6750 Forum Drive
Suite 305
Orlando FL, 32821

SEQN: 384606 MONO FROM: CDM	Ply: 1 Qty: 9	**Job Number:** 20-4738 Patterson **Truss Label:** M02	Cust: R 215 JRef:1X012150003 T41 DrwNo: 308.20.0833.45133 / YK 11/03/2020

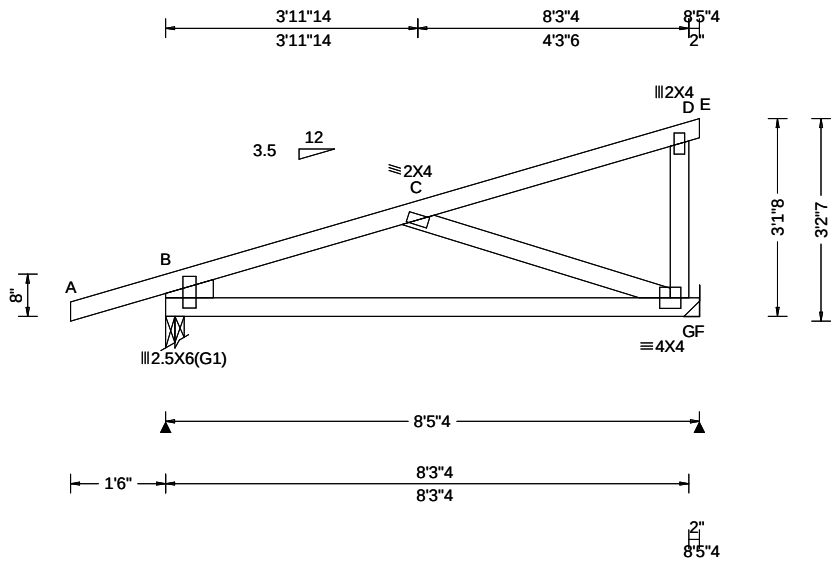

Loading Criteria (psf)	**Wind Criteria**	**Snow Criteria** (Pg,Pf in PSF)	**Defl/CSI Criteria**
TCLL: 20.00 TCDL: 10.00 BCLL: 0.00 BCDL: 10.00 Des Ld: 40.00 NCBCLL: 10.00 Soffit: 2.00 Load Duration: 1.25 Spacing: 24.0 "	Wind Std: ASCE 7-10 Speed: 130 mph Enclosure: Closed Risk Category: II EXP: C Kzt: NA Mean Height: 15.00 ft TCDL: 5.0 psf BCDL: 5.0 psf MWFRS Parallel Dist: h/2 to h C&C Dist a: 3.00 ft Loc. from endwall: not in 9.00 ft GCpi: 0.18 Wind Duration: 1.60	Pg: NA Ct: NA CAT: NA Pf: NA Ce: NA Lu: NA Cs: NA Snow Duration: NA Building Code: FBC 2017 RES TPI Std: 2014 Rep Fac: Yes FT/RT:20(0)/10(0) Plate Type(s): WAVE	PP Deflection in loc L/defl L/# VERT(LL): 0.011 C 999 240 VERT(CL): 0.024 E 999 180 HORZ(LL): 0.006 E - - HORZ(TL): 0.018 E - - Creep Factor: 2.0 Max TC CSI: 0.336 Max BC CSI: 0.631 Max Web CSI: 0.294 VIEW Ver: 20.01.01A.0724.11

▲Maximum Reactions (lbs)

	Gravity			Non-Gravity		
Loc	R+	/ R-	/ Rh	/ Rw	/ U	/ RL
B	447	/-	/-	/284	/79	/83
F	332	/-	/-	/201	/74	/-

Wind reactions based on MWFRS
B Brg Width = 3.5 Min Req = 1.5
F Brg Width = - Min Req = -
Bearing B is a rigid surface.
Members not listed have forces less than 375#

Maximum Top Chord Forces Per Ply (lbs)

Chords	Tens.	Comp.
B - C	141	- 508

Maximum Bot Chord Forces Per Ply (lbs)

Chords	Tens.	Comp.
B - G	457	- 212

Maximum Web Forces Per Ply (lbs)

Webs	Tens.	Comp.
C - G	221	- 466

Lumber

Top chord: 2x4 SP #2;
Bot chord: 2x4 SP #2;
Webs: 2x4 SP #3;
Lt Stub Wedge: 2x4 SP #3;

Hangers / Ties

(J) Hanger Support Required, by others

Wind

Wind loads based on MWFRS with additional C&C member design.

Right end vertical not exposed to wind pressure.

Additional Notes

The overall height of this truss excluding overhang is 3-1-8.

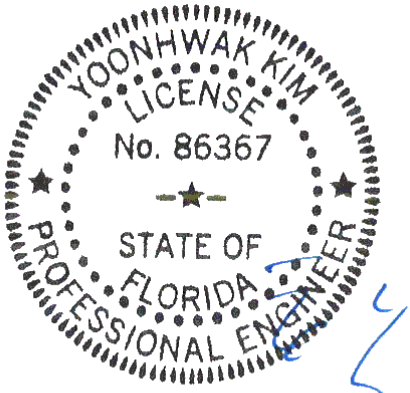

FL REG# 278, Yoonhwak Kim, FL PE #86367
11/03/2020

****WARNING**** READ AND FOLLOW ALL NOTES ON THIS DRAWING!
****IMPORTANT**** FURNISH THIS DRAWING TO ALL CONTRACTORS INCLUDING THE INSTALLERS

Trusses require extreme care in fabricating, handling, shipping, installing and bracing. Refer to and follow the latest edition of BCSI (Building Component Safety Information, by TPI and SBCA) for safety practices prior to performing these functions. Installers shall provide temporary bracing per BCSI. Unless noted otherwise, top chord shall have properly attached structural sheathing and bottom chord shall have a properly attached rigid ceiling. Locations shown for permanent lateral restraint of webs shall have bracing installed per BCSI sections B3, B7, or B10, as applicable. Apply plates to each face of truss and position as shown above and on the Joint Details, unless noted otherwise. Refer to drawings 160A-Z for standard plate positions. Refer to job's General Notes page for additional information.

Alpine, a division of ITW Building Components Group Inc. shall not be responsible for any deviation from this drawing, any failure to build the truss in conformance with ANSI/TPI 1, or for handling, shipping, installation and bracing of trusses. A seal on this drawing or cover page listing this drawing, indicates acceptance of professional engineering responsibility solely for the design shown. The suitability and use of this drawing for any structure is the responsibility of the Building Designer per ANSI/TPI 1 Sec.2.

For more information see these web sites: Alpine: alpineitw.com; TPI: tpinst.org; SBCA: sbcindustry.com; ICC: iccsafe.org; AWC: awc.org

ALPINE AN ITW COMPANY
6750 Forum Drive
Suite 305
Orlando FL, 32821

SEQN: 384624 GABL FROM: CDM	Ply: 1 Qty: 2	**Job Number:** 20-4738 Patterson **Truss Label:** N01	Cust: R 215 JRef:1X012150003 T7 DrwNo: 308.20.0833.57447 / YK 11/03/2020

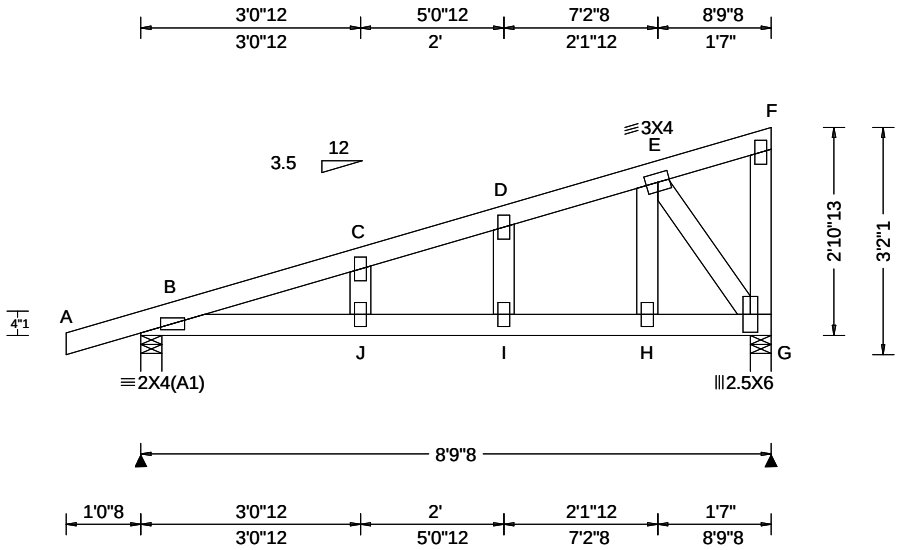

Loading Criteria (psf)

TCLL: 20.00
TCDL: 10.00
BCLL: 0.00
BCDL: 10.00
Des Ld: 40.00
NCBCLL: 10.00
Soffit: 2.00
Load Duration: 1.25
Spacing: 24.0 "

Wind Criteria

Wind Std: ASCE 7-10
Speed: 130 mph
Enclosure: Closed
Risk Category: II
EXP: C Kzt: NA
Mean Height: 17.63 ft
TCDL: 5.0 psf
BCDL: 5.0 psf
MWFRS Parallel Dist: h to 2h
C&C Dist a: 3.00 ft
Loc. from endwall: not in 10.00 ft
GCpi: 0.18
Wind Duration: 1.60

Snow Criteria (Pg,Pf in PSF)

Pg: NA Ct: NA CAT: NA
Pf: NA Ce: NA
Lu: NA Cs: NA
Snow Duration: NA

Building Code:
FBC 2017 RES
TPI Std: 2014
Rep Fac: No
FT/RT:20(0)/10(0)
Plate Type(s):
WAVE

Defl/CSI Criteria

PP Deflection in	loc	L/defl	L/#
VERT(LL): 0.084	J	999	240
VERT(CL): 0.163	J	637	180
HORZ(LL): 0.025	C	-	-
HORZ(TL): 0.049	C	-	-

Creep Factor: 2.0
Max TC CSI: 0.550
Max BC CSI: 0.618
Max Web CSI: 0.144

VIEW Ver: 20.01.01A.0724.11

▲Maximum Reactions (lbs)

Loc	Gravity R+	/ R-	/ Rh	Non-Gravity / Rw	/ U	/ RL
B	473	/-	/-	/257	/189	/142
G	389	/-	/-	/189	/166	/-

Wind reactions based on MWFRS
B Brg Width = 3.5 Min Req = 1.5
G Brg Width = 3.5 Min Req = 1.5
Bearings B & G are a rigid surface.
Members not listed have forces less than 375#

Maximum Top Chord Forces Per Ply (lbs)

Chords	Tens.	Comp.	Chords	Tens.	Comp.
B - C	101	- 482	D - E	140	- 431
C - D	119	- 453			

Maximum Bot Chord Forces Per Ply (lbs)

Chords	Tens.	Comp.	Chords	Tens.	Comp.
B - J	427	- 187	I - H	422	- 184
J - I	424	- 185	H - G	409	- 178

Maximum Web Forces Per Ply (lbs)

Webs	Tens.	Comp.
E - G	295	- 676

Lumber

Top chord: 2x4 SP #2;
Bot chord: 2x4 SP #2;
Webs: 2x4 SP #3;

Plating Notes

All plates are 2X4 except as noted.

Loading

Truss designed to support 1-0-0 top chord outlookers and cladding load not to exceed 5.00 PSF one face and 24.0" span opposite face. Top chord must not be cut or notched, unless specified otherwise.

Wind

Wind loads based on MWFRS with additional C&C member design.

Right end vertical not exposed to wind pressure.

Additional Notes

The overall height of this truss excluding overhang is 2-10-13.

YOONHWAK KIM
LICENSE
No. 86367
STATE OF
FLORIDA
PROFESSIONAL ENGINEER

FL REG# 278, Yoonhwak Kim, FL PE #86367
11/03/2020

****WARNING**** READ AND FOLLOW ALL NOTES ON THIS DRAWING!
****IMPORTANT**** FURNISH THIS DRAWING TO ALL CONTRACTORS INCLUDING THE INSTALLERS

Trusses require extreme care in fabricating, handling, shipping, installing and bracing. Refer to and follow the latest edition of BCSI (Building Component Safety Information, by TPI and SBCA) for safety practices prior to performing these functions. Installers shall provide temporary bracing per BCSI. Unless noted otherwise, top chord shall have properly attached structural sheathing and bottom chord shall have a properly attached rigid ceiling. Locations shown for permanent lateral restraint of webs shall have bracing installed per BCSI sections B3, B7, or B10, as applicable. Apply plates to each face of truss and position as shown above and on the Joint Details, unless noted otherwise. Refer to drawings 160A-Z for standard plate positions. Refer to job's General Notes page for additional information.

Alpine, a division of ITW Building Components Group Inc. shall not be responsible for any deviation from this drawing, any failure to build the truss in conformance with ANSI/TPI 1, or for handling, shipping, installation and bracing of trusses. A seal on this drawing or cover page listing this drawing, indicates acceptance of professional engineering responsibility solely for the design shown. The suitability and use of this drawing for any structure is the responsibility of the Building Designer per ANSI/TPI 1 Sec.2.

For more information see these web sites: Alpine: alpineitw.com; TPI: tpinst.org; SBCA: sbcindustry.com; ICC: iccsafe.org; AWC: awc.org

ALPINE
AN ITW COMPANY
6750 Forum Drive
Suite 305
Orlando FL, 32821

SEQN: 384529 MONO FROM: CDM	Ply: 1 Qty: 5	**Job Number:** 20-4738 Patterson **Truss Label:** N02	Cust: R 215 JRef:1X012150003 T16 DrwNo: 308.20.0833.58950 / YK 11/03/2020

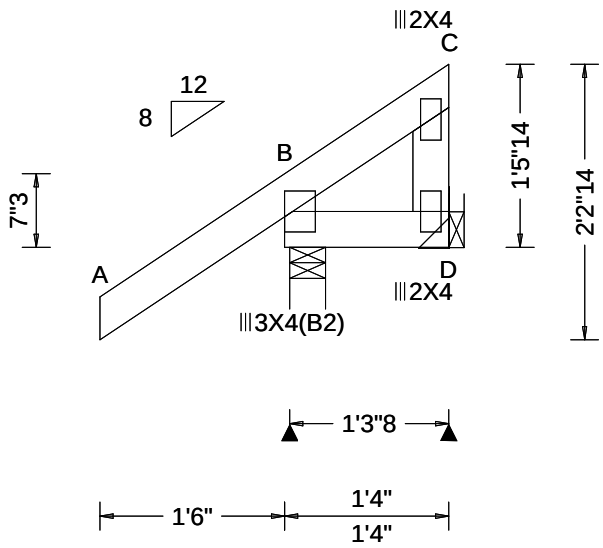

Loading Criteria (psf)	**Wind Criteria**	**Snow Criteria** (Pg,Pf in PSF)	**Defl/CSI Criteria**
TCLL: 20.00 TCDL: 10.00 BCLL: 0.00 BCDL: 10.00 Des Ld: 40.00 NCBCLL: 10.00 Soffit: 2.00 Load Duration: 1.25 Spacing: 24.0 "	Wind Std: ASCE 7-10 Speed: 130 mph Enclosure: Closed Risk Category: II EXP: C Kzt: NA Mean Height: 15.00 ft TCDL: 5.0 psf BCDL: 5.0 psf MWFRS Parallel Dist: 0 to h/2 C&C Dist a: 3.00 ft Loc. from endwall: Any GCpi: 0.18 Wind Duration: 1.60	Pg: NA Ct: NA CAT: NA Pf: NA Ce: NA Lu: NA Cs: NA Snow Duration: NA Building Code: FBC 2017 RES TPI Std: 2014 Rep Fac: Yes FT/RT:20(0)/10(0) Plate Type(s): WAVE	PP Deflection in loc L/defl L/# VERT(LL): NA VERT(CL): NA HORZ(LL): -0.002 C - - HORZ(TL): 0.003 C - - Creep Factor: 2.0 Max TC CSI: 0.203 Max BC CSI: 0.109 Max Web CSI: 0.011 VIEW Ver: 20.01.01A.0724.11

▲Maximum Reactions (lbs)

	Gravity			Non-Gravity		
Loc	R+	/ R-	/ Rh	/ Rw	/ U	/ RL
B	253	/-	/-	/201	/44	/53
D	0	/-38	/-	/35	/42	/-

Wind reactions based on MWFRS
B Brg Width = 3.5 Min Req = 1.5
D Brg Width = - Min Req = -
Bearing B is a rigid surface.
Members not listed have forces less than 375#

Lumber

Top chord: 2x4 SP #2;
Bot chord: 2x4 SP #2;
Webs: 2x4 SP #3;

Wind

Wind loads based on MWFRS with additional C&C member design.

Right end vertical not exposed to wind pressure.

Additional Notes

The overall height of this truss excluding overhang is 1-5-14.

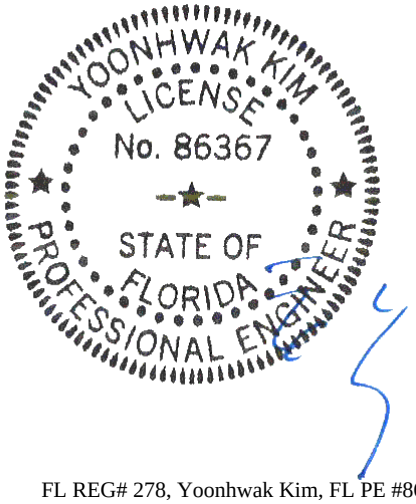

FL REG# 278, Yoonhwak Kim, FL PE #86367
11/03/2020

****WARNING**** READ AND FOLLOW ALL NOTES ON THIS DRAWING!
****IMPORTANT**** FURNISH THIS DRAWING TO ALL CONTRACTORS INCLUDING THE INSTALLERS

Trusses require extreme care in fabricating, handling, shipping, installing and bracing. Refer to and follow the latest edition of BCSI (Building Component Safety Information, by TPI and SBCA) for safety practices prior to performing these functions. Installers shall provide temporary bracing per BCSI. Unless noted otherwise, top chord shall have properly attached structural sheathing and bottom chord shall have a properly attached rigid ceiling. Locations shown for permanent lateral restraint of webs shall have bracing installed per BCSI sections B3, B7, or B10, as applicable. Apply plates to each face of truss and position as shown above and on the Joint Details, unless noted otherwise. Refer to drawings 160A-Z for standard plate positions. Refer to job's General Notes page for additional information.

Alpine, a division of ITW Building Components Group Inc. shall not be responsible for any deviation from this drawing, any failure to build the truss in conformance with ANSI/TPI 1, or for handling, shipping, installation and bracing of trusses. A seal on this drawing or cover page listing this drawing, indicates acceptance of professional engineering responsibility solely for the design shown. The suitability and use of this drawing for any structure is the responsibility of the Building Designer per ANSI/TPI 1 Sec.2.

For more information see these web sites: Alpine: alpineitw.com; TPI: tpinst.org; SBCA: sbcindustry.com; ICC: iccsafe.org; AWC: awc.org

ALPINE AN ITW COMPANY
6750 Forum Drive
Suite 305
Orlando FL, 32821

SEQN: 384536 GABL FROM: CDM	Ply: 1 Qty: 2	**Job Number:** 20-4738 Patterson **Truss Label:** N03	Cust: R 215 JRef:1X012150003 T36 DrwNo: 308.20.0834.00227 / YK 11/03/2020

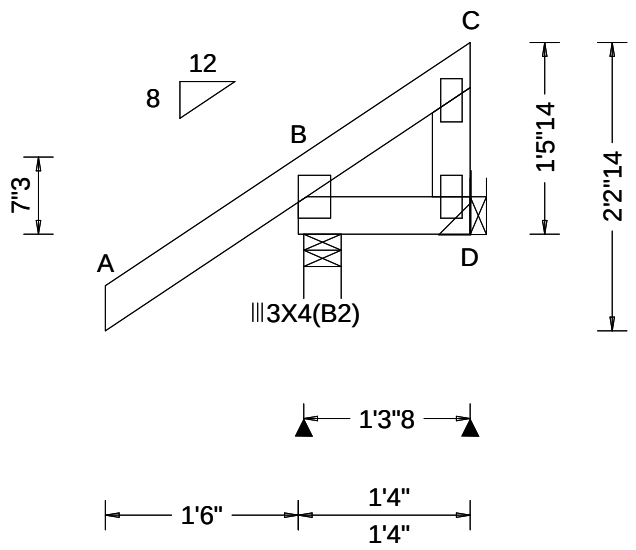

Loading Criteria (psf)	**Wind Criteria**	**Snow Criteria** (Pg,Pf in PSF)	**Defl/CSI Criteria**
TCLL: 20.00 TCDL: 10.00 BCLL: 0.00 BCDL: 10.00 Des Ld: 40.00 NCBCLL: 10.00 Soffit: 2.00 Load Duration: 1.25 Spacing: 24.0 "	Wind Std: ASCE 7-10 Speed: 130 mph Enclosure: Closed Risk Category: II EXP: C Kzt: NA Mean Height: 15.00 ft TCDL: 5.0 psf BCDL: 5.0 psf MWFRS Parallel Dist: 0 to h/2 C&C Dist a: 3.00 ft Loc. from endwall: Any GCpi: 0.18 Wind Duration: 1.60	Pg: NA Ct: NA CAT: NA Pf: NA Ce: NA Lu: NA Cs: NA Snow Duration: NA Building Code: FBC 2017 RES TPI Std: 2014 Rep Fac: Varies by Ld Case FT/RT:20(0)/10(0) Plate Type(s): WAVE	PP Deflection in loc L/defl L/# VERT(LL): NA VERT(CL): NA HORZ(LL): -0.002 C - - HORZ(TL): 0.004 C - - Creep Factor: 2.0 Max TC CSI: 0.270 Max BC CSI: 0.146 Max Web CSI: 0.012 VIEW Ver: 20.01.01A.0724.11

▲Maximum Reactions (lbs)

	Gravity			Non-Gravity		
Loc	R+	/ R-	/ Rh	/ Rw	/ U	/ RL
B	287	/-	/-	/223	/222	/148
D	0	/-47	/-	/38	/49	/-

Wind reactions based on MWFRS
B Brg Width = 3.5 Min Req = 1.5
D Brg Width = - Min Req = -
Bearing B is a rigid surface.
Members not listed have forces less than 375#

Lumber

Top chord: 2x4 SP #2;
Bot chord: 2x4 SP #2;
Webs: 2x4 SP #3;

Plating Notes

All plates are 2X4 except as noted.

Loading

Truss designed to support 1-0-0 top chord outlookers and cladding load not to exceed 5.00 PSF one face and 24.0" span opposite face. Top chord must not be cut or notched, unless specified otherwise.

Wind

Wind loads based on MWFRS with additional C&C member design.

Right end vertical not exposed to wind pressure.

Additional Notes

The overall height of this truss excluding overhang is 1-5-14.

YOONHWAK KIM
LICENSE
No. 86367
STATE OF
FLORIDA
PROFESSIONAL ENGINEER

FL REG# 278, Yoonhwak Kim, FL PE #86367
11/03/2020

****WARNING**** READ AND FOLLOW ALL NOTES ON THIS DRAWING!
****IMPORTANT**** FURNISH THIS DRAWING TO ALL CONTRACTORS INCLUDING THE INSTALLERS

Trusses require extreme care in fabricating, handling, shipping, installing and bracing. Refer to and follow the latest edition of BCSI (Building Component Safety Information, by TPI and SBCA) for safety practices prior to performing these functions. Installers shall provide temporary bracing per BCSI. Unless noted otherwise, top chord shall have properly attached structural sheathing and bottom chord shall have a properly attached rigid ceiling. Locations shown for permanent lateral restraint of webs shall have bracing installed per BCSI sections B3, B7, or B10, as applicable. Apply plates to each face of truss and position as shown above and on the Joint Details, unless noted otherwise. Refer to drawings 160A-Z for standard plate positions. Refer to job's General Notes page for additional information.

Alpine, a division of ITW Building Components Group Inc. shall not be responsible for any deviation from this drawing, any failure to build the truss in conformance with ANSI/TPI 1, or for handling, shipping, installation and bracing of trusses. A seal on this drawing or cover page listing this drawing, indicates acceptance of professional engineering responsibility solely for the design shown. The suitability and use of this drawing for any structure is the responsibility of the Building Designer per ANSI/TPI 1 Sec.2.

For more information see these web sites: Alpine: alpineitw.com; TPI: tpinst.org; SBCA: sbcindustry.com; ICC: iccsafe.org; AWC: awc.org

ALPINE AN ITW COMPANY
6750 Forum Drive
Suite 305
Orlando FL, 32821

SEQN: 384612 MONO FROM: CDM	Ply: 1 Qty: 1	**Job Number:** 20-4738 Patterson **Truss Label:** N04	Cust: R 215 JRef:1X012150003 T38 DrwNo: 308.20.0834.01503 / YK 11/03/2020

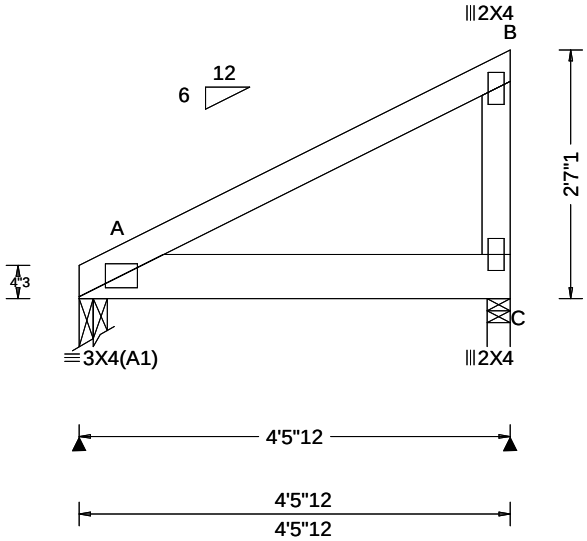

Loading Criteria (psf)
TCLL: 20.00
TCDL: 10.00
BCLL: 0.00
BCDL: 10.00
Des Ld: 40.00
NCBCLL: 10.00
Soffit: 2.00
Load Duration: 1.25
Spacing: 24.0 "

Wind Criteria
Wind Std: ASCE 7-10
Speed: 130 mph
Enclosure: Closed
Risk Category: II
EXP: C Kzt: NA
Mean Height: 15.00 ft
TCDL: 5.0 psf
BCDL: 5.0 psf
MWFRS Parallel Dist: 0 to h/2
C&C Dist a: 3.00 ft
Loc. from endwall: not in 9.00 ft
GCpi: 0.18
Wind Duration: 1.60

Snow Criteria (Pg,Pf in PSF)
Pg: NA Ct: NA CAT: NA
Pf: NA Ce: NA
Lu: NA Cs: NA
Snow Duration: NA

Building Code:
FBC 2017 RES
TPI Std: 2014
Rep Fac: Varies by Ld Case
FT/RT:20(0)/10(0)
Plate Type(s):
WAVE

Defl/CSI Criteria
PP Deflection in loc L/defl L/#
VERT(LL): NA
VERT(CL): NA
HORZ(LL): 0.008 C - -
HORZ(TL): 0.016 C - -
Creep Factor: 2.0
Max TC CSI: 0.354
Max BC CSI: 0.382
Max Web CSI: 0.095

VIEW Ver: 20.01.01A.0724.11

▲Maximum Reactions (lbs)

	Gravity			Non-Gravity		
Loc	R+	/ R-	/ Rh	/ Rw	/ U	/ RL
A	1275	/-	/-	/-	/233	/-
C	486	/-	/-	/-	/97	/-

Wind reactions based on MWFRS
A Brg Width = 3.5 Min Req = 1.5
C Brg Width = 2.8 Min Req = 1.5
Bearings A & C are a rigid surface.
Members not listed have forces less than 375#

Lumber
Top chord: 2x4 SP #2;
Bot chord: 2x6 SP 2400f-2.0E;
Webs: 2x4 SP #3;

Special Loads
------(Lumber Dur.Fac.=1.25 / Plate Dur.Fac.=1.25)
TC: From 62 plf at 0.00 to 62 plf at 4.48
BC: From 10 plf at 0.00 to 10 plf at 4.48
BC: 888 lb Conc. Load at 0.38
BC: 549 lb Conc. Load at 2.38

Wind
Wind loads and reactions based on MWFRS.
Right end vertical not exposed to wind pressure.

Additional Notes
The overall height of this truss excluding overhang is 2-7-1.

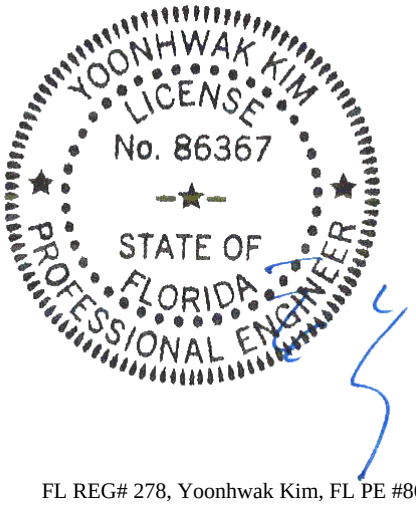

FL REG# 278, Yoonhwak Kim, FL PE #86367
11/03/2020

****WARNING**** READ AND FOLLOW ALL NOTES ON THIS DRAWING!
****IMPORTANT**** FURNISH THIS DRAWING TO ALL CONTRACTORS INCLUDING THE INSTALLERS

Trusses require extreme care in fabricating, handling, shipping, installing and bracing. Refer to and follow the latest edition of BCSI (Building Component Safety Information, by TPI and SBCA) for safety practices prior to performing these functions. Installers shall provide temporary bracing per BCSI. Unless noted otherwise, top chord shall have properly attached structural sheathing and bottom chord shall have a properly attached rigid ceiling. Locations shown for permanent lateral restraint of webs shall have bracing installed per BCSI sections B3, B7, or B10, as applicable. Apply plates to each face of truss and position as shown above and on the Joint Details, unless noted otherwise. Refer to drawings 160A-Z for standard plate positions. Refer to job's General Notes page for additional information.

Alpine, a division of ITW Building Components Group Inc. shall not be responsible for any deviation from this drawing, any failure to build the truss in conformance with ANSI/TPI 1, or for handling, shipping, installation and bracing of trusses. A seal on this drawing or cover page listing this drawing, indicates acceptance of professional engineering responsibility solely for the design shown. The suitability and use of this drawing for any structure is the responsibility of the Building Designer per ANSI/TPI 1 Sec.2.

For more information see these web sites: Alpine: alpineitw.com; TPI: tpinst.org; SBCA: sbcindustry.com; ICC: iccsafe.org; AWC: awc.org

ALPINE AN ITW COMPANY
6750 Forum Drive
Suite 305
Orlando FL, 32821

SEQN: 384401 COMN FROM: CDM	Ply: 1 Qty: 12	**Job Number:** 20-4738 Patterson **Truss Label:** P01	Cust: R 215 JRef:1X012150003 T1 DrwNo: 308.20.0834.02900 / YK 11/03/2020

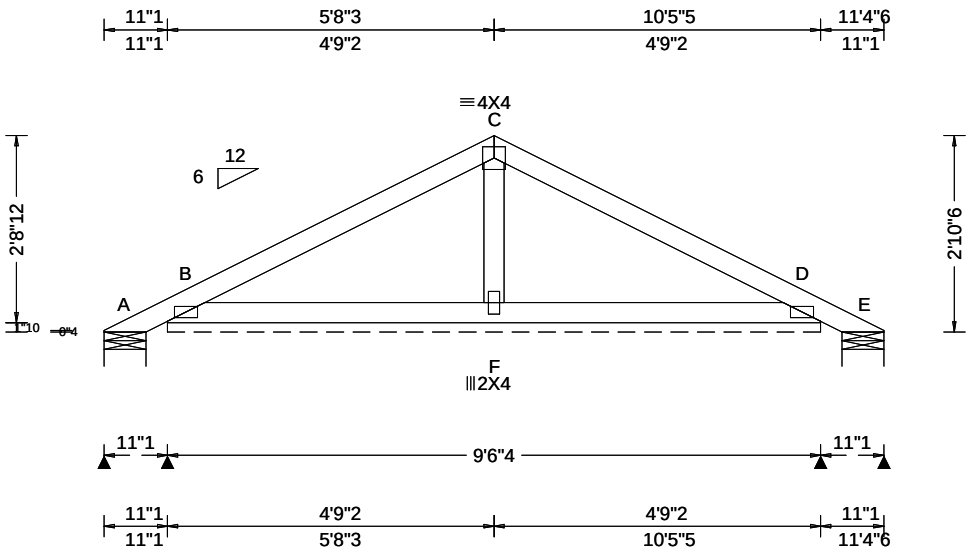

Loading Criteria (psf)

TCLL:	20.00
TCDL:	10.00
BCLL:	0.00
BCDL:	10.00
Des Ld:	40.00
NCBCLL:	10.00
Soffit:	2.00

Load Duration: 1.25
Spacing: 24.0 "

Wind Criteria
Wind Std: ASCE 7-10
Speed: 130 mph
Enclosure: Closed
Risk Category: II
EXP: C Kzt: NA
Mean Height: 19.96 ft
TCDL: 5.0 psf
BCDL: 2.0 psf
MWFRS Parallel Dist: 0 to h/2
C&C Dist a: 3.00 ft
Loc. from endwall: Any
GCpi: 0.18
Wind Duration: 1.60

Snow Criteria (Pg,Pf in PSF)
Pg: NA Ct: NA CAT: NA
Pf: NA Ce: NA
Lu: NA Cs: NA
Snow Duration: NA

Building Code:
FBC 2017 RES
TPI Std: 2014
Rep Fac: Yes
FT/RT:20(0)/10(0)
Plate Type(s):
WAVE

Defl/CSI Criteria

PP Deflection in	loc	L/defl	L/#
VERT(LL): 0.003	F	999	240
VERT(CL): 0.006	F	999	180
HORZ(LL): -0.002	F	-	-
HORZ(TL): 0.003	F	-	-

Creep Factor: 2.0
Max TC CSI: 0.276
Max BC CSI: 0.126
Max Web CSI: 0.030

VIEW Ver: 20.01.01A.0724.11

▲Maximum Reactions (lbs), or *=PLF

	Gravity			Non-Gravity		
Loc	R+	/ R-	/ Rh	/ Rw	/ U	/ RL
A	-	/-102	/-	/59	/93	/69
B*	95	/-	/-	/58	/42	/-
E	-	/-102	/-	/53	/63	/-

Wind reactions based on MWFRS
A Brg Width = 7.3 Min Req = 1.5
B Brg Width = 114 Min Req = -
E Brg Width = 7.3 Min Req = 1.5
Bearings A, B, & E are a rigid surface.
Members not listed have forces less than 375#

Lumber

Top chord: 2x4 SP #2;
Bot chord: 2x4 SP #2;
Webs: 2x4 SP #3;

Plating Notes

All plates are 2X4(A1) except as noted.

Wind

Wind loads based on MWFRS with additional C&C member design.

Additional Notes

Refer to DWG PB160101014 for piggyback details.

The overall height of this truss excluding overhang is 2-10-6.

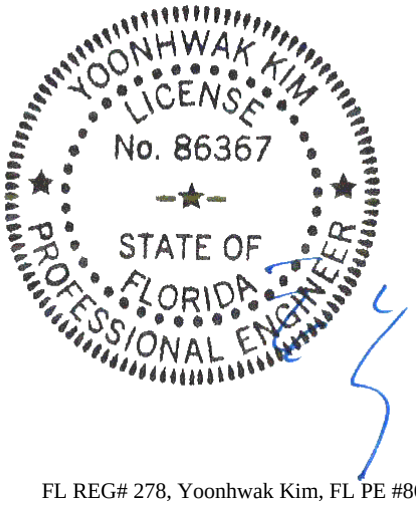

FL REG# 278, Yoonhwak Kim, FL PE #86367
11/03/2020

****WARNING**** READ AND FOLLOW ALL NOTES ON THIS DRAWING!
****IMPORTANT**** FURNISH THIS DRAWING TO ALL CONTRACTORS INCLUDING THE INSTALLERS

Trusses require extreme care in fabricating, handling, shipping, installing and bracing. Refer to and follow the latest edition of BCSI (Building Component Safety Information, by TPI and SBCA) for safety practices prior to performing these functions. Installers shall provide temporary bracing per BCSI. Unless noted otherwise, top chord shall have properly attached structural sheathing and bottom chord shall have a properly attached rigid ceiling. Locations shown for permanent lateral restraint of webs shall have bracing installed per BCSI sections B3, B7, or B10, as applicable. Apply plates to each face of truss and position as shown above and on the Joint Details, unless noted otherwise. Refer to drawings 160A-Z for standard plate positions. Refer to job's General Notes page for additional information.

Alpine, a division of ITW Building Components Group Inc. shall not be responsible for any deviation from this drawing, any failure to build the truss in conformance with ANSI/TPI 1, or for handling, shipping, installation and bracing of trusses. A seal on this drawing or cover page listing this drawing, indicates acceptance of professional engineering responsibility solely for the design shown. The suitability and use of this drawing for any structure is the responsibility of the Building Designer per ANSI/TPI 1 Sec.2.

For more information see these web sites: Alpine: alpineitw.com; TPI: tpinst.org; SBCA: sbcindustry.com; ICC: iccsafe.org; AWC: awc.org

ALPINE AN ITW COMPANY
6750 Forum Drive
Suite 305
Orlando FL, 32821

SEQN: 384407 GABL FROM: CDM	Ply: 1 Qty: 2	**Job Number:** 20-4738 Patterson **Truss Label:** P02	Cust: R 215 JRef:1X012150003 T88 DrwNo: 308.20.0834.03800 / YK 11/03/2020

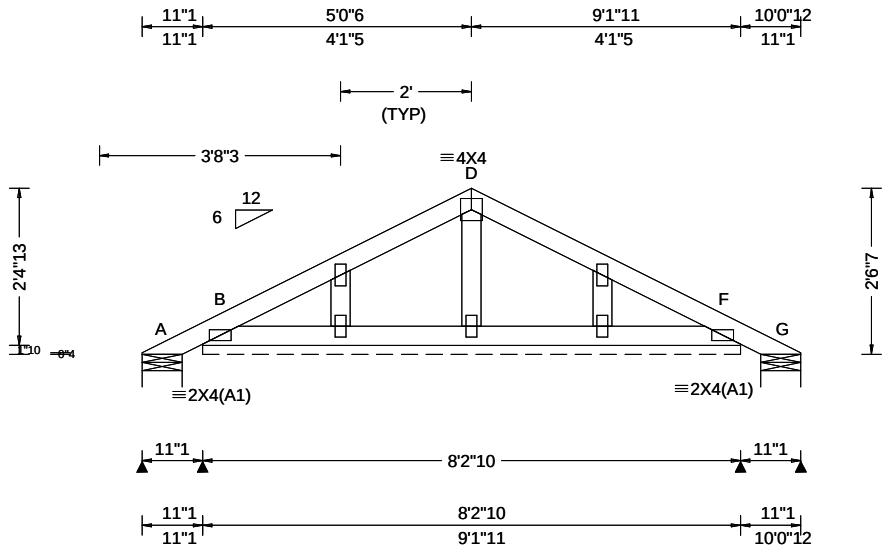

Loading Criteria (psf)	**Wind Criteria**	**Snow Criteria** (Pg,Pf in PSF)	**Defl/CSI Criteria**
TCLL: 20.00 TCDL: 10.00 BCLL: 0.00 BCDL: 10.00 Des Ld: 40.00 NCBCLL: 10.00 Soffit: 2.00 Load Duration: 1.25 Spacing: 24.0 "	Wind Std: ASCE 7-10 Speed: 130 mph Enclosure: Closed Risk Category: II EXP: C Kzt: NA Mean Height: 19.96 ft TCDL: 5.0 psf BCDL: 2.0 psf MWFRS Parallel Dist: h/2 to h C&C Dist a: 3.00 ft Loc. from endwall: not in 13.25 ft GCpi: 0.18 Wind Duration: 1.60	Pg: NA Ct: NA CAT: NA Pf: NA Ce: NA Lu: NA Cs: NA Snow Duration: NA Building Code: FBC 2017 RES TPI Std: 2014 Rep Fac: Varies by Ld Case FT/RT:20(0)/10(0) Plate Type(s): WAVE	PP Deflection in loc L/defl L/# VERT(LL): 0.000 J 999 240 VERT(CL): 0.000 J 999 180 HORZ(LL): -0.000 H - - HORZ(TL): 0.000 H - - Creep Factor: 2.0 Max TC CSI: 0.003 Max BC CSI: 0.013 Max Web CSI: 0.001 VIEW Ver: 20.01.01A.0724.11

▲Maximum Reactions (lbs), or *=PLF

	Gravity			Non-Gravity		
Loc	R+	/ R-	/ Rh	/ Rw	/ U	/ RL
A	3	/-	/-	/5	/-	/-
B*	11	/-	/-	/22	/-	/-
G	3	/-	/-	/5	/-	/-

Wind reactions based on MWFRS

A	Brg Width = 7.3	Min Req =	1.5
B	Brg Width = 98.6	Min Req =	-
G	Brg Width = 7.3	Min Req =	1.5

Bearings A, B, & G are a rigid surface.

Members not listed have forces less than 375#

Lumber

Top chord: 2x4 SP #2;
Bot chord: 2x4 SP #2;
Webs: 2x4 SP #3;

Plating Notes

All plates are 2X4 except as noted.

Loading

Truss designed to support 1-6-0 top chord outlookers and cladding load not to exceed 5.00 PSF one face and 24.0" span opposite face. Top chord must not be cut or notched, unless specified otherwise.

Wind

Wind loads based on MWFRS with additional C&C member design.

Additional Notes

See DWGS A14015ENC101014 & GBLLETIN0118 for gable wind bracing and other requirements.

Refer to DWG PB160101014 for piggyback details.

The overall height of this truss excluding overhang is 2-6-7.

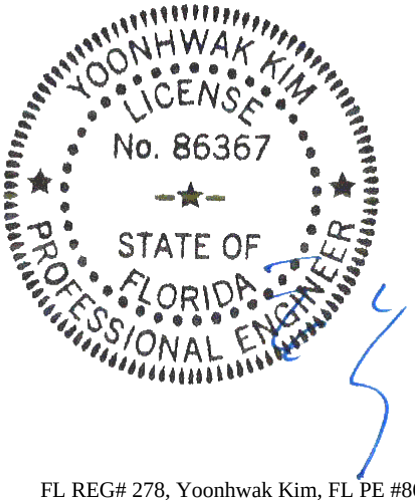

FL REG# 278, Yoonhwak Kim, FL PE #86367
11/03/2020

****WARNING**** READ AND FOLLOW ALL NOTES ON THIS DRAWING!
****IMPORTANT**** FURNISH THIS DRAWING TO ALL CONTRACTORS INCLUDING THE INSTALLERS

Trusses require extreme care in fabricating, handling, shipping, installing and bracing. Refer to and follow the latest edition of BCSI (Building Component Safety Information, by TPI and SBCA) for safety practices prior to performing these functions. Installers shall provide temporary bracing per BCSI. Unless noted otherwise, top chord shall have properly attached structural sheathing and bottom chord shall have a properly attached rigid ceiling. Locations shown for permanent lateral restraint of webs shall have bracing installed per BCSI sections B3, B7, or B10, as applicable. Apply plates to each face of truss and position as shown above and on the Joint Details, unless noted otherwise. Refer to drawings 160A-Z for standard plate positions. Refer to job's General Notes page for additional information.

Alpine, a division of ITW Building Components Group Inc. shall not be responsible for any deviation from this drawing, any failure to build the truss in conformance with ANSI/TPI 1, or for handling, shipping, installation and bracing of trusses. A seal on this drawing or cover page listing this drawing, indicates acceptance of professional engineering responsibility solely for the design shown. The suitability and use of this drawing for any structure is the responsibility of the Building Designer per ANSI/TPI 1 Sec.2.

For more information see these web sites: Alpine: alpineitw.com; TPI: tpinst.org; SBCA: sbcindustry.com; ICC: iccsafe.org; AWC: awc.org

ALPINE AN ITW COMPANY
6750 Forum Drive
Suite 305
Orlando FL, 32821

SEQN: 384494 COMN FROM: CDM	Ply: 1 Qty: 16	**Job Number:** 20-4738 Patterson **Truss Label:** P03	Cust: R 215 JRef:1X012150003 T46 DrwNo: 308.20.0834.04780 / YK 11/03/2020

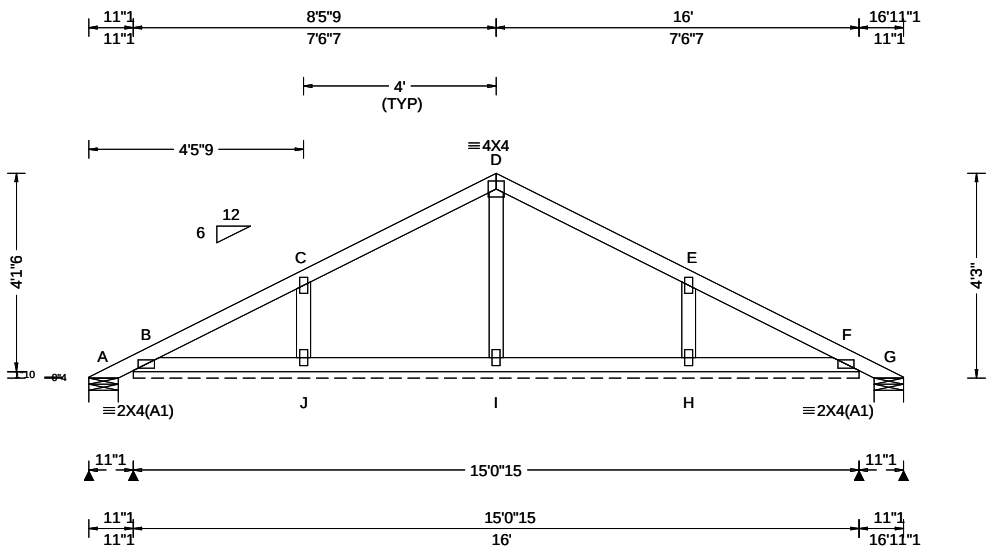

Loading Criteria (psf)	**Wind Criteria**	**Snow Criteria** (Pg,Pf in PSF)	**Defl/CSI Criteria**
TCLL: 20.00 TCDL: 10.00 BCLL: 0.00 BCDL: 10.00 Des Ld: 40.00 NCBCLL: 10.00 Soffit: 2.00 Load Duration: 1.25 Spacing: 24.0 "	Wind Std: ASCE 7-10 Speed: 130 mph Enclosure: Closed Risk Category: II EXP: C Kzt: NA Mean Height: 20.66 ft TCDL: 5.0 psf BCDL: 2.0 psf MWFRS Parallel Dist: h/2 to h C&C Dist a: 3.00 ft Loc. from endwall: not in 9.00 ft GCpi: 0.18 Wind Duration: 1.60	Pg: NA Ct: NA CAT: NA Pf: NA Ce: NA Lu: NA Cs: NA Snow Duration: NA Building Code: FBC 2017 RES TPI Std: 2014 Rep Fac: Yes FT/RT:20(0)/10(0) Plate Type(s): WAVE	PP Deflection in loc L/defl L/# VERT(LL): 0.001 H 999 240 VERT(CL): 0.001 H 999 180 HORZ(LL): 0.001 H - - HORZ(TL): 0.001 H - - Creep Factor: 2.0 Max TC CSI: 0.247 Max BC CSI: 0.082 Max Web CSI: 0.056 VIEW Ver: 20.01.01A.0724.11

▲Maximum Reactions (lbs), or *=PLF

	Gravity			Non-Gravity		
Loc	R+	/ R-	/ Rh	/ Rw	/ U	/ RL
A	-	/-3	/-	/49	/48	/104
B*	72	/-	/-	/49	/22	/-
G	-	/-3	/-	/4	/2	/-
J		/-118				
H		/-118				

Wind reactions based on MWFRS
A Brg Width = 7.3 Min Req = 1.5
B Brg Width = 180 Min Req = -
G Brg Width = 7.3 Min Req = 1.5
Bearings A, B, & G are a rigid surface.
Members not listed have forces less than 375#

Lumber

Top chord: 2x4 SP #2;
Bot chord: 2x4 SP #2;
Webs: 2x4 SP #3;

Plating Notes

All plates are 2X4 except as noted.

Wind

Wind loads based on MWFRS with additional C&C member design.

Additional Notes

Refer to DWG PB160101014 for piggyback details.

The overall height of this truss excluding overhang is 4-3-0.

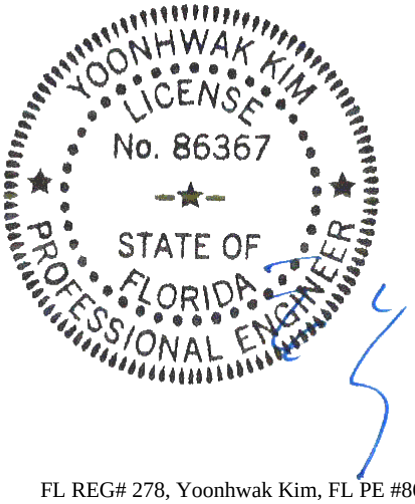

FL REG# 278, Yoonhwak Kim, FL PE #86367
11/03/2020

****WARNING**** READ AND FOLLOW ALL NOTES ON THIS DRAWING!
****IMPORTANT**** FURNISH THIS DRAWING TO ALL CONTRACTORS INCLUDING THE INSTALLERS

Trusses require extreme care in fabricating, handling, shipping, installing and bracing. Refer to and follow the latest edition of BCSI (Building Component Safety Information, by TPI and SBCA) for safety practices prior to performing these functions. Installers shall provide temporary bracing per BCSI. Unless noted otherwise, top chord shall have properly attached structural sheathing and bottom chord shall have a properly attached rigid ceiling. Locations shown for permanent lateral restraint of webs shall have bracing installed per BCSI sections B3, B7, or B10, as applicable. Apply plates to each face of truss and position as shown above and on the Joint Details, unless noted otherwise. Refer to drawings 160A-Z for standard plate positions. Refer to job's General Notes page for additional information.

Alpine, a division of ITW Building Components Group Inc. shall not be responsible for any deviation from this drawing, any failure to build the truss in conformance with ANSI/TPI 1, or for handling, shipping, installation and bracing of trusses. A seal on this drawing or cover page listing this drawing, indicates acceptance of professional engineering responsibility solely for the design shown. The suitability and use of this drawing for any structure is the responsibility of the Building Designer per ANSI/TPI 1 Sec.2.

For more information see these web sites: Alpine: alpineitw.com; TPI: tpinst.org; SBCA: sbcindustry.com; ICC: iccsafe.org; AWC: awc.org

ALPINE AN ITW COMPANY
6750 Forum Drive
Suite 305
Orlando FL, 32821

SEQN: 384509 GABL FROM: CDM	Ply: 1 Qty: 2	**Job Number:** 20-4738 Patterson **Truss Label:** P04	Cust: R 215 JRef:1X012150003 T34 DrwNo: 308.20.0834.05700 / YK 11/03/2020

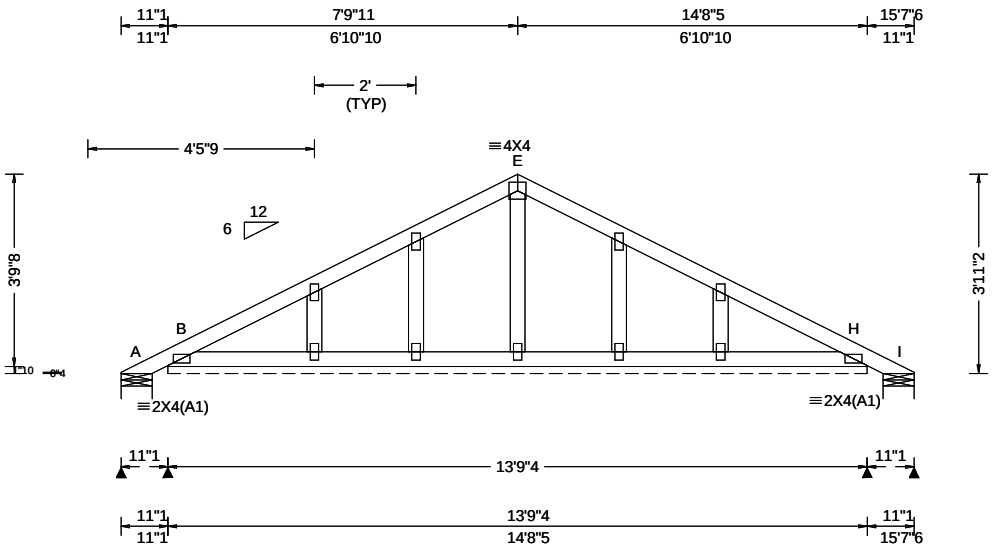

Loading Criteria (psf)	**Wind Criteria**	**Snow Criteria** (Pg,Pf in PSF)	**Defl/CSI Criteria**
TCLL: 20.00 TCDL: 10.00 BCLL: 0.00 BCDL: 10.00 Des Ld: 40.00 NCBCLL: 10.00 Soffit: 2.00 Load Duration: 1.25 Spacing: 24.0 "	Wind Std: ASCE 7-10 Speed: 130 mph Enclosure: Closed Risk Category: II EXP: C Kzt: NA Mean Height: 20.66 ft TCDL: 5.0 psf BCDL: 2.0 psf MWFRS Parallel Dist: h/2 to h C&C Dist a: 3.00 ft Loc. from endwall: not in 13.25 ft GCpi: 0.18 Wind Duration: 1.60	Pg: NA Ct: NA CAT: NA Pf: NA Ce: NA Lu: NA Cs: NA Snow Duration: NA Building Code: FBC 2017 RES TPI Std: 2014 Rep Fac: Varies by Ld Case FT/RT:20(0)/10(0) Plate Type(s): WAVE	PP Deflection in loc L/defl L/# VERT(LL): 0.000 N 999 240 VERT(CL): 0.001 N 999 180 HORZ(LL): -0.000 J - - HORZ(TL): 0.000 J - - Creep Factor: 2.0 Max TC CSI: 0.006 Max BC CSI: 0.021 Max Web CSI: 0.001 VIEW Ver: 20.01.01A.0724.11

▲Maximum Reactions (lbs), or *=PLF

	Gravity			Non-Gravity		
Loc	R+	/ R-	/ Rh	/ Rw	/ U	/ RL
A	1	/-	/-	/1	/-	/-
B*	11	/-	/-	/22	/-	/-
I	1	/-	/-	/1	/-	/-

Wind reactions based on MWFRS

A	Brg Width = 7.3	Min Req = 1.5
B	Brg Width = 165	Min Req = -
I	Brg Width = 7.3	Min Req = 1.5

Bearings A, B, & I are a rigid surface.

Members not listed have forces less than 375#

Lumber

Top chord: 2x4 SP #2;
Bot chord: 2x4 SP #2;
Webs: 2x4 SP #3;

Plating Notes

All plates are 2X4 except as noted.

Loading

Truss designed to support 1-6-0 top chord outlookers and cladding load not to exceed 5.00 PSF one face and 24.0" span opposite face. Top chord must not be cut or notched, unless specified otherwise.

Wind

Wind loads based on MWFRS with additional C&C member design.

Additional Notes

See DWGS A14030ENC101014 & GBLLETIN0118 for gable wind bracing and other requirements.

Refer to DWG PB160101014 for piggyback details.

The overall height of this truss excluding overhang is 3-11-2.

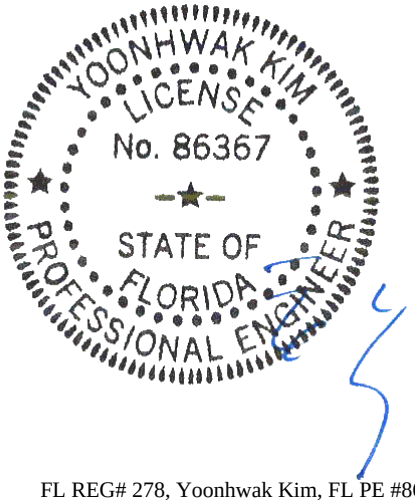

FL REG# 278, Yoonhwak Kim, FL PE #86367
11/03/2020

****WARNING**** READ AND FOLLOW ALL NOTES ON THIS DRAWING!
****IMPORTANT**** FURNISH THIS DRAWING TO ALL CONTRACTORS INCLUDING THE INSTALLERS

Trusses require extreme care in fabricating, handling, shipping, installing and bracing. Refer to and follow the latest edition of BCSI (Building Component Safety Information, by TPI and SBCA) for safety practices prior to performing these functions. Installers shall provide temporary bracing per BCSI. Unless noted otherwise, top chord shall have properly attached structural sheathing and bottom chord shall have a properly attached rigid ceiling. Locations shown for permanent lateral restraint of webs shall have bracing installed per BCSI sections B3, B7, or B10, as applicable. Apply plates to each face of truss and position as shown above and on the Joint Details, unless noted otherwise. Refer to drawings 160A-Z for standard plate positions. Refer to job's General Notes page for additional information.

Alpine, a division of ITW Building Components Group Inc. shall not be responsible for any deviation from this drawing, any failure to build the truss in conformance with ANSI/TPI 1, or for handling, shipping, installation and bracing of trusses. A seal on this drawing or cover page listing this drawing, indicates acceptance of professional engineering responsibility solely for the design shown. The suitability and use of this drawing for any structure is the responsibility of the Building Designer per ANSI/TPI 1 Sec.2.

For more information see these web sites: Alpine: alpineitw.com; TPI: tpinst.org; SBCA: sbcindustry.com; ICC: iccsafe.org; AWC: awc.org

ALPINE AN ITW COMPANY
6750 Forum Drive
Suite 305
Orlando FL, 32821

SEQN: 384600 VAL FROM: CDM	Ply: 1 Qty: 1	**Job Number:** 20-4738 Patterson **Truss Label:** V1	Cust: R 215 JRef:1X012150003 T40 DrwNo: 308.20.0834.06703 / YK 11/03/2020

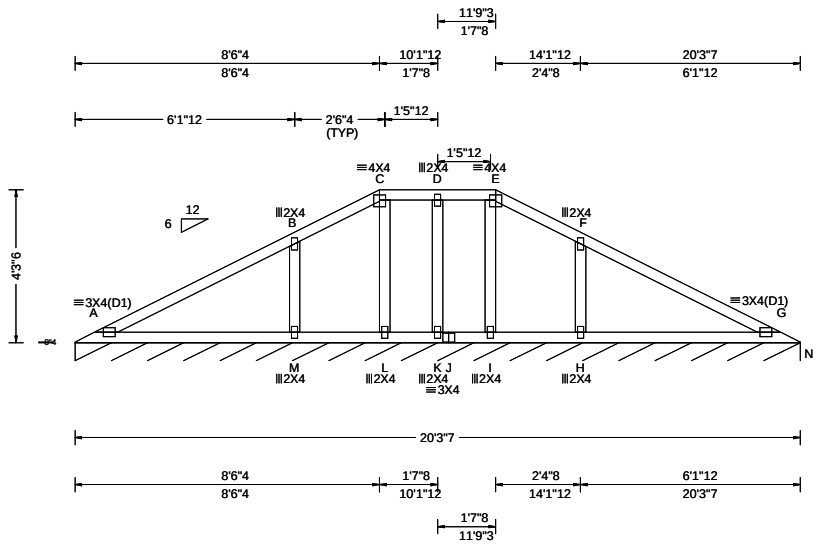

Loading Criteria (psf)	Wind Criteria	Snow Criteria (Pg,Pf in PSF)	Defl/CSI Criteria	▲ Maximum Reactions (lbs), or *=PLF
TCLL: 20.00 TCDL: 10.00 BCLL: 0.00 BCDL: 10.00 Des Ld: 40.00 NCBCLL: 10.00 Soffit: 2.00 Load Duration: 1.25 Spacing: 24.0 "	Wind Std: ASCE 7-10 Speed: 130 mph Enclosure: Closed Risk Category: II EXP: C Kzt: NA Mean Height: 15.00 ft TCDL: 5.0 psf BCDL: 5.0 psf MWFRS Parallel Dist: h/2 to h C&C Dist a: 3.00 ft Loc. from endwall: not in 9.00 ft GCpi: 0.18 Wind Duration: 1.60	Pg: NA Ct: NA CAT: NA Pf: NA Ce: NA Lu: NA Cs: NA Snow Duration: NA Building Code: FBC 2017 RES TPI Std: 2014 Rep Fac: Yes FT/RT:20(0)/10(0) Plate Type(s): WAVE	PP Deflection in loc L/defl L/# VERT(LL): 0.024 M 999 240 VERT(CL): 0.049 M 999 180 HORZ(LL): 0.009 M - - HORZ(TL): 0.018 M - - Creep Factor: 2.0 Max TC CSI: 0.464 Max BC CSI: 0.284 Max Web CSI: 0.074 VIEW Ver: 20.01.01A.0724.11	Gravity / Non-Gravity Loc R+ / R- / Rh / Rw / U / RL N* 82 /- /- /42 /13 /5 Wind reactions based on MWFRS N Brg Width = 243 Min Req = - Bearing A is a rigid surface. Members not listed have forces less than 375#

Lumber

Top chord: 2x4 SP #2;
Bot chord: 2x4 SP #2;
Webs: 2x4 SP #3;

Purlins

In lieu of structural panels use purlins to brace all flat TC @ 24" oc.

Wind

Wind loads based on MWFRS with additional C&C member design.

Additional Notes

See DWG VAL160101014 for valley details.

The overall height of this truss excluding overhang is 4-3-6.

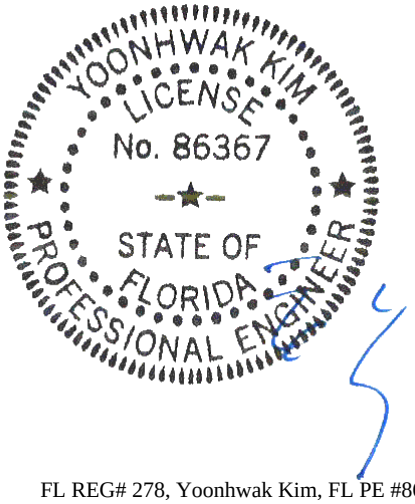

FL REG# 278, Yoonhwak Kim, FL PE #86367
11/03/2020

****WARNING**** READ AND FOLLOW ALL NOTES ON THIS DRAWING!
****IMPORTANT**** FURNISH THIS DRAWING TO ALL CONTRACTORS INCLUDING THE INSTALLERS

Trusses require extreme care in fabricating, handling, shipping, installing and bracing. Refer to and follow the latest edition of BCSI (Building Component Safety Information, by TPI and SBCA) for safety practices prior to performing these functions. Installers shall provide temporary bracing per BCSI. Unless noted otherwise, top chord shall have properly attached structural sheathing and bottom chord shall have a properly attached rigid ceiling. Locations shown for permanent lateral restraint of webs shall have bracing installed per BCSI sections B3, B7, or B10, as applicable. Apply plates to each face of truss and position as shown above and on the Joint Details, unless noted otherwise. Refer to drawings 160A-Z for standard plate positions. Refer to job's General Notes page for additional information.

Alpine, a division of ITW Building Components Group Inc. shall not be responsible for any deviation from this drawing, any failure to build the truss in conformance with ANSI/TPI 1, or for handling, shipping, installation and bracing of trusses. A seal on this drawing or cover page listing this drawing, indicates acceptance of professional engineering responsibility solely for the design shown. The suitability and use of this drawing for any structure is the responsibility of the Building Designer per ANSI/TPI 1 Sec.2.

For more information see these web sites: Alpine: alpineitw.com; TPI: tpinst.org; SBCA: sbcindustry.com; ICC: iccsafe.org; AWC: awc.org

ALPINE
AN ITW COMPANY
6750 Forum Drive
Suite 305
Orlando FL, 32821

SEQN: 384603 VAL FROM: CDM	Ply: 1 Qty: 1	**Job Number:** 20-4738 Patterson **Truss Label:** V2	Cust: R 215 JRef:1X012150003 T48 DrwNo: 308.20.0834.07600 / YK 11/03/2020

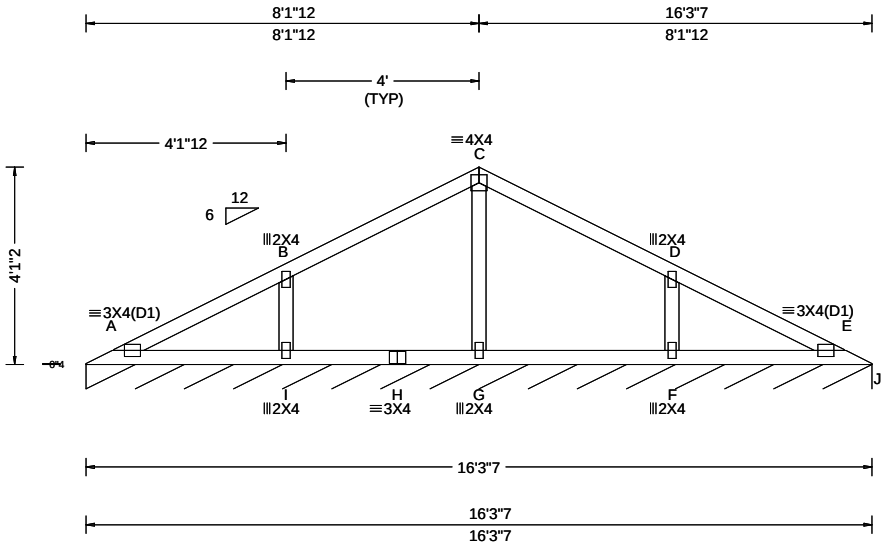

Loading Criteria (psf)	**Wind Criteria**	**Snow Criteria** (Pg,Pf in PSF)	**Defl/CSI Criteria**
TCLL: 20.00 TCDL: 10.00 BCLL: 0.00 BCDL: 10.00 Des Ld: 40.00 NCBCLL: 10.00 Soffit: 2.00 Load Duration: 1.25 Spacing: 24.0 "	Wind Std: ASCE 7-10 Speed: 130 mph Enclosure: Closed Risk Category: II EXP: C Kzt: NA Mean Height: 15.00 ft TCDL: 5.0 psf BCDL: 5.0 psf MWFRS Parallel Dist: h to 2h C&C Dist a: 3.00 ft Loc. from endwall: not in 9.00 ft GCpi: 0.18 Wind Duration: 1.60	Pg: NA Ct: NA CAT: NA Pf: NA Ce: NA Lu: NA Cs: NA Snow Duration: NA Building Code: FBC 2017 RES TPI Std: 2014 Rep Fac: Yes FT/RT:20(0)/10(0) Plate Type(s): WAVE	PP Deflection in loc L/defl L/# VERT(LL): 0.006 I 999 240 VERT(CL): 0.013 I 999 180 HORZ(LL): -0.002 F - - HORZ(TL): 0.004 F - - Creep Factor: 2.0 Max TC CSI: 0.303 Max BC CSI: 0.158 Max Web CSI: 0.080 VIEW Ver: 20.01.01A.0724.11

▲ Maximum Reactions (lbs), or *=PLF

	Gravity			Non-Gravity		
Loc	R+	/ R-	/ Rh	/ Rw	/ U	/ RL
J*	82	/-	/-	/42	/1	/6

Wind reactions based on MWFRS
J Brg Width = 195 Min Req = -
Bearing A is a rigid surface.
Members not listed have forces less than 375#

Lumber

Top chord: 2x4 SP #2;
Bot chord: 2x4 SP #2;
Webs: 2x4 SP #3;

Wind

Wind loads based on MWFRS with additional C&C member design.

Additional Notes

See DWG VAL160101014 for valley details.

The overall height of this truss excluding overhang is 4-1-2.

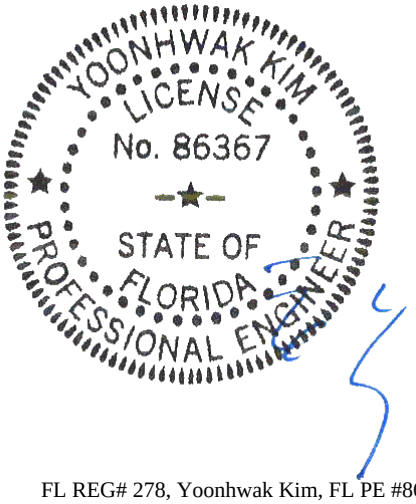

FL REG# 278, Yoonhwak Kim, FL PE #86367
11/03/2020

****WARNING**** READ AND FOLLOW ALL NOTES ON THIS DRAWING!
****IMPORTANT**** FURNISH THIS DRAWING TO ALL CONTRACTORS INCLUDING THE INSTALLERS

Trusses require extreme care in fabricating, handling, shipping, installing and bracing. Refer to and follow the latest edition of BCSI (Building Component Safety Information, by TPI and SBCA) for safety practices prior to performing these functions. Installers shall provide temporary bracing per BCSI. Unless noted otherwise, top chord shall have properly attached structural sheathing and bottom chord shall have a properly attached rigid ceiling. Locations shown for permanent lateral restraint of webs shall have bracing installed per BCSI sections B3, B7, or B10, as applicable. Apply plates to each face of truss and position as shown above and on the Joint Details, unless noted otherwise. Refer to drawings 160A-Z for standard plate positions. Refer to job's General Notes page for additional information.

Alpine, a division of ITW Building Components Group Inc. shall not be responsible for any deviation from this drawing, any failure to build the truss in conformance with ANSI/TPI 1, or for handling, shipping, installation and bracing of trusses. A seal on this drawing or cover page listing this drawing, indicates acceptance of professional engineering responsibility solely for the design shown. The suitability and use of this drawing for any structure is the responsibility of the Building Designer per ANSI/TPI 1 Sec.2.

For more information see these web sites: Alpine: alpineitw.com; TPI: tpinst.org; SBCA: sbcindustry.com; ICC: iccsafe.org; AWC: awc.org

ALPINE AN ITW COMPANY
6750 Forum Drive
Suite 305
Orlando FL, 32821

SEQN: 384595 VAL FROM: CDM	Ply: 1 Qty: 1	**Job Number:** 20-4738 Patterson **Truss Label:** V3	Cust: R 215 JRef:1X012150003 T49 DrwNo: 308.20.0834.08567 / YK 11/03/2020

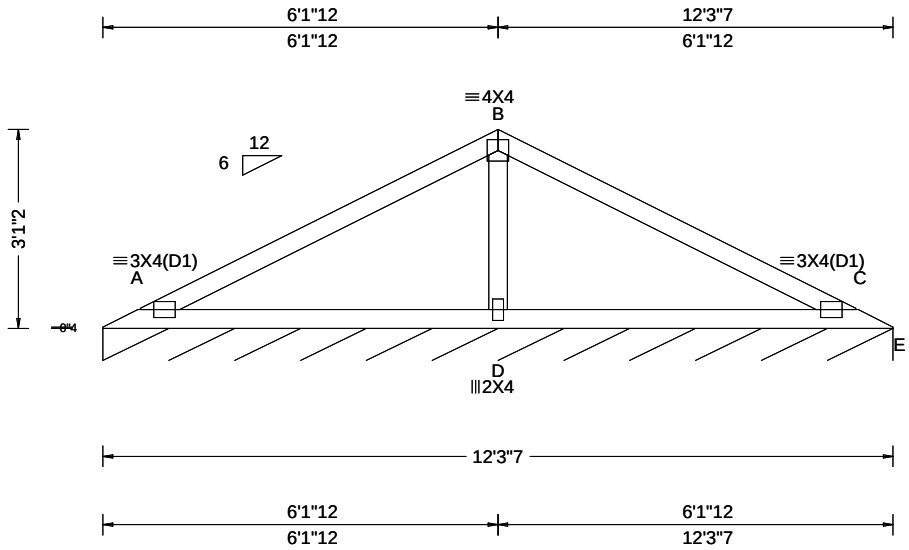

Loading Criteria (psf)

TCLL:	20.00
TCDL:	10.00
BCLL:	0.00
BCDL:	10.00
Des Ld:	40.00
NCBCLL:	10.00
Soffit:	2.00

Load Duration: 1.25
Spacing: 24.0 "

Wind Criteria
Wind Std: ASCE 7-10
Speed: 130 mph
Enclosure: Closed
Risk Category: II
EXP: C Kzt: NA
Mean Height: 15.24 ft
TCDL: 5.0 psf
BCDL: 5.0 psf
MWFRS Parallel Dist: h to 2h
C&C Dist a: 3.00 ft
Loc. from endwall: not in 9.00 ft
GCpi: 0.18
Wind Duration: 1.60

Snow Criteria (Pg,Pf in PSF)
Pg: NA Ct: NA CAT: NA
Pf: NA Ce: NA
Lu: NA Cs: NA
Snow Duration: NA

Building Code:
FBC 2017 RES
TPI Std: 2014
Rep Fac: Yes
FT/RT:20(0)/10(0)
Plate Type(s):
WAVE

Defl/CSI Criteria

PP Deflection in	loc	L/defl	L/#
VERT(LL): 0.027	D	999	240
VERT(CL): 0.056	D	999	180
HORZ(LL): -0.011	D	-	-
HORZ(TL): 0.022	D	-	-

Creep Factor: 2.0
Max TC CSI: 0.533
Max BC CSI: 0.414
Max Web CSI: 0.160

VIEW Ver: 20.01.01A.0724.11

▲ Maximum Reactions (lbs), or *=PLF

	Gravity			Non-Gravity		
Loc	R+	/ R-	/ Rh	/ Rw	/ U	/ RL
E*	82	/-	/-	/42	/1	/6

Wind reactions based on MWFRS
E Brg Width = 147 Min Req = -
Bearing A is a rigid surface.
Members not listed have forces less than 375#

Maximum Top Chord Forces Per Ply (lbs)

Chords	Tens.	Comp.	Chords	Tens.	Comp.
A - B	533	- 207	B - C	533	- 206

Maximum Bot Chord Forces Per Ply (lbs)

Chords	Tens.	Comp.	Chords	Tens.	Comp.
A - D	232	- 417	D - C	232	- 417

Maximum Web Forces Per Ply (lbs)

Webs	Tens.	Comp.
B - D	305	- 715

Lumber

Top chord: 2x4 SP #2;
Bot chord: 2x4 SP #2;
Webs: 2x4 SP #3;

Wind

Wind loads based on MWFRS with additional C&C member design.

Additional Notes

See DWG VAL160101014 for valley details.

The overall height of this truss excluding overhang is 3-1-2.

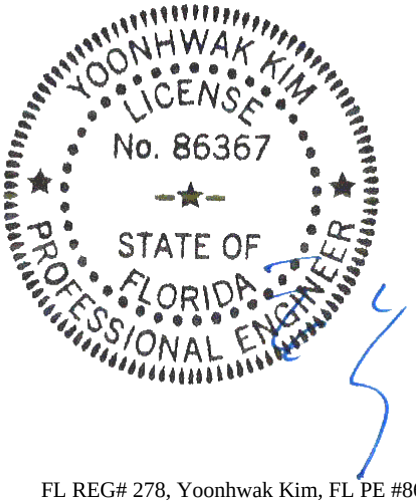

FL REG# 278, Yoonhwak Kim, FL PE #86367
11/03/2020

****WARNING**** READ AND FOLLOW ALL NOTES ON THIS DRAWING!
****IMPORTANT**** FURNISH THIS DRAWING TO ALL CONTRACTORS INCLUDING THE INSTALLERS

Trusses require extreme care in fabricating, handling, shipping, installing and bracing. Refer to and follow the latest edition of BCSI (Building Component Safety Information, by TPI and SBCA) for safety practices prior to performing these functions. Installers shall provide temporary bracing per BCSI. Unless noted otherwise, top chord shall have properly attached structural sheathing and bottom chord shall have a properly attached rigid ceiling. Locations shown for permanent lateral restraint of webs shall have bracing installed per BCSI sections B3, B7, or B10, as applicable. Apply plates to each face of truss and position as shown above and on the Joint Details, unless noted otherwise. Refer to drawings 160A-Z for standard plate positions. Refer to job's General Notes page for additional information.

Alpine, a division of ITW Building Components Group Inc. shall not be responsible for any deviation from this drawing, any failure to build the truss in conformance with ANSI/TPI 1, or for handling, shipping, installation and bracing of trusses. A seal on this drawing or cover page listing this drawing, indicates acceptance of professional engineering responsibility solely for the design shown. The suitability and use of this drawing for any structure is the responsibility of the Building Designer per ANSI/TPI 1 Sec.2.

For more information see these web sites: Alpine: alpineitw.com; TPI: tpinst.org; SBCA: sbcindustry.com; ICC: iccsafe.org; AWC: awc.org

ALPINE AN ITW COMPANY
6750 Forum Drive
Suite 305
Orlando FL, 32821

SEQN: 384596 VAL FROM: CDM	Ply: 1 Qty: 1	**Job Number:** 20-4738 Patterson **Truss Label:** V4	Cust: R 215 JRef:1X012150003 T50 DrwNo: 308.20.0834.09373 / YK 11/03/2020

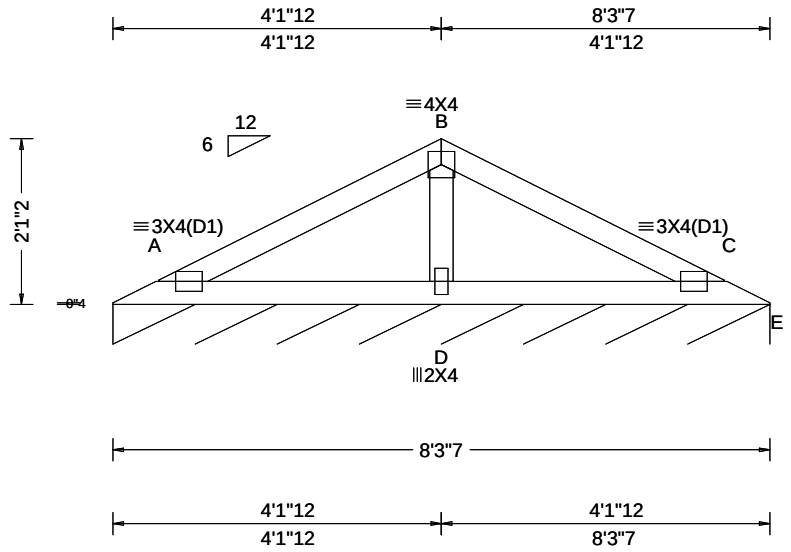

Loading Criteria (psf)	**Wind Criteria**	**Snow Criteria** (Pg,Pf in PSF)	**Defl/CSI Criteria**	**▲Maximum Reactions (lbs), or *=PLF**
TCLL: 20.00 TCDL: 10.00 BCLL: 0.00 BCDL: 10.00 Des Ld: 40.00 NCBCLL: 10.00 Soffit: 2.00 Load Duration: 1.25 Spacing: 24.0 "	Wind Std: ASCE 7-10 Speed: 130 mph Enclosure: Closed Risk Category: II EXP: C Kzt: NA Mean Height: 15.74 ft TCDL: 5.0 psf BCDL: 5.0 psf MWFRS Parallel Dist: h to 2h C&C Dist a: 3.00 ft Loc. from endwall: not in 9.00 ft GCpi: 0.18 Wind Duration: 1.60	Pg: NA Ct: NA CAT: NA Pf: NA Ce: NA Lu: NA Cs: NA Snow Duration: NA Building Code: FBC 2017 RES TPI Std: 2014 Rep Fac: Yes FT/RT:20(0)/10(0) Plate Type(s): WAVE	PP Deflection in loc L/defl L/# VERT(LL): 0.008 D 999 240 VERT(CL): 0.016 D 999 180 HORZ(LL): -0.003 D - - HORZ(TL): 0.007 D - - Creep Factor: 2.0 Max TC CSI: 0.223 Max BC CSI: 0.182 Max Web CSI: 0.071 VIEW Ver: 20.01.01A.0724.11	Gravity / Non-Gravity Loc R+ / R- / Rh / Rw / U / RL E* 82 /- /- /41 /1 /5 Wind reactions based on MWFRS E Brg Width = 99.5 Min Req = - Bearing A is a rigid surface. Members not listed have forces less than 375#

Lumber

Top chord: 2x4 SP #2;
Bot chord: 2x4 SP #2;
Webs: 2x4 SP #3;

Wind

Wind loads based on MWFRS with additional C&C member design.

Additional Notes

See DWG VAL160101014 for valley details.

The overall height of this truss excluding overhang is 2-1-2.

FL REG# 278, Yoonhwak Kim, FL PE #86367
11/03/2020

****WARNING**** READ AND FOLLOW ALL NOTES ON THIS DRAWING!
****IMPORTANT**** FURNISH THIS DRAWING TO ALL CONTRACTORS INCLUDING THE INSTALLERS

Trusses require extreme care in fabricating, handling, shipping, installing and bracing. Refer to and follow the latest edition of BCSI (Building Component Safety Information, by TPI and SBCA) for safety practices prior to performing these functions. Installers shall provide temporary bracing per BCSI. Unless noted otherwise, top chord shall have properly attached structural sheathing and bottom chord shall have a properly attached rigid ceiling. Locations shown for permanent lateral restraint of webs shall have bracing installed per BCSI sections B3, B7, or B10, as applicable. Apply plates to each face of truss and position as shown above and on the Joint Details, unless noted otherwise. Refer to drawings 160A-Z for standard plate positions. Refer to job's General Notes page for additional information.

Alpine, a division of ITW Building Components Group Inc. shall not be responsible for any deviation from this drawing, any failure to build the truss in conformance with ANSI/TPI 1, or for handling, shipping, installation and bracing of trusses. A seal on this drawing or cover page listing this drawing, indicates acceptance of professional engineering responsibility solely for the design shown. The suitability and use of this drawing for any structure is the responsibility of the Building Designer per ANSI/TPI 1 Sec.2.

For more information see these web sites: Alpine: alpineitw.com; TPI: tpinst.org; SBCA: sbcindustry.com; ICC: iccsafe.org; AWC: awc.org

ALPINE AN ITW COMPANY
6750 Forum Drive
Suite 305
Orlando FL, 32821

SEQN: 384597 VAL FROM: CDM	Ply: 1 Qty: 1	**Job Number:** 20-4738 Patterson **Truss Label:** V5	Cust: R 215 JRef:1X012150003 T51 DrwNo: 308.20.0834.11083 / YK 11/03/2020

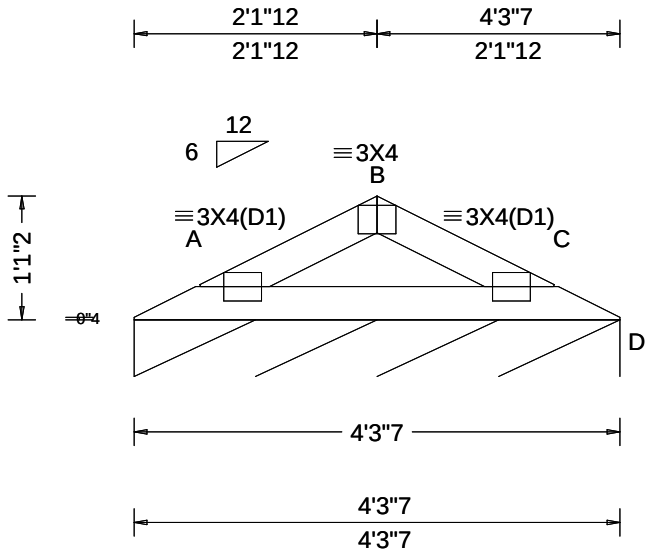

Loading Criteria (psf)

TCLL:	20.00
TCDL:	10.00
BCLL:	0.00
BCDL:	10.00
Des Ld:	40.00
NCBCLL:	10.00
Soffit:	2.00

Load Duration: 1.25
Spacing: 24.0 "

Wind Criteria
Wind Std: ASCE 7-10
Speed: 130 mph
Enclosure: Closed
Risk Category: II
EXP: C Kzt: NA
Mean Height: 16.24 ft
TCDL: 5.0 psf
BCDL: 5.0 psf
MWFRS Parallel Dist: h to 2h
C&C Dist a: 3.00 ft
Loc. from endwall: not in 9.00 ft
GCpi: 0.18
Wind Duration: 1.60

Snow Criteria (Pg,Pf in PSF)
Pg: NA Ct: NA CAT: NA
Pf: NA Ce: NA
Lu: NA Cs: NA
Snow Duration: NA

Building Code:
FBC 2017 RES
TPI Std: 2014
Rep Fac: Yes
FT/RT:20(0)/10(0)
Plate Type(s):
WAVE

Defl/CSI Criteria

PP Deflection in	loc	L/defl	L/#
VERT(LL):	0.005	999	240
VERT(CL):	0.010	999	180
HORZ(LL):	-0.002	-	-
HORZ(TL):	0.003	-	-

Creep Factor: 2.0
Max TC CSI: 0.089
Max BC CSI: 0.122
Max Web CSI: 0.000

VIEW Ver: 20.01.01A.0724.11

▲Maximum Reactions (lbs), or *=PLF

	Gravity			Non-Gravity		
Loc	R+	/ R-	/ Rh	/ Rw	/ U	/ RL
D*	82	/-	/-	/39	/-	/4

Wind reactions based on MWFRS
D Brg Width = 51.5 Min Req = -
Bearing A is a rigid surface.
Members not listed have forces less than 375#

Lumber

Top chord: 2x4 SP #2;
Bot chord: 2x4 SP #2;

Wind

Wind loads based on MWFRS with additional C&C member design.

Additional Notes

See DWG VAL160101014 for valley details.

The overall height of this truss excluding overhang is 1-1-2.

FL REG# 278, Yoonhwak Kim, FL PE #86367
11/03/2020

****WARNING**** READ AND FOLLOW ALL NOTES ON THIS DRAWING!
****IMPORTANT**** FURNISH THIS DRAWING TO ALL CONTRACTORS INCLUDING THE INSTALLERS

Trusses require extreme care in fabricating, handling, shipping, installing and bracing. Refer to and follow the latest edition of BCSI (Building Component Safety Information, by TPI and SBCA) for safety practices prior to performing these functions. Installers shall provide temporary bracing per BCSI. Unless noted otherwise, top chord shall have properly attached structural sheathing and bottom chord shall have a properly attached rigid ceiling. Locations shown for permanent lateral restraint of webs shall have bracing installed per BCSI sections B3, B7, or B10, as applicable. Apply plates to each face of truss and position as shown above and on the Joint Details, unless noted otherwise. Refer to drawings 160A-Z for standard plate positions. Refer to job's General Notes page for additional information.

Alpine, a division of ITW Building Components Group Inc. shall not be responsible for any deviation from this drawing, any failure to build the truss in conformance with ANSI/TPI 1, or for handling, shipping, installation and bracing of trusses. A seal on this drawing or cover page listing this drawing, indicates acceptance of professional engineering responsibility solely for the design shown. The suitability and use of this drawing for any structure is the responsibility of the Building Designer per ANSI/TPI 1 Sec.2.

For more information see these web sites: Alpine: alpineitw.com; TPI: tpinst.org; SBCA: sbcindustry.com; ICC: iccsafe.org; AWC: awc.org

ALPINE AN ITW COMPANY
6750 Forum Drive
Suite 305
Orlando FL, 32821

CLR Reinforcing Member Substitution

This detail is to be used when a Continuous Lateral Restraint (CLR) is specified on a truss design but an alternative web reinforcement method is desired.

Notes:

This detail is only applicable for changing the specified CLR shown on single ply sealed designs to T-reinforcement or L-reinforecement or scab reinforcement.

Alternative reinforcement specified in chart below may be conservative. For minimum alternative reinforcement, re-run design with appropriate reinforcement type.

Use scabs instead of L- or T- reinforcement on webs with intersecting truss joints, such as K-web joints, that may interfere with proper application along the narrow face of the web.

Web Member Size	Specified CLR Restraint	Alternative Reinforecement T- or L- Reinf.	Alternative Reinforecement Scab Reinf.
2x3 or 2x4	1 row	2x4	1-2x4
2x3 or 2x4	2 rows	2x6	2-2x4
2x6	1 row	2x4	1-2x6
2x6	2 rows	2x6	2-2x4(✱)
2x8	1 row	2x6	1-2x8
2x8	2 rows	2x6	2-2x6(✱)

T-reinforcement, L-reinforcement, or scab reinforcement to be same species and grade or better than web member unless specified otherwise on Engineer's sealed design.

(✱) Center scab on wide face of web. Apply (1) scab to each face of web.

T-Reinforcement or L-Reinforcement:

Apply to either side of web narrow face. Attach with 10d (0.128"x3.0",min) nails at 6" o.c. Reinforcing member is a minimum 80% of web member length.

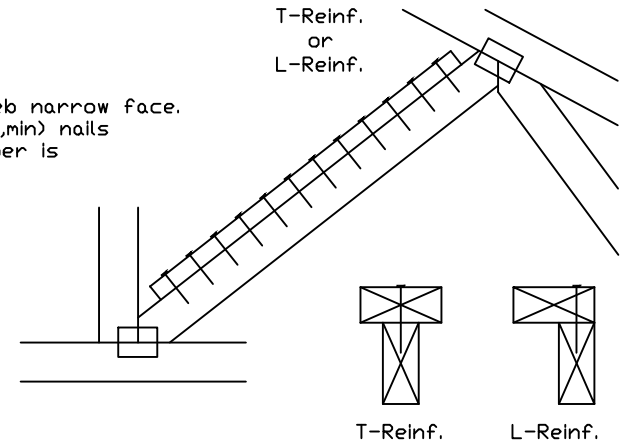

Scab Reinforcement:

Apply scab(s) to wide face of web. No more than (1) scab per face. Attach with 10d (0.128"x3.0",min) nails at 6" o.c. Reinforcing member is a minimum 80% of web member length.

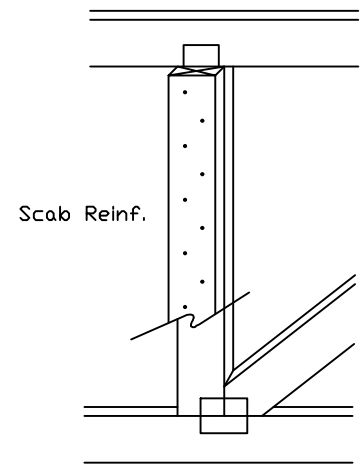

YOONHWAK KIM
LICENSE
No. 86367
STATE OF FLORIDA
PROFESSIONAL ENGINEER

ALPINE
AN ITW COMPANY
514 Earth City Expressway
Suite 242
Earth City, MO 63045

****WARNING** READ AND FOLLOW ALL NOTES ON THIS DRAWING!**
****IMPORTANT** FURNISH THIS DRAWING TO ALL CONTRACTORS INCLUDING THE INSTALLERS.**

Trusses require extreme care in fabricating, handling, shipping, installing and bracing. Refer to and follow the latest edition of BCSI (Building Component Safety Information, by TPI and SBCA) for safety practices prior to performing these functions. Installers shall provide temporary bracing per BCSI. Unless noted otherwise, top chord shall have properly attached structural sheathing and bottom chord shall have a properly attached rigid ceiling. Locations shown for permanent lateral restraint of webs shall have bracing installed per BCSI sections B3, B7 or B10, as applicable. Apply plates to each face of truss and position as shown above and on the Joint Details, unless noted otherwise. Refer to drawings 160A-Z for standard plate positions.

Alpine, a division of ITW Building Components Group Inc. shall not be responsible for any deviation from this drawing, any failure to build the truss in conformance with ANSI/TPI 1, or for handling, shipping, installation & bracing of trusses.

A seal on this drawing or cover page listing this drawing, indicates acceptance of professional engineering responsibility solely for the design shown. The suitability and use of this drawing for any structure is the responsibility of the Building Designer per ANSI/TPI 1 Sec.2.

For more information see this job's general notes page and these web sites:
ALPINE: www.alpineitw.com; TPI: www.tpinst.org; SBCA: www.sbcindustry.org; ICC: www.iccsafe.org

TC LL		PSF
TC DL		PSF
BC DL		PSF
BC LL		PSF
TOT. LD.		PSF
DUR. FAC.		
SPACING		

REF	CLR Subst.
DATE	01/02/19
DRWG	BRCLBSUB0119

Piggyback Detail - ASCE 7-10: 160 mph, 30' Mean Height, Enclosed, Exposure C, Kzt=1.00

160 mph Wind, 30.00 ft Mean Hgt, ASCE 7-10, Enclosed Bldg. located anywhere in roof, Exp C, Wind DL= 5.0 psf (min), Kzt=1.0.
Or 140 mph wind, 30.00 ft Mean Hgt, ASCE 7-10, Enclosed Bldg. located anywhere in roof, Exp D, wind DL= 5.0 psf (min), Kzt=1.0.

Note: Top chords of trusses supporting piggyback cap trusses must be adequately braced by sheathing or purlins. The building Engineer of Record shall provide diagonal bracing or any other suitable anchorage to permanently restrain purlins, and lateral bracing for out of plane loads over gable ends.

Maximum truss spacing is 24" o.c. detail is not applicable if cap supports additional loads such as cupola, steeple, chimney or drag strut loads.

** Refer to Engineer's sealed truss design drawing for piggyback and base truss specifications.

Detail A : Purlin Spacing = 24" o.c. or less

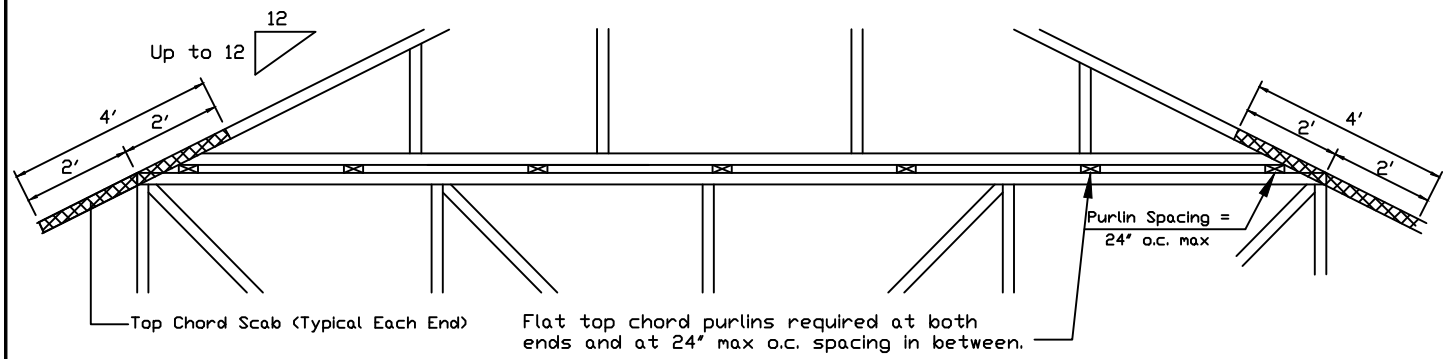

Piggyback cap truss slant nailed to all top chord purlin bracing with (2) 16d box nails (0.135"x3.5") and secure top chord with 2x4 #3 grade scab (1 side only at each end) attached with 2 rows of 10d box nails (0.128"x3") at 4" o.c.

Attach purlin bracing to the flat top chord using (2) 16d box nails (0.135"x3.5").

The top chord #3 grade 2x4 scab may be replaced with either of the following: (1) 3X8 Trulox plate attached with (8) 0.120"x1.375" nails, (4) into cap TC & (4) into base truss TC or (1) 28PB wave piggyback plate plated to the piggyback truss TC and attached to the base truss TC with (4) 0.120"x1.375" nails. Note: Nailing thru holes of wave plate is acceptable.

Detail B : Purlin Spacing > 24" o.c.

Piggyback cap truss slant nailed to all top chord purlin bracing with (2) 16d box nails (0.135"x3.5") and secure top chord with 2x4 #3 grade scab (1 side only at each end) attached with 2 rows of 10d box nails (0.128"x3") at 4" o.c.

Attach purlin bracing to the flat top chord using a minimum of (2) 16d box nails (0.135"x3.5").

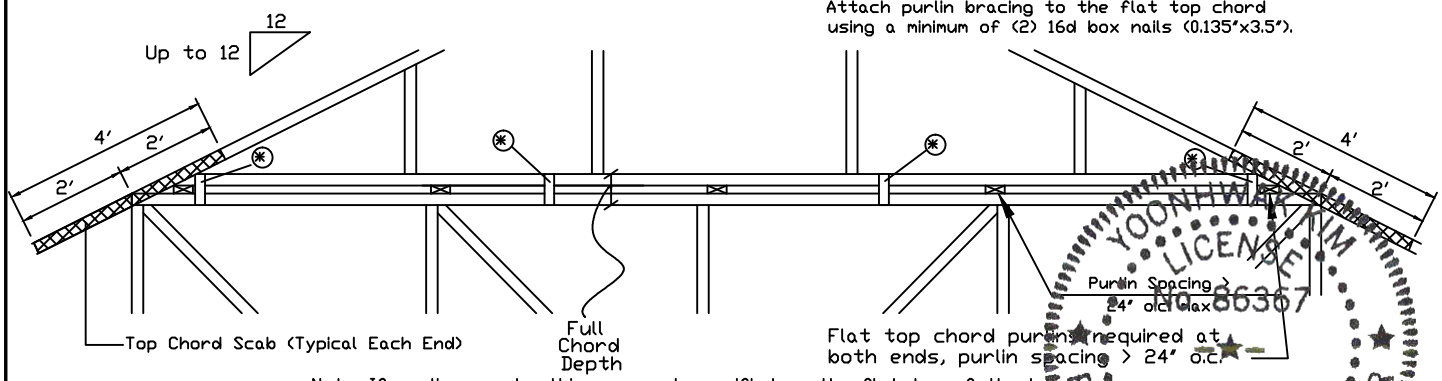

Note: If purlins or sheathing are not specified on the flat top of the base truss, purlins must be installed at 24" o.c. max. and use Detail A.

* In addition, provide connection with one of the following methods:

Trulox
Use 3X8 Trulox plates for 2x4 chord member, and 3X10 Trulox plates for 2x6 and larger chord members. Attach to each face @ 8' o.c. with (4) 0.120"x1.375" nails into cap bottom chord and (4) in base truss top chord. Trulox plates may be staggered 4' o.c. front to back faces.

APA Rated Gusset
8"x8"x7/16" (min) APA rated sheathing gussets (each face). Attach @ 8' o.c. with (8) 6d common (0.113"x2") nails per gusset, (4) in cap bottom chord and (4) in base truss top chord. Gussets may be staggered 4' o.c. front to back faces.

2x4 Vertical Scabs
2x4 SPF #2, full chord depth scabs (each face). Attach @ 8' o.c. with (6) 10d box nails (0.128"x3") per scab, (3) in cap bottom chord and (3) in base truss top chord. Scabs may be staggered 4' o.c. front to back faces.

28PB Wave Piggyback Plate
One 28PB wave piggyback plate to each face @ 8' o.c. Attach teeth to piggyback at time of fabrication. Attach to supporting truss with (4) 0.120"x1.375" nails per face per ply. Piggyback plates may be staggered 4' o.c. front to back faces.

YOONHWAK KIM
LICENSE
No 86367
STATE OF
FLORIDA
PROFESSIONAL ENGINEER

ALPINE
AN ITW COMPANY
514 Earth City Expressway
Suite 242
Earth City, MO 63045

WARNING READ AND FOLLOW ALL NOTES ON THIS DRAWING!
IMPORTANT FURNISH THIS DRAWING TO ALL CONTRACTORS INCLUDING THE INSTALLERS.

Trusses require extreme care in fabricating, handling, shipping, installing and bracing. Refer to and follow the latest edition of BCSI (Building Component Safety Information, by TPI and SBCA) for safety practices prior to performing these functions. Installers shall provide temporary bracing per BCSI. Unless noted otherwise, top chord shall have properly attached structural sheathing and bottom chord shall have a properly attached rigid ceiling. Locations shown for permanent lateral restraint of webs shall have bracing installed per BCSI sections B3, B7 or B10, as applicable. Apply plates to each face of truss and position as shown above and on the Joint Details, unless noted otherwise. Refer to drawings 160A-Z for standard plate positions.

Alpine, a division of ITW Building Components Group Inc. shall not be responsible for any deviation from this drawing, any failure to build the truss in conformance with ANSI/TPI 1, or for handling, shipping, installation & bracing of trusses.

A seal on this drawing or cover page listing this drawing, indicates acceptance of professional engineering responsibility solely for the design shown. The suitability and use of this drawing for any structure is the responsibility of the Building Designer per ANSI/TPI 1 Sec.2.

For more information see this job's general notes page and these web sites:
ALPINE: www.alpineitw.com; TPI: www.tpinst.org; SBCA: www.sbcindustry.org; ICC: www.iccsafe.org

REF	PIGGYBACK
DATE	10/01/14
DRWG	PB160101014
SPACING	24.0"

Gable Stud Reinforcement Detail

ASCE 7-10: 140 mph Wind Speed, 15' Mean Height, Enclosed, Exposure C, Kzt = 1.00

Or: 120 mph Wind Speed, 15' Mean Height, Partially Enclosed, Exposure C, Kzt = 1.00
Or: 120 mph Wind Speed, 15' Mean Height, Enclosed, Exposure D, Kzt = 1.00
Or: 100 mph Wind Speed, 15' Mean Height, Partially Enclosed, Exposure D, Kzt = 1.00

Max Gable Vertical Length	2x4 Gable Vertical Spacing	Species	Brace Grade	No Braces	(1) 1x4 'L' Brace *		(1) 2x4 'L' Brace *		(2) 2x4 'L' Brace **		(1) 2x6 'L' Brace *		(2) 2x6 'L' Brace **	
					Group A	Group B	Group A	Group B	Group A	Group B	Group A	Group B	Group A	Group B
	24" o.c.	SPF HF	#1 / #2	4' 3"	7' 3"	7' 7"	8' 7"	8' 11"	10' 3"	10' 8"	13' 6"	14' 0"	14' 0"	14' 0"
			#3	4' 1"	6' 7"	7' 1"	8' 6"	8' 10"	10' 1"	10' 6"	13' 4"	13' 10"	14' 0"	14' 0"
			Stud	4' 1"	6' 7"	7' 0"	8' 6"	8' 10"	10' 1"	10' 6"	13' 4"	13' 10"	14' 0"	14' 0"
			Standard	4' 1"	5' 8"	6' 0"	7' 7"	8' 1"	10' 1"	10' 6"	11' 10"	12' 8"	14' 0"	14' 0"
		SP DFL	#1	4' 6"	7' 4"	7' 8"	8' 8"	9' 0"	10' 4"	10' 9"	13' 8"	14' 0"	14' 0"	14' 0"
			#2	4' 3"	7' 3"	7' 7"	8' 7"	8' 11"	10' 3"	10' 8"	13' 6"	14' 0"	14' 0"	14' 0"
			#3	4' 2"	6' 0"	6' 4"	7' 11"	8' 6"	10' 2"	10' 7"	12' 5"	13' 4"	14' 0"	14' 0"
			Stud	4' 2"	6' 0"	6' 4"	7' 11"	8' 6"	10' 2"	10' 7"	12' 5"	13' 4"	14' 0"	14' 0"
			Standard	4' 0"	5' 3"	5' 7"	7' 0"	7' 6"	9' 6"	10' 2"	11' 0"	11' 10"	14' 0"	14' 0"
	16" o.c.	SPF HF	#1 / #2	4' 11"	8' 4"	8' 8"	9' 10"	10' 3"	11' 8"	12' 2"	14' 0"	14' 0"	14' 0"	14' 0"
			#3	4' 8"	8' 1"	8' 8"	9' 8"	10' 1"	11' 7"	12' 1"	14' 0"	14' 0"	14' 0"	14' 0"
			Stud	4' 8"	8' 1"	8' 6"	9' 8"	10' 1"	11' 7"	12' 1"	14' 0"	14' 0"	14' 0"	14' 0"
			Standard	4' 8"	6' 11"	7' 5"	9' 3"	9' 11"	11' 7"	12' 1"	14' 0"	14' 0"	14' 0"	14' 0"
		SP DFL	#1	5' 1"	8' 5"	8' 9"	9' 11"	10' 4"	11' 10"	12' 4"	14' 0"	14' 0"	14' 0"	14' 0"
			#2	4' 11"	8' 4"	8' 8"	9' 10"	10' 3"	11' 8"	12' 2"	14' 0"	14' 0"	14' 0"	14' 0"
			#3	4' 9"	7' 4"	7' 9"	9' 9"	10' 2"	11' 8"	12' 1"	14' 0"	14' 0"	14' 0"	14' 0"
			Stud	4' 9"	7' 4"	7' 9"	9' 9"	10' 2"	11' 8"	12' 1"	14' 0"	14' 0"	14' 0"	14' 0"
			Standard	4' 8"	6' 5"	6' 10"	8' 7"	9' 2"	11' 7"	12' 1"	13' 6"	14' 0"	14' 0"	14' 0"
	12" o.c.	SPF HF	#1 / #2	5' 5"	9' 2"	9' 6"	10' 10"	11' 3"	11' 8"	13' 5"	14' 0"	14' 0"	14' 0"	14' 0"
			#3	5' 1"	9' 0"	9' 4"	10' 8"	11' 1"	12' 9"	13' 3"	14' 0"	14' 0"	14' 0"	14' 0"
			Stud	5' 1"	9' 0"	9' 4"	10' 8"	11' 1"	12' 9"	13' 3"	14' 0"	14' 0"	14' 0"	14' 0"
			Standard	5' 1"	8' 0"	8' 6"	10' 8"	11' 1"	12' 9"	13' 3"	14' 0"	14' 0"	14' 0"	14' 0"
		SP DFL	#1	5' 8"	9' 3"	9' 8"	10' 11"	11' 4"	13' 0"	13' 6"	14' 0"	14' 0"	14' 0"	14' 0"
			#2	5' 5"	9' 2"	9' 6"	10' 10"	11' 3"	12' 11"	13' 5"	14' 0"	14' 0"	14' 0"	14' 0"
			#3	5' 3"	8' 5"	9' 0"	10' 9"	11' 2"	12' 10"	13' 4"	14' 0"	14' 0"	14' 0"	14' 0"
			Stud	5' 3"	8' 5"	9' 0"	10' 9"	11' 2"	12' 10"	13' 4"	14' 0"	14' 0"	14' 0"	14' 0"
			Standard	5' 1"	7' 5"	7' 11"	9' 11"	10' 7"	12' 9"	13' 3"	14' 0"	14' 0"	14' 0"	14' 0"

Bracing Group Species and Grades:

Group A:

Spruce-Pine-Fir

#1 / #2	Standard
#3	Stud

Hem-Fir

#2	Stud
#3	Standard

Douglas Fir-Larch

#3
Stud
Standard

Southern Pine***

#3
Stud
Standard

Group B:

Hem-Fir

#1 & Btr
#1

Douglas Fir-Larch

#1
#2

Southern Pine***

#1
#2

1x4 Braces shall be SRB (Stress-Rated Board).

***For 1x4 So. Pine use only Industrial 55 or Industrial 45 Stress-Rated Boards. Group B values may be used with these grades.

Gable Truss Detail Notes:

Wind Load deflection criterion is L/240.

Provide uplift connections for 55 plf over continuous bearing (5 psf TC Dead Load).

Gable end supports load from 4' 0" outlookers with 2' 0" overhang, or 12" plywood overhang.

Attach 'L' braces with 10d (0.128"x3.0" min) nails.

* For (1) 'L' brace: space nails at 2" o.c. in 18" end zones and 4" o.c. between zones.

** For (2) 'L' braces: space nails at 3" o.c. in 18" end zones and 6" o.c. between zones.

'L' bracing must be a minimum of 80% of web member length.

Gable Vertical Plate Sizes

Vertical Length	No Splice
Less than 4' 0"	1X4 or 2X3
Greater than 4' 0"	3X4

+ Refer to common truss design for peak, splice, and heel plates.

Refer to the Building Designer for conditions not addressed by this detail.

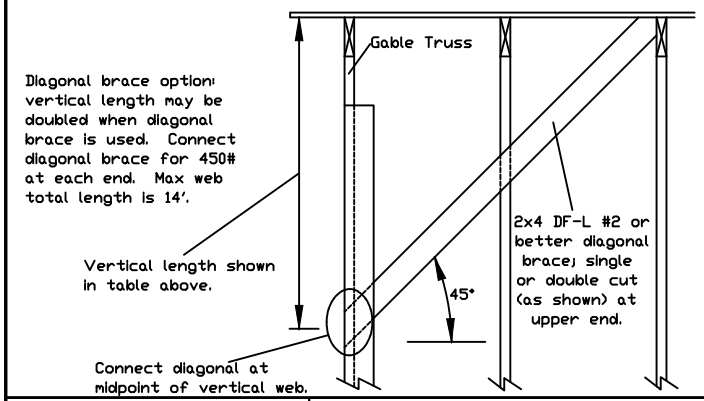

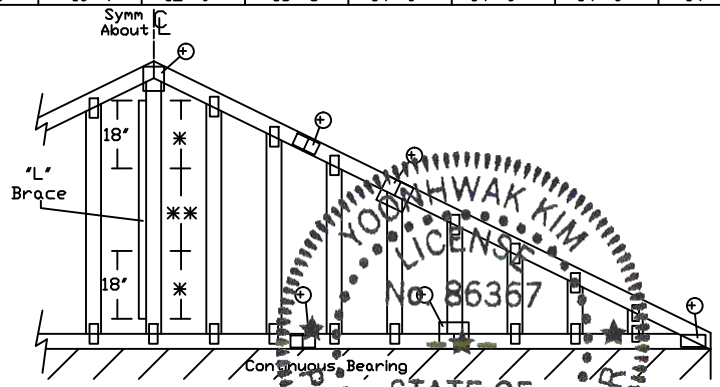

Refer to chart above for max gable vertical length.

YOONHWAK KIM LICENSE No. 86367 STATE OF FLORIDA PROFESSIONAL ENGINEER

WARNING READ AND FOLLOW ALL NOTES ON THIS DRAWING!
IMPORTANT FURNISH THIS DRAWING TO ALL CONTRACTORS INCLUDING THE INSTALLERS.

Trusses require extreme care in fabricating, handling, shipping, installing and bracing. Refer to and follow the latest edition of BCSI (Building Component Safety Information, by TPI and SBCA) for safety practices prior to performing these functions. Installers shall provide temporary bracing per BCSI. Unless noted otherwise, top chord shall have properly attached structural sheathing and bottom chord shall have a properly attached rigid ceiling. Locations shown for permanent lateral restraint of webs shall have bracing installed per BCSI sections B3, B7 or B10, as applicable. Apply plates to each face of truss and position as shown above and on the Joint Details, unless noted otherwise. Refer to drawings 160A-Z for standard plate positions.

Alpine, a division of ITW Building Components Group Inc. shall not be responsible for any deviation from this drawing, any failure to build the truss in conformance with ANSI/TPI 1, or for handling, shipping, installation & bracing of trusses.

A seal on this drawing or cover page listing this drawing, indicates acceptance of professional engineering responsibility solely for the design shown. The suitability and use of this drawing for any structure is the responsibility of the Building Designer per ANSI/TPI 1 Sec.2.

For more information see this job's general notes page and these web sites:
ALPINE: www.alpineitw.com; TPI: www.tpinst.org; SBCA: www.sbcindustry.org; ICC: www.iccsafe.org

ALPINE AN ITW COMPANY
514 Earth City Expressway
Suite 242
Earth City, MO 63045

REF	ASCE7-10-GAB14015
DATE	10/01/14
DRWG	A14015ENC101014

MAX. TOT. LD. 60 PSF

MAX. SPACING 24.0"

Gable Detail

For Let-in Verticals

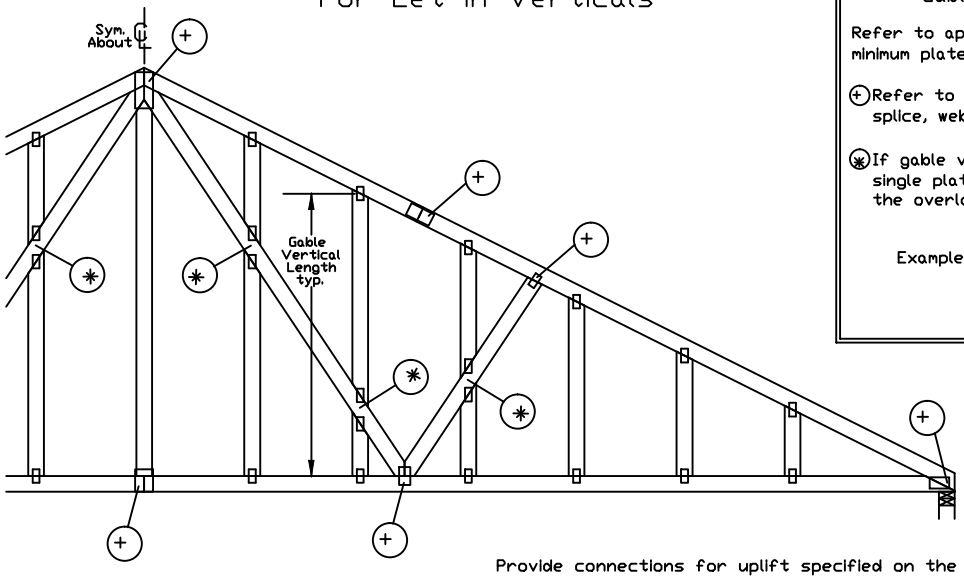

Gable Truss Plate Sizes

Refer to appropriate Alpine gable detail for minimum plate sizes for vertical studs.

(+) Refer to Engineered truss design for peak, splice, web, and heel plates.

(✱) If gable vertical plates overlap, use a single plate that covers the total area of the overlapped plates to span the web.

Example:

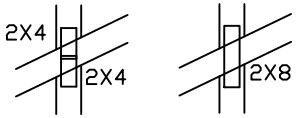

"T" Reinforcement Attachment Detail

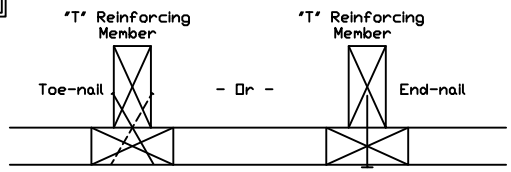

Provide connections for uplift specified on the engineered truss design.

Attach each "T" reinforcing member with

End Driven Nails:
10d Common (0.148"x 3.",min) Nails at 4" o.c. plus
(4) nails in the top and bottom chords.

Toenailed Nails:
10d Common (0.148"x3",min) Toenails at 4" o.c. plus
(4) toenails in the top and bottom chords.

This detail to be used with the appropriate Alpine gable detail for ASCE wind load.

ASCE 7-05 Gable Detail Drawings
A13015051014, A12015051014, A11015051014, A10015051014, A14015051014,
A13030051014, A12030051014, A11030051014, A10030051014, A14030051014

ASCE 7-10 & ASCE 7-16 Gable Detail Drawings
A11515ENC100118, A12015ENC100118, A14015ENC100118, A16015ENC100118,
A18015ENC100118, A20015ENC100118, A20015END100118, A20015PED100118,
A11530ENC100118, A12030ENC100118, A14030ENC100118, A16030ENC100118,
A18030ENC100118, A20030ENC100118, A20030END100118, A20030PED100118,
S11515ENC100118, S12015ENC100118, S14015ENC100118, S16015ENC100118,
S18015ENC100118, S20015ENC100118, S20015END100118, S20015PED100118,
S11530ENC100118, S12030ENC100118, S14030ENC100118, S16030ENC100118,
S18030ENC100118, S20030ENC100118, S20030END100118, S20030PED100118

See appropriate Alpine gable detail for maximum unreinforced gable vertical length.

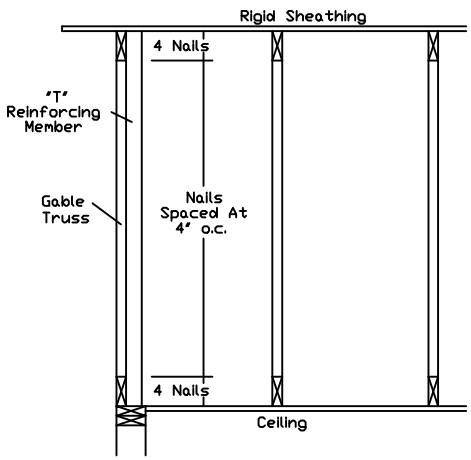

To convert from "L" to "T" reinforcing members, multiply "T" increase by length (based on appropriate Alpine gable detail).

Maximum allowable "T" reinforced gable vertical length is 14' from top to bottom chord.

"T" reinforcing member material must match size, specie, and grade of the "L" reinforcing member.

Web Length Increase w/ "T" Brace

"T" Reinf. Mbr. Size	"T" Increase
2x4	30 %
2x6	20 %

Example:
ASCE 7-10 Wind Speed = 120 mph
Mean Roof Height = 30 ft, Kzt = 1.00
Gable Vertical = 24"o.c. SP #3
"T" Reinforcing Member Size = 2x4
"T" Brace Increase (From Above) = 30% = 1.30
(1) 2x4 "L" Brace Length = 8' 7"
Maximum "T" Reinforced Gable Vertical Length
1.30 x 8' 7" = 11' 2"

YOONHWAK KIM
LICENSE NUMBER 86367
STATE OF FLORIDA
PROFESSIONAL ENGINEER

ALPINE
AN ITW COMPANY
514 Earth City Expressway
Suite 242
Earth City, MO 63045

****WARNING** READ AND FOLLOW ALL NOTES ON THIS DRAWING!**
****IMPORTANT** FURNISH THIS DRAWING TO ALL CONTRACTORS INCLUDING THE INSTALLERS.**

Trusses require extreme care in fabricating, handling, shipping, installing and bracing. Refer to and follow the latest edition of BCSI (Building Component Safety Information, by TPI and SBCA) for safety practices prior to performing these functions. Installers shall provide temporary bracing per BCSI. Unless noted otherwise, top chord shall have properly attached structural sheathing and bottom chord shall have a properly attached rigid ceiling. Locations shown for permanent lateral restraint of webs shall have bracing installed per BCSI sections B3, B7 or B10, as applicable. Apply plates to each face of truss and position as shown above and on the Joint Details, unless noted otherwise. Refer to drawings 160A-Z for standard plate positions.

Alpine, a division of ITW Building Components Group Inc. shall not be responsible for any deviation from this drawing, any failure to build the truss in conformance with ANSI/TPI 1, or for handling, shipping, installation & bracing of trusses.

A seal on this drawing or cover page listing this drawing, indicates acceptance of professional engineering responsibility solely for the design shown. The suitability and use of this drawing for any structure is the responsibility of the Building Designer per ANSI/TPI 1 Sec.2.

For more information see this job's general notes page and these web sites:
ALPINE: www.alpineitw.com; TPI: www.tpinst.org; SBCA: www.sbcindustry.org; ICC: www.iccsafe.org

MAX. TOT. LD.	60 PSF
DUR. FAC.	ANY
MAX. SPACING	24.0"

REF	LET-IN VERT
DATE	01/02/2018
DRWG	GBLLETIN0118

Gable Stud Reinforcement Detail

ASCE 7-10: 140 mph Wind Speed, 30' Mean Height, Enclosed, Exposure C, Kzt = 1.00

Or: 120 mph Wind Speed, 30' Mean Height, Partially Enclosed, Exposure C, Kzt = 1.00
Or: 120 mph Wind Speed, 30' Mean Height, Enclosed, Exposure D, Kzt = 1.00
Or: 100 mph wind speed, 30' Mean Height, Partially Enclosed, Exposure D, Kzt = 1.00

Max Gable Vertical Length

2x4 Gable Vertical Spacing	Species	Brace Grade	No Braces	(1) 1x4 'L' Brace * Group A	(1) 1x4 'L' Brace * Group B	(1) 2x4 'L' Brace * Group A	(1) 2x4 'L' Brace * Group B	(2) 2x4 'L' Brace ** Group A	(2) 2x4 'L' Brace ** Group B	(1) 2x6 'L' Brace * Group A	(1) 2x6 'L' Brace * Group B	(2) 2x6 'L' Brace ** Group A	(2) 2x6 'L' Brace ** Group B
24" o.c.	SPF HF	#1 / #2	4' 1"	6' 11"	7' 2"	8' 2"	8' 6"	9' 9"	10' 2"	12' 10"	13' 4"	14' 0"	14' 0"
		#3	3' 10"	6' 2"	6' 7"	8' 1"	8' 5"	9' 8"	10' 0"	12' 8"	13' 2"	14' 0"	14' 0"
		Stud	3' 10"	6' 2"	6' 6"	8' 1"	8' 5"	9' 8"	10' 0"	12' 8"	13' 2"	14' 0"	14' 0"
		Standard	3' 10"	5' 3"	5' 7"	7' 0"	7' 6"	9' 6"	10' 0"	11' 0"	11' 10"	14' 0"	14' 0"
	SP DFL	#1	4' 2"	7' 0"	7' 3"	8' 3"	8' 7"	9' 10"	10' 3"	13' 0"	13' 6"	14' 0"	14' 0"
		#2	4' 1"	6' 11"	7' 2"	8' 2"	8' 6"	9' 9"	10' 2"	12' 10"	13' 4"	14' 0"	14' 0"
		#3	4' 0"	5' 7"	5' 11"	7' 5"	7' 11"	9' 8"	10' 1"	11' 7"	12' 5"	14' 0"	14' 0"
		Stud	4' 0"	5' 7"	5' 11"	7' 5"	7' 11"	9' 8"	10' 1"	11' 7"	12' 5"	14' 0"	14' 0"
		Standard	3' 9"	4' 11"	5' 13"	6' 6"	7' 0"	8' 10"	9' 6"	10' 3"	11' 0"	13' 11"	14' 0"
16" o.c.	SPF HF	#1 / #2	4' 8"	7' 11"	8' 3"	9' 4"	9' 9"	11' 2"	11' 7"	14' 0"	14' 0"	14' 0"	14' 0"
		#3	4' 5"	7' 6"	8' 3"	9' 3"	9' 7"	11' 0"	11' 6"	14' 0"	14' 0"	14' 0"	14' 0"
		Stud	4' 5"	7' 6"	8' 0"	9' 3"	9' 7"	11' 0"	11' 6"	14' 0"	14' 0"	14' 0"	14' 0"
		Standard	4' 5"	6' 5"	6' 10"	8' 7"	9' 2"	11' 0"	11' 6"	13' 6"	14' 0"	14' 0"	14' 0"
	SP DFL	#1	4' 10"	8' 0"	8' 4"	9' 6"	9' 10"	11' 3"	11' 9"	14' 0"	14' 0"	14' 0"	14' 0"
		#2	4' 8"	7' 11"	8' 3"	9' 4"	9' 9"	11' 2"	11' 7"	14' 0"	14' 0"	14' 0"	14' 0"
		#3	4' 7"	6' 10"	7' 3"	9' 1"	9' 8"	11' 1"	11' 6"	14' 0"	14' 0"	14' 0"	14' 0"
		Stud	4' 7"	6' 10"	7' 3"	9' 1"	9' 8"	11' 1"	11' 6"	14' 0"	14' 0"	14' 0"	14' 0"
		Standard	4' 5"	6' 0"	6' 5"	8' 0"	8' 7"	10' 10"	11' 6"	12' 7"	13' 15"	14' 0"	14' 0"
12" o.c.	SPF HF	#1 / #2	5' 2"	8' 9"	9' 1"	10' 4"	10' 9"	11' 2"	12' 9"	14' 0"	14' 0"	14' 0"	14' 0"
		#3	4' 10"	8' 7"	8' 11"	10' 2"	10' 7"	12' 2"	12' 8"	14' 0"	14' 0"	14' 0"	14' 0"
		Stud	4' 10"	8' 7"	8' 11"	10' 2"	10' 7"	12' 2"	12' 8"	14' 0"	14' 0"	14' 0"	14' 0"
		Standard	4' 10"	7' 5"	7' 11"	9' 11"	10' 7"	12' 2"	12' 8"	14' 0"	14' 0"	14' 0"	14' 0"
	SP DFL	#1	5' 4"	8' 10"	9' 2"	10' 5"	10' 10"	12' 5"	12' 11"	14' 0"	14' 0"	14' 0"	14' 0"
		#2	5' 2"	8' 9"	9' 1"	10' 4"	10' 9"	12' 3"	12' 9"	14' 0"	14' 0"	14' 0"	14' 0"
		#3	5' 0"	7' 10"	8' 4"	10' 3"	10' 8"	12' 2"	12' 8"	14' 0"	14' 0"	14' 0"	14' 0"
		Stud	5' 0"	7' 10"	8' 4"	10' 3"	10' 8"	12' 2"	12' 8"	14' 0"	14' 0"	14' 0"	14' 0"
		Standard	4' 10"	6' 11"	7' 4"	9' 3"	9' 10"	12' 2"	12' 8"	14' 0"	14' 0"	14' 0"	14' 0"

Bracing Group Species and Grades:

Group A:

Spruce-Pine-Fir

#1 / #2	Standard
#3	Stud

Hem-Fir

#2	Stud
#3	Standard

Douglas Fir-Larch

#3
Stud
Standard

Southern Pine***

#3
Stud
Standard

Group B:

Hem-Fir

#1 & Btr
#1

Douglas Fir-Larch

#1
#2

Southern Pine***

#1
#2

1x4 Braces shall be SRB (Stress-Rated Board).

***For 1x4 So. Pine use only Industrial 55 or Industrial 45 Stress-Rated Boards. Group B values may be used with these grades.

Gable Truss Detail Notes:

Wind Load deflection criterion is L/240.

Provide uplift connections for 100 plf over continuous bearing (5 psf TC Dead Load).

Gable end supports load from 4' 0" outlookers with 2' 0" overhang, or 12" plywood overhang.

Attach 'L' braces with 10d (0.128"x3.0" min) nails.

* For (1) 'L' brace: space nails at 2" o.c. in 18" end zones and 4" o.c. between zones.

** For (2) 'L' braces: space nails at 3" o.c. in 18" end zones and 6" o.c. between zones.

'L' bracing must be a minimum of 80% of web member length.

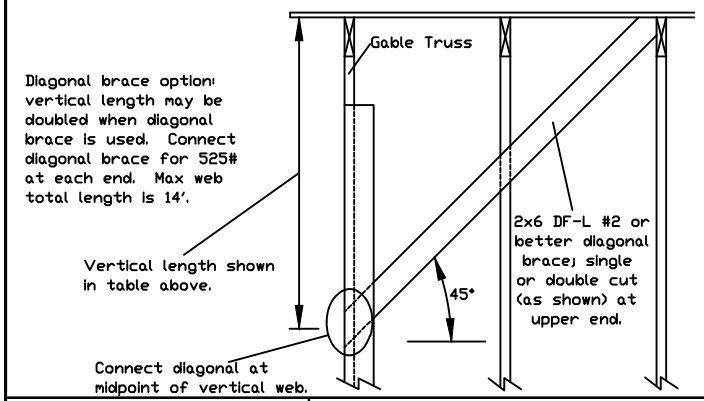

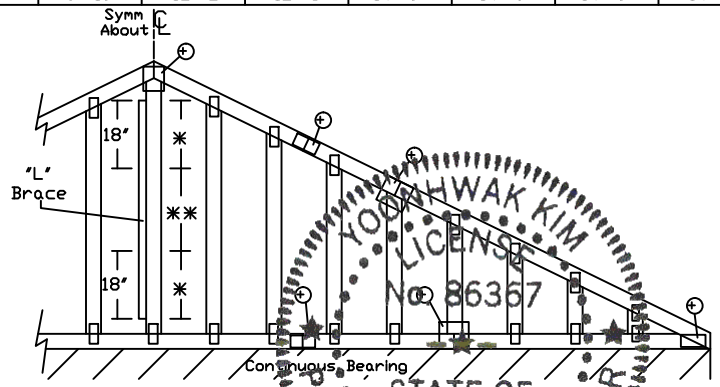

Refer to chart above for max gable vertical length.

Gable Vertical Plate Sizes

Vertical Length	No Splice
Less than 4' 0"	2X4
Greater than 4' 0", but less than 11' 6"	3X4
Greater than 11' 6"	4X4

+ Refer to common truss design for peak, splice, and heel plates.

Refer to the Building Designer for conditions not addressed by this detail.

YOONHWAK KIM LICENSE No 86367 STATE OF FLORIDA PROFESSIONAL ENGINEER

****WARNING** READ AND FOLLOW ALL NOTES ON THIS DRAWING!**
****IMPORTANT** FURNISH THIS DRAWING TO ALL CONTRACTORS INCLUDING THE INSTALLERS.**

Trusses require extreme care in fabricating, handling, shipping, installing and bracing. Refer to and follow the latest edition of BCSI (Building Component Safety Information, by TPI and SBCA) for safety practices prior to performing these functions. Installers shall provide temporary bracing per BCSI. Unless noted otherwise, top chord shall have properly attached structural sheathing and bottom chord shall have a properly attached rigid ceiling. Locations shown for permanent lateral restraint of webs shall have bracing installed per BCSI sections B3, B7 or B10, as applicable. Apply plates to each face of truss and position as shown above and on the Joint Details, unless noted otherwise. Refer to drawings 160A-Z for standard plate positions.

Alpine, a division of ITW Building Components Group Inc. shall not be responsible for any deviation from this drawing, any failure to build the truss in conformance with ANSI/TPI 1, or for handling, shipping, installation & bracing of trusses.

A seal on this drawing or cover page listing this drawing, indicates acceptance of professional engineering responsibility solely for the design shown. The suitability and use of this drawing for any structure is the responsibility of the Building Designer per ANSI/TPI 1 Sec.2.

For more information see this job's general notes page and these web sites: ALPINE: www.alpineitw.com; TPI: www.tpinst.org; SBCA: www.sbcindustry.org; ICC: www.iccsafe.org

ALPINE AN ITW COMPANY
514 Earth City Expressway
Suite 242
Earth City, MO 63045

REF	ASCE7-10-GAB14030
DATE	10/01/14
DRWG	A14030ENC101014

MAX. TOT. LD. 60 PSF

MAX. SPACING 24.0"

Valley Detail - ASCE 7-10: 160 mph, 30' Mean Height, Enclosed, Exp. C, Kzt=1.00

Top Chord 2x4 SP #2N, SPF #1/#2, DF-L #2 or better.
Bot Chord 2x4 SP #2N or SPF #1/#2 or better.
Webs 2x4 SP #3, SPF #1/#2, DF-L #2 or better.

** Attach each valley to every supporting truss with:
(2) 16d box (0.135" x 3.5") nails toe-nailed for ASCE 7-10 160 mph. 30' Mean Height, Enclosed Building, Exp. C, Wind TC DL=5 psf, Kzt = 1.00
Or
ASCE 7-10 140 mph. 30' Mean Height, Enclosed Building, Exp. D, Wind TC DL=5 psf, Kzt = 1.00

Bottom chord may be square or pitched cut as shown.

Valleys short enough to be cut as solid triangular members from a single 2x6, or larger as required, shall be permitted in lieu of fabricating from separate 2x4 members.

All plates shown are ITW BCG Wave Plates.

Unless specified otherwise on engineer's sealed design, for vertical valley webs taller than 7-9" apply 2x4 "T" reinforcement, 80% length of web, same species and grade or better, attached with 10d box (0.128" x 3.0") nails at 6" o.c. In lieu of "T" reinforcement, 2x4 Continuous Lateral Restraint applied at mid-length of web is permitted with diagonal bracing as shown in DRWG BRCLBANC1014.

Top chord of truss beneath valley set must be braced with:
properly attached, rated sheathing applied prior to valley truss installation.
Or
Purlins at 24" o.c. or as otherwise specified on engineer's sealed design
Or
By valley trusses used in lieu of purlin spacing as specified on Engineer's sealed design.

*** Note that the purlin spacing for bracing the top chord of the truss beneath the valley is measured along the slope of the top chord.

++ Larger spans may be built as long as the vertical height does not exceed 14'-0".

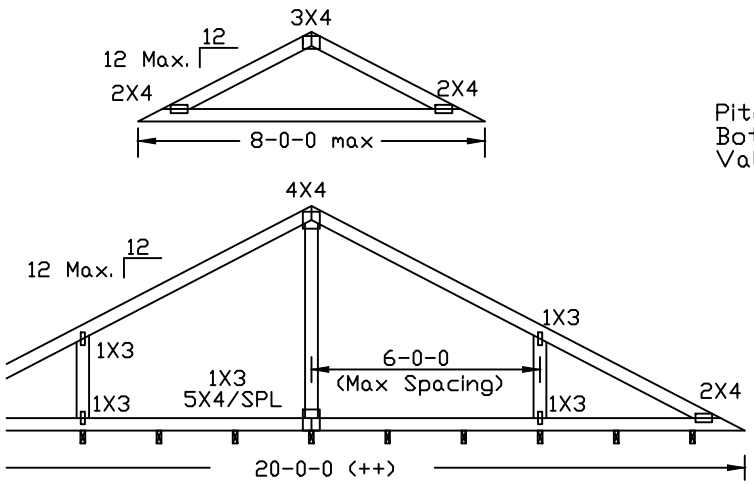

Supporting trusses at 24" o.c. maximum spacing.

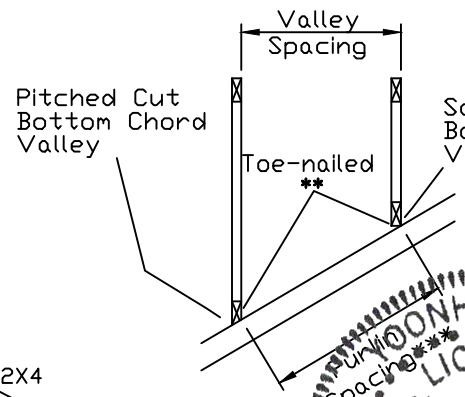

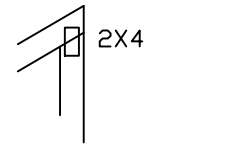

Square Cut Bottom Chord Valley

Stubbed Valley End Detail

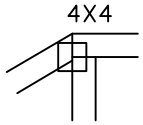

Optional Hip Joint Detail

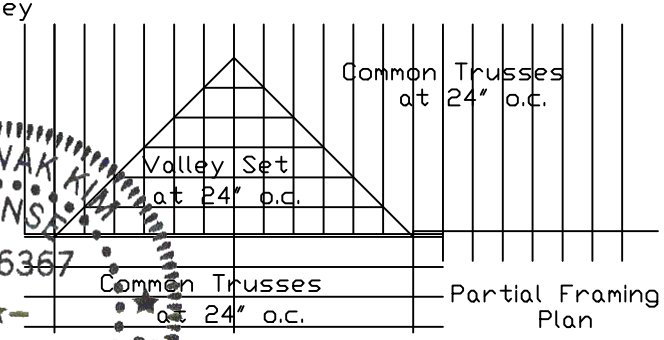

Partial Framing Plan

YOONHWAK KIM
LICENSE
No. 86367
STATE OF
FLORIDA
PROFESSIONAL ENGINEER

ALPINE
AN ITW COMPANY
514 Earth City Expressway
Suite 242
Earth City, MO 63045

WARNING READ AND FOLLOW ALL NOTES ON THIS DRAWING!
IMPORTANT FURNISH THIS DRAWING TO ALL CONTRACTORS INCLUDING THE INSTALLERS.

Trusses require extreme care in fabricating, handling, shipping, installing and bracing. Refer to and follow the latest edition of BCSI (Building Component Safety Information, by TPI and SBCA) for safety practices prior to performing these functions. Installers shall provide temporary bracing per BCSI. Unless noted otherwise, top chord shall have properly attached structural sheathing and bottom chord shall have a properly attached rigid ceiling. Locations shown for permanent lateral restraint of webs shall have bracing installed per BCSI sections B3, B7 or B10, as applicable. Apply plates to each face of truss and position as shown above and on the Joint Details, unless noted otherwise. Refer to drawings 160A-Z for standard plate positions.

Alpine, a division of ITW Building Components Group Inc. shall not be responsible for any deviation from this drawing, any failure to build the truss in conformance with ANSI/TPI 1, or for handling, shipping, installation & bracing of trusses.

A seal on this drawing or cover page listing this drawing, indicates acceptance of professional engineering responsibility solely for the design shown. The suitability and use of this drawing for any structure is the responsibility of the Building Designer per ANSI/TPI 1 Sec.2.

For more information see this job's general notes page and these web sites: ALPINE: www.alpineitw.com; TPI: www.tpinst.org; SBCA: www.sbcindustry.org; ICC: www.iccsafe.org

TC LL	30	30	40PSF	
TC DL	20	15	7PSF	
BC DL	10	10	10 PSF	
BC LL	0	0	0PSF	
TOT. LD.	60	55	57PSF	
DUR.FAC.	1.25/1.33	1.15	1.15	
SPACING		24.0"		

REF	VALLEY DETAIL
DATE	10/01/2014
DRWG	VAL160101014