Scale: 1/4"= 1'-0"

SIGN E01

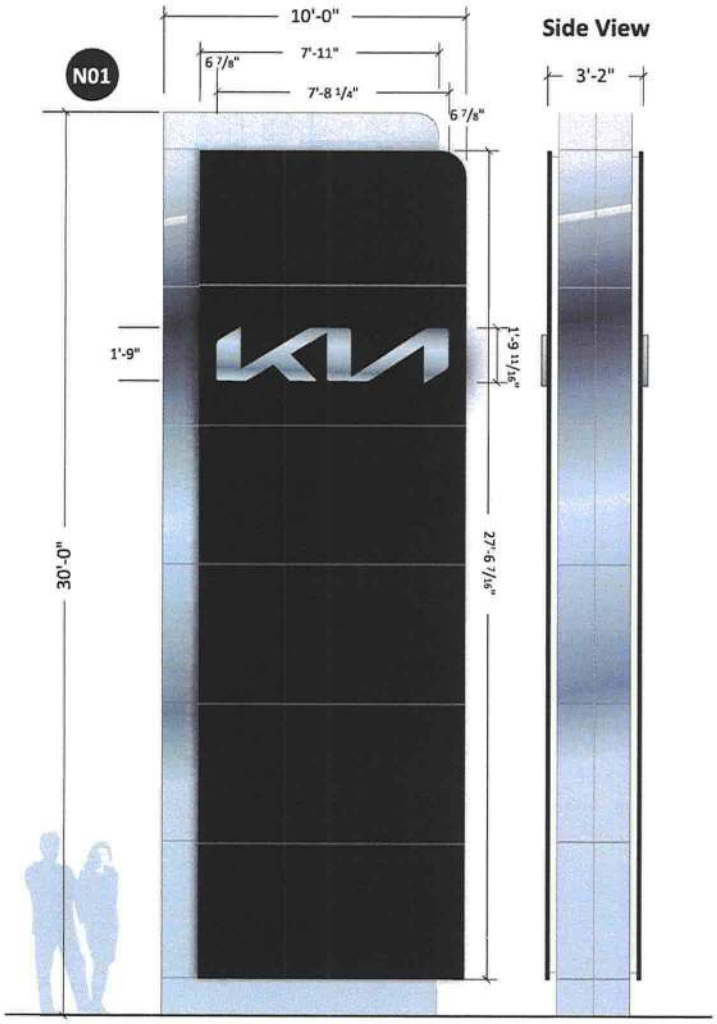

Side View

Columbia County Building Department
Plans Reviewed for Code Compliance
State of Florida

KUSPS30

Specifications

Cladding – 4MM KIA Black and Metallic Silver ACM
Accent Lighting – 7100K LED illumination with 7328 White Polycarbonate Lens
KIA Wordmark – Milled Aluminum and Plastic "Sandwich" Design with 7100K LED illumination thru edge of filler
Black edge always toward street >

Colors

- Black KIA ACM – Midnight Black (Pantone 7547C)
- Metallic Silver KIA ACM – Alfrex Exotic Mica

Accent Lighting Lens – 7328 White
LED – 7100K White Illumination

Logo: 13.89 Sq. Ft.
Total: 300 Sq. Ft.

TO BE REMOVED

Existing KPSN30 Pylon

DESIGNED IN COMPLIANCE 2020 FLORIDA BUILDING CODE, 7th EDITION SECTION 1620 AND APPENDIX H AND ASCE 7-16
V(ULT) WIND SPEED 140 MPH • EXPOSURE CLASSIFICATION = C • RISK CATEGORY = II
DESIGN PRESSURE 26.1 PSF

Dynamic Engineering Solutions, Inc.
John H. Omslaer, PE 52733, EB 28829
351 S. Cypress Road, Suite 303 • Pompano Beach, FL 33060

PROPOSED:

Install one (1) replacement 30'-0" x 10'-0" x 3'-2" deep double face internally illuminated freestanding brand sign and steel column set on existing anchor bolts and concrete foundation.

This document has been electronically signed and sealed by John H. Omslaer, P.E. on date using a SHA-1 authentication code. Printed copies are not considered signed and sealed and the SHA-1 authentification code must be verified on any electronic copies per Rule 62-30.060, F.A.C.

John H Omslaer

Digitally signed by John H Omslaer
DN: c=US, st=Florida, l=Pompano Beach, o=Dynamic Engineering Solutions Inc, cn=John H Omslaer, email=des_inc@bellsouth.net
Date: 2022.08.11 07:10:47 -04'00'

NAME	PATTISON SIGN GROUP INC
JOB NAME	ROUNTREE MOORE KIA
ADDRESS	2528 US HIGHWAY 90 WEST LAKE CITY, FL 32055
DESIGNER	DWG NO. / SALES REP. / DATE
S.E.	B22712 / GARY / 07/22/2022

APPROVAL

REVISIONS

This Design is the property of Mcneill Signs, Inc. and may not be reproduced without permission.

mcneill
McNeill Signs, Inc.
Serving Florida since 1956
400 Ninth Street, Bunnell, FL 32110 Ph. 386-586-7100 Fax. 386-586-0073
Website - www.mcneillsigns.com Sales Dept. E-mail - sales@mcneillsigns.com

5496 7

SIGN E01

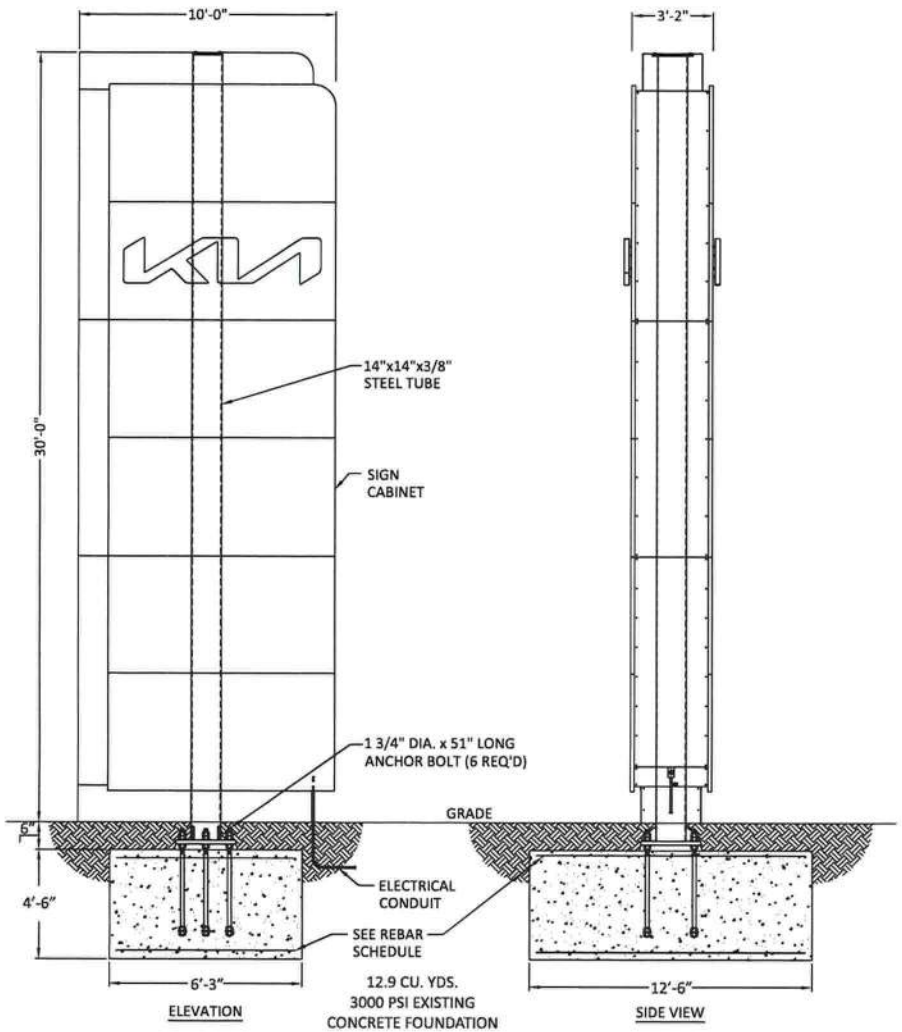

General Notes:

1. Concrete shall be mixed to attain a minimum 28 day compressive strength of 3000 psi.
2. Steel reinforcing bars shall conform to ASTM A615, Grade 60 with deformations in accordance with ASTM A305.
3. All voids between column base plate and foundation surface shall be completely filled with high-strength, non-shrink grout.
4. Anchor bolts shall meet ASTM F1554 Grade 36. Exposed surfaces shall be galvanized or coated to prevent corrosion.
5. All support members shall be free from defects. Steel tube shall meet ASTM A500 Grade B with a minimum yield strength of 46000 psi. Steel angle, channel and plate shall meet ASTM A36. Extruded aluminum shapes shall be 6061-T6 alloy. Aluminum sheet shall be 3003-H14 alloy. Aluminum plate shall be 5052-H34 alloy.
6. Welds shall be made with low hydrogen E70xx electrodes for steel & with 5356 filler for aluminum by persons qualified in accordance with AWS standards within the past two years.
7. All structural bolts shall conform to ASTM A325, and be zinc coated unless noted otherwise. When used with structural bolts, heavy hex nuts shall conform to ASTM A563, and washers shall conform to ASTM F436. Tighten all high strength bolts using the Turn-of-Nut method unless noted otherwise.

FREESTANDING BRAND SIGN TO BE INSTALL ON THE EXISTING 6'-3" X 12'-6" X 4'-6" DEEP REINFORCED CONCRETE FOUNDATION

ALL STEEL BELOW GRADE, INCLUDING EXPOSED ANCHOR BOLTS, SHALL BE COATED WITH CARBOLINE BITUMASTIC 50 COAL TAR OR EQUAL AFTER INSTALLATION & PRIOR TO LANDSCAPING.

REBAR SCHEDULE
SPREAD FOUNDATION — 3" MIN. COVER

PLACEMENT	SIZE	SPACING	QUANTITY	LENGTH
LONG BOTTOM STEEL	#5	12"	14	5'-3" long
LONG TOP STEEL	#5	12"	14	5'-3" long
BOTTOM CROSS STEEL	#5	12"	6	11'-6" long
TOP CROSS STEEL	#5	12"	6	11'-6" long

This document has been electronically signed and sealed by John H. Omslaer, P.E. on date using a SHA-1 authentication code. Printed copies are not considered signed and sealed and the SHA-1 authentification code must be verified on any electronic copies per Rule 62-30.060, F.A.C.

John H Omslaer

Digitally signed by John H Omslaer
DN: c=US, st=Florida, l=Pompano Beach, o=Dynamic Engineering Solutions Inc, cn=John H Omslaer, email=des_inc@bellsouth.net
Date: 2022.08.11 07:11:23 -04'00'

Dynamic Engineering Solutions, Inc.
John H. Omslaer, PE 52733, EB 26829
351 S. Cypress Road, Suite 303 • Pompano Beach, FL 33060

DESIGNED IN COMPLIANCE 2020 FLORIDA BUILDING CODE, 7th EDITION SECTION 1620 AND APPENDIX H AND ASCE 7-16
V(ULT) WIND SPEED 140 MPH • EXPOSURE CLASSIFICATION = C • RISK CATEGORY = II
DESIGN PRESSURE 26.1 PSF

NAME	PATTISON SIGN GROUP INC
JOB NAME	ROUNTREE MOORE KIA
ADDRESS	2528 US HIGHWAY 90 WEST LAKE CITY, FL 32055
DESIGNER	SALES REP.
S.E.	GARY
DWG NO.	B22713
DATE	07/22/2022

APPROVAL

REVISIONS

mcneill
McNeill Signs, Inc.
Serving Florida since 1956

This Design is the property of Mcneill Signs, Inc. and may not be reproduced without permission.
400 Ninth Street, Bunnell, FL 32110 Ph. 386-586-7100 Fax. 386-586-0073
Website - www.mcneillsigns.com Sales Dept. E-mail - sales@mcneillsigns.com

SIGN E01

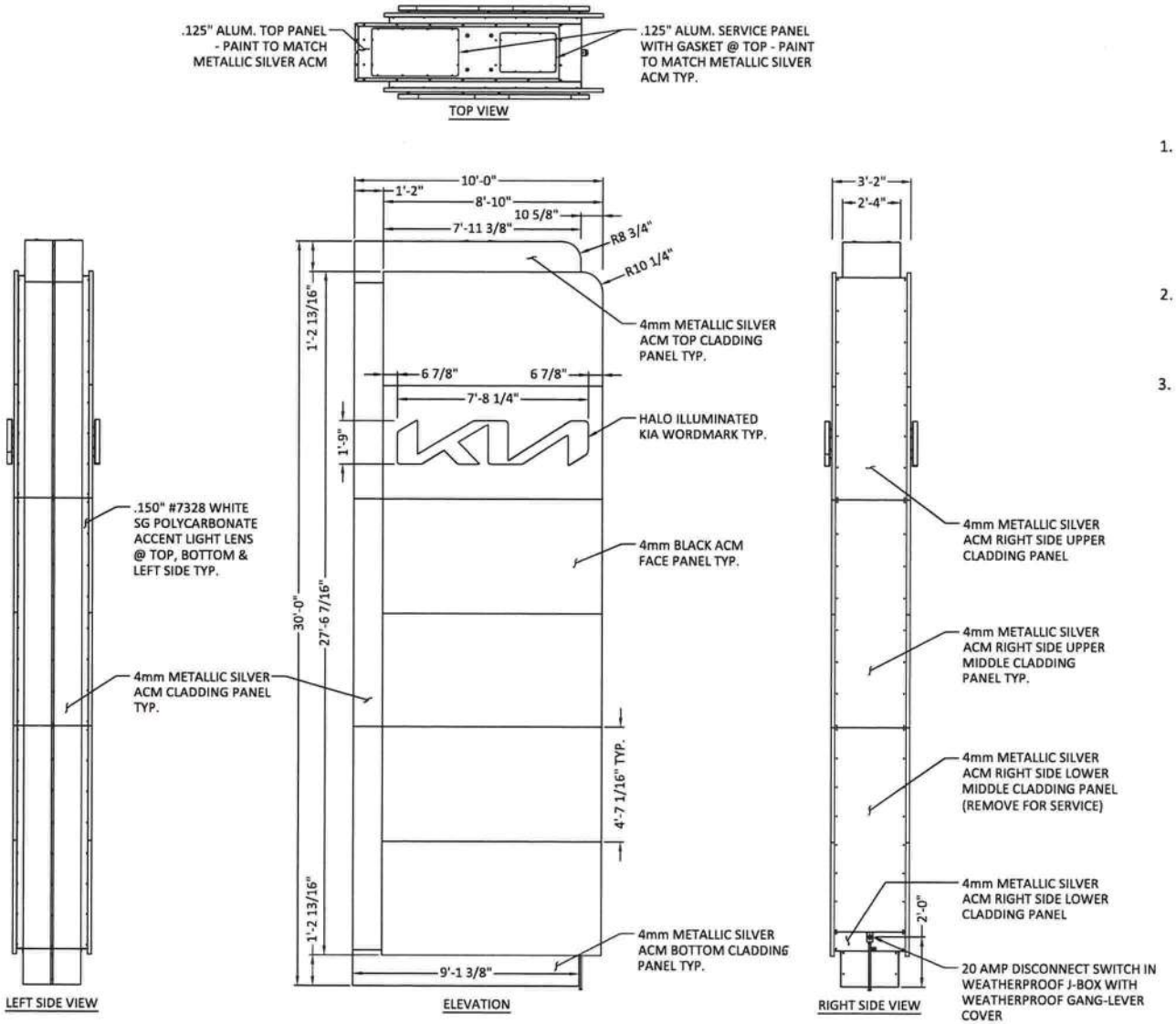

General Notes:

1. All support members shall be free from defects. Steel tube shall meet ASTM A500 Grade B with a minimum yield strength of 3000 psi. Steel angle, channel and plate shall meet ASTM A36. Extruded aluminum shapes shall be 6061-T6 alloy. Aluminum sheet shall be 3003-H14 alloy. Aluminum plate shall be 5052-H34 alloy.
2. Welds shall be made with low hydrogen E70xx electrodes for steel & with 5356 filler for aluminum by persons qualified in accordance with AWS standards within the past two years.
3. All structural bolts shall conform to ASTM A325, and be zinc coated unless noted otherwise. When used with structural bolts, heavy hex nuts shall conform to ASTM A563, and washers shall conform to ASTM F436. Tighten all high strength bolts using the Turn-of-Nut method unless noted otherwise.

ALL EXPOSED FASTENER HEADS SHALL BE PAINTED TO MATCH THE EXTERIOR CABINET FINISH

This document has been electronically signed and sealed by John H. Omslaer, P.E. on date using a SHA-1 authentication code. Printed copies are not considered signed and sealed and the SHA-1 authentification code must be verified on any electronic copies per Rule 62-30.060, F.A.C.

John H Omslaer

Digitally signed by John H Omslaer
DN: c=US, st=Florida, l=Pompano Beach, o=Dynamic Engineering Solutions Inc, cn=John H Omslaer, email=des_inc@bellsouth.net
Date: 2022.08.11 07:11:55 -04'00'

DESIGNED IN COMPLIANCE 2020 FLORIDA BUILDING CODE, 7th EDITION SECTION 1609 AND APPENDIX H AND ASCE 7-16
V(ULT) WIND SPEED 140 MPH • EXPOSURE CLASSIFICATION = C • RISK CATEGORY = II
DESIGN PRESSURE 26.1 PSF

Dynamic Engineering Solutions, Inc.
John H. Omslaer, PE 52733, EB 28629
351 S. Cypress Road, Suite 303 • Pompano Beach, FL 33060

NAME	PATTISON SIGN GROUP INC
JOB NAME	ROUNTREE MOORE KIA
ADDRESS	2528 US HIGHWAY 90 WEST LAKE CITY, FL 32055
DESIGNER	SALES REP. / DATE
S.E.	DWG NO. B22714 / GARY / 07/22/2022

APPROVAL

REVISIONS

This Design is the property of Mcneill Signs, Inc. and may not be reproduced without permission.

mcneill McNeill Signs, Inc. Serving Florida since 1956
400 Ninth Street, Bunnell, FL 32110 Ph. 386-586-7100 Fax. 386-586-0073
Website - www.mcneillsigns.com Sales Dept. E-mail - sales@mcneillsigns.com

SIGN E01

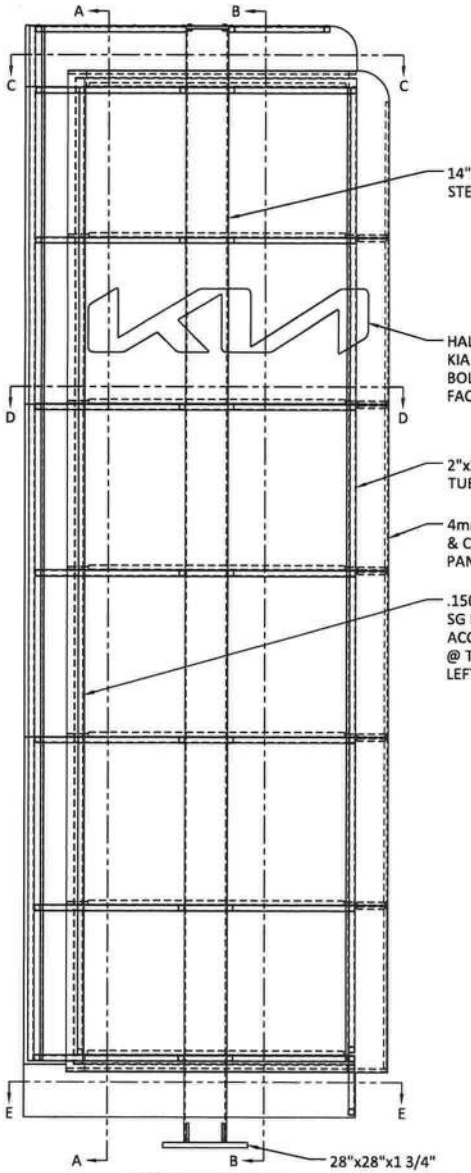

ASSEMBLY ELEVATION

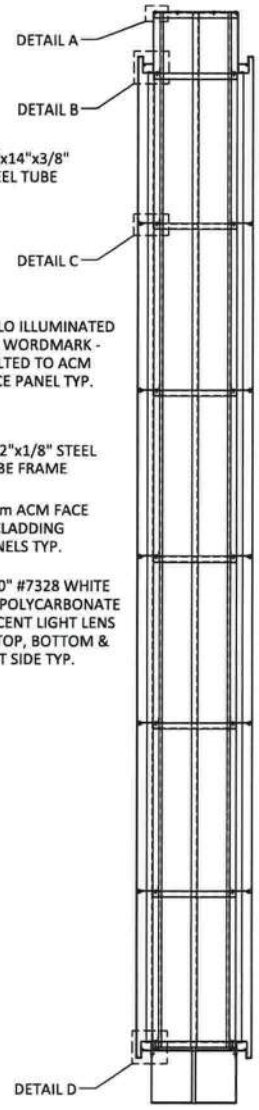

SECTION A-A

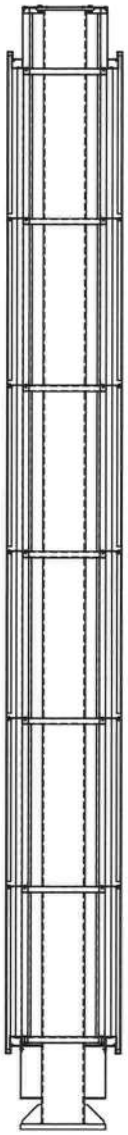

SECTION B-B

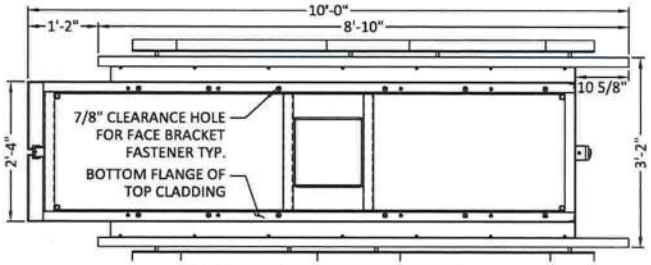

SECTION C-C (THROUGH TOP CLADDING)

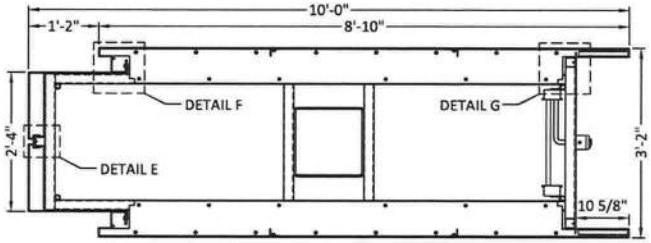

SECTION D-D (THROUGH SIGN & FACE PANEL SEAM)

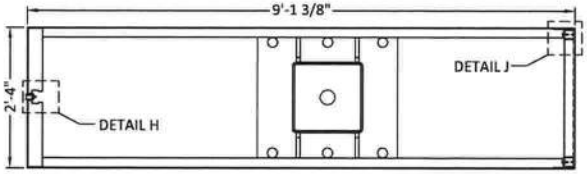

SECTION E-E (THROUGH BOTTOM CLADDING)

A COATING TYPE BARRIER SHALL BE APPLIED BETWEEN DISSIMILAR METALS TO PREVENT CORROSIVE REACTION

This document has been electronically signed and sealed by John H. Omslaer, P.E. on date using a SHA-1 authentication code. Printed copies are not considered signed and sealed and the SHA-1 authentification code must be verified on any electronic copies per Rule 62-30.060, F.A.C.

John H Omslaer

Digitally signed by John H Omslaer
DN: c=US, st=Florida, l=Pompano Beach, o=Dynamic Engineering Solutions Inc, cn=John H Omslaer, email=des_inc@bellsouth.net
Date: 2022.08.11 07:12:33 -04'00'

Dynamic Engineering Solutions, Inc.
John H. Omslaer, PE 52733, EB 28829
351 S. Cypress Road, Suite 303 • Pompano Beach, FL 33060

DESIGNED IN COMPLIANCE 2020 FLORIDA BUILDING CODE, 7th EDITION SECTION 1620 AND APPENDIX H AND ASCE 7-16
V(ULT) WIND SPEED 140 MPH • EXPOSURE CLASSIFICATION = C • RISK CATEGORY = II
DESIGN PRESSURE 26.1 PSF

NAME	PATTISON SIGN GROUP INC
JOB NAME	ROUNTREE MOORE KIA
ADDRESS	2528 US HIGHWAY 90 WEST LAKE CITY, FL 32055
DESIGNER	DWG NO. / SALES REP. / DATE
S.E.	B22715 / GARY / 07/22/2022

APPROVAL

REVISIONS

This Design is the property of Mcneill Signs, Inc. and may not be reproduced without permission.

400 Ninth Street, Bunnell, FL 32110 Ph. 386-586-7100 Fax. 386-586-0073
Website - www.mcneillsigns.com Sales Dept. E-mail - sales@mcneillsigns.com

mcneill
McNeill Signs, Inc.
Serving Florida since 1956

SIGN E01

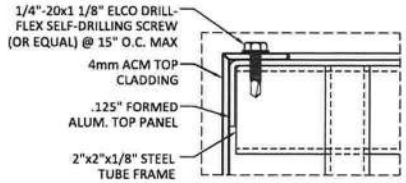

DETAIL A

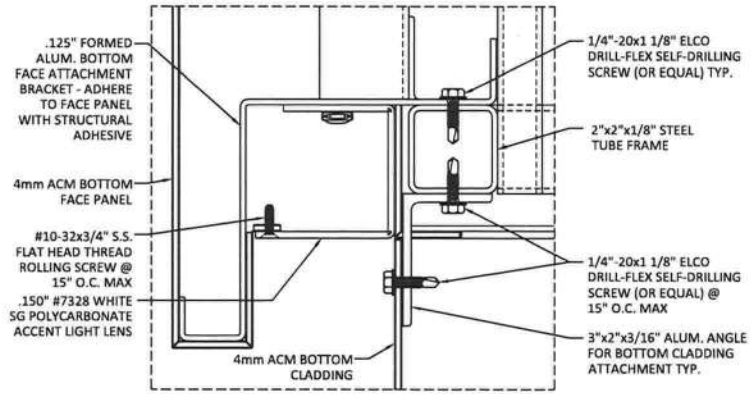

DETAIL D

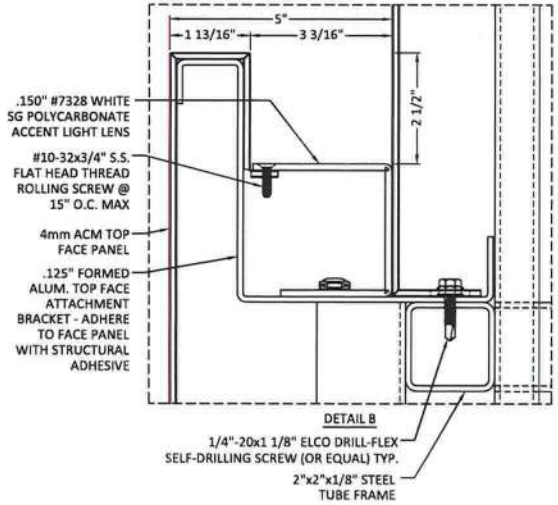

DETAIL B

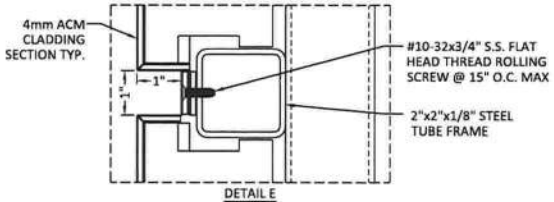

DETAIL E

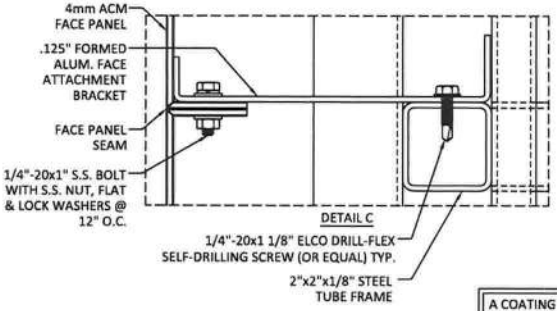

DETAIL C

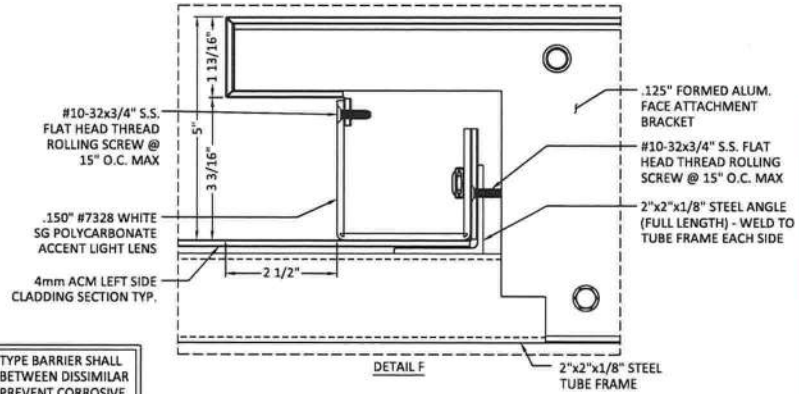

DETAIL F

A COATING TYPE BARRIER SHALL BE APPLIED BETWEEN DISSIMILAR METALS TO PREVENT CORROSIVE REACTION

This document has been electronically signed and sealed by John H. Omslaer, P.E. on date using a SHA-1 authentication code. Printed copies are not considered signed and sealed and the SHA-1 authentification code must be verified on any electronic copies per Rule 62-30.060, F.A.C.

John H Omslaer

Digitally signed by John H Omslaer
DN: c=US, st=Florida, l=Pompano Beach, o=Dynamic Engineering Solutions Inc, cn=John H Omslaer, email=des_inc@bellsouth.net
Date: 2022.08.11 07:13:18 -04'00'

Dynamic Engineering Solutions, Inc.
John H. Omslaer, PE 62733, EB 28829
351 S. Cypress Road, Suite 303 • Pompano Beach, FL 33060

DESIGNED IN COMPLIANCE 2020 FLORIDA BUILDING CODE, 7th EDITION SECTION 1620 AND APPENDIX H AND ASCE 7-16
V(ULT) WIND SPEED 140 MPH • EXPOSURE CLASSIFICATION = C • RISK CATEGORY = II
DESIGN PRESSURE 26.1 PSF

NAME	PATTISON SIGN GROUP INC
JOB NAME	ROUNTREE MOORE KIA
ADDRESS	2528 US HIGHWAY 90 WEST LAKE CITY, FL 32055
DESIGNER	DWG NO. / SALES REP. / DATE
S.E.	B22716 / GARY / 07/22/2022

APPROVAL

REVISIONS

This Design is the property of Mcneill Signs, Inc. and may not be reproduced without permission.

mcneill
McNeill Signs, Inc.
Serving Florida since 1956
400 Ninth Street, Bunnell, FL 32110 Ph. 386-586-7100 Fax. 386-586-0073
Website - www.mcneillsigns.com Sales Dept. E-mail - sales@mcneillsigns.com

SIGN E01

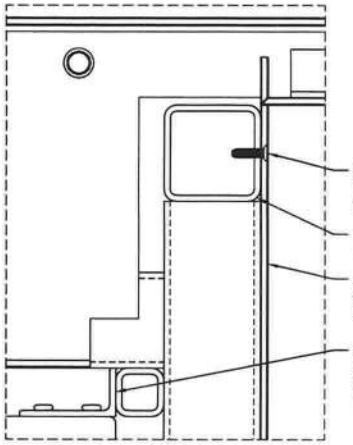

DETAIL G

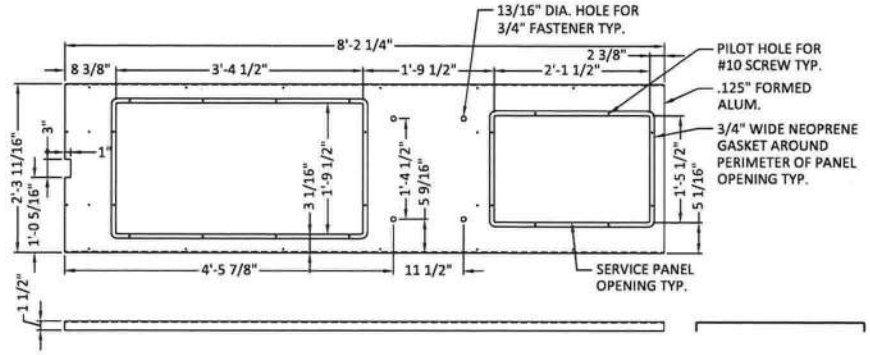

TOP PANEL DETAIL

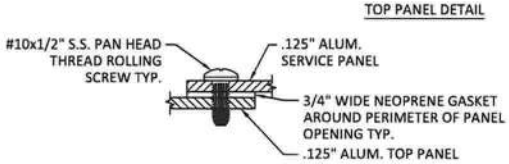

SERVICE PANEL ATTACHMENT DETAIL

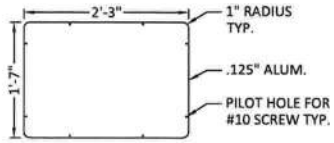

SMALL TOP SERVICE PANEL DETAIL

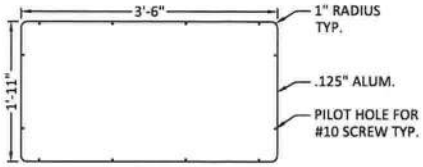

LARGE TOP SERVICE PANEL DETAIL

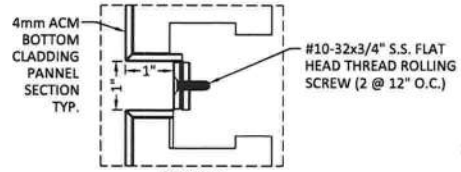

DETAIL H

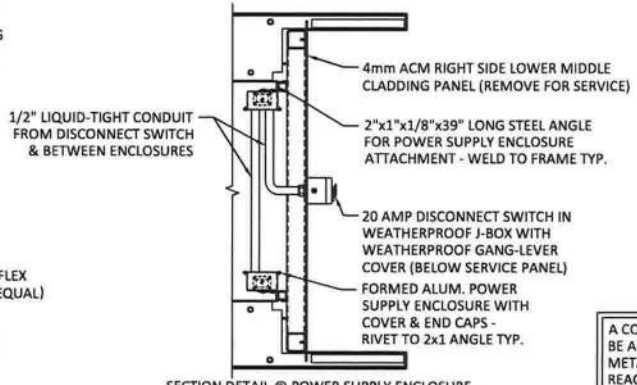

SECTION DETAIL @ POWER SUPPLY ENCLOSURE

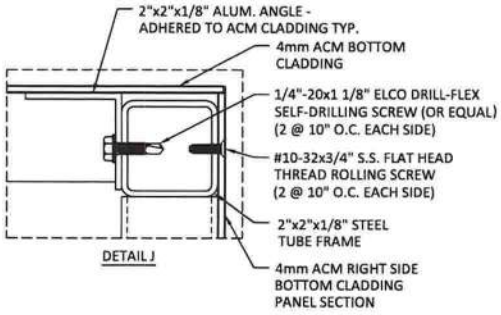

DETAIL J

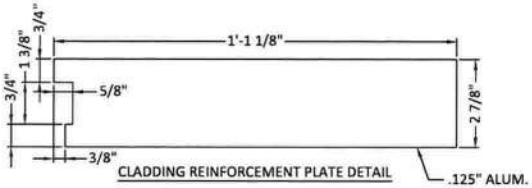

CLADDING REINFORCEMENT PLATE DETAIL

A COATING TYPE BARRIER SHALL BE APPLIED BETWEEN DISSIMILAR METALS TO PREVENT CORROSIVE REACTION

This document has been electronically signed and sealed by John H. Omslaer, P.E. on date using a SHA-1 authentication code. Printed copies are not considered signed and sealed and the SHA-1 authentification code must be verified on any electronic copies per Rule 62-30.060, F.A.C.

John H Omslaer

Digitally signed by John H Omslaer
DN: c=US, st=Florida, l=Pompano Beach, o=Dynamic Engineering Solutions Inc, cn=John H Omslaer, email=des_inc@bellsouth.net
Date: 2022.08.11 07:13:59 -04'00'

DESIGNED IN COMPLIANCE 2020 FLORIDA BUILDING CODE, 7th EDITION SECTION 1620 AND APPENDIX H AND ASCE 7-16
(VULT) WIND SPEED 140 MPH • EXPOSURE CLASSIFICATION = C • RISK CATEGORY = II
DESIGN PRESSURE 26.1 PSF

Dynamic Engineering Solutions, Inc.
John H. Omslaer, PE 52733, EB 28629
351 S. Cypress Road, Suite 303 • Pompano Beach, FL 33060

NAME	PATTISON SIGN GROUP INC
JOB NAME	ROUNTREE MOORE KIA
ADDRESS	2528 US HIGHWAY 90 WEST LAKE CITY, FL 32055
DESIGNER	DWG NO. / SALES REP. / DATE
S.E.	B22717 / GARY / 07/22/2022

APPROVAL

REVISIONS

This Design is the property of Mcneill Signs, Inc. and may not be reproduced without permission.

mcneill McNeill Signs, Inc.
Serving Florida since 1956
400 Ninth Street, Bunnell, FL 32110 Ph. 386-586-7100 Fax. 386-586-0073
Website - www.mcneillsigns.com Sales Dept. E-mail - sales@mcneillsigns.com

SIGN E01

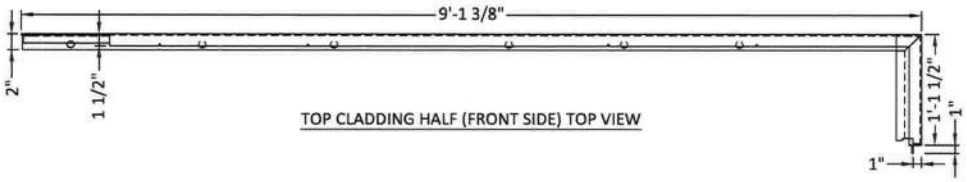

TOP CLADDING HALF (FRONT SIDE) TOP VIEW

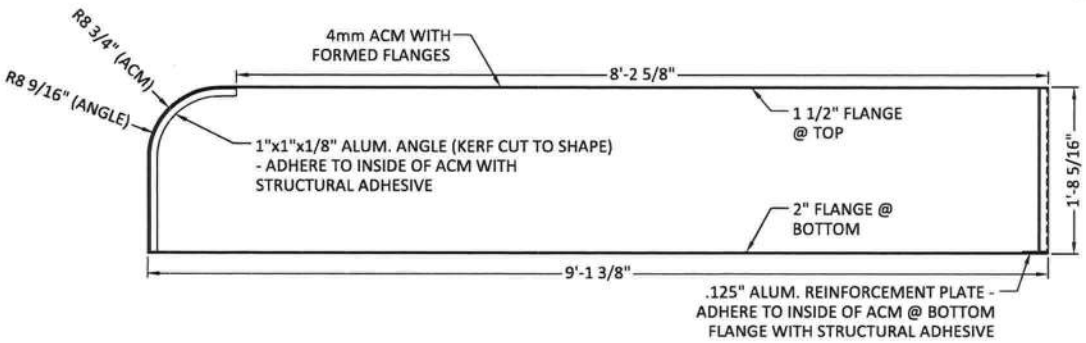

TOP CLADDING HALF (FRONT SIDE) ELEVATION

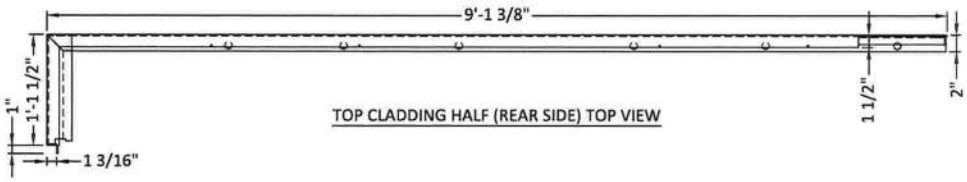

TOP CLADDING HALF (REAR SIDE) TOP VIEW

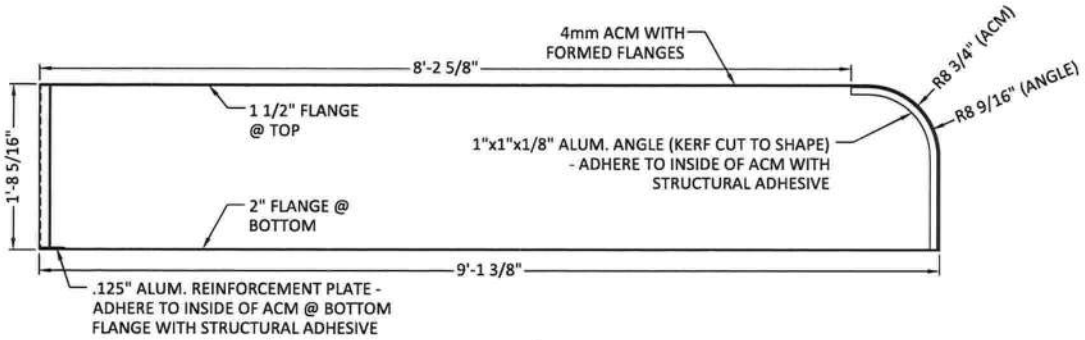

TOP CLADDING HALF (REAR SIDE) ELEVATION

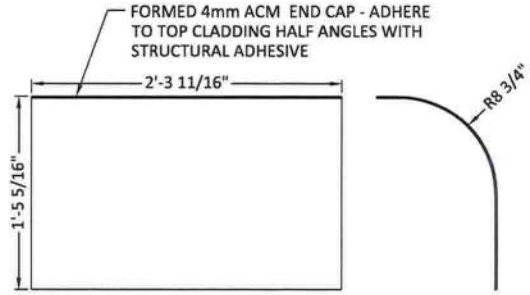

TOP CLADDING END CAP DETAIL

This document has been electronically signed and sealed by John H. Omslaer, P.E. on date using a SHA-1 authentication code. Printed copies are not considered signed and sealed and the SHA-1 authentification code must be verified on any electronic copies per Rule 62-30.060, F.A.C.

John H Omslaer

Digitally signed by John H Omslaer
DN: c=US, st=Florida, l=Pompano Beach, o=Dynamic Engineering Solutions Inc, cn=John H Omslaer, email=des_inc@bellsouth.net
Date: 2022.08.11 07:14:42 -04'00'

Dynamic Engineering Solutions, Inc.
John H. Omslaer, PE 52733, EB 26829
351 S. Cypress Road, Suite 303 • Pompano Beach, FL 33060

DESIGNED IN COMPLIANCE 2020 FLORIDA BUILDING CODE, 7th EDITION SECTION 1609 AND APPENDIX H AND ASCE 7-16
V(ULT) WIND SPEED 140 MPH • EXPOSURE CLASSIFICATION = C • RISK CATEGORY = II
DESIGN PRESSURE 26.1 PSF

NAME	PATTISON SIGN GROUP INC
JOB NAME	ROUNTREE MOORE KIA
ADDRESS	2528 US HIGHWAY 90 WEST LAKE CITY, FL 32055
DESIGNER	DWG NO. B22718 / SALES REP. GARY / DATE 07/22/2022
S.E.	

APPROVAL

REVISIONS

This Design is the property of Mcneill Signs, Inc. and may not be reproduced without permission.

mcneill
McNeill Signs, Inc.
Serving Florida since 1956
400 Ninth Street, Bunnell, FL 32110 Ph. 386-586-7100 Fax. 386-586-0073
Website - www.mcneillsigns.com Sales Dept. E-mail - sales@mcneillsigns.com

SIGN E01

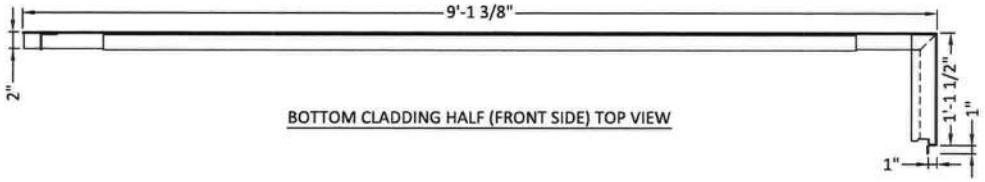

BOTTOM CLADDING HALF (FRONT SIDE) TOP VIEW

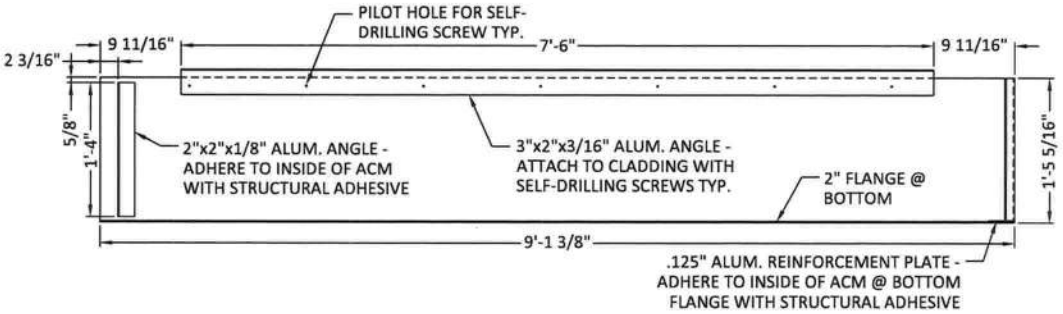

BOTTOM CLADDING HALF (FRONT SIDE) ELEVATION

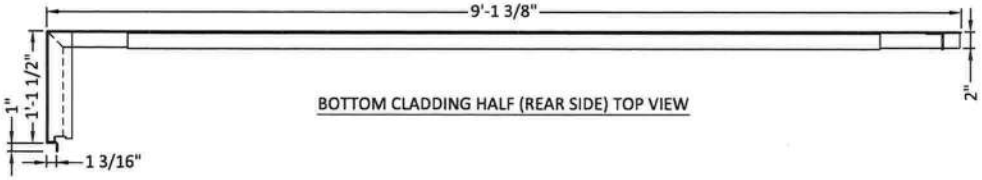

BOTTOM CLADDING HALF (REAR SIDE) TOP VIEW

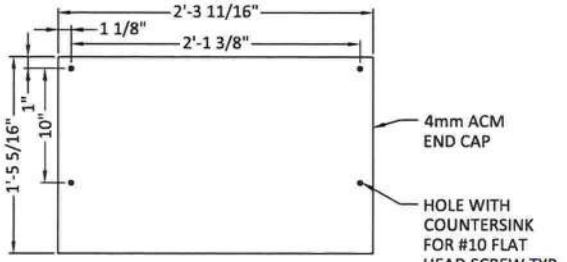

BOTTOM CLADDING END CAP DETAIL

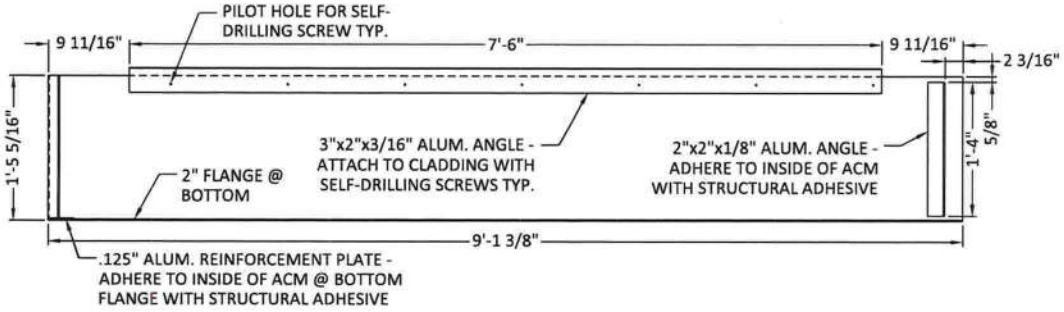

BOTTOM CLADDING HALF (REAR SIDE) ELEVATION

This document has been electronically signed and sealed by John H. Omslaer, P.E. on date using a SHA-1 authentication code. Printed copies are not considered signed and sealed and the SHA-1 authentification code must be verified on any electronic copies per Rule 62-30.060, F.A.C.

John H Omslaer

Digitally signed by John H Omslaer
DN: c=US, st=Florida, l=Pompano Beach, o=Dynamic Engineering Solutions Inc, cn=John H Omslaer, email=des_inc@bellsouth.net
Date: 2022.08.11 07:15:26 -04'00'

Dynamic Engineering Solutions, Inc.
John H. Omslaer, PE 52733, EB 26829
351 S. Cypress Road, Suite 303 • Pompano Beach, FL 33060

DESIGNED IN COMPLIANCE 2020 FLORIDA BUILDING CODE, 7th EDITION SECTION 1620 AND APPENDIX H AND ASCE 7-16
V(ULT) WIND SPEED 140 MPH • EXPOSURE CLASSIFICATION = C • RISK CATEGORY = II
DESIGN PRESSURE 26.1 PSF

NAME	PATTISON SIGN GROUP INC
JOB NAME	ROUNTREE MOORE KIA
ADDRESS	2528 US HIGHWAY 90 WEST LAKE CITY, FL 32055
DESIGNER	DWG NO. B22719 / SALES REP. GARY / DATE 07/22/2022
S.E.	

APPROVAL

REVISIONS

This Design is the property of Mcneill Signs, Inc. and may not be reproduced without permission.

mcneill
McNeill Signs, Inc.
Serving Florida since 1956
400 Ninth Street, Bunnell, FL 32110 Ph. 386-586-7100 Fax. 386-586-0073
Website - www.mcneillsigns.com Sales Dept. E-mail - sales@mcneillsigns.com

SIGN E01

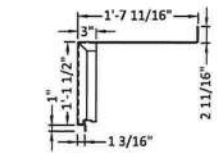

LEFT SIDE CLADDING SECTION HALF
(REAR SIDE) TOP VIEW

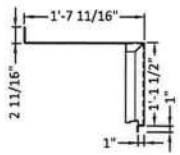

LEFT SIDE CLADDING SECTION HALF
(FRONT SIDE) TOP VIEW

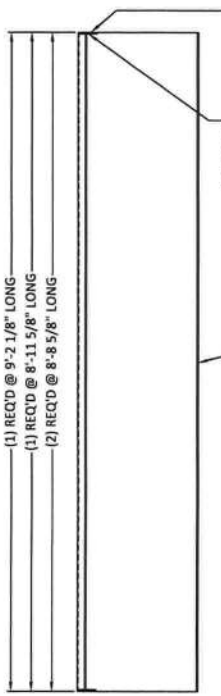

LEFT SIDE CLADDING SECTION HALF
(REAR SIDE) ELEVATION

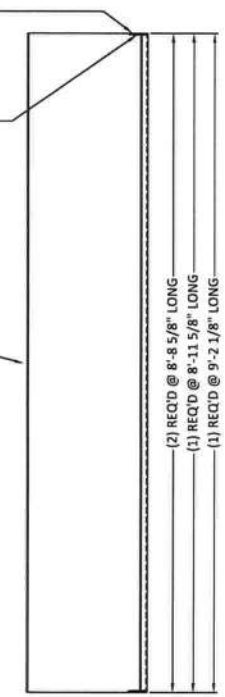

LEFT SIDE CLADDING SECTION HALF
(FRONT SIDE) ELEVATION

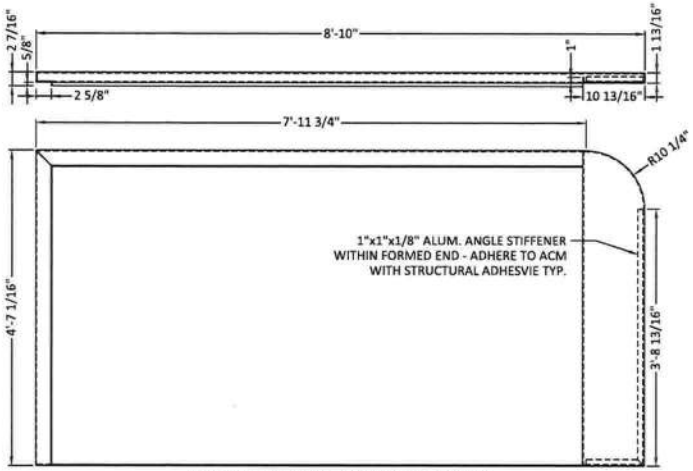

TOP FACE PANEL DETAIL - RIGHT SIDE (REAR) SHOWN
(RIGHT & LEFT SIDE VERSIONS REQUIRED)

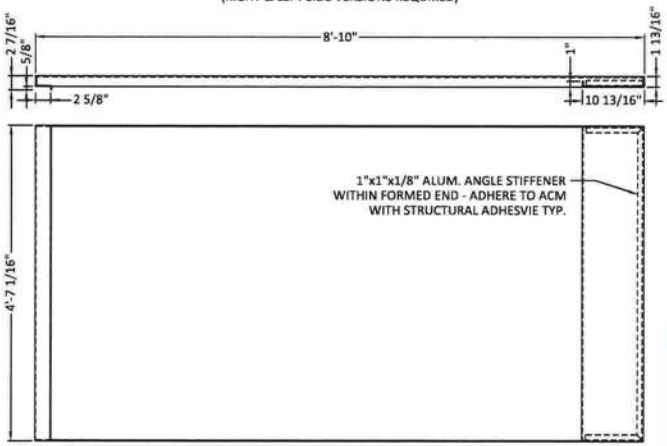

MIDDLE FACE PANEL DETAIL - RIGHT SIDE (REAR) SHOWN
(4 SETS OF RIGHT & LEFT SIDE VERSIONS REQUIRED)

This document has been electronically signed and sealed by John H. Omslaer, P.E. on date using a SHA-1 authentication code. Printed copies are not considered signed and sealed and the SHA-1 authentification code must be verified on any electronic copies per Rule 62-30.060, F.A.C.

John H Omslaer

Digitally signed by John H Omslaer
DN: c=US, st=Florida, l=Pompano Beach, o=Dynamic Engineering Solutions Inc, cn=John H Omslaer, email=des_inc@bellsouth.net
Date: 2022.08.11 07:17:05 -04'00'

Dynamic Engineering Solutions, Inc.
John H. Omslaer, PE 52733, EB 26829
351 S. Cypress Road, Suite 303 • Pompano Beach, FL 33060

DESIGNED IN COMPLIANCE 2020 FLORIDA BUILDING CODE, 7th EDITION SECTION 1620 AND APPENDIX H AND ASCE 7-16
V(ULT) WIND SPEED 140 MPH • EXPOSURE CLASSIFICATION = C • RISK CATEGORY = II
DESIGN PRESSURE 26.1 PSF

NAME	PATTISON SIGN GROUP INC
JOB NAME	ROUNTREE MOORE KIA
ADDRESS	2528 US HIGHWAY 90 WEST LAKE CITY, FL 32055
DESIGNER	DWG NO. B22720 / SALES REP. GARY / DATE 07/22/2022
S.E.	

APPROVAL

REVISIONS

This Design is the property of Mcneill Signs, Inc. and may not be reproduced without permission.

mcneill
McNeill Signs, Inc.
Serving Florida since 1956
400 Ninth Street, Bunnell, FL 32110 Ph. 386-586-7100 Fax. 386-586-0073
Website - www.mcneillsigns.com Sales Dept. E-mail - sales@mcneillsigns.com

SIGN E01

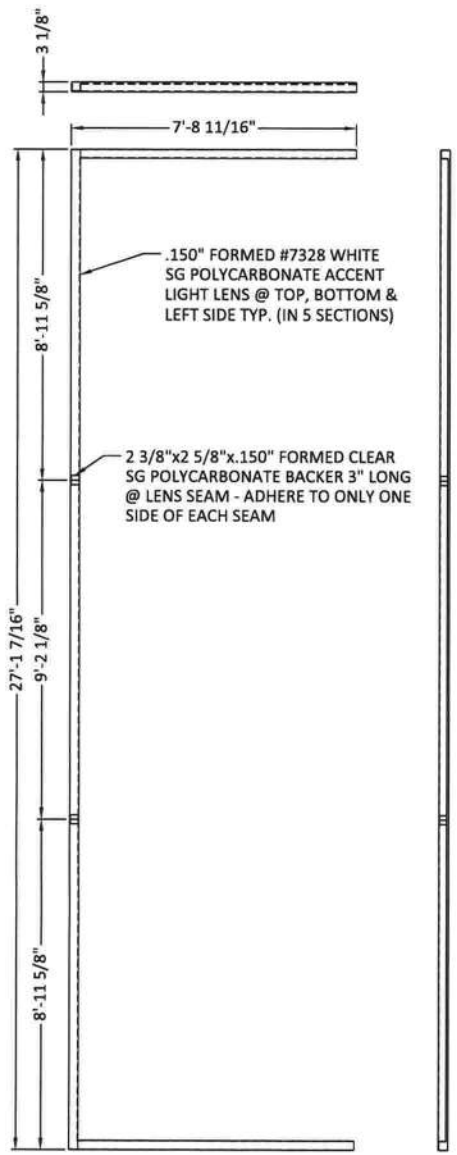

ACCENT LENS DETAIL - LEFT SIDE (FRONT) SHOWN
(RIGHT & LEFT SIDE VERSIONS REQUIRED)

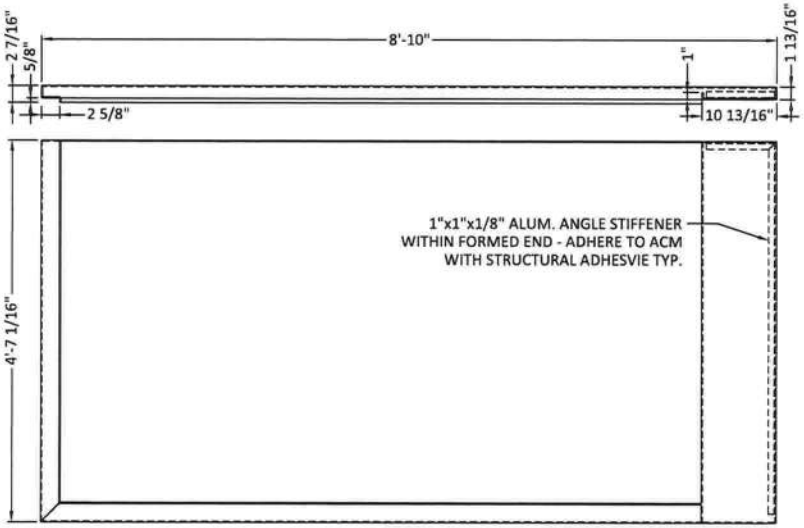

BOTTOM FACE PANEL DETAIL - RIGHT SIDE (REAR) SHOWN
(RIGHT & LEFT SIDE VERSIONS REQUIRED)

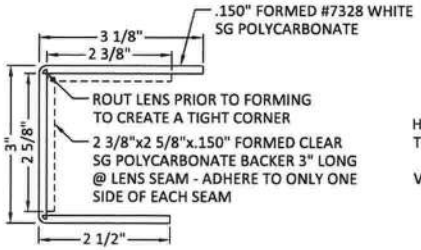

ACCENT LENS PROFILE

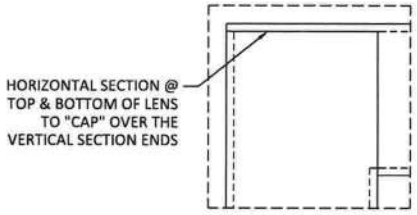

TYPICAL LENS CORNER DETAIL

This document has been electronically signed and sealed by John H. Omslaer, P.E. on date using a SHA-1 authentication code. Printed copies are not considered signed and sealed and the SHA-1 authentification code must be verified on any electronic copies per Rule 62-30.060, F.A.C.

John H Omslaer

Digitally signed by John H Omslaer
DN: c=US, st=Florida, l=Pompano Beach, o=Dynamic Engineering Solutions Inc, cn=John H Omslaer, email=des_inc@bellsouth.net
Date: 2022.08.11 07:17:52 -04'00'

Dynamic Engineering Solutions, Inc.
John H. Omslaer, PE 52733, EB 28829
351 S. Cypress Road, Suite 303 • Pompano Beach, FL 33060

DESIGNED IN COMPLIANCE 2020 FLORIDA BUILDING CODE, 7th EDITION SECTION 1620 AND APPENDIX H AND ASCE 7-16
VULT) WIND SPEED 140 MPH • EXPOSURE CLASSIFICATION = C • RISK CATEGORY = II
DESIGN PRESSURE 26.1 PSF

NAME	PATTISON SIGN GROUP INC
JOB NAME	ROUNTREE MOORE KIA
ADDRESS	2528 US HIGHWAY 90 WEST LAKE CITY, FL 32055
DESIGNER	DWG NO. B22721 / SALES REP. GARY / DATE 07/22/2022
S.E.	

APPROVAL

REVISIONS

This Design is the property of Mcneill Signs, Inc. and may not be reproduced without permission.

400 Ninth Street, Bunnell, FL 32110 Ph. 386-586-7100 Fax. 386-586-0073
Website - www.mcneillsigns.com Sales Dept. E-mail - sales@mcneillsigns.com

mcneill
McNeill Signs, Inc.
Serving Florida since 1956

SIGN E01

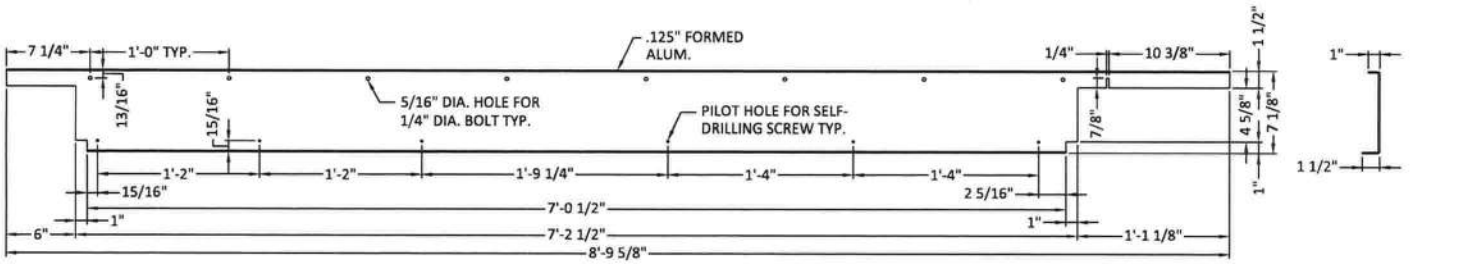

FACE PANEL ATTACHMENT BRACKET (AT SEAM) DETAIL - RIGHT SIDE (REAR) SHOWN
(5 SETS OF RIGHT & LEFT SIDE VERSIONS REQUIRED)

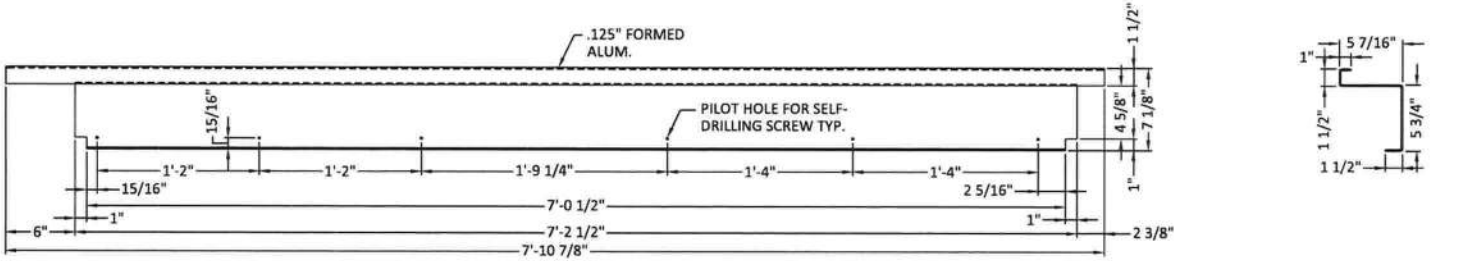

TOP FACE PANEL ATTACHMENT BRACKET DETAIL - RIGHT SIDE (REAR) SHOWN
(RIGHT & LEFT SIDE VERSIONS REQUIRED)

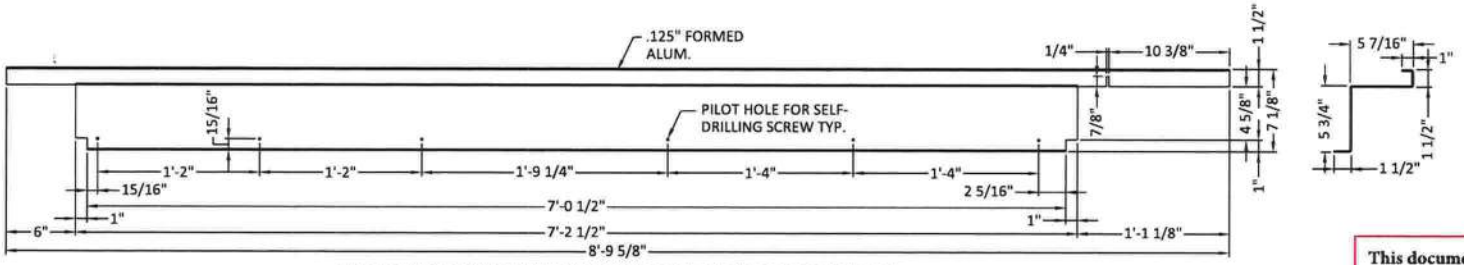

BOTTOM FACE PANEL ATTACHMENT BRACKET DETAIL - RIGHT SIDE (REAR) SHOWN
(RIGHT & LEFT SIDE VERSIONS REQUIRED)

This document has been electronically signed and sealed by John H. Omslaer, P.E. on date using a SHA-1 authentication code. Printed copies are not considered signed and sealed and the SHA-1 authentification code must be verified on any electronic copies per Rule 62-30.060, F.A.C.

John H Omslaer

Digitally signed by John H Omslaer
DN: c=US, st=Florida, l=Pompano Beach, o=Dynamic Engineering Solutions Inc, cn=John H Omslaer, email=des_inc@bellsouth.net
Date: 2022.08.11 07:18:52 -04'00'

DESIGNED IN COMPLIANCE 2020 FLORIDA BUILDING CODE, 7th EDITION SECTION 1620 AND APPENDIX H AND ASCE 7-16
(VULT) WIND SPEED 140 MPH • EXPOSURE CLASSIFICATION = C • RISK CATEGORY = II
DESIGN PRESSURE 26.1 PSF

Dynamic Engineering Solutions, Inc.
John H. Omslaer, PE 52733, EB 28629
351 S. Cypress Road, Suite 303 • Pompano Beach, FL 33060

NAME	PATTISON SIGN GROUP INC
JOB NAME	ROUNTREE MOORE KIA
ADDRESS	2528 US HIGHWAY 90 WEST LAKE CITY, FL 32055
DESIGNER	DWG NO. B22722 / SALES REP. GARY / DATE 07/22/2022
S.E.	

APPROVAL

REVISIONS

This Design is the property of Mcneill Signs, Inc. and may not be reproduced without permission.

400 Ninth Street, Bunnell, FL 32110 Ph. 386-586-7100 Fax. 386-586-0073
Website - www.mcneillsigns.com Sales Dept. E-mail - sales@mcneillsigns.com

mcneill
McNeill Signs, Inc.
Serving Florida since 1956

SIGN E01

ALL STEEL COMPONENTS SHALL BE PRIMED & PAINTED

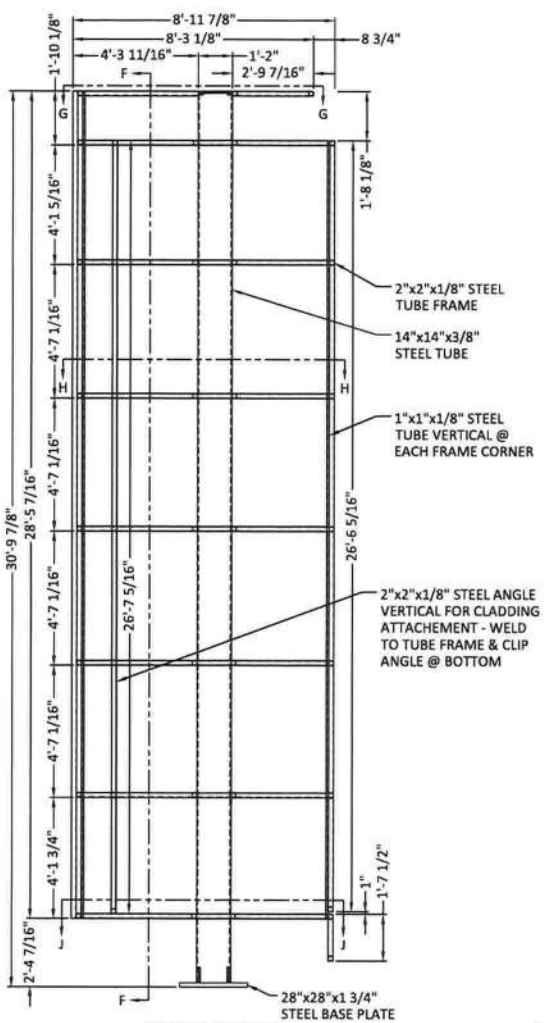

FRAMING ELEVATION

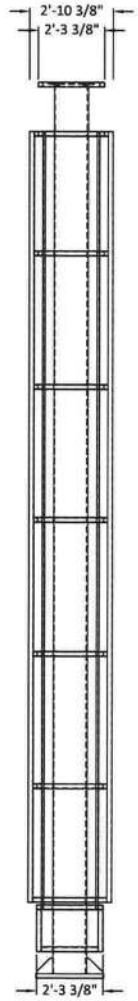

FRAMING RIGHT SIDE VIEW

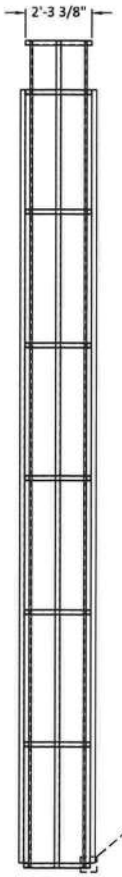

SECTION F-F

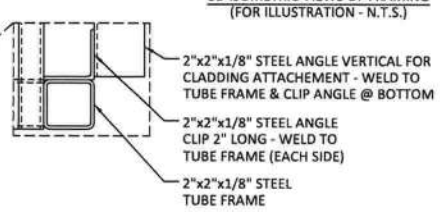

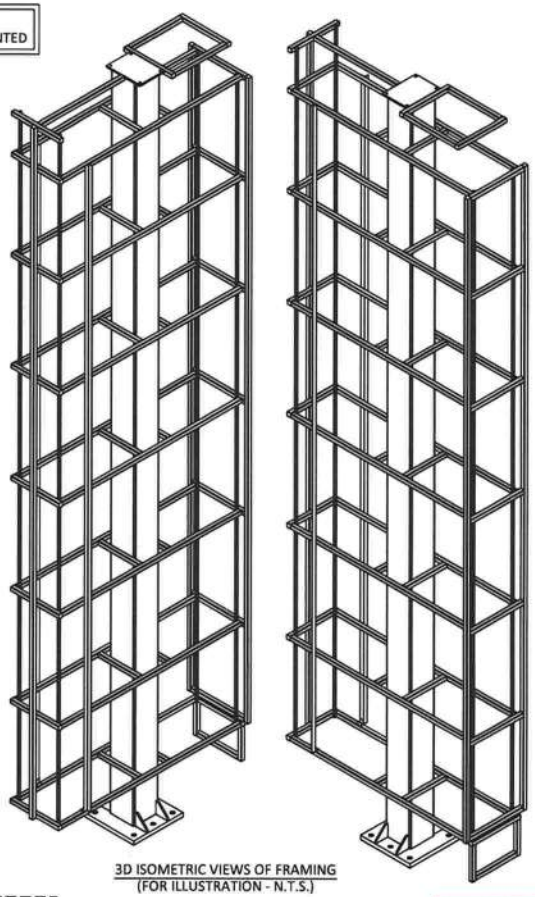

3D ISOMETRIC VIEWS OF FRAMING
(FOR ILLUSTRATION - N.T.S.)

This document has been electronically signed and sealed by John H. Omslaer, P.E. on date using a SHA-1 authentication code. Printed copies are not considered signed and sealed and the SHA-1 authentification code must be verified on any electronic copies per Rule 62-30.060, F.A.C.

John H Omslaer

Digitally signed by John H Omslaer
DN: c=US, st=Florida, l=Pompano Beach, o=Dynamic Engineering Solutions Inc, cn=John H Omslaer, email=des_inc@bellsouth.net
Date: 2022.08.11 07:19:50 -04'00'

DESIGNED IN COMPLIANCE 2020 FLORIDA BUILDING CODE, 7th EDITION SECTION 1620 AND APPENDIX H AND ASCE 7-16
V(ULT) WIND SPEED 140 MPH • EXPOSURE CLASSIFICATION = C • RISK CATEGORY = II
DESIGN PRESSURE 26.1 PSF

Dynamic Engineering Solutions, Inc.
John H. Omslaer, PE 52733, EB 26829
351 S. Cypress Road, Suite 303 • Pompano Beach, FL 33060

NAME	PATTISON SIGN GROUP INC
JOB NAME	ROUNTREE MOORE KIA
ADDRESS	2528 US HIGHWAY 90 WEST LAKE CITY, FL 32055
DESIGNER	DWG NO. B22723 / SALES REP. GARY / DATE 07/22/2022
S.E.	

APPROVAL

REVISIONS

This Design is the property of Mcneill Signs, Inc. and may not be reproduced without permission.

mcneill
McNeill Signs, Inc.
Serving Florida since 1956
400 Ninth Street, Bunnell, FL 32110 Ph. 386-586-7100 Fax. 386-586-0073
Website - www.mcneillsigns.com Sales Dept. E-mail - sales@mcneillsigns.com

SIGN E01

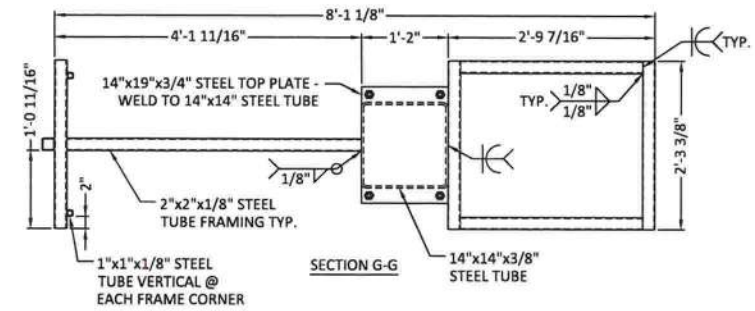

SECTION G-G

ALL STEEL COMPONENTS SHALL BE PRIMED & PAINTED

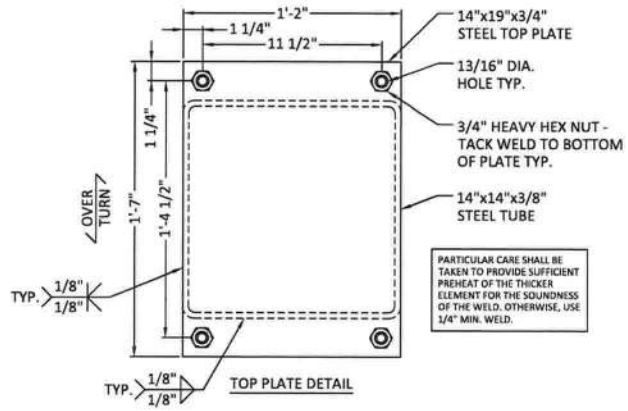

TOP PLATE DETAIL

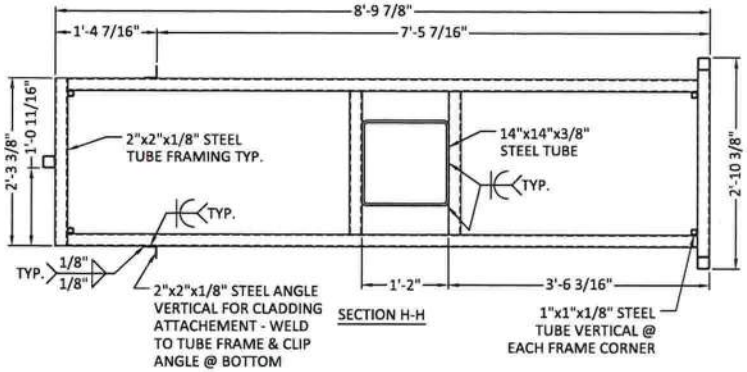

SECTION H-H

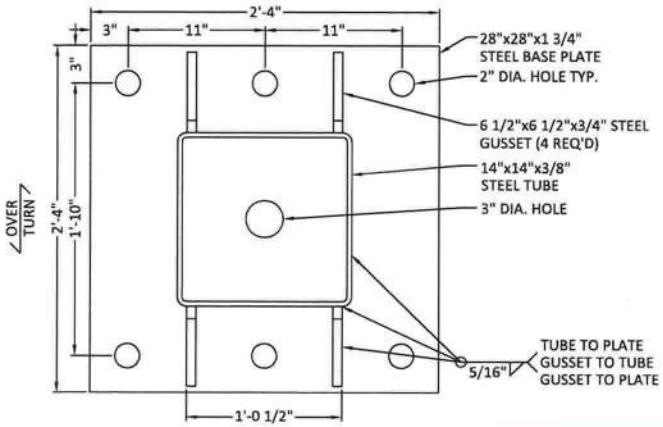

BASE PLATE DETAIL

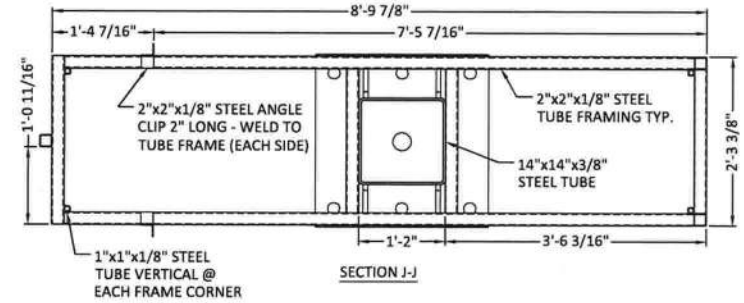

SECTION J-J

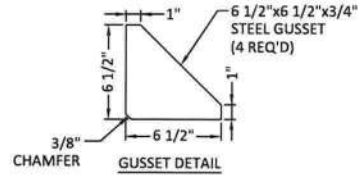

GUSSET DETAIL

This document has been electronically signed and sealed by John H. Omslaer, P.E. on date using a SHA-1 authentication code. Printed copies are not considered signed and sealed and the SHA-1 authentification code must be verified on any electronic copies per Rule 62-30.060, F.A.C.

John H Omslaer

Digitally signed by John H Omslaer
DN: c=US, st=Florida, l=Pompano Beach, o=Dynamic Engineering Solutions,Inc, cn=John H Omslaer, email=des_inc@bellsouth.net
Date: 2022.08.11 07:20:46 -04'00'

Dynamic Engineering Solutions, Inc.
John H. Omslaer, PE 52733, EB 26829
351 S. Cypress Road, Suite 303 • Pompano Beach, FL 33060

DESIGNED IN COMPLIANCE 2020 FLORIDA BUILDING CODE, 7th EDITION SECTION 1620 AND APPENDIX H AND ASCE 7-16
V(ULT) WIND SPEED 140 MPH • EXPOSURE CLASSIFICATION = C • RISK CATEGORY = II
DESIGN PRESSURE 26.1 PSF

NAME	PATTISON SIGN GROUP INC
JOB NAME	ROUNTREE MOORE KIA
ADDRESS	2528 US HIGHWAY 90 WEST LAKE CITY, FL 32055
DESIGNER	DWG NO. B22724 / SALES REP. GARY / DATE 07/22/2022
S.E.	

APPROVAL

REVISIONS

mcneill
McNeill Signs, Inc.
Serving Florida since 1956

This Design is the property of Mcneill Signs, Inc. and may not be reproduced without permission.
400 Ninth Street, Bunnell, FL 32110 Ph. 386-586-7100 Fax. 386-586-0073
Website - www.mcneillsigns.com Sales Dept. E-mail - sales@mcneillsigns.com

SIGN E01

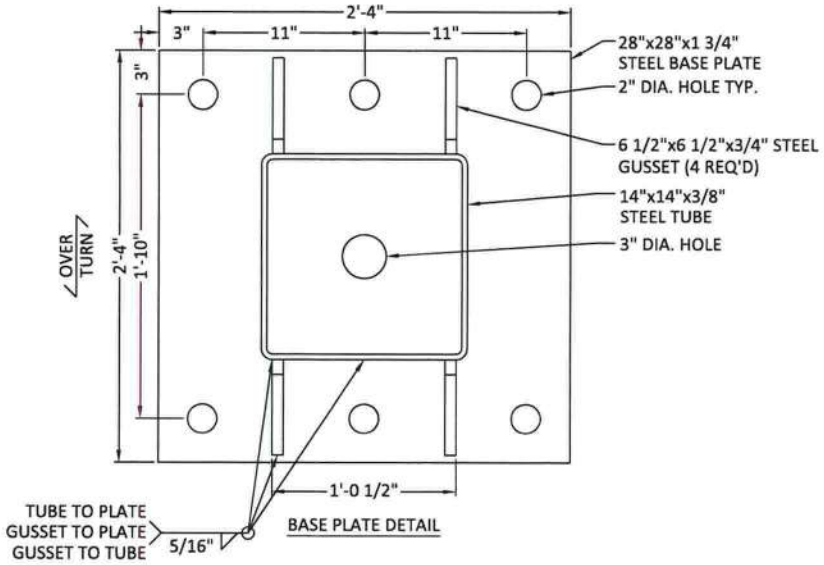

BASE PLATE DETAIL

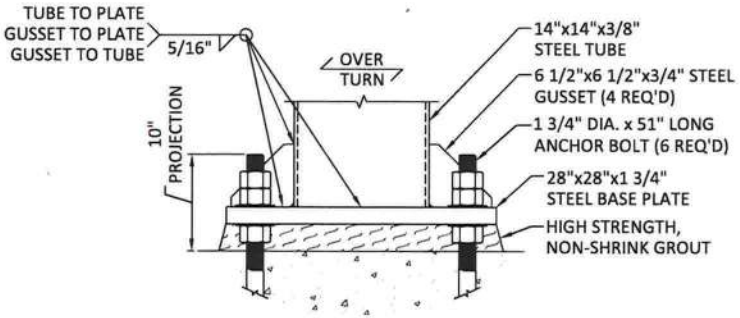

ANCHOR BOLT PROJECTION DETAIL

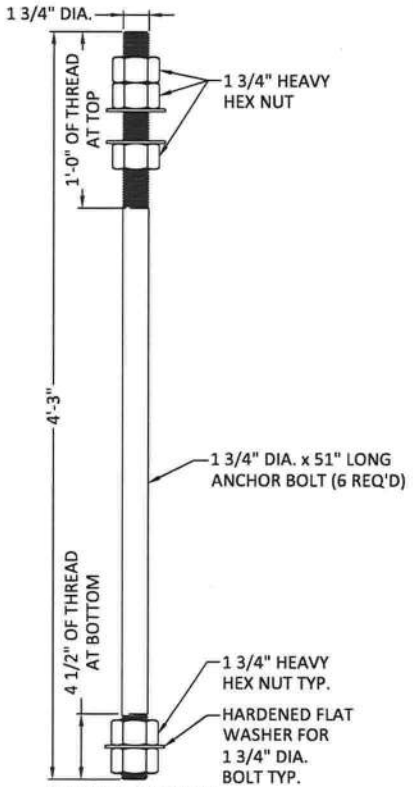

ANCHOR BOLT DETAIL

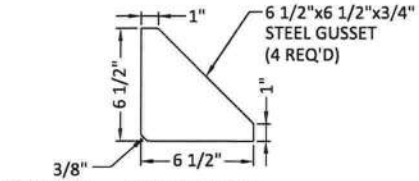

GUSSET DETAIL

ALL STEEL BELOW GRADE, INCLUDING EXPOSED ANCHOR BOLTS, SHALL BE COATED WITH CARBOLINE BITUMASTIC 50 COAL TAR OR EQUAL AFTER INSTALLATION AND PRIOR TO LANDSCAPING.

This document has been electronically signed and sealed by John H. Omslaer, P.E. on date using a SHA-1 authentication code. Printed copies are not considered signed and sealed and the SHA-1 authentification code must be verified on any electronic copies per Rule 62-30.060, F.A.C.

John H Omslaer

Digitally signed by John H Omslaer
DN: c=US, st=Florida, l=Pompano Beach, o=Dynamic Engineering Solutions Inc, cn=John H Omslaer, email=des_inc@bellsouth.net
Date: 2022.08.11 07:21:54 -04'00'

DESIGNED IN COMPLIANCE 2020 FLORIDA BUILDING CODE, 7th EDITION SECTION 1620 AND APPENDIX H AND ASCE 7-16
V(ULT) WIND SPEED 140 MPH • EXPOSURE CLASSIFICATION = C • RISK CATEGORY = II
DESIGN PRESSURE 26.1 PSF

Dynamic Engineering Solutions, Inc.
John H. Omslaer, PE 52733, EB 25829
351 S. Cypress Road, Suite 303 • Pompano Beach, FL 33060

NAME	PATTISON SIGN GROUP INC
JOB NAME	ROUNTREE MOORE KIA
ADDRESS	2528 US HIGHWAY 90 WEST LAKE CITY, FL 32055
DESIGNER	DWG NO. / SALES REP. / DATE
S.E.	B22725 / GARY / 07/22/2022

APPROVAL

REVISIONS

This Design is the property of Mcneill Signs, Inc. and may not be reproduced without permission.

mcneill
McNeill Signs, Inc.
Serving Florida since 1956
400 Ninth Street, Bunnell, FL 32110 Ph. 386-586-7100 Fax. 386-586-0073
Website - www.mcneillsigns.com Sales Dept. E-mail - sales@mcneillsigns.com

SIGN E01

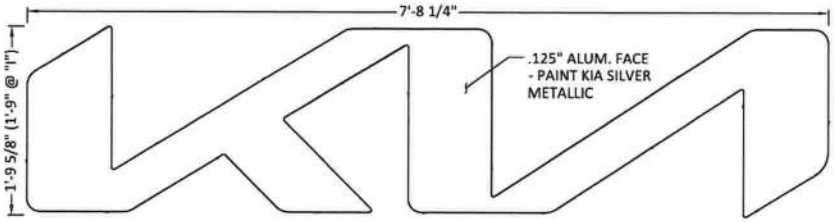

WORDMARK ELEVATION

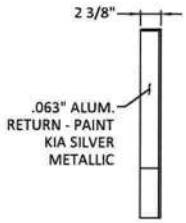

WORDMARK SIDE VIEW

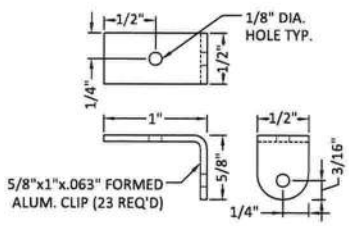

FORMED CLIP DETAIL

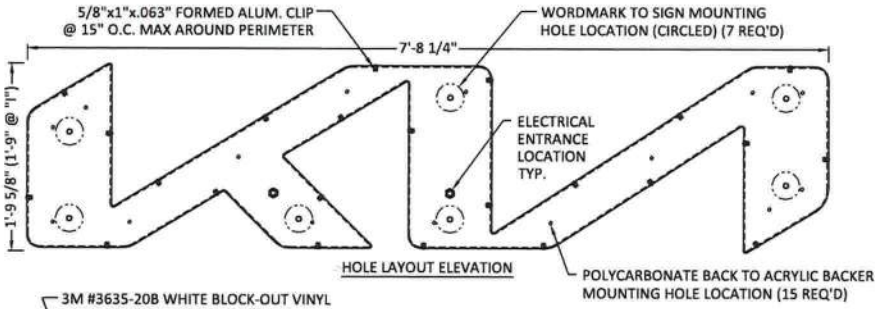

HOLE LAYOUT ELEVATION

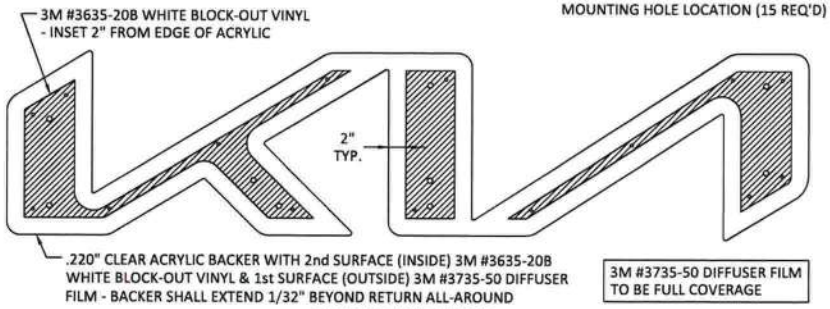

BLOCK-OUT VINYL LAYOUT

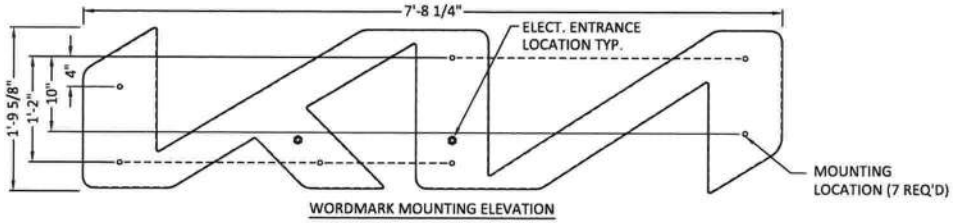

WORDMARK MOUNTING ELEVATION

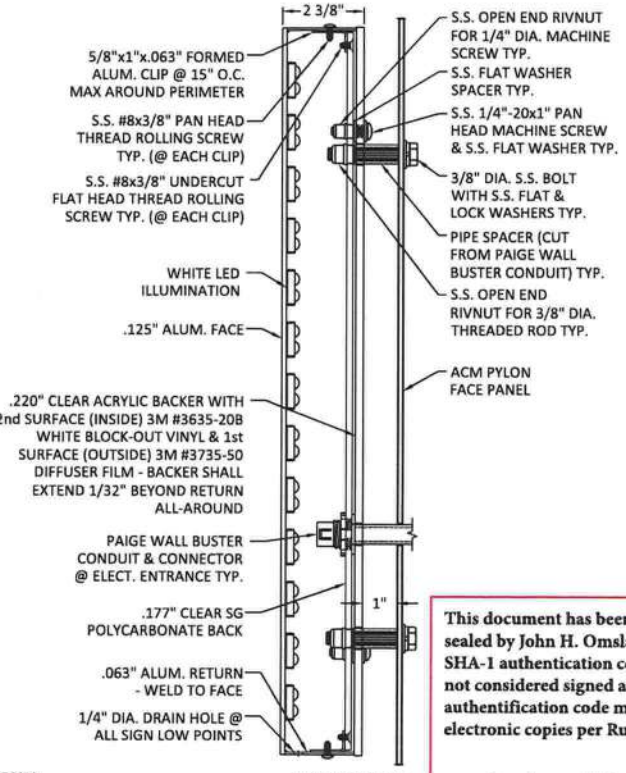

TYPICAL SECTION

This document has been electronically signed and sealed by John H. Omslaer, P.E. on date using a SHA-1 authentication code. Printed copies are not considered signed and sealed and the SHA-1 authentification code must be verified on any electronic copies per Rule 62-30.060, F.A.C.

John H Omslaer

Digitally signed by John H Omslaer
DN: c=US, st=Florida, l=Pompano Beach, o=Dynamic Engineering Solutions Inc, cn=John H Omslaer, email=des_inc@bellsouth.net
Date: 2022.08.11 07:23:19 -04'00'

DESIGNED IN COMPLIANCE 2020 FLORIDA BUILDING CODE, 7th EDITION SECTION 1620 AND APPENDIX H AND ASCE 7-16
V(ULT) WIND SPEED 140 MPH • EXPOSURE CLASSIFICATION = C • RISK CATEGORY = II
DESIGN PRESSURE 26.1 PSF

Dynamic Engineering Solutions, Inc.
John H. Omslaer, PE 52733, EB 26829
351 S. Cypress Road, Suite 303 • Pompano Beach, FL 33060

NAME	PATTSON SIGN GROUP INC
JOB NAME	ROUNTREE MOORE KIA
ADDRESS	2528 US HIGHWAY 90 WEST LAKE CITY, FL 32055
DESIGNER	DWG NO. B22726 / SALES REP. GARY / DATE 07/22/2022
S.E.	

APPROVAL

REVISIONS

This Design is the property of Mcneill Signs, Inc. and may not be reproduced without permission.

400 Ninth Street, Bunnell, FL 32110 Ph. 386-586-7100 Fax. 386-586-0073
Website - www.mcneillsigns.com Sales Dept. E-mail - sales@mcneillsigns.com

mcneill
McNeill Signs, Inc.
Serving Florida since 1956

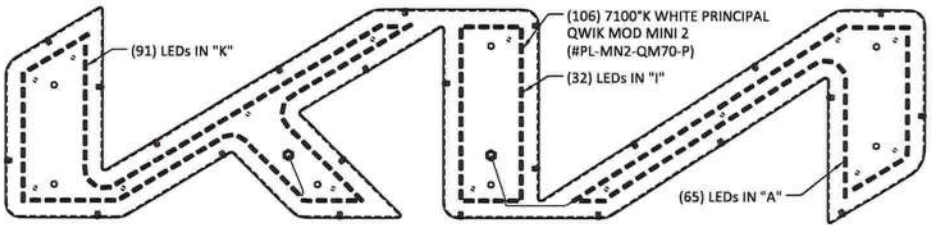

(188) LEDs IN "KIA" TO (1) POWER SUPPLY

WORDMARK LED LAYOUT

WORDMARK ELECTRICAL REQUIREMENTS - SINGLE WORDMARK -	
(2) WORDMARKS REQ'D PER MONUMENT:	
LEDs:	(88) 7100°K WHITE PRINCIPAL QWIK MOD MINI 2 #PL-MN2-QM70-P
POWER SUPPLY:	(2) 12V/60W PRINCIPAL LED #P-OH060-12-PL @ 1.10A
TOTAL LOAD:	2.20A @ 120VAC
CIRCUITS:	(1) 20 AMP REQUIRED

ACCENT LENS ELECTRICAL REQUIREMENTS - SINGLE LENS -	
(2) LENSES REQ'D PER MONUMENT:	
LEDs:	(133) 7100°K WHITE PRINCIPAL QWIK MOD 2 #PL-QM2-TW150-P
POWER SUPPLY:	(2) 12V/60W PRINCIPAL LED #P-OH060-12-PL @ 1.10A
TOTAL LOAD:	2.20A @ 120VAC
CIRCUITS:	(1) 20 AMP REQUIRED

TOTAL MONUMENT ELECTRICAL REQUIREMENTS:	
LEDs:	(266) 7100°K WHITE PRINCIPAL QWIK MOD 2 #PL-QM2-TW150-P (376) 7100°K WHITE PRINCIPAL QWIK MOD MINI 2 #PL-MN2-QM70-P
POWER SUPPLY:	(8) 12V/60W PRINCIPAL LED #P-OH060-12-PL @ 1.10A
TOTAL LOAD:	8.80A @ 120VAC
CIRCUITS:	(1) 20 AMP REQUIRED

SIGN MANUFACTURED AND ALL COMPONENTS TO COMPLY WITH U.L. AND NEC 2017 REQUIREMENTS

SIGN E01

ELECTRICAL

Sign to be listed as per NEC 600.3.
Sign to have disconnect switch as per NEC 600.6 located within sight of sign. The control switch amps rating not less than twice the ampere rating of transformers as per NEC 404.14 and 600.6 (B).

600.6 (a)(2)
No disconnect where the disconnecting means is out of the line of sight from any section that is able to be Energized, the disconnecting means shall be lockable in accordance with 110.25

Branch circuits not to exceed 20 amperes as per NEC 600.5 (A) & (B).

Grounding and bonding as per NEC 600.7 (A) and (B) including article 250.
Equipment grounding to be grounded by connection as per NEC 600.7 (a) (1) and 250.118.
Grounding conductor sizing as per NEC 600.7 and 250.122.
Equipment bonding connection to be in accordance with 250.8.

Sign to be marked as per NEC 600.4 (A). Power supplies marked as per NEC 600.23 (A)-(F).
Section signs to be marked and installation instructions provided as per NEC 600.4 (C),(D) and (E).

Sufficient number of 1/4" drain holes as per NEC 600.9 (D).

Ballast, transformers, electrical power supplies, and class2 power sources as per NEC 600.21 within the sign as per NEC 600.22. Grounding as per NEC 600.7 and article 250.

Class 2 power sources as per NEC 600.24 (A)-(D).

Field Installed secondary wiring to e installed as per NEC 600.12 (A), (B) and (C).

Attic/soffit sign equipment locations requiring at least one (1) lighting outlet containing a disconnect near the sign equipment as per NEC 600.21 (D) and (E).

Power supplies as per NEC 600.21, 600.23 and 600.32.
Primary conductors strain relief required as UL 48.

All signs circuits to be controlled by a photo cell or time clock as per FBC 13-415.
AB.1.4 and energy conservation code C 405.6.2 exception 2.

Sign to be manufacture and install in accordance with FBC 2020 chapter 16 including sections 3107 and 2612.

THE MANUFACTURER REQUIRES THAT ALL COMPONENTS BE LISTED BY A RECOGNIZED TESTING SERVICE

DESIGNED IN COMPLIANCE 2020 FLORIDA BUILDING CODE, 7th EDITION SECTION 1620 AND APPENDIX H AND ASCE 7-16
V(ULT) WIND SPEED 140 MPH • EXPOSURE CLASSIFICATION = C • RISK CATEGORY = II
DESIGN PRESSURE 26.1 PSF

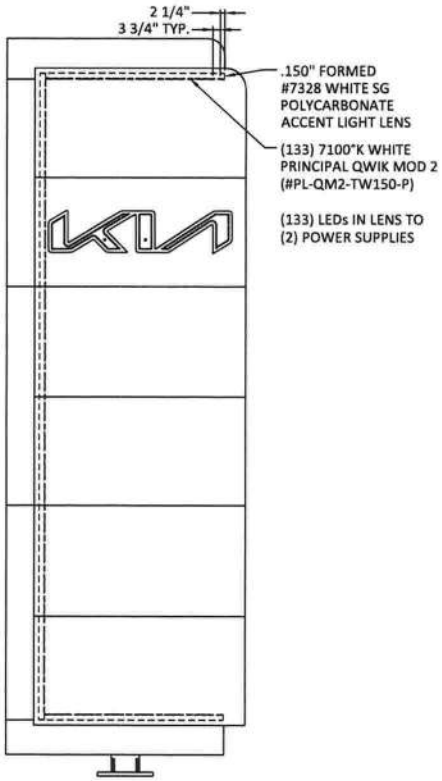

ACCENT LENS LED LAYOUT

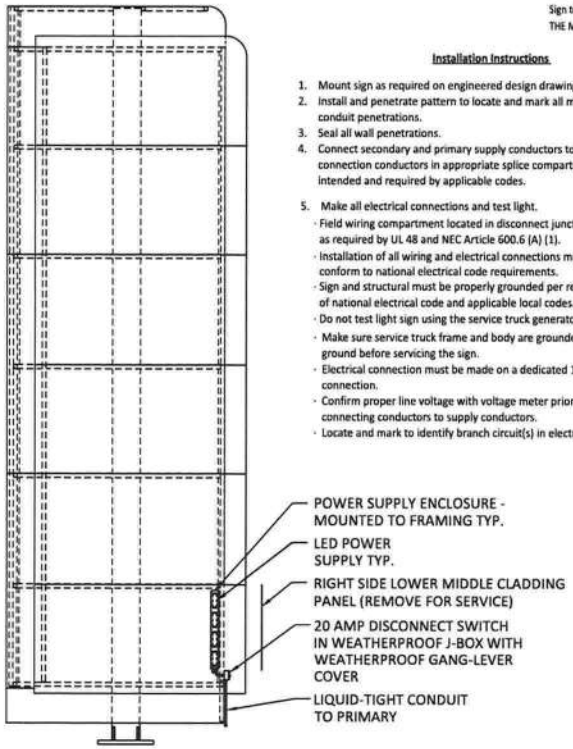

ELECTRICAL SERVICE ELEVATION

Installation Instructions

1. Mount sign as required on engineered design drawings.
2. Install and penetrate pattern to locate and mark all mounting and electrical conduit penetrations.
3. Seal all wall penetrations.
4. Connect secondary and primary supply conductors to provided splice connection conductors in appropriate splice compartment enclosure as intended and required by applicable codes.
5. Make all electrical connections and test light.
   - Field wiring compartment located in disconnect junction box as required by UL 48 and NEC Article 600.6 (A) (1).
   - Installation of all wiring and electrical connections must conform to national electrical code requirements.
   - Sign and structural must be properly grounded per requirements of national electrical code and applicable local codes.
   - Do not test light sign using the service truck generator.
   - Make sure service truck frame and body are grounded to earth ground before servicing the sign.
   - Electrical connection must be made on a dedicated 120v connection.
   - Confirm proper line voltage with voltage meter prior to connecting conductors to supply conductors.
   - Locate and mark to identify branch circuit(s) in electrical panel.

This sign is intended to be installed in accordance with the requirements of UL 48, NEC Article 600 and/or other applicable local codes. Sign products are only suitable for use when connected to a power source that does not comply with Class 2 voltage and energy limited supplies.

Disconnect Switch Statement

The location of the disconnect switch after installation shall comply with Article 600.6(A) (1) of the National Electrical Code.

FOR ALL OUTDOOR LOCATIONS, ALL RACEWAYS FITTINGS AND BOXES ARE WEATHERPROOF AND INCLUDE DRAIN HOLES
NOTE: ALL ELECTRICAL COMPONENTS CONFORM TO UL 48 STANDARDS FOR SAFETY

6. Clean product of any fingerprints and installation debris.
7. Clean site of all installation debris.
8. Sign permit tags, which shall include the address of the property on which the sign is located, permit number, date installed, and the name of the installation company or person, shall be affixed to each new sign permitted pursuant of this article. Sign permit tags should be of a durable weatherproof material and affixed in a location readily visible on the sign and shall be supplied by the the installation company or person.
9. Apply sign wet, damp or dry determination tags

This document has been electronically signed and sealed by John H. Omslaer, P.E. on date using a SHA-1 authentication code. Printed copies are not considered signed and sealed and the SHA-1 authentification code must be verified on any electronic copies per Rule 62-30.060, F.A.C.

John H Omslaer

Digitally signed by John H Omslaer
DN: c=US, st=Florida, l=Pompano Beach, o=Dynamic Engineering Solutions Inc, cn=John H Omslaer, email=des_inc@bellsouth.net
Date: 2022.08.11 07:24:50 -04'00'

Dynamic Engineering Solutions, Inc.
John H. Omslaer, PE 52733, EB 26829
351 S. Cypress Road, Suite 303 • Pompano Beach, FL 33060

NAME	PATTISON SIGN GROUP INC
JOB NAME	ROUNTREE MOORE KIA
ADDRESS	2528 US HIGHWAY 90 WEST LAKE CITY, FL 32055
DESIGNER	DWG NO. B22727 / SALES REP. GARY / DATE 07/22/2022
S.E.	

APPROVAL

REVISIONS

This Design is the property of Mcneill Signs, Inc. and may not be reproduced without permission.

mcneill
McNeill Signs, Inc.
Serving Florida since 1956
400 Ninth Street, Bunnell, FL 32110 Ph. 386-586-7100 Fax. 386-586-0073
Website - www.mcneillsigns.com Sales Dept. E-mail - sales@mcneillsigns.com