Lance Pound

PRODUCT APPROVAL SPECIFICATION SHEET

Location:

Project Name: Lance Pound

As required by Florida Statute 553.842 and Florida Administrative Code 9B-72, please provide the information and t product approval number(s) on the building components listed below if they will be utilized on the construction proje which you are applying for a building permit on or after April 1, 2004. We recommend you contact your local produ supplier should you not know the product approval number for any of the applicable listed products. More informati about statewide product approval can be obtained at www.floridabuilding.org

Category/Subcategory	Manufacturer	Product Description	Approval Numb
A. EXTERIOR DOORS			
1. Swinging	Maxtair	entry door	FL 1311
2. Sliding			
3. Sectional			
4. Roll up			
5. Automatic			
6. Other			
B. WINDOWS			
1. Single hung	Danvid	Single hung windows	FL 1369
2. Horizontal Slider			
3. Casement			
4. Double Hung			
5. Fixed			
6. Awning			
7. Pass -through			
8. Projected			
9. Mullion			
10. Wind Breaker			
11 Dual Action			
12. Other			
C. PANEL WALL			
1. Siding	James Hardie	Hardiboard Siding	FL 889-R
2. Soffits			
3. EIFS			
4. Storefronts			
5. Curtain walls			
6. Wall louver			
7. Glass block			
8. Membrane			
9. Greenhouse			
10. Other			
D. ROOFING PRODUCTS			
1. Asphalt Shingles	Tamko	30-year shingles asphalt	FL 673
2. Underlayments			
3. Roofing Fasteners			
4. Non-structural Metal Rf			
5. Built-Up Roofing			
6. Modified Bitumen			
7. Single Ply Roofing Sys			
8. Roofing Tiles			
9. Roofing Insulation			
10. Waterproofing			
11. Wood shingles /shakes			
12. Roofing Slate			

COLUMBIA COUNTY BUILDING DEPARTMENT
Received for FILE COPY
Code Compliance
PLANS EXAMINER

Category/Subcategory (cont.)	Manufacturer	Product Description	Approval Number(s)
13. Liquid Applied Roof Sys			
14. Cements-Adhesives – Coatings			
15. Roof Tile Adhesive			
16. Spray Applied Polyurethane Roof			
17. Other			
E. SHUTTERS			
1. Accordion			
2. Bahama			
3. Storm Panels			
4. Colonial			
5. Roll-up			
6. Equipment			
7. Others			
F. SKYLIGHTS			
1. Skylight			
2. Other			
G. STRUCTURAL COMPONENTS			
1. Wood connector/anchor			
2. Truss plates			
3. Engineered lumber			
4. Railing			
5. Coolers-freezers			
6. Concrete Admixtures			
7. Material			
8. Insulation Forms			
9. Plastics			
10. Deck-Roof			
11. Wall			
12. Sheds			
13. Other			
H. NEW EXTERIOR ENVELOPE PRODUCTS			
1.			
2.			

The products listed below did not demonstrate product approval at plan review. I understand that at the time of inspection of these products, the following information must be available to the inspector on the jobsite; 1) copy of the product approval, 2) the performance characteristics which the product was tested and certified to comply with, 3) copy of the applicable manufacturers installation requirements.

I understand these products may have to be removed if approval cannot be demonstrated during inspect

Contractor or Contractor's Authorized Agent Signature

Print Name: Linda Roder

Date: 4-25-11

Location

Permit # (FOR STAFF USE ONLY)

Craftsman

42" Woodburning Fireplace

Vent Pipe Size	10"
Min. Pipe Clearance	1"
Min. System Height	14' 6"
- w/ Single Offset	14' 6"
- w/ Two Offsets	22' 0"
Max. Dist. Between Elbows	6' 0"
Max. System Height	50' 0"

COLUMBIA COUNTY BUILDING DEPARTMENT
Received for FILE COPY
Code Compliance
PLANS EXAMINER

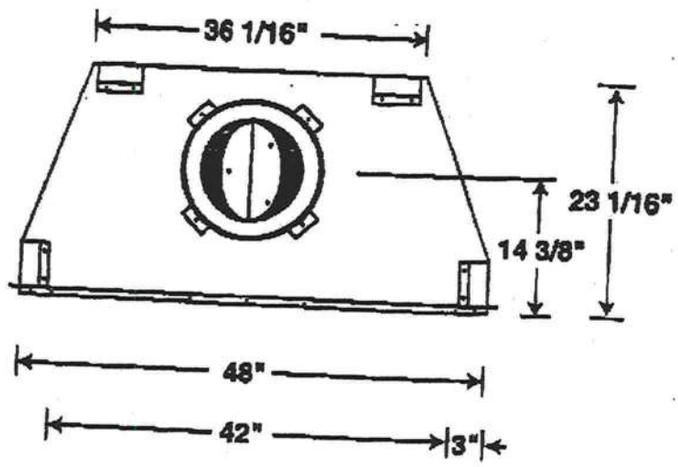

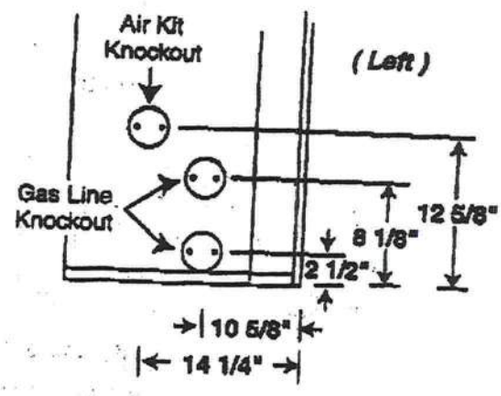

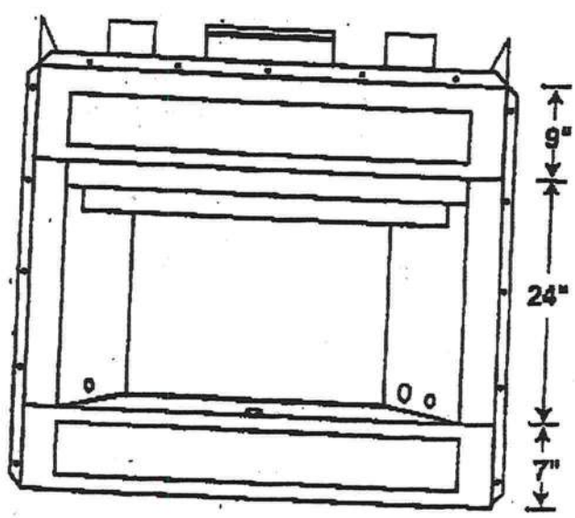

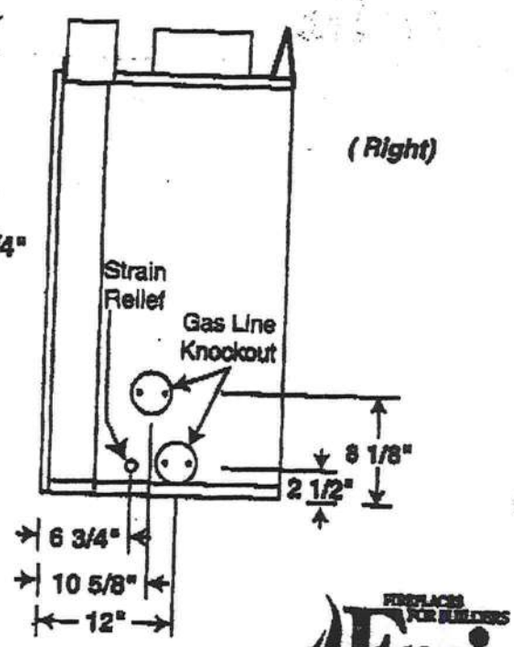

FIREPLACES FOR BUILDERS
Fmi

FORM 1100A-08

FLORIDA ENERGY EFFICIENCY CODE FOR BUILDING CONSTRUCTION

Florida Department of Community Affairs Residential Performance Method A

Project Name:	Lance Pound - Cottage	Builder Name:	N/A
Street:	SW Stillview Glen	Permit Office:	Columbia County
City, State, Zip:	, FL , 32024-	Permit Number:	
Owner:	Lance Pound	Jurisdiction:	
Design Location:	FL, Gainesville		

1. New construction or existing	New (From Plans)
2. Single family or multiple family	Single-family
3. Number of units, if multiple family	1
4. Number of Bedrooms	1
5. Is this a worst case?	No
6. Conditioned floor area (ft²)	386

7. Windows(105.3 sqft.)	Description	Area
a. U-Factor:	Dbl, U=0.30	105.25 ft²
SHGC:	SHGC=0.50	
b. U-Factor:	N/A	ft²
SHGC:		
c. U-Factor:	N/A	ft²
SHGC:		
d. U-Factor:	N/A	ft²
SHGC:		
e. U-Factor:	N/A	ft²
SHGC:		

8. Floor Types (386.0 sqft.)	Insulation	Area
a. Slab-On-Grade Edge Insulation	R=5.0	386.00 ft²
b. N/A	R=	ft²
c. N/A	R=	ft²

9. Wall Types (877.7 sqft.)	Insulation	Area
a. Frame - Wood, Exterior	R=19.0	877.67 ft²
b. N/A	R=	ft²
c. N/A	R=	ft²
d. N/A	R=	ft²

10. Ceiling Types (486.0 sqft.)	Insulation	Area
a. Under Attic (Vented)	R=30.0	486.00 ft²
b. N/A	R=	ft²
c. N/A	R=	ft²

11. Ducts
a. Sup: Attic Ret: Attic AH: Interior Sup. R= 6, 144.75 ft²

12. Cooling systems
a. Central Unit — Cap: 18.6 kBtu/hr, SEER: 16.6

13. Heating systems
a. Electric Heat Pump — Cap: 18.6 kBtu/hr, HSPF: 7.7

14. Hot water systems
a. Electric — Cap: 50 gallons, EF: 0.92

b. Conservation features
None

15. Credits — CF, CV, Pstat

Glass/Floor Area: 0.273

Total As-Built Modified Loads: 14.56
Total Baseline Loads: 17.17

PASS

I hereby certify that the plans and specifications covered by this calculation are in compliance with the Florida Energy Code.

PREPARED BY:
DATE: 3/24/11

I hereby certify that this building, as designed, is in compliance with the Florida Energy Code.

OWNER/AGENT: X
DATE:

Review of the plans and specifications covered by this calculation indicates compliance with the Florida Energy Code. Before construction is completed this building will be inspected for compliance with Section 553.908 Florida Statutes.

BUILDING OFFICIAL:
DATE:

GREAT SEAL OF THE STATE OF FLORIDA — IN GOD WE TRUST

COLUMBIA COUNTY BUILDING DEPARTMENT — Received for FILE COPY — Code Compliance — PLANS EXAMINER

PROJECT

Title:	Lance Pound - Cottage	Bedrooms:	1	Adress Type:	
Building Type:	FLAsBuilt	Conditioned Area:	386	Lot #	
Owner:	Lance Pound	Total Stories:	1	Block/SubDivision	
# of Units:	1	Worst Case:	No	PlatBook:	
Builder Name:	N/A	Rotate Angle:	0	Street:	SW Stillview Glen
Permit Office:	Columbia County	Cross Ventilation:	Yes	County:	Columbia
Jurisdiction:		Whole House Fan:	No	City, State, Zip:	, FL 32024-
Family Type:	Single-family				
New/Existing:	New (From Plans)				
Comment:					

CLIMATE

√	Design Location	TMY Site	IECC Zone	Design Temp 97.5 %	Design Temp 2.5 %	Int Design Temp Winter	Int Design Temp Summer	Heating Degree Days	Design Moisture	Daily Temp Range
____	FL, Gainesville	FL_GAINESVILLE_REGI	2	32	92	75	70	1305.5	51	Medium

FLOORS

√	#	Floor Type	Perimeter	R-Value	Area	Tile	Wood	Carpet
____	1	Slab-On-Grade Edge Insulatio	78.67 ft	5	386 ft²	0	0	1

ROOF

√	#	Type	Materials	Roof Area	Gable Area	Roof Color	Solar Absor.	Tested	Deck Insul.	Pitch
____	1	Gable or shed	Metal	687 ft²	244 ft²	Dark	0.96	No	0	45 deg

ATTIC

√	#	Type	Ventilation	Vent Ratio (1 in)	Area	RBS	IRCC
____	1	Partial cathedral cei	Vented	303	486 ft²	N	N

CEILING

√	#	Ceiling Type	R-Value	Area	Framing Frac	Truss Type
____	1	Under Attic (Vented)	30	486 ft²	0.11	Wood

WALLS

√	#	Ornt	Adjacent To	Wall Type	Cavity R-Value	Area	Sheathing R-Value	Framing Fraction	Solar Absor.
____	1	E	Exterior	Frame - Wood	19	266 ft²		0.23	0.75
____	2	N	Exterior	Frame - Wood	19	172.8333		0.23	0.75
____	3	S	Exterior	Frame - Wood	19	172.8333		0.23	0.75
____	4	W	Exterior	Frame - Wood	19	266 ft²		0.23	0.75

DOORS

√	#	Ornt	Door Type	Storms	U-Value	Area
____	1	W	Insulated	None	0.460000	20 ft²
____	2	S	Insulated	None	0.460000	20 ft²

WINDOWS

Orientation shown is the entered, asBuilt orientation.

√	#	Ornt	Frame	Panes	NFRC	U-Factor	SHGC	Storms	Area	Overhang Depth	Overhang Separation	Int Shade	Screening
____	1	W	Metal	Low-E Double	Yes	0.3	0.5	N	35 ft²	1 ft 6 in	8 ft 0 in	HERS 2006	None
____	2	W	Metal	Low-E Double	Yes	0.3	0.5	N	3 ft²	1 ft 6 in	8 ft 0 in	HERS 2006	None
____	3	S	Metal	Low-E Double	Yes	0.3	0.5	N	6 ft²	1 ft 6 in	1.5 ft 0 in	HERS 2006	None
____	4	N	Metal	Low-E Double	Yes	0.3	0.5	N	52.5 ft²	1 ft 6 in	1.5 ft 0 in	HERS 2006	None
____	5	N	Metal	Low-E Double	Yes	0.3	0.5	N	8.75 ft²	1 ft 6 in	1.5 ft 0 in	HERS 2006	None

INFILTRATION & VENTING

√	Method	SLA	CFM 50	ACH 50	ELA	EqLA	Forced Ventilation Supply CFM	Forced Ventilation Exhaust CFM	Run Time Fraction	Fan Watts
____	Default	0.00036	364	4.72	20.0	37.6	0 cfm	0 cfm	0	0

COOLING SYSTEM

√	#	System Type	Subtype	Efficiency	Capacity	Air Flow	SHR	Ducts
____	1	Central Unit	None	SEER: 16.5	18.6 kBtu/hr	cfm	0.75	sys#1

HEATING SYSTEM

√	#	System Type	Subtype	Efficiency	Capacity	Ducts
____	1	Electric Heat Pump	None	HSPF: 7.7	18.6 kBtu/hr	sys#1

HOT WATER SYSTEM

√	#	System Type	EF	Cap	Use	SetPnt	Conservation
____	1	Electric	0.92	50 gal	40 gal	120 deg	None

SOLAR HOT WATER SYSTEM

√	FSEC Cert #	Company Name	System Model #	Collector Model #	Collector Area	Storage Volume	FEF
____	None	None			ft²		

DUCTS

√	#	Supply Location	Supply R-Value	Supply Area	Return Location	Return Area	Leakage Type	Air Handler	CFM 25	Percent Leakage	QN	RLF
____	1	Attic	6	144.75	Attic	28.95 ft	Default Leakage	Interior	(Default)	(Default) %		

TEMPERATURES

Programable Thermostat: Y Ceiling Fans: N

Cooling	[X] Jan	[X] Feb	[X] Mar	[X] Apr	[X] May	[X] Jun	[X] Jul	[X] Aug	[X] Sep	[X] Oct	[X] Nov	[X] Dec
Heating	[X] Jan	[X] Feb	[X] Mar	[X] Apr	[X] May	[X] Jun	[X] Jul	[X] Aug	[X] Sep	[X] Oct	[X] Nov	[X] Dec
Venting	[X] Jan	[X] Feb	[X] Mar	[X] Apr	[X] May	[X] Jun	[X] Jul	[X] Aug	[X] Sep	[X] Oct	[X] Nov	[X] Dec

Thermostat Schedule: HERS 2006 Reference

Schedule Type		Hours 1	2	3	4	5	6	7	8	9	10	11	12
Cooling (WD)	AM	78	78	78	78	78	78	78	78	80	80	80	80
	PM	80	80	78	78	78	78	78	78	78	78	78	78
Cooling (WEH)	AM	78	78	78	78	78	78	78	78	78	78	78	78
	PM	78	78	78	78	78	78	78	78	78	78	78	78
Heating (WD)	AM	66	66	66	66	66	68	68	68	68	68	68	68
	PM	68	68	68	68	68	68	68	68	68	68	66	66
Heating (WEH)	AM	66	66	66	66	66	68	68	68	68	68	68	68
	PM	68	68	68	68	68	68	68	68	68	68	66	66

FORM 1100A-08

Code Compliance Checklist

Residential Whole Building Performance Method A - Details

ADDRESS: SW Stillview Glen , FL, 32024-	PERMIT #:

INFILTRATION REDUCTION COMPLIANCE CHECKLIST

COMPONENTS	SECTION	REQUIREMENTS FOR EACH PRACTICE	CHECK
Exterior Windows & Doors	N1106.AB.1.1	Maximum: .3 cfm/sq.ft. window area; .5 cfm/sq.ft. door area.	
Exterior & Adjacent Walls	N1106.AB.1.2	Caulk, gasket, weatherstrip or seal between: windows/doors & frames, surrounding wall; foundation & wall sole or sill plate; joints between exterior wall panels at corners; utility penetrations; between wall panels & top/bottom plates; between walls and floor. EXCEPTION: Frame walls where a continuous infiltration barrier is installed that extends from, and is sealed to, the foundation to the top plate.	
Floors	N1106.AB.1.2	Penetrations/openings > 1/8" sealed unless backed by truss or joint members. EXCEPTION: Frame floors where a continuous infiltration barrier is installed that is sealed to the perimeter, penetrations and seams.	
Ceilings	N1106.AB.1.2	Between walls & ceilings; penetrations of ceiling plane to top floor; around shafts, chases, soffits, chimneys, cabinets sealed to continuous air barrier; gaps in gyp board & top plate; attic access. EXCEPTION: Frame ceilings where a continuous infiltration barrier is installed that is sealed at the perimeter, at penetrations and seams.	
Recessed Lighting Fixtures	N1106.AB.1.2	Type IC rated with no penetrations, sealed; or Type IC or non-IC rated, installed inside a sealed box with 1/2" clearance & 3" from insulation; or Type IC with < 2.0 cfm from conditioned space, tested.	
Multi-story Houses	N1106.AB.1.2	Air barrier on perimeter of floor cavity between floors.	
Additional Infiltration reqts	N1106.AB.1.3	Exhaust fans vented to outdoors, dampers; combustion space heaters comply with NFPA, have combustion air.	

OTHER PRESCRIPTIVE MEASURES (must be met or exceeded by all residences.)

COMPONENTS	SECTION	REQUIREMENTS	CHECK
Water Heaters	N1112.AB.3	Comply with efficiency requirements in Table N1112.ABC.3 Switch or clearly marked circuit breaker (electric) or cutoff (gas) must be provided. External or built-in heat trap required.	
Swimming Pools & Spas	N1112.AB.2.3	Spas & heated pools must have covers (except solar heated). Non-commercial pools must have a pump timer. Gas spa & pool heaters must have a minimum thermal efficiency of 78%. Heat pump pool heaters shall have a minimum COP of 4.0.	
Shower heads	N1112.AB.2.4	Water flow must be restricted to no more than 2.5 gallons per minute at 80 PSIG.	
Air Distribution Systems	N1110.AB	All ducts, fittings, mechanical equipment and plenum chambers shall be mechanically attached, sealed, insulated and installed in accordance with the criteria of Section N1110.AB. Ducts in unconditioned attics: R-6 min. insulation.	
HVAC Controls	N1107.AB.2	Separate readily accessible manual or automatic thermostat for each system.	
Insulation	N1104.AB.1 N1102.B.1.1	Ceilings-Min. R-19. Common walls-frame R-11 or CBS R-3 both sides. Common ceiling & floors R-11.	

ENERGY PERFORMANCE LEVEL (EPL) DISPLAY CARD

ESTIMATED ENERGY PERFORMANCE INDEX* = 85

The lower the EnergyPerformance Index, the more efficient the home.

SW Stillview Glen, , FL, 32024-

1. New construction or existing	New (From Plans)
2. Single family or multiple family	Single-family
3. Number of units, if multiple family	1
4. Number of Bedrooms	1
5. Is this a worst case?	No
6. Conditioned floor area (ft²)	386

7. Windows**	Description	Area
a. U-Factor:	Dbl, U=0.30	105.25 ft²
SHGC:	SHGC=0.50	
b. U-Factor:	N/A	ft²
SHGC:		
c. U-Factor:	N/A	ft²
SHGC:		
d. U-Factor:	N/A	ft²
SHGC:		
e. U-Factor:	N/A	ft²
SHGC:		

8. Floor Types	Insulation	Area
a. Slab-On-Grade Edge Insulation	R=5.0	386.00 ft²
b. N/A	R=	ft²
c. N/A	R=	ft²

9. Wall Types	Insulation	Area
a. Frame - Wood, Exterior	R=19.0	877.67 ft²
b. N/A	R=	ft²
c. N/A	R=	ft²
d. N/A	R=	ft²

10. Ceiling Types	Insulation	Area
a. Under Attic (Vented)	R=30.0	486.00 ft²
b. N/A	R=	ft²
c. N/A	R=	ft²

11. Ducts
a. Sup: Attic Ret: Attic AH: Interior Sup. R= 6, 144.75 ft²

12. Cooling systems
a. Central Unit — Cap: 18.6 kBtu/hr SEER: 16.5

13. Heating systems
a. Electric Heat Pump — Cap: 18.6 kBtu/hr HSPF: 7.7

14. Hot water systems
a. Electric — Cap: 50 gallons EF: 0.92

b. Conservation features
None

15. Credits — CF, CV, Pstat

I certify that this home has complied with the Florida Energy Efficiency Code for Building Construction through the above energy saving features which will be installed (or exceeded) in this home before final inspection. Otherwise, a new EPL Display Card will be completed based on installed Code compliant features.

Builder Signature: _____ Date: _____

Address of New Home: _____ City/FL Zip: _____

*Note: The home's estimated Energy Performance Index is only available through the EnergyGauge USA - FlaRes2008 computer program. This is not a Building Energy Rating. If your Index is below 100, your home may qualify for incentives if you obtain a Florida Energy Gauge Rating. Contact the Energy Gauge Hotline at (321) 638-1492 or see the Energy Gauge web site at energygauge.com for information and a list of certified Raters. For information about Florida's Energy Efficiency Code for Building Construction, contact the Department of Community Affairs at (850) 487-1824.

**Label required by Section 13-104.4.5 of the Florida Building Code, Building, or Section B2.1.1 of Appendix G of the Florida Building Code, Residential, if not DEFAULT.

Residential System Sizing Calculation

Summary

Lance Pound
SW Stillview Glen
, FL 32024-

Project Title:
Lance Pound - Cottage

Code Only
Professional Version
Climate: North

3/24/2011

Location for weather data: Gainesville - Defaults: Latitude(29) Altitude(152 ft.) Temp Range(M)
Humidity data: Interior RH (50%) Outdoor wet bulb (77F) Humidity difference(54gr.)

Winter design temperature	33	F	Summer design temperature	92	F
Winter setpoint	70	F	Summer setpoint	75	F
Winter temperature difference	37	F	Summer temperature difference	17	F
Total heating load calculation	**9857**	**Btuh**	**Total cooling load calculation**	**10008**	**Btuh**
Submitted heating capacity	% of calc	Btuh	Submitted cooling capacity	% of calc	Btuh
Total (Electric Heat Pump)	188.7	18600	Sensible (SHR = 0.75)	186.8	13950
Heat Pump + Auxiliary(0.0kW)	188.7	18600	Latent	183.1	4650
			Total (Electric Heat Pump)	185.9	18600

WINTER CALCULATIONS

Winter Heating Load (for 386 sqft)

Load component			Load	
Window total	105	sqft	1168	Btuh
Wall total	886	sqft	2532	Btuh
Door total	40	sqft	518	Btuh
Ceiling total	486	sqft	573	Btuh
Floor total	79	sqft	1287	Btuh
Infiltration	62	cfm	2502	Btuh
Duct loss			1277	Btuh
Subtotal			**9857**	**Btuh**
Ventilation	0	cfm	0	Btuh
TOTAL HEAT LOSS			**9857**	**Btuh**

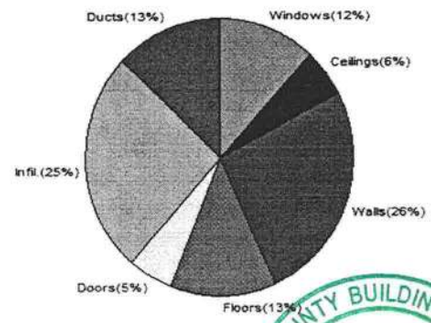

COLUMBIA COUNTY BUILDING DEPARTMENT
Received for
FILE COPY
Code Compliance
PLANS EXAMINER

SUMMER CALCULATIONS

Summer Cooling Load (for 386 sqft)

Load component			Load	
Window total	105	sqft	2028	Btuh
Wall total	886	sqft	1328	Btuh
Door total	40	sqft	392	Btuh
Ceiling total	486	sqft	263	Btuh
Floor total			0	Btuh
Infiltration	54	cfm	1006	Btuh
Internal gain			1660	Btuh
Duct gain			791	Btuh
Sens. Ventilation	0	cfm	0	Btuh
Total sensible gain			**7468**	**Btuh**
Latent gain(ducts)			165	Btuh
Latent gain(infiltration)			1975	Btuh
Latent gain(ventilation)			0	Btuh
Latent gain(internal/occupants/other)			400	Btuh
Total latent gain			**2540**	**Btuh**
TOTAL HEAT GAIN			**10008**	**Btuh**

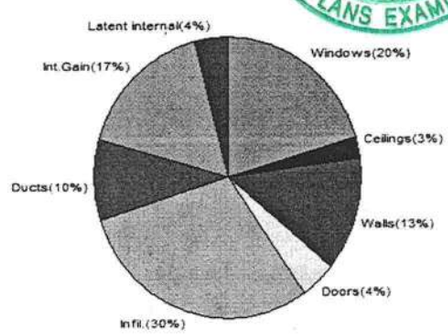

Version 8
For Florida residences only

EnergyGauge® System Sizing
PREPARED BY: _____
DATE: 3/24/11

EnergyGauge® FLRCPB v4.5.2

System Sizing Calculations - Winter

Residential Load - Whole House Component Details

Lance Pound
SW Stillview Glen
, FL 32024-

Project Title:
Lance Pound - Cottage

Code Only
Professional Version
Climate: North

Reference City: Gainesville (Defaults) Winter Temperature Difference: 37.0 F

3/24/2011

Component Loads for Whole House

Window	Panes/SHGC/Frame/U	Orientation	Area(sqft) X	HTM=	Load
1	2, Clear, Metal, 0.30	W	35.0	11.1	388 Btuh
2	2, Clear, Metal, 0.30	W	3.0	11.1	33 Btuh
3	2, Clear, Metal, 0.30	S	6.0	11.1	67 Btuh
4	2, Clear, Metal, 0.30	N	52.5	11.1	583 Btuh
5	2, Clear, Metal, 0.30	N	8.8	11.1	97 Btuh
	Window Total		105(sqft)		1168 Btuh
Walls	Type	R-Value	Area X	HTM=	Load
1	Frame - Wood - Ext(0.08)	19.0	886	2.9	2532 Btuh
	Wall Total		886		2532 Btuh
Doors	Type		Area X	HTM=	Load
1	Insulated - Exterior		40	12.9	518 Btuh
	Door Total		40		518Btuh
Ceilings	Type/Color/Surface	R-Value	Area X	HTM=	Load
1	Vented Attic/W/Meta	30.0	486	1.2	573 Btuh
	Ceiling Total		486		573Btuh
Floors	Type	R-Value	Size X	HTM=	Load
1	Slab On Grade	5	78.7 ft(p)	16.4	1287 Btuh
	Floor Total		79		1287 Btuh
			Envelope Subtotal:		6078 Btuh
Infiltration	Type	ACH X	Volume(cuft)	walls(sqft) CFM=	
	Natural	0.80	4632	886 61.8	2502 Btuh
Ductload				(DLM of 0.149)	1277 Btuh
All Zones			**Sensible Subtotal All Zones**		**9857 Btuh**

WHOLE HOUSE TOTALS

	Subtotal Sensible	9857 Btuh
	Ventilation Sensible	0 Btuh
	Total Btuh Loss	9857 Btuh

Manual J Winter Calculations

Residential Load - Component Details (continued)

Lance Pound
SW Stillview Glen
, FL 32024-

Project Title:
Lance Pound - Cottage

Code Only
Professional Version
Climate: North

3/24/2011

EQUIPMENT

1. Electric Heat Pump	#	18600 Btuh

Key: Window types (SHGC - Shading coefficient of glass as SHGC numerical value or as clear or tint)
(Frame types - metal, wood or insulated metal)
(U - Window U-Factor or 'DEF' for default)
(HTM - ManualJ Heat Transfer Multiplier)
Key: Floor size (perimeter(p) for slab-on-grade or area for all other floor types)

Version 8
For Florida residences only

System Sizing Calculations - Winter

Residential Load - Room by Room Component Details

Lance Pound
SW Stillview Glen
, FL 32024-

Project Title:
Lance Pound - Cottage

Code Only
Professional Version
Climate: North

Reference City: Gainesville (Defaults) Winter Temperature Difference: 37.0 F

3/24/2011

Component Loads for Zone #1: Main

Window	Panes/SHGC/Frame/U	Orientation	Area(sqft) X	HTM=	Load
1	2, Clear, Metal, 0.30	W	35.0	11.1	388 Btuh
2	2, Clear, Metal, 0.30	W	3.0	11.1	33 Btuh
3	2, Clear, Metal, 0.30	S	6.0	11.1	67 Btuh
4	2, Clear, Metal, 0.30	N	52.5	11.1	583 Btuh
5	2, Clear, Metal, 0.30	N	8.8	11.1	97 Btuh
	Window Total		105(sqft)		1168 Btuh
Walls	Type	R-Value	Area X	HTM=	Load
1	Frame - Wood - Ext(0.08)	19.0	886	2.9	2532 Btuh
	Wall Total		886		2532 Btuh
Doors	Type		Area X	HTM=	Load
1	Insulated - Exterior		40	12.9	518 Btuh
	Door Total		40		518Btuh
Ceilings	Type/Color/Surface	R-Value	Area X	HTM=	Load
1	Vented Attic/W/Meta	30.0	486	1.2	573 Btuh
	Ceiling Total		486		573Btuh
Floors	Type	R-Value	Size X	HTM=	Load
1	Slab On Grade	5	78.7 ft(p)	16.4	1287 Btuh
	Floor Total		79		1287 Btuh
			Zone Envelope Subtotal:		6078 Btuh
Infiltration	Type	ACH X	Volume(cuft)	walls(sqft) CFM=	
	Natural	0.80	4632	886 61.8	2502 Btuh
Ductload	Pro. leak free, Supply(R6.0-Attic), Return(R6.0-Attic)			(DLM of 0.149)	1277 Btuh
Zone #1			**Sensible Zone Subtotal**		**9857 Btuh**

WHOLE HOUSE TOTALS

	Subtotal Sensible	9857 Btuh
	Ventilation Sensible	0 Btuh
	Total Btuh Loss	9857 Btuh

Manual J Winter Calculations

Residential Load - Component Details (continued)

Lance Pound
SW Stillview Glen
, FL 32024-

Project Title:
Lance Pound - Cottage

Code Only
Professional Version
Climate: North

3/24/2011

EQUIPMENT

1. Electric Heat Pump	#	18600 Btuh

Key: Window types (SHGC - Shading coefficient of glass as SHGC numerical value or as clear or tint)
(Frame types - metal, wood or insulated metal)
(U - Window U-Factor or 'DEF' for default)
(HTM - ManualJ Heat Transfer Multiplier)
Key: Floor size (perimeter(p) for slab-on-grade or area for all other floor types)

Version 8
For Florida residences only

System Sizing Calculations - Summer

Residential Load - Whole House Component Details

Lance Pound
SW Stillview Glen
, FL 32024-

Project Title:
Lance Pound - Cottage

Code Only
Professional Version
Climate: North

Reference City: Gainesville (Defaults) Summer Temperature Difference: 17.0 F 3/24/2011

Component Loads for Whole House

Window	Type* Pn/SHGC/U/InSh/ExSh/IS	Ornt	Overhang Len	Overhang Hgt	Window Area(sqft) Gross	Shaded	Unshaded	HTM Shaded	HTM Unshaded	Load
1	2, Clear, 0.30, None,0.00,N	W	8ft.	1.5ft	35.0	35.0	0.0	19	19	675 Btuh
2	2, Clear, 0.30, None,0.00,N	W	8ft.	1.5ft	3.0	3.0	0.0	19	19	58 Btuh
3	2, Clear, 0.30, None,0.00,N	S	1.5ft	1.5ft	6.0	6.0	0.0	19	19	116 Btuh
4	2, Clear, 0.30, None,0.00,N	N	1.5ft	1.5ft	52.5	0.0	52.5	19	19	1012 Btuh
5	2, Clear, 0.30, None,0.00,N	N	1.5ft	1.5ft	8.8	0.0	8.8	19	19	169 Btuh
	Window Total		-		105 (sqft)					2028 Btuh

Walls	Type	R-Value/U-Value	Area(sqft)	HTM	Load
1	Frame - Wood - Ext	19.0/0.08	885.7	1.5	1328 Btuh
	Wall Total		886 (sqft)		1328 Btuh

Doors	Type	Area (sqft)	HTM	Load
1	Insulated - Exterior	40.0	9.8	392 Btuh
	Door Total	40 (sqft)		392 Btuh

Ceilings	Type/Color/Surface	R-Value	Area(sqft)	HTM	Load
1	Vented Attic/White/Metal	30.0	486.0	0.5	263 Btuh
	Ceiling Total		486 (sqft)		263 Btuh

Floors	Type	R-Value	Size	HTM	Load
1	Slab On Grade	5.0	79 (ft(p))	0.0	0 Btuh
	Floor Total		78.7 (sqft)		0 Btuh

				Envelope Subtotal:	4011 Btuh

Infiltration	Type	ACH	Volume(cuft)	wall area(sqft)	CFM=	Load
	SensibleNatural	0.70	4632	886	61.8	1006 Btuh

Internal gain	Occupants		Btuh/occupant		Appliance	Load
	2	X	230	+	1200	1660 Btuh

	Sensible Envelope Load:	6677 Btuh
Duct load	(DGM of 0.118)	791 Btuh
	Sensible Load All Zones	**7468 Btuh**

Manual J Summer Calculations

Residential Load - Component Details (continued)

Lance Pound
SW Stillview Glen
, FL 32024-

Project Title:
Lance Pound - Cottage

Code Only
Professional Version
Climate: North

3/24/2011

WHOLE HOUSE TOTALS

Whole House Totals for Cooling	**Sensible Envelope Load All Zones**	**6677**	**Btuh**
	Sensible Duct Load	791	Btuh
	Total Sensible Zone Loads	**7468**	**Btuh**
	Sensible ventilation	0	Btuh
	Blower	0	Btuh
	Total sensible gain	**7468**	**Btuh**
	Latent infiltration gain (for 54 gr. humidity difference)	1975	Btuh
	Latent ventilation gain	0	Btuh
	Latent duct gain	165	Btuh
	Latent occupant gain (2 people @ 200 Btuh per person)	400	Btuh
	Latent other gain	0	Btuh
	Latent total gain	**2540**	**Btuh**
	TOTAL GAIN	**10008**	**Btuh**

EQUIPMENT

1. Central Unit	#	18600 Btuh

*Key: Window types (Pn - Number of panes of glass)
(SHGC - Shading coefficient of glass as SHGC numerical value or as clear or tint)
(U - Window U-Factor or 'DEF' for default)
(InSh - Interior shading device: none(N), Blinds(B), Draperies(D) or Roller Shades(R))
(ExSh - Exterior shading device: none(N) or numerical value)
(BS - Insect screen: none(N), Full(F) or Half(H))
(Ornt - compass orientation)

Version 8
For Florida residences only

System Sizing Calculations - Summer

Residential Load - Room by Room Component Details

Lance Pound
SW Stillview Glen
, FL 32024-

Project Title:
Lance Pound - Cottage

Code Only
Professional Version
Climate: North

Reference City: Gainesville (Defaults) Summer Temperature Difference: 17.0 F 3/24/2011

Component Loads for Zone #1: Main

Window	Type* Pn/SHGC/U/InSh/ExSh/IS	Ornt	Overhang Len	Overhang Hgt	Window Area(sqft) Gross	Shaded	Unshaded	HTM Shaded	HTM Unshaded	Load
1	2, Clear, 0.30, None,0.00,N	W	8ft.	1.5ft	35.0	35.0	0.0	19	19	675 Btuh
2	2, Clear, 0.30, None,0.00,N	W	8ft.	1.5ft	3.0	3.0	0.0	19	19	58 Btuh
3	2, Clear, 0.30, None,0.00,N	S	1.5ft	1.5ft	6.0	6.0	0.0	19	19	116 Btuh
4	2, Clear, 0.30, None,0.00,N	N	1.5ft	1.5ft	52.5	0.0	52.5	19	19	1012 Btuh
5	2, Clear, 0.30, None,0.00,N	N	1.5ft	1.5ft	8.8	0.0	8.8	19	19	169 Btuh
	Window Total				105 (sqft)					2028 Btuh

Walls	Type	R-Value/U-Value	Area(sqft)	HTM	Load
1	Frame - Wood - Ext	19.0/0.08	885.7	1.5	1328 Btuh
	Wall Total		886 (sqft)		1328 Btuh
Doors	Type		Area (sqft)	HTM	Load
1	Insulated - Exterior		40.0	9.8	392 Btuh
	Door Total		40 (sqft)		392 Btuh
Ceilings	Type/Color/Surface	R-Value	Area(sqft)	HTM	Load
1	Vented Attic/White/Metal	30.0	486.0	0.5	263 Btuh
	Ceiling Total		486 (sqft)		263 Btuh
Floors	Type	R-Value	Size	HTM	Load
1	Slab On Grade	5.0	79 (ft(p))	0.0	0 Btuh
	Floor Total		78.7 (sqft)		0 Btuh
			Zone Envelope Subtotal:		4011 Btuh

Infiltration	Type	ACH	Volume(cuft)	wall area(sqft)	CFM=	Load
	SensibleNatural	0.70	4632	886	54.0	1006 Btuh
Internal gain		Occupants	Btuh/occupant		Appliance	Load
		2	X 230	+	1200	1660 Btuh
				Sensible Envelope Load:		6677 Btuh
Duct load	Prop. leak free, Supply(R6.0-Attic), Return(R6.0-Attic)				(DGM of 0.118)	791 Btuh
				Sensible Zone Load		**7468 Btuh**

Manual J Summer Calculations

Residential Load - Component Details (continued)

Lance Pound
SW Stillview Glen
, FL 32024-

Project Title:
Lance Pound - Cottage

Code Only
Professional Version
Climate: North

3/24/2011

WHOLE HOUSE TOTALS

Whole House Totals for Cooling	**Sensible Envelope Load All Zones**	**6677**	**Btuh**
	Sensible Duct Load	791	Btuh
	Total Sensible Zone Loads	**7468**	**Btuh**
	Sensible ventilation	0	Btuh
	Blower	0	Btuh
	Total sensible gain	**7468**	**Btuh**
	Latent infiltration gain (for 54 gr. humidity difference)	1975	Btuh
	Latent ventilation gain	0	Btuh
	Latent duct gain	165	Btuh
	Latent occupant gain (2 people @ 200 Btuh per person)	400	Btuh
	Latent other gain	0	Btuh
	Latent total gain	**2540**	**Btuh**
	TOTAL GAIN	**10008**	**Btuh**

EQUIPMENT

1. Central Unit	#	18600 Btuh

*Key: Window types (Pn - Number of panes of glass)
(SHGC - Shading coefficient of glass as SHGC numerical value or as clear or tint)
(U - Window U-Factor or 'DEF' for default)
(InSh - Interior shading device: none(N), Blinds(B), Draperies(D) or Roller Shades(R))
(ExSh - Exterior shading device: none(N) or numerical value)
(BS - Insect screen: none(N), Full(F) or Half(H))
(Ornt - compass orientation)

Version 8
For Florida residences only

Residential Window Diversity

MidSummer

Lance Pound
SW Stillview Glen
, FL 32024-

Project Title:
Lance Pound - Cottage

Code Only
Professional Version
Climate: North

3/24/2011

Weather data for: Gainesville - Defaults

Summer design temperature	92 F	Average window load for July	2730 Btuh
Summer setpoint	75 F	Peak window load for July	3495 Btuh
Summer temperature difference	17 F	Excusion limit(130% of Ave.)	3548 Btuh
Latitude	29 North	Window excursion (July)	None

WINDOW Average and Peak Loads

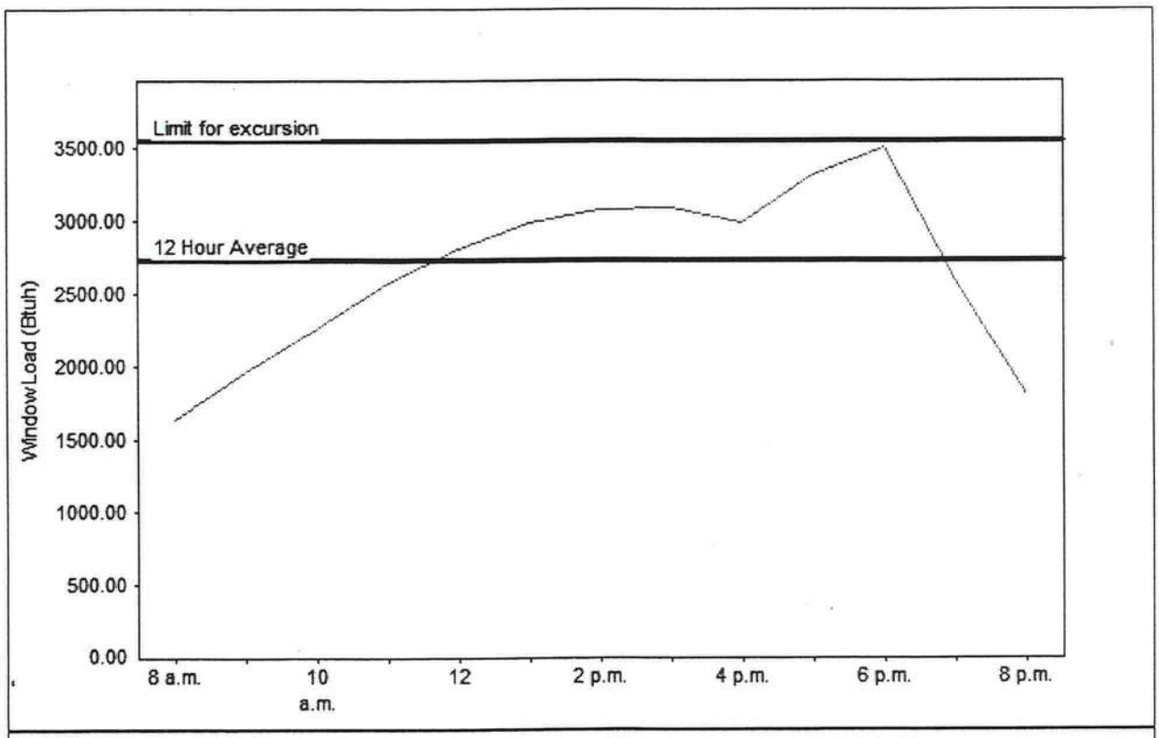

Total July Window Load(Radiation and conduction)

The midsummer window load for this house does not exceed the window load excursion limit.
This house has adequate midsummer window diversity.

EnergyGauge® System Sizing for Florida residences only
PREPARED BY: _____
DATE: 3/24/11

EnergyGauge® FLRCPB v4.5.2

LANCE POUND

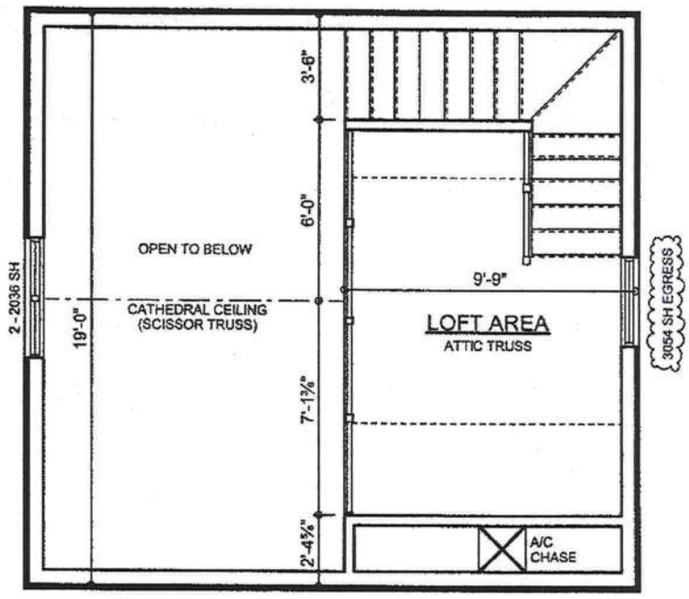

LOFT FLOOR PLAN

SCALE: 1/4" = 1'-0"

COLUMBIA COUNTY BUILDING DEPARTMENT
Received
for
FILE COPY
Code
Compliance
PLANS EXAMINER

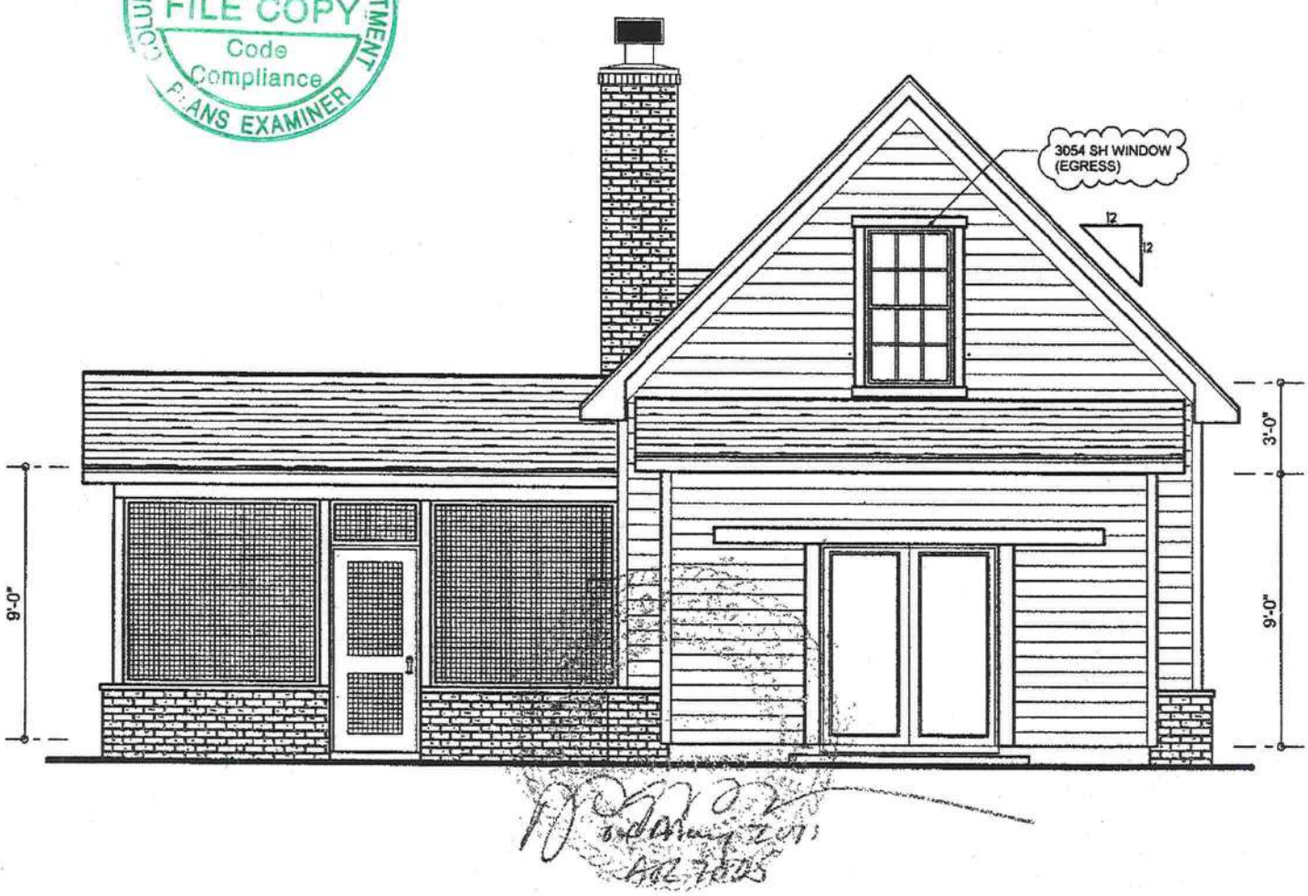

WILLIAM MYERS DESIGN

P.O. Box 1513 Lake City, Fl 32056 386.758.8406 phone 386.752.7158 fax

Facsimile Transmittal Cover Sheet

To: Plans Review

Attention: Troy Crews

Fax: (386) 758-2160 **Phone:**

From: Will Myers

Number of pages: 2 (including cover sheet) **Date:** 05/04/2011

Comments:

Project information: ***Lance Pound***

Troy,

Please see attached signed and sealed drawing page reflecting the egress window change Located in the loft area.

If you have any additional questions, please do not hesitate to contact me!

Thank you,

WILL MYERS

DATE 06/07/2011

Columbia County Building Permit

This Permit Must Be Prominently Posted on Premises During Construction

PERMIT
000029461

APPLICANT T.LANCE POUND PHONE 305.484.2621

ADDRESS 16740 SW 300TH STREET HOMESTEAD FL 33030

OWNER T. LANCE POUND PHONE 305.484.2621

ADDRESS 315 SW STILLVIEW GLN ~~LAKE CITY~~ Fort White FL 32038

CONTRACTOR T.LANCE POUND PHONE 305.484.2621

LOCATION OF PROPERTY 47-S TO HERLONG RD,TL TO SKYLINE,TR TO STILLVIEW,TL AND IT'S @ THE END ON L.

TYPE DEVELOPMENT SFD/UTILITY ESTIMATED COST OF CONSTRUCTION 48950.00

HEATED FLOOR AREA 502.00 TOTAL AREA 979.00 HEIGHT 22.00 STORIES 1

FOUNDATION CONC WALLS FRAMED ROOF PITCH 12'12 FLOOR CONC

LAND USE & ZONING A-3 MAX. HEIGHT

Minimum Set Back Requirments: STREET-FRONT 30.00 REAR 25.00 SIDE 25.00

NO. EX.D.U. 0 FLOOD ZONE X DEVELOPMENT PERMIT NO.

PARCEL ID 11-6S-16-03815-117 SUBDIVISION CARDINAL FARMS

LOT 17 BLOCK PHASE UNIT TOTAL ACRES 10.01

Culvert Permit No.	Culvert Waiver	Contractor's License Number	Applicant/Owner/Contractor
		OWNER	

Driveway Connection	Septic Tank Number	LU & Zoning checked by	Approved for Issuance	New Resident
EXISTING	11-0232-E	BLK	TC	Y

COMMENTS: 1 FOOT ABOVE ROAD. NOC ON FILE.

Check # or Cash 7502

FOR BUILDING & ZONING DEPARTMENT ONLY

Temporary Power _____ date/app. by Foundation _____ date/app. by Monolithic (footer/Slab) _____ date/app. by

Under slab rough-in plumbing _____ date/app. by Slab _____ date/app. by Sheathing/Nailing _____ date/app. by

Framing _____ date/app. by Insulation _____ date/app. by

Rough-in plumbing above slab and below wood floor _____ date/app. by Electrical rough-in _____ date/app. by

Heat & Air Duct _____ date/app. by Peri. beam (Lintel) _____ date/app. by Pool _____ date/app. by

Permanent power _____ date/app. by C.O. Final _____ date/app. by Culvert _____ date/app. by

Pump pole _____ date/app. by Utility Pole _____ date/app. by M/H tie downs, blocking, electricity and plumbing _____ date/app. by

Reconnection _____ date/app. by RV _____ date/app. by Re-roof _____ date/app. by

BUILDING PERMIT FEE $ 245.00 CERTIFICATION FEE $ 4.90 SURCHARGE FEE $ 4.90

MISC. FEES $ 0.00 ZONING CERT. FEE $ 50.00 FIRE FEE $ 0.00 WASTE FEE $

FLOOD DEVELOPMENT FEE $ FLOOD ZONE FEE $ 25.00 CULVERT FEE $ **TOTAL FEE** 329.80

INSPECTORS OFFICE CLERKS OFFICE

NOTICE: IN ADDITION TO THE REQUIREMENTS OF THIS PERMIT, THERE MAY BE ADDITIONAL RESTRICTIONS APPLICABLE TO THIS PROPERTY THAT MAY BE FOUND IN THE PUBLIC RECORDS OF THIS COUNTY. AND THERE MAY BE ADDITIONAL PERMITS REQUIRED FROM OTHER GOVERNMENTAL ENTITIES SUCH AS WATER MANAGEMENT DISTRICTS, STATE AGENCIES, OR FEDERAL AGENCIES.

"WARNING TO OWNER: YOUR FAILURE TO RECORD A NOTICE OF COMMENCEMENT MAY RESULT IN YOUR PAYING TWICE FOR IMPROVEMENTS TO YOUR PROPERTY. IF YOU INTEND TO OBTAIN FINANCING, CONSULT WITH YOUR LENDER OR AN ATTORNEY BEFORE RECORDING YOUR NOTICE OF COMMENCEMENT."

EVERY PERMIT ISSUED SHALL BECOME INVALID UNLESS THE WORK AUTHORIZED BY SUCH PERMIT IS COMMENCED WITHIN 180 DAYS AFTER ITS ISSUANCE, OR IF THE WORK AUTHORIZED BY SUCH PERMIT IS SUSPENDED OR ABANDONED FOR A PERIOD OF 180 DAYS AFTER THE TIME THE WORK IS COMMENCED. A VALID PERMIT RECIEVES AN APPROVED INSPECTION EVERY 180 DAYS. WORK SHALL BE CONSIDERED NOT SUSPENDED, ABANDONED OR INVALID WHEN THE PERMIT HAS RECIEVED AN APPROVED INSPECTION WITHIN 180 DAYS OT THE PREVIOUS INSPECTION.

The Issuance of this Permit Does Not Waive Compliance by Permittee with Deed Restrictions.

ITW Building Components Group, Inc.

1950 Marley Drive Haines City, FL 33844
Florida Engineering Certificate of Authorization Number: 0 278
Florida Certificate of Product Approval # FL1999
 Document ID:1UAI487-Z0224153133

DOUGLAS FLEMING LICENSE No. 66648 STATE OF FLORIDA PROFESSIONAL ENGINEER
03/24/2011

Truss Fabricator:	Anderson Truss Company
Job Identification:	11-059--Fill in later LANCE POUND -- , **
Truss Count:	13
Model Code:	Florida Building Code 2007 and 2009 Supplement
Truss Criteria:	FBC2007Res/TPI-2002(STD)
Engineering Software:	Alpine Software,Version 9.05.
Structural Engineer of Record:	The identity of the structural EOR did not exist as of
Address:	the seal date per section 61G15-31.003(5a) of the FAC
Minimum Design Loads:	Roof - 40.0 PSF @ 1.25 Duration
	Floor - N/A
	Wind - 110 MPH ASCE 7-05 -Closed

Notes:

1. Determination as to the suitability of these truss components for the structure is the responsibility of the building designer/engineer of record, as defined in ANSI/TPI 1
2. The drawing date shown on this index sheet must match the date shown on the individual truss component drawing.
3. As shown on attached drawings; the drawing number is preceded by: HCUSR487

Douglas Fleming
-Truss Design Engineer-

1950 Marley Drive
Haines City, FL 33844

Details: BRCLBSUB-A1103005-GBLLETIN-A1101505-PB120-

#	Ref Description	Drawing#	Date
1	56544--AGE	11083016	03/24/11
2	56545--A1	11083017	03/24/11
3	56546--A	11083018	03/24/11
4	56547--AV	11083019	03/24/11
5	56548--AVGE	11083020	03/24/11
6	56549--B	11083012	03/24/11
7	56550--BGE	11083021	03/24/11
8	56551--C	11083013	03/24/11
9	56552--CGE	11083022	03/24/11
10	56553--D	11083014	03/24/11
11	56554--DGE	11083015	03/24/11
12	56555--APGE	11083023	03/24/11
13	56556--AP	11083024	03/24/11

COLUMBIA COUNTY BUILDING DEPARTMENT
Received for FILE COPY
Code Compliance
PLANS EXAMINER

Roof Plane Sheathing Area = 1322 sq. ft

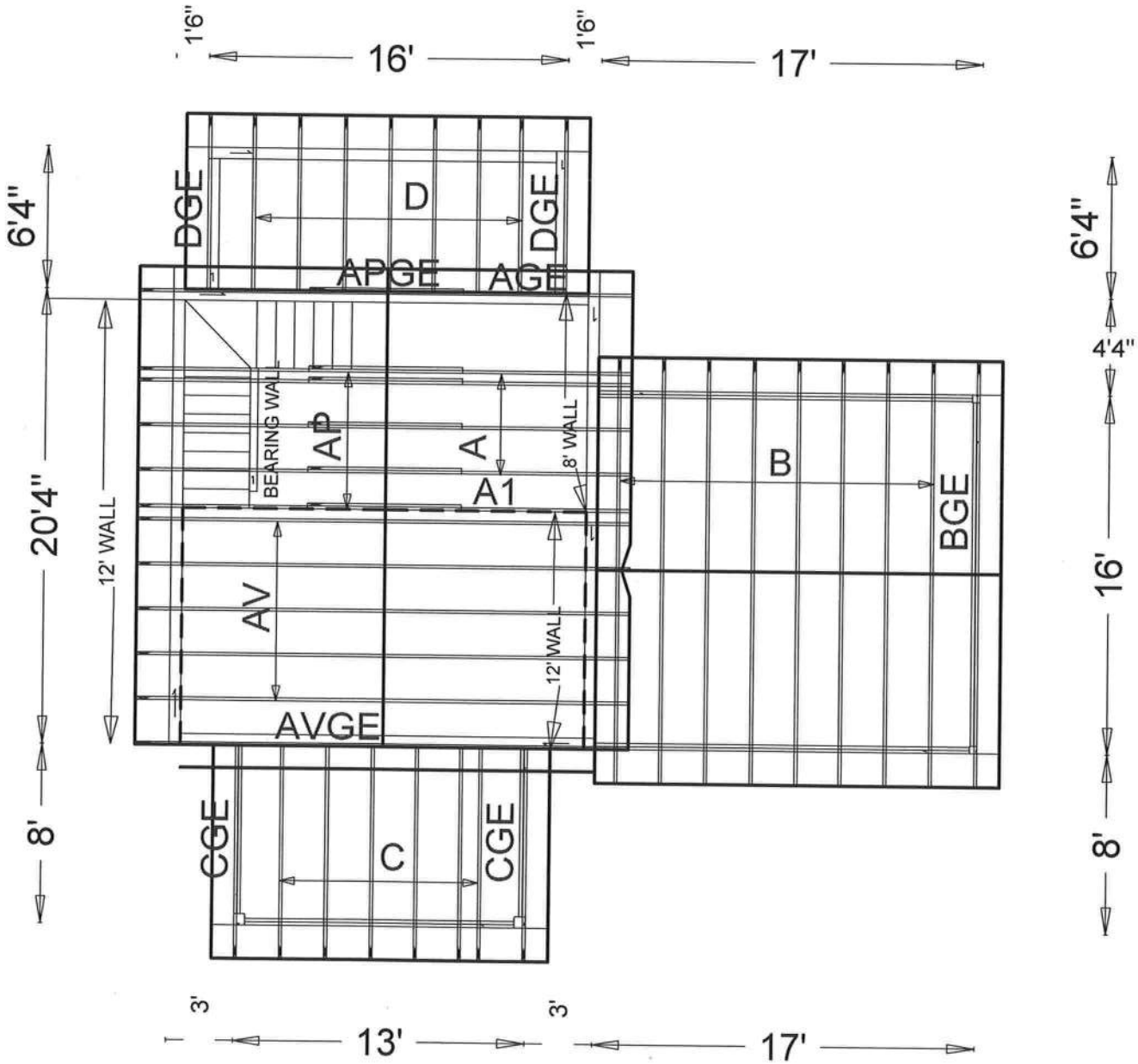

LANCE POUND

JOB DESCRIPTION:: Fill in later
/: LANCE POUND

JOB NO:
11-059

PAGE NO:
1 OF 1

THIS DWG PREPARED FROM COMPUTER INPUT (LOADS & DIMENSIONS) SUBMITTED BY TRUSS MFR.

(11-059--Fill in later LANCE POUND -- , ** - AGE)

Top chord 2x4 SP #2 Dense :T2, T5 2x6 SP #2:
Bot chord 2x10 SP SS
Webs 2x4 SP #3

End verticals not exposed to wind pressure.

Roof overhang supports 2.00 psf soffit load.

Truss spaced at 24.0" OC designed to support 1-0-0 top chord outlookers. Cladding load shall not exceed 10.00 PSF. Top chord must not be cut or notched.

Bottom chord checked for 10.00 psf non-concurrent live load.

BC attic room floor loading: LL = 40.00 psf; DL = 10.00 psf; from 2-4-10 to 16-8-14.

(**) 2 plate(s) require special positioning. Refer to scaled plate plot details for special positioning requirements.

110 mph wind, 15.00 ft mean hgt, ASCE 7-05, CLOSED bldg, Located anywhere in roof, CAT II, EXP B, wind TC DL=5.0 psf, wind BC DL=5.0 psf. Iw=1.00 GCpi(+/-)=0.18

Wind reactions based on MWFRS pressures.

In lieu of structural panels use purlins to brace all flat TC @ 24" OC.

Collar-tie braced with continuous lateral bracing at 24" OC. or rigid ceiling.

Deflection meets L/240 live and L/360 total load.

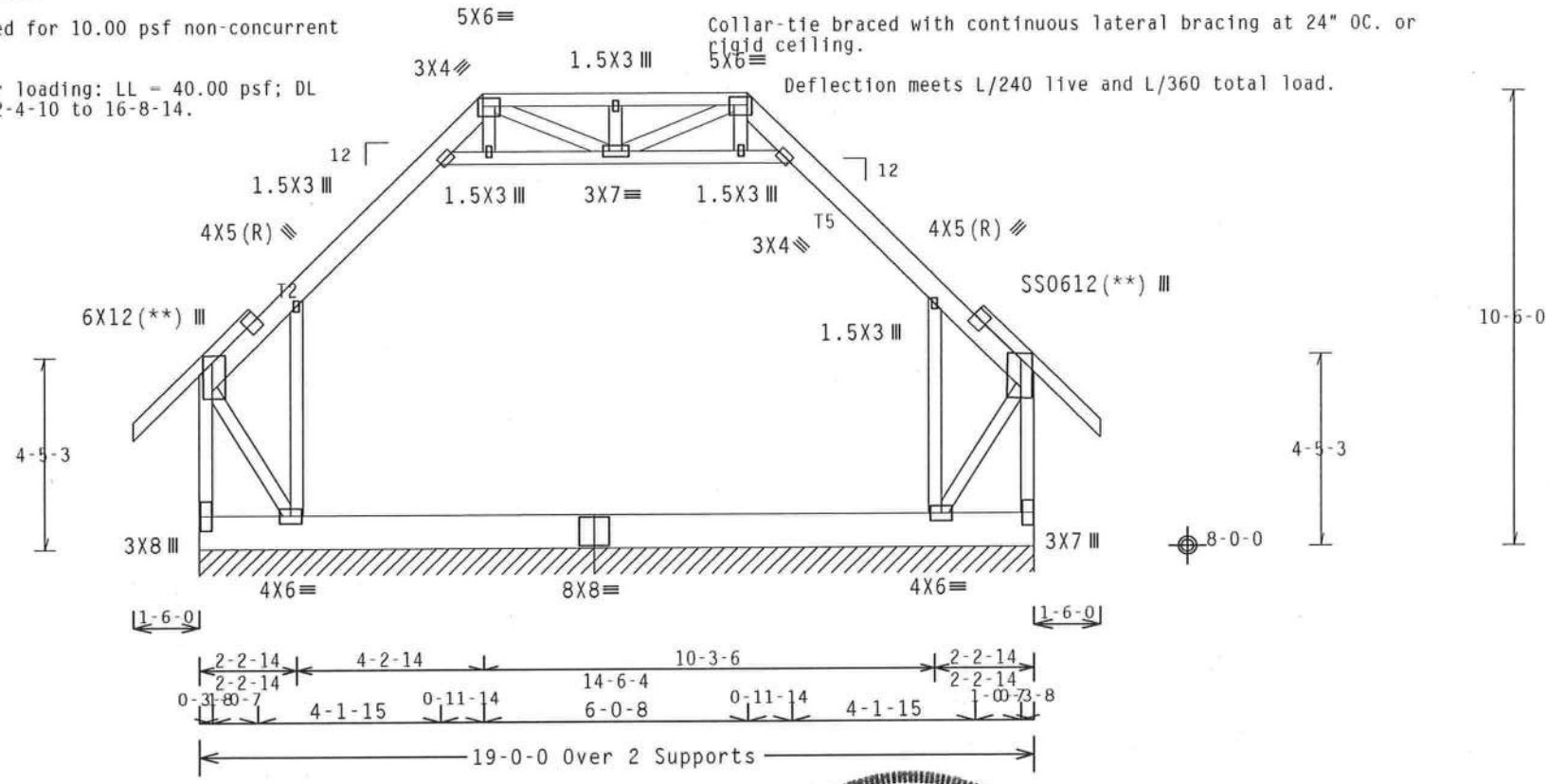

R=268 PLF U=9 PLF W=9-0-0
RL=29/-29 PLF

R=171 PLF U=11 PLF W=10-0-0

Design Crit: FBC2007Res/TPI-2002(STD)
FT/RT=10%(0%)/0(0)

PLT TYP. 18 Gauge HS,Wave

9.05.03.0319.17

QTY: FL/-/4/-/-/R/-

Scale =.25"/Ft.

DOUGLAS FLEMING LICENSE No. 66648 STATE OF FLORIDA PROFESSIONAL ENGINEER

03/24/2011

TC LL	20.0 PSF	REF R487-- 56544
TC DL	10.0 PSF	DATE 03/24/11
BC DL	10.0 PSF	DRW HCUSR487 11083016
BC LL	0.0 PSF	HC-ENG DF/DF
TOT.LD.	40.0 PSF	SEQN- 192466
DUR.FAC.	1.25	
SPACING	24.0"	JREF- 1UAI487_Z02

ALPINE
ITW Building Components Group Inc.
Haines City, FL 33844
FL COA #0 278

WARNING READ AND FOLLOW ALL NOTES ON THIS SHEET!
IMPORTANT FURNISH THIS DESIGN TO ALL CONTRACTORS INCLUDING INSTALLERS.

Trusses require extreme care in fabricating, handling, shipping, installing and bracing. Refer to and follow the latest edition of BCSI (Building Component Safety Information, by TPI and WTCA) for general practices prior to performing these functions. Installers shall provide temporary bracing per BCSI. Unless noted otherwise, top chord shall have properly attached structural sheathing and bottom chord shall have a properly attached rigid ceiling. Locations shown for permanent lateral restraint of webs shall have bracing installed per BCSI sections B3, B7 or B10, as applicable.

ITW Building Components Group Inc. (ITWBCG) shall not be responsible for any deviation from this drawing, any failure to build the truss in conformance with ANSI/TPI 1, or for handling, shipping, installation and bracing of trusses. Apply plates to each face of truss and position as shown above and on the Joint Details, unless noted otherwise. Refer to drawings 160A-Z for standard plate positions. A seal on this drawing or cover page listing this drawing, indicates acceptance of professional engineering responsibility solely for the design shown. The suitability and use of this design for any structure is the responsibility of the Building Designer per ANSI/TPI 1 Sec.2. For more information see: This job's general notes page; ITW-BCG: www.itwbcg.com; TPI: www.tpinst.org; WTCA: www.sbcindustry.com; ICC: www.iccsafe.org

(11-059--Fill in later LANCE POUND -- , ** - A1)

Top chord 2x4 SP #2 Dense :T2, T5, T6 2x6 SP #2:
Bot chord 2x10 SP #2 :B1 2x4 SP #2 Dense:
Webs 2x4 SP #3

Roof overhang supports 2.00 psf soffit load.

(A) Continuous lateral bracing equally spaced on member.

In lieu of structural panels use purlins to brace all flat TC @ 24" OC.

BC attic room floor loading: LL = 40.00 psf; DL = 10.00 psf; from 4-0-0 to 16-7-6.

110 mph wind, 15.00 ft mean hgt, ASCE 7-05, CLOSED bldg, Located anywhere in roof, CAT II, EXP B, wind TC DL=5.0 psf, wind BC DL=5.0 psf. Iw=1.00 GCpi(+/-)=0.18

Wind reactions based on MWFRS pressures.

Right end vertical not exposed to wind pressure.

Bottom chord checked for 10.00 psf non-concurrent live load.

Collar-tie braced with continuous lateral bracing at 24" OC. or rigid ceiling.

Deflection meets L/360 live and L/240 total load.

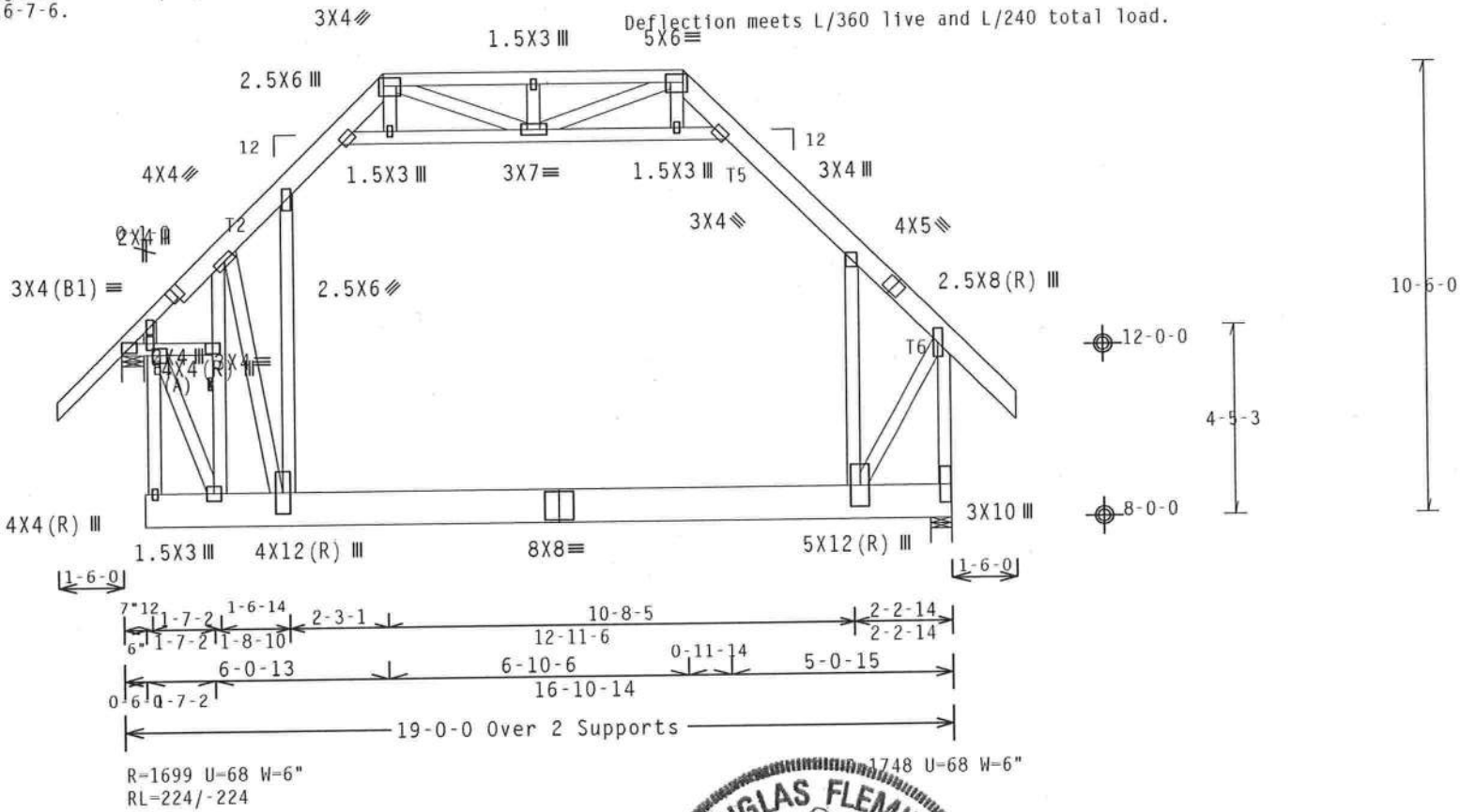

Design Crit: FBC2007Res/TPI-2002(STD)
FT/RT=10%(0%)/0(0)

9.05.03.0319.17 QTY 1 FL/-/4/-/-/R/- Scale =.25"/Ft.

PLT TYP. Wave

ALPINE
ITW Building Components Group Inc.
Haines City, FL 33844
FL COA #0 278

WARNING READ AND FOLLOW ALL NOTES ON THIS SHEET!
IMPORTANT FURNISH THIS DESIGN TO ALL CONTRACTORS INCLUDING INSTALLERS.

Trusses require extreme care in fabricating, handling, shipping, installing and bracing. Refer to and follow the latest edition of BCSI (Building Component Safety Information, by TPI and WTCA) for safety practices prior to performing these functions. Installers shall provide temporary bracing per BCSI. Unless noted otherwise, top chord shall have properly attached structural sheathing and bottom chord shall have a properly attached rigid ceiling. Locations shown for permanent lateral restraint of webs shall have bracing installed per BCSI sections B3, B7 or B10, as applicable.

ITW Building Components Group Inc. (ITWBCG) shall not be responsible for any deviation from this design, any failure to build the truss in conformance with ANSI/TPI 1, or for handling, shipping, installing and bracing of trusses. Apply plates to each face of truss and position as shown above and on the Joint Details, unless noted otherwise. Refer to drawings 160A-Z for standard plate positions. A seal on this drawing or cover page listing this drawing, indicates acceptance of professional engineering responsibility solely for the design shown. The suitability and use of this design for any structure is the responsibility of the Building Designer per ANSI/TPI 1 Sec.2. For more information see: This job's general notes page; ITW-BCG: www.itwbcg.com; TPI: www.tpinst.org; WTCA: www.sbcindustry.com; ICC: www.iccsafe.org

DOUGLAS FLEMING LICENSE No.66648 STATE OF FLORIDA PROFESSIONAL ENGINEER
03/24/2011

TC LL	20.0 PSF	REF	R487-- 56545
TC DL	10.0 PSF	DATE	03/24/11
BC DL	10.0 PSF	DRW	HCUSR487 11083017
BC LL	0.0 PSF	HC-ENG	DF/DF
TOT.LD.	40.0 PSF	SEQN-	192456
DUR.FAC.	1.25		
SPACING	24.0"	JREF-	1UAI487_Z02

(11-059--Fill in later LANCE POUND -- , ** - A)

THIS DWG PREPARED FROM COMPUTER INPUT (LOADS & DIMENSIONS) SUBMITTED BY TRUSS MFR.

Top chord 2x4 SP #2 Dense :T2, T5 2x6 SP #2:
Bot chord 2x4 SP #2 Dense :B2 2x10 SP SS:
Webs 2x4 SP #3 :W1 2x6 SP SS:

Roof overhang supports 2.00 psf soffit load.

Calculated horizontal deflection is 0.39" due to live load and 0.33" due to dead load.

In lieu of structural panels use purlins to brace all flat TC @ 24" OC.

Collar-tie braced with continuous lateral bracing at 24" OC. or rigid ceiling.

Deflection meets L/240 live and L/360 total load.

(**) 1 plate(s) require special positioning. Refer to scaled plate plot details for special positioning requirements.

110 mph wind, 15.00 ft mean hgt, ASCE 7-05, CLOSED bldg, Located anywhere in roof, CAT II, EXP B, wind TC DL=5.0 psf, wind BC DL=5.0 psf. Iw=1.00 GCpi(+/-)=0.18

Wind reactions based on MWFRS pressures.

Right end vertical not exposed to wind pressure.

Bottom chord checked for 10.00 psf non-concurrent live load.

BC attic room floor loading: LL = 40.00 psf; DL = 10.00 psf; from 3-9-8 to 16-7-6.

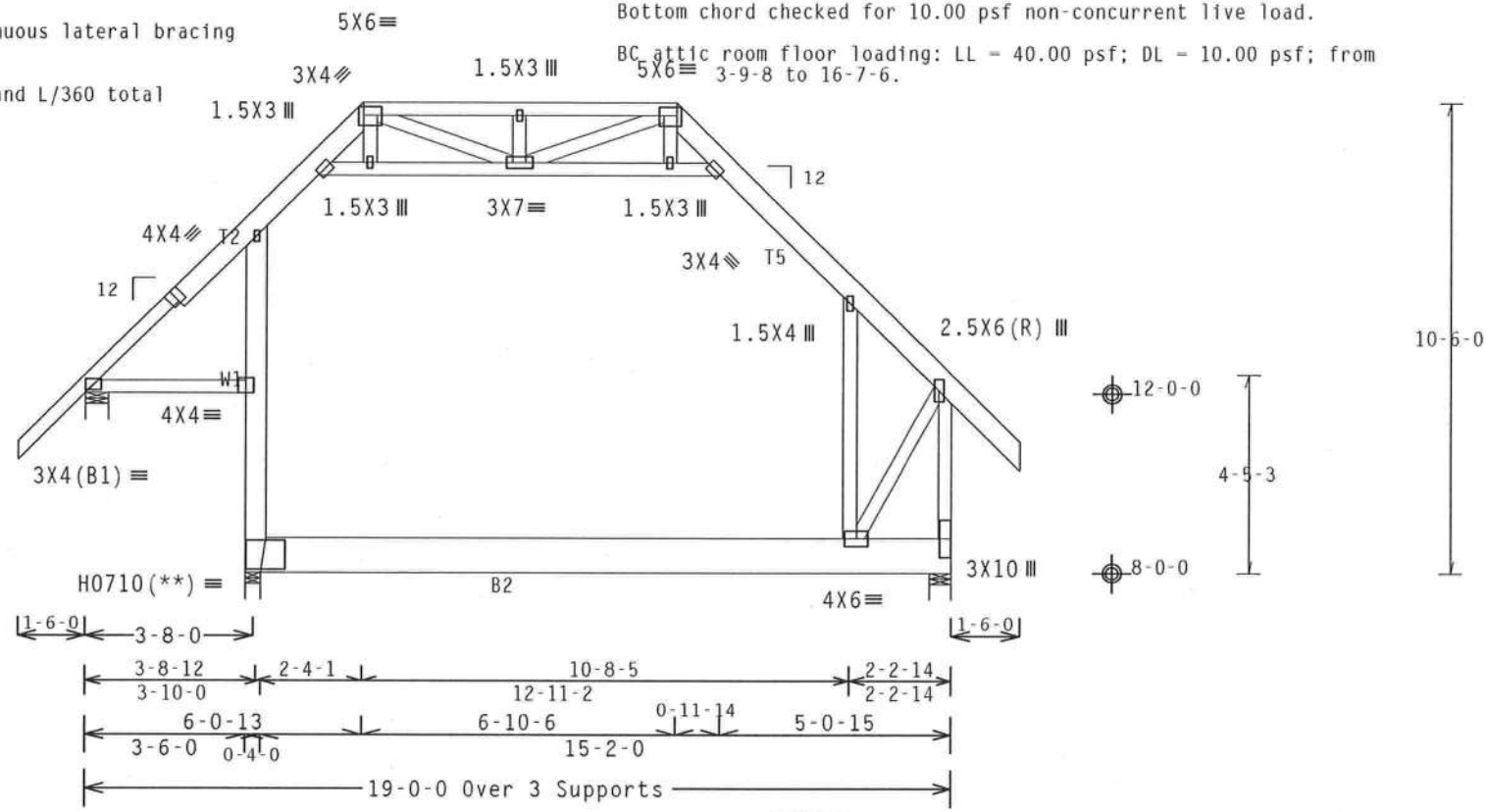

Design Crit: FBC2007Res/TPI-2002(STD)

PLT TYP. 20 Gauge HS,Wave

FT/RT=10%(0%)/0(0)

9.05.03.0319.17 QTY 4

FL/-/4/-/-/R/-

Scale =.25"/Ft.

ALPINE
ITW Building Components Group Inc.
Haines City, FL 33844
FL COA #0 278

WARNING READ AND FOLLOW ALL NOTES ON THIS SHEET!
IMPORTANT FURNISH THIS DESIGN TO ALL CONTRACTORS INCLUDING INSTALLERS.

Trusses require extreme care in fabricating, handling, shipping, installing and bracing. Refer to and follow the latest edition of BCSI (Building Component Safety Information, by TPI and WTCA) for safety practices prior to performing these functions. Installers shall provide temporary bracing per BCSI. Unless noted otherwise, top chord shall have properly attached structural sheathing and bottom chord shall have a properly attached rigid ceiling. Locations shown for permanent lateral restraint of webs shall have bracing installed per BCSI sections B3, B7 or B10, as applicable.

ITW Building Components Group Inc. (ITWBCG) shall not be responsible for any deviation from this design, any failure to build the truss in conformance with ANSI/TPI 1, or for handling, shipping, installing and bracing of trusses. Apply plates to each face of truss and position as shown above and on the Joint Details, unless noted otherwise. Refer to drawings 160A-Z for standard plate positions. A seal on this drawing or cover page listing this drawing, indicates acceptance of professional engineering responsibility solely for the design shown. The suitability and use of this design for any structure is the responsibility of the Building Designer per ANSI/TPI 1 Sec.2. For more information see: This job's general notes page; ITW-BCG: www.itwbcg.com; TPI: www.tpinst.org; WTCA: www.sbcindustry.com; ICC: www.iccsafe.org

DOUGLAS FLEMING LICENSE No.66648 STATE OF FLORIDA PROFESSIONAL ENGINEER

03/24/2011

TC LL	20.0	PSF
TC DL	10.0	PSF
BC DL	10.0	PSF
BC LL	0.0	PSF
TOT.LD.	40.0	PSF
DUR.FAC.	1.25	
SPACING	24.0"	

REF	R487-- 56546
DATE	03/24/11
DRW	HCUSR487 11083018
HC-ENG	DF/DF
SEQN-	192460
JREF-	1UAI487_Z02

(11-059--Fill in later LANCE POUND -- , ** - AV)

THIS DWG PREPARED FROM COMPUTER INPUT (LOADS & DIMENSIONS) SUBMITTED BY TRUSS MFR.

Top chord 2x4 SP #2 Dense
Bot chord 2x6 SP #2 :B2, B3 2x4 SP #2 Dense:
Webs 2x4 SP #3

Roof overhang supports 2.00 psf soffit load.

Calculated horizontal deflection is 0.17" due to live load and 0.21" due to dead load.

110 mph wind, 16.43 ft mean hgt, ASCE 7-05, CLOSED bldg, Located anywhere in roof, CAT II, EXP B, wind TC DL=5.0 psf, wind BC DL=5.0 psf. Iw=1.00 GCpi(+/-)=0.18

Wind reactions based on MWFRS pressures.

Bottom chord checked for 10.00 psf non-concurrent live load.

Deflection meets L/240 live and L/180 total load.

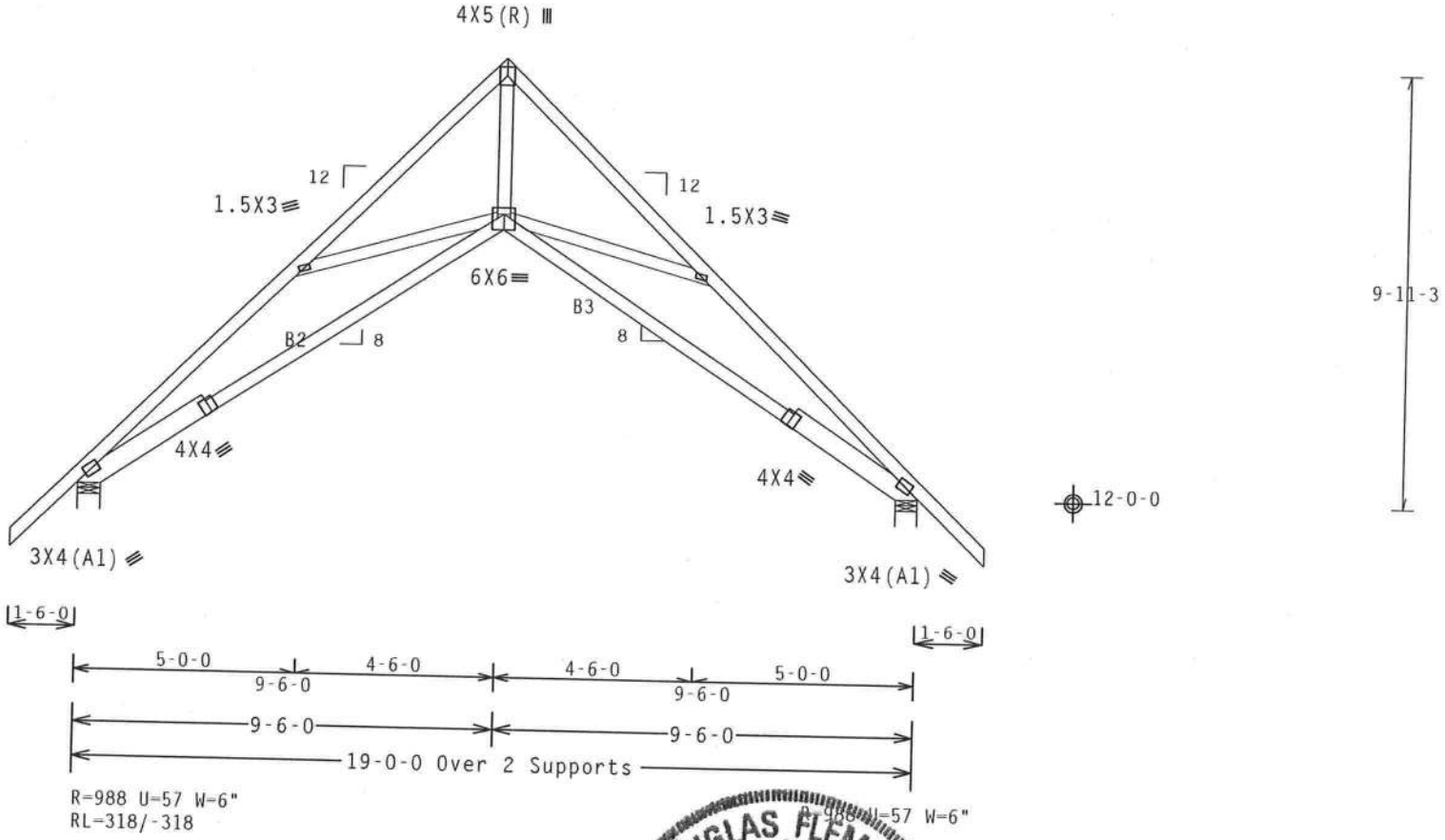

PLT TYP. Wave

Design Crit: FBC2007Res/TPI-2002(STD)
FT/RT=10%(0%)/0(0)

09.05.03.0319.17

QTY:

FL/-/4/-/-/R/-

Scale =.25"/Ft.

ALPINE
ITW Building Components Group Inc.
Haines City, FL 33844
FL COA #0 278

WARNING READ AND FOLLOW ALL NOTES ON THIS SHEET!
IMPORTANT FURNISH THIS DESIGN TO ALL CONTRACTORS INCLUDING INSTALLERS.

Trusses require extreme care in fabricating, handling, shipping, installing and bracing. Refer to and follow the latest edition of BCSI (Building Component Safety Information, by TPI and WTCA) for recommended practices prior to performing these functions. Installers shall provide temporary bracing per BCSI. Unless noted otherwise, top chord shall have properly attached structural sheathing and bottom chord shall have a properly attached rigid ceiling. Locations shown for permanent lateral restraint of webs shall have bracing installed per BCSI sections B3, B7 or B10, as applicable.

ITW Building Components Group Inc. (ITWBCG) shall not be responsible for any deviation from this design, any failure to build the truss in conformance with ANSI/TPI 1, or for handling, shipping, installation and bracing of trusses. Apply plates to each face of truss and position as shown above and on the Joint Details, unless noted otherwise. Refer to drawings 160A-2 for standard plate positions. A seal on this drawing or cover page listing this drawing, indicates acceptance of professional engineering responsibility solely for the design shown. The suitability and use of this design for any structure is the responsibility of the Building Designer per ANSI/TPI 1 Sec.2. For more information see: This job's general notes page; ITW-BCG: www.itwbcg.com; TPI: www.tpinst.org; WTCA: www.sbcindustry.com; ICC: www.iccsafe.org

DOUGLAS FLEMING LICENSE No. 66648 STATE OF FLORIDA PROFESSIONAL ENGINEER
03/24/2011

TC LL	20.0 PSF	REF R487-- 56547
TC DL	10.0 PSF	DATE 03/24/11
BC DL	10.0 PSF	DRW HCUSR487 11083019
BC LL	0.0 PSF	HC-ENG DF/DF
TOT.LD.	40.0 PSF	SEQN- 192382
DUR.FAC.	1.25	
SPACING	24.0"	JREF- 1UAI487_Z02

THIS DWG PREPARED FROM COMPUTER INPUT (LOADS & DIMENSIONS) SUBMITTED BY TRUSS MFR.

(11-059--Fill in later LANCE POUND -- , ** - AVGE)

Top chord 2x4 SP #2 Dense
Bot chord 2x4 SP #2 Dense
Webs 2x4 SP #3
:Stack Chord SC1 2x4 SP #2 Dense::Stack Chord SC2 2x4 SP #2 Dense:

Roof overhang supports 2.00 psf soffit load.

See DWGS A11030050109 & GBLLETIN0109 for more requirements.

Stacked top chord must NOT be notched or cut in area (NNL). Dropped

(SC) to dropped top chord in notchable area using 3x4 tie-plates 24" o.c. Center plate on stacked/dropped chord interface, plate length perpendicular to chord length. Splice top chord in notchable area using 3x6.

110 mph wind, 16.23 ft mean hgt, ASCE 7-05, CLOSED bldg, Located anywhere in roof, CAT II, EXP B, wind TC DL=5.0 psf, wind BC DL=5.0 psf. Iw=1.00 GCpi(+/-)=0.18

Wind reactions based on MWFRS pressures.

Truss spaced at 24.0" OC designed to support 1-0-0 top chord outlookers. Cladding load shall not exceed 10.00 PSF. Top chord must not be cut or notched.

Bottom chord checked for 10.00 psf non-concurrent live load.

Deflection meets L/240 live and L/180 total load.

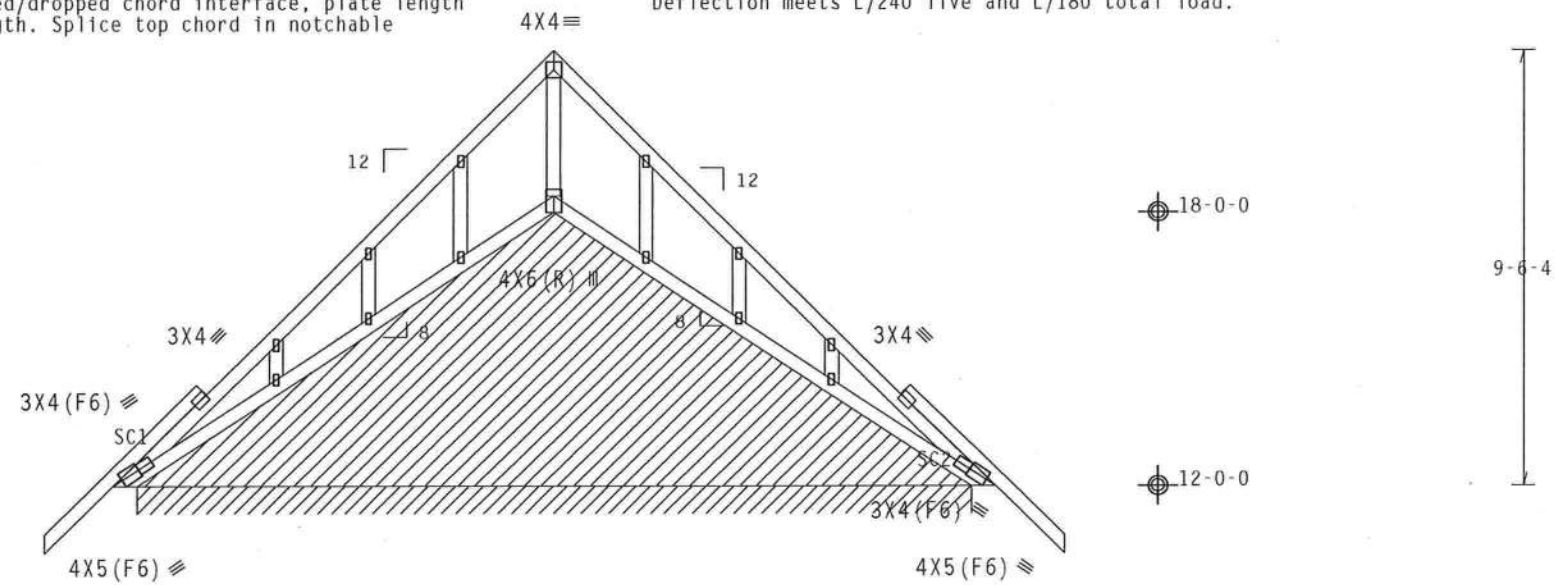

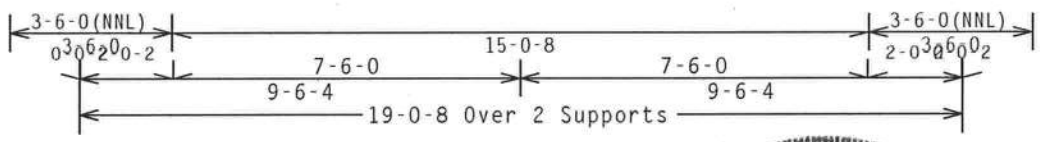

R=128 PLF U=14 PLF W=18-0-0
RL=17/-17 PLF

Note: All Plates Are 1.5X3 Except As Shown.

Design Crit: FBC2007Res/TPI-2002(STD)

PLT TYP. Wave FT/RT=10%(0%)/0(0) 9.05.03.0319.17 QTY: FL/-/4/-/-/R/- Scale =.25"/Ft.

DOUGLAS FLEMING LICENSE No. 66648 STATE OF FLORIDA PROFESSIONAL ENGINEER 03/24/2011

ALPINE
ITW Building Components Group Inc.
Haines City, FL 33844
FL COA #0 278

WARNING READ AND FOLLOW ALL NOTES ON THIS SHEET!
IMPORTANT FURNISH THIS DESIGN TO ALL CONTRACTORS INCLUDING INSTALLERS.

Trusses require extreme care in fabricating, handling, shipping, installing and bracing. Refer to and follow the latest edition of BCSI (Building Component Safety Information, by TPI and WTCA) for handling practices prior to performing these functions. Installers shall provide temporary bracing per BCSI. Unless noted otherwise, top chord shall have properly attached structural sheathing and bottom chord shall have a properly attached rigid ceiling. Locations shown for permanent lateral restraint of webs shall have bracing installed per BCSI sections B3, B7 or B10, as applicable.

ITW Building Components Group Inc. (ITWBCG) shall not be responsible for any deviation from this design, any failure to build the truss in conformance with ANSI/TPI 1, or for handling, shipping, installation and bracing of trusses. Apply plates to each face of truss and position as shown above and on the Joint Details, unless noted otherwise. Refer to drawings 160A-Z for standard plate positions. A seal on this drawing or cover page listing this drawing, indicates acceptance of professional engineering responsibility solely for the design shown. The suitability and use of this design for any structure is the responsibility of the Building Designer per ANSI/TPI 1 Sec.2. For more information see: This job's general notes page; ITW-BCG: www.itwbcg.com; TPI: www.tpinst.org; WTCA: www.sbcindustry.com; ICC: www.iccsafe.org

TC LL	20.0 PSF	REF R487-- 56548
TC DL	10.0 PSF	DATE 03/24/11
BC DL	10.0 PSF	DRW HCUSR487 11083020
BC LL	0.0 PSF	HC-ENG DF/DF
TOT.LD.	40.0 PSF	SEQN- 192385
DUR.FAC.	1.25	
SPACING	24.0"	JREF- 1UAI487_Z02

THIS DWG PREPARED FROM COMPUTER INPUT (LOADS & DIMENSIONS) SUBMITTED BY TRUSS MFR.

(11-059--Fill in later LANCE POUND -- , ** - B)

Top chord 2x4 SP #2 Dense
Bot chord 2x4 SP #2 Dense
Webs 2x4 SP #3

Roof overhang supports 2.00 psf soffit load.

Bottom chord checked for 10.00 psf non-concurrent live load.

110 mph wind, 15.00 ft mean hgt, ASCE 7-05, CLOSED bldg, Located anywhere in roof, CAT II, EXP B, wind TC DL=5.0 psf, wind BC DL=5.0 psf. Iw=1.00 GCpi(+/-)=0.18

Wind reactions based on MWFRS pressures.

Deflection meets L/240 live and L/180 total load.

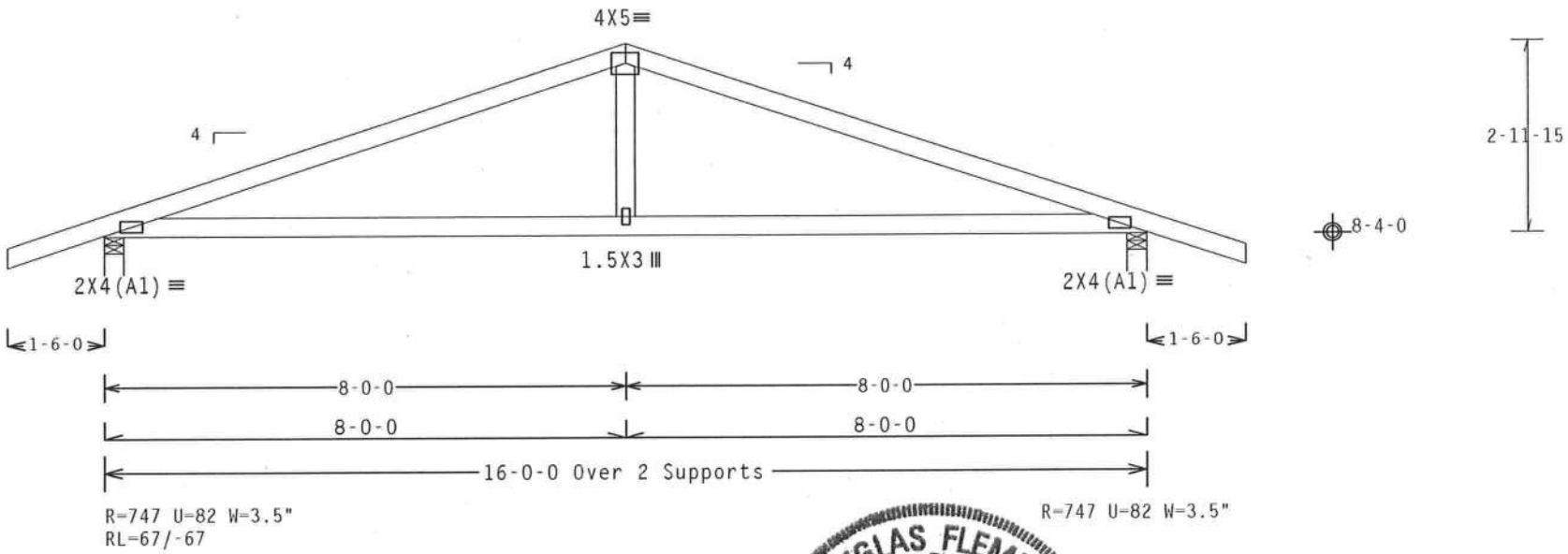

Design Crit: FBC2007Res/TPI-2002(STD)
FT/RT=10%(0%)/0(0)

PLT TYP. Wave

9.05.03.0319.17 QTY:8 FL/-/4/-/-/R/- Scale =.375"/Ft.

ALPINE
ITW Building Components Group Inc.
Haines City, FL 33844
FL COA #0 278

WARNING READ AND FOLLOW ALL NOTES ON THIS SHEET!
IMPORTANT FURNISH THIS DESIGN TO ALL CONTRACTORS INCLUDING INSTALLERS.

Trusses require extreme care in fabricating, handling, shipping, installing and bracing. Refer to and follow the latest edition of BCSI (Building Component Safety Information, by TPI and WTCA) for safety practices prior to performing these functions. Installers shall provide temporary bracing per BCSI. Unless noted otherwise, top chord shall have properly attached structural sheathing and bottom chord shall have a properly attached rigid ceiling. Locations shown for permanent lateral restraint of webs shall have bracing installed per BCSI sections B3, B7 or B10, as applicable.

ITW Building Components Group Inc. (ITWBCG) shall not be responsible for any deviation from this design, any failure to build the truss in conformance with ANSI/TPI 1, or for handling, shipping, installation and bracing of trusses. Apply plates to each face of truss and position as shown above and on the Joint Details, unless noted otherwise. Refer to drawings 160A-Z for standard plate positions. A seal on this drawing or cover page listing this drawing, indicates acceptance of professional engineering responsibility solely for the design shown. The suitability and use of this design for any structure is the responsibility of the Building Designer per ANSI/TPI 1 Sec.2. For more information see: This job's general notes page; ITW-BCG: www.itwbcg.com; TPI: www.tpinst.org; WTCA: www.sbcindustry.com; ICC: www.iccsafe.org

DOUGLAS FLEMING LICENSE No. 66648 STATE OF FLORIDA PROFESSIONAL ENGINEER

03/24/2011

TC LL	20.0 PSF	REF	R487-- 56549
TC DL	10.0 PSF	DATE	03/24/11
BC DL	10.0 PSF	DRW	HCUSR487 11083012
BC LL	0.0 PSF	HC-ENG	DF/DF *
TOT.LD.	40.0 PSF	SEQN-	192364
DUR.FAC.	1.25		
SPACING	24.0"	JREF-	1UAI487_Z02

(11-059--Fill in later LANCE POUND -- , ** - BGE)

THIS DWG PREPARED FROM COMPUTER INPUT (LOADS & DIMENSIONS) SUBMITTED BY TRUSS MFR.

Top chord 2x4 SP #2 Dense
Bot chord 2x4 SP #2 Dense
Webs 2x4 SP #3
:Stack Chord SC1 2x4 SP #2 Dense::Stack Chord SC2 2x4 SP #2 Dense:

Roof overhang supports 2.00 psf soffit load.

See DWGS A11015050109 & GBLLETIN0109 for more requirements.

Stacked top chord must NOT be notched or cut in area (NNL). Dropped top chord braced at 24" o.c. intervals. Attach stacked top chord (SC) to dropped top chord in notchable area using 3x4 tie-plates 24" o.c. Center plate on stacked/dropped chord interface, plate length perpendicular to chord length. Splice top chord in notchable area using 3x6.

110 mph wind, 15.00 ft mean hgt, ASCE 7-05, CLOSED bldg, Located anywhere in roof, CAT II, EXP B, wind TC DL=5.0 psf, wind BC DL=5.0 psf. Iw=1.00 GCpi(+/-)=0.18

Wind reactions based on MWFRS pressures.

Truss spaced at 24.0" OC designed to support 1-0-0 top chord outlookers. Cladding load shall not exceed 10.00 PSF. Top chord must not be cut or notched.

Bottom chord checked for 10.00 psf non-concurrent live load.

Deflection meets L/240 live and L/180 total load.

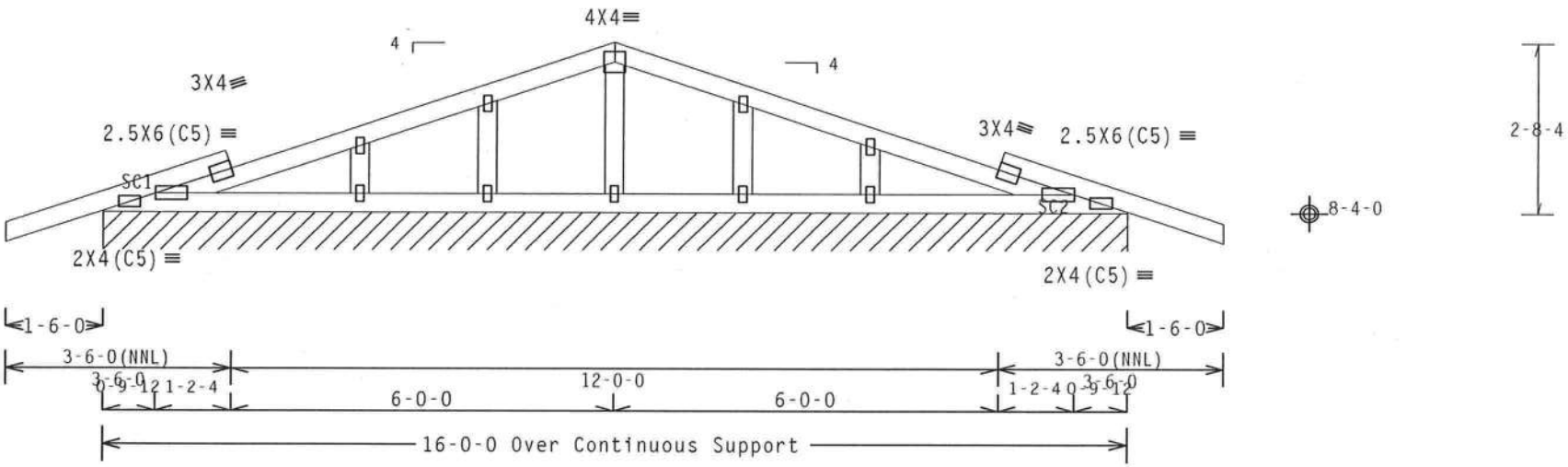

R=107 PLF U=10 PLF W=16-0-0
RL=4/-4 PLF

Note: All Plates Are 1.5X3 Except As Shown.

Design Crit: FBC2007Res/TPI-2002(STD)

PLT TYP. Wave FT/RT=10%(0%)/0(0) 9.09.03.0319.17 QTY 1 FL/-/4/-/-/R/- Scale =.375"/Ft.

ALPINE
ITW Building Components Group Inc.
Haines City, FL 33844
FL COA #0 278

WARNING READ AND FOLLOW ALL NOTES ON THIS SHEET!
IMPORTANT FURNISH THIS DESIGN TO ALL CONTRACTORS INCLUDING INSTALLERS.

Trusses require extreme care in fabricating, handling, shipping, installing and bracing. Refer to and follow the latest edition of BCSI (Building Component Safety Information, by TPI and WTCA) for safety practices prior to performing these functions. Installers shall provide temporary bracing per BCSI. Unless noted otherwise, top chord shall have properly attached structural sheathing and bottom chord shall have a properly attached rigid ceiling. Locations shown for permanent lateral restraint of webs shall have bracing installed per BCSI sections B3, B7 or B10, as applicable.

ITW Building Components Group Inc. (ITWBCG) shall not be responsible for any deviation from this design, any failure to build the truss in conformance with ANSI/TPI 1, or for handling, shipping, installing and bracing of trusses. Apply plates to each face of truss and position as shown above and on the Joint Details, unless noted otherwise. Refer to drawings 160A-2 for standard plate positions. A seal on this drawing or cover page listing this drawing, indicates acceptance of professional engineering responsibility solely for the design shown. The suitability and use of this design for any structure is the responsibility of the Building Designer per ANSI/TPI 1 Sec.2. For more information see: This job's general notes page; ITW-BCG: www.itwbcg.com; TPI: www.tpinst.org; WTCA: www.sbcindustry.com; ICC: www.iccsafe.org

DOUGLAS FLEMING LICENSE No. 66648 STATE OF FLORIDA PROFESSIONAL ENGINEER
03/24/2011

TC LL	20.0 PSF	REF R487-- 56550
TC DL	10.0 PSF	DATE 03/24/11
BC DL	10.0 PSF	DRW HCUSR487 11083021
BC LL	0.0 PSF	HC-ENG DF/DF
TOT.LD.	40.0 PSF	SEQN- 192367
DUR.FAC.	1.25	
SPACING	24.0"	JREF- 1UAI487_Z02

THIS DWG PREPARED FROM COMPUTER INPUT (LOADS & DIMENSIONS) SUBMITTED BY TRUSS MFR.

(11-059--Fill in later LANCE POUND -- , ** - C)

Top chord 2x4 SP #1
Bot chord 2x4 SP #2 Dense
Webs 2x4 SP #3

Roof overhang supports 2.00 psf soffit load.

Bottom chord checked for 10.00 psf non-concurrent live load.

Deflection meets L/240 live and L/180 total load.

110 mph wind, 15.00 ft mean hgt, ASCE 7-05, CLOSED bldg, Located anywhere in roof, CAT II, EXP B, wind TC DL=5.0 psf, wind BC DL=5.0 psf. Iw=1.00 GCpi(+/-)=0.18

Wind reactions based on MWFRS pressures.

Right end vertical not exposed to wind pressure.

Stacked top chord must NOT be notched or cut in area (NNL). Dropped top chord braced at 24" o.c. intervals. Attach stacked top chord (SC) to dropped top chord in notchable area using 3x4 tie-plates 24" o.c. Center plate on stacked/dropped chord interface, plate length perpendicular to chord length. Splice top chord in notchable area using 3x6.

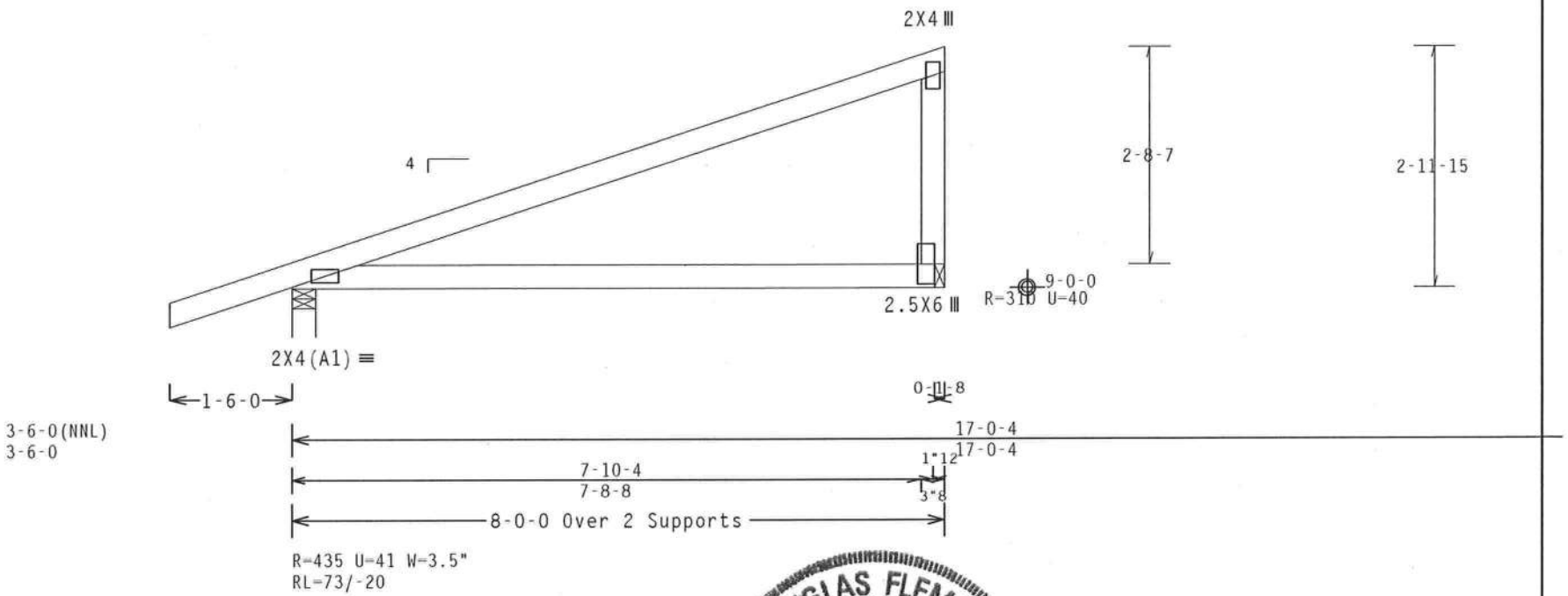

Design Crit: FBC2007Res/TPI-2002(STD)

PLT TYP. Wave FT/RT=10%(0%)/0(0) 9.05.03.0319.17 QTY:6 FL/-/4/-/-/R/- Scale =.5"/Ft.

ALPINE
ITW Building Components Group Inc.
Haines City, FL 33844
FL COA #0 278

WARNING READ AND FOLLOW ALL NOTES ON THIS SHEET!
IMPORTANT FURNISH THIS DESIGN TO ALL CONTRACTORS INCLUDING INSTALLERS.

Trusses require extreme care in fabricating, handling, shipping, installing and bracing. Refer to and follow the latest edition of BCSI (Building Component Safety Information, by TPI and WTCA) for safety practices prior to performing these functions. Installers shall provide temporary bracing per BCSI. Unless noted otherwise, top chord shall have properly attached structural sheathing and bottom chord shall have a properly attached rigid ceiling. Locations shown for permanent lateral restraint of webs shall have bracing installed per BCSI sections B3, B7 or B10, as applicable.

ITW Building Components Group Inc. (ITWBCG) shall not be responsible for any deviation from this design, any failure to build the truss in conformance with ANSI/TPI 1, or for handling, shipping, installing and bracing of trusses. Apply plates to each face of truss and position as shown above and on the Joint Details, unless noted otherwise. Refer to drawings 160A-2 for standard plate positions. A seal on this drawing or cover page listing this drawing, indicates acceptance of professional engineering responsibility solely for the design shown. The suitability and use of this design for any structure is the responsibility of the Building Designer per ANSI/TPI 1 Sec.2. For more information see: This job's general notes page; ITW-BCG: www.itwbcg.com; TPI: www.tpinst.org; WTCA: www.sbcindustry.com; ICC: www.iccsafe.org

DOUGLAS FLEMING LICENSE No. 66648 STATE OF FLORIDA PROFESSIONAL ENGINEER
03/24/2011

TC LL	20.0 PSF	REF	R487-- 56551
TC DL	10.0 PSF	DATE	03/24/11
BC DL	10.0 PSF	DRW	HCUSR487 11083013
BC LL	0.0 PSF	HC-ENG	DF/DF *
TOT.LD.	40.0 PSF	SEQN-	192370
DUR.FAC.	1.25		
SPACING	24.0"	JREF-	1UAI487_Z02

THIS DWG PREPARED FROM COMPUTER INPUT (LOADS & DIMENSIONS) SUBMITTED BY TRUSS MFR.

(11-059--Fill in later LANCE POUND -- , ** - CGE)

Top chord 2x4 SP #2 Dense
Bot chord 2x4 SP #2 Dense
Webs 2x4 SP #3
:Stack Chord SC1 2x4 SP #2 Dense:

Roof overhang supports 2.00 psf soffit load.

See DWGS A11015050109 & GBLLETIN0109 for more requirements.

Stacked top chord must NOT be notched or cut in area (NNL). Dropped top chord braced at 24" o.c. intervals. Attach stacked top chord (SC) to dropped top chord in notchable area using 3x4 tie-plates 24" o.c. Center plate on stacked/dropped chord interface, plate length perpendicular to chord length. Splice top chord in notchable area using 3x6.

110 mph wind, 15.00 ft mean hgt, ASCE 7-05, CLOSED bldg, Located anywhere in roof, CAT II, EXP B, wind TC DL=5.0 psf, wind BC DL=5.0 psf. Iw=1.00 GCpi(+/-)=0.18

Wind reactions based on MWFRS pressures.

Right end vertical not exposed to wind pressure.

Bottom chord checked for 10.00 psf non-concurrent live load.

Deflection meets L/240 live and L/180 total load.

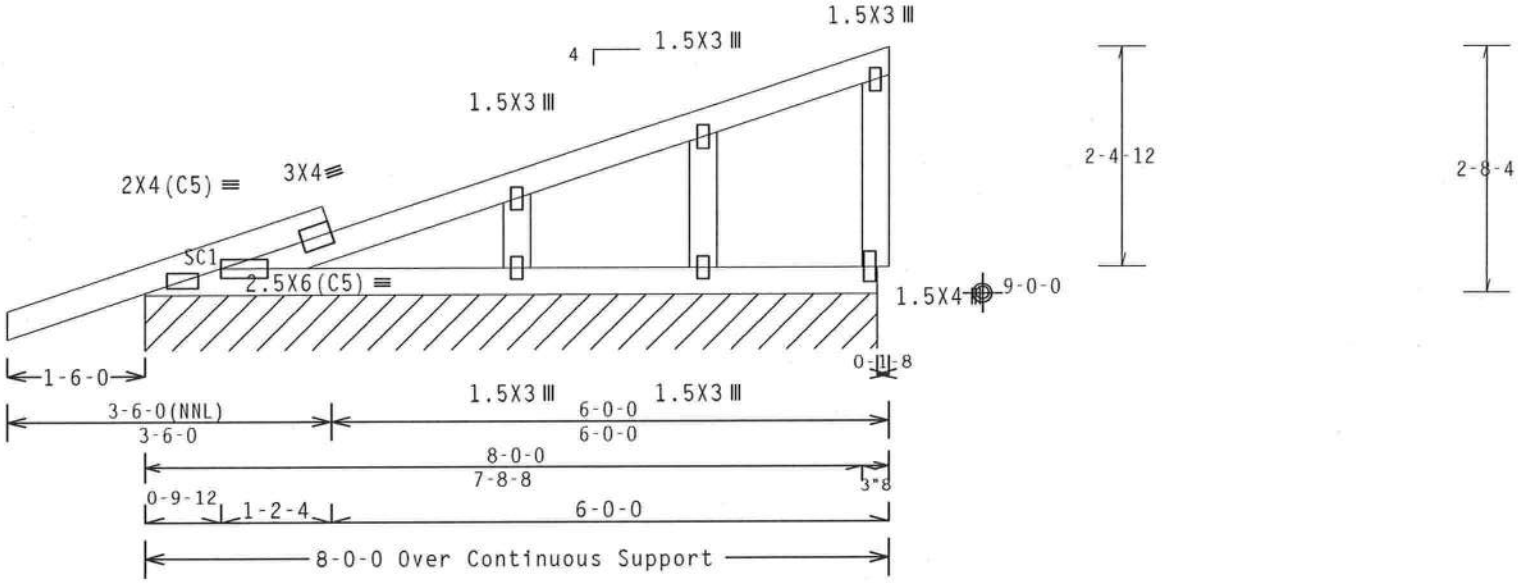

R=94 PLF U=10 PLF W=7-10-8
RL=9/-3 PLF

Design Crit: FBC2007Res/TPI-2002(STD)
FT/RT=10%(0%)/0(0)

PLT TYP. Wave

9.05.03.0319.17 QTY 2

FL/-/4/-/-/R/-

Scale =.5"/Ft.

ALPINE
ITW Building Components Group Inc.
Haines City, FL 33844
FL COA #0 278

WARNING READ AND FOLLOW ALL NOTES ON THIS SHEET!
IMPORTANT FURNISH THIS DESIGN TO ALL CONTRACTORS INCLUDING INSTALLERS.

Trusses require extreme care in fabricating, handling, shipping, installing and bracing. Refer to and follow the latest edition of BCSI (Building Component Safety Information, by TPI and WTCA) for additional practices prior to performing these functions. Installers shall provide temporary bracing per BCSI. Unless noted otherwise, top chord shall have properly attached structural sheathing and bottom chord shall have a properly attached rigid ceiling. Locations shown for permanent lateral restraint of webs shall have bracing installed per BCSI sections B3, B7 or B10, as applicable.

ITW Building Components Group Inc. (ITWBCG) shall not be responsible for any deviation from this design, any failure to build the truss in conformance with ANSI/TPI 1, or for handling, shipping, installing and bracing of trusses. Apply plates to each face of truss and position as shown above and on the Joint Details, unless noted otherwise. Refer to drawings 160A-Z for standard plate positions. A seal on this drawing or cover page listing this drawing, indicates acceptance of professional engineering responsibility solely for the design shown. The suitability and use of this design for any structure is the responsibility of the Building Designer per ANSI/TPI 1 Sec.2. For more information see: This job's general notes page; ITW-BCG: www.itwbcg.com; TPI: www.tpinst.org; WTCA: www.sbcindustry.com; ICC: www.iccsafe.org

DOUGLAS FLEMING LICENSE No. 66648 STATE OF FLORIDA PROFESSIONAL ENGINEER

03/24/2011

TC LL	20.0 PSF	REF R487-- 56552
TC DL	10.0 PSF	DATE 03/24/11
BC DL	10.0 PSF	DRW HCUSR487 11083022
BC LL	0.0 PSF	HC-ENG DF/DF
TOT.LD.	40.0 PSF	SEQN- 192373
DUR.FAC.	1.25	
SPACING	24.0"	JREF- 1UAI487_Z02

THIS DWG PREPARED FROM COMPUTER INPUT (LOADS & DIMENSIONS) SUBMITTED BY TRUSS MFR.

(11-059--Fill in later LANCE POUND -- , ** - D)

Top chord 2x4 SP #2 Dense
Bot chord 2x4 SP #2 Dense
Webs 2x4 SP #3

Roof overhang supports 2.00 psf soffit load.

Bottom chord checked for 10.00 psf non-concurrent live load.

Deflection meets L/240 live and L/180 total load.

110 mph wind, 15.00 ft mean hgt, ASCE 7-05, CLOSED bldg, Located anywhere in roof, CAT II, EXP B, wind TC DL=5.0 psf, wind BC DL=5.0 psf. Iw=1.00 GCpi(+/-)=0.18

Wind reactions based on MWFRS pressures.

Right end vertical not exposed to wind pressure.

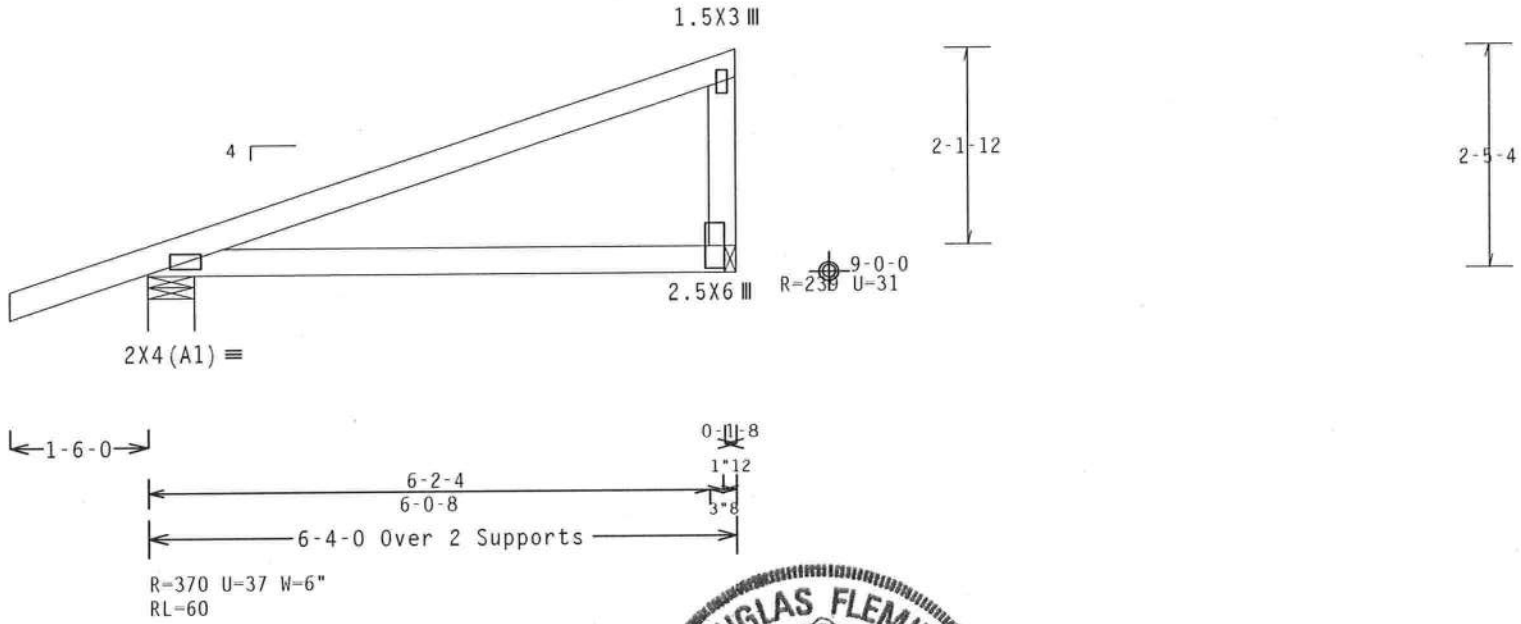

Design Crit: FBC2007Res/TPI-2002(STD)
FT/RT=10%(0%)/0(0)

PLT TYP. Wave

9.05.03.0319.17 QTY 7 FL/-/4/-/-/R/- Scale =.5"/Ft.

DOUGLAS FLEMING LICENSE No. 66648 STATE OF FLORIDA PROFESSIONAL ENGINEER

03/24/2011

ALPINE
ITW Building Components Group Inc.
Haines City, FL 33844
FL COA #0 278

WARNING READ AND FOLLOW ALL NOTES ON THIS SHEET!
IMPORTANT FURNISH THIS DESIGN TO ALL CONTRACTORS INCLUDING INSTALLERS.

Trusses require extreme care in fabricating, handling, shipping, installing and bracing. Refer to and follow the latest edition of BCSI (Building Component Safety Information, by TPI and WTCA) for safety practices prior to performing these functions. Installers shall provide temporary bracing per BCSI. Unless noted otherwise, top chord shall have properly attached structural sheathing and bottom chord shall have a properly attached rigid ceiling. Locations shown for permanent lateral restraint of webs shall have bracing installed per BCSI sections B3, B7 or B10, as applicable.

ITW Building Components Group Inc. (ITWBCG) shall not be responsible for any deviation from this design, any failure to build the truss in conformance with ANSI/TPI 1, or for handling, shipping, installing and bracing of trusses. Apply plates to each face of truss and position as shown above and on the Joint Details, unless noted otherwise. Refer to drawings 160A-2 for standard plate positions. A seal on this drawing or cover page listing this drawing, indicates acceptance of professional engineering responsibility solely for the design shown. The suitability and use of this design for any structure is the responsibility of the Building Designer per ANSI/TPI 1 Sec.2. For more information see: This job's general notes page; ITW-BCG: www.itwbcg.com; TPI: www.tpinst.org; WTCA: www.sbcindustry.com; ICC: www.iccsafe.org

TC LL	20.0 PSF	REF R487-- 56553
TC DL	10.0 PSF	DATE 03/24/11
BC DL	10.0 PSF	DRW HCUSR487 11083014
BC LL	0.0 PSF	HC-ENG DF/DF *
TOT.LD.	40.0 PSF	SEQN- 192376
DUR.FAC.	1.25	
SPACING	24.0"	JREF- 1UAI487_Z02

(11-059--Fill in later LANCE POUND -- , ** - DGE)

Top chord 2x4 SP #1
Bot chord 2x4 SP #2 Dense
Webs 2x4 SP #3
:Stack Chord SC1 2x4 SP #2 Dense:

Roof overhang supports 2.00 psf soffit load.

Stacked top chord must NOT be notched or cut in area (NNL). Dropped top chord braced at 24" o.c. intervals. Attach stacked top chord (SC) to dropped top chord in notchable area using 3x4 tie-plates 24" o.c. Center plate on stacked/dropped chord interface, plate length perpendicular to chord length. Splice top chord in notchable area using 3x6.

110 mph wind, 15.00 ft mean hgt, ASCE 7-05, CLOSED bldg, Located anywhere in roof, CAT II, EXP B, wind TC DL=5.0 psf, wind BC DL=5.0 psf. Iw=1.00 GCpi(+/-)=0.18

Wind reactions based on MWFRS pressures.

See DWGS A11015050109 & GBLLETIN0109 for more requirements.

Bottom chord checked for 10.00 psf non-concurrent live load.

Deflection meets L/240 live and L/180 total load.

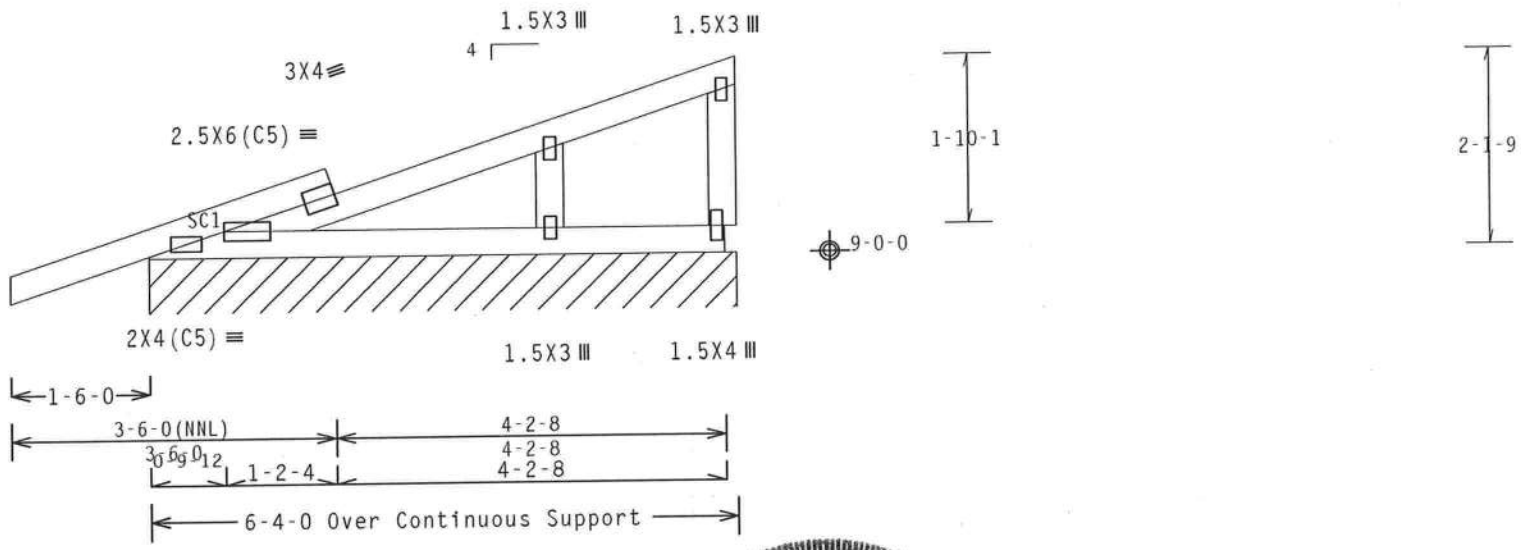

R=96 PLT U=11 PLT W=6-4-0
RL=9 PLT

Design Crit: FBC2007Res/TPI-2002(STD)
FT/RT=10%(0%)/0(0)

PLT TYP. Wave

9.05.03.0319.17 QTY:2

FL/-/4/-/-/R/-

Scale =.5"/Ft.

TC LL	20.0 PSF	REF	R487-- 56554
TC DL	10.0 PSF	DATE	03/24/11
BC DL	10.0 PSF	DRW	HCUSR487 11083015
BC LL	0.0 PSF	HC-ENG	DF/DF *
TOT.LD.	40.0 PSF	SEQN-	192379
DUR.FAC.	1.25		
SPACING	24.0"	JREF-	1UAI487_Z02

ALPINE
ITW Building Components Group Inc.
Haines City, FL 33844
FL COA #0 278

WARNING READ AND FOLLOW ALL NOTES ON THIS SHEET!
IMPORTANT FURNISH THIS DESIGN TO ALL CONTRACTORS INCLUDING INSTALLERS.

Trusses require extreme care in fabricating, handling, shipping, installing and bracing. Refer to and follow the latest edition of BCSI (Building Component Safety Information, by TPI and WTCA) for safety practices prior to performing these functions. Installers shall provide temporary bracing per BCSI. Unless noted otherwise, top chord shall have properly attached structural sheathing and bottom chord shall have a properly attached rigid ceiling. Locations shown for permanent lateral restraint of webs shall have bracing installed per BCSI sections B3, B7 or B10, as applicable.

ITW Building Components Group Inc. (ITWBCG) shall not be responsible for any deviation from this design, any failure to build the truss in conformance with ANSI/TPI 1, or for handling, shipping, installation or bracing of trusses. Apply plates to each face of truss and position as shown above and on the Joint Details, unless noted otherwise. Refer to drawings 160A-2 for standard plate positions. A seal on this drawing or cover page listing this drawing, indicates acceptance of professional engineering responsibility solely for the design shown. The suitability and use of this design for any structure is the responsibility of the Building Designer per ANSI/TPI 1 Sec.2. For more information see: This job's general notes page: ITW-BCG: www.itwbcg.com; TPI: www.tpinst.org; WTCA: www.sbcindustry.com; ICC: www.iccsafe.org

DOUGLAS FLEMING LICENSE No. 66648 STATE OF FLORIDA PROFESSIONAL ENGINEER

03/24/2011

THIS DWG PREPARED FROM COMPUTER INPUT (LOADS & DIMENSIONS) SUBMITTED BY TRUSS MFR.

(11-059--Fill in later LANCE POUND -- , ** - APGE)

Top chord 2x4 SP #2 Dense
Bot chord 2x4 SP #2 Dense
Webs 2x4 SP #3

110 mph wind, 20.01 ft mean hgt, ASCE 7-05, CLOSED bldg, Located anywhere in roof, CAT II, EXP B, wind TC DL=5.0 psf, wind BC DL=2.0 psf. Iw=1.00 GCpi(+/-)=0.18

Wind reactions based on MWFRS pressures.

Special loads
------(Lumber Dur.Fac.=1.25 / Plate Dur.Fac.=1.25)

TC- From	68 plf at	-0.56 to	68 plf at	2.46
TC- From	68 plf at	2.46 to	68 plf at	5.48
BC- From	4 plf at	-0.56 to	4 plf at	5.48

Deflection meets L/240 live and L/180 total load.

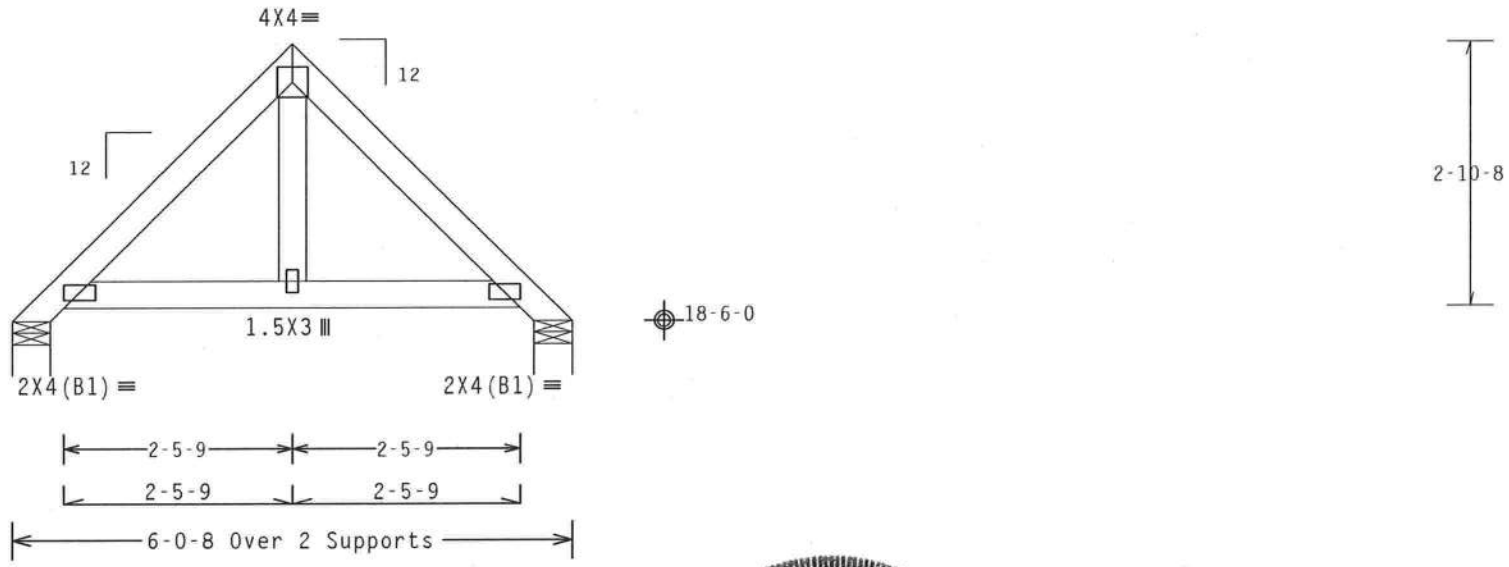

Design Crit: FBC2007Res/TPI-2002(STD)
FT/RT=10%(0%)/0(0) 9.05.03.0319.17 QTY: FL/-/4/-/-/R/- Scale =.5"/Ft.

PLT TYP. Wave

ALPINE
ITW Building Components Group Inc.
Haines City, FL 33844
FL COA #0 278

WARNING READ AND FOLLOW ALL NOTES ON THIS SHEET!
IMPORTANT FURNISH THIS DESIGN TO ALL CONTRACTORS INCLUDING INSTALLERS.

Trusses require extreme care in fabricating, handling, shipping, installing and bracing. Refer to and follow the latest edition of BCSI (Building Component Safety Information, by TPI and WTCA) for standard practices prior to performing these functions. Installers shall provide temporary bracing per BCSI. Unless noted otherwise, top chord shall have properly attached structural sheathing and bottom chord shall have a properly attached rigid ceiling. Locations shown for permanent lateral restraint of webs shall have bracing installed per BCSI sections B3, B7 or B10, as applicable.

ITW Building Components Group Inc. (ITWBCG) shall not be responsible for any deviation from this design, any failure to build the truss in conformance with ANSI/TPI 1, or for handling, shipping, installation and bracing of trusses. Apply plates to each face of truss and position as shown above and on the Joint Details, unless noted otherwise. Refer to drawings 160A-2 for standard plate positions. A seal on this drawing or cover page listing this drawing, indicates acceptance of professional engineering responsibility solely for the design shown. The suitability and use of this design for any structure is the responsibility of the Building Designer per ANSI/TPI 1 Sec.2. For more information see: This job's general notes page; ITW-BCG: www.itwbcg.com; TPI: www.tpinst.org; WTCA: www.sbcindustry.com; ICC: www.iccsafe.org

DOUGLAS FLEMING LICENSE No. 66648 STATE OF FLORIDA PROFESSIONAL ENGINEER
03/24/2011

TC LL	20.0 PSF	REF R487-- 56555
TC DL	10.0 PSF	DATE 03/24/11
BC DL	10.0 PSF	DRW HCUSR487 11083023
BC LL	0.0 PSF	HC-ENG DF/DF
TOT.LD.	40.0 PSF	SEQN- 192391
DUR.FAC.	1.25	
SPACING	24.0"	JREF- 1UAI487_Z02

(11-059--Fill in later LANCE POUND -- , ** - AP)

Top chord 2x4 SP #2 Dense
Bot chord 2x4 SP #2 Dense
Webs 2x4 SP #3

110 mph wind, 20.22 ft mean hgt, ASCE 7-05, CLOSED bldg, not located within 4.50 ft from roof edge, CAT II, EXP B, wind TC DL=5.0 psf, wind BC DL=2.0 psf. Iw=1.00 GCpi(+/-)=0.18

Wind reactions based on MWFRS pressures.

Refer to DWG PB1200109 for piggyback details.

Special loads
------(Lumber Dur.Fac.=1.25 / Plate Dur.Fac.=1.25)

TC- From	68 plf at	0.00 to	68 plf at	3.43
TC- From	68 plf at	3.43 to	68 plf at	6.87
BC- From	4 plf at	0.00 to	4 plf at	6.87

Deflection meets L/240 live and L/180 total load.

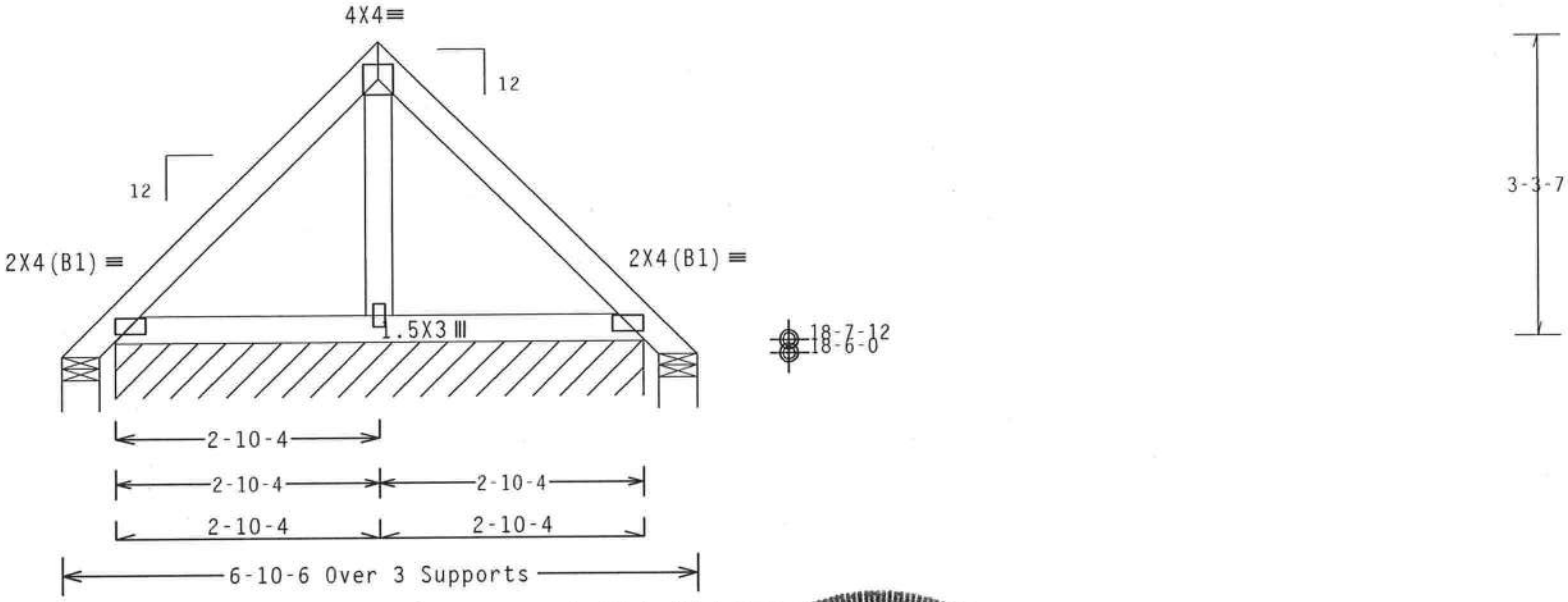

R=-28 Rw=97 U=100 W=4.95"
RL=87 R=-87 PLF U=29 PLF W=5-8-8

R=-28 Rw=31 U=33 W=4.95"

Design Crit: FBC2007Res/TPI-2002(STD)
FT/RT=10%(0%)/0(0)

PLT TYP. Wave

9.05.03.0319.17 QTY: FL/-/4/-/-/R/- Scale =.5"/Ft.

ALPINE
ITW Building Components Group Inc.
Haines City, FL 33844
FL COA #0278

WARNING READ AND FOLLOW ALL NOTES ON THIS SHEET!
IMPORTANT FURNISH THIS DESIGN TO ALL CONTRACTORS INCLUDING INSTALLERS.

Trusses require extreme care in fabricating, handling, shipping, installing and bracing. Refer to and follow the latest edition of BCSI (Building Component Safety Information, by TPI and WTCA) for general practices prior to performing these functions. Installers shall provide temporary bracing per BCSI. Unless noted otherwise, top chord shall have properly attached structural sheathing and bottom chord shall have a properly attached rigid ceiling. Locations shown for permanent lateral restraint of webs shall have bracing installed per BCSI sections B3, B7 or B10, as applicable.

ITW Building Components Group Inc. (ITWBCG) shall not be responsible for any deviation from this design, any failure to build the truss in conformance with ANSI/TPI 1, or for handling, shipping, installation and bracing of trusses. Apply plates to each face of truss and position as shown above and on the Joint Details, unless noted otherwise. Refer to drawings 160A-Z for standard plate positions. A seal on this drawing or cover page listing this drawing, indicates acceptance of professional engineering responsibility solely for the design shown. The suitability and use of this design for any structure is the responsibility of the Building Designer per ANSI/TPI 1 Sec.2. For more information see: This job's general notes page; ITW-BCG: www.itwbcg.com; TPI: www.tpinst.org; WTCA: www.sbcindustry.com; ICC: www.iccsafe.org

DOUGLAS FLEMING LICENSE No.66648 STATE OF FLORIDA PROFESSIONAL ENGINEER
03/24/2011

TC LL	20.0 PSF	REF R487-- 56556
TC DL	10.0 PSF	DATE 03/24/11
BC DL	10.0 PSF	DRW HCUSR487 11083024
BC LL	0.0 PSF	HC-ENG DF/DF
TOT.LD.	40.0 PSF	SEQN- 192388
DUR.FAC.	1.25	
SPACING	24.0"	JREF- 1UAI487_Z02

CLB WEB BRACE SUBSTITUTION

THIS DETAIL IS TO BE USED WHEN CONTINUOUS LATERAL BRACING (CLB) IS SPECIFIED ON A TRUSS DESIGN BUT AN ALTERNATIVE WEB BRACING METHOD IS DESIRED.

NOTES:

THIS DETAIL IS ONLY APPLICABLE FOR CHANGING THE SPECIFIED CLB SHOWN ON SINGLE PLY SEALED DESIGNS TO T-BRACING OR SCAB BRACING.

ALTERNATIVE BRACING SPECIFIED IN CHART BELOW MAY BE CONSERVATIVE. FOR MINIMUM ALTERNATIVE BRACING, RE-RUN DESIGN WITH APPROPRIATE BRACING.

WEB MEMBER SIZE	SPECIFIED CLB BRACING	ALTERNATIVE BRACING T OR L-BRACE	ALTERNATIVE BRACING SCAB BRACE
2X3 OR 2X4	1 ROW	2X4	1-2X4
2X3 OR 2X4	2 ROWS	2X6	2-2X4
2X6	1 ROW	2X4	1-2X6
2X6	2 ROWS	2X6	2-2X4(*)
2X8	1 ROW	2X6	1-2X8
2X8	2 ROWS	2X6	2-2X6(*)

T-BRACE, L-BRACE AND SCAB BRACE TO BE SAME SPECIES AND GRADE OR BETTER THAN WEB MEMBER UNLESS SPECIFIED OTHERWISE ON ENGINEER'S SEALED DESIGN.

(*) CENTER SCAB ON WIDE FACE OF WEB. APPLY (1) SCAB TO EACH FACE OF WEB.

T-BRACING OR L-BRACING:

APPLY TO EITHER SIDE OF WEB NARROW FACE.
ATTACH WITH 10d BOX OR GUN (0.128"x 3.",MIN) NAILS.
AT 6" O.C.
BRACE IS A MINIMUM 80% OF WEB MEMBER LENGTH

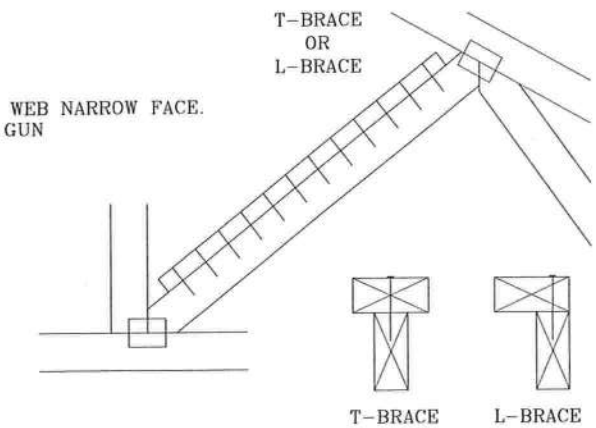

SCAB BRACING:

APPLY SCAB(S) TO WIDE FACE OF WEB.
NO MORE THAN (1) SCAB PER FACE.
ATTACH WITH 10d BOX OR GUN (0.128"x 3.",MIN) NAILS.
AT 6" O.C.
BRACE IS A MINIMUM 80% OF WEB MEMBER LENGTH

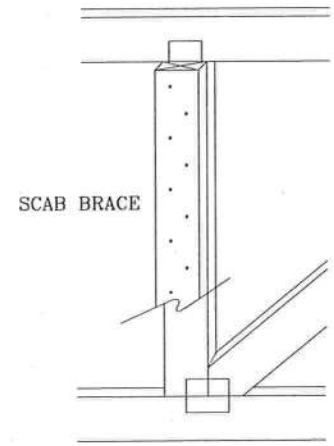

ITW Building Components Group Inc.
Earth City, MO 63045

WARNING READ AND FOLLOW ALL NOTES ON THIS SHEET!
Trusses require extreme care in fabricating, handling, shipping, installing and bracing. Refer to and follow BCSI (Building Component Safety Information, by TPI and WTCA) for safety practices prior to performing these functions. Installers shall provide temporary bracing per BCSI. Unless noted otherwise, top chord shall have properly attached structural panels and bottom chord shall have a properly attached rigid ceiling. Locations shown for permanent lateral restraint of webs shall have bracing installed per BCSI sections B3 & B7. See this job's general notes page for more information.

IMPORTANT FURNISH COPY OF THIS DESIGN TO INSTALLATION CONTRACTOR.
ITW Building Components Group Inc. (ITWBCG) shall not be responsible for any deviation from this design, any failure to build the truss in conformance with TPI, or fabricating, handling, shipping, installing and bracing of trusses. ITWBCG connector plates are made of 20/18/16GA (W,H/S/K) ASTM A653 grade 37/40/60 (K/W/H,S) galv. steel. Apply plates to each face of truss, positioned as shown above and on Joint Details. A seal on this drawing or cover page indicates acceptance and professional engineering responsibility solely for the truss component design shown. The suitability and use of this component for any building is the responsibility of the Building Designer per ANST/TPI 1 Sec. 2.
ITW-BCG: www.itwbcg.com; TPI: www.tpinst.com; WTCA: www.sbcindustry.com; ICC: www.iccsafe.org

DOUGLAS FLEMING LICENSE No. 66648 STATE OF FLORIDA PROFESSIONAL ENGINEER
03/24/2011

TC LL	PSF	REF	CLB SUBST.
TC DL	PSF	DATE	1/1/09
BC DL	PSF	DRWG	BRCLBSUB0109
BC LL	PSF		
TOT. LD.	PSF		
DUR. FAC.			
SPACING			

GABLE STUD REINFORCEMENT DETAIL

ASCE 7-05: 110 MPH WIND SPEED, 30' MEAN HEIGHT, ENCLOSED, I = 1.00, EXPOSURE C, Kzt = 1.00

MAX GABLE VERTICAL LENGTH

2X4 GABLE VERTICAL SPACING	SPECIES	BRACE / GRADE	NO BRACES	(1) 1X4 "L" BRACE *		(1) 2X4 "L" BRACE *		(2) 2X4 "L" BRACE **		(1) 2X6 "L" BRACE *		(2) 2X6 "L" BRACE **	
				GROUP A	GROUP B	GROUP A	GROUP B	GROUP A	GROUP B	GROUP A	GROUP B	GROUP A	GROUP B
24" O.C.	SPF HF	#1 / #2	3' 8"	6' 4"	6' 6"	7' 6"	7' 8"	8' 11"	9' 2"	11' 9"	12' 1"	14' 0"	14' 0"
		#3	3' 7"	5' 5"	5' 5"	7' 2"	7' 2"	8' 11"	8' 11"	11' 2"	11' 2"	14' 0"	14' 0"
		STUD	3' 7"	5' 5"	5' 5"	7' 1"	7' 1"	8' 11"	8' 11"	11' 1"	11' 1"	14' 0"	14' 0"
		STANDARD	3' 7"	4' 8"	4' 8"	6' 1"	6' 1"	8' 3"	8' 3"	9' 6"	9' 6"	12' 11"	12' 11"
	SP DFL	#1	4' 0"	6' 4"	6' 10"	7' 6"	8' 1"	8' 11"	9' 7"	11' 9"	12' 8"	14' 0"	14' 0"
		#2	3' 11"	6' 4"	6' 10"	7' 6"	8' 1"	8' 11"	9' 7"	11' 9"	12' 8"	14' 0"	14' 0"
		#3	3' 9"	5' 7"	5' 7"	7' 4"	7' 4"	8' 11"	9' 5"	11' 5"	11' 5"	14' 0"	14' 0"
		STUD	3' 9"	5' 6"	5' 6"	7' 3"	7' 3"	8' 11"	9' 5"	11' 4"	11' 4"	14' 0"	14' 0"
		STANDARD	3' 8"	4' 9"	4' 9"	6' 3"	6' 3"	8' 5"	8' 5"	9' 9"	9' 9"	13' 3"	14' 0"
16" O.C.	SPF HF	#1 / #2	4' 2"	7' 3"	7' 5"	8' 7"	8' 10"	10' 3"	10' 6"	13' 5"	13' 10"	14' 0"	14' 0"
		#3	4' 1"	6' 8"	6' 8"	8' 7"	8' 7"	10' 3"	10' 3"	13' 5"	13' 5"	14' 0"	14' 0"
		STUD	4' 1"	8' 0"	8' 0"	8' 7"	8' 7"	10' 3"	10' 3"	13' 5"	13' 5"	14' 0"	14' 0"
		STANDARD	4' 1"	5' 8"	5' 8"	7' 6"	7' 6"	10' 1"	10' 1"	11' 8"	11' 8"	14' 0"	14' 0"
	SP DFL	#1	4' 7"	7' 3"	7' 9"	8' 7"	9' 3"	10' 3"	11' 0"	13' 5"	14' 0"	14' 0"	14' 0"
		#2	4' 6"	7' 3"	7' 9"	8' 7"	9' 3"	10' 3"	11' 0"	13' 5"	14' 0"	14' 0"	14' 0"
		#3	4' 4"	6' 10"	6' 10"	8' 7"	9' 0"	10' 3"	10' 9"	13' 5"	14' 0"	14' 0"	14' 0"
		STUD	4' 4"	6' 9"	6' 9"	8' 7"	8' 11"	10' 3"	10' 9"	13' 5"	14' 0"	14' 0"	14' 0"
		STANDARD	4' 2"	5' 10"	5' 10"	7' 8"	7' 8"	10' 3"	10' 4"	11' 11"	11' 11"	14' 0"	14' 0"
12" O.C.	SPF HF	#1 / #2	4' 7"	8' 0"	8' 2"	9' 5"	9' 8"	11' 3"	11' 7"	14' 0"	14' 0"	14' 0"	14' 0"
		#3	4' 6"	7' 8"	7' 8"	9' 5"	9' 5"	11' 3"	11' 3"	14' 0"	14' 0"	14' 0"	14' 0"
		STUD	4' 6"	7' 8"	7' 8"	9' 5"	9' 5"	11' 3"	11' 3"	14' 0"	14' 0"	14' 0"	14' 0"
		STANDARD	4' 6"	6' 7"	6' 7"	8' 8"	8' 8"	11' 3"	11' 3"	13' 6"	13' 6"	14' 0"	14' 0"
	SP DFL	#1	5' 1"	8' 0"	8' 7"	9' 5"	10' 2"	11' 3"	12' 1"	14' 0"	14' 0"	14' 0"	14' 0"
		#2	4' 11"	8' 0"	8' 7"	9' 5"	10' 2"	11' 3"	12' 1"	14' 0"	14' 0"	14' 0"	14' 0"
		#3	4' 9"	7' 11"	7' 11"	9' 5"	9' 11"	11' 3"	11' 10"	14' 0"	14' 0"	14' 0"	14' 0"
		STUD	4' 9"	7' 9"	7' 9"	9' 5"	9' 11"	11' 3"	11' 10"	14' 0"	14' 0"	14' 0"	14' 0"
		STANDARD	4' 7"	6' 9"	6' 9"	8' 10"	8' 10"	11' 3"	11' 7"	13' 10"	13' 10"	14' 0"	14' 0"

BRACING GROUP SPECIES AND GRADES:

GROUP A:

SPRUCE-PINE-FIR

#1 / #2	STANDARD
#3	STUD

HEM-FIR

#2	STUD
#3	STANDARD

DOUGLAS FIR-LARCH

#3
STUD
STANDARD

SOUTHERN PINE

#3
STUD
STANDARD

GROUP B:

HEM-FIR

#1 & BTR
#1

SOUTHERN PINE

#1
#2

DOUGLAS FIR-LARCH

#1
#2

GABLE TRUSS DETAIL NOTES:

LIVE LOAD DEFLECTION CRITERIA IS L/240.

PROVIDE UPLIFT CONNECTIONS FOR 100 PLF OVER CONTINUOUS BEARING (5 PSF TC DEAD LOAD).

GABLE END SUPPORTS LOAD FROM 4' 0" OUTLOOKERS WITH 2' 0" OVERHANG, OR 12" PLYWOOD OVERHANG.

ATTACH EACH "L" BRACE WITH 10d NAILS. (0.128"x3" min)

* FOR (1) "L" BRACE: SPACE NAILS AT 2" O.C. IN 18" END ZONES AND 4" O.C. BETWEEN ZONES.

** FOR (2) "L" BRACES: SPACE NAILS AT 3" O.C. IN 18" END ZONES AND 6" O.C. BETWEEN ZONES.

"L" BRACING MUST BE A MINIMUM OF 80% OF WEB MEMBER LENGTH.

DIAGONAL BRACE OPTION: VERTICAL LENGTH MAY BE DOUBLED WHEN DIAGONAL BRACE IS USED. CONNECT DIAGONAL BRACE FOR 700# AT EACH END. MAX WEB TOTAL LENGTH IS 14'.

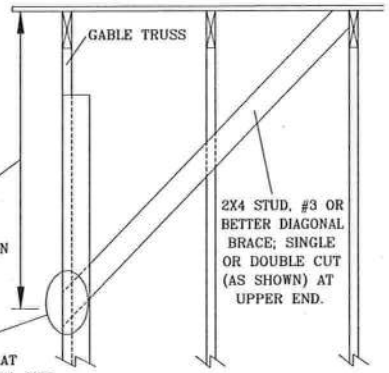

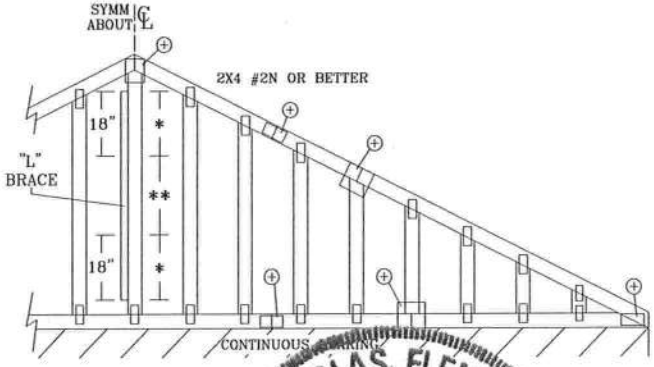

REFER TO CHART ABOVE FOR MAXIMUM GABLE VERTICAL LENGTH.

GABLE VERTICAL PLATE SIZES

VERTICAL LENGTH	NO SPLICE
LESS THAN 4' 0"	1X4 OR 2X3
GREATER THAN 4' 0", BUT LESS THAN 11' 6"	2.5X4
GREATER THAN 11' 6"	3X4

\+ REFER TO COMMON TRUSS DESIGN FOR PEAK, SPLICE, AND HEEL PLATES.

ITW Building Components Group Inc.

Earth City, MO 63045

WARNING READ AND FOLLOW ALL NOTES ON THIS SHEET!
Trusses require extreme care in fabricating, handling, shipping, installing and bracing. Refer to and follow BCSI (Building Component Safety Information, by TPI and WTCA) for safety practices prior to performing these functions. Installers shall provide temporary bracing per BCSI. Unless noted otherwise, top chord shall have properly attached structural panels and bottom chord shall have a properly attached rigid ceiling. Locations shown for permanent lateral restraint of webs shall have bracing installed per BCSI sections B3 & B7. See this job's general notes page for more information.

IMPORTANT FURNISH COPY OF THIS DESIGN TO INSTALLATION CONTRACTOR.
ITW Building Components Group Inc. (ITWBCG) shall not be responsible for any deviation from this design, any failure to build the truss in conformance with TPI, or fabricating, handling, shipping, installing & bracing of trusses. ITWBCG connector plates are made of 20/18/16GA (W,H/S/K) ASTM A653 grade 37/40/50 (K/W/H,S) galv. steel. Apply plates to each face of truss, positioned as shown above and on Joint Details. A seal on this drawing or cover page indicates acceptance and professional engineering responsibility solely for the truss component design shown. The suitability and use of this component for any building is the responsibility of the Building Designer per ANST/TPI 1 Sec. 2.
ITW-BCG: www.itwbcg.com; TPI: www.tpinst.com; WTCA: www.sbcindustry.com; ICC: www.iccsafe.org

DOUGLAS FLEMING LICENSE No. 66648 STATE OF FLORIDA PROFESSIONAL ENGINEER
Mar 24 2011
03/24/2011

MAX. TOT. LD. 60 PSF

MAX. SPACING 24.0"

REF ASCE7-05-GABI1030
DATE 1/1/09
DRWG A11030050109

GABLE DETAIL
FOR LET-IN VERTICALS

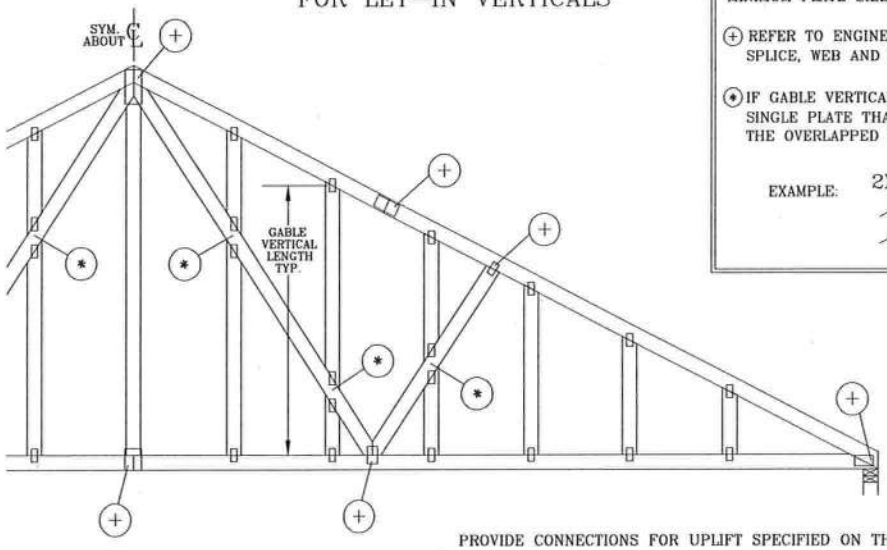

GABLE TRUSS PLATE SIZES

REFER TO APPROPRIATE ITW GABLE DETAIL FOR MINIMUM PLATE SIZES FOR VERTICAL STUDS.

(+) REFER TO ENGINEERED TRUSS DESIGN FOR PEAK, SPLICE, WEB AND HEEL PLATES.

(*) IF GABLE VERTICAL PLATES OVERLAP, USE A SINGLE PLATE THAT COVERS THE TOTAL AREA OF THE OVERLAPPED PLATES TO SPAN THE WEB.

EXAMPLE:

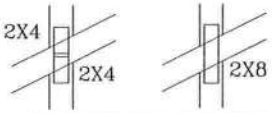

"T" REINFORCEMENT ATTACHMENT DETAIL

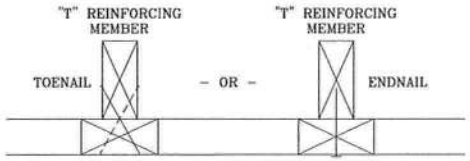

TO CONVERT FROM "L" TO "T" REINFORCING MEMBERS, MULTIPLY "T" INCREASE BY LENGTH (BASED ON APPROPRIATE ITW GABLE DETAIL).

MAXIMUM ALLOWABLE "T" REINFORCED GABLE VERTICAL LENGTH IS 14' FROM TOP TO BOTTOM CHORD.

WEB LENGTH INCREASE W/ "T" BRACE

WIND SPEED AND MRH	"T" REINF. MBR. SIZE	"T" INCREASE
140 MPH	2x4	10 %
15 FT	2x6	50 %
140 MPH	2x4	10 %
30 FT	2x6	50 %
130 MPH	2x4	10 %
15 FT	2x6	50 %
130 MPH	2x4	10 %
30 FT	2x6	50 %
120 MPH	2x4	10 %
15 FT	2x6	50 %
120 MPH	2x4	10 %
30 FT	2x6	40 %
110 MPH	2x4	10 %
15 FT	2x6	40 %
110 MPH	2x4	10 %
30 FT	2x6	50 %
100 MPH	2x4	20 %
15 FT	2x6	30 %
100 MPH	2x4	10 %
30 FT	2x6	40 %
90 MPH	2x4	20 %
15 FT	2x6	20 %
90 MPH	2x4	20 %
30 FT	2x6	30 %

EXAMPLE:
ASCE WIND SPEED = 100 MPH
MEAN ROOF HEIGHT = 30 FT, Kzt = 1.00
GABLE VERTICAL = 24" O.C. SP #3
"T" REINFORCING MEMBER SIZE = 2X4
"T" BRACE INCREASE (FROM ABOVE) = 10% = 1.10
(1) 2X4 "L" BRACE LENGTH = 6' 7"
MAXIMUM "T" REINFORCED GABLE VERTICAL LENGTH
1.10 x 6' 7" = 7' 3"

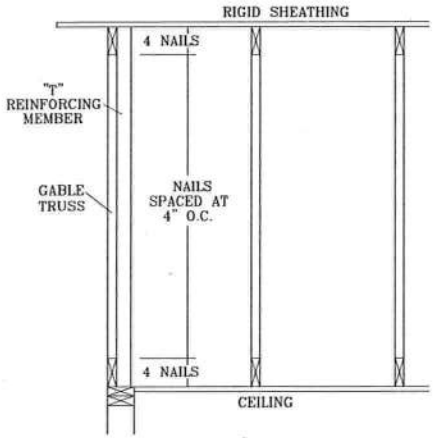

PROVIDE CONNECTIONS FOR UPLIFT SPECIFIED ON THE ENGINEERED TRUSS DESIGN.

ATTACH EACH "T" REINFORCING MEMBER WITH
END DRIVEN NAILS:
10d COMMON (0.148"X 3.",MIN) NAILS AT 4" O.C. PLUS
(4) NAILS IN TOP AND BOTTOM CHORD.

TOENAILED NAILS:
10d COMMON (0.148"x3",MIN) TOENAILS AT 4" O.C. PLUS
(4) TOENAILS IN TOP AND BOTTOM CHORD.

THIS DETAIL TO BE USED WITH THE APPROPRIATE ITW GABLE DETAIL FOR ASCE WIND LOAD.
ASCE 7-98 GABLE DETAIL DRAWINGS
A13015980109, A12015980109, A11015980109, A10015980109,
A13030980109, A12030980109, A11030980109, A10030980109
ASCE 7-02 GABLE DETAIL DRAWINGS
A13015020109, A12015020109, A11015020109, A10015020109, A14015020109,
A13030020109, A12030020109, A11030020109, A10030020109, A14030020109
ASCE 7-05 GABLE DETAIL DRAWINGS
A13015050109, A12015050109, A11015050109, A10015050109, A14015050109,
A13030050109, A12030050109, A11030050109, A10030050109, A14030050109

SEE APPROPRIATE ITW GABLE DETAIL FOR MAXIMUM UNREINFORCED GABLE VERTICAL LENGTH.

ITW
Building Components Group Inc.

Earth City, MO 63045

WARNING READ AND FOLLOW ALL NOTES ON THIS SHEET!
Trusses require extreme care in fabricating, handling, shipping, installing and bracing. Refer to and follow BCSI (Building Component Safety Information, by TPI and WTCA) for safety practices prior to performing these functions. Installers shall provide temporary bracing per BCSI. Unless noted otherwise, top chord shall have properly attached structural panels and bottom chord shall have a properly attached rigid ceiling. Locations shown for permanent lateral restraint of webs shall have bracing installed per BCSI sections B3 & B7. See this job's general notes page for more information.

IMPORTANT FURNISH COPY OF THIS DESIGN TO INSTALLATION CONTRACTOR.
ITW Building Components Group Inc. (ITWBCG) shall not be responsible for any deviation from this design, any failure to build the truss in conformance with TPI, or fabricating, handling, shipping, installing and bracing of trusses. ITWBCG connector plates are made of 20/18/16GA (W,H/S/K) ASTM A653 grade 37/40/50 (K/W/H,S) galv. steel. Apply plates to each face of truss, positioned as shown above and on Joint Details. A seal on this drawing or cover page indicates acceptance and professional engineering responsibility solely for the truss component design shown. The suitability and use of this component for any building is the responsibility of the Building Designer per ANST/TPI 1 Sec. 2.
ITW-BCG: www.itwbcg.com; TPI: www.tpinst.com; WTCA: www.sbcindustry.com; ICC: www.iccsafe.org

DOUGLAS FLEMING LICENSE No. 66648 STATE OF FLORIDA PROFESSIONAL ENGINEER
03/24/2011

MAX TOT. LD. 60 PSF
DUR. FAC. ANY
MAX SPACING 24.0"

REF	LET-IN VERT
DATE	1/1/09
DRWG	GBLLETIN0109

GABLE STUD REINFORCEMENT DETAIL

ASCE 7-05: 110 MPH WIND SPEED, 15' MEAN HEIGHT, ENCLOSED, I = 1.00, EXPOSURE C, Kzt = 1.00

MAX GABLE VERTICAL LENGTH

2X4 GABLE VERTICAL SPACING	SPECIES	BRACE / GRADE	NO BRACES	(1) 1X4 "L" BRACE * GROUP A	(1) 1X4 "L" BRACE * GROUP B	(1) 2X4 "L" BRACE * GROUP A	(1) 2X4 "L" BRACE * GROUP B	(2) 2X4 "L" BRACE ** GROUP A	(2) 2X4 "L" BRACE ** GROUP B	(1) 2X6 "L" BRACE * GROUP A	(1) 2X6 "L" BRACE * GROUP B	(2) 2X6 "L" BRACE ** GROUP A	(2) 2X6 "L" BRACE ** GROUP B
24" O.C.	SPF HF	#1 / #2	3' 10"	6' 8"	6' 10"	7' 11"	8' 1"	9' 5"	9' 8"	12' 5"	12' 9"	14' 0"	14' 0"
		#3	3' 9"	6' 0"	6' 0"	7' 11"	7' 11"	9' 5"	9' 5"	12' 4"	12' 4"	14' 0"	14' 0"
		STUD	3' 9"	6' 0"	6' 0"	7' 11"	7' 11"	9' 5"	9' 5"	12' 3"	12' 3"	14' 0"	14' 0"
		STANDARD	3' 9"	5' 2"	5' 2"	6' 9"	6' 9"	9' 1"	9' 1"	10' 7"	10' 7"	14' 0"	14' 0"
	SP DFL	#1	4' 3"	6' 8"	7' 2"	7' 11"	8' 6"	9' 5"	10' 2"	12' 5"	13' 5"	14' 0"	14' 0"
		#2	4' 2"	6' 8"	7' 2"	7' 11"	8' 6"	9' 5"	10' 2"	12' 5"	13' 5"	14' 0"	14' 0"
		#3	4' 0"	6' 2"	6' 2"	7' 11"	8' 1"	9' 5"	9' 11"	12' 5"	12' 8"	14' 0"	14' 0"
		STUD	4' 0"	6' 1"	6' 1"	7' 11"	8' 0"	9' 5"	9' 11"	12' 5"	12' 6"	14' 0"	14' 0"
		STANDARD	3' 10"	5' 3"	5' 3"	6' 11"	6' 11"	9' 4"	9' 4"	10' 10"	10' 10"	14' 0"	14' 0"
16" O.C.	SPF HF	#1 / #2	4' 5"	7' 8"	7' 10"	9' 1"	9' 4"	10' 10"	11' 1"	14' 0"	14' 0"	14' 0"	14' 0"
		#3	4' 4"	7' 4"	7' 4"	9' 1"	9' 1"	10' 10"	10' 10"	14' 0"	14' 0"	14' 0"	14' 0"
		STUD	4' 4"	7' 4"	7' 4"	9' 1"	9' 1"	10' 10"	10' 10"	14' 0"	14' 0"	14' 0"	14' 0"
		STANDARD	4' 4"	6' 4"	6' 4"	8' 4"	8' 4"	10' 10"	10' 10"	12' 11"	12' 11"	14' 0"	14' 0"
	SP DFL	#1	4' 10"	7' 8"	8' 3"	9' 1"	9' 9"	10' 10"	11' 8"	14' 0"	14' 0"	14' 0"	14' 0"
		#2	4' 9"	7' 8"	8' 3"	9' 1"	9' 9"	10' 10"	11' 8"	14' 0"	14' 0"	14' 0"	14' 0"
		#3	4' 6"	7' 7"	7' 7"	9' 1"	9' 6"	10' 10"	11' 4"	14' 0"	14' 0"	14' 0"	14' 0"
		STUD	4' 6"	7' 6"	7' 6"	9' 1"	9' 6"	10' 10"	11' 4"	14' 0"	14' 0"	14' 0"	14' 0"
		STANDARD	4' 5"	6' 5"	6' 5"	8' 6"	8' 6"	10' 10"	11' 1"	13' 3"	13' 3"	14' 0"	14' 0"
12" O.C.	SPF HF	#1 / #2	4' 11"	8' 5"	8' 8"	10' 0"	10' 3"	11' 11"	12' 3"	14' 0"	14' 0"	14' 0"	14' 0"
		#3	4' 9"	8' 5"	8' 5"	10' 0"	10' 0"	11' 11"	11' 11"	14' 0"	14' 0"	14' 0"	14' 0"
		STUD	4' 9"	8' 5"	8' 5"	10' 0"	10' 0"	11' 11"	11' 11"	14' 0"	14' 0"	14' 0"	14' 0"
		STANDARD	4' 9"	7' 3"	7' 3"	9' 7"	9' 7"	11' 11"	11' 11"	14' 0"	14' 0"	14' 0"	14' 0"
	SP DFL	#1	5' 4"	8' 5"	9' 1"	10' 0"	10' 9"	11' 11"	12' 10"	14' 0"	14' 0"	14' 0"	14' 0"
		#2	5' 3"	8' 5"	9' 1"	10' 0"	10' 9"	11' 11"	12' 10"	14' 0"	14' 0"	14' 0"	14' 0"
		#3	5' 0"	8' 5"	8' 5"	10' 0"	10' 6"	11' 11"	12' 6"	14' 0"	14' 0"	14' 0"	14' 0"
		STUD	5' 0"	8' 5"	8' 7"	10' 0"	10' 6"	11' 11"	12' 6"	14' 0"	14' 0"	14' 0"	14' 0"
		STANDARD	4' 11"	7' 5"	7' 5"	9' 10"	9' 10"	11' 11"	12' 3"	14' 0"	14' 0"	14' 0"	14' 0"

BRACING GROUP SPECIES AND GRADES:

GROUP A:

SPRUCE-PINE-FIR

#1 / #2	STANDARD
#3	STUD

HEM-FIR

#2	STUD
#3	STANDARD

DOUGLAS FIR-LARCH

#3
STUD
STANDARD

SOUTHERN PINE

#3
STUD
STANDARD

GROUP B:

HEM-FIR

#1 & BTR
#1

SOUTHERN PINE

#1
#2

DOUGLAS FIR-LARCH

#1
#2

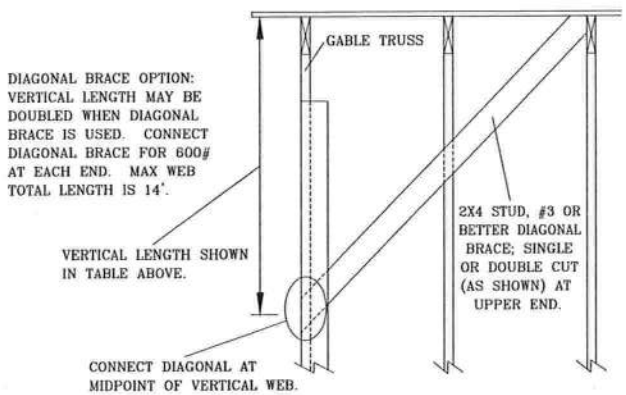

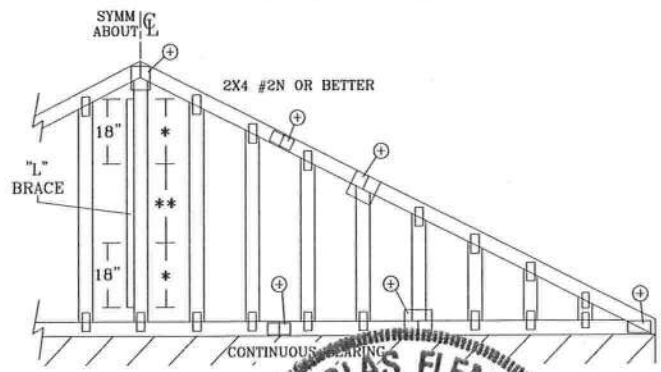

REFER TO CHART ABOVE FOR MAX GABLE VERTICAL LENGTH.

GABLE TRUSS DETAIL NOTES:

LIVE LOAD DEFLECTION CRITERIA IS L/240.

PROVIDE UPLIFT CONNECTIONS FOR 80 PLF OVER CONTINUOUS BEARING (5 PSF TC DEAD LOAD).

GABLE END SUPPORTS LOAD FROM 4' 0" OUTLOOKERS WITH 2' 0" OVERHANG, OR 12" PLYWOOD OVERHANG.

ATTACH EACH "L" BRACE WITH 10d NAILS. (0.128"x3" min)

* FOR (1) "L" BRACE: SPACE NAILS AT 2" O.C. IN 18" END ZONES AND 4" O.C. BETWEEN ZONES.

** FOR (2) "L" BRACES: SPACE NAILS AT 3" O.C. IN 18" END ZONES AND 6" O.C. BETWEEN ZONES.

"L" BRACING MUST BE A MINIMUM OF 80% OF WEB MEMBER LENGTH.

GABLE VERTICAL PLATE SIZES

VERTICAL LENGTH	NO SPLICE
LESS THAN 4' 0"	1X4 OR 2X3
GREATER THAN 4' 0", BUT LESS THAN 11' 6"	2.5X4
GREATER THAN 11' 6"	3X4

+ REFER TO COMMON TRUSS DESIGN FOR PEAK, SPLICE, AND HEEL PLATES.

ITW Building Components Group Inc.

Earth City, MO 63045

WARNING READ AND FOLLOW ALL NOTES ON THIS SHEET!
Trusses require extreme care in fabricating, handling, shipping, installing and bracing. Refer to and follow BCSI (Building Component Safety Information, by TPI and WTCA) for safety practices prior to performing these functions. Installers shall provide temporary bracing per BCSI. Unless noted otherwise, top chord shall have properly attached structural panels and bottom chord shall have a properly attached rigid ceiling. Locations shown for permanent lateral restraint of webs shall have bracing installed per BCSI sections B3 & B7. See this job's general notes page for more information.

IMPORTANT FURNISH COPY OF THIS DESIGN TO INSTALLATION CONTRACTOR.
ITW Building Components Group Inc. (ITWBCG) shall not be responsible for any deviation from this design, any failure to build the truss in conformance with TPI, or fabricating, handling, shipping, installing & bracing of trusses. ITWBCG connector plates are made of 20/18/16GA (W,H/S/K) ASTM A653 grade 33/40/50 (K/W/H,S) galv. steel. Apply plates to each face of truss, positioned as shown above and on Joint Details. A seal on this drawing or cover page indicates acceptance and professional engineering responsibility solely for the truss component design shown. The suitability and use of this component for any building is the responsibility of the Building Designer per ANST/TPI 1 Sec. 2.
ITW-BCG: www.itwbcg.com; TPI: www.tpinst.com; WTCA: www.sbcindustry.com; ICC: www.iccsafe.org

DOUGLAS FLEMING LICENSE No. 66648 STATE OF FLORIDA PROFESSIONAL ENGINEER
Mar 24, 2011 03/24/2011

MAX. TOT. LD. 60 PSF

MAX. SPACING 24.0"

REF ASCE7-05-GABI1015
DATE 1/1/09
DRWG A11015050109

120 PIGGYBACK DETAIL

UP TO 120 MPH WIND, 30.00 FT MEAN HGT, ASCE 7-02 OR ASCE 7-05, ENCLOSED BLDG. LOCATED ANYWHERE IN ROOF, CAT II, EXP C, WIND DL= 5.0 PSF (MIN), Kzt=1.0.

MAXIMUM TRUSS SPACING IS 24" O.C.
DETAIL IS NOT APPLICABLE IF CAP SUPPORTS ADDITIONAL LOADS SUCH AS CUPOLA, STEEPLE, CHIMNEY OR DRAG STRUT LOADS.

NOTE: TOP CHORDS OF TRUSSES SUPPORTING PIGGYBACK CAP TRUSSES MUST BE ADEQUATELY BRACED BY SHEATHING OR PURLINS. THE BUILDING ENGINEER OF RECORD SHALL PROVIDE DIAGONAL BRACING OR ANY OTHER SUITABLE ANCHORAGE TO PERMANENTLY RESTRAIN PURLINS, AND LATERAL BRACING FOR OUT OF PLANE LOADS OVER GABLE ENDS.

** REFER TO ENGINEER'S SEALED TRUSS DESIGN DRAWING FOR PIGGYBACK AND BASE TRUSS SPECIFICATIONS.

DETAIL A : PURLIN SPACING = 24" O.C. OR LESS

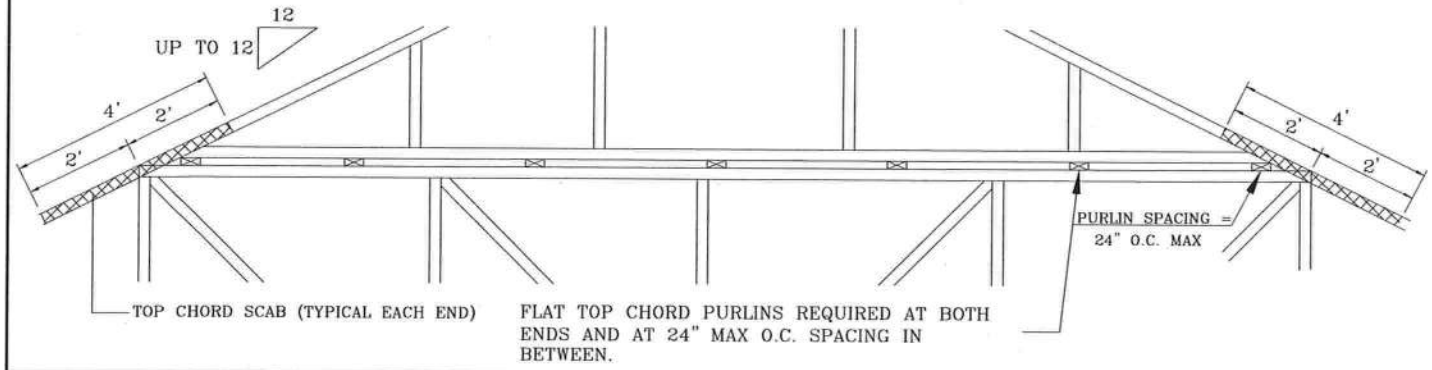

PIGGYBACK CAP TRUSS SLANT NAILED TO ALL TOP CHORD PURLIN BRACING WITH (2) 16d BOX NAILS (0.135"x3.5") AND SECURE TOP CHORD WITH 2x4 #3 GRADE SCAB (1 SIDE ONLY AT EACH END) ATTACHED WITH 2 ROWS OF 10d BOX NAILS (0.128"x3") AT 4" O.C.

ATTACH PURLIN BRACING TO THE FLAT TOP CHORD USING (2) 16d BOX NAILS (0.135"x3.5")

THE TOP CHORD #3 GRADE 2x4 SCAB MAY BE REPLACED WITH EITHER OF THE FOLLOWING: (1) 3x8 TRULOX PLATE ATTACHED WITH (8) 0.120"x1.375" NAILS, (4) INTO CAP TC & (4) INTO BASE TRUSS TC OR (1) 28PB WAVE PIGGYBACK PLATE PLATED TO THE PIGGYBACK TRUSS TC AND ATTACHED TO THE BASE TRUSS TC WITH (4) 0.120"x1.375" NAILS. NOTE: NAILING THRU HOLES OF WAVE PLATE IS ACCEPTABLE.

DETAIL B : PURLIN SPACING > 24" O.C.

PIGGYBACK CAP TRUSS SLANT NAILED TO ALL TOP CHORD PURLIN BRACING WITH (2) 16d BOX NAILS (0.135"x3.5") AND SECURE TOP CHORD WITH 2x4 #3 GRADE SCAB (1 SIDE ONLY AT EACH END) ATTACHED WITH 2 ROWS OF 10d BOX NAILS (0.128"x3") AT 4" O.C.

ATTACH PURLIN BRACING TO THE FLAT TOP CHORD USING A MINIMUM OF (2) 16d BOX NAILS (0.135"x3.5")

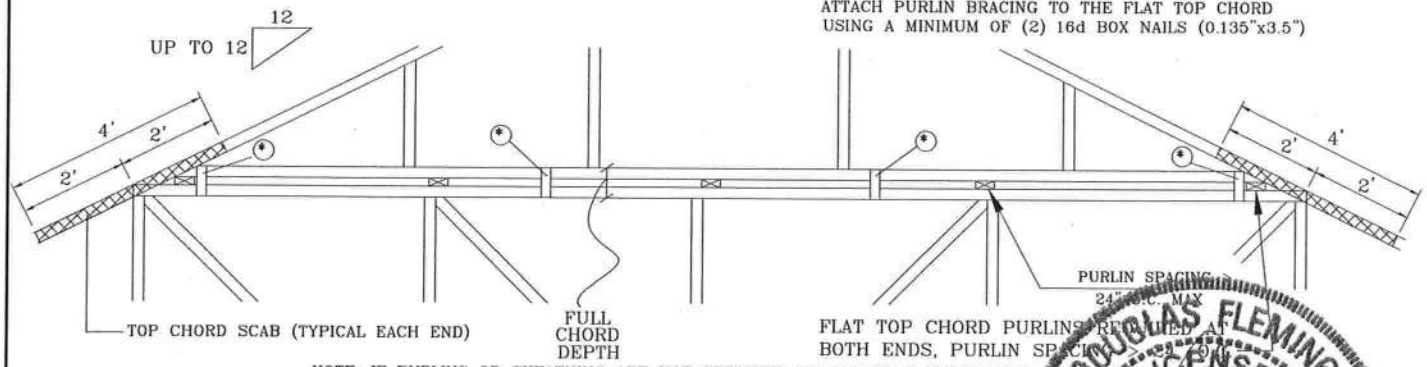

NOTE: IF PURLINS OR SHEATHING ARE NOT SPECIFIED ON THE FLAT TOP OF THE BASE TRUSS, PURLINS MUST BE INSTALLED AT 24" O.C. MAX. AND USE DETAIL A

* IN ADDITION, PROVIDE CONNECTION WITH ONE OF THE FOLLOWING METHODS:

TRULOX
USE 3x8 TRULOX PLATES FOR 2x4 CHORD MEMBER, AND 3x10 TRULOX PLATES FOR 2x6 AND LARGER CHORD MEMBERS. ATTACH TO EACH FACE @ 8' O.C. WITH (4) 0.120"x1.375" NAILS INTO CAP BOTTOM CHORD AND (4) IN BASE TRUSS TOP CHORD. TRULOX PLATES MAY BE STAGGERED 4' O.C. FRONT TO BACK FACES.

APA RATED GUSSET
8"x8"x7/16" (MIN) APA RATED SHEATHING GUSSETS (EACH FACE). ATTACH @ 8' O.C. WITH (8) 6d COMMON (0.113"x2") NAILS PER GUSSET, (4) IN CAP BOTTOM CHORD AND (4) IN BASE TRUSS TOP CHORD. GUSSETS MAY BE STAGGERED 4' O.C. FRONT TO BACK FACES.

2x4 VERTICAL SCABS
2x4 SPF#2, FULL CHORD DEPTH SCABS (EACH FACE). ATTACH @ 8' O.C. WITH (6) 10d BOX NAILS (0.128"x3") PER SCAB, (3) IN CAP BOTTOM CHORD AND (3) IN BASE TRUSS TOP CHORD. SCABS MAY BE STAGGERED 4' O.C. FRONT TO BACK FACES

28PB WAVE PIGGYBACK PLATE
ONE 28PB WAVE PIGGYBACK PLATE TO EACH FACE @ 8' O.C. ATTACH TEETH TO PIGGYBACK AT TIME OF FABRICATION. ATTACH TO SUPPORTING TRUSS WITH (4) 0.120"x1.375" NAILS PER FACE PER PLY. PIGGYBACK PLATES MAY BE STAGGERED 4' O.C. FRONT TO BACK FACES.

ITW Building Components Group Inc.

Earth City, MO 63045

WARNING READ AND FOLLOW ALL NOTES ON THIS SHEET!
Trusses require extreme care in fabricating, handling, shipping, installing and bracing. Refer to and follow BCSI (Building Component Safety Information, by TPI and WTCA) for safety practices prior to performing these functions. Installers shall provide temporary bracing per BCSI. Unless noted otherwise, top chord shall have properly attached structural panels and bottom chord shall have a properly attached rigid ceiling. Locations shown for permanent lateral restraint of webs shall have bracing installed per BCSI sections B3 & B7. See this job's general notes page for more information.

IMPORTANT FURNISH COPY OF THIS DESIGN TO INSTALLATION CONTRACTOR.
ITW Building Components Group Inc. (ITWBCG) shall not be responsible for any deviation from this design, any failure to build the truss in conformance with TPI, or fabricating, handling, shipping, installing & bracing of trusses. ITWBCG connector plates are made of 20/18/16GA (W,H/S/K) ASTM A653 grade 37/40/50 (K/W/H,S) galv. steel. Apply plates to each face of truss, positioned as shown above and on Joint Details. A seal on this drawing or cover page indicates acceptance and professional engineering responsibility solely for the truss component design shown. The suitability and use of this component for any building is the responsibility of the Building Designer per ANST/TPI 1 Sec. 2.
ITW-BCG: www.itwbcg.com; TPI: www.tpinst.com; WTCA: www.sbcindustry.com; ICC: www.iccsafe.org

DOUGLAS FLEMING LICENSE No. 66648 STATE OF FLORIDA PROFESSIONAL ENGINEER
Mar 24, 2011
03/24/2011

SPACING 24.0"

REF	PIGGYBACK
DATE	03/15/10
DRWG	PB1200310

SUBCONTRACTOR VERIFICATION FORM

APPLICATION NUMBER 1104-65 CONTRACTOR Thomas L. Pound PHONE 305-484-2621

THIS FORM MUST BE SUBMITTED PRIOR TO THE ISSUANCE OF A PERMIT

In Columbia County one permit will cover all trades doing work at the permitted site. It is REQUIRED that we have records of the subcontractors who actually did the trade specific work under the permit. Per Florida Statute 440 and Ordinance 89-6, a contractor shall require all subcontractors to provide evidence of workers' compensation or exemption, general liability insurance and a valid Certificate of Competency license in Columbia County.

Any changes, the permitted contractor is responsible for the corrected form being submitted to this office prior to the start of that subcontractor beginning any work. Violations will result in stop work orders and/or fines.

ELECTRICAL	Print Name Thomas L. Pound License #: N/A	Signature Phone #: 305-484-2621
MECHANICAL/ A/C _____	Print Name Thomas L. Pound License #: N/A	Signature Phone #: 305-484-2621
PLUMBING/ GAS	Print Name Thomas L. Pound License #: N/A	Signature Phone #: 305-484-2621
ROOFING	Print Name Thomas L. Pound License #: N/A	Signature Phone #: 305-484-2621
SHEET METAL	Print Name Thomas L. Pound License #: N/A	Signature Phone #: 305-484-2621
FIRE SYSTEM/ SPRINKLER	Print Name Thomas L. Pound License#: N/A	Signature Phone #: 305-484-2621
SOLAR	Print Name Thomas L. Pound License #: N/A	Signature Phone #: 305-484-2621

Specialty License	License Number	Sub-Contractors Printed Name	Sub-Contractors Signature
MASON	N/A	Thomas L. Pound	
CONCRETE FINISHER	N/A	Thomas L. Pound	
FRAMING	N/A	Thomas L. Pound	
INSULATION	N/A	Thomas L. Pound	
STUCCO	N/A	Thomas L. Pound	
DRYWALL	N/A	Pound	
PLASTER	N/A	Thomas L. Pound	
CABINET INSTALLER	N/A	Thomas L. Pound	
PAINTING	N/A	Thomas L. Pound	
ACOUSTICAL CEILING	N/A	N/A	N/A
GLASS	N/A	Thomas L. Pound	
CERAMIC TILE	N/A	Thomas L. Pound	
FLOOR COVERING	N/A	Thomas L. Pound	
ALUM/VINYL SIDING	N/A	N/A	N/A
GARAGE DOOR	N/A	N/A	N/A
METAL BLDG ERECTOR	N/A	N/A	N/A

F. S. 440.103 Building permits; identification of minimum premium policy.--Every employer shall, as a condition to applying for and receiving a building permit, show proof and certify to the permit issuer that it has secured compensation for its employees under this chapter as provided in ss. 440.10 and 440.38, and shall be presented each time the employer applies for a building permit.

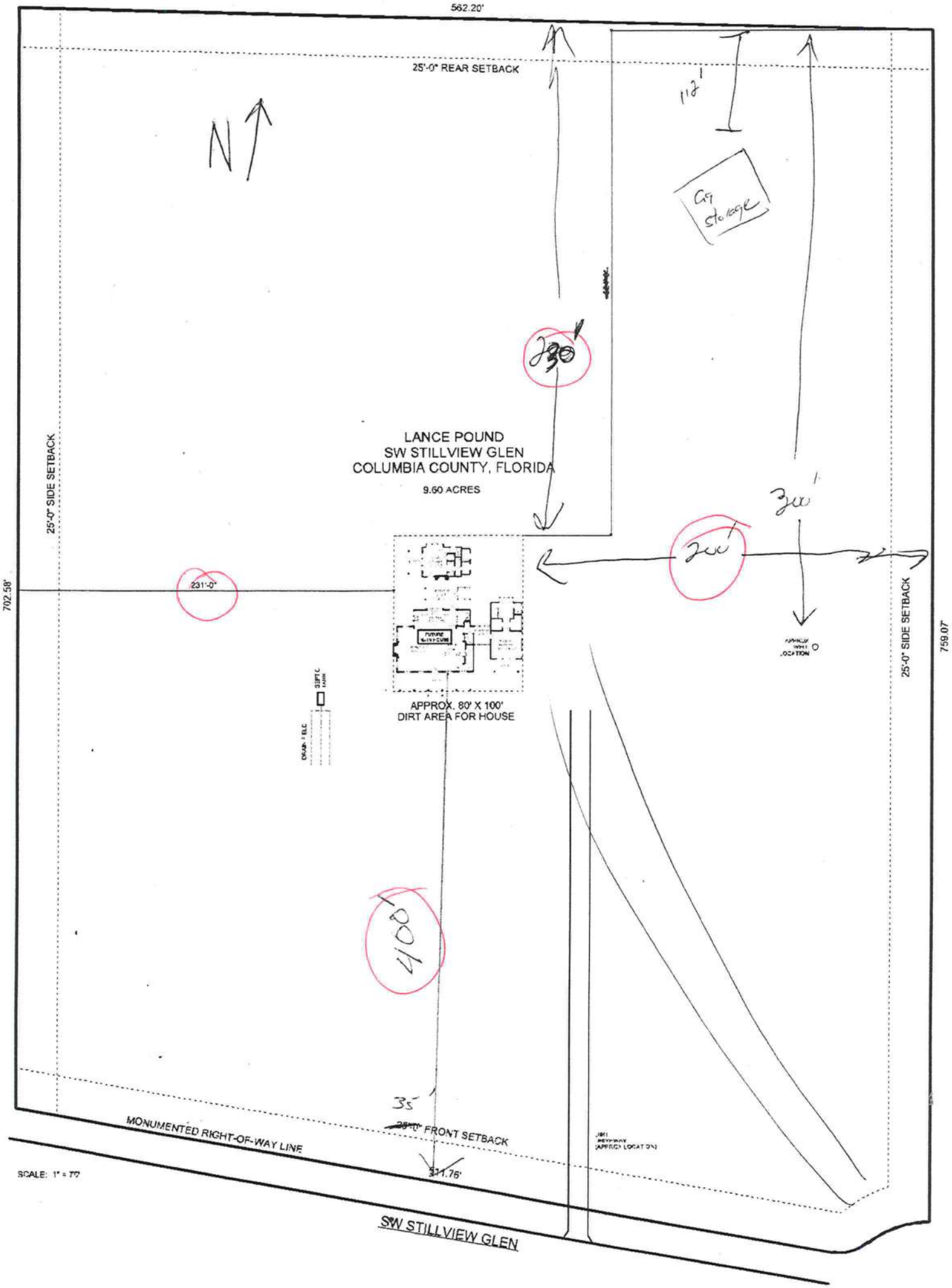
562.20'
25'-0" REAR SETBACK
N
118'
Gas storage
230'
LANCE POUND
SW STILLVIEW GLEN
COLUMBIA COUNTY, FLORIDA
9.60 ACRES
300'
200'
25'-0" SIDE SETBACK
702.58'
231'-0"
APPROX. 80' X 100'
DIRT AREA FOR HOUSE
25'-0" SIDE SETBACK
759.07'
400'
35'
25'-0" FRONT SETBACK
MONUMENTED RIGHT-OF-WAY LINE
SCALE: 1" = 72'
SW STILLVIEW GLEN

Prepared by and return to:
Joel Fletcher Foreman
Attorney at Law
Foreman & Olvera, P.A.
207 South Marion Avenue
Lake City, FL 32025-0550
386-752-8420
File Number: **449447**
Will Call No.:

Inst:200912003906 Date:3/12/2009 Time:10:09 AM
Doc Stamp-Deed:490 00
DC,P.DeWitt Cason,Columbia County Page 1 of 2 B:1168 P:2565

[Space Above This Line For Recording Data]

Warranty Deed

This Warranty Deed made this **6th** day of **March, 2009** between **Reinaldo Ponce and Emilia C. Ponce, husband and wife** whose post office address is **4061 180th Avenue N., Loxahatchee, FL 33470**, grantor, and **Thomas L. Pound and Elizabeth A. Pound, husband and wife** whose post office address is **16740 SW 300th Street, Homestead, FL 33030**, grantee:

(Whenever used herein the terms "grantor" and "grantee" include all the parties to this instrument and the heirs, legal representatives, and assigns of individuals, and the successors and assigns of corporations, trusts and trustees)

Witnesseth, that said grantor, for and in consideration of the sum of SEVENTY THOUSAND AND NO/100 DOLLARS ($70,000.00) and other good and valuable considerations to said grantor in hand paid by said grantee, the receipt whereof is hereby acknowledged, has granted, bargained, and sold to the said grantee, and grantee's heirs and assigns forever, the following described land, situate, lying and being in **Columbia County, Florida** to-wit:

Lot 17, OF AN UNRECORDED SUBDIVISION KNOWN AS CARDINAL FARMS A parcel of land in Section 11, Township 6 South, Range 16 East, Columbia County, Florida being more particularly described as follows:

Commence at the Southeast corner of Section 11, Township 6 South Range 16 East, Columbia County, Florida and run thence S 88°19'59" W along the South line of said Section 11 a distance of 3266.86 feet; thence N 22°15'30" E a distance of 510.42 feet; thence N 01°40'01" W a distance of 915.56 feet; thence N 22°03'23" E a distance of 1397.36 feet; thence N 25°00'03" E a distance of 2.82 feet to a point on the South line of the North ½ of Section 11; thence continue N 25° 00'03" E a distance of 1016.36 feet; thence N 79°24'31" W a distance of 367.38 feet to the Point of Beginning; thence continue N 79° 24'31" W a distance of 571.04 feet; thence N 00°22'53" E a distance of 733.05 feet; thence S 88° 04'08" E a distance of 562.21 feet; thence S 00° 22'53" W a distance of 819.06 feet to the Point of Beginning.

SUBJECT TO road way easement to Columbia County deed restrictions in Official Records Book 1012, pages 905- 909, Columbia County , Florida and

SUBJECT TO power line easement.

Parcel Identification Number: 11-6S-16-03815-117

Together with all the tenements, hereditaments and appurtenances thereto belonging or in anywise appertaining.

To Have and to Hold, the same in fee simple forever.

And the grantor hereby covenants with said grantee that the grantor is lawfully seized of said land in fee simple; that the grantor has good right and lawful authority to sell and convey said land; that the grantor hereby fully warrants the title to said land and will defend the same against the lawful claims of all persons whomsoever; and that said land is free of all encumbrances, except taxes accruing subsequent to **December 31, 2008**.

In Witness Whereof, grantor has hereunto set grantor's hand and seal the day and year first above written.

Signed, sealed and delivered in our presence:

Witness Name: Reinaldo Ponce Sr.

Witness Name: Justa Ponce

Reinaldo Ponce (Seal)

Emilia C. Ponce (Seal)

State of Florida
County of Palm Beach

The foregoing instrument was acknowledged before me this 4th day of March, 2009 by Reinaldo Ponce and Emilia C. Ponce, who [ ] are personally known or [X] have produced a driver's license as identification.

[Notary Seal]

NOTARY PUBLIC STATE OF FLORIDA
M. Llanes
Commission # DD419254
Expires June 13, 2009
Bonded Troy Fain - Insurance, Inc. 800-385-7019

Notary Public

Printed Name: MLLANES

My Commission Expires: 6-13-09

DoubleTime®

Inst:201112006422 Date:4/27/2011 Time:4:35 PM
DC,P.DeWitt Cason,Columbia County Page 1 of 1 B:1213 P:2273

NOTICE OF COMMENCEMENT

County Clerk's Office Stamp or Seal

Tax Parcel Identification Number 11-6S-16-03815-117

THE UNDERSIGNED hereby gives notice that improvements will be made to certain real property, and in accordance with Section 713.13 of the Florida Statutes, the following information is provided in this **NOTICE OF COMMENCEMENT**.

1. Description of property *(legal description)*:
   a) Street *(job)* Address: 315 SW Stillview CLN
2. General description of improvements:
3. Owner Information
   a) Name and address: Thomas L. Pound and Elizabeth A. Pound 16740 S.W. 300 St. Homestead, FL 33030
   b) Name and address of fee simple titleholder (if other than owner) NA
   c) Interest in property Home Site
4. Contractor Information
   a) Name and address: Owner-builder Thomas L. Pound
   b) Telephone No.: 305-484-2621 Fax No. (Opt.)
5. Surety Information
   a) Name and address: NA
   b) Amount of Bond:
   c) Telephone No.: Fax No. (Opt.)
6. Lender
   a) Name and address: NA
   b) Phone No.
7. Identity of person within the State of Florida designated by owner upon whom notices or other documents may be served:
   a) Name and address: NA
   b) Telephone No.: Fax No. (Opt.)

8. In addition to himself, owner designates the following person to receive a copy of the Lienor's Notice as provided in Section 713.13(l)(b), Florida Statutes:
   a) Name and address: NA
   b) Telephone No.: Fax No. (Opt.)

9. Expiration date of Notice of Commencement **(the expiration date is one year from the date of recording unless a different date is specified)**:

WARNING TO OWNER: ANY PAYMENTS MADE BY THE OWNER AFTER THE EXPIRATION OF THE NOTICE OF COMMENCEMENT ARE CONSIDERED IMPROPER PAYMENTS UNDER CHAPTER 713, PART I, SECTION 713.13, FLORIDA STATUTES, AND CAN RESULT IN YOUR PAYING TWICE FOR IMPROVEMENTS TO YOUR PROPERTY; A NOTICE OF COMMENCEMENT MUST BE RECORDED AND POSTED ON THE JOB SITE BEFORE THE FIRST INSPECTION. IF YOU INTEND TO OBTAIN FINANCING, CONSULT YOUR LENDER OR AN ATTORNEY BEFORE COMMENCING WORK OR RECORDING YOUR NOTICE OF COMMENCEMENT.

STATE OF FLORIDA
COUNTY OF COLUMBIA

NOTARY PUBLIC-STATE OF FLORIDA
Linda R. Roder
Commission #DD755608
Expires: MAR. 24, 2012
BONDED THRU ATLANTIC BONDING CO., INC.

X
10. Elizabeth A Pound
Signature of Owner or Owner's Authorized Office/Director/Partner/Manager

Thomas L. Pound, Elizabeth A. Pound
Print Name

The foregoing instrument was acknowledged before me, a Florida Notary, this 25 day of April, 20 11, by: Elizabeth + Lance Pound as owners **(type of authority, e.g. officer, trustee, attorney fact) for** Lance + Elizabeth Pound **(name of party on behalf of whom instrument was executed).**

Personally Known ___ OR Produced Identification ___ Type

Notary Signature Linda Roder

Notary Stamp or Seal:

NOTARY PUBLIC-STATE OF FLORIDA
Linda R. Roder
Commission #DD755608
Expires: MAR. 24, 2012
BONDED THRU ATLANTIC BONDING CO., INC.

---AND---

11. Verification pursuant to Section 92.525, Florida Statutes. Under penalties of perjury, I declare that I have read the foregoing and that the facts stated in it are true to the best of my knowledge and belief.

X
Signature of Natural Person Signing (in line #10 above)

X Elizabeth A. Pound

COLUMBIA COUNTY BUILDING DEPARTMENT
RESIDENTIAL CHECK LIST REQUIRMENTS

MINIMUM PLAN REQUIREMENTS FOR THE FLORIDA BUILDING CODE RESIDENTIAL 2007 ONE (1) AND TWO (2) FAMILY DWELLINGS

ALL REQUIREMENTS ARE SUBJECT TO CHANGE

ALL BUILDING PLANS MUST INDICATE COMPLIANCE with the Current 2007 FLORIDA BUILDING CODES RESIDENTIAL. ALL PLANS OR DRAWINGS SHALL PROVIDE CALCULATIONS AND DETAILS THAT HAVE THE SEAL AND SIGNATURE OF A CERTIFIED ARCHITECT OR ENGINEER REGISTERED IN THE STATE OF FLORIDA, OR ALTERNATE METHODOLOGIES, APPROVED BY THE STATE OF FLORIDA BUILDING COMMISSION FOR ONE-AND-TWO FAMILY DWELLINGS.

FOR DESIGN PURPOSES THE FOLLOWING BASIC WIND SPEEDS ARE PER FIGURE R301.2(4) of the FLORIDA BUILDING CODES RESIDENTIAL (Florida Wind speed map) **SHALL BE USED.**

WIND SPEED LINE SHALL BE DEFINED AS FOLLOWS: THE CENTERLINE OF INTERSTATE 75.

ALL BUILDINGS CONSTRUCTED EAST OF SAID LINE SHALL BE -------- 100 MPH
ALL BUILDINGS CONSTRUCTED WEST OF SAID LINE SHALL BE --------110 MPH
NO AREA IN COLUMBIA COUNTY IS IN A WIND BORNE DEBRIS REGION

GENERAL REQUIREMENTS APPLICANT - PLEASE CHECK ALL APPLICABLE BOXES BELOW SUBMITTAL	Yes	No	N/A
1 Two (2) complete sets of plans containing the following:	✓		
2 All drawings must be clear, concise, drawn to scale, details that are not used shall be marked void	✓		
3 Condition space (Sq. Ft.) | Total (Sq. Ft.) under roof	IIIIIII	IIIIIII	IIIII

Designers name and signature shall be on all documents and a licensed architect or engineer, signature and official embossed seal shall be affixed to the plans and documents as per the FLORIDA BUILDING CODES RESIDENTIAL R101.2.1

Site Plan information including:

4	Dimensions of lot or parcel of land	✓		
5	Dimensions of all building set backs	✓		
6	Location of all other structures (include square footage of structures) on parcel, existing or proposed well and septic tank and all utility easements.	✓		
7	Provide a full legal description of property.	✓		

Wind-load Engineering Summary, calculations and any details required

GENERAL REQUIREMENTS APPLICANT – PLEASE CHECK THE APPLICABLE ITEMS BEFORE SUBMITTING		Please indicate if the item is applicable		
		IIIIII YES	IIIII NO	IIIIII N/A
8	Plans or specifications must show compliance with FBCR Chapter 3	✓		
9	Basic wind speed (3-second gust), miles per hour	✓		
10	(Wind exposure – if more than one wind exposure is used, the wind exposure and applicable wind direction shall be indicated)	✓		
11	Wind importance factor and nature of occupancy	✓		
12	The applicable internal pressure coefficient, Components and Cladding	✓		
13	The design wind pressure in terms of psf (kN/m²), to be used for the design of exterior component, cladding materials not specifally designed by the registered design professional.	✓		

Elevations Drawing including:

14	All side views of the structure	✓		
15	Roof pitch	✓		
16	Overhang dimensions and detail with attic ventilation	—		
17	Location, size and height above roof of chimneys	—		
18	Location and size of skylights with Florida Product Approval	—		
18	Number of stories	—		
20A	Building height from the established grade to the roofs highest peak	—		

Floor Plan including:

20	Dimensioned area plan showing rooms, attached garage, breeze ways, covered porches, deck, balconies	—		
21	Raised floor surfaces located more than 30 inches above the floor or grade	—		
22	All exterior and interior shear walls indicated	—		
23	Shear wall opening shown (Windows, Doors and Garage doors)	—		
24	Emergency escape and rescue opening shown in each bedroom (net clear opening shown)			
25.	Safety glazing of glass where needed			
26	Fireplaces types (gas appliance) (vented or non-vented) or wood burning with Hearth (see chapter 10 of FBCR)	—		
27	Stairs with dimensions (width, tread and riser and total run) details of guardrails, Handrails (see FBCR SECTION 311)	—		
28	Identify accessibility of bathroom (see FBCR SECTION 322)	—		

All materials placed within opening or onto/into exterior walls, soffits or roofs shall have Florida product approval number and mfg. installation information submitted with the p
(see Florida product approval form)

5/19/2010 09:35 386/582160

GENERAL REQUIREMENTS
APPLICANT: PLEASE CHECK ALL APPLICABLE BOXES BEFORE SUBMITTAL

FBCR 403: Foundation Plans

		YES	NO	N/A
29	Location of all load-bearing walls footings indicated as standard, monolithic, dimensions, size and type of reinforcing.			
30	All posts and/or column footing including size and reinforcing			
31	Any special support required by soil analysis such as piling.			
32	Assumed load-bearing valve of soil _____ Pound Per Square Foot			
33	Location of horizontal and vertical steel, for foundation or walls (include # size and type)			

FBCR 506: CONCRETE SLAB ON GRADE

34	Show Vapor retarder (6mil. Polyethylene with joints lapped 6 inches and sealed)			
35	Show control joints, synthetic fiber reinforcement or welded fire fabric reinforcement and Supports			

FBCR 320: PROTECTION AGAINST TERMITES

36	Indicate on the foundation plan if soil treatment is used for subterranean termite prevention or submit other approved termite protection methods. **Protection shall be provided by registered termiticides**			

FBCR 606: Masonry Walls and Stem walls (load bearing & shear Walls)

37	Show all materials making up walls, wall height, and Block size, mortar type			
38	Show all Lintel sizes, type, spans and tie-beam sizes and spacing of reinforcement			

Metal frame shear wall and roof systems shall be designed, signed and sealed by Florida Prof. Engineer Architect

Floor Framing System: First and/or second story

39	Floor truss package shall including layout and details, signed and sealed by Florida Registered Professional Engineer			
40	Show conventional floor joist type, size, span, spacing and attachment to load bearing walls, stem walls and/or priers			
41	Girder type, size and spacing to load bearing walls, stem wall and/or priers			
42	Attachment of joist to girder			
43	Wind load requirements where applicable			
44	Show required under-floor crawl space			
45	Show required amount of ventilation opening for under-floor spaces			
46	Show required covering of ventilation opening			
47	Show the required access opening to access to under-floor spaces			
	Show the sub-floor structural panel sheathing type, thickness and fastener schedule on the edges &			

48	intermediate of the areas structural panel sheathing			
49	Show Draftstopping, Fire caulking and Fire blocking			
50	Show fireproofing requirements for garages attached to living spaces, per FBCR section 309			
51	Provide live and dead load rating of floor framing systems (psf).			

FBCR CHAPTER 6 WOOD WALL FRAMING CONSTRUCTION

	GENERAL REQUIREMENTS	YES	NO	N/A
52	Stud type, grade, size, wall height and oc spacing for all load bearing or shear walls			
53	Fastener schedule for structural members per table FBCR 602.3 are to be shown			
54	Show Wood structural panel's sheathing attachment to studs, joist, trusses, rafters and structural members, showing fastener schedule attachment on the edges & intermediate of the areas structural panel sheathing			
55	Show all required connectors with a max uplift rating and required number of connectors and oc spacing for continuous connection of structural walls to foundation and roof trusses or rafter systems			
56	Show sizes, type, span lengths and required number of support jack studs, king studs for shear wall opening and girder or header per FBCR Table 502.5 (1)			
57	Indicate where pressure treated wood will be placed			
58	Show all wall structural panel sheathing, grade, thickness and show fastener schedule for structural panel sheathing edges & intermediate areas			
59	A detail showing gable truss bracing, wall balloon framing details or/ and wall hinge bracing detail			

FBCR :ROOF SYSTEMS:

60	Truss design drawing shall meet section FBCR 802.10 Wood trusses			
61	Include a layout and truss details, signed and sealed by Florida Professional Engineer			
62	Show types of connector's assemblies' and resistance uplift rating for all trusses and rafters			
63	Show gable ends with rake beams showing reinforcement or gable truss and wall bracing details			
64	Provide dead load rating of trusses			

FBCR 802:Conventional Roof Framing Layout

65	Rafter and ridge beams sizes, span, species and spacing			
66	Connectors to wall assemblies' include assemblies' resistance to uplift rating			
67	Valley framing and support details			
68	Provide dead load rating of rafter system			

FBCR Table 602,3(2) & FBCR 803 ROOF SHEATHING

69	Include all materials which will make up the roof decking, identification of structural panel sheathing, grade, thickness			
70	Show fastener Size and schedule for structural panel sheathing on the edges & intermediate areas			

/19/2010 09:35 386/582160

FBCR ROOF ASSEMBLIES FRC Chapter 9

71	Include all materials which will make up the roof assembles covering	✓		
72	Submit Florida Product Approval numbers for each component of the roof assembles covering	✓		

FBCR Chapter 11 Energy Efficiency Code for residential building

Residential construction shall comply with this code by using the following compliance methods in the FBCR chapter11 Residential buildings compliance methods. *Two of the required forms are to be submitted, showing dimensions condition area equal to the total condition living space area*

		YES	NO	N/A
73	Show the insulation R value for the following areas of the structure	✓		
74	Attic space	✓		
75	Exterior wall cavity	✓		
76	Crawl space	✓		

HVAC information

77	Submit two copies of a Manual J sizing equipment or equivalent computation study	✓		
78	Exhaust fans locations in bathrooms	✓		
79	Show clothes dryer route and total run of exhaust duct	✓		

Plumbing Fixture layout shown

80	All fixtures waste water lines shall be shown on the foundation plan	✓		
81	Show the location of water heater	✓		

Private Potable Water

existing well

82	Pump motor horse power			
83	Reservoir pressure tank gallon capacity			
84	Rating of cycle stop valve if used			

Electrical layout shown including

85	Switches, outlets/receptacles, lighting and all required GFCI outlets identified	✓		
86	Ceiling fans	✓		
87	Smoke detectors & Carbon dioxide detectors	✓		
88	Service panel, sub-panel, location(s) and total ampere ratings	✓		
89	On the electrical plans identify the electrical service overcurrent protection device for the main electrical service. This device shall be installed on the exterior of structures to serve as a disconnecting means for the utility company electrical service. Conductors used from the exterior disconnecting means to a panel or sub panel shall have four-wire conductors, of which one conductor shall be used as an equipment ground. Indicate if the utility company service entrance cable will be of the overhead or underground type.	✓		

90	Appliances and HVAC equipment and disconnects	✓		
91	Arc Fault Circuits (AFCI) in bedrooms	✓		

Disclosure Statement for Owner Builders *If you as the applicant will be acting as an owner/builder under section 489.103(7) of the Florida Statutes, submit the required owner builder disclosure statement form.*

Notice Of Commencement

A notice of commencement form **recorded** in the Columbia County Clerk Office is required to be filed with the building department Before Any Inspections can be preformed.

GENERAL REQUIREMENTS

APPLICANT: PLEASE CHECK ALL APPLICABLE BOXES BEFORE SUBMITTING

Item to Include with Permit Application Or Item to be Uploaded

THE FOLLOWING ITEMS MUST BE SUBMITTED WITH BUILDING PLANS

		YES	NO	N/A
92	**Building Permit Application** A current Building Permit Application form is to be completed and submitted for all residential projects	✓		
93	**Parcel Number** The parcel number (Tax ID number) from the Property Appraiser (386) 758-1084 is required. A copy of property deed is also requested	✓		
94	**Environmental Health Permit or Sewer Tap Approval** A copy of a approved Columbia County Environmental Health (386) 758-1058			
95	**City of Lake City** A permit showing an approved waste water sewer tap			
96	**Toilet facilities shall be provided for all construction sites**			
97	**Town of Fort White** (386) 497-2321 If the parcel in the application for building permit is within the Corporate city limits of Fort White an approval land use development letter issued by the Town of Fort is required to be submitted with the application for a building permit.			
98	**Flood Information:** All projects within the Floodway of the Suwannee or Santa Fe Rivers shall require permitting through the Suwannee River Water Management District, before submitting a application to this office. Any project located within a flood zone where the base flood elevation (100 year flood) has been established shall meet the requirements of Section 8.5.2 of the Columbia County Land Development Regulations. Any project located within a flood zone where the base flood elevation has not been established (Zone A) shall meet the requirements of Section 8.5.3 of the Columbia County Land Development Regulations			
99	CERTIFIED FINISHED FLOOR ELEVATIONS will be required on any project where the base flood elevation (100 year flood) has been established			
100	A development permit will also be required. Development permit cost is **$50.00**			
101	**Driveway Connection:** If the property does not have an existing access to a public road, then an application for a culvert permit (**$25.00**) must be made. If the applicant feels that a culvert is not needed, they may apply for a culvert waiver (**$50.00**). All culvert waivers are sent to the Columbia County Public Works Department for approval or denial.			
102	**911 Address:** If the project is located in an area where a 911 address has not been issued, then application for a 911address must be applied for and received through the Columbia County Emergency Management Office of 911 Addressing Department (386) 758-1125	✓		

COLUMBIA COUNTY BUILDING DEPARTMENT
135 NE Hernando Ave., Suite B-21
Lake City, FL 32055
Office: 386-758-1008 Fax: 386-758-2160

OWNER BUILDER DISCLOSURE STATEMENT

I understand that state law requires construction to be done by a licensed contractor and have applied for an owner-builder permit under an exemption from the law. The exemption specifies that I, as the owner of the property listed, may act as my own contractor with certain restrictions even though I do not have a license.

I understand that building permits are not required to be signed by a property owner unless he or she is responsible for the construction and is not hiring a licensed contractor to assume responsibility.

I understand that, as an owner-builder, I am the responsible party of record on a permit. I understand that I may protect myself from potential financial risk by hiring a licensed contractor and having the permit filed in his or her name instead of my own name. I also understand that a contractor is required by law to be licensed and bonded in Florida and to list his or her license numbers on permits and contracts.

I understand that I may build or improve a one-family or two-family residence or farm outbuilding. I may also build or improve a commercial building if the costs do not exceed $75,000. The building or residence must be for my own use or occupancy. It may not be built or substantially improved for sale or lease. If a building or residence that I have built or substantially improved myself is sold or leased with in 1 year after the construction is complete, the law will presume that I built or substantially improved it for sale or lease, which violates the exemption.

I understand that, as the owner-builder, I must provide direct, onsite supervision of the construction.

I understand that I may not hire an unlicensed person to act as my contractor or to supervise persons working on my building or residence. It is my responsibility to ensure that the persons whom I employ have the licenses required by law and by county or municipal ordinance.

I understand that it is frequent practice of unlicensed persons to have the property owner obtain an owner-builder permit that erroneously implies that the property owner is providing his or her own labor and materials. I, as an owner-builder, may be held liable and subjected to serious financial risk for any injuries sustained by an unlicensed person or his or her employees while working on my property. My homeowner's insurance may not provide coverage for those injuries. I am willfully acting as an owner-builder and am aware of the limits of my insurance coverage for injuries to workers on my property.

I understand that I may not delegate the responsibility for supervising work to a licensed contractor who is not licensed to perform the work being done. Any person working on my building who is not licensed must work under my direct supervision and must be employed by me, which means that I must comply with laws requiring the withholding of federal income tax and social security contributions under the Federal Insurance Contributions Act (FICA) and must provide workers' compensation for the employee. I understand that my failure to follow these laws may subject me to serious financial risk.

I agree that, as the party legally and financially responsible for this proposed construction activity, I will abide by all applicable laws and requirements that govern owner-builders as well as employers. I also understand that the construction must comply with all applicable laws, ordinances, building codes, and zoning regulations.

I understand that I may obtain more information regarding my obligations as an employer from the Internal Revenue Service, the United States Small Business Administration, the Florida Department of Financial Services, and the Florida Department of Revenue. I also understand that I may contact the Florida Construction Industry Licensing Board at 850-487-1395 or Internet website address http://www.myflorida.com/dbpr/pro/cilb/index.html for more information about licensed contractors.

I am aware of, and consent to, an owner-builder building permit applied for in my name and understand that I am the party legally and financially responsible for the proposed construction activity at the following address:

_____.

I agree to notify Columbia County Building Department immediately of any additions, deletions, or changes to any of the information that I have provided on this disclosure. Licensed contractors are regulated by laws designed to protect the public. If you contract with a person who does not have a license, the Construction Industry Licensing Board and Department of Business and Professional Regulation may be unable to assist you with any financial loss that you sustain as a result of a complaint. Your only remedy against an unlicensed contractor may be in civil court. It is also important for you to understand that, if an unlicensed contractor or employee of an individual of firm is injured while working on your property, you may be held liable for damages. If you obtain an owner-builder permit and wish to hire a licensed contractor, you will be responsible for verifying whether the contractor is properly licensed and the status of the contractor's workers' compensation coverage.

I understand that if I hire subcontractors they must be licensed for that type of work in Columbia County, ex: framing, stucco, masonry, and state registered builders. Registered Contractors must have a minimum of $300,000.00 in General Liability insurance coverage and the proper workers' compensation. Specialty Contractors must have a minimum of $100,000.00 in General Liability insurance coverage and the proper workers' compensation coverage.

Before a building permit can be issued, this disclosure statement must be completed and signed by the property owner and returned to Columbia County Building Department.

TYPE OF CONSTRUCTION

(X) Single Family Dwelling ( ) Two-Family Residence ( ) Farm Outbuilding

( ) Addition, Alteration, Modification or other Improvement

( ) Commercial, Cost of Construction_____ Construction of_____

( ) Other_____

I Lance Pound, have been advised of the above disclosure statement for exemption from contractor licensing as an owner/builder. I agree to comply with all requirements provided for in Florida Statutes allowing this exception for the construction permitted by Columbia County Building Permit.

_____ 4-25-11

Owner Builder Signature Date

NOTARY OF OWNER BUILDER SIGNATURE

NOTARY PUBLIC-STATE OF FLORIDA
Linda R. Roder
Commission #DD755608
Expires: MAR. 24, 2012
BONDED THRU ATLANTIC BONDING CO., INC.

The above signer is personally known to me or produced identification _____

Notary Signature _____ Date 4-25-11 (Seal)

FOR BUILDING DEPARTMENT USE ONLY

I hereby certify that the above listed owner builder has been given notice of the restriction stated above.

Building Official/Representative_____

Revised: 7-23-09
DISCLOSURE STATEMENT 09
Documents: B&Z Forms

11-0055

CR # 10-5207
PERMIT NO. 1035358
DATE PAID: 5/9/11
FEE PAID: 110.00
RECEIPT #: 1023721

STATE OF FLORIDA
DEPARTMENT OF HEALTH
ONSITE SEWAGE TREATMENT AND DISPOSAL SYSTEM
APPLICATION FOR CONSTRUCTION PERMIT

APPLICATION FOR:
[X] New System [X] Existing System [ ] Holding Tank [ ] Innovative
[ ] Repair [ ] Abandonment [ ] Temporary [ ]

APPLICANT: THOMAS L. & ELIZABETH POUND

AGENT: LINDA RNODER (386) 752-2281 TELEPHONE: (305) 484-2621

MAILING ADDRESS: 16740 SW 300TH ST. HOMESTEAD FL 33030

TO BE COMPLETED BY APPLICANT OR APPLICANT'S AUTHORIZED AGENT. SYSTEMS MUST BE CONSTRUCTED BY A PERSON LICENSED PURSUANT TO 489.105(3)(m) OR 489.552, FLORIDA STATUTES. IT IS THE APPLICANT'S RESPONSIBILITY TO PROVIDE DOCUMENTATION OF THE DATE THE LOT WAS CREATED OR PLATTED (MM/DD/YY) IF REQUESTING CONSIDERATION OF STATUTORY GRANDFATHER PROVISIONS.

PROPERTY INFORMATION

LOT: 17 BLOCK: N/A SUBDIVISION: CARDINAL FARMS UNRC. PLATTED:

PROPERTY ID #: 11-6S-16-03815-117 ZONING: AG I/M OR EQUIVALENT: [NO]

PROPERTY SIZE: 10.010 ACRES WATER SUPPLY: [X] PRIVATE PUBLIC [ ]<=2000GPD [ ]>2000GPD

IS SEWER AVAILABLE AS PER 381.0065, FS? [NO] DISTANCE TO SEWER: N/A FT

PROPERTY ADDRESS: 315 SE STILLVIEW GLEN

DIRECTIONS TO PROPERTY: SR 47 SOUTH TURN LEFT ON HERLONG RD. TURN RIGHT ON SKYLINE, TURN LEFT ON STILLVIEW GLENN, LOT AT END ON LEFT.

BUILDING INFORMATION [X] RESIDENTIAL [ ] COMMERCIAL

Unit No.	Type of Establishment	No. of Bedrooms	Building Area Sqft	Commercial/Institutional System Design Table 1, Chapter 64E-6, FAC
1	HOUSE	1	502	Original Attached
2				
3				
4				

[ ] Floor/Equipment Drains [ ] Other (Specify)

SIGNATURE: [signature] DATE: 5-8-11

DH 4015, 08/09 (Obsoletes previous editions which may not be used)
Incorporated 64E-6.001, FAC

Application for Onsite Sewage Disposal System Construction Permit. Part II Site Plan

Permit Application Number: 11-0232E

ALL CHANGES MUST BE APPROVED BY THE COUNTY HEALTH UNIT

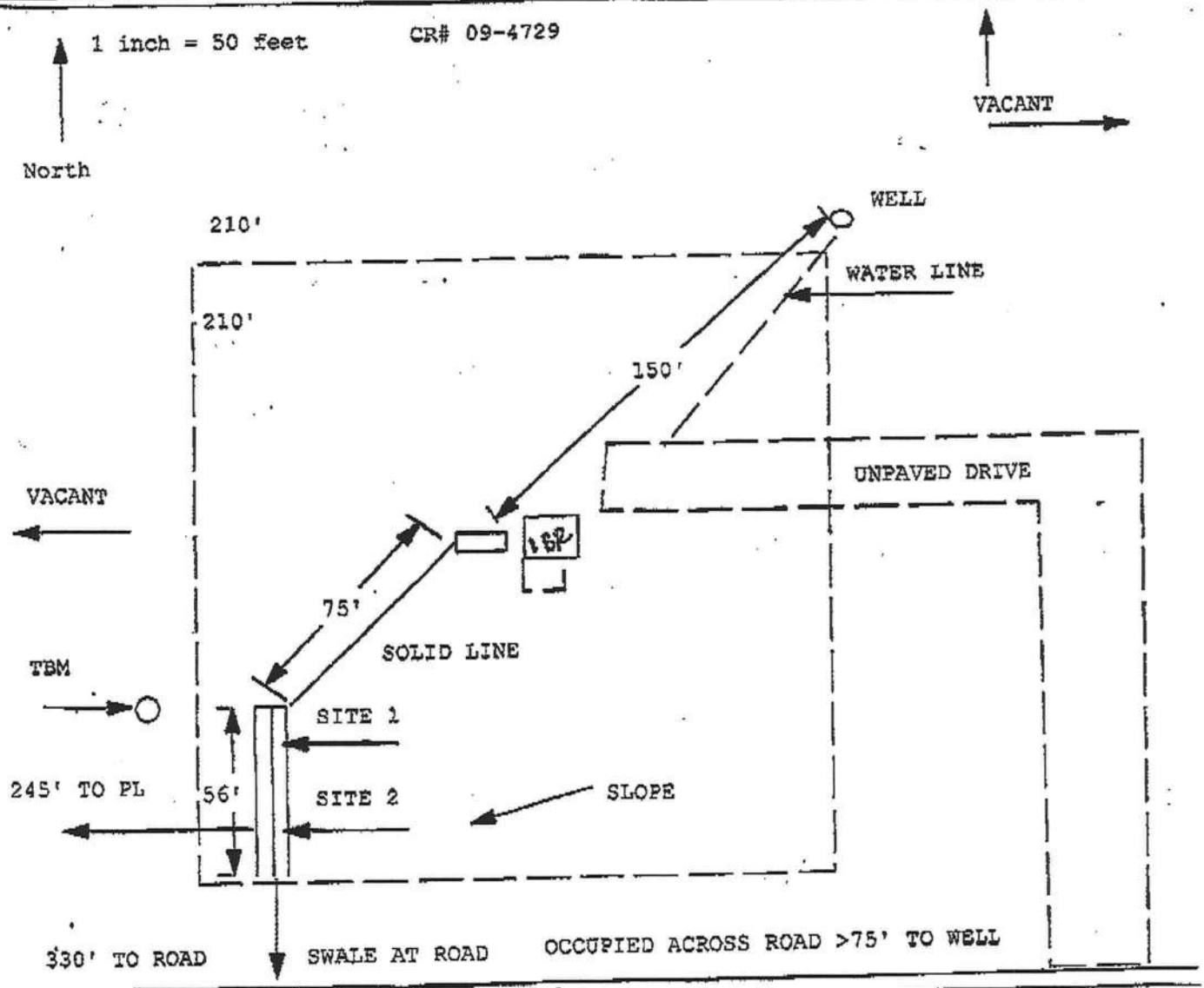

Site Plan Submitted By Neal Lloyd Date 5/5/11

Plan Approved ✓ Not Approved ___ Date 5/23/11

By: [signature] Columbia CPHU

Notes:

TIME LIMITATIONS OF APPLICATION : An application for a permit for any proposed work shall be deemed to have been abandoned 180 days after the date of filing, unless such application has been pursued in good faith or a permit has been issued; except that the building official is authorized to grant one or more extensions of time for additional periods not exceeding 90 days each. The extension shall be requested in writing and justifiable cause demonstrated.

TIME LIMITATIONS OF PERMITS: Every permit issued shall become invalid unless the work authorized by such permit is commenced within 180 days after its issuance, or if the work authorized by such permit is suspended or abandoned for a period of 180 days after the time work is commenced. A valid permit receives an approved inspection every 180 days. Work shall be considered not suspended, abandoned or invalid when the permit has received an approved inspection within 180 days of the previous approved inspection.

FLORIDA'S CONSTRUCTION LIEN LAW: Protect Yourself and Your Investment: According to Florida Law, those who work on your property or provide materials, and are not paid-in-full, have a right to enforce their claim for payment against your property. This claim is known as a construction lien. If your contractor fails to pay subcontractors or material suppliers or neglects to make other legally required payments, the people who are owed money may look to your property for payment, even if you have paid your contractor in full.
This means if a lien is filed against your property, it could be sold against your will to pay for labor, materials or other services which your contractor may have failed to pay.

NOTICE OF RESPONSIBILITY TO BUILDING PERMITEE: ***YOU ARE HEREBY NOTIFIED*** as the recipient of a building permit from Columbia County, Florida, you will be held responsible to the County for any damage to sidewalks and/or road curbs and gutters, concrete features and structures, together with damage to drainage facilities, removal of sod, major changes to lot grades that result in ponding of water, or other damage to roadway and other public infrastructure facilities caused by you or your contractor, subcontractors, agents or representatives in the construction and/or improvement of the building and lot for which this permit is issued. No certificate of occupancy will be issued until all corrective work to these public infrastructures and facilities has been corrected.

WARNING TO OWNER: YOUR FAILURE TO RECORD A NOTICE OF COMMENCMENT MAY RESULT IN YOU PAYING TWICE FOR IMPROVEMENTS TO YOUR PROPERTY. A NOTICE OF COMMENCEMENT MUST BE RECORDED AND POSTED ON THE JOB SITE BEFORE THE FIRST INSPECTION. IF YOU INTEND TO OBTAIN FINANCING, CONSULT WITH YOUR LENDER OR ATTORNEY BEFORE RECORDING YOUR NOTICE OF COMMENCEMENT.

OWNERS CERTIFICATION: I CERTIFY THAT ALL THE FOREGOING INFORMATION IS ACCURATE AND THAT ALL WORK WILL BE DONE IN COMPLIANCE WITH ALL APPLICABLE LAWS REGULATING CONSTRUCTION AND ZONING.

NOTICE TO OWNER: There are some properties that may have deed restrictions recorded upon them. These restrictions may limit or prohibit the work applied for in your building permit. You must verify if your property is encumbered by any restrictions or face possible litigation and or fines.

NOTARY PUBLIC-STATE OF FLORIDA
Linda R. Roder
Commission #DD755608
Expires: MAR. 24, 2012
BONDED THRU ATLANTIC BONDING CO., INC.

(Owners Must Sign All Applications Before Permit Issuance.)

Owners Signature ****OWNER BUILDERS MUST PERSONALLY APPEAR AND SIGN THE BUILDING PERMIT.**

CONTRACTORS AFFIDAVIT: By my signature I understand and agree that I have informed and provided this written statement to the owner of all the above written responsibilities in Columbia County for obtaining this Building Permit including all application and permit time limitations.

Contractor's Signature (Permitee)

Contractor's License Number_____
Columbia County
Competency Card Number_____

Affirmed under penalty of perjury to by the Contractor and subscribed before me this 25 **day of** April **20** 11

Personally known____ **or Produced Identification**_____

State of Florida Notary Signature (For the Contractor)

SEAL:

NOTARY PUBLIC-STATE OF FLORIDA
Linda R. Roder
Commission #DD755608
Expires: MAR. 24, 2012
BONDED THRU ATLANTIC BONDING CO., INC.

$ 329.80

Columbia County Building Permit Application

For Office Use Only Application # 1104-65 Date Received 4/27 By JW Permit # 29461
Zoning Official BLK Date 06.05.11 Flood Zone X Land Use A-3 Zoning A-3
FEMA Map # N/A Elevation N/A MFE 1' above Rd River N/A Plans Examiner J.C. Date 5-6
Comments
☑ NOC ☑ EH ☑ Deed or PA ☑ Site Plan ☐ State Road Info ☐ Parent Parcel # VF Form ☑
☐ Dev Permit # ☐ In Floodway ☐ Letter of Auth. from Contractor ☐ F W Comp. letter
IMPACT FEES: EMS Fire Corr Road/Code * EXISTING WELL
School = TOTAL ∅ N/A Suspended ☑ APPAL FEE

Septic Permit No. 11-0232E
dropped off by Linda Roden
Name Authorized Person Signing Permit Lance Pound Fax call (305) 484-2621 Phone
Address 16740 SW 300 St Homestead FL 33030
Owners Name Thomas L. Pound + Elizabeth A. Pound Phone (305) 484-2621
911 Address 315 SW Stillview Glen ~~Lake City FL~~ Fort White 32038
Contractors Name Owner Builder Thomas L. Pound Phone (305) 484-2621
Address 16740 SW 300 St. Homestead, FL 33030
Fee Simple Owner Name & Address NA
Bonding Co. Name & Address NA
Architect/Engineer Name & Address Will Myers / Nick Geisler
Mortgage Lenders Name & Address NA
Circle the correct power company - FL Power & Light - (Clay Elec.) - Suwannee Valley Elec. - Progress En
Property ID Number 11-65-16-03815-117 Estimated Cost of Construction 22,000
Subdivision Name Cardinal Farms Lot 17 Block Unit Phase
Driving Directions SR 47 South, Turn L on Herlong Rd, Turn R on Skyline, Turn L on Stillview Glen, at end on left
Number of Existing Dwellings on Property 0
Construction of Single family dwelling applied 4 culvert 3.10.16 Total Acreage 10.01 Lot Size 9C 10.01
Do you need a - Culvert Permit or Culvert Waiver or (Have an Existing Drive) Total Building Height 22'-1
Actual Distance of Structure from Property Lines - Front ~~400'~~ Side ~~231'~~ Side ~~300'~~ Rear ~~330'~~
Number of Stories 2 Heated Floor Area 502 Total Floor Area 979 Roof Pitch 12-1

Application is hereby made to obtain a permit to do work and installations as indicated. I certify that no work or installation has commenced prior to the issuance of a permit and that all work be performed to meet the standa of all laws regulating construction in this jurisdiction. JW Left message for Lance 5.6.11

Mr. Pound returned call & spoke w/ Jason 5-6-11

Notice of Treatment

ADDTO 15818

Applicator: Florida Pest Control & Chemical Co. (www.flapest .com)
Address: 536 SE Baya Ave
City Lake City, FL Phone 752-1703

Site Location: Subdivision
Lot # 17 Block# Permit # 29461
Address 315 SW STILLwell Blvd

Product used	Active Ingredient	% Concentration
☑ Premise	Imidacloprid	0.1%
☐ Termidor	Fipronil	0.12%
☐ Bora-Care	Disodium Octaborate Tetrahydrate	23.0%

Type treatment: ☑ Soil ☐ Wood

Area Treated	Square feet	Linear feet	Gallons Applied
FOOTERS	N/A	173	40

As per Florida Building Code 104.2.6 – If soil chemical barrier method for termite prevention is used, final exterior treatment shall be completed prior to final building approval.

If this notice is for the final exterior treatment, initial this line _____.

7-8-11	1400	James D. Parker
Date	Time	Print Technician's Name

F254

Remarks:

Applicator - White Permit File - Canary Permit Holder - Pink

10/05 ©

DW Pest Control, Inc.

13618 NW 270th Ave.
Alachua, FL 32615
(386) 418-4387
dwpest@windstream.net

#29461

NOTICE OF TREATMENT

Date 9/08/11 Time 8:00

Treatment Address 1136 Marynik Dr.
Hbg. 32643
Subdivision River Rise
Lot # 30

Type of Treatment: (Soil) or Wood

Square Feet 3240 Linear Feet 260

Chemical Dominion 2 .05 %

Gallons Applied 458

Area Treated Main Slab

Remarks

Technician

Per Florida Building Code 104.2.6 – If soil chemical barrier method for termite prevention is used, final exterior treatment shall be completed prior to final building approval.

DW Pest – White Permit File – Yellow Permit Holder - Pink