12/01/2006

# Columbia County Building Permit

**This Permit Expires One Year From the Date of Issue**

**PERMIT**
**000025267**

APPLICANT DREW JACKSON PHONE 352 208-8821

ADDRESS 545 FAIRWAY DRIVE OCALA FL 34472

OWNER GEORGE BOHLMANN PHONE 352 376-6230

ADDRESS 122 SW GREENWOOD TERR FT. WHITE FL 32038

CONTRACTOR GEORGE BOHLMANN PHONE 352 376-6230

LOCATION OF PROPERTY 47S, TL ON 27, TL ON CR 18, TL ON GREENWOOD TERR., 1ST LOT ON LEFT

TYPE DEVELOPMENT SFD,UTILITY ESTIMATED COST OF CONSTRUCTION 122650.00

HEATED FLOOR AREA 2453.00 TOTAL AREA 3296.00 HEIGHT ____ STORIES 1

FOUNDATION CONC WALLS FRAMED ROOF PITCH 6/12 FLOOR SLAB

LAND USE & ZONING FT. WHITE MAX. HEIGHT 8

Minimum Set Back Requirments: STREET-FRONT ____ REAR ____ SIDE ____

NO. EX.D.U. 0 FLOOD ZONE FW DEVELOPMENT PERMIT NO. ____

PARCEL ID 34-6S-16-04056-137 SUBDIVISION THORNWOOD

LOT 37 BLOCK ____ PHASE ____ UNIT ____ TOTAL ACRES ____

| Culvert Permit No. | Culvert Waiver | Contractor's License Number | Applicant/Owner/Contractor | |
|---|---|---|---|---|
| FT. WHITE | 06-0736 | BK | JH | Y |
| Driveway Connection | Septic Tank Number | LU & Zoning checked by | Approved for Issuance | New Resident |

COMMENTS: FT. WHITE LETTER ON FILE, NOC ON FILE

Check # or Cash 2129

## FOR BUILDING & ZONING DEPARTMENT ONLY

(footer/Slab)

Temporary Power ____ date/app. by Foundation ____ date/app. by Monolithic ____ date/app. by

Under slab rough-in plumbing ____ date/app. by Slab ____ date/app. by Sheathing/Nailing ____ date/app. by

Framing ____ date/app. by Rough-in plumbing above slab and below wood floor ____ date/app. by

Electrical rough-in ____ date/app. by Heat & Air Duct ____ date/app. by Peri. beam (Lintel) ____ date/app. by

Permanent power ____ date/app. by C.O. Final ____ date/app. by Culvert ____ date/app. by

M/H tie downs, blocking, electricity and plumbing ____ date/app. by Pool ____ date/app. by

Reconnection ____ date/app. by Pump pole ____ date/app. by Utility Pole ____ date/app. by

M/H Pole ____ date/app. by Travel Trailer ____ date/app. by Re-roof ____ date/app. by

BUILDING PERMIT FEE $ 615.00 CERTIFICATION FEE $ 16.48 SURCHARGE FEE $ 16.48

MISC. FEES $ 0.00 ZONING CERT. FEE $ ____ FIRE FEE $ 0.00 WASTE FEE $ ____

FLOOD DEVELOPMENT FEE $ ____ FLOOD ZONE FEE $ ____ CULVERT FEE $ ____ **TOTAL FEE** 647.96

INSPECTORS OFFICE ____ CLERKS OFFICE CH

NOTICE: IN ADDITION TO THE REQUIREMENTS OF THIS PERMIT, THERE MAY BE ADDITIONAL RESTRICTIONS APPLICABLE TO THIS PROPERTY THAT MAY BE FOUND IN THE PUBLIC RECORDS OF THIS COUNTY. AND THERE MAY BE ADDITIONAL PERMITS REQUIRED FROM OTHER GOVERNMENTAL ENTITIES SUCH AS WATER MANAGEMENT DISTRICTS, STATE AGENCIES, OR FEDERAL AGENCIES.

**"WARNING TO OWNER: YOUR FAILURE TO RECORD A NOTICE OF COMMENCEMENT MAY RESULT IN YOUR PAYING TWICE FOR IMPROVEMENTS TO YOUR PROPERTY. IF YOU INTEND TO OBTAIN FINANCING, CONSULT WITH YOUR LENDER OR AN ATTORNEY BEFORE RECORDING YOUR NOTICE OF COMMENCEMENT."**

**This Permit Must Be Prominently Posted on Premises During Construction**

PLEASE NOTIFY THE COLUMBIA COUNTY BUILDING DEPARTMENT AT LEAST 24 HOURS IN ADVANCE OF EACH INSPECTION, IN ORDER THAT IT MAY BE MADE WITHOUT DELAY OR INCONVIENCE, PHONE 758-1008. THIS PERMIT IS NOT VALID UNLESS THE WORK AUTHORIZED BY IT IS COMMENCED WITHIN 6 MONTHS AFTER ISSUANCE.

The Issuance of this Permit Does Not Waive Compliance by Permittee with Deed Restrictions.

CK# 2129 877-1137 left message 11/14/06

# Columbia County Building Permit Application

Revised 9-23-04

For Office Use Only Application # 0608-63 Date Received 8/17/06 By LT Permit # 25267

Application Approved by - Zoning Official _____ Date _____ Plans Examiner OKJH Date 11-14-06

Flood Zone _____ Development Permit _____ Zoning _____ Land Use Plan Map Category _____

Comments Town of Fort White letter submitted

EH

Drew Jackson - 873-1138

Applicants Name Susan & George Bohlmann Phone 352-376-6230

Address 3826 N.W. 26th Street, Gainesville, FL 32605

Owners Name Susan & George Bohlmann Phone 352-376-6230

911 Address 122 SW. Greenwood Terrace, Ft. White 32038

Contractors Name Homes by Whittaker, Inc. Phone 352-873-1343

Address P.O. Box 771149, Ocala, FL 34477

Fee Simple Owner Name & Address _____

Bonding Co. Name & Address _____

Architect/Engineer Name & Address G. Davis John Whittaker P.O. Box 771149 Ocala, FL 34477

Mortgage Lenders Name & Address _____

Circle the correct power company – FL Power & Light – (Clay Elec.) – Suwannee Valley Elec. – Progressive Energy

Property ID Number R04056-137 34-6S-16 Estimated Cost of Construction $212,665

Subdivision Name Thornwood Lot 37 Block ____ Unit ____ Phase ____

Driving Directions I75N to exit 399 (Alachua/High Springs) bear right off exit, swing onto 27, T/R C.R. 18 to Thornwood - corner lot C.R. 18 & SW Greenwood Terrace

Type of Construction SFR-Block Number of Existing Dwellings on Property 0

Total Acreage 1.25 Lot Size 1.25 Do you need a - Culvert Permit or Culvert Waiver or Have an Existing Drive

Formerly GR AV

Actual Distance of Structure from Property Lines - Front 50' Side 41.25' Side 37.5' Rear 240'

Total Building Height 8' Number of Stories 1 Heated Floor Area 2453 TOTAL 3296 Roof Pitch 6/12

Application is hereby made to obtain a permit to do work and installations as indicated. I certify that no work or installation has commenced prior to the issuance of a permit and that all work be performed to meet the standards of all laws regulating construction in this jurisdiction.

OWNERS AFFIDAVIT: I hereby certify that all the foregoing information is accurate and all work will be done in compliance with all applicable laws and regulating construction and zoning.

WARNING TO OWNER: YOUR FAILURE TO RECORD A NOTICE OF COMMENCMENT MAY RESULT IN YOU PAYING TWICE FOR IMPROVEMENTS TO YOUR PROPERTY. IF YOU INTEND TO OBTAIN FINANCING, CONSULT WITH YOUR LENDER OR ATTORNEY BEFORE RECORDING YOUR NOTICE OF COMMENCEMENT.

Sue McCall
Owner Builder or Agent (Including Contractor)

John Whittaker
Contractor Signature
Contractors License Number CGC011962
Competency Card Number _____
NOTARY STAMP/SEAL

STATE OF FLORIDA
COUNTY OF COLUMBIA

Sworn to (or affirmed) and subscribed before me this 17th day of August 2006.

Personally known X or Produced Identification _____

Notary Signature

SHIRLEY J. McMATH
Comm# DD0525809
Expires 2/6/2010
Bonded thru (800)432-4254
Florida Notary Assn., Inc

# Town of Fort White

Post Office Box 129 Fort White, Florida 32038-0129
Town Hall - (386) 497-2321 • Public Works - (386) 497-3345
Email: townofftwhite@alltel.com • Web site: Townoffortwhitefl.com

## CERTIFICATE OF COMPLIANCE & REQUEST FOR ISSUANCE OF BUILDING PERMIT

The undersigned hereby certify the following property is in compliance with the Town of Fort White's Comprehensive Plan and Land Development Regulations for the stated development purposes:

OWNER'S NAME: Bohlmann, George

ADDRESS: 3826 NW 26th St. Gainesville, FL 32605

PROPERTY DESCRIPTION: Lot #37 Parcel #4056-137
(parcel number if possible) 1.25 Ac. Thornwood Subdivision

DEVELOPMENT: Single Family Dwelling with outside storage building E Hudson

You are hereby authorized to issue the appropriate building permits.

09 August 2006
DATE

Janis E. Rewels (RA)
LAND DEVELOPMENT REGULATION
ADMINISTRATOR
TOWN OF FORT WHITE

* This compliance is being issued for both the home and the storage building. The owner has satisfactorily met the Town of Fort White requirements.

854-
6337

| District #1 | District #2 | District #3 | District #4 | Mayor |
|---|---|---|---|---|
| Donald Cook | Henry Maini | John Gloskowski | Demetric Jackson | Truett George |
| 497-1086 | 497-2992 | 497-3999 | 497-2078 | 497-4741 |

# COLUMBIA COUNTY 9-1-1 ADDRESSING

P. O. Box 1787, Lake City, FL 32056-1787
PHONE: (386) 758-1125 * FAX: (386) 758-1365 * Email: ron_croft@columbiacountyfla.com

## Addressing Maintenance

To maintain the Countywide Addressing Policy you must make application for a 9-1-1 Address at the time you apply for a building permit. The established standards for assigning and posting numbers to all principal buildings, dwellings, businesses and industries are contained in Columbia County Ordinance 2001-9. The addressing system is to enable Emergency Service Agencies to locate you in an emergency, and to assist the United States Postal Service and the public in the timely and efficient provision of services to residents and businesses of Columbia County.

**DATE REQUESTED:** 8/9/2006 **DATE ISSUED:** 8/14/2006

**ENHANCED 9-1-1 ADDRESS:**

122 SW GREENWOOD TER
FORT WHITE FL 32038

**PROPERTY APPRAISER PARCEL NUMBER:**

34-6S-16-04056-137

**Remarks:**

LOCATED ON LOT 37 THORNWOOD S/D

**Address Issued By:** _____
Columbia County 9-1-1 Addressing / GIS Department

***NOTICE: THIS ADDRESS WAS ISSUED BASED ON LOCATION INFORMATION RECEIVED FROM THE REQUESTER. SHOULD, AT A LATER DATE, THE LOCATION INFORMATION BE FOUND TO BE IN ERROR, THIS ADDRESS IS SUBJECT TO CHANGE.***

372

From GEORGE Bohlmann
352- 376-6230

RETURN TO
Charles A. Williams, Jr
5800 N.W. 39th Ave., Suite 102
Gainesville, FL 32606-5866

# NOTICE OF COMMENCEMENT

STATE OF FLORIDA
COUNTY OF COLUMBIA

LOAN NO. 3015871

THE UNDERSIGNED HEREBY INFORMS ALL CONCERNED THAT IMPROVEMENTS WILL BE MADE TO CERTAIN REAL PROPERTY AND, IN ACCORDANCE WITH SECTION 713.13 OF THE FLORIDA STATUTES, THE FOLLOWING INFORMATION IS STATED IN THE NOTICE OF COMMENCEMENT. THIS NOTICE IS VOID AND OF NO FORCE AND EFFECT IF CONSTRUCTION IS NOT COMMENCED WITHIN (90) DAYS OF RECORDATION.

1. **PROPERTY DESCRIPTION**
   A. Street Address or Location Description:
   XXX SOUTHWEST GREENWOOD TERRACE
   FORT WHITE, FLORIDA 32038
   B. Legal Description:
   LOT 37 OF THORNWOOD, ACCORDING TO THE MAP OR PLAT THEREOF RECORDED IN PLAT BOOK 7, PAGES 202, 203 AND 204, OF THE PUBLIC RECORDS OF COLUMBIA COUNTY, FLORIDA.

2. **GENERAL DESCRIPTION OF IMPROVEMENTS:**
   CONSTRUCTION OF SINGLE FAMILY DWELLING

3. A. **OWNER INFORMATION NAME AND ADDRESS:**
   Name: GEORGE BOHLMANN and SUSAN M. BOHLMANN
   Address: 5925 SW 140th Avenue, Gainesville, FL 32605

   B. **OWNER'S INTEREST IN THE SITE OF IMPROVEMENT IS:** FEE SIMPLE

   C. **NAME AND ADDRESS OF FEE SIMPLE TITLEHOLDER (IF OTHER THAN OWNER)**
   Name:
   Address:

4. **NAME AND ADDRESS OF CONTRACTOR:**
   Name: HOMES BY WHITTAKER, INC.
   Address: 6913 Southwest Highway 200, Ocala, FL 34474
   Phone Number: (352) 873-1123 Fax Number: _____

5. **SURETY (IF ANY):**
   Name:
   Address:
   Amount of Bond:

6. **LENDER MAKING CONSTRUCTION LOAN:**
   Name: CAMPUS USA CREDIT UNION
   Address: 2511 NORTHWEST 41ST STREET
   GAINESVILLE, FLORIDA 32606

7. **PERSON DESIGNATED BY OWNER UPON WHOM NOTICES OR OTHER DOCUMENTS MAY BE SERVED AS PROVIDED BY SECTION 713.13 (1) (a) FLORIDA STATUTES:**
   Name:
   Address:

   Phone Number: _____ Fax Number: _____

Inst:2006015844 Date:07/03/2006 Time:11:08
DC,P.DeWitt Cason,Columbia County B:1088 P:1811

21600-01 (04/04/01)

Bohlmann Post-it® Fax Note 7671 Date 7/20 # of pages ▶ 3
To Sue Wagnell From Thomas Williams
Co./Dept. Williams Co. Co.
Phone # Phone # 352-377-6111
Fax # 352-873-1323 Fax # 352-377-6118

8. OWNER DESIGNATES THE FOLLOWING PERSON IN ADDITION TO HIMSELF TO RECEIVE A COPY OF THE LIENORS NOTICE AS PROVIDED IN SECTION 713.13 (1) (b), FLORIDA STATUTES:
   Name: CAMPUS USA CREDIT UNION
   Address: 2511 NORTHWEST 41ST STREET
   GAINESVILLE, FLORIDA 32606
   Attn:

9. EXPIRATION DATE OF NOTICE OF COMMENCEMENT (THE EXPIRATION DATE IS 1 YEAR FROM THE DATE OF RECORDING UNLESS A DIFFERENT DATE IS SPECIFIED.)

WITNESS Kelley D. Jones

WITNESS Colleen S. Dice

OWNER GEORGE BOHLMANN

OWNER SUSAN M. BOHLMANN

OWNER

OWNER

OWNER

OWNER

STATE OF FLORIDA, COUNTY OF COLUMBIA
I HEREBY CERTIFY, that the above and foregoing is a true copy of the original filed in this office.
P. DeWITT CASON, CLERK OF COURTS
By Deputy Clerk
Date

State of Florida ALACHUA

The following instrument was acknowledged before me this June 27, 2006 by GEORGE BOHLMANN and SUSAN M. BOHLMANN

who is personally known to me or who has produced driver's license as identification and who did take an oath.

NOTARY PUBLIC (Seal) MY COMMISSION EXPIRES:

Inst:2006015844 Date:07/03/2006 Time:11:08
DC,P.DeWitt Cason,Columbia County B:1088 P:1812

21500-02 (04/04/01)

B 50
384.30
702.80

Inst:2005029075 Date:11/22/2005 Time:12:47
Doc Stamp-Deed : 384.30
B DC,P.DeWitt Cason,Columbia County B:1065 P:2312

Prepared by and return to:
**Kelley D. Jones**
**Attorney at Law**
**Kelley D. Jones, P.A.**
**5800 N.W. 39th Avenue Ste 102**
**Gainesville, FL 32606**
**352-377-2004**
File Number: **05-337**

[Space Above This Line For Recording Data]

# Warranty Deed

**This Warranty Deed** made this **17th** day of **November, 2005** between **Image Development Group, LLC, a Florida Limited Liability Corporation** whose post office address is **20074 N.W. 258th Drive, High Springs, FL 32643**, grantor, and **George Bohlmann and Susan M. Bohlmann, husband and wife** whose post office address is **5925 S.W. 140th Avenue, Ocala, FL 34481**, grantee:

(Whenever used herein the terms "grantor" and "grantee" include all the parties to this instrument and the heirs, legal representatives, and assigns of individuals, and the successors and assigns of corporations, trusts and trustees)

**Witnesseth**, that said grantor, for and in consideration of the sum of TEN AND NO/100 DOLLARS ($10.00) and other good and valuable considerations to said grantor in hand paid by said grantee, the receipt whereof is hereby acknowledged, has granted, bargained, and sold to the said grantee, and grantee's heirs and assigns forever, the following described land, situate, lying and being in **Columbia County, Florida** to-wit:

> **Lot 37 of Thornwood, according to the map or plat thereof as recorded in Plat Book 7, Pages 202, 203 and 204, Public Records of Columbia County, Florida.**
>
> **Parcel Identification Number: R04056-137**
>
> **Subject to taxes for 2005 and subsequent years; covenants, conditions, restrictions, easements, reservations and limitations of record, if any.**

**Together** with all the tenements, hereditaments and appurtenances thereto belonging or in anywise appertaining.

**To Have and to Hold**, the same in fee simple forever.

**And** the grantor hereby covenants with said grantee that the grantor is lawfully seized of said land in fee simple; that the grantor has good right and lawful authority to sell and convey said land; that the grantor hereby fully warrants the title to said land and will defend the same against the lawful claims of all persons whomsoever; and that said land is free of all encumbrances, except taxes accruing subsequent to **December 31, 2004**.

**In Witness Whereof**, grantor has hereunto set grantor's hand and seal the day and year first above written.

Inst:2005029075 Date:11/22/2005 Time:12:47
Doc Stamp-Deed : 384.30
DC,P.DeWitt Cason,Columbia County B:1065 P:2313

Signed, sealed and delivered in our presence:

Image Development Group, LLC, a Florida Limited Liability Corporation

By: _____
Richard C. Parker, Managing Member

Witness Name: Penny J Saier

Witness Name: Kelley D. Jones

State of Florida
County of Alachua

The foregoing instrument was acknowledged before me this 17th day of November, 2005 by Richard C. Parker, Managing Member of Image Development Group, LLC, a Florida Limited Liability Corporation, on behalf of said firm. He/she [ ] is personally known or [X] has produced a driver's license as identification.

[Notary Seal]

KELLEY D. JONES
MY COMMISSION # DD 343845
EXPIRES: August 20, 2008
Bonded Thru Notary Public Underwriters

Notary Public

Printed Name: _____

My Commission Expires: _____



DoubleTime®

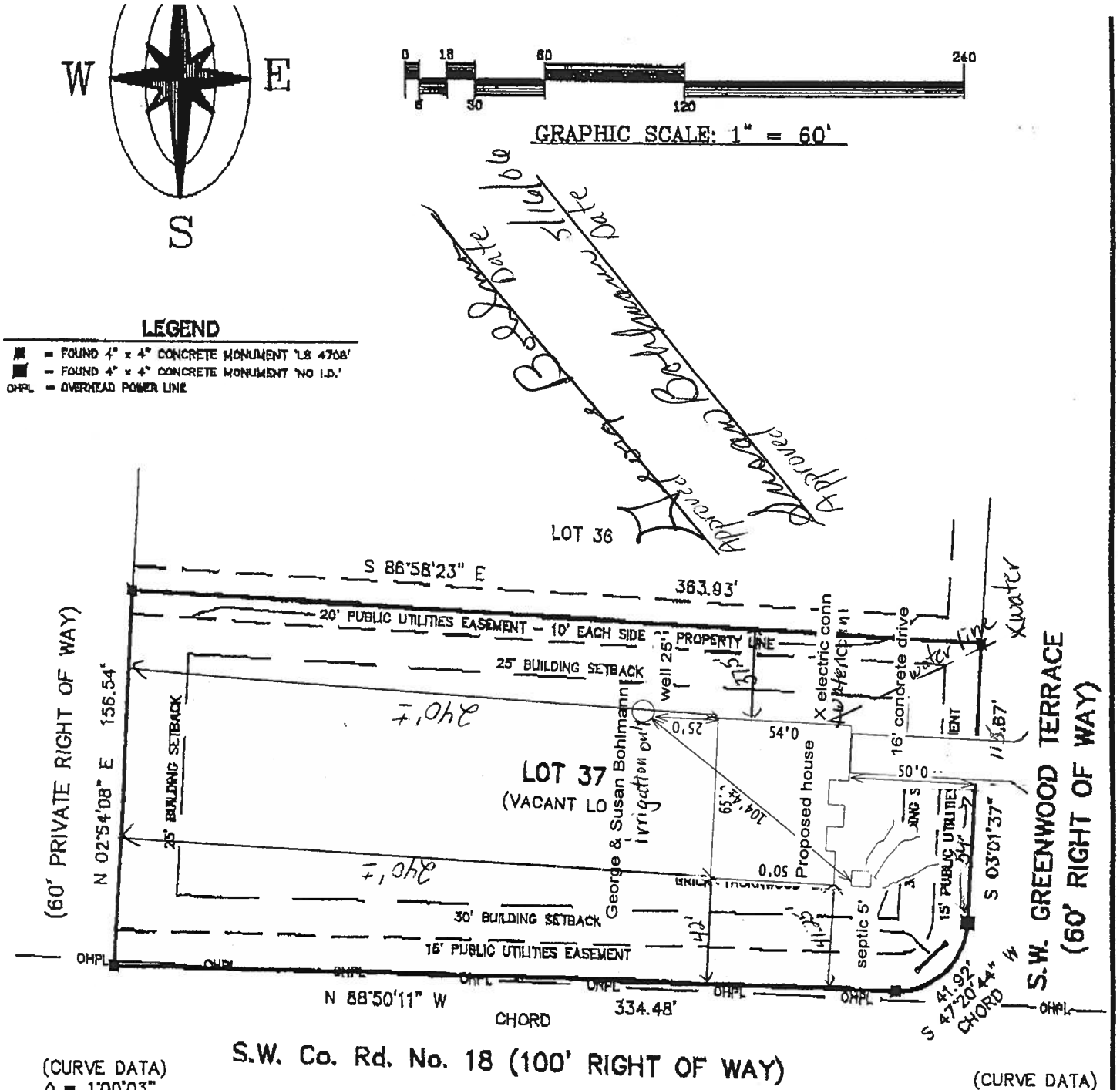
W
E
S
0 18 60 240
6 30 120
GRAPHIC SCALE: 1" = 60'
LEGEND
= FOUND 4" x 4" CONCRETE MONUMENT 'LS 4708'
= FOUND 4" x 4" CONCRETE MONUMENT 'NO I.D.'
OHPL = OVERHEAD POWER LINE
LOT 36
S 86°58'23" E
363.93'
20' PUBLIC UTILITIES EASEMENT – 10' EACH SIDE
PROPERTY LINE
25' BUILDING SETBACK
25' BUILDING SETBACK
(60' PRIVATE RIGHT OF WAY)
N 02°54'08" E 156.54'
LOT 37
(VACANT LO
George & Susan Bohlmann
Irrigation well
well 25'
X electric conn
16' concrete drive
54'0
25'0
50'0
Proposed house
septic 5'
15' PUBLIC UTILITIES
S 03°01'37"
S.W. GREENWOOD TERRACE
(60' RIGHT OF WAY)
30' BUILDING SETBACK
15' PUBLIC UTILITIES EASEMENT
OHPL
N 88°50'11" W
334.48'
CHORD
S 47°20'44" W
41.92'
CHORD
S.W. Co. Rd. No. 18 (100' RIGHT OF WAY)
(CURVE DATA)
Δ = 1°00'03"
R = 19148.60'
T = 167.25'
L = 334.48'
(CURVE DATA)
Δ = 88°38'13"
R = 30.00'
T = 29.29'
L = 46.41'

STATE OF FLORIDA
DEPARTMENT OF HEALTH

APPLICATION FOR ONSITE SEWAGE DISPOSAL SYSTEM CONSTRUCTION PERMIT

Permit Application Number Oc-0736

Bockmann

PART II - SITE PLAN

Scale: Each block represents 5 feet and 1 inch = 50 feet.

See attached

Notes:

11-13-06

Site Plan submitted by: [signature] Signature — Agent Title

Plan Approved X Not Approved ____ Date 11/13/06

By Sabie Gaddy ES11 County Health Department

**ALL CHANGES MUST BE APPROVED BY THE COUNTY HEALTH DEPARTMENT**

DH 4015, 10/96 (Replaces HRS-H Form 4015 which may be used)
(Stock Number: 5744-002-4015-6)

lly G.
modified 11/27/06 (septic)
per Dolly
386-758-2187

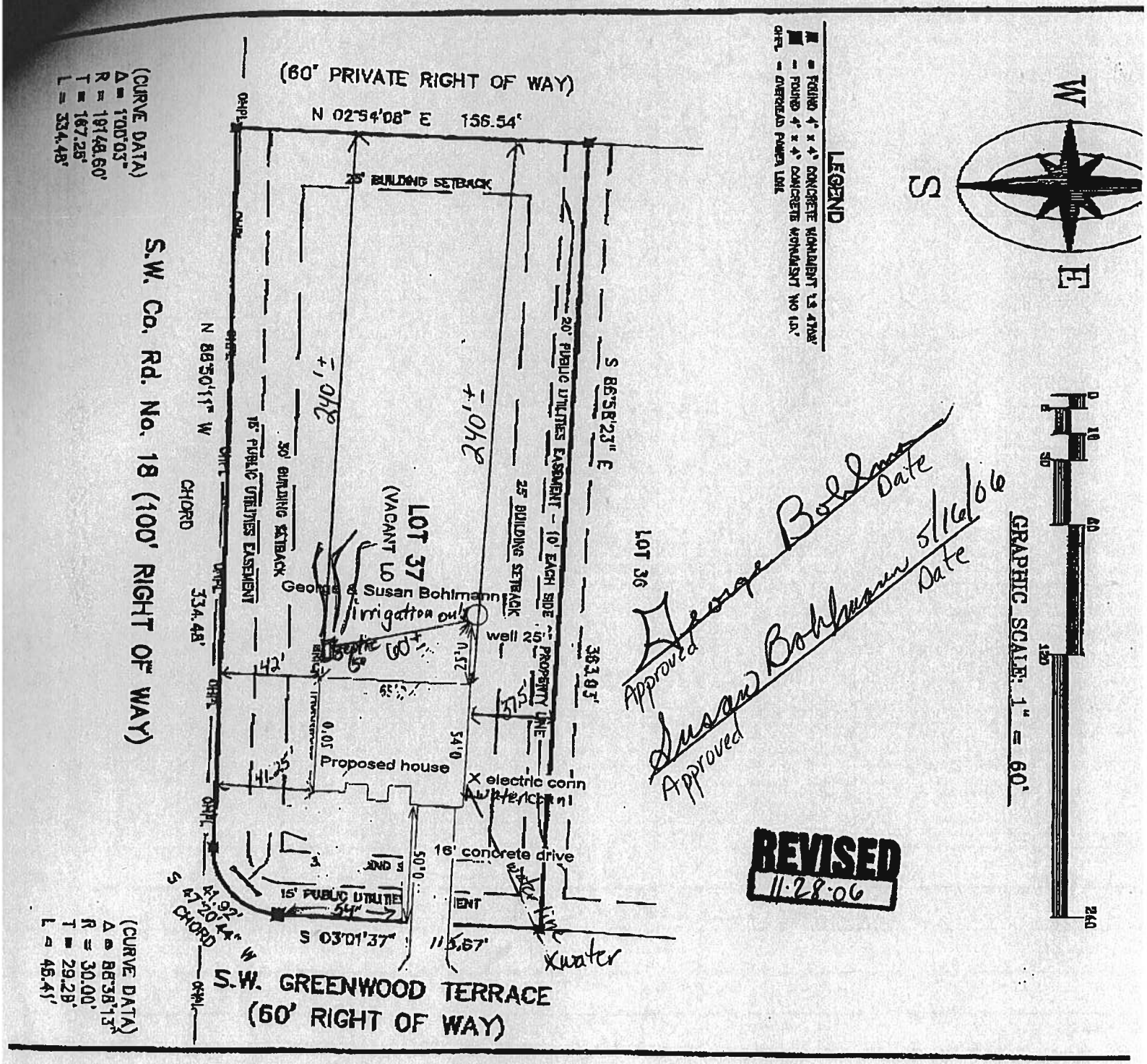


FAXED
11-28-06

S171

EnergyGauge® 4.0

FORM 600A-2004

# FLORIDA ENERGY EFFICIENCY CODE FOR BUILDING CONSTRUCTION

Florida Department of Community Affairs

## Residential Whole Building Performance Method A

| | | | |
|---|---|---|---|
| Project Name: | BOHLMANN RES. #2105 | Builder: | HOMES BY WHITTAKER |
| Address: | SW Greenwood Terrace | Permitting Office: | Columbia |
| City, State: | Fort White, FL 32038 | Permit Number: | 25267. |
| Owner: | George & Susan Bohlmann | Jurisdiction Number: | 221000 |
| Climate Zone: | North | | |

| | | |
|---|---|---|
| 1. New construction or existing | New | — |
| 2. Single family or multi-family | Single family | — |
| 3. Number of units, if multi-family | 1 | — |
| 4. Number of Bedrooms | 4 | — |
| 5. Is this a worst case? | Yes | — |
| 6. Conditioned floor area (ft²) | 2453 ft² | — |
| 7. Glass type[1] and area: (Label reqd. by 13-104.4.5 if not default) | | |
| a. U-factor: (or Single or Double DEFAULT) | Description Area 7a. (Dble Default) 277.0 ft² | — |
| b. SHGC: (or Clear or Tint DEFAULT) | 7b. (Clear) 277.0 ft² | — |
| 8. Floor types | | |
| a. Slab-On-Grade Edge Insulation | R=0.0, 253.0(p) ft | — |
| b. N/A | | — |
| c. N/A | | — |
| 9. Wall types | | |
| a. Frame, Wood, Adjacent | R=11.0, 192.0 ft² | — |
| b. Concrete, Ext Insul, Exterior | R=4.1, 1415.0 ft² | — |
| c. Concrete, Int Insul, Adjacent | R=4.1, 140.0 ft² | — |
| d. N/A | | — |
| e. N/A | | — |
| 10. Ceiling types | | — |
| a. Under Attic | R=30.0, 2453.0 ft² | |
| b. Under Attic | R=30.0, 286.0 ft² | — |
| c. N/A | | — |
| 11. Ducts | | — |
| a. Sup: Uns. Ret: Unc. AH: Garage | Sup. R=6.0, 148.0 ft | |
| b. N/A | | — |
| | | — |

| | | |
|---|---|---|
| 12. Cooling systems | | |
| a. Central Unit | Cap: 60.0 kBtu/hr | — |
| | SEER: 13.00 | — |
| b. N/A | | — |
| | | — |
| c. N/A | | — |
| | | — |
| 13. Heating systems | | |
| a. Electric Heat Pump | Cap: 60.0 kBtu/hr | — |
| | HSPF: 8.50 | — |
| b. N/A | | — |
| | | — |
| c. N/A | | — |
| | | — |
| 14. Hot water systems | | |
| a. Electric Resistance | Cap: 66.0 gallons | — |
| | EF: 0.90 | — |
| b. N/A | | — |
| | | — |
| c. Conservation credits (HR-Heat recovery, Solar DHP-Dedicated heat pump) | | — |
| 15. HVAC credits (CF-Ceiling fan, CV-Cross ventilation, HF-Whole house fan, PT-Programmable Thermostat, MZ-C-Multizone cooling, MZ-H-Multizone heating) | | — |

Glass/Floor Area: 0.11

Total as-built points: 32485
Total base points: 37068

**PASS**

I hereby certify that the plans and specifications covered by this calculation are in compliance with the Florida Energy Code.

PREPARED BY: SUNCOAST INSULATORS Ocala (352) 625-6167 Homosassa (352) 422-5595 Spring Hill/Hudson (352) 796-2858 Lake City (352) 243-7939

DATE: 6-5-06

I hereby certify that this building, as designed is in compliance with the Florida Energy Code.

OWNER/AGENT: Sue McCall

DATE: 5/24/06

Review of the plans and specifications covered by this calculation indicates compliance with the Florida Energy Code. Before construction is completed this building will be inspected for compliance with Section 553.908 Florida Statutes.

GREAT SEAL OF THE STATE OF FLORIDA — IN GOD WE TRUST

BUILDING OFFICIAL: _____

DATE: _____

1 Predominant glass type. For actual glass type and areas, see Summer & Winter Glass output on pages 2&4.

FORM 600A-2004 EnergyGauge® 4.0

# SUMMER CALCULATIONS

## Residential Whole Building Performance Method A - Details

ADDRESS: , , , PERMIT #:

### BASE

**GLASS TYPES**

| .18 X Conditioned Floor Area | X BSPM | = Points |
|---|---|---|
| .18 2453.0 | 20.04 | 8848.8 |

**WALL TYPES**

| | Area | X BSPM | = Points |
|---|---|---|---|
| Adjacent | 332.0 | 0.70 | 232.4 |
| Exterior | 1415.0 | 1.70 | 2405.5 |
| Base Total: | 1747.0 | | 2637.9 |

**DOOR TYPES**

| | Area | X BSPM | = Points |
|---|---|---|---|
| Adjacent | 18.0 | 2.40 | 43.2 |
| Exterior | 114.0 | 6.10 | 695.4 |
| Base Total: | 132.0 | | 738.6 |

**CEILING TYPES**

| | Area | X BSPM | = Points |
|---|---|---|---|
| Under Attic | 2739.0 | 1.73 | 4738.5 |
| Base Total: | 2739.0 | | 4738.5 |

**FLOOR TYPES**

| | Area | X BSPM | = Points |
|---|---|---|---|
| Slab | 253.0(p) | -37.0 | -9361.0 |
| Raised | 0.0 | 0.00 | 0.0 |
| Base Total: | | | -9361.0 |

**INFILTRATION**

| Area | X BSPM | = Points |
|---|---|---|
| 2453.0 | 10.21 | 25045.1 |

### AS-BUILT

| Type/SC | Overhang Ornt | Len | Hgt | Area | X SPM | X SOF | = Points |
|---|---|---|---|---|---|---|---|
| Double, Clear | S | 2.0 | 6.0 | 10.0 | 35.8 | 0.76 | 278.3 |
| Double, Clear | W | 2.0 | 6.0 | 90.0 | 38.5 | 0.85 | 2945.0 |
| Double, Clear | E | 2.0 | 6.0 | 65.0 | 42.0 | 0.85 | 2318.6 |
| Double, Clear | E | 2.0 | 6.0 | 30.0 | 42.0 | 0.85 | 1070.1 |
| Double, Clear | N | 2.0 | 6.0 | 82.0 | 19.2 | 0.90 | 1417.1 |
| As-Built Total: | | | | 277.0 | | | 8029.2 |

| Type | R-Value | Area | X SPM | = Points |
|---|---|---|---|---|
| Frame, Wood, Adjacent | 11.0 | 192.0 | 0.70 | 134.4 |
| Concrete, Ext Insul, Exterior | 4.1 | 1415.0 | 0.63 | 898.5 |
| Concrete, Int Insul, Adjacent | 4.1 | 140.0 | 0.75 | 104.3 |
| As-Built Total: | | 1747.0 | | 1137.2 |

| Type | Area | X SPM | = Points |
|---|---|---|---|
| Exterior Insulated | 114.0 | 4.10 | 467.4 |
| Adjacent Insulated | 18.0 | 1.60 | 28.8 |
| As-Built Total: | 132.0 | | 496.2 |

| Type | R-Value | Area | X SPM | X SCM | = Points |
|---|---|---|---|---|---|
| Under Attic | 30.0 | 2453.0 | 1.73 | X 1.00 | 4243.7 |
| Under Attic | 30.0 | 286.0 | 1.73 | X 1.00 | 494.8 |
| As-Built Total: | | 2739.0 | | | 4738.5 |

| Type | R-Value | Area | X SPM | = Points |
|---|---|---|---|---|
| Slab-On-Grade Edge Insulation | 0.0 | 253.0(p | -41.20 | -10423.6 |
| As-Built Total: | | 253.0 | | -10423.6 |

| Area | X SPM | = Points |
|---|---|---|
| 2453.0 | 10.21 | 25045.1 |

FORM 600A-2004 EnergyGauge® 4.0

# SUMMER CALCULATIONS

## Residential Whole Building Performance Method A - Details

ADDRESS: , , , PERMIT #:

| BASE | | | AS-BUILT | | | | | | |
|---|---|---|---|---|---|---|---|---|---|
| Summer Base Points: 32647.6 | | | Summer As-Built Points: | | | | | | 29022.6 |
| Total Summer Points | X System Multiplier | = Cooling Points | Total Component (System - Points) | X Cap Ratio | X Duct Multiplier (DM x DSM x AHU) | X System Multiplier | X Credit Multiplier | = Cooling Points | |
| | | | (sys 1: Central Unit 60000 btuh ,SEER/EFF(13.0) Ducts:Uno(S),Uno(R),Ga (AH),R6.0(INS) | | | | | | |
| | | | 29023 | 1.00 | (1.09 x 1.147 x 1.00) | 0.263 | 1.000 | 9526.2 | |
| 32647.6 | 0.4266 | 13927.5 | 29022.6 | 1.00 | 1.250 | 0.263 | 1.000 | 9526.2 | |

FORM 600A-2004

EnergyGauge® 4.0

# WINTER CALCULATIONS

## Residential Whole Building Performance Method A - Details

ADDRESS: , , , PERMIT #:

### BASE

| GLASS TYPES .18 X Conditioned Floor Area | X BWPM | = Points |
|---|---|---|
| .18 2453.0 | 12.74 | 6625.1 |

| WALL TYPES | Area X BWPM | = Points |
|---|---|---|
| Adjacent | 332.0 3.60 | 1195.2 |
| Exterior | 1415.0 3.70 | 5235.5 |
| Base Total: | 1747.0 | 6430.7 |

| DOOR TYPES | Area X BWPM | = Points |
|---|---|---|
| Adjacent | 18.0 11.50 | 207.0 |
| Exterior | 114.0 12.30 | 1402.2 |
| Base Total: | 132.0 | 1609.2 |

| CEILING TYPES | Area X BWPM | = Points |
|---|---|---|
| Under Attic | 2739.0 2.05 | 5614.9 |
| Base Total: | 2739.0 | 5614.9 |

| FLOOR TYPES | Area X BWPM | = Points |
|---|---|---|
| Slab | 253.0(p) 8.9 | 2251.7 |
| Raised | 0.0 0.00 | 0.0 |
| Base Total: | | 2251.7 |

| INFILTRATION | Area X BWPM | = Points |
|---|---|---|
| | 2453.0 -0.59 | -1447.3 |

### AS-BUILT

| Type/SC | Overhang Ornt | Len | Hgt | Area X | WPM X | WOF | = Points |
|---|---|---|---|---|---|---|---|
| Double, Clear | S | 2.0 | 6.0 | 10.0 | 13.30 | 1.26 | 167.3 |
| Double, Clear | W | 2.0 | 6.0 | 90.0 | 20.70 | 1.04 | 1945.2 |
| Double, Clear | E | 2.0 | 6.0 | 65.0 | 18.70 | 1.06 | 1295.5 |
| Double, Clear | E | 2.0 | 6.0 | 30.0 | 18.70 | 1.06 | 597.9 |
| Double, Clear | N | 2.0 | 6.0 | 82.0 | 24.50 | 1.00 | 2024.8 |
| As-Built Total: | | | | 277.0 | | | 6030.8 |

| Type | R-Value | Area X | W/PM | = Points |
|---|---|---|---|---|
| Frame, Wood, Adjacent | 11.0 | 192.0 | 3.60 | 691.2 |
| Concrete, Ext Insul, Exterior | 4.1 | 1415.0 | 4.89 | 6912.3 |
| Concrete, Int Insul, Adjacent | 4.1 | 140.0 | 4.61 | 644.7 |
| As-Built Total: | | 1747.0 | | 8248.2 |

| Type | Area X | W/PM | = Points |
|---|---|---|---|
| Exterior Insulated | 114.0 | 8.40 | 957.6 |
| Adjacent Insulated | 18.0 | 8.00 | 144.0 |
| As-Built Total: | 132.0 | | 1101.6 |

| Type | R-Value | Area X | WPM X | WCM = | Points |
|---|---|---|---|---|---|
| Under Attic | 30.0 | 2453.0 | 2.05 X | 1.00 | 5028.6 |
| Under Attic | 30.0 | 286.0 | 2.05 X | 1.00 | 586.3 |
| As-Built Total: | | 2739.0 | | | 5614.9 |

| Type | R-Value | Area X | W/PM | = Points |
|---|---|---|---|---|
| Slab-On-Grade Edge Insulation | 0.0 | 253.0(p | 13.80 | 4766.4 |
| As-Built Total: | | 253.0 | | 4766.4 |

| | Area X | W/PM | = Points |
|---|---|---|---|
| | 2453.0 | -0.59 | -1447.3 |

EnergyGauge® 4.0

FORM 600A-2004

# WINTER CALCULATIONS

## Residential Whole Building Performance Method A - Details

ADDRESS: , , , PERMIT #:

| BASE | | | AS-BUILT | | | | | | |
|---|---|---|---|---|---|---|---|---|---|
| Winter Base Points: | | 20084.5 | Winter As-Built Points: | | | | | | 24304.7 |
| Total Winter Points | X System Multiplier | = Heating Points | Total Component (System - Points) | X Cap Ratio | X Duct Multiplier (DM x DSM x AHU) | X System Multiplier | X Credit Multiplier | = Heating Points | |
| | | | (sys 1: Electric Heat Pump 60000 btuh ,EFF(8,5) Ducts:Uno(S),Uno (R),Gar(AH),R6.0 | | | | | | |
| | | | 24304.7 | 1.000 | (1.069 x 1.169 x 1.00) | 0.401 | 1.000 | 12184.8 | |
| 20084.5 | 0.6274 | 12601.0 | 24304.7 | 1.00 | 1.250 | 0.401 | 1.000 | 12184.8 | |

FORM 600A-2004 EnergyGauge® 4.0

# WATER HEATING & CODE COMPLIANCE STATUS

## Residential Whole Building Performance Method A - Details

ADDRESS: , , , PERMIT #:

| BASE | | | | AS-BUILT | | | | | | | |
|---|---|---|---|---|---|---|---|---|---|---|---|
| WATER HEATING | | | | | | | | | | | |
| Number of Bedrooms | X | Multiplier | = Total | Tank Volume | EF | Number of Bedrooms | X | Tank Ratio | X Multiplier | X Credit Multiplier | = Total |
| 4 | | 2635.00 | 10540.0 | 66.0 | 0.90 | 4 | | 1.00 | 2693.56 | 1.00 | 10774.2 |
| | | | | As-Built Total: | | | | | | | 10774.2 |

| CODE COMPLIANCE STATUS | | | | | | | |
|---|---|---|---|---|---|---|---|
| BASE | | | | AS-BUILT | | | |
| Cooling Points + | Heating Points + | Hot Water Points = | Total Points | Cooling Points + | Heating Points + | Hot Water Points = | Total Points |
| 13927 | 12601 | 10540 | 37068 | 9526 | 12185 | 10774 | 32485 |

PASS

FORM 600A-2004 EnergyGauge® 4.0

# Code Compliance Checklist

## Residential Whole Building Performance Method A - Details

ADDRESS: , , , PERMIT #:

### 6A-21 INFILTRATION REDUCTION COMPLIANCE CHECKLIST

| COMPONENTS | SECTION | REQUIREMENTS FOR EACH PRACTICE | CHECK |
|---|---|---|---|
| Exterior Windows & Doors | 606.1.ABC.1.1 | Maximum:.3 cfm/sq.ft. window area; .5 cfm/sq.ft. door area. | |
| Exterior & Adjacent Walls | 606.1.ABC.1.2.1 | Caulk, gasket, weatherstrip or seal between: windows/doors & frames, surrounding wall; foundation & wall sole or sill plate; joints between exterior wall panels at corners; utility penetrations; between wall panels & top/bottom plates; between walls and floor. EXCEPTION: Frame walls where a continuous infiltration barrier is installed that extends from, and is sealed to, the foundation to the top plate. | |
| Floors | 606.1.ABC.1.2.2 | Penetrations/openings >1/8" sealed unless backed by truss or joint members. EXCEPTION: Frame floors where a continuous infiltration barrier is installed that is sealed to the perimeter, penetrations and seams. | |
| Ceilings | 606.1.ABC.1.2.3 | Between walls & ceilings; penetrations of ceiling plane of top floor; around shafts, chases, soffits, chimneys, cabinets sealed to continuous air barrier; gaps in gyp board & top plate; attic access. EXCEPTION: Frame ceilings where a continuous infiltration barrier is installed that is sealed at the perimeter, at penetrations and seams. | |
| Recessed Lighting Fixtures | 606.1.ABC.1.2.4 | Type IC rated with no penetrations, sealed; or Type IC or non-IC rated, installed inside a sealed box with 1/2" clearance & 3" from insulation; or Type IC rated with < 2.0 cfm from conditioned space, tested. | |
| Multi-story Houses | 606.1.ABC.1.2.5 | Air barrier on perimeter of floor cavity between floors. | |
| Additional Infiltration reqts | 606.1.ABC.1.3 | Exhaust fans vented to outdoors, dampers; combustion space heaters comply with NFPA, have combustion air. | |

### 6A-22 OTHER PRESCRIPTIVE MEASURES (must be met or exceeded by all residences.)

| COMPONENTS | SECTION | REQUIREMENTS | CHECK |
|---|---|---|---|
| Water Heaters | 612.1 | Comply with efficiency requirements in Table 612.1.ABC.3.2. Switch or clearly marked circuit breaker (electric) or cutoff (gas) must be provided. External or built-in heat trap required. | |
| Swimming Pools & Spas | 612.1 | Spas & heated pools must have covers (except solar heated). Non-commercial pools must have a pump timer. Gas spa & pool heaters must have a minimum thermal efficiency of 78%. | |
| Shower heads | 612.1 | Water flow must be restricted to no more than 2.5 gallons per minute at 80 PSIG. | |
| Air Distribution Systems | 610.1 | All ducts, fittings, mechanical equipment and plenum chambers shall be mechanically attached, sealed, insulated, and installed in accordance with the criteria of Section 610. Ducts in unconditioned attics: R-6 min. insulation. | |
| HVAC Controls | 607.1 | Separate readily accessible manual or automatic thermostat for each system. | |
| Insulation | 604.1, 602.1 | Ceilings-Min. R-19. Common walls-Frame R-11 or CBS R-3 both sides. Common ceiling & floors R-11. | |

# ENERGY PERFORMANCE LEVEL (EPL) DISPLAY CARD

**ESTIMATED ENERGY PERFORMANCE SCORE* = 85.2**

**The higher the score, the more efficient the home.**

| | | |
|---|---|---|
| 1. New construction or existing | New | |
| 2. Single family or multi-family | Single family | |
| 3. Number of units, if multi-family | 1 | |
| 4. Number of Bedrooms | 4 | |
| 5. Is this a worst case? | Yes | |
| 6. Conditioned floor area (ft²) | 2453 ft² | |
| 7. Glass type[1] and area: (Label reqd. by 13-104.4.5 if not default) | | |
| a. U-factor: (or Single or Double DEFAULT) | 7a. Description Area (Dble Default) 277.0 ft² | |
| b. SHGC: (or Clear or Tint DEFAULT) | 7b. (Clear) 277.0 ft² | |
| 8. Floor types | | |
| a. Slab-On-Grade Edge Insulation | R=0.0, 253.0(p) ft | |
| b. N/A | | |
| c. N/A | | |
| 9. Wall types | | |
| a. Frame, Wood, Adjacent | R=11.0, 192.0 ft² | |
| b. Concrete, Ext Insul, Exterior | R=4.1, 1415.0 ft² | |
| c. Concrete, Int Insul, Adjacent | R=4.1, 140.0 ft² | |
| d. N/A | | |
| e. N/A | | |
| 10. Ceiling types | | |
| a. Under Attic | R=30.0, 2453.0 ft² | |
| b. Under Attic | R=30.0, 286.0 ft² | |
| c. N/A | | |
| 11. Ducts | | |
| a. Sup: Unc, Ret: Unc, AH: Garage | Sup, R=6.0, 148.0 ft | |
| b. N/A | | |

| | | |
|---|---|---|
| 12. Cooling systems | | |
| a. Central Unit | Cap: 60.0 kBtu/hr | |
| | SEER: 13.00 | |
| b. N/A | | |
| | | |
| c. N/A | | |
| | | |
| 13. Heating systems | | |
| a. Electric Heat Pump | Cap: 60.0 kBtu/hr | |
| | HSPF: 8.50 | |
| b. N/A | | |
| | | |
| c. N/A | | |
| | | |
| 14. Hot water systems | | |
| a. Electric Resistance | Cap: 66.0 gallons | |
| | EF: 0.90 | |
| b. N/A | | |
| | | |
| c. Conservation credits (HR-Heat recovery, Solar DHP-Dedicated heat pump) | | |
| 15. HVAC credits (CF-Ceiling fan, CV-Cross ventilation, HF-Whole house fan, PT-Programmable Thermostat, MZ-C-Multizone cooling, MZ-H-Multizone heating) | | |

I certify that this home has complied with the Florida Energy Efficiency Code For Building Construction through the above energy saving features which will be installed (or exceeded) in this home before final inspection. Otherwise, a new EPL Display Card will be completed based on installed Code compliant features.

Builder Signature: Sue McCall Date: 7/24/06

Address of New Home: SW Greenwood Terr City/FL Zip: Ft. White, FL 32038

*NOTE: The home's estimated energy performance score is only available through the FLA RES computer program. This is not a Building Energy Rating. If your score is 80 or greater (or 86 for a US EPA DOE EnergyStar® designation), your home may qualify for energy efficiency mortgage (EEM) incentives if you obtain a Florida Energy Gauge Rating. Contact the Energy Gauge Hotline at 321-638-1492 or see the Energy Gauge web site at www.fsec.ucf.edu for information and a list of certified Raters. For information about Florida's Energy Efficiency Code For Building Construction, contact the Department of Community Affairs at 850-487-1824.

1 Predominant glass type. For actual glass type and areas, see Summer & Winter Gtins output on pages 2&4.

GEO-TECH, INC.
ENGINEERING CONSULTANTS IN GEOTECHNICAL • ENVIRONMENTAL • CONSTRUCTION MATERIALS TESTING

November 8, 2006
Project No. 06141.496G

Pat Shackelford
Homes By Whittaker
P. O. Box 771149
Ocala, Florida 34477

Reference: Proposed Bohlman Residence
S. W. Greenwood Terrace
Fort White, Florida
HBW Job No. 2105

Dear Mr. Shackelford,

As requested, Geo-Technologies, Inc. (GTI) has performed the geotechnical engineering investigation and evaluation of the site for the Bohlman residence to be constructed near the intersection of S. W. Greenwood Terrace and C. R. 18 in Fort White, Florida. The purposes of our investigation were to determine the general subsurface conditions in the proposed building area and to provide recommendations for foundation design, site preparation and other geotechnical concerns as appropriate.

We believe the residence will be single-story and have a plan area on the order of 2,000 to 2,500 square feet. Support for the residence is to be provided by a monolithic foundation or by stem walls and conventional, shallow spread footings. Foundation loads were not provided; however, we believe column and wall loads will not exceed 25 kips and 2.0 kips per foot, respectively.

## Site Investigation

On October 30, 2006, GTI performed four Standard Penetration Test borings advanced to depths of 7 to 7.5 feet below the existing surface grade. Borings were performed at the approximate locations indicated on the attached drawing. These locations were selected by GTI, and the building limits were staked on site. Representative samples of the site soils were collected and returned to our laboratory for visual examination and classification by a geotechnical engineer.

The Standard Penetration Test (ASTM D-1586) is performed by driving a standard split-barrel sampler into the soil by blows of a 140-pound hammer falling 30 inches. The number of blows required to drive the sampler 1 foot, after seating 6 inches, is designated the penetration resistance, or N-value; this value is an index to soil density or consistency.

4000 SW 35TH TERRACE, SUITE C • GAINESVILLE, FLORIDA 32608 • PHONE: (352) 372-1274 • FAX: (352) 372-2721

## Findings

The soil borings generally encountered three soil strata. The first layer consists of 3.5 to 6 feet of generally very loose, brownish gray, tan or grayish tan sand (SP). The N-values of this layer range from 1 to 10 blows per foot and but are generally 1 to 3 blows per foot.

The second layer consists of 0.5 to 3 feet of loose to medium dense, orange, brown, gray, red and/or tan, clayey sand (SC). The N-values of this layer range generally from 10 to 21 blows per foot.

The third layer consists of an undetermined thickness of stiff to very stiff, gray, orange and red clay or sandy clay (CH, CL). The N-values of this layer range from 9 to 16 blows per foot.

Ground water was not encountered at any boring location at the time of our investigation, and we believe the wet season water table will occur at a depth of more than 6 feet below the existing surface grade. Ground water therefore should not adversely affect site preparation procedures.

For a more detailed description of the subsurface conditions encountered, please refer to the attached borings logs. Note specifically the transition between soil layers is typically gradual and not abrupt as indicated by the logs; therefore, the thickness of soil layers should be considered approximate.

## Discussion and Recommendations

Based upon our findings, it is our opinion soil conditions at this site are not particularly suitable for construction of the residence. First, the surface soils are very loose to a depth of about 4 feet, and second, clay soils believed to be slightly to moderately active are present at boring locations B-2 and B-3. Active soils shrink or swell with changes in their moisture content, and these volume changes can cause detrimental foundation or slab movement. However, the clay soils appear to be located at depths of 4 to 5 feet below the existing surface grade, and this depth should provide about 2.5 to 3 feet of separation between the foundations and the clays. This separation may be sufficient to reduce the likelihood of significant foundation or slab movement; however, we recommend additional separation be provided.

The local standard-of-care for placing conventional footings or monolithic foundations over active clay soils is to provide 3 to 4 or more feet of separation between the active soils and the bottoms of the foundations. Providing this separation is typically accomplished by excavation and replacement of the active soil, by fill placement to raise the site, or by some combination of these methods. For this site raising the surface grade, we believe, is the most practical means of providing separation, and we recommend the building area be raised about 1.5 to 2 feet. This should provide an

estimated 4 to 4.5 feet of separation between the bottoms of foundations and the clay soils.

Prior to raising the site grade, the existing surface soils should be thoroughly compacted. To perform this compaction, we recommend the existing surface soils be over-excavated to a depth of about 1.5 feet below the existing surface grade. The lateral limits of excavation should extend a minimum of 3 feet beyond the outer edges of the foundations.

The over-excavated building area should then be thoroughly proof-rolled using heavy, rubber-tired equipment and then proof-compacted using a heavy, steel-drum, vibratory roller. This exposed subgrade should be compacted to a minimum of 95% of the Modified Proctor maximum dry density to a depth of 2 feet. This compaction will prepare the subgrade for placement of fill or replacement soils.

The existing site soils may be reused as fill provided they are reasonably free of organics. However, fill or replacement soils generally should consist of clean, fine sand containing less than 10% passing the No. 200 sieve. These soils should be placed in maximum 12-inch loose lifts, and each lift should be proof-compacted to a minimum of 95% of the Modified Proctor maximum dry density.

Field density testing should be performed in the compacted subgrade, in each lift of fill and in foundations excavations to verify the recommended compaction has been achieved.

We recommend foundations be sized to exert a maximum soil bearing pressure of 2,500 pounds per square foot. Additionally, the bottoms of the foundations should be embedded a minimum of 16 inches below the finished surface grade. Foundations should have minimum widths of 18 and 24 inches for strip and isolated footings, respectively.

We appreciate the opportunity to be of service on this project and look forward to a continued association. Please do not hesitate to contact us if you have questions concerning this report or if we may be of further assistance.

Respectfully submitted,
Geo-Technologies, Inc.

John C. Dorman, Jr., Ph.D., P.E. 11/8/06
Geotechnical Engineer 52612

## B-1

Ground Water: N/A

| Depth (ft) | N-Value | Soil Description |
|---|---|---|
| 0 | | Dark Brownish Gray SAND (SP) |
| | 3 | Very Loose, Grayish Tan SAND (SP) |
| | 2 | Very Loose to Loose, Light Tan SAND (SP) |
| 5 | 10 | Orange to Light Brown, SLIGHTLY CLAYEY SAND (SC) |

## B-2

Ground Water: N/A

| Depth (ft) | N-Value | Soil Description |
|---|---|---|
| 0 | | Dark Brownish Gray SAND (SP) |
| | 1 | Very Loose, Tan to Light Tan SAND (SP) |
| | 3 | Very Loose, Brown and Tan, SLIGHTLY CLAYEY SAND (SC) |
| 5 | 9 | Orangish Brown, SANDY CLAY (CL) |
| | | Orange and Gray CLAY (CH) |

## B-3

Ground Water: N/A

| Depth (ft) | N-Value | Soil Description |
|---|---|---|
| 0 | | Dark Brownish Gray SAND (SP) |
| | 1 | Very Loose, Light Brown to Tan SAND (SP) |
| | 2 | Loose, Orangish Tan, SLIGHTLY CLAYEY SAND (SC) |
| 5 | 10 | Stiff, Gray and Orange, SANDY CLAY (CL) |
| | 16 | Gray, Orange and Red, SLIGHTLY SANDY CLAY (CH) |

## B-4

Ground Water: N/A

| Depth (ft) | N-Value | Soil Description |
|---|---|---|
| 0 | 3 | Very Loose, Light Brown and Tan SAND (SP) |
| | 1 | Very Loose, Light Tan SAND (SP) |
| | | Stiff, Brown, SLIGHTLY SANDY CLAY (CL) |
| 5 | 13 | Medium Dense, Gray and Red, CLAYEY SAND (SC) |
| | 21 | Medium Dense, Brown, Gray and Red, CLAYEY SAND (SC) |

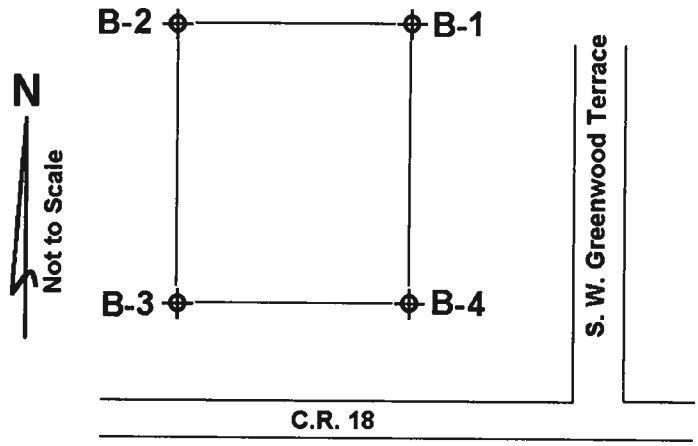


**Boring Logs and Location Plan: Proposed Bohlman Residence**
**S. W. Greenwood Terrace**
**Fort White, Florida**
**GTI No.: 06141.496G**

Owens Corning Sales
2519 McMullen Booth Road
Suite 510 - #194
Clearwater, FL 33761
727.781.4517 Fax: 419.325.9880
Cell: 727.638.1671
Internet: holly.baldwin@owenscorning.com

OWENS CORNING
INNOVATIONS FOR LIVING™

May 7, 2006

Dear Florida Customers:

## It is final! Duct Board Use in Garages in Florida Officially Approved!

We are pleased to announce that on May 2, 2006 the Florida Building Commission approved, by a vote of 23 to 0, the "***Glitch Amendment***" to the recent Florida Building Codes that went into effect October 1, 2005 that spells out that duct board can be use in garages. The amended Section R309.1.1 goes into affect December 1, 2006.

If you remember, the issue was the Florida code change requiring sheet metal penetrations through walls from the air handler in garages. In 2003, Florida, which in the past maintained its own building codes, decided to adopt the International Code Council (ICC). In two parts of the ICC, there was a requirement that "if an air handler is located in a garage, use only 26 gage sheet metal or other approved materials". For nearly 40 years Florida codes had allowed the use of duct board in garages. During the initial review, this requirement was changed in the incoming Mechanical Code, but not in the Residential Code. These two codes are not enforced by the same inspectors.

Since July of 2005, we have had our two first class Owens Corning technical engineers, Dave Lovich and Dick Gebhart, along with me, just passionately pursuing and addressing the incoming Florida Residential Code requirement. We worked tirelessly with Florida builders, HVAC distributors and contractors to correct the oversight with a "*Glitch Amendment*" -- all of us even attending a code hearing on Super Bowl Sunday 2006!

And we were finally successful!

Section R309.1.1 will now read as follows, with the amended wording in underlined Red:
*R309.1.1 Duct penetration. Ducts in the garage and ducts penetrating the walls or ceilings separating the dwelling from the garage shall be constructed of a minimum No. 26 gage (0.48 mm) sheet steel, 1 inch minimum rigid nonmetallic Class 0 or Class1 duct or other approved material and shall have no openings into the garage.* The term "nonmetallic duct" is defined in *Chapter 16 Duct System* of the Florida Residential Code as "must comply with UL 181 as being Class 0 or Class 1". UL 181 defines the term "rigid" as "duct board".

Thanks for all your support of Owens Corning in this long and important journey.

Respectfully,

Holly Baldwin

Holly Baldwin
Area Sales Manager

# THE SUCCESS OF OUR COMPANY STANDS ON THE QUALITY OF EVERY STAIRWAY WE MAKE

## ★ Every HUSKY Features:

ATTN: TOMMY

- Full Width Heavy Duty Piano Hinge
- 3/16" Steel Ladder Rod Under Each Tread
- Selected Kiln Dried Southern Pine Lumber
- Re-Inforced Door Panel
- Moulded Stringers, Handrail, and Treads
- Finished Millwork Appearance
- Safety Locknut to Secure Spring Arm to Ladder Section
- Adjustable Spring Tension
- Nuts, Bolts, and Hardware Plated or Painted to Prevent Rust
- Completely Assembled, Ready to Install with Instructions Supplied

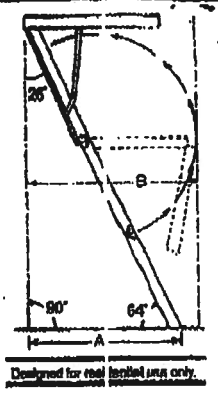


## ★ Easy First Step Down From Attic for Personal Safety

## ★ 9½" Tread Rise on All Husky Stairs

1. Our piano hinge reaches across the entire width of the stairway. This means far more strength and rigidity than other type stairway hinges now in use. Cuts out air leakage at head of stair, and does not interfere with trim carpenter.
2. Every tread has a 3/16" ladder rod with large washers to keep HUSKY stairs rigid and prevent bending or separation under heavier loads.
3. Heavier gauge hardware arms and re-inforced bottom section hinge at stress point.
4. All wood parts of kiln dried southern yellow pine, selected for density and load bearing capability.
5. Moulded stringers, treads and handrails. Eliminates splinters, eases edges, and enhances finished millwork appearance.

*JOB TESTED IN THOUSANDS OF INSTALLATIONS THROUGHOUT THE NATION AND SEVERAL FOREIGN COUNTRIES.*

**OPTIONS AND ACCESSORIES**

HY-VIZ Rubberized coated treads — additional safety at low cost.
INSULATED DOOR PANEL (R-6 insulating value saves energy.)
FIRE RESISTANT DOOR PANEL (Class C — Flame spread not over 25 in a 30 minute test. UL Rating.)

### THREE GREAT MODELS TO CHOOSE FROM!

MODEL 444: 1x4 Treads, 1x4 Stringer, 1x4 Frame Rated 250 LBS
MODEL 544: 1x5 Treads, 1x4 Stringer, 1x4 Frame Rated 250 LBS
MODEL 655: 1x6 Treads, 1x5 Stringer, 1x5 Frame Rated 300 LBS

| Rough Opening | Ceiling Height | Tread Treads* | A Landing Space** | B Projection | Available in Models 444 WT | 544 WT | 655 WT |
|---|---|---|---|---|---|---|---|
| 22" x 48" | 8'5" | 10 | 58" | 60" | X 54 lbs. | X 58 lbs. | X 64 lbs. |
| 22" x 54" | 8'9" | 11 | 59" | 66" | X 58 lbs. | X 60 lbs. | X 67 lbs. |
| 22" x 54" | 10' | 13 | 65" | 79" | X 63 lbs. | X 65 lbs. | X 70 lbs. |
| 25 ½" x 48" | 8'5" | 10 | 58" | 60" | X 55 lbs. | X 60 lbs. | X 68 lbs. |
| 25 ½" x 54" | 8'9" | 11 | 59" | 66" | X 62 lbs. | X 65 lbs. | X 75 lbs. |
| 25 ½" x 54" | 10' | 13 | 65" | 79" | X 66 lbs. | X 68 lbs. | X 84 lbs. |
| 30" x 54" | 8'9" | 11 | 59" | 66" | | | X 84 lbs. |
| 30" x 54" | 10' | 13 | 66" | 79" | | | X 92 lbs. |
| 30" x 60" | 8'9" | 11 | 59" | 66" | | | X 84 lbs. |
| 30" x 60" | 10' | 13 | 66" | 79" | | | X 96 lbs. |

*Most Competition has 1 or 2 treads less
**It is recommended adding 18" in landing space dimensions for safe ascent or descent of the stairway.

**American Stairways, Inc.**
3807 Lamar Ave. • Memphis, TN 38118
901-795-8200 • FAX 901-795-1253

Attn: Tommy

Door panel is fire-treated Plywood with below stamp.

UND. LAB. INC.®
CLASSIFIED 18P4
FR-S PLYWOOD
AWPA C27-99 INTERIOR TYPE A (HT)

ARCH WOOD PROTECTION

PROCESS STANDARD D-1
MONITORED BY:
TIMBER PRODUCTS INSPECTION

DRICON®
FIRE RETARDANT TREATED WOOD

PLANT 821
DEAN LUMBER CO.
GILMER, TX
NER-303 KDAT

J M M J S N
F A J A O D 01

From: The Columbia County Building & Zoning Department
Plan Review
135 NE Hernando Av.
P.O. Box 1529
Lake City Florida 32056-1529

Reference to a building permit application Number: 0608-63

Contractor Homes by Whittaker Owner George & Susan Bohlmann Property ID# 34-6s-16-04056-137

On the date of August 22, 2006 application 0608-63 and plans for construction of a single family dwelling were reviewed and the following information or alteration to the plans will be required to continue processing this application. If you should have any question please contact the above address, or contact phone number (386) 758-1163 or fax any information to (386) 754-7088.

**Please include application number 0608-63 and when making reference to this application.**

***This is a plan review for compliance with the Florida Residential Code 2004 only and doesn't make any consideration toward the land use and zoning requirements.***

**To help ensure compliance with the Florida Residential Code 2004 the comments below need to be addressed on the plans.**

1. Please provide a copy of a signed released site plan from the Columbia County Environmental Health Department which confirms approval of the waste water disposal system.
2. The structural design by Mr. Paul Riddle requires that the soil conditions have a load bearing capacity of 2,000 PSF. Therefore please follow the prescribed testing methods to reveal the soil load bearing capacities. Please have a registered professional conduct subsurface explorations at the project site upon which foundations are to be constructed, a sufficient number (not less than four, one boring on each corner of the building foundation) borings shall be made to a depth of not less than 10 feet (3048 mm) below the level of the foundations to provide assurance of the soundness of the foundation bed and its load-bearing capacity.
3. The HVAC unit in the garage area shall comply with section R309.1.1 Duct penetration: Ducts in the garage and ducts penetrating the walls or ceilings separating the dwelling from the garage shall be constructed of a minimum No. 26 gage (0.48 mm) sheet steel or other approved material and shall have no openings into the garage.
4. The attic access opening (pull down ladder type attic egress door) in the garage ceiling shall have the same protection requirements of FRC-2004 C: R309.2 Separation required. The garage shall be separated from the residence and its attic area by not less than ½-inch (12.7 mm) gypsum board applied to the garage side. Garages beneath habitable rooms shall be separated from all habitable rooms above by not less than 5/8-inch (15.9 mm) Type X gypsum board or

equivalent. Where the separation is a floor-ceiling assembly, the structure supporting the separation shall also be protected by not less than ½-inch (12.7 mm) gypsum board or equivalent. Other openings between the garage and residence shall be equipped with solid wood doors not less than 13/8 inches (35 mm) in thickness, solid or honeycomb core steel doors not less than 13/8 inches (35 mm) thick, or 20-minute fire-rated doors.

**5.** The truss plan which was submitted with the application does not have the truss designer raised embossed engineered seal affixed as required by the FRC minimum plan review criteria for buildings. Please submit two sets of sealed truss plans for this building.

Joe Haltiwanger

Columbia County
Plan Examiner

**Homes by Whittaker, Inc.**
P. O. Box 771149
Ocala, FL 34477-1149

ROOFING, WINDOW & DOOR REQUIREMENTS

## ROOF SYSTEM DESCRIPTION

DECK TYPE: OSB, Gable ends 4" o.c., field 6" o.c., hipends 6", field 12" o.c. 8d common nail
(OSB etc, Nail pattern & fastner size)

UNDERLAYMENT: 15# felt
(Felt weight)

FLASHING: 26ga. mil finish 4x5 galvanized

CAP SHEET: N/A
(Flat roof only)

ROOF COVERING: Owens Corning 6 nails per shingle
(Mfg. & Nailing)

DRIP EDGE MATERIAL: 5" aluminum dripedge nailed every 12 inches w/1¼" roofing nails

EAVE VENTILATION: Vented aluminum soffit

RIDGE VENTILATION
ridge vent

12" / 6"
ROOF SLOPE

MEANHEIGHT 86"

Valley material - 90 lb. underlayment
nailed every 12 inches
w/1-¼" roofing nails

## WINDLOAD INFO

1. Basic wind speed ___100 mph X 110 mph
2. Wind importance factor 1.00
3. Wind exposure B
4. Internal pressure coefficient enclosed building
5. Components & cladding (design pressure)_____

STRUCTURAL DESIGN ONLY
ROOF LIVE LOAD = 20 PSF
ROOF DEAD LOAD = 17 PSF
ASSUMED SOIL BEARING CAPACITY = 2000 PSF

DESIGN WIND PRESSURES
COMPONENTS & CLADDING
0 - 10 SF = +21.8, -29.1 PSF
10 - 20 SF = +20.8, -27.2 PSF
20 - 50 SF = +19.5, -24.5 PSF
50 - 100 SF - +18.5, -22.6 PSF
FBC 2004 - 110 MPH

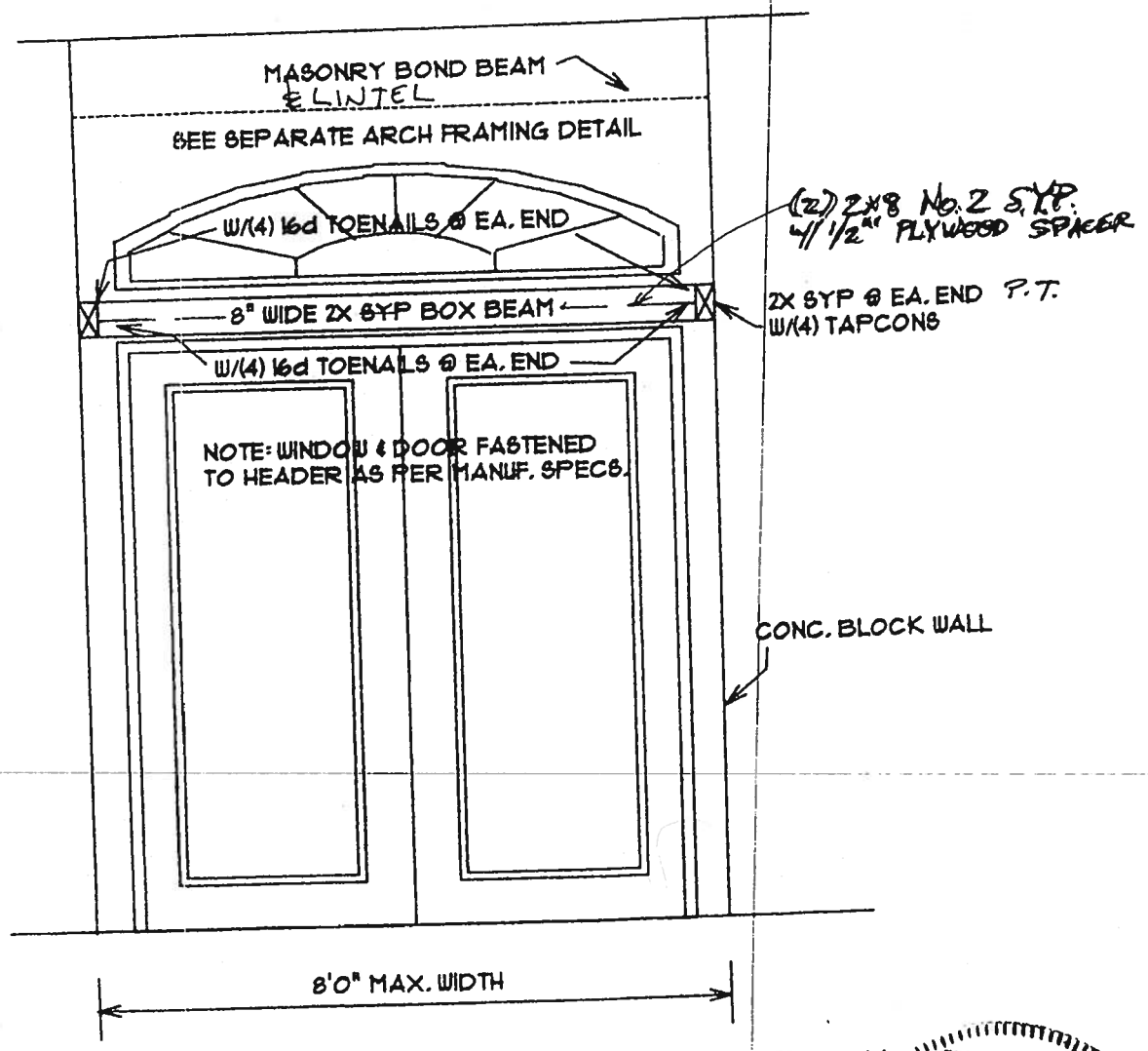


# WOOD HEADER DETAIL

RIDDLE ENGINEER
2005 03 12 80
SEALED

ENGINEER's NOTES:
DESIGN WIND SPEED = 110 MPH (3 SEC GUST)
IMPORTANCE FACTOR = 1.0
INTERNAL PRESSURE COEFFICIENT = +/-0.18
WIND EXPOSURE "B"

RIDDLE CONSULTING ENGINEERS, INC.
1720 S.E. County Highway 484
Belleview, FL 34420
(352) 245-7041 Fax (352) 245-5458
Certificate of Authorization: 00004759

# RIDDLE CONSULTING ENGINEERS, INC.

PAUL D. RIDDLE, P.E. Certificate of Authorization: 00004759 Telephone: (352) 245-7041
Fax: (352) 245-5458

RIDDLE CONSULTING ENGINEERS, INC.
1720 S.E. County Highway 484
Belleview, Florida 34420


MARION COUNTY BUILDING DEPARTMENT
2631 S.E. 3rd Street
Ocala, Florida 34471

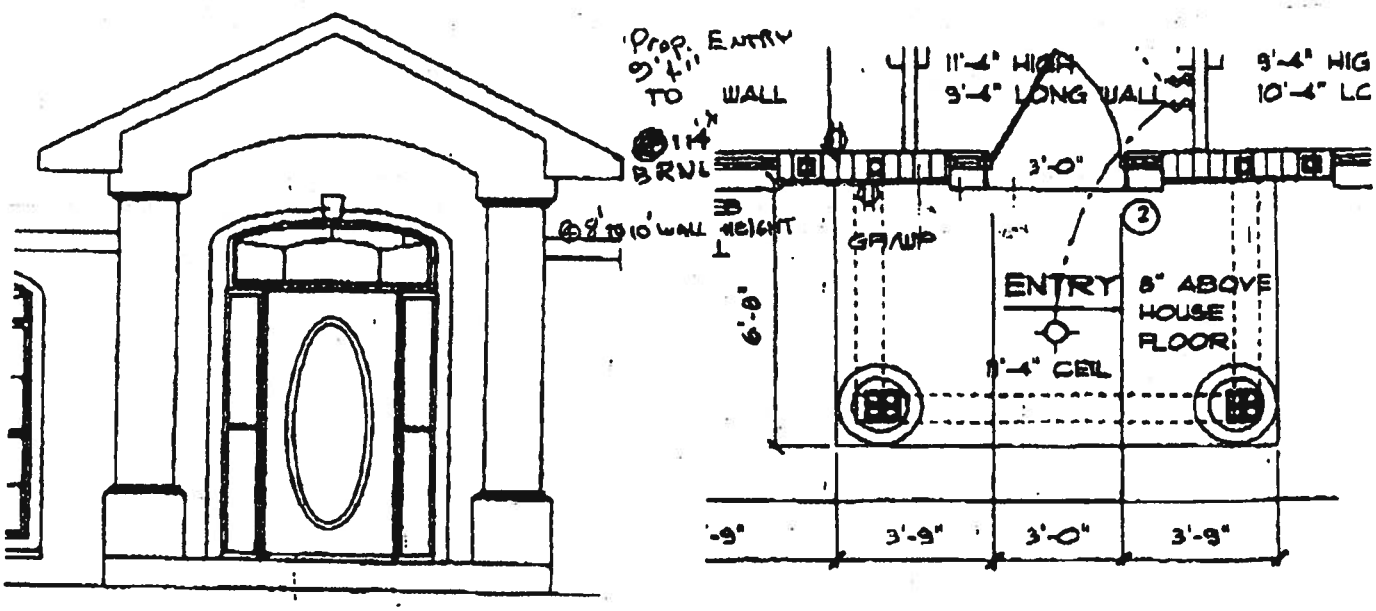


ELEVATION PLAN

## ENTRY DETAIL

NTS

| DESIGN WIND PRESSURES (COMPONENTS AND CLADDING) | |
|---|---|
| 110 MPH | 0-10 SQ FT = +21.8,-29.1 |
| | 10-20 SQ FT = +20.8,-27.2 |
| | 20-50 SQ FT = +19.5,-24.5 |
| | 50-100 SQ FT = +18.5,-22.6 |

ENGINEER's NOTES:

1. BASIC WIND SPEED (3 SECOND GUST) = 110 MPH
2. WIND IMPORTANCE FACTOR = 1.0
3. WIND EXPOSURE = "B"
4. ROOF LIVE LOAD = 20 PSF, DEAD LOAD = 17 PSF
5. ASSUMED SOIL BEARING CAPACITY = 2,000 PSF
6. FLORIDA BUILDING CODE 2004

DETAIL TO BE PLACED ON FILE FOR USE BY HOMES BY WHITTAKER.

PAUL D. RIDDLE, P.E.
No. 36989, FLORIDA

ENGINEERING EXPIRES 12-31-07

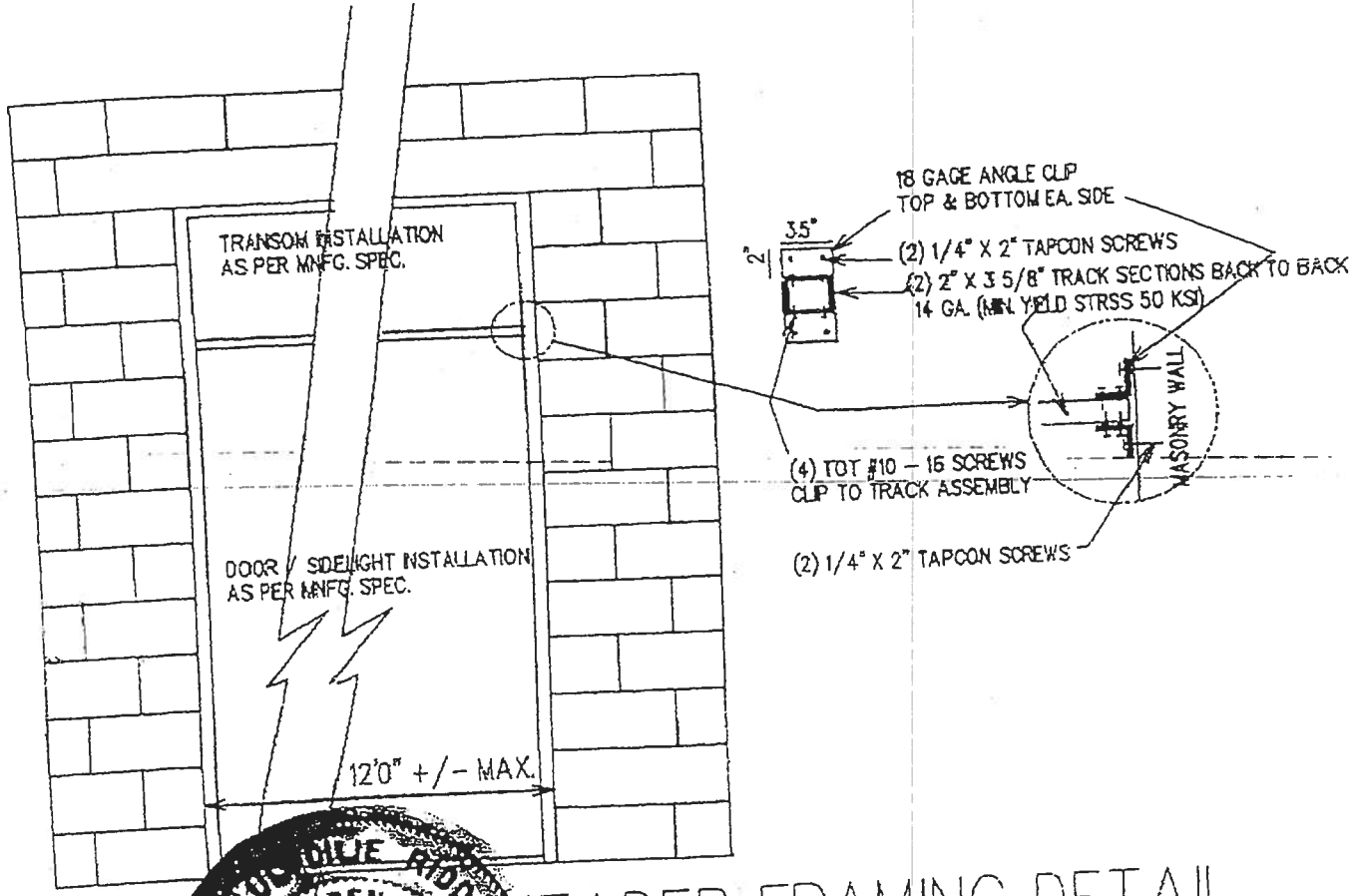


# TRANSOM HEADER FRAMING DETAIL

110 MPH WIND SPEED

PAUL DILLE RIDDLE
LICENSE
NO. 36989
STATE OF FLORIDA
PROFESSIONAL ENGINEER

DETAILS TO BE PLACED ON FILE BY HOMES BY WHITTAKER
EXPIRES 12-31-05

RIDDLE CONSULTING ENGINEERS, INC
1720 S.E. County Highway 484
Belleview, FL 34420
(352) 245-7041 Fax (352) 245-5458
Certificate of Authorization 00004758

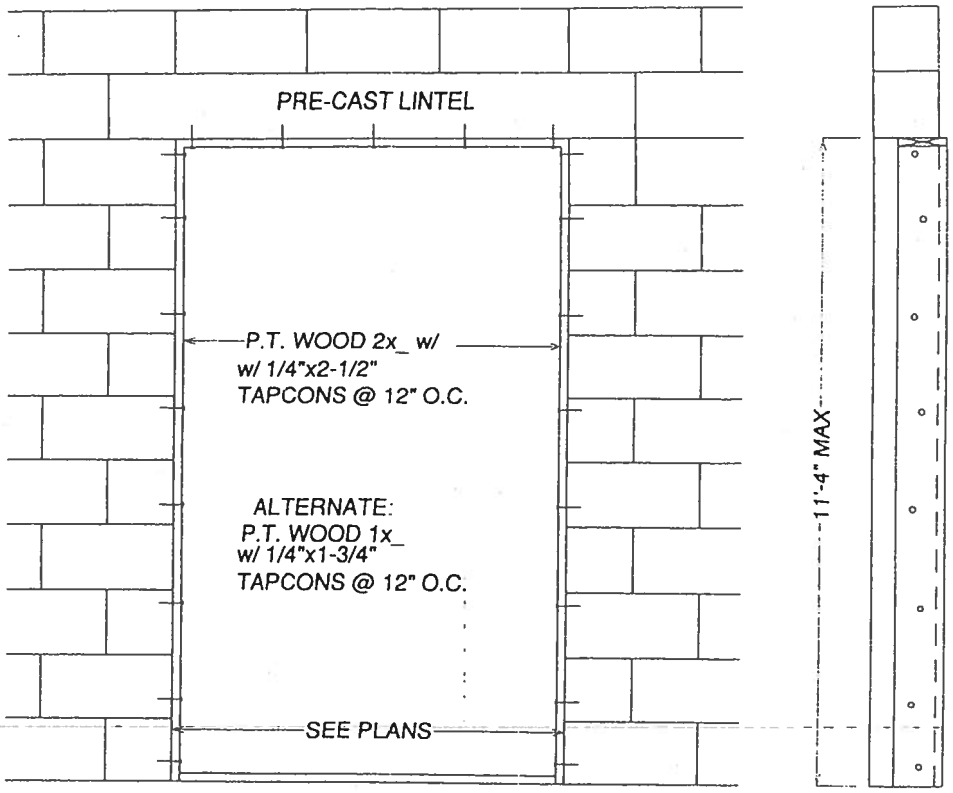


# DOOR BUCK DETAIL

@ EXTERIOR WALL

SCALE 1/2" = 1'-0"

PAUL DILIE RIDDLE
LICENSE
No. 66989
STATE OF FLORIDA
PROFESSIONAL ENGINEER

DESIGN WIND SPEED = 110 MPH 3 SEC GUST
FLORIDA BUILDING CODE 2004 RESIDENTIAL
DESIGN WIND PRESSURE = +21.8, - 29.1 PSF

DETAIL IS TO BE PLACED ON FILE
FOR HOMES BY WHITTAKER
EXPIRES 12-31-06

DOOR BUCK DETAIL

FOR

HOMES BY WHITTAKER

RIDDLE CONSULTING ENGINEERS
CIVIL MECHANICAL STRUCTURAL
CERTIFICATE OF AUTHORIZATION: 00004759
1720 S.E. COUNTY HWY 484
Belleview, Florida 34420
(352) 245-7041

| scale | drawn | date | Proj No. | Page |
|---|---|---|---|---|
| NTS | PDR | 12/16/04 | NA | 1 of 1 |

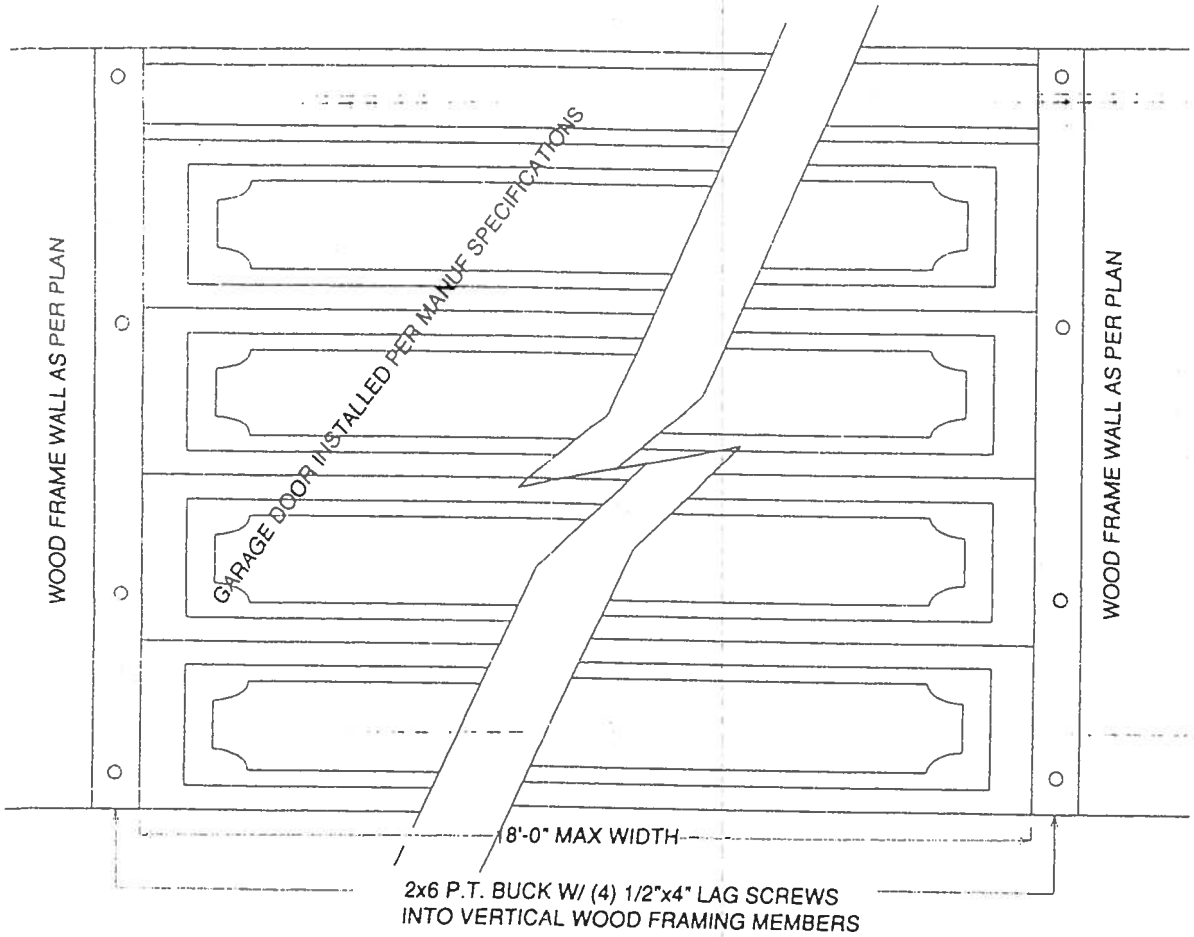


# GARAGE DOOR ATTACHMENT DETAIL

SCALE 1/2" = 1'-0"

@ EXTERIOR WALL

DESIGN WIND SPEED = 110 MPH 3 SEC GUST
FLORIDA BUILDING CODE 2004 RESIDENTIAL
DESIGN WIND PRESSURE = +21.8, - 29.1 PSF

DETAIL IS TO BE PLACED ON FILE
FOR HOMES BY WHITTAKER, INC.
EXPIRES 12/31/06

12-18-05
PE 36087

PAUL RIDDLE
LICENSED
CIVIL
STRUCTURAL

GARAGE DOOR
ATTACHMENT DETAIL
FOR
HOMES BY WHITTAKER, INC.

RIDDLE CONSULTING ENGINEERS
CERTIFICATE OF AUTHORIZATION 00004759
1720 S.E. COUNTY HWY 484
Belleview, Florida 34420
(352) 245-7041

| scale | drawn | date | Proj No. | Page |
|---|---|---|---|---|
| NTS | RDR | 3/18/05 | N/A | 1 OF 1 |

W3 E

| REV NO | ZONE | DATE | ECN NO | APPROD | DESCRIPTION |
|---|---|---|---|---|---|
| 1 | B2 | 11/00 | - | WWW | NOTE (1) WAS (2) FOR TRACK [illegible] |

REVISIONS

LISTED
SBCCI
PST&ESI
REPORT #9606C

DESIGN LOADS: +20.0 PSF & -21.0 PSF
TEST LOADS +30.0 PSF & -32.0 PSF

PART NO

IDEAL
DESCRIPTION MODEL 6RST W3 16-0 X 8-0 +20/-21 DESIGN LOAD
DRAWN BY DWW DATE 4/18/00
CHECKED BY WWW DATE 4/18/00
SCALE NTS
SHEET 1 OF 1
DWG NO 19211
REV NO

TOLERANCES

NOTICE

| REV NO | ZONE | DATE | ECN NO | APPVD | DESCRIPTION |
|---|---|---|---|---|---|
| | | | | | |

ORANGE COUNTY BUILDING DIVISION
MASTER FILE # IDEAL 102138
8-16-00

AUG - 1 2000

DESIGN LOADS: +24.0 PSF & -
TEST LOADS: +36.0 PSF & -37

PARTS NO.: -

TOLERANCES
.0 = ±.03
.00 = ±.015
.000 = ±.005
.0000 = ±.0025
Degrees = ±1/2

Third Angle Projection

IDEAL
102 Walnut St. Suite 1600
Cincinnati, OH 45202
Tel No. 1-513-381-4000
Fax No. 1-513-721-5313

| | | |
|---|---|---|
| DESCRIPTION: MODEL 6FST W/ 16-0 x 8-0; 24/-24.5 DE | | |
| DRAWN BY: BLDG | DATE: 4/18/00 | SCALE: NTS |
| CHECKED BY: MMM | DATE: 4/18/00 | SHEET 1 OF 1 |
| DWG. NO.: 102138 | | REV. NO. 0 |

4 3 2 1

W4

# THERMA-TRU®

"CONSTRUCTION SERIES" INSWING 6-8 SINGLE AND DOUBLE W/& W/OUT SIDELITES. INSULATED STEEL DOOR WITH WOOD FRAMES.

## GENERAL NOTES

1. THIS PRODUCT IS DESIGNED TO MEET THE SOUTH FLORIDA BUILDING CODE 1994 EDITION FOR MIAMI-DADE COUNTY.
2. WOOD BUCKS BY OTHERS, MUST BE ANCHORED PROPERLY TO TRANSFER LOADS TO THE STRUCTURE.
3. PRODUCT ANCHORS SHALL BE AS LISTED AND SPACED AS SHOWN ON DETAILS. ANCHOR EMBEDMENT TO BASE MATERIAL SHALL BE BEYOND WALL DRESSING OR STUCCO.
4. DESIGNED PRESSURE RATING SEE TABLE PAGE 1.
5. THIS PRODUCT WAS TESTED FOR 2.86 LBS. WATER PRESSURE AS PER ASTM-E331.
6. THIS PRODUCT DOES NOT MEET THE WATER REQUIREMENTS FOR MIAMI-DADE COUNTY.
7. MIAMI-DADE APPROVED IMPACT RESISTANT SHUTTERS ARE REQUIRED FOR SIDELITES ONLY.
8. SIDELITES ARE AN OPTION AND CAN BE ORDERED IN A SINGLE OR DOUBLE CONFIGURATION.

## RESIDENTIAL INSULATED STEEL DOOR
(Common to all frame conditions)

Door & Sidelite Panel: Construction:

Door Face Sheets: 25 GA.(0.018")minimum thickness. Galvanized steel A-525 commercial quality – AKDQ per ASTM 620 with yield strength Fy(min.)=27,830 psi

Core design: Polyurethane foam core, with1.9 lbs. density by BASF.

Door Panel Construction: Flush or embossed type. The vertical edges of the skin, rolled formed to provide a mechanical interlock with finger jointed pine stiles. Wood end rails are butt jointed and pressure filled with contact cement to the wood stiles at the corners.

Sidelight Face Sheets: 24 GA.(0.021")minimum thickness. Galvanized steel A-525 commercial quality – AKDQ per ASTM 620 with yield strength Fy(min.)=27,830 psi

Sidelite Panel Construction and Glazing: The vertical edges of the skin are rolled formed to provide a mechanical interlock with finger jointed pine stiles. Wood end rails are butt jointed to the wood stiles at the corners. The sidelite panels are sandwich glazed using a two piece lite frame with mitered & welded corners.

Frame Construction: The frame is constructed from finger jointed Ponderosa Pine measuring 4.575" wide x 1.75" thick. The header is joined to the side jambs with (3) 16ga. 1/2" crown x 2" long staples at each side. The threshold is joined to the side jambs with (2) 16ga. 1/2" crown x 2.5" long staples at each side. The mullions are secured together in a sidelite application using #8 x 2" long PFH Wood Screws (6) screws per each mullion. The unit uses an Inswing Saddle threshold measuring 5.75" x 1.548".

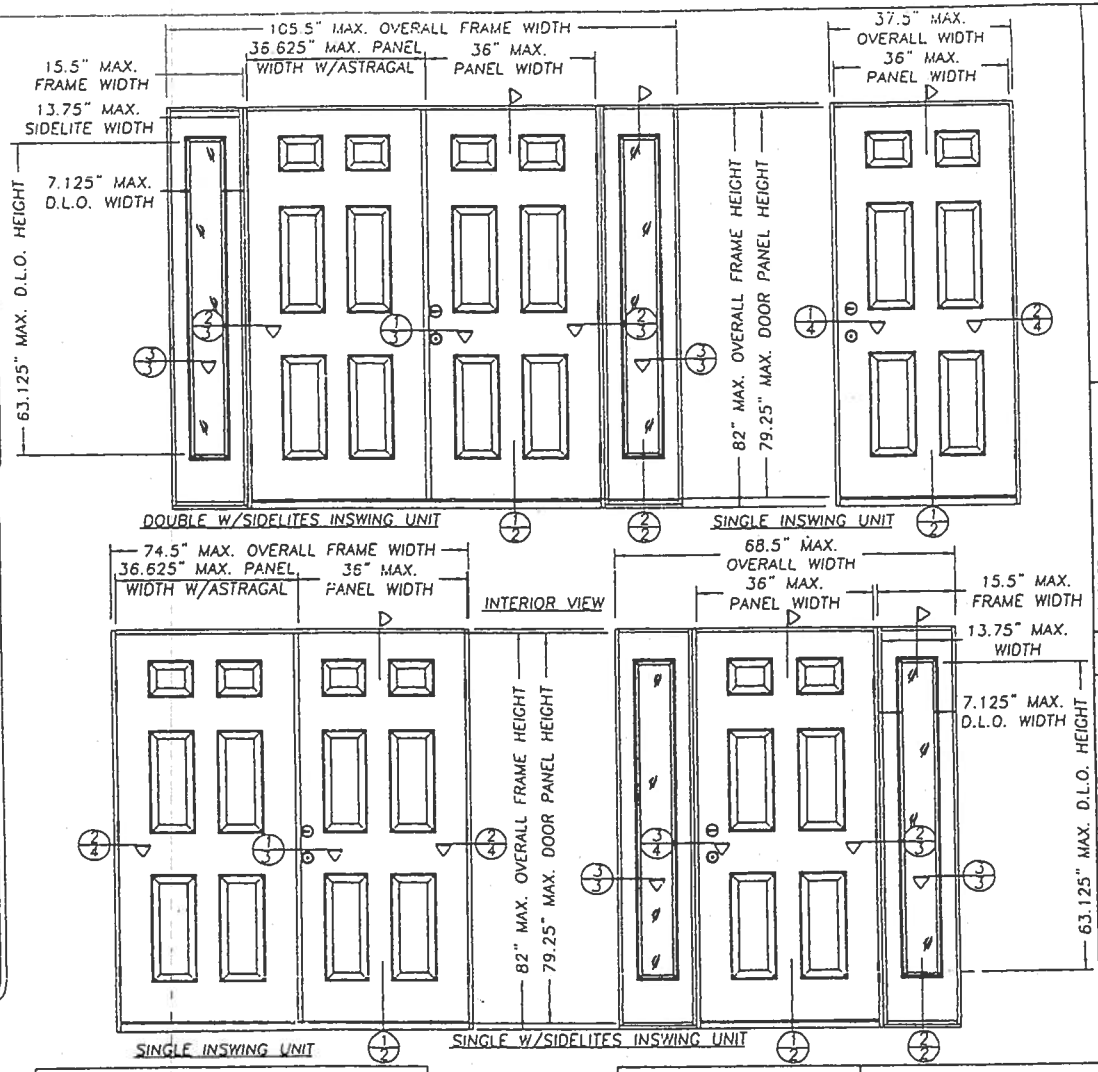


## TABLE OF CONTENTS


| SHEET # | DESCRIPTION |
|---|---|
| 1 | TYPICAL ELEVATIONS & GENERAL NOTES |
| 2 | VERTICAL CROSS SECTIONS |
| 3 | HORIZONTAL CROSS SECTIONS |
| 4 | HORIZONTAL CROSS SECTIONS & NOTES |
| 5 | ANCHORING LOCATIONS & DETAILS |
| 6 | ANCHORING LOCATIONS & GLAZING DETAILS |
| 7 | UNIT COMPONENTS |
| 8 | BILL OF MATERIALS & UNIT COMPONENTS |


## DESIGN PRESSURE RATING

| UNIT TYPE | WHERE WATER INFILTRATION REQUIREMENT IS NOT NEEDED |
|---|---|
| SINGLE | + 67.0 PSF – 67.0 PSF |
| DOUBLE | + 60.0 PSF – 60.0 PSF |
| SINGLE & DOUBLE WITH SIDELITES | + 60.0 PSF – 60.0 PSF |

Approved as complying with the Florida Building Code
Date July 18, 2002
NOA# 01-0818.11
Miami Dade Product Control Division
By


THERMATRU®
108 MUTZFELD Rd.
BUTLER, IN 46721
PH. (219) 868-5811


PRODUCT: "CONSTRUCTION SERIES" 6-8 SINGLE & DOUBLE IN-SWING STEEL DOOR

PART OR ASSEMBLY: TYPICAL ELEVATIONS & GENERAL NOTES

| NO. | DATE | REVISIONS | BY |
|---|---|---|---|
| 2 | 6/12/02 | COR. GLAZING DETAIL | RW |
| 1 | 3/28/02 | GENERAL REVISION | WLN |


RW BUILDING CONSULTANTS, INC.
813.684.3831


DATE: 03/28/01
SCALE: N.T.S.
DWG. BY: TJH
CHK. BY: RW
DRAWING NO.: S-2114
SHEET 1 OF 8

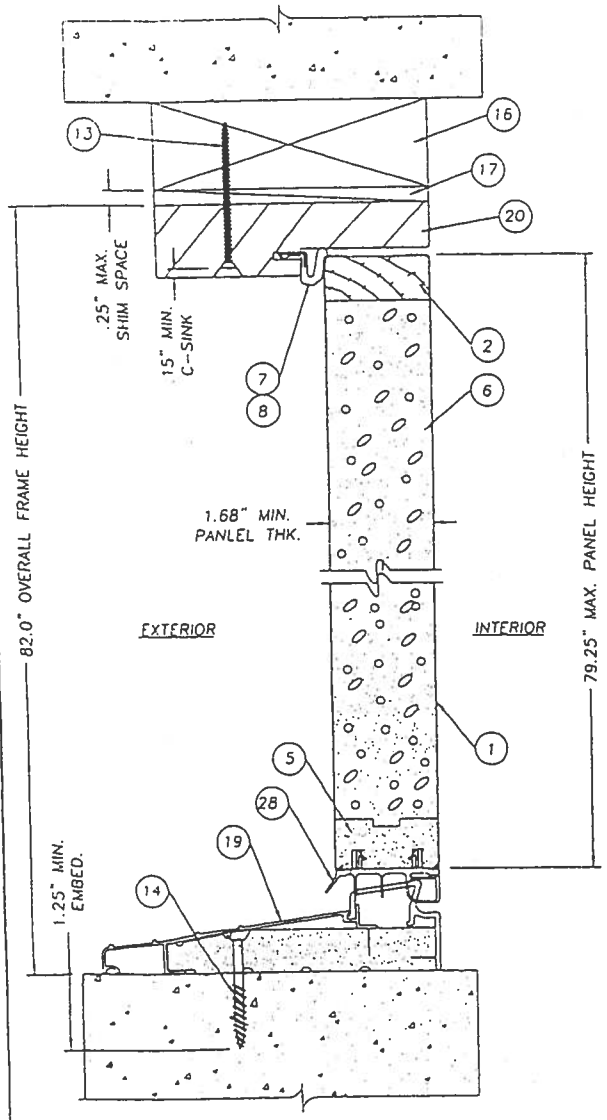


1/2 VERTICAL CROSS SECTION
DOOR PANEL W/ SELF ADJUSTING SADDLE THRESHOLD

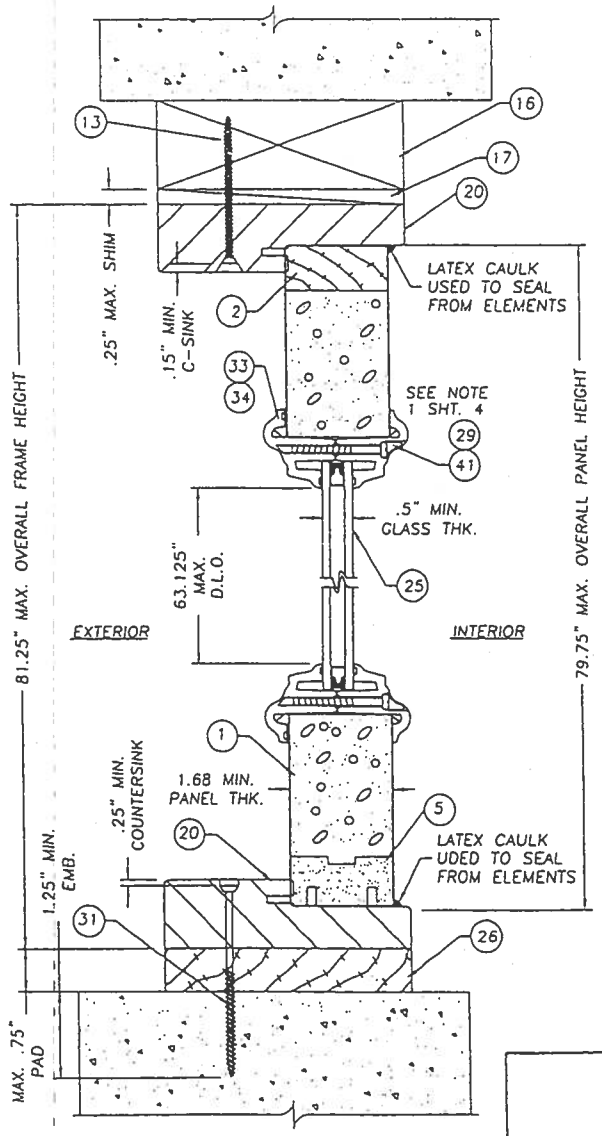


2/2 VERTICAL CROSS SECTION
SIDELITE PANEL

Approved as complying with the Florida Building Code
Date July 16, 2002
NOA# 01-0828.11
Miami Dade Product Control Division
By:

THERMATRU®
108 MUTZFELD Rd.
BUTLER, IN 46721
PH. (219) 868-5811

PRODUCT: "CONSTRUCTION SERIES" 6-8 SINGLE & DOUBLEW/ IN-SWING STEEL DOOR

PART OR ASSEMBLY: VERTICAL CROSS SECTIONS

| NO. | DATE | REVISIONS | BY |
|---|---|---|---|
| 2 | 6/12/02 | COR. GLAZING DETAIL | RW |
| 1 | 3/28/02 | GENERAL REVISION | WLN |

RW BUILDING CONSULTANTS, INC
813.684.3831

DATE: 03/28/01
SCALE: N.T.S.
DWG. BY: TJH
CHK. BY: RW
DRAWING NO.: S-2114
SHEET 2 OF 8

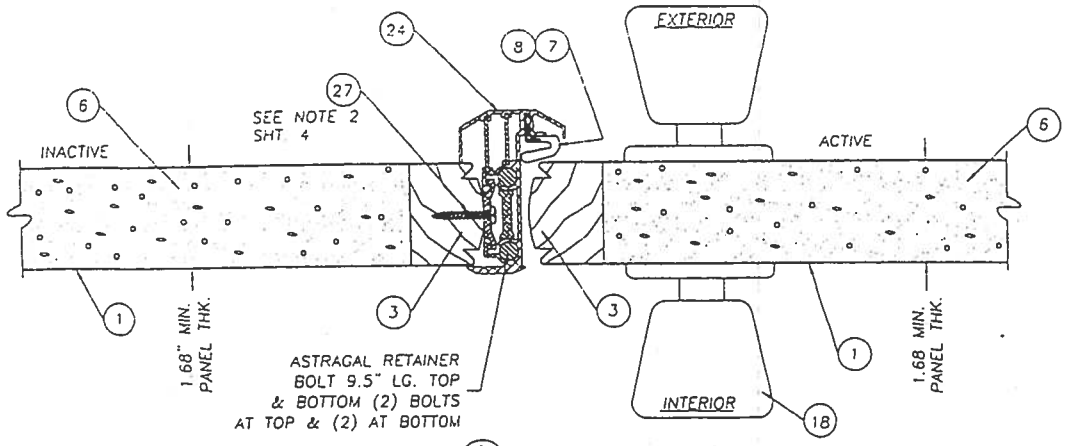


1/3 HORIZONTAL CROSS SECTION
@ ASTRAGAL

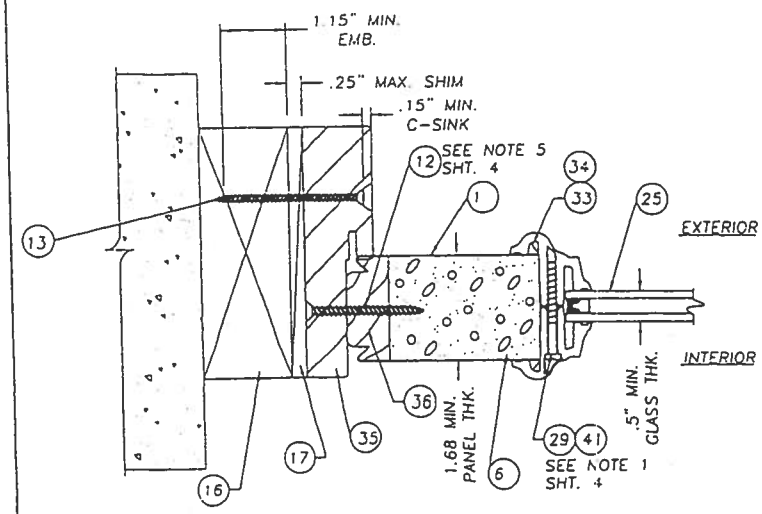


3/3 HORIZONTAL CROSS SECTION
@ SIDELITE TO BUCK

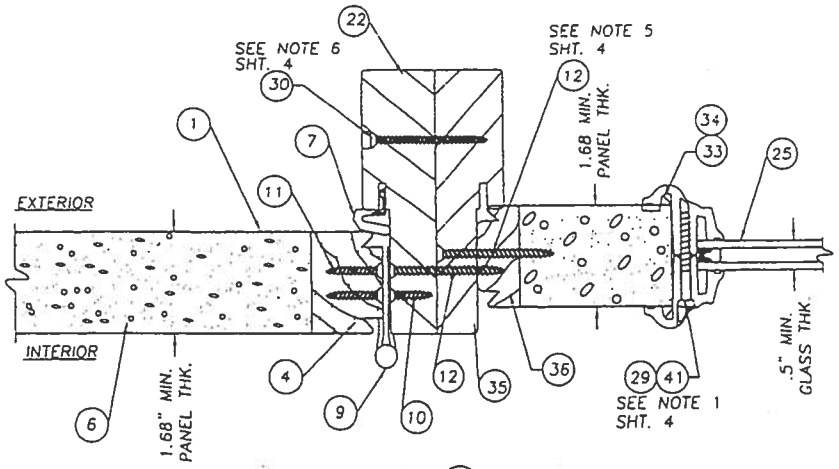


2/3 HORIZONTAL CROSS SECTION
@ HINGE JAMB TO SIDELITE

Approved as complying with the Florida Building Code
Date July 18, 2001
NOA# 01-0628.11
Miami Dade Product Control Division
By

THERMATRU®
108 MUTZFELD Rd.
BUTLER, IN 46721
PH. (219) 868-5811

PRODUCT: "CONSTRUCTION SERIES" 6-8 SINGLE & DOUBLE IN-SWING STEEL DOOR

PART OR ASSEMBLY: HORIZONTAL CROSS SECTIONS

| NO | DATE | REVISIONS | BY |
|---|---|---|---|
| 2 | 6/12/02 | COR. GLAZING DETAIL | RW |
| 1 | 3/28/02 | GENERAL REVISION | WLN |

RW BUILDING CONSULTANTS, INC
813.684.3831

DATE: 03/28/01
SCALE: N.T.S.
DWG. BY: TJH
CHK. BY: RW
DRAWING NO.: S-2114
SHEET 3 OF 8

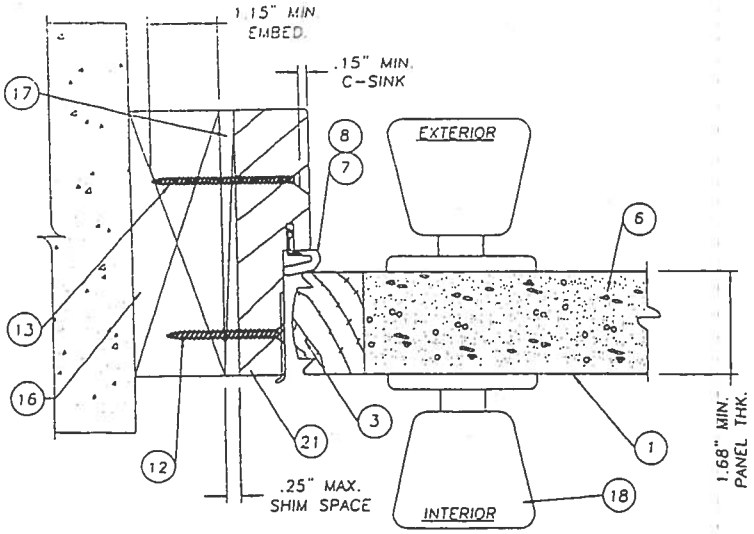


1/4 HORIZONTAL CROSS SECTION
LATCH JAMB TO BUCK.

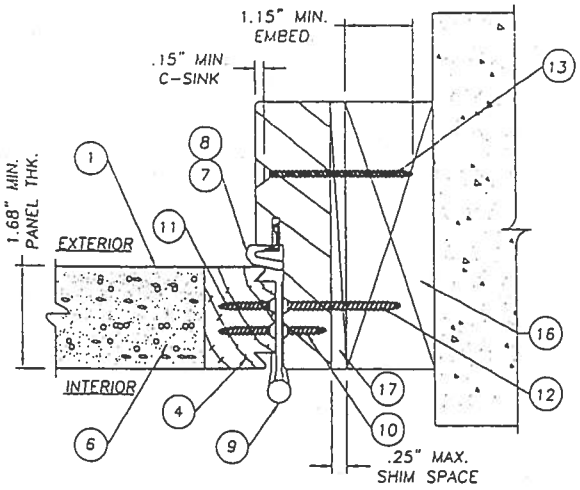


2/4 HORIZONTAL CROSS SECTION
HINGE JAMB TO BUCK.

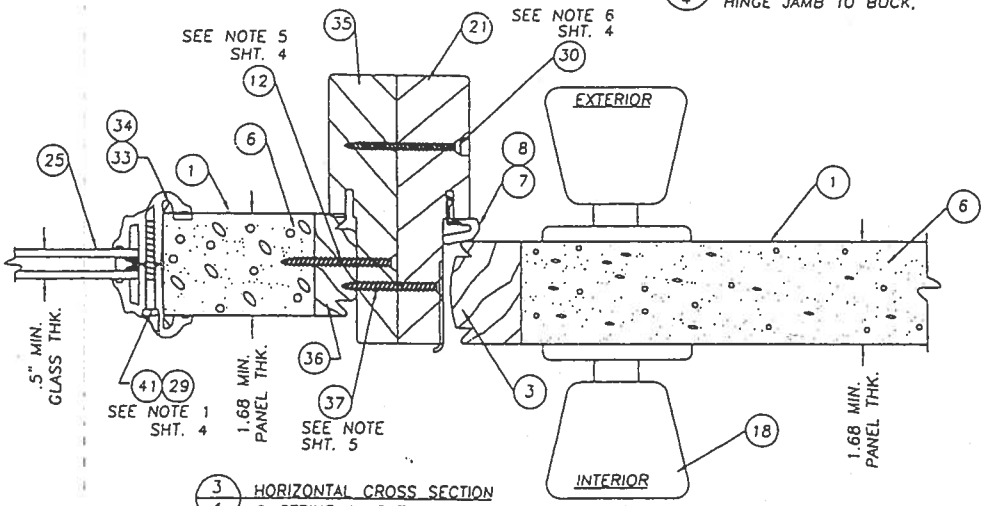


3/4 HORIZONTAL CROSS SECTION
© STRIKE JAMB TO SIDELITE

NOTES:

1. SPACING FOR ITEM #29 & #41 (LITE FRAME SCREWS) IS AS FOLLOWS: FROM THE TOP DOWN ON SIDES; 3", 14.75", 26.5", 38.25", 50.5" & 62.25". THERE IS (1) SCREW BOTH TOP AND BOTTOM AT 4.25" IN FROM CORNER.
2. SPACING FOR ITEM #27 #8 x 1" PANHEAD SCREW ATTACHING THE ASTRAGAL TO THE INACTIVE DOOR IS AS FOLLOWS: FROM THE BOTTOM UP AND TOP DOWN 1", 3", 5",, 18.25", 40.5", 59.25", 74.25", 76.25" AND 78.25".
3. THE HEAD JAMB IS ATTACHED TO THE SIDE JAMBS WITH (3) 16GA. x 1/2" CROWN x 2" STAPLES AT BOTH SIDE.
4. THE THRESHOLD IS ATTACHED TO THE SIDE JAMBS WITH (2) 16GA. x 1/2" CROWN x 2.5" STAPLES AT BOTH SIDE.
5. THE SIDELITE IS DIRECT SET INTO THE JAMB WITH ITEM #12 #10 x 2" PFH WOOD SCREW AT 6" DOWN FROM EACH CORNER AND A MAX. OF 12" O.C. ON THE SIDE JAMBS ONLY.
6. SPACING FOR ITEM #30, A #8 x 2.0" SCREW SECURING THE MULLIONS TOGETHER IS THE SAME AS THE PERIMETER ANCHORING SCREWS. 6" DOWN FROM THE TOP AND UP FROM THE BOTTOM WITH (4) MORE SPACED AT 14.0" O.C.

Approved as complying with the Florida Building Code
Date July 18, 2002
NOA# 01-0848.11
Miami Dade Product Control Division
By _____


THERMOTRU®
108 MUTZFELD Rd.
BUTLER, IN 46721
PH. (219) 868-5811


PRODUCT: "CONSTRUCTION SERIES" 6-8 SINGLE & DOUBLE IN-SWING STEEL DOOR

PART OR ASSEMBLY: HORIZONTAL CROSS SECTIONS & NOTES

| NO. | DATE | REVISIONS | BY |
|---|---|---|---|
| 2 | 6/12/02 | COR. GLAZING DETAIL | RW |
| 1 | 3/28/02 | GENERAL REVISION | WLN |


RW BUILDING CONSULTANTS, INC.
813.684.3831


DATE: 03/28/01
SCALE: N.T.S.
DWG. BY: TJH
CHK. BY: RW
DRAWING NO.: S-2114
SHEET 4 OF 8

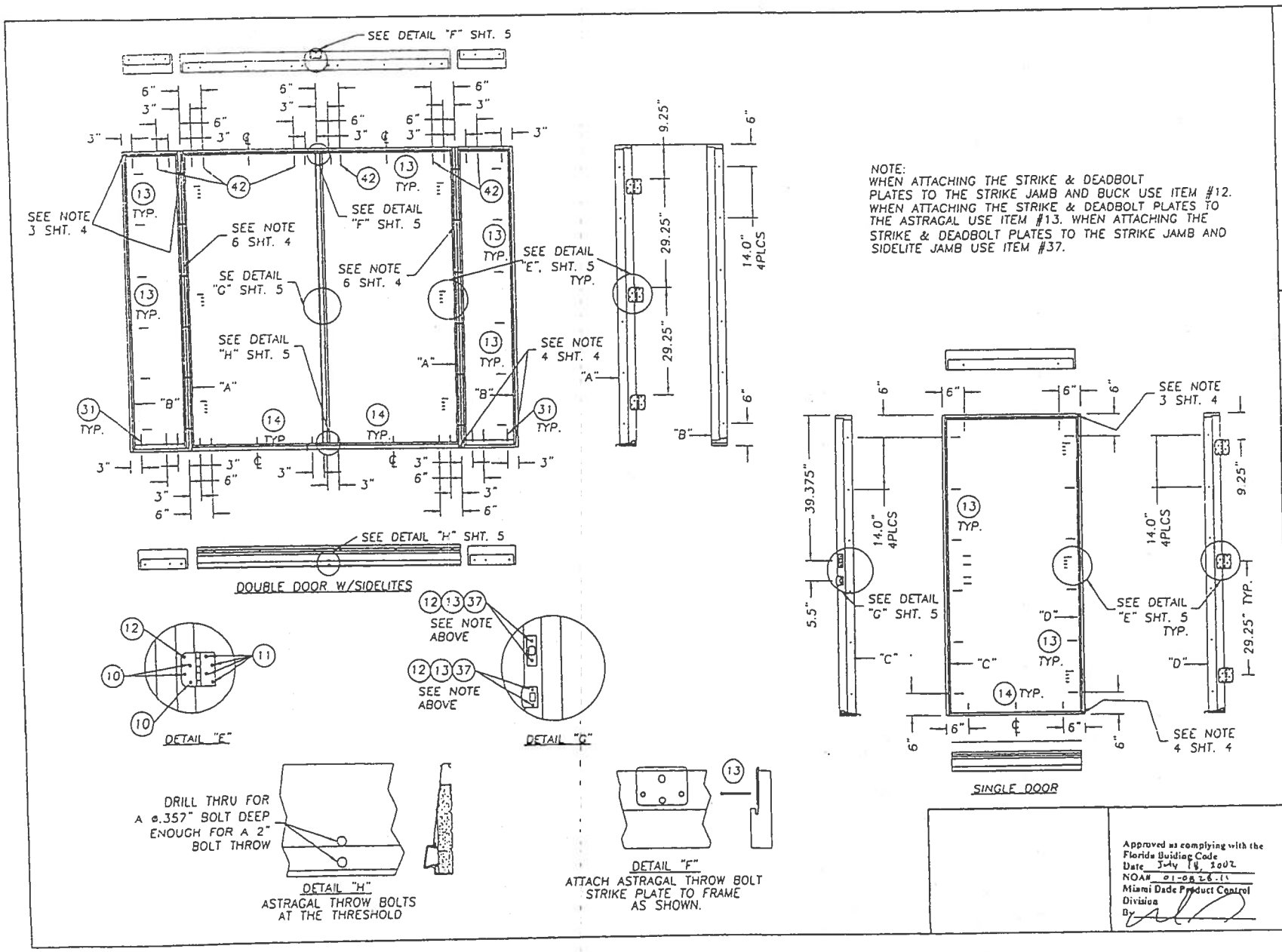


NOTE:
WHEN ATTACHING THE STRIKE & DEADBOLT PLATES TO THE STRIKE JAMB AND BUCK USE ITEM #12. WHEN ATTACHING THE STRIKE & DEADBOLT PLATES TO THE ASTRAGAL USE ITEM #13. WHEN ATTACHING THE STRIKE & DEADBOLT PLATES TO THE STRIKE JAMB AND SIDELITE JAMB USE ITEM #37.

Approved as complying with the Florida Building Code
Date July 18, 2002
NOA# 01-0826.11
Miami Dade Product Control Division
By

THERMATRU®
108 MUTZFELD Rd.
BUTLER, IN 46721
PH. (219) 868-5811

PRODUCT: "CONSTRUCTION SERIES" 6-8 SINGLE & DOUBLE IN-SWING STEEL DOOR

PART OR ASSEMBLY: ANCHORING LOCATIONS & DETAILS

| NO | DATE | REVISIONS | BY |
|---|---|---|---|
| 2 | 6/12/02 | COR. GLAZING DETAIL | RW |
| 1 | 3/28/02 | GENERAL REVISION | WLN |

RW BUILDING CONSULTANTS, INC
813.684.3831

DATE: 03/28/01
SCALE: N.T.S.
DWG. BY: TJH
CHK. BY: RW
DRAWING NO.: S-2114
SHEET 5 OF 8

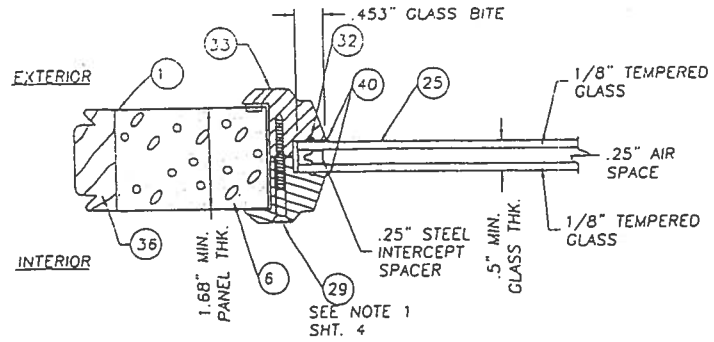


.5" INSULATED GLASS W/ PVC LITE FRAME GLAZING DETAIL

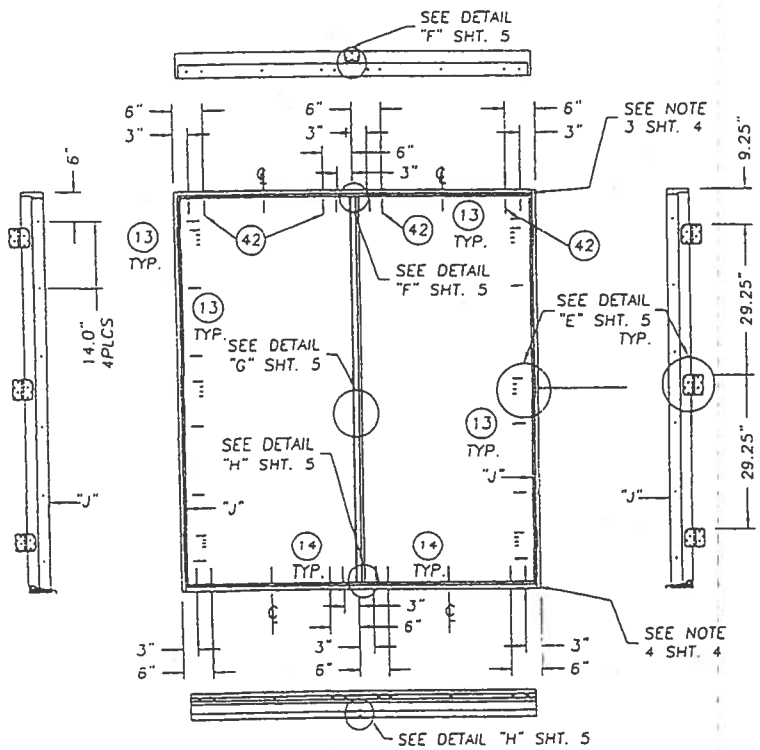


DOUBLE DOOR

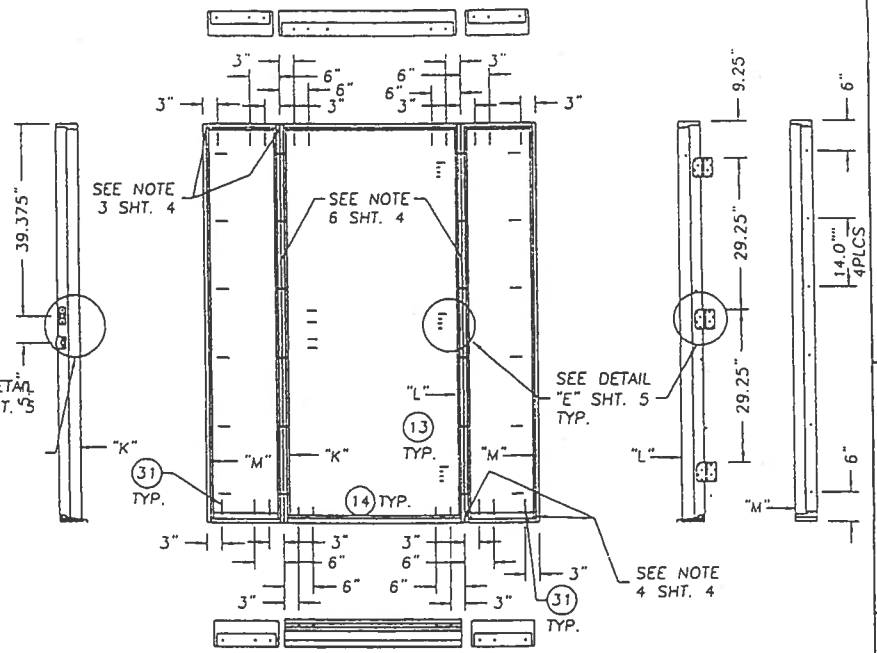


SINGLE DOOR W/SIDELITES

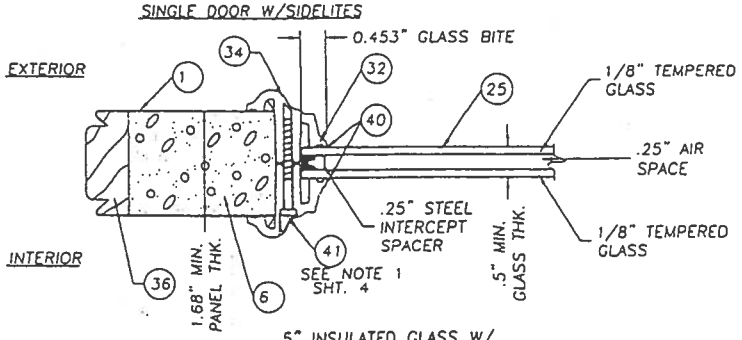


.5" INSULATED GLASS W/ BTS LITE FRAME GLAZING DETAIL

Approved as complying with the Florida Building Code
Date July 16, 2002
NOA# 01-0928.11
Miami Dade Product Control Division
By

THERMOTRU®
108 MUTZFELD Rd.
BUTLER, IN 46721
PH. (219) 868-5811

PRODUCT: "CONSTRUCTION SERIES" 6-8 SINGLE & DOUBLE IN-SWING STEEL DOOR

PART OR ASSEMBLY: ANCHORING LOCATIONS & GLAZING DETAILS

| NO | DATE | REVISIONS | BY |
|---|---|---|---|
| 2 | 6/12/02 | COR. GLAZING DETAIL | RW |
| 1 | 3/28/02 | GENERAL REVISION | WLN |

RW BUILDING CONSULTANTS, INC
813.684.3831

DATE: 03/28/01
SCALE: N.T.S.
DWG. BY: TJH
CHK. BY: RW
DRAWING NO.: S-2114
SHEET 6 OF 8

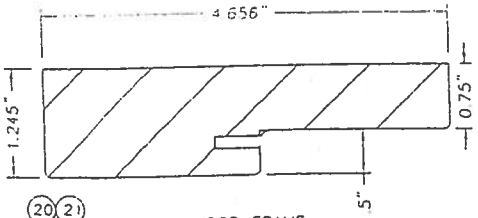


20 21 22 35

WOOD FRAME
FINGER JOINTED PONDEROSA PINE

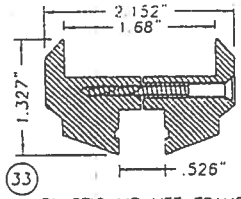


33

PLASTIC LIP LITE FRAME
EXTRUDED PVC

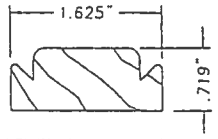


36

SIDELITE BLANK SIDE STILE
FINGER JOINTED PONDEROSA PINE

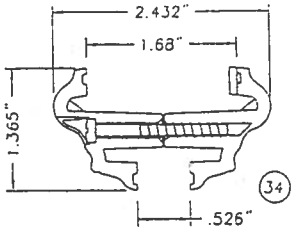


34

BTS PLASTIC LIP LITE FRAME
EXTRUDED BTS

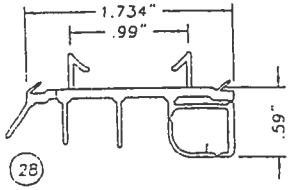


28

INSWING DOOR BOTTOM SWEEP
EXTRUDED VINYL .080"
WALL MAX. .034" WALL MIN.

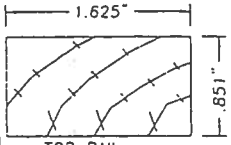


2

TOP RAIL
FINGER JOINTED PONDEROSA PINE

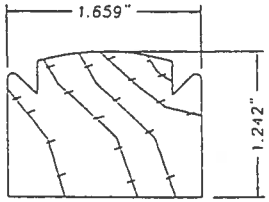


3

WOOD LATCH SIDE STILE

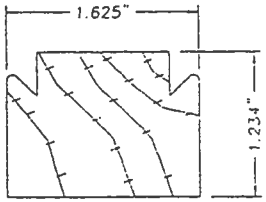


WOOD HINGE SIDE STILE 4

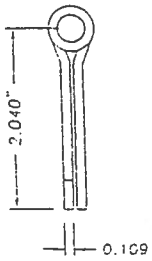


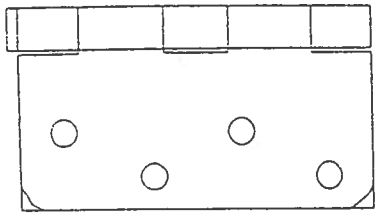

9

4 x 4 STEEL DOOR HINGE

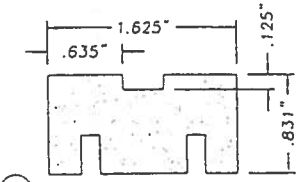


5

BOTTOM RAIL, WOOD COMPOSITE

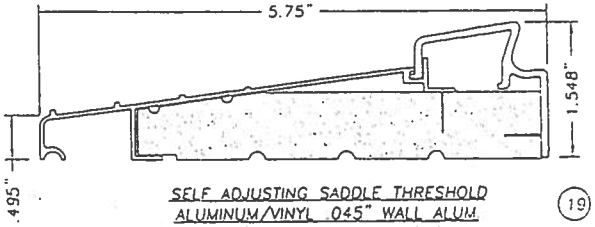


SELF ADJUSTING SADDLE THRESHOLD
ALUMINUM/VINYL .045" WALL ALUM.
.080" THK. WALL VINYL TYP.

19

Approved as complying with the Florida Building Code
Date July 19, 2002
NOA# 01-0817.11
Miami Dade Product Control Division
By


THERMATRU®
108 MUTZFELD Rd.
BUTLER, IN 46721
PH. (219) 868-5811


PRODUCT: "CONSTRUCTION SERIES" 6-8' SINGLE & DOUBLE IN-SWING STEEL DOOR

PART OR ASSEMBLY: UNIT COMPONENTS

| NO. | DATE | BY | REVISIONS |
|---|---|---|---|
| 2 | 6/12/02 | RW | COR. GLAZING DETAIL |
| 1 | 3/29/02 | WLN | GENERAL REVISION |


RW BUILDING CONSULTANTS, INC
813.684.3831


DATE: 03/28/01
SCALE: N.T.S
DWG. BY: TJH
CHK. BY: RW
DRAWING NO: S-2114
SHEET 7 OF 8

| Item | DESCRIPTION | Material |
|---|---|---|
| 1 | DOOR SKIN: CONSTRUCTION SERIES 25GA. (.018" MIN.) | STEEL |
| 2 | TOP RAIL (1.628" x .851" THERMA-TRU PONDEROSA PINE) | WOOD |
| 3 | LATCH STILE (THERMA-TRU, PONDEROSA PINE 1.659" x 1.242") | WOOD |
| 4 | HINGE STILE (THERMA-TRU, PONDEROSA PINE 1.625" x 1.234") | WOOD |
| 5 | BOTTOM RAIL (1.628" x .831" THERMA-TRU WOOD COMPOSITE) | WOOD COMPOSITE |
| 6 | POLYURETHANE FOAM (BASF, 1.9lbs. DENSITY) | FOAM |
| 7 | SHORT REACH COMPRESSION WEATHERSTRIP (THREMA-TRU) | FOAM |
| 8 | LONG REACH COMPRESSION WEATHERSTRIP (THREMA-TRU) | FOAM |
| 9 | 4" x 4" HINGE .097" THK. (THERMA-TRU) | STEEL |
| 10 | #10 x 3/4" lg. PFH WOOD SCREW (Hinge to Frame) | STEEL |
| 11 | #10 x 1" LG. PFH WOOD SCREW | STEEL |
| 12 | #10 x 2" LG. PFH WOOD SCREW | STEEL |
| 13 | #8 x 2 1/2" LG. PFH WOOD SCREW | STEEL |
| 14 | 3/16" x 2.0" MIN. TAPCON ANCHOR (ELCO) | STEEL |
| 15 | NOT USED | CONC. |
| 16 | 2x WOOD BUCK | WOOD |
| 17 | MAX. 1/4" SHIM MATERIAL | WOOD |
| 18 | KWIKSET TITAN 700 SERIES PASSAGE LOCK | – |
| 19 | SELF ADJUSTING INSWING SADDLE THRESHOLD | ALUM./WOOD |
| 20 | 4.656" HEADER (THERMA-TRU, PONDEROSA PINE) | WOOD |
| 21 | 4.656" STRIKE JAMB (THERMA-TRU, PONDEROSA PINE) | WOOD |
| 22 | 4.656" HINGE JAMB (THERMA-TRU, PONDEROSA PINE) | WOOD |
| 23 | KWIKSET TITAN 700 SERIES DEADBOLT | – |
| 24 | ASTRAGAL WINDJAMBER II WR68T (.052" WALL) | ALUM. |
| 25 | GLAZING, 1/2" INSULATED TEMPERED GLASS | GLASS |
| 26 | 3/4" THK. PRESSURE TREATED SIDELITE PAD | WOOD |
| 27 | #8 x 1" LG. PANHEAD SHEET METAL SCREW | STEEL |
| 28 | INSWING DOOR BOTTOM SWEEP | VINYL |
| 29 | #6-18 x 1 3/4" PHILLIPS FLATHEAD SCREW (FOR ITEM #33) | STEEL |
| 30 | #8 x 2" LG. PFH WOOD SCREW | STEEL |
| 31 | 3/16" x 3 1/4" MIN. TAPCON ANCHOR (ELCO) | STEEL |
| 32 | 1/8 THK. CELLULAR GLAZING TAPE (STIK-II TAPE) | – |
| 33 | PLASTIC LIP LITE FRAME (PVC, THERMA-TRU) | PVC |
| 34 | PLASTIC LIP LITE FRAME (BTS, THERMA-TRU) | BTS |
| 35 | 4.656" BLANK JAMB (THERMA-TRU, PONDEROSA PINE) | WOOD |
| 36 | SIDELITE SIDE STILE (THERMA-TRU, 1.625" x .719" PONDEROSA PINE) | WOOD |
| 37 | #10 x 1 3/4" LG. PFH WOOD SCREW | STEEL |
| 38 | NOT USED | – |
| 39 | NOT USED | – |
| 40 | SILICONE CAULK | SILICONE |
| 41 | #8-10 x 1 1/2" PLASCREW (FOR ITEM #34) | STEEL |
| 42 | #10 x 3" LG. PFH WOOD SCREW | STEEL |
| 43 | SIDELIGHT: CONSTRUCTION SERIES 24 GA. (0.021") | STEEL |

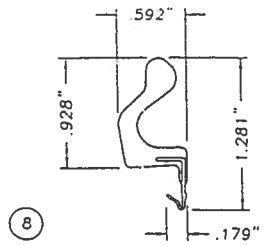


(8)

LONG REACH COMPRESSION WEATHERSTRIP
FOAM CELL CORE W/VINYL JACKET

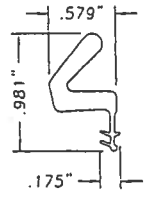


(7)

COMPRESSION WEATHERSTRIP
BY THERMA-TRU
FOAM CELL CORE W/VINYL JACKET

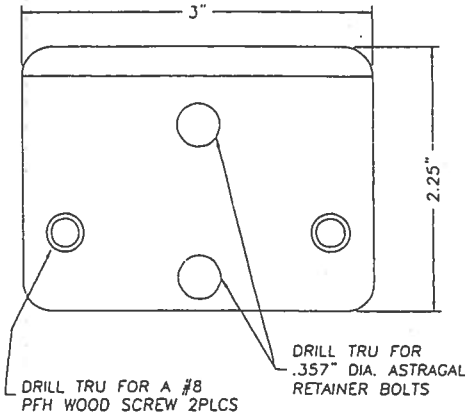


WINDJAMBER II WR68T STRIKE PLATE

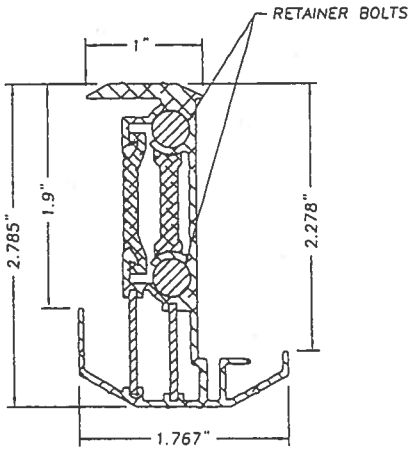


(24)

WINDJAMBER II WR68T
ASTRAGAL (ALUMINUM .052" WALL TYP.)

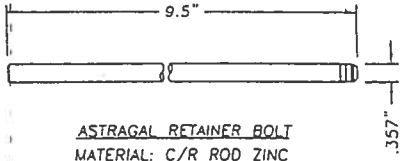


ASTRAGAL RETAINER BOLT
MATERIAL: C/R ROD ZINC
& YELLOW CHROMATE

Approved as complying with the Florida Building Code
Date July 18, 2002
NOA# 01.0828.11
Miami Dade Product Control Division
By


THERMA-TRU®
108 MUTZFELD Rd.
BUTLER, IN 46721
PH. (219) 868-5811


PRODUCT: "CONSTRUCTION SERIES" 6-8 SINGLE & DOUBLE IN-SWING STEEL DOOR

PART OR ASSEMBLY: BILL OF MATERIALS & UNIT COMPONENTS

| NO. | DATE | REVISIONS | BY |
|---|---|---|---|
| 2 | 6/12/02 | COR. GLAZING DETAIL | RW |
| 1 | 3/28/02 | GENERAL REVISION | WIN |


RW BUILDING CONSULTANTS, INC
813.684.3831


DATE: 03/28/01
SCALE: N.T.S.
DWG. BY: TJH
CHK. BY: RW
DRAWING NO.: S-2114
SHEET 8 OF 8

# Therma-Tru® Construction Series Wood Edge Out-swing Steel Door
## Maximum Size Up To 8'4 x 6'8

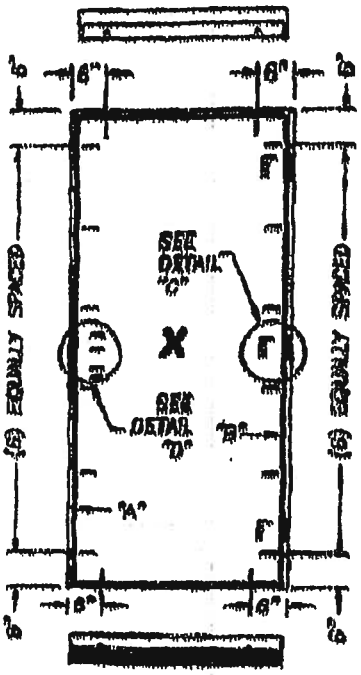


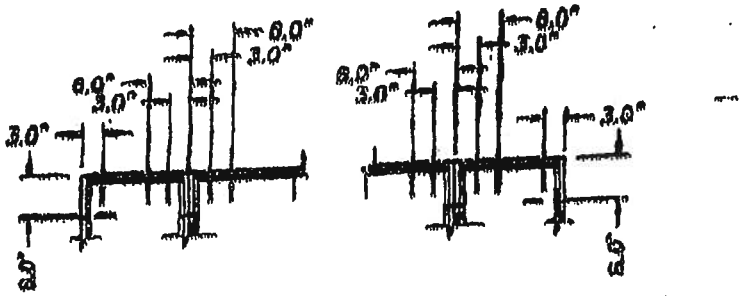


When attaching Sidelite the above anchoring applies.

DETAIL "C"

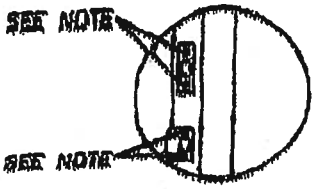


DETAIL "D"

Note:
When attaching the strike & deadbolt plates to the strike & buck use #10 x 2" Lg. PFH WB.
When attaching the strike & deadbolt plates to the astragal use #8 x 2 1/2" Lg. PFH WB.
When attaching the strike jamb & sidelite jamb use #10 x 1 3/4" Lg. PFH WB.

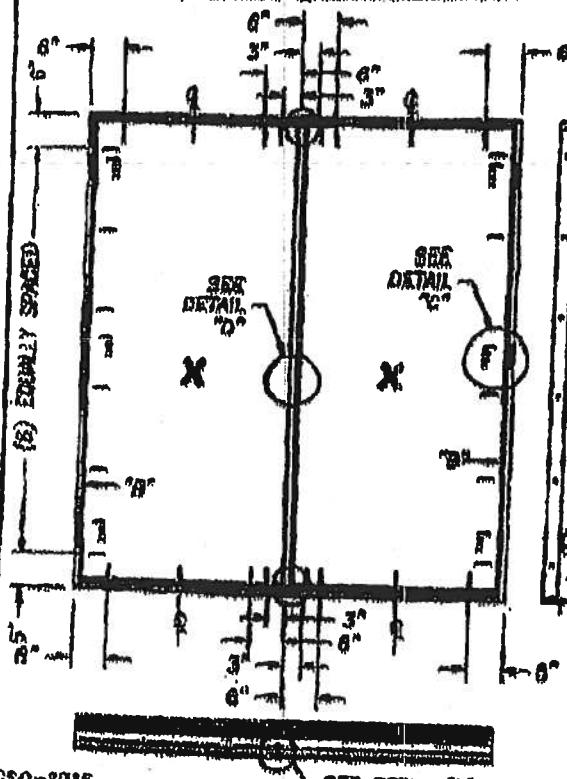


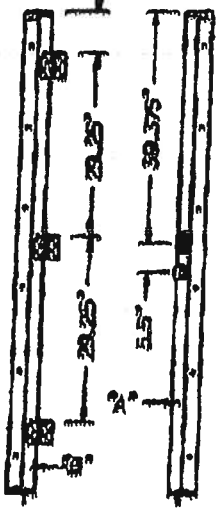


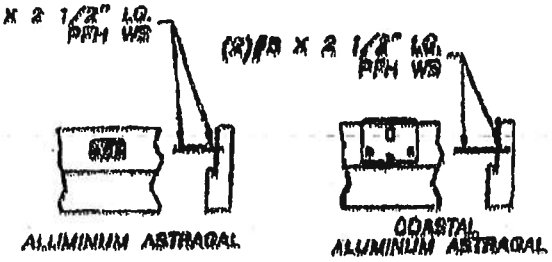


DETAIL "E"
ATTACH ASTRAGAL THROW BOLT STRIKE PLATE TO FRAME AS SHOWN.

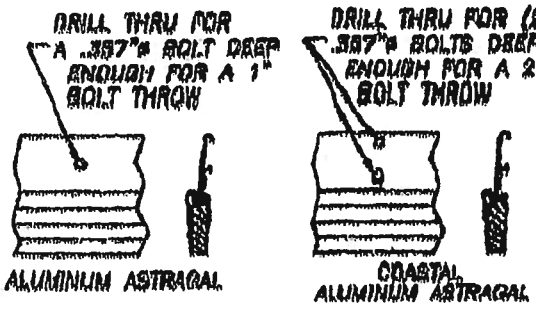


DETAIL "F"
ASTRAGAL THROW BOLTS AT THE THRESHOLD

CEQ-301F

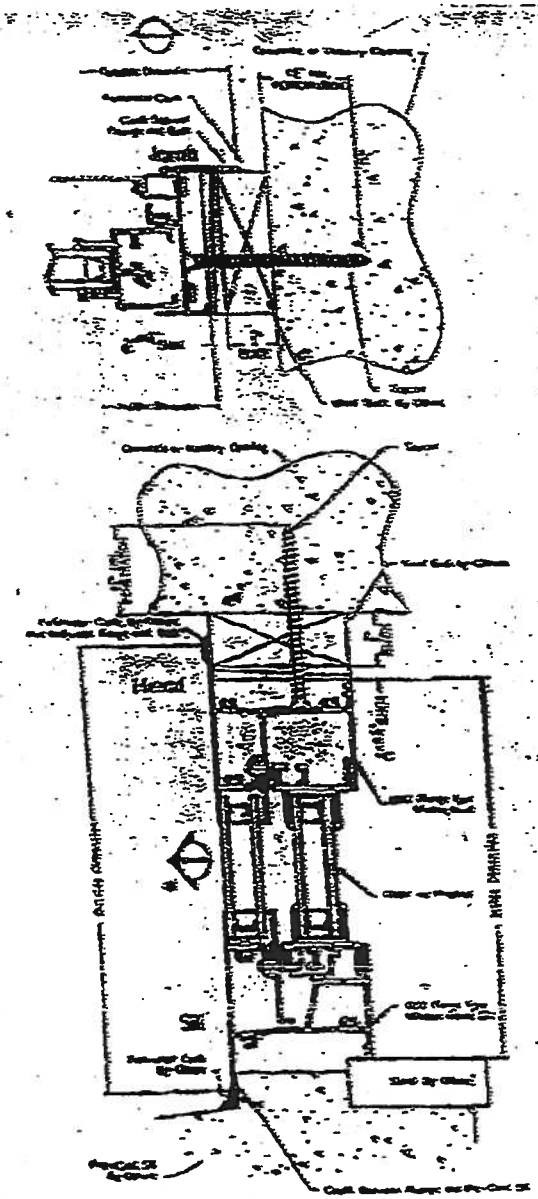
Head

| [illegible] | [illegible] | [illegible] | [illegible] |
|---|---|---|---|
| [illegible] | [illegible] | [illegible] | [illegible] |
| [illegible] | [illegible] | [illegible] | [illegible] |
| [illegible] | [illegible] | [illegible] | [illegible] |

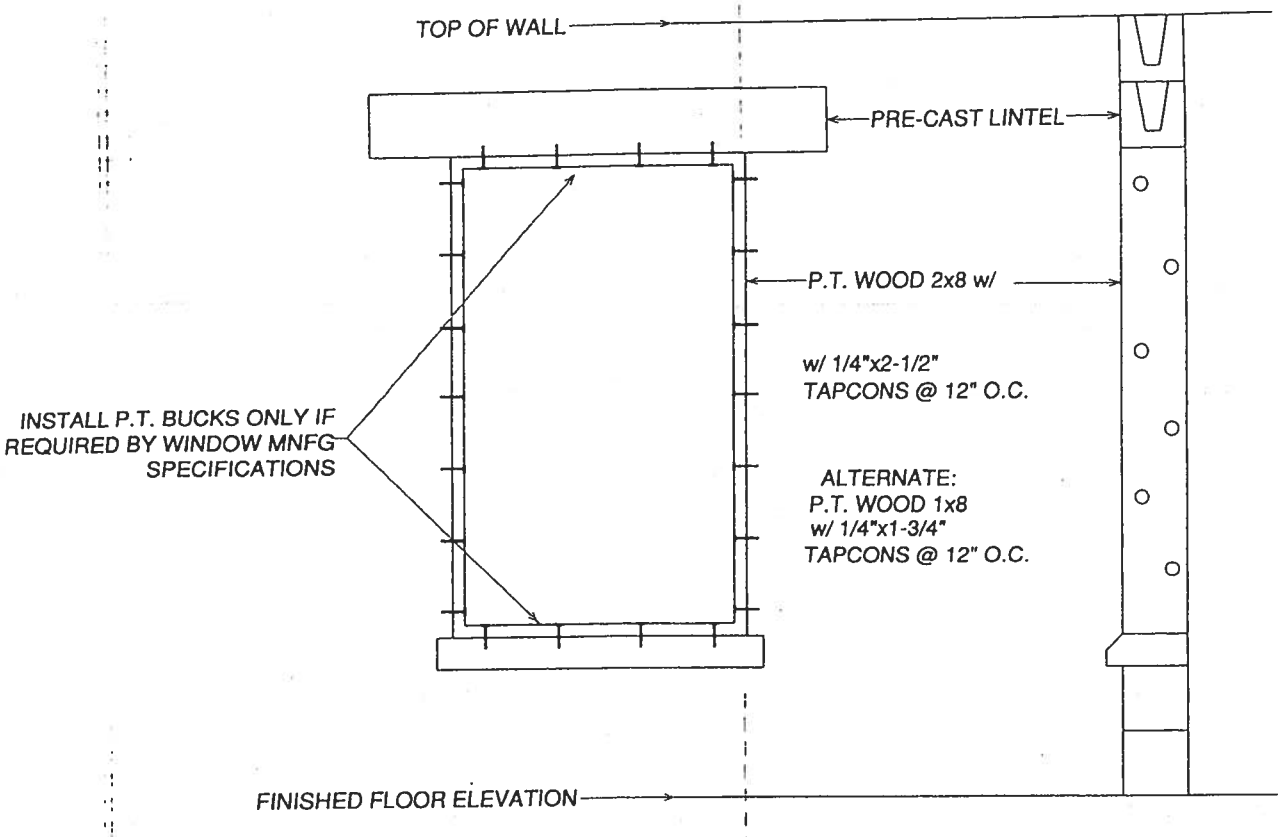


# WINDOW BUCK DETAIL

@ EXTERIOR WALL

SCALE 1/2" = 1'-0"

PAUL DIXIE RIDDLE
LICENSE
No. 36889
STATE OF FLORIDA
PROFESSIONAL ENGINEER

12-16-05

DESIGN WIND SPEED = 110 MPH 3 SEC GUST
FLORIDA BUILDING CODE 2004 RESIDENTIAL
DESIGN WIND PRESSURE = +21.8, - 29.1 PSF

DETAIL IS TO BE PLACED ON FILE
FOR HOMES BY WHITTAKER

WINDOW BUCK DETAIL

HOMES BY WHITTAKER

RIDDLE CONSULTING ENGINEERS
CIVIL MECHANICAL STRUCTURAL
1720 S.E. COUNTY HWY 484
Belleview, Florida 34420
(352) 245-7041

| scale | drawn | date | Proj No. | Page |
|---|---|---|---|---|
| NTS | PDR | 12/16/05 | N/A | 1 OF 1 |

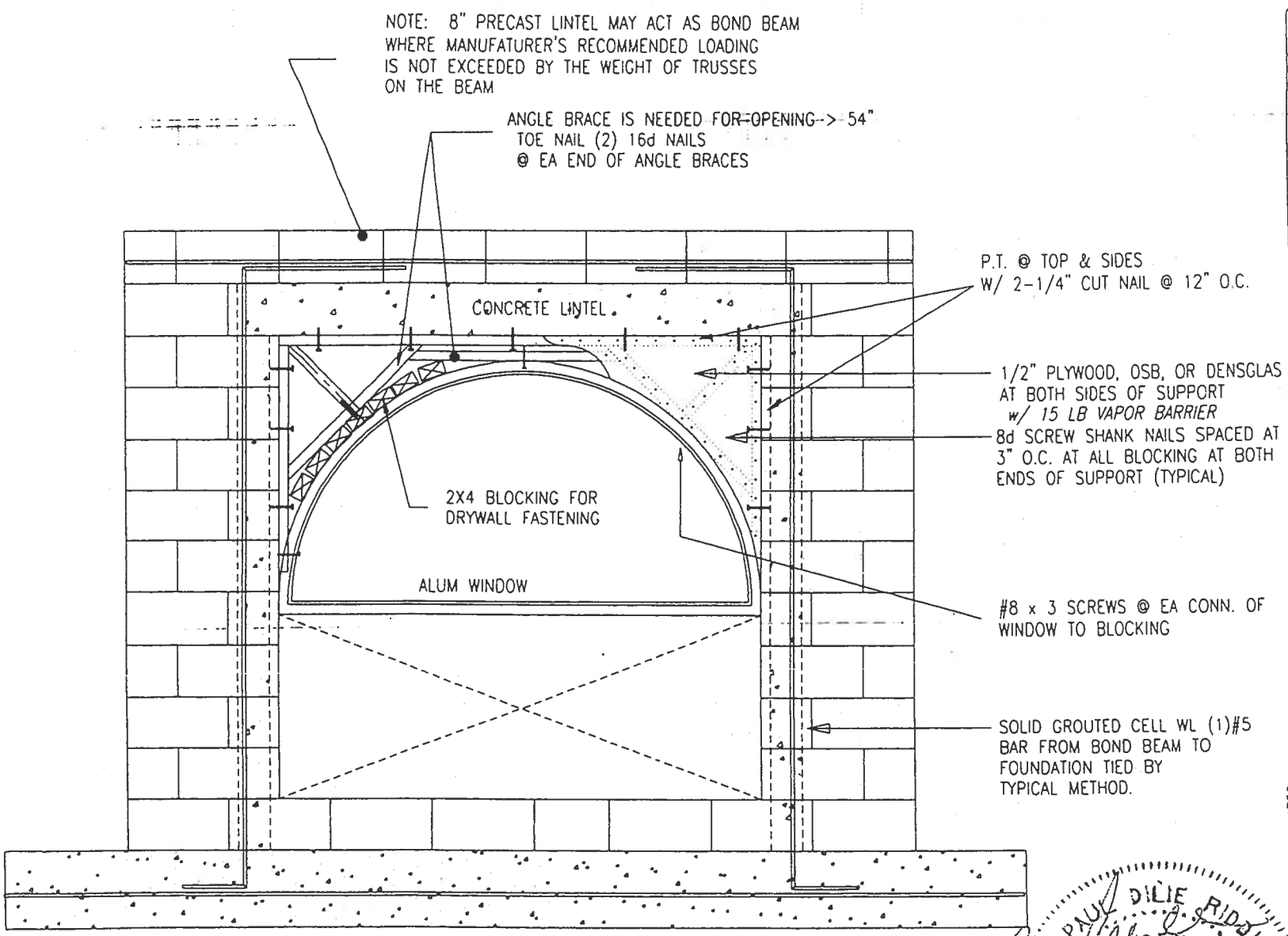


## FRAMING DETAIL @ NON-RECTANGULAR MASONRY OPENING

1. DETAIL APPLIES TO WINDOWS RANGING IN WIDTH FROM 20" TO 76"
2. HALF ROUND DESIGN IS FOR PRESENTATION PURPOSES ONLY. EYEBROW TYPE AND OTHER SIMILAR SHAPES ARE ALSO PERMITTED UNDER THIS CONFIGURATION.

ENGINEER'S NOTES (FL BLDG CODE 2004 RESIDENTIAL)

1. DESIGN WIND SPEED = 110 MPH, EXPOSURE B, ENCLOSED
2. LIVE LOAD ROOF = 20 PSF, DEAD LOAD = 12 PSF, FBC 2001

*DETAIL TO BE PLACED ON FILE FOR USE BY HOMES BY WHITTAKER - EXPIRES 12-31-06*

PAUL DILIE RIDDLE LICENSE No. 36089 STATE OF FLORIDA PROFESSIONAL ENGINEER

ARCHED WINDOW FRAMING DETAIL

HOMES BY WHITTAKER

12/16/05

1/4"=1'0"

RIDDLE CONSULTING ENGINEERS
1720 S.E. COUNTY HWY 484
Belleview, Florida 34420
(352) 245-7041
CERTIFICATE OF AUTHORIZATION: 4759
CIVIL MECHANICAL STRUCTURAL

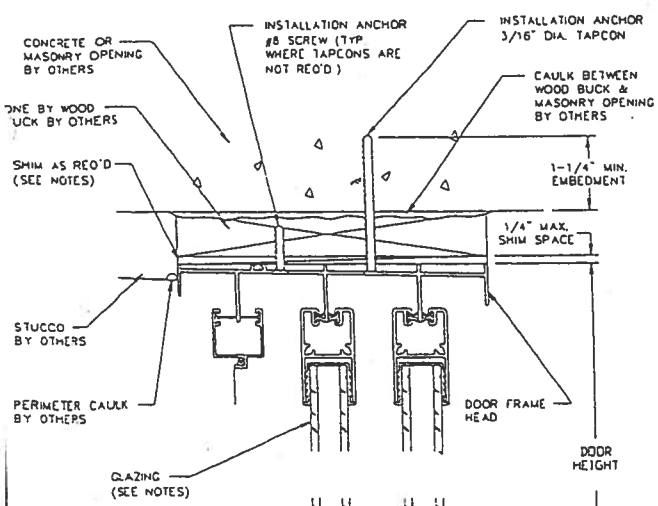


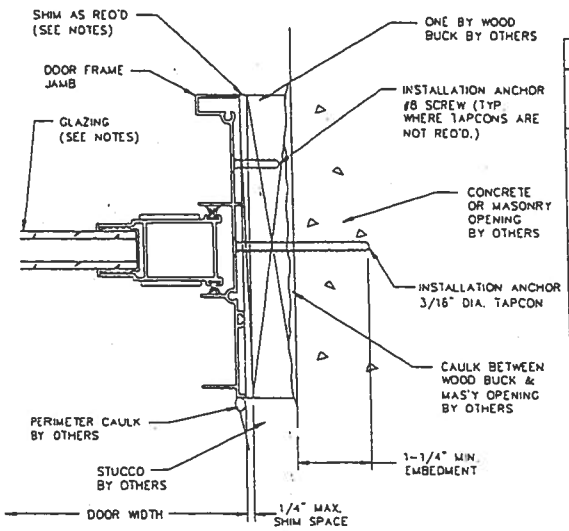


SECTION B-B

## TAPCON INSTALLATION CHART

| CALL SIZE | DOOR SIZE | LOCATION IN HEAD & SILL | | | EA JAMB | QTY IN HOOK STRIP | | |
|---|---|---|---|---|---|---|---|---|
| | | UP TO 45 PSF DP | 46 PSF TO 60 PSF DP | 61 PSF TO 70 PSF DP | UP TO 70 PSF DP | UP TO 45 PSF DP | 46 PSF TO 60 PSF DP | 61 PSF TO 70 PSF DP |
| 5068 XO, OX, XX | 60 X 80 | 3 | 3 | 3 | 4 | 3 | 4 | 4 |
| 6068 XO, OX, XX | 72 X 80 | 4 | 4 | 4 | 4 | 3 | 4 | 5 |
| 8068 XO, OX, XX | 96 X 80 | 5 | 5 | 5 | 4 | 3 | 4 | 5 |
| 10068 XO, OX, XX | 120 X 80 | 6 | 6 | 7 | 4 | 3 | 4 | 5 |
| 5080 XO, OX, XX | 60 X 96 | 3 | 3 | 3 | 5 | 4 | 5 | 6 |
| 6080 XO, OX, XX | 72 X 96 | 3 | 3 | 3 | 5 | 4 | 5 | 6 |
| 8080 XO, OX, XX | 96 X 96 | 4 | 4 | 5 | 5 | 4 | 6 | 6 |
| 10080 XO, OX, XX | 120 X 96 | 6 | 6 | 7 | 5 | 4 | 6 | 6 |
| 7668 OXO | 91-3/4 X 80 | 5 | 5 | 5 | 4 | 3 | 4 | 5 |
| 9068 OXO | 109-3/4 X 80 | 5 | 5 | 6 | 4 | 3 | 4 | 5 |
| 12068 OXO | 145-3/4 X 80 | 7 | 7 | 9 | 4 | 3 | 4 | 5 |
| 15068 OXO | 181-3/4 X 80 | 8 | 10 | 11 | 4 | 3 | 4 | 5 |
| 7680 OXO | 91-3/4 X 96 | 5 | 5 | 5 | 5 | 4 | 6 | 6 |
| 9080 OXO | 109-3/4 X 96 | 5 | 5 | 6 | 5 | 4 | 6 | 6 |
| 12080 OXO | 145-3/4 X 96 | 7 | 8 | 9 | 5 | 4 | 6 | 6 |
| 15080 OXO | 181-3/4 X 96 | 8 | 11 | 13 | 5 | 4 | 6 | 6 |
| 7668 XIX | 88-9/16 X 80 | 5 | 5 | 5 | 4 | 3 | 4 | 5 |
| 9068 XIX | 106-9/16 X 80 | 5 | 5 | 6 | 4 | 3 | 4 | 5 |
| 12068 XIX | 142-9/16 X 80 | 7 | 7 | 8 | 4 | 3 | 4 | 5 |
| 15068 XIX | 178-9/16 X 80 | 8 | 10 | 11 | 4 | 3 | 4 | 5 |
| 7680 XIX | 88-9/16 X 96 | 5 | 5 | 5 | 5 | 4 | 6 | 6 |
| 9080 XIX | 106-9/16 X 96 | 5 | 5 | 6 | 5 | 4 | 6 | 6 |
| 12080 XIX | 142-9/16 X 96 | 7 | 8 | 9 | 5 | 4 | 6 | 6 |
| 15080 XIX | 178-9/16 X 96 | 8 | 11 | 13 | 5 | 4 | 6 | 6 |
| 10068 OXXO, XXXX | 120-5/8 X 80 | 6 | 6 | 7 | 4 | 3 | 4 | 5 |
| 12068 OXXO, XXXX | 144-5/8 X 80 | 7 | 7 | 8 | 4 | 3 | 4 | 5 |
| 16068 OXXO, XXXX | 192-5/8 X 80 | 9 | 10 | 12 | 4 | 3 | 4 | 5 |
| 10080 OXXO, XXXX | 120-5/8 X 96 | 6 | 6 | 7 | 5 | 4 | 6 | 6 |
| 12080 OXXO, XXXX | 144-5/8 X 96 | 7 | 8 | 9 | 5 | 4 | 6 | 6 |
| 16080 OXXO, XXXX | 192-5/8 X 96 | 9 | 12 | 14 | 5 | 4 | 6 | 6 |

**CENTRAL FLORIDA B.O.A.F.**

**MANUFACTURER NAME:** BETTER BILT / MI HOMES

**MASTER FILE #** 1

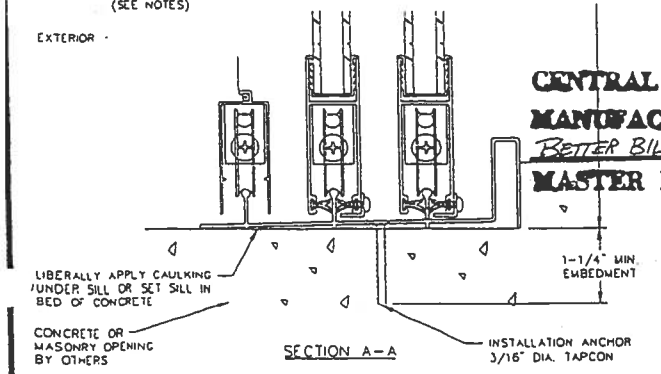


SECTION A-A

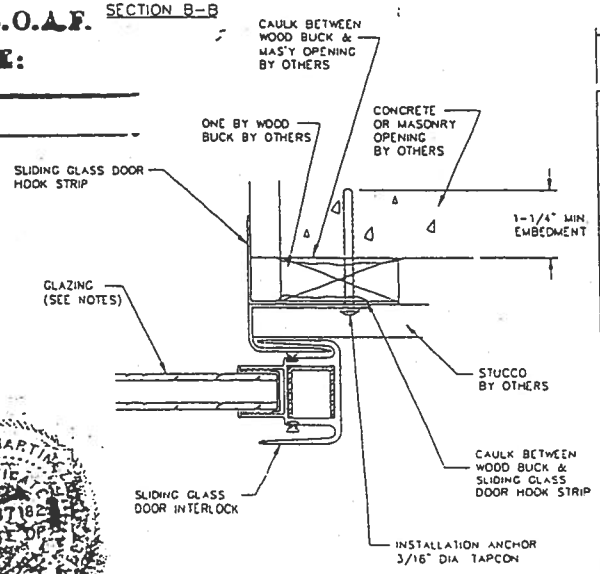


HOOK STRIP DETAIL

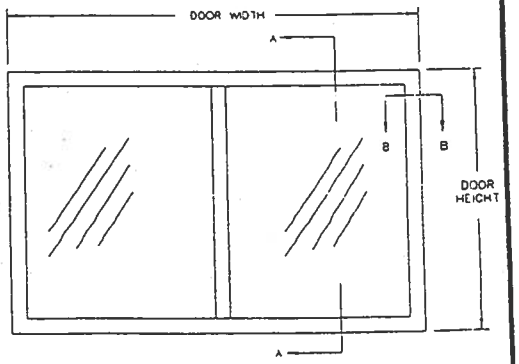


EXTERIOR ELEVATION

NOTES:

1) DOOR MATERIAL: ALUMINUM ALLOY 6063
2) TAPCON TYPE INSTALLATION ANCHORS MUST BE OF SUFFICIENT LENGTH TO ACHIEVE MIN. EMBEDMENT OF 1-1/4" INTO MASONRY OR CONCRETE.
3) ALTERNATE TAPCON INSTALLATION ANCHORS FRONT TO BACK IN ALL FRAME MEMBERS
4) USE LATEX CAULK FOR PERIMETER SEAL AROUND EXTERIOR OF DOOR
5) IF EXACT DOOR SIZE IS NOT LISTED IN ANCHOR CHART, USE ANCHOR QUANTITY LISTED WITH NEXT LARGER SIZE, FOR THE APPROPRIATE DESIGN PRESSURE REQ'D
6) FOR POCKET DOOR SIZES USE CLOSEST BYPASS DOOR SIZE & CONFIGURATION TO FINISHED OPENING.
7) INSULATED GLASS SHOWN, SINGLE GLAZING ALSO APPROVED. TEMPERED GLASS THICKNESS MAY VARY PER REQUIREMENTS OF ASTM E1300 GLASS CHARTS.
8) ALL FACTORY APPLIED HOLES NOT DESIGNED FOR TAPCON ANCHOR SHOULD BE FILLED WITH #8 SCREWS OF SUFFICIENT LENGTH TO PROVIDE MIN. 5/8" EMBEDMENT INTO WOOD BUCK
9) JAMB / SILL CORNERS ARE TO BE SEALED WITH A SMALL JOINT SEAL SEALER
10) SHIM AS REQ'D AT EA. SET OF INSTALLATION ANCHORS. MAX. ALLOWABLE SHIM STACK TO BE 1/4"
11) ALL INSTALLATION ANCHORS MUST BE MADE OF CORROSION RESISTANT MATERIALS
12) WHERE "X" REPRESENTS MOVING PANEL AND "O" REPRESENTS FIXED PANEL APPROVED CONFIGURATIONS ARE AS LISTED ON INSTALLATION CHART.
13) NOT ALL CONFIGURATIONS LISTED ABOVE ARE SHOWN ON THIS DRAWING, HOWEVER INSTALLATION SECTIONS "A-A", "B-B" & HOOK STRIP DETAIL APPLY TO INSTALLATION OF ALL APPROVED CONFIGURATIONS
14) MAX ALLOWABLE SPACING BETWEEN TAPCON ANCHORS TO BE 24" O.C.
15) SERIES 420 SLIDING GLASS DOOR IS SHOWN. THIS PRINT ALSO APPLIES TO 430 & 440 SERIES
16) WHERE DOOR IS INSTALLED IN WOOD FRAME STRUCTURE, USE #10 SCREWS OF SUFFICIENT LENGTH TO ACHIEVE 1-3/8" MIN. EMBEDMENT INTO SUBSTRATE. PLACE #10 SCREWS 6" FROM CORNERS & 24" O.C. MAX

MANUEL MARTINEZ CERTIFICATE OF AUTHORIZATION 47182 STATE OF FLORIDA REGISTERED

## MI HOME PRODUCTS
## GRATZ, PA.

TITLE: SERIES 420/430/440 SLIDING GLASS DOOR INSTALLATION WITH TAPCONS

| | | | |
|---|---|---|---|
| ENGINEER: MANUAL MARTINEZ | DRW: BB | DATE: 12/13/01 | |
| DISCIPLINE: CIVIL | SCALE: N.T.S. | DWG. NO: MIHP0013 | |
| FL REG. NO: 47182 | REV. LETTER: | SHEET: 1 OF 1 | |

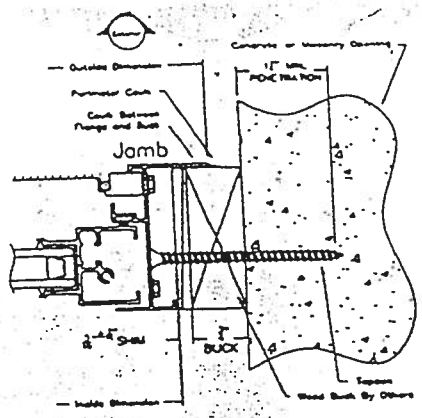


| TAPCON * LOCATION CHART | | | |
|---|---|---|---|
| CODE SIZE | WINDOW ID SIZE | FASTENER LOCATIONS | |
| | | UP TO DP35 | DP35.1 TO DP50 |
| 6'-0" x 4'-0" XOX | 71 1/2 x 47 | A,C,E | A,C,D,E |
| 6'-0" x 5'-0" XOX | 71 1/2 x 59 | A,C,D | A,B,C,D,E |
| 6'-0" x 5'-4" XOX | 71 3/8 x 63 | A,C,D,E | A,B,C,D,E |
| 7'-0" x 4'-0" XOX | 83 1/2 x 47 | A,C,D,E | A,C,D,E,F |
| 7'-0" x 5'-0" XOX | 83 1/2 x 59 | A,C,D,E | A,B,C,D,E,F |
| 7'-0" x 5'-4" XOX | 83 1/2 x 63 | A,C,D,E,F | A,B,C,D,E,G,H |
| 8'-0" x 4'-0" XOX | 95 1/2 x 47 | A,C,D,F | A,C,D,E,G,H |
| 8'-0" x 5'-0" XOX | 95 1/2 x 59 | A,C,D,E,F | A,B,C,D,E,G,H |
| 8'-0" x 5'-4" XOX | 95 1/2 x 63 | A,C,D,E,G,H | A,B,C,D,E,F,G,H |
| 9'-0" x 4'-0" XOX | 107 1/2 x 47 | A,C,D,F | A,B,C,D,E,F |
| 9'-0" x 5'-0" XOX | 107 1/2 x 59 | A,C,D,E,G,H | A,B,C,D,F,G,H,J |
| 9'-0" x 5'-4" XOX | 107 1/2 x 63 | A,B,C,D,E,F | A,B,C,D,G,H,J,J |
| 10'-0" x 4'-0" XOX | 119 1/2 x 47 | A,C,D,E,F | A,B,C,D,E,G,H |
| 10'-0" x 5'-0" XOX | 119 1/2 x 59 | A,B,C,D,E,F | A,B,C,D,G,H,J,J |
| 10'-0" x 5'-4" XOX | 119 1/2 x 63 | A,B,C,D,E,G,H | A,B,C,D,E,G,H,J,J |

| TAPCON * LOCATION CHART | | | |
|---|---|---|---|
| CODE SIZE | WINDOW ID SIZE | FASTENER LOCATIONS | |
| | | UP TO DP35 | DP35.1 TO DP50 |
| 2'-0" x 2'-0" | 23 3/8 x 23 | C,D | C,D |
| 2'-0" x 3'-0" | 23 3/8 x 35 | C,D | C,D |
| 3'-0" x 2'-0" | 35 3/8 x 23 | C,D | C,D |
| 3'-0" x 3'-0" | 35 3/8 x 35 | C,D | C,D |
| 3'-0" x 4'-0" | 35 3/8 x 47 | C,D | C,D |
| 3'-0" x 5'-0" | 35 3/8 x 59 | C,D | A,C,E |
| 4'-0" x 2'-0" | 47 3/8 x 23 | C,D | C,D |
| 4'-0" x 3'-0" | 47 3/8 x 35 | C,D | C,D |
| 4'-0" x 4'-0" | 47 3/8 x 47 | C,D | A,C,E |
| 4'-0" x 5'-0" | 47 3/8 x 59 | C,D | B,C,D |
| 4'-0" x 6'-0" | 47 3/8 x 71 | B,C,D | A,B,C,E |
| 5'-0" x 2'-0" | 59 3/8 x 23 | C,D | C,D |
| 5'-0" x 3'-0" | 59 3/8 x 35 | C,D | A,C,E |
| 5'-0" x 4'-0" | 59 3/8 x 47 | C,D | B,C,D |
| 5'-0" x 5'-0" | 59 3/8 x 59 | B,C,D | A,B,C,E |
| 5'-0" x 6'-0" | 59 3/8 x 71 | B,C,D | A,B,C,D,E |
| 6'-0" x 2'-0" | 71 3/8 x 23 | C,D | C,D |
| 6'-0" x 3'-0" | 71 3/8 x 35 | C,D | A,C,E |
| 6'-0" x 4'-0" | 71 3/8 x 47 | A,C,E | B,C,D,E |
| 6'-0" x 5'-0" | 71 3/8 x 59 | B,C,D | A,B,C,D,E |
| 6'-0" x 6'-0" | 71 3/8 x 71 | B,C,D,E | A,B,C,D,E,F |

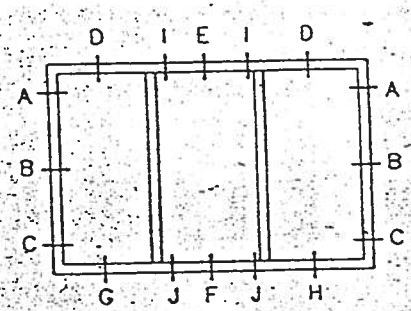


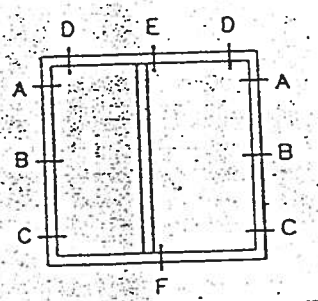


1. Shim as required at each installation anchor as shown.
2. Anchor must be of a length to have 1 1/4" penetration into masonry or concrete and must be installed in accordance with manufacturer's instructions.
3. Caulk (Silicone or Urethane) between window flange and buck.
4. Caulk full perimeter of window.
5. If exact window size is not given, use anchor quantity for next larger window in chart.
6. Glass thickness will vary with window size and design load.
7. Letter designations on the tapcon location chart indicate where anchors are to be installed using the elevation as a key. On the two-tile slider, when using location "D" without location "E" place anchors at center of tile.
8. Substrate must be hollow CMU or concrete.
9. Drawings are for installation purposes only.

*"TAPCON" TYPE HARDENED MASONRY SCREWS INCLUDE TAPCON, RAWL, & SIMPSON

CENTRAL FLORIDA B.O.A.F.

MANUFACTURER NAME: Better Built

MASTER FILE # 19

It 2.21

MAY 22 2003

Steven M. Ulich
130 Derry Ct
York, PA 17402
FL PE #57795

STEVEN M. ULICH LICENSED No 57795 STATE OF FLORIDA PROFESSIONAL ENGINEER

DWG BY: DAS
DATE: 5/19/03

DRAWING: Masonry Installation of 480/680 Flange Slider

Installation Drawings
MI Home Products Inc.

PROJECT NO. 01-45405.01
01-122-34

CLIENT: MI

PROJECT MGR:

# Eyebrow Installation

HOME PRODUCTS

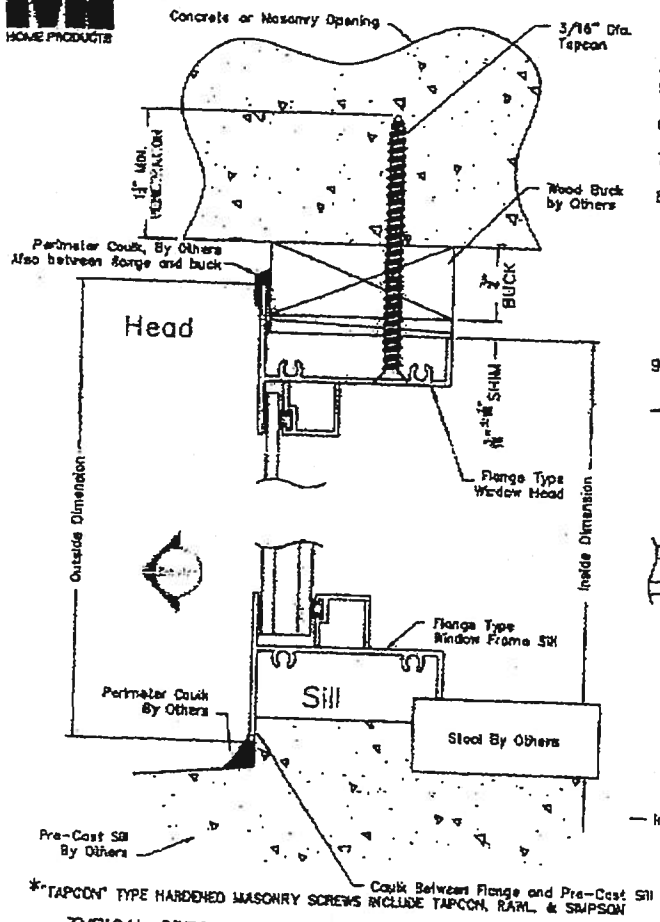


*"TAPCON" TYPE HARDENED MASONRY SCREWS INCLUDE TAPCON, RAWL, & SIMPSON

TYPICAL SPECIALTY SHAPES COVERED BY RECTANGULAR UNITS

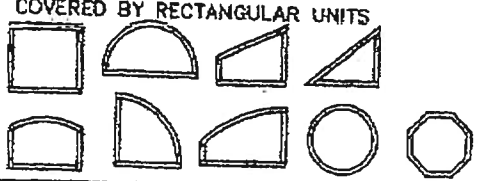

1. Shim as required with load bearing shims at each installation anchor as shown.
2. Anchor must be of a length to have 1 1/4" penetration into masonry or concrete.
3. Caulk between window flange and buck.
4. Caulk full perimeter of window.
5. If exact window size is not given, use anchor quantity for next larger window in chart.
6. Glass thickness will vary per the requirements of ASTM E1300 glass charts.
7. Fixed units do not have pre-punched mounting holes and must be field drilled as required. See chart at right.
8. Locate concrete installation anchors as follows:
   Where anchor quantity chart indicates 1 concrete installation anchor req'd in head or jambs, locate anchor at mid point of framing member.
   Where anchor quantity chart indicates 2 concrete installation anchor req'd in head or jambs, locate anchor within 6" of each corner of framing member.
   Where anchor quantity chart indicates 3 or more concrete installation anchors req'd in head or jambs, locate anchors 6" of each corner of framing member & equally space.
9. Max. spacing between tapcons is 24" O.C. max.

Ⓐ

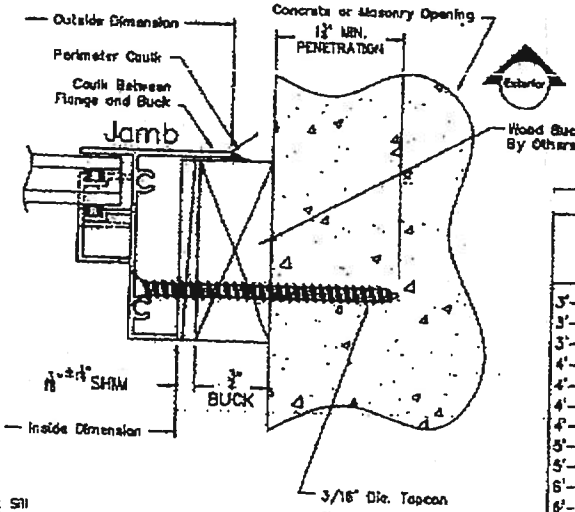


| SYM | REVISION | DATE | BY |
|---|---|---|---|
| A | CHANGED ANCHOR QUANTITY | 9/24/03 | BB |

*TAPCON QUANTITY CHART

| CODE SIZE | WINDOW ID SIZE | SCREWS IN HEAD/SILL: UP TO DP35 | SCREWS IN HEAD/SILL: DP35.1 TO DP50 | SCREWS IN EACH JAMB: UP TO DP35 | SCREWS IN EACH JAMB: DP35.1 TO DP50 |
|---|---|---|---|---|---|
| 12 | 18 1/8 x 25 | 2 | 2 | 2 | 2 |
| 13 | 18 1/8 x 37 3/8 | 2 | 2 | 3 | 3 |
| 14 | 18 1/8 x 49 5/8 | 3 | 2 | 3 | 3 |
| 15 | 18 1/8 x 62 | 2 | 2 | 4 | 4 |
| 16 | 18 1/8 x 71 1/4 | 2 | 2 | 4 | 4 |
| 1/2 32 | 25 1/2 x 25 | 2 | 2 | 2 | 2 |
| 1/2 33 | 25 1/2 x 37 3/8 | 2 | 2 | 3 | 3 |
| 1/2 34 | 25 1/2 x 49 5/8 | 2 | 2 | 3 | 3 |
| 1/2 35 | 25 1/2 x 62 | 2 | 2 | 4 | 4 |
| 1/2 36 | 25 1/2 x 71 1/4 | 2 | 2 | 4 | 4 |
| 22 | 38 x 25 | 2 | 2 | 2 | 2 |
| 23 | 36 x 37 3/8 | 2 | 2 | 3 | 3 |
| 24 | 36 x 49 5/8 | 2 | 2 | 3 | 3 |
| 245 | 36 x 55 1/4 | 2 | 2 | 3 | 3 |
| 25 | 36 x 62 | 2 | 2 | 4 | 4 |
| 26 | 38 x 71 1/4 | 2 | 2 | 4 | 4 |
| 32 | 52 1/8 x 25 | 3 | 3 | 2 | 2 |
| 33 | 52 1/8 x 37 3/8 | 3 | 3 | 3 | 3 |
| 34 | 52 1/8 x 49 5/8 | 3 | 3 | 3 | 3 |
| 345 | 52 1/8 x 55 1/4 | 3 | 3 | 3 | 3 |
| 35 | 52 1/8 x 62 | 3 | 3 | 4 | 4 |
| 36 | 52 1/8 x 71 1/4 | 3 | 3 | 4 | 4 |

TAPCON* LOCATION & QUANTITY CHART

| CODE SIZE | WINDOW ID SIZE | SCREWS IN HEAD/SILL: UP TO DP35 | SCREWS IN HEAD/SILL: DP35.1 TO DP50 | SCREWS IN EACH JAMB: UP TO DP35 | SCREWS IN EACH JAMB: DP35.1 TO DP50 |
|---|---|---|---|---|---|
| 3'-0" x 3'-0" | 35 1/4 x 35 1/4 | 2 | 2 | 3 | 3 |
| 3'-0" x 4'-0" | 35 1/4 x 47 1/4 | 2 | 2 | 3 | 3 |
| 3'-0" x 5'-0" | 35 1/4 x 59 1/4 | 2 | 2 | 4 | 4 |
| 4'-0" x 3'-0" | 47 1/4 x 35 1/4 | 3 | 3 | 3 | 3 |
| 4'-0" x 4'-0" | 47 1/4 x 47 1/4 | 3 | 3 | 3 | 3 |
| 4'-0" x 5'-0" | 47 1/4 x 59 1/4 | 3 | 3 | 4 | 4 |
| 4'-0" x 8'-0" | 47 1/4 x 95 1/4 | 3 | 3 | 5 | 5 |
| 5'-0" x 3'-0" | 59 1/4 x 35 1/4 | 3 | 3 | 3 | 3 |
| 5'-0" x 5'-0" | 59 1/4 x 59 1/4 | 3 | 3 | 4 | 4 |
| 6'-0" x 3'-0" | 71 1/4 x 35 1/4 | 4 | 4 | 3 | 3 |
| 6'-0" x 5'-0" | 71 1/4 x 59 1/4 | 4 | 4 | 4 | 4 |
| twin 2 x 5'-0" | 73 1/8 x 59 1/4 | 4 | 4 | 4 | 4 |
| 8'-0" x 3'-0" | 95 1/4 x 35 1/4 | 5 | 5 | 3 | 3 |
| 8'-0" x 4'-0" | 95 1/4 x 47 1/4 | 5 | 5 | 3 | 3 |

TITLE: INSTALLATION INSTRUCTIONS & FASTENER SCHEDULE

PRODUCT: 165-740-744 Flange Fixed Units

DRAWN BY: T.C. DATE: 02/12/02
CHECKED: DATE:
SCALE: NONE SHEET: 1 OF 1
DWG. NO.: 165-740-744 Flange Fixed Units Installation REV.: —

# Standard Single hung window installation

1. Shim as required at each installation anchor as shown.
2. Anchor must be of a length to have 1 1/4" penetration into masonry or concrete.
3. Caulk between window flange and buck.
4. Caulk full perimeter of window.
5. If exact window size is not given, use anchor quantity for next larger window in chart.
6. Glass thickness will vary with window size and design load.
7. Letter designations on the tapcon location chart indicate where anchors are to be installed using the elevation as a key.
8. All factory applied holes not designated for tapcon anchor should be filled with #8 screws of sufficient length to provide min. 5/8" embedment into wood buck.

BetterBilt

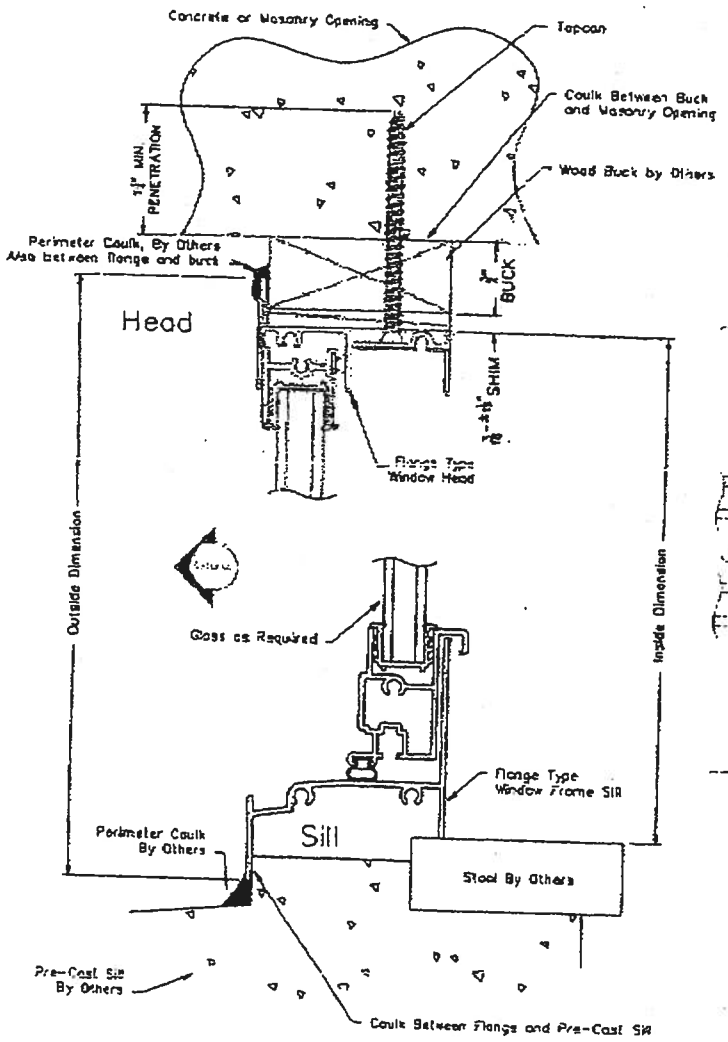


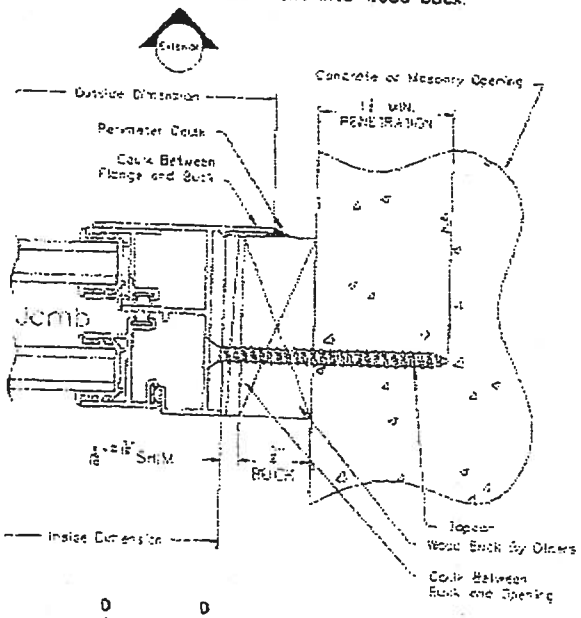


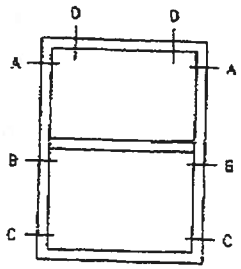


| TAPCON * LOCATION CHART | | | |
|---|---|---|---|
| CODE SIZE | WINDOW ID SIZE | FASTENER LOCATIONS | |
| | | UO TO DP35 | DP35.1 TO DP50 |
| 12 | 18 1/8 x 25 | C, D | C, D |
| 13 | 18 1/8 x 37 3/8 | C, D | C, D |
| 14 | 18 1/8 x 49 5/8 | C, D | C, D |
| 15 | 18 1/8 x 62 | C, D | C, D |
| 16 | 18 1/8 x 71 1/4 | C, D | C, D |
| 1/2 32 | 25 1/2 x 25 | C, D | C, D |
| 1/2 33 | 25 1/2 x 37 3/8 | C, D | C, D |
| 1/2 34 | 25 1/2 x 49 5/8 | C, D | C, D |
| 1/2 35 | 25 1/2 x 62 | C, D | C, D |
| 1/2 36 | 25 1/2 x 71 1/4 | C, D | B, C, D |
| 22 | 36 x 25 | C, D | C, D |
| 23 | 36 x 37 3/8 | C, D | C, D |
| 24 | 36 x 49 5/8 | C, D | C, D |
| 245 | 36 x 55 1/4 | C, D | B, C, D |
| 25 | 36 x 62 | C, D | B, C, D |
| 26 | 36 x 71 1/4 | B, C, D | B, C, D |
| 32 | 52 1/8 x 25 | C, D | C, D |
| 33 | 52 1/8 x 37 3/8 | C, D | C, D |
| 34 | 52 1/8 x 49 5/8 | C, D | B, C, D |
| 345 | 52 1/8 x 55 1/4 | B, C, D | B, C, D |
| 35 | 52 1/8 x 62 | B, C, D | B, C, D |
| 36 | 52 1/8 x 71 1/4 | B, C, D | A, B, C, D |
| 2050 | 24 1/4 x 60 1/4 | C, D | C, D |
| 3040 | 36 1/4 x 48 1/4 | C, D | C, D |
| 3050 | 36 1/4 x 60 1/4 | C, D | B, C, D |
| 3060 | 48 1/4 x 60 1/4 | B, C, D | B, C, D |
| 4050 | 52 1/8 x 71 1/4 | B, C, D | B, C, D |

* "TAPCON" TYPE HARDENED MASONRY SCREWS INCLUDE TAPCON, RAWL, & SIMPSON

| | | |
|---|---|---|
| TITLE: INSTALLATION INSTRUCTIONS & FASTENER SCHEDULE | DRAWN BY S.W. | DATE 1/15/02 |
| PRODUCT: 740/744 SINGLE HUNG | CHECKED | DATE |
| | SCALE NONE | SHEET 1 of 1 |
| | DWG. NO. INST740 | REV. - |

Feb-06-04 07:57A

3" ALUMINUM

Manufactured by: U.S. Block Windows Inc
Series: FL30-8
Class: Fixed - Heavy Commercial
Report #: CTLA 480W / 480W-1

| Fastener: | #10 x 1.5 PH SMS | | | | |
|---|---|---|---|---|---|
| Spacing in inches from corner: | | | 3" | C to C: | 6" |
| Unit size (inches) | DP (PSF) | Total Fasteners | Each Jamb | Head | Sill |
| 82X82 | 55 | 56 | 14 | 14 | 14 |
| 74x74 | 55 | 52 | 13 | 13 | 13 |
| 66x66 | 55 | 48 | 12 | 12 | 12 |
| 58x58 | 100 | 40 | 10 | 10 | 10 |
| 50x50 | 100 | 36 | 9 | 9 | 9 |
| 42x42 | 100 | 28 | 7 | 7 | 7 |
| 34x34 | 100 | 24 | 6 | 6 | 6 |
| 26x26 | 100 | 20 | 5 | 5 | 5 |
| 18x18 | 100 | 16 | 4 | 4 | 4 |
| 10x10 | 100 | 12 | 3 | 3 | 3 |

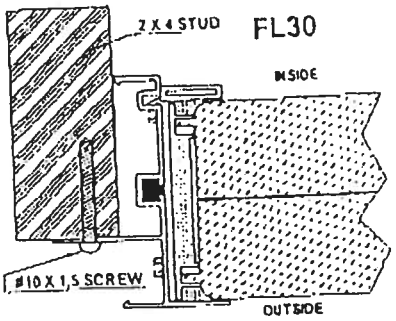


**The above matrix is deemed acceptable using a mathematical comparison based on Certified Test Laboratories report numbers CTLA 480W and CTLA 480W-1**

INSTALLATION INSTRUCTIONS

**Step 1:** Check to make sure that the opening is no more than 1/2" larger than the window horizontally or vertically.

**Step 2:** Apply a generous bead of silicone sealant to the back of the nailing fin.

**Step 3:** From outside the house, slide the unit into the opening and center it by using shims at the bottom corners.

**Step 4:** Check the unit for plumb and level and adjust shims accordingly then apply shims to the top corners so the unit does not move during fastening.

**Step 5:** Install a #10 x 1.5" screw in the top and bottom of the jambs approximately 3" from each corner. Repeat this procedure in the head and sill.

**Step 6:** For maximum structural performance, install screws every 6" starting from the corners and working toward the center of the jambs, head and sill.

W.S. Wilson P.E.

Date: 5-6-02

Florida P.E. Number 0048489

www.usblockwindows.com

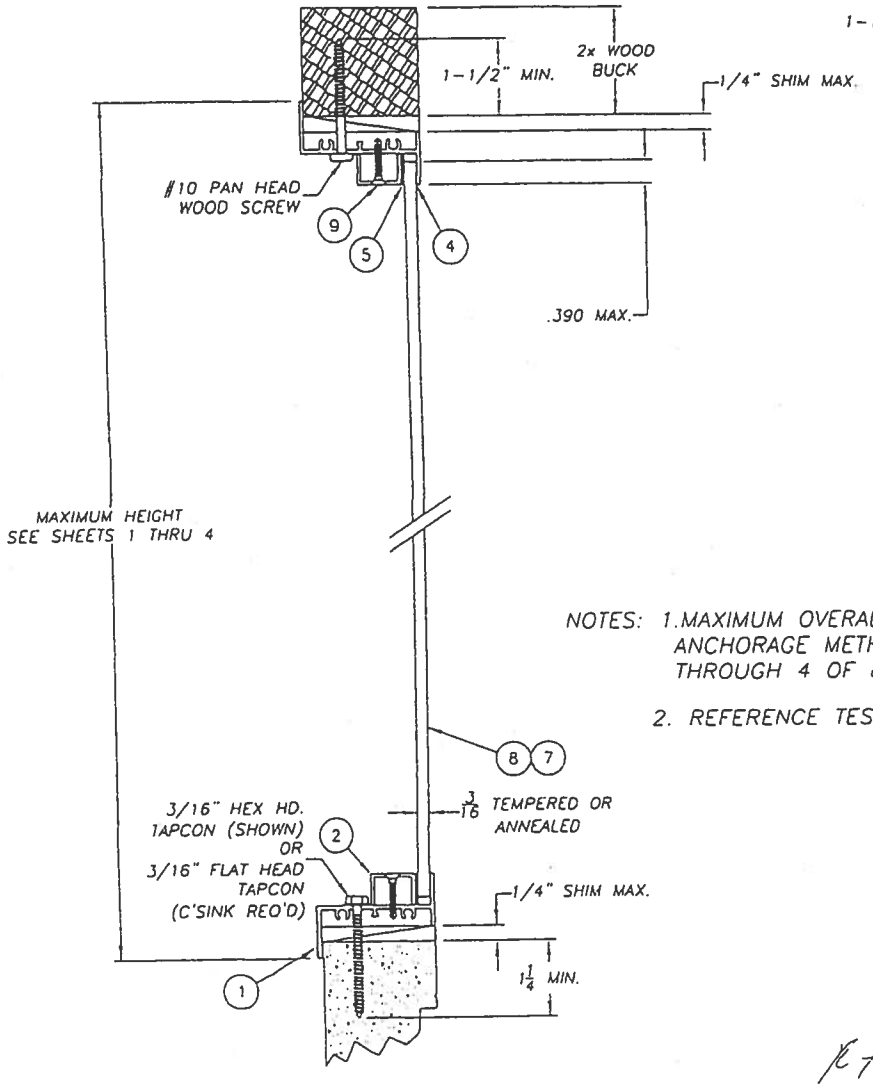


SECTION A-A
TYPICAL SECTION
& INSTALLATION INTO CONCRETE AT SILL & WOOD AT HEAD

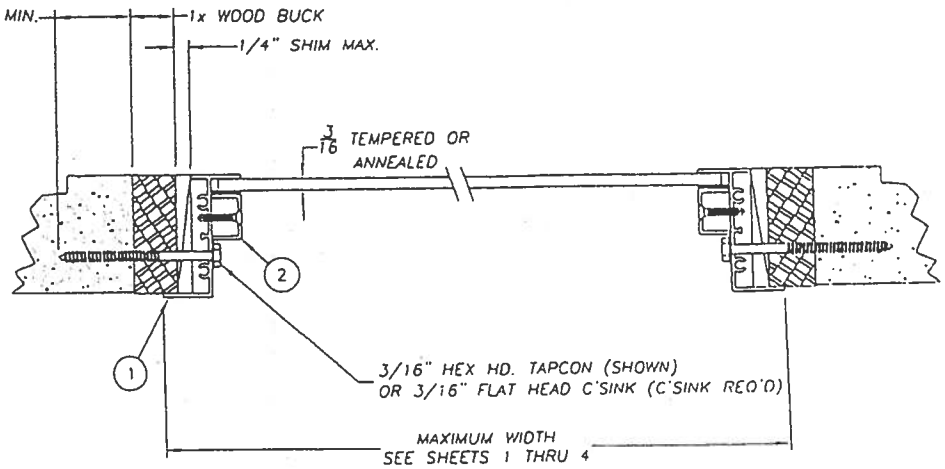


SECTION B-B
TYPICAL SECTION
& ALTERNATE INSTALLATION INTO CONCRETE

NOTES: 1. MAXIMUM OVERALL DIMENSIONS ARE APPLICABLE TO SECTIONED ARCH. SHAPES ANCHORAGE METHODS ARE APPLICABLE TO ALL SHAPES SHOWN ON SHEETS 1 THROUGH 4 OF 8.

2. REFERENCE TEST REPORTS: FTL-2818, FTL-2819, FTL-2820, FTL-2748, FTL-2756 & FTL-2758

PRODUCT REVISED
as complying with the Florida Building Code
Acceptance No. 02-0701.08
Expiration Date 09/13/06
By Claudia Gomez
Miami Dade Product Control Division

APPROVED AS COMPLYING WITH THE SOUTH FLORIDA BUILDING CODE
DATE SEP 13 2001
BY Manuel Diaz
PRODUCT CONTROL DIVISION
BUILDING CODE COMPLIANCE OFFICE
ACCEPTANCE NO. 01-0107.02

8/20/01
Robert L. Clark, P.E.
PE #39712
Structural

PGT INDUSTRIES

| | | | |
|---|---|---|---|
| | Revsd By: F.K. | Date: 8/15/01 | Revisions: REDRAWN |
| Drawn By: J.J. | Date: 10/24/00 | | |
| Description: SECTIONAL & ANCHORAGE VIEWS | | | |
| Title: ALUMINUM FIXED WINDOW | | | |

| 1070 TECHNOLOGY DRIVE NOKOMIS, FL 34275 | P.O. BOX 1529 NOKOMIS, FL 34274 | Series/Model: F-6000 | Scale: NTS | Sheet: 5 of 9 | Drawing No: 550 | Rev: B |
|---|---|---|---|---|---|---|

# Series H83 'STRUCTURAL' HORIZONTAL MULLION - Florida Flange

NOTES: If you are stacking a single unit over another single unit, such as a roundhead over a single hung, the Series V83 Mull Kit (which is the vertical mull normally used to twin units) is sufficient and can be used horizontally. Specify length when ordering.

Overall length of horizontal mull is to be the same length as the overall flange to flange width of the mulled units below, including the vertical mull. EXAMPLE: For twin "Two Wide", Mull will be 37" + 1/8" + 37" = 74 1/8"

**Step 1.** On lower units, follow twinning instructions shown on sheet # MULLV83A.

**Step 2.** Position horizontal mull on top of twinned units as shown below. With 1/8" drill, drill up through pre-punched holes in the single hung heads into the mull. Before attaching with #8 x 3/4" screws (not included), run a full length bead of caulk in area shown.

**Step 3.** Position top unit on top of mull and drill 1/8" holes, in position shown, on same centers as lower unit. With 3/16" drill, re-drill holes in sill only and fasten with screws.

**Step 4.** For fastening the vertical mull to the horizontal mull, "face screws" can be added to the 1/2" tab on the vertical mull. Use 1/8" drill bit as described above. For best appearance, countersink the holes and use flathead screws.

**Step 5.** Before lifting into rough opening, Drill two holes in each clip and insert into each end of mull as shown below with tabs pointing to up and down. Fasten each clip tab to construction with two #10 x 1 1/2" screws for structural integrity.

**740/744/3740**

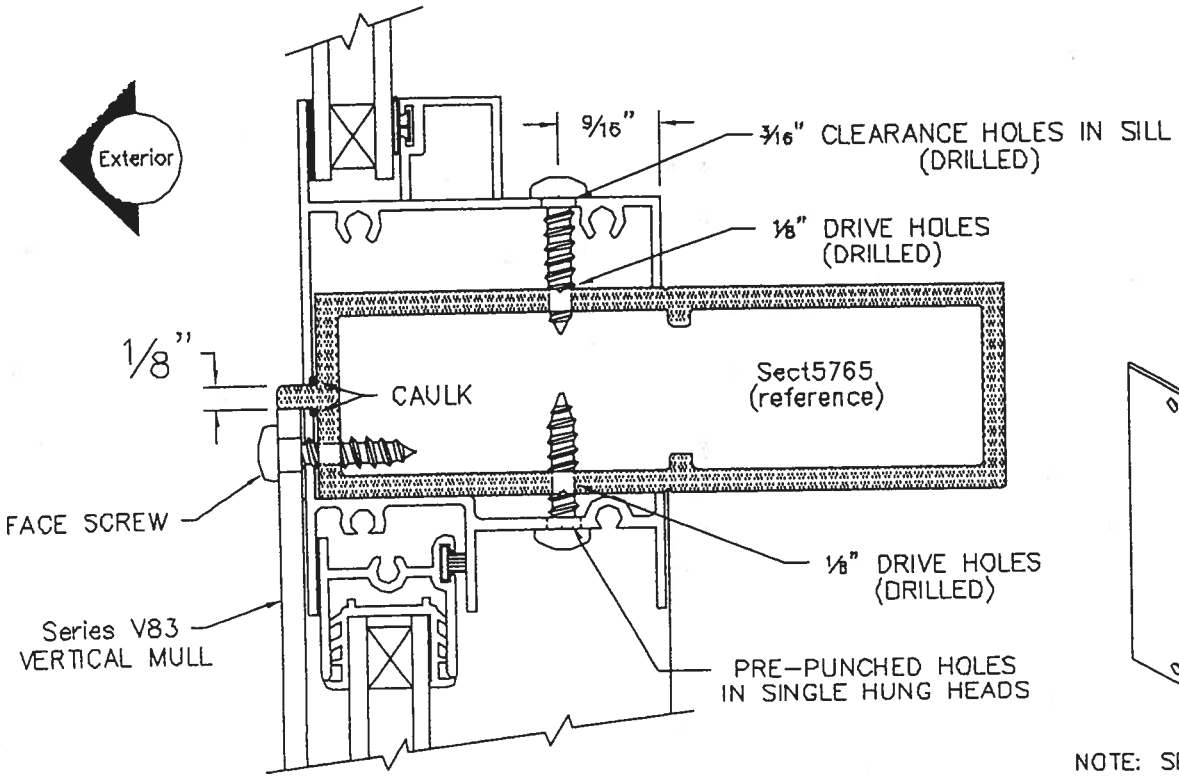


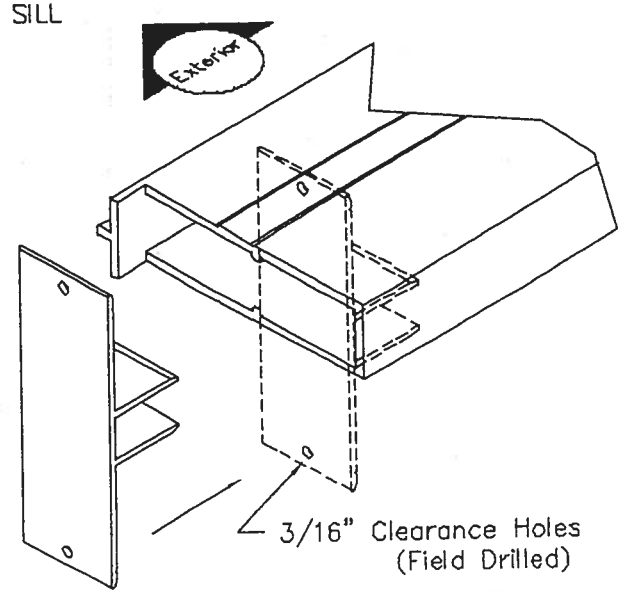


NOTE: SEE REVERSE SIDE FOR FASTENING REQUIREMENTS.

MULLH83A

# PRODUCT APPROVAL SPECIFICATION SHEET

As required by Florida Statute 553.842 and Florida Administrative Code 9B-72, please provide the information and approval numbers on the building components listed below if they will be utilized on the construction project for which you are applying for a building permit. We recommend you contact your local product supplier should you not know the product approval number for any of the applicable listed products. Statewide approved products are listed online @ www.floridabuilding.org

| Category/Subcategory | Manufacturer | Product Description | Approval Number(s |
|---|---|---|---|
| 1. EXTERIOR DOORS | | | |
| A. SWINGING | Therma Tru | Construction Series | 1170.2 |
| B. SLIDING | Better Bilt | 420 | 5493.2 |
| C. SECTIONAL/ROLL UP | Windsor Door Co. | Model 724, 726, 730 16' door | FL1416-R |
| D. OTHER | N/A | | |
| 2. WINDOWS | | | |
| A. SINGLE/DOUBLE HUNG | Better Bilt | 740 Flange Frame 52x74 R-45 | 5438.27 |
| B. HORIZONTAL SLIDER | | | |
| C. CASEMENT | N/A | | |
| D. FIXED | Better Bilt | 740 Flange Frame 71x71 R-35 | 5418.13 |
| E. MULLION | Better Bilt | Flange Tube Mullion | 5513.2/5513. |
| F. SKYLIGHTS | N/A | | |
| G. OTHER | N/A | | |
| 3. PANEL WALL | | | |
| A. SIDING | N/A | | |
| B. SOFFITS | Alcoa Home Products | Aluminum Soffit | FL5543/55 |
| C. STOREFRONTS | N/A | | |
| D. GLASS BLOCK | US Block Window | Aluminum Frame w/3x8 Blocks | FL 185.3 |
| E. OTHER | N/A | | |
| 4. ROOFING PRODUCTS | | | |
| A. ASPHALT SHINGLES | Owens Corning | Owens Corning | 3663.2 |
| B. NON-STRUCT METAL | N/A | | |
| C. ROOFING TILES | N/A | | |
| D. SINGLE PLY ROOF | N/A | | |
| E. OTHER | N/A | | |
| 5. STRUCT COMPONENTS | | | |
| A. WOOD CONNECTORS | N/A | | |
| B. WOOD ANCHORS | N/A | | |
| C. TRUSS PLATES | Simpson Strong Tie | HT 116 | FL503.20 |
| D. INSULATION FORMS | N/A | | |
| E. LINTELS | Marion Masonary | Precast + Prestressed Lintel | 5096.1 |
| F. OTHERS | N/A | | |
| 6. NEW EXTERIOR ENVELOPE PRODUCTS | | | |
| A. | N/A | | |

The products listed below did not demonstrate product approval at plan review. I understand that at the time of inspection of these products, the following information must be available to the inspector on the jobsite; 1) copy of the product approval, 2) performanc characteristics which the product was tested and certified to comply with, 3) copy of the applicable manufacturers installation requirements. Further, I understand these products may have to be removed if approval cannot be demonstrated during inspection

Sue McCall
APPLICANT SIGNATURE

2/24/06
DATE

# Short Form
## *Entire House*
## SUNKOOL A/C

Job: Susan & George Bohlm...
Date: 6/1/06
By: Greg West

1806 NE 2ND AVE, OCALA, FL 34479 Phone: 352-622-1067 Email: sunkoolac@aol.com Web: www.sunkoolac.com

## Project Information

For: HOMES BY WHITTAKER

## Design Information

| | Htg | Clg |
|---|---|---|
| Outside db (°F) | 34 | 93 |
| Inside db (°F) | 70 | 75 |
| Design TD (°F) | 36 | 18 |
| Daily range | - | M |
| Inside humidity (%) | - | 50 |
| Moisture difference (gr/lb) | - | 50 |

**Infiltration**

| | |
|---|---|
| Method | Simplified |
| Construction quality | Average |
| Fireplaces | 0 |

### HEATING EQUIPMENT

| | |
|---|---|
| Make | CARRIER |
| Trade | HEAT PUMP |
| Model | 5.0 Ton |

| | | |
|---|---|---|
| Efficiency | 8.5 HSPF | |
| Heating input | | |
| Heating output | 0 | Btuh @ 47°F |
| Temperature rise | 0 | °F |
| Actual air flow | 1800 | cfm |
| Air flow factor | 0.042 | cfm/Btuh |
| Static pressure | 0.55 | in H2O |
| Space thermostat | | |

### COOLING EQUIPMENT

| | |
|---|---|
| Make | CARRIER |
| Trade | HEAT PUMP |
| Cond | 5.0 Ton |
| Coil | |

| | | |
|---|---|---|
| Efficiency | 13 EER | |
| Sensible cooling | 51000 | Btuh |
| Latent cooling | 9000 | Btuh |
| Total cooling | 60000 | Btuh |
| Actual air flow | 1800 | cfm |
| Air flow factor | 0.040 | cfm/Btuh |
| Static pressure | 0.55 | in H2O |
| Load sensible heat ratio | 0.87 | |

| ROOM NAME | Area (ft²) | Htg load (Btuh) | Clg load (Btuh) | Htg AVF (cfm) | Clg AVF (cfm) |
|---|---|---|---|---|---|
| BDRM 1 | 289 | 5975 | 6490 | 250 | 258 |
| MASTER WIC 1 | 84 | 105 | 128 | 4 | 5 |
| MWIC2 | 13 | 16 | 19 | 1 | 1 |
| MAster Toilet | 11 | 13 | 16 | 1 | 1 |
| MASTER BATH | 165 | 2417 | 2103 | 101 | 84 |
| LAUNDRY ROOM | 56 | 353 | 163 | 15 | 6 |
| DINING ROOM | 182 | 3523 | 2733 | 147 | 109 |
| KITCHEN | 159 | 2333 | 3519 | 98 | 140 |
| NOOK | 159 | 3414 | 3372 | 143 | 134 |
| FAMILY ROOM | 420 | 7691 | 10154 | 322 | 404 |
| FOYER | 91 | 2469 | 2754 | 103 | 110 |
| LIVING ROOM/ DEN | 163 | 3499 | 3034 | 146 | 121 |
| BATH 2 | 54 | 912 | 450 | 38 | 18 |
| BDRM 3 | 150 | 3361 | 3195 | 141 | 127 |
| BDRM 2 | 200 | 3417 | 3718 | 143 | 148 |
| BATH 3 | 45 | 56 | 69 | 2 | 3 |
| BDRM 4 | 196 | 3456 | 3274 | 145 | 130 |

Printout certified by ACCA to meet all requirements of Manual J 7th Ed.

| | | | | | | |
|---|---|---|---|---|---|---|
| Bed3 WIC | | 9 | 11 | 14 | 0 | 1 |
| bed2 WIC | | 9 | 11 | 14 | 0 | 1 |
| Entire House | d | 2453 | 43032 | 45216 | 1800 | 1800 |
| Other equip loads | | | 0 | 0 | | |
| Equip. @ 0.98 RSM | | | | 44311 | | |
| Latent cooling | | | | 6557 | | |
| TOTALS | | 2453 | 43032 | 50869 | 1800 | 1800 |

Printout certified by ACCA to meet all requirements of Manual J 7th Ed.

# Duct System Summary
## *Entire House*
### SUNKOOL A/C

Job: Susan & George Bohlm...
Date: 6/1/06
By: Greg West

1806 NE 2ND AVE, OCALA, FL 34479 Phone: 352-622-1067 Email: sunkoolac@aol.com Web: www.sunkoolac.com

## Project Information

For: HOMES BY WHITTAKER

| | Heating | Cooling |
|---|---|---|
| External static pressure | 0.55 in H2O | 0.55 in H2O |
| Pressure losses | 0.32 in H2O | 0.32 in H2O |
| Available static pressure | 0.23 in H2O | 0.23 in H2O |
| Supply / return available pressure | 0.22 / 0.01 in H2O | 0.22 / 0.01 in H2O |
| Lowest friction rate | 0.900 in/100ft | 0.900 in/100ft |
| Actual air flow | 1800 cfm | 1800 cfm |
| Total effective length (TEL) | 210 ft | |

## Supply Branch Detail Table

| Name | | Design (Btuh) | Htg (cfm) | Clg (cfm) | Design FR | Diam (in) | Rect Size (in) | Duct Matl | Actual Ln (ft) | Ftg.Eqv Ln (ft) | Trunk |
|---|---|---|---|---|---|---|---|---|---|---|---|
| BDRM 1 | c | 6490 | 250 | 258 | 0.900 | 9 | 0x0 | VIFx | 200.0 | 0.0 | st4 |
| MASTER WIC 1 | c | 128 | 4 | 5 | 0.900 | 4 | 0x0 | VIFx | 0.0 | 0.0 | st4 |
| MWIC2 | c | 19 | 1 | 1 | 0.900 | 4 | 0x0 | VIFx | 0.0 | 0.0 | st4 |
| MAster Toilet | c | 16 | 1 | 1 | 0.900 | 4 | 0x0 | VIFx | 0.0 | 0.0 | st4 |
| MASTER BATH | h | 2417 | 101 | 84 | 0.900 | 6 | 0x0 | VIFx | 0.0 | 0.0 | st4 |
| LAUNDRY ROOM | h | 353 | 15 | 6 | 0.900 | 4 | 0x0 | VIFx | 0.0 | 0.0 | P |
| DINING ROOM | h | 3523 | 147 | 109 | 0.900 | 7 | 0x0 | VIFx | 0.0 | 0.0 | st1 |
| KITCHEN | c | 3519 | 98 | 140 | 0.900 | 7 | 0x0 | VIFx | 0.0 | 0.0 | st1 |
| NOOK | h | 3414 | 143 | 134 | 0.900 | 7 | 0x0 | VIFx | 0.0 | 0.0 | ST1 |
| FAMILY ROOM-A | c | 5077 | 161 | 202 | 0.900 | 8 | 0x0 | VIFx | 0.0 | 0.0 | ST2 |
| FAMILY ROOM | c | 5077 | 161 | 202 | 0.900 | 8 | 0x0 | VIFx | 0.0 | 0.0 | st2 |
| FOYER | c | 2754 | 103 | 110 | 0.900 | 6 | 0x0 | VIFx | 0.0 | 0.0 | ST2 |
| LIVING ROOM/ DEN | h | 3499 | 146 | 121 | 0.900 | 7 | 0x0 | VIFx | 0.0 | 0.0 | st2 |
| BATH 2 | h | 912 | 38 | 18 | 0.900 | 4 | 0x0 | VIFx | 0.0 | 0.0 | st3 |
| BDRM 3 | h | 3361 | 141 | 127 | 0.900 | 7 | 0x0 | VIFx | 0.0 | 0.0 | st3 |
| BDRM 2 | c | 3718 | 143 | 148 | 0.900 | 7 | 0x0 | VIFx | 0.0 | 0.0 | st3 |
| BATH 3 | c | 69 | 2 | 3 | 0.900 | 4 | 0x0 | VIFx | 0.0 | 0.0 | ST3 |
| BDRM 4 | h | 3456 | 145 | 130 | 0.900 | 7 | 0x0 | VIFx | 0.0 | 0.0 | ST3 |
| Bed3 WIC | c | 14 | 0 | 1 | 0.900 | 4 | 0x0 | VIFx | 0.0 | 0.0 | st3 |
| bed2 WIC | c | 14 | 0 | 1 | 0.900 | 4 | 0x0 | VIFx | 0.0 | 0.0 | st3 |

## Supply Trunk Detail Table

| Name | Trunk Type | Htg (cfm) | Clg (cfm) | Design FR | Veloc (fpm) | Diam (in) | Rect Duct Size (in) | Duct Material | Trunk |
|---|---|---|---|---|---|---|---|---|---|
| st1 | Peak AVF | 959 | 1018 | 0.900 | 576 | 18 | 0 x 0 | VinlFlx | P |
| P | Peak AVF | 1800 | 1800 | 0.900 | 682 | 22 | 0 x 0 | VinlFlx | |
| ST2 | Peak AVF | 571 | 635 | 0.900 | 594 | 14 | 0 x 0 | VinlFlx | st1 |
| ST3 | Peak AVF | 469 | 427 | 0.900 | 598 | 12 | 0 x 0 | VinlFlx | p |
| st4 | Peak AVF | 357 | 349 | 0.900 | 654 | 10 | 0 x 0 | VinlFlx | p |

## Return Branch Detail Table

| Name | Grill Size (in) | Htg (cfm) | Clg (cfm) | TEL (ft) | Design FR | Veloc (fpm) | Diam (in) | RectSize (in) | Stud/Joist Opening (in) | Duct Matl | Trunk |
|---|---|---|---|---|---|---|---|---|---|---|---|
| RA2 | 14x14 | 357 | 349 | 10.0 | 0.110 | 654 | 10 | 0x 0 | | VlFx | p |
| RA1 | 20x20 | 714 | 769 | 10.0 | 0.110 | 551 | 16 | 0x 0 | | VlFx | p |
| ra3 | 20x20 | 729 | 683 | 10.0 | 0.110 | 682 | 14 | 0x 0 | | VlFx | p |

## Return Trunk Detail Table

| Name | Trunk Type | Htg (cfm) | Clg (cfm) | Design FR | Veloc (fpm) | Diam (in) | Rect Duct Size (in) | Duct Material | Trunk |
|---|---|---|---|---|---|---|---|---|---|
| p | Peak AVF | 1800 | 1800 | 0.110 | 682 | 22 | 0 x 0 | VinlFlx | |

# COLUMBIA COUNTY BUILDING DEPARTMENT

## RESIDENTIAL MINIMUM PLAN REQUIREMENTS AND CHECKLIST FOR FLORIDA BUILDING CODE 2001
## ONE (1) AND TWO (2) FAMILY DWELLINGS

ALL REQUIREMENTS ARE SUBJECT TO CHANGE
EFFECTIVE MARCH 1, 2002

**ALL BUILDING PLANS MUST INDICATE THE FOLLOWING ITEMS AND INDICATE COMPLIANCE WITH CHAPTER 1606 OF THE FLORIDA BUILDING CODE 2001 BY PROVIDING CALCULATIONS AND DETAILS THAT HAVE THE SEAL AND SIGNATURE OF A CERTIFIED ARCHITECT OR ENGINEER REGISTERED IN THE STATE OF FLORIDA, OR ALTERNATE METHODOLOGIES, APPROVED BY THE STATE OF FLORIDA BUILDING COMMISSION FOR ONE-AND-TWO FAMILY DWELLINGS. FOR DESIGN PURPOSES THE FOLLOWING BASIC WIND SPEED AS PER FIGURE 1606 SHALL BE USED.**

WIND SPEED LINE SHALL BE DEFINED AS FOLLOWS: THE CENTERLINE OF INTERSTATE75.

1. ALL BUILDINGS CONSTRUCTED EAST OF SAID LINE SHALL BE-------- 100 MPH
2. ALL BUILDINGS CONSTRUCTED WEST OF SAID LINE SHALL BE-------110 MPH
3. NO AREA IN COLUMBIA COUNTY IS IN A WIND BORNE DEBRIS REGION

**APPLICANT – PLEASE CHECK ALL APPLICABLE BOXES BEFORE SUBMITTAL**

**GENERAL REQUIREMENTS:** Two (2) complete sets of plans containing the following:

| Applicant | Plans Examiner | |
|---|---|---|
| ☑ | ☐ | All drawings must be clear, concise and drawn to scale ("Optional " details that are not used shall be marked void or crossed off). Square footage of different areas shall be shown on plans. |
| ☑ | ☐ | Designers name and signature on document (FBC 104.2.1). If licensed architect or engineer, official seal shall be affixed. |
| ☑ | ☐ | **Site Plan including:**<br>a) Dimensions of lot<br>b) Dimensions of building set backs<br>c) Location of all other buildings on lot, well and septic tank if applicable, and all utility easements.<br>d) Provide a full legal description of property. |
| ☑ | ☐ | **Wind-load Engineering Summary, calculations and any details required**<br>a) Plans or specifications must state compliance with FBC Section 1606<br>b) The following information must be shown as per section 1606.1.7 FBC<br>a. Basic wind speed (MPH)<br>b. Wind importance factor (I) and building category<br>c. Wind exposure – if more than one wind exposure is used, the wind exposure and applicable wind direction shall be indicated<br>d. The applicable internal pressure coefficient<br>e. Components and Cladding. The design wind pressure in terms of psf (kN/m²), to be used for the design of exterior component and cladding materials not specifically designed by the registered design professional |
| ☑ | ☐ | **Elevations including:** |
| ☑ | ☐ | a) All sides |
| ☑ | ☐ | b) Roof pitch |
| ☑ | ☐ | c) Overhang dimensions and detail with attic ventilation |
| ☐ N/A | ☐ | d) Location, size and height above roof of chimneys |
| ☐ N/A | ☐ | e) Location and size of skylights |
| ☑ | ☐ | f) Building height |
| ☑ | ☐ | e) Number of stories |

**Floor Plan including:**

- a) Rooms labeled and dimensioned
- b) Shear walls
- c) Windows and doors (including garage doors) showing size, mfg., approval listing and attachment specs. (FBC 1707) and safety glazing where needed (egress windows in bedrooms to be shown)
- N/A d) Fireplaces (gas appliance) (vented or non-vented) or wood burning with hearth
- N/A e) Stairs with dimensions (width, tread and riser) and details of guardrails and handrails
- f) Must show and identify accessibility requirements (accessible bathroom)

**Foundation Plan including:**

- a) Location of all load-bearing wall with required footings indicated as standard Or monolithic and dimensions and reinforcing
- b) All posts and/or column footing including size and reinforcing
- c) Any special support required by soil analysis such as piling
- d) Location of any vertical steel

**Roof System:**

- a) Truss package including:
  1. Truss layout and truss details signed and sealed by Fl. Pro. Eng.
  2. Roof assembly (FBC 104.2.1 Roofing system, materials, manufacturer, fastening requirements and product evaluation with wind resistance rating)
- N/A b) Conventional Framing Layout including:
  1. Rafter size, species and spacing
  2. Attachment to wall and uplift
  3. Ridge beam sized and valley framing and support details
  4. Roof assembly (FBC 104.2.1 Roofing systems, materials, manufacturer, fastening requirements and product evaluation with wind resistance rating)

**Wall Sections including:**

- a) Masonry wall
  1. All materials making up wall
  2. Block size and mortar type with size and spacing of reinforcement
  3. Lintel, tie-beam sizes and reinforcement
  4. Gable ends with rake beams showing reinforcement or gable truss and wall bracing details
  5. All required connectors with uplift rating and required number and size of fasteners for continuous tie from roof to foundation
  6. Roof assembly shown here or on roof system detail (FBC 104.2.1 Roofing system, materials, manufacturer, fastening requirements and product evaluation with resistance rating)
  7. Fire resistant construction (if required)
  8. Fireproofing requirements
  9. Shoe type of termite treatment (termicide or alternative method)
  10. Slab on grade
      a. Vapor retardant (6mil. Polyethylene with joints lapped 6 inches and sealed)
      b. Must show control joints, synthetic fiber reinforcement or Welded fire fabric reinforcement and supports
  11. Indicate where pressure treated wood will be placed
  12. Provide insulation R value for the following:
      a. Attic space
      b. Exterior wall cavity
      c. Crawl space (if applicable)

☐ N/A ☐ **b) Wood frame wall**

1. All materials making up wall
2. Size and species of studs
3. Sheathing size, type and nailing schedule
4. Headers sized
5. Gable end showing balloon framing detail or gable truss and wall hinge bracing detail
6. All required fasteners for continuous tie from roof to foundation (truss anchors, straps, anchor bolts and washers)
7. Roof assembly shown here or on roof system detail (FBC104.2.1 Roofing system, materials, manufacturer, fastening requirements and product evaluation with wind resistance rating)
8. Fire resistant construction (if applicable)
9. Fireproofing requirements
10. Show type of termite treatment (termicide or alternative method)
11. Slab on grade
    a. Vapor retardant (6Mil. Polyethylene with joints lapped 6 inches and sealed
    b. Must show control joints, synthetic fiber reinforcement or welded wire fabric reinforcement and supports
12. Indicate where pressure treated wood will be placed
13. Provide insulation R value for the following:
    a. Attic space
    b. Exterior wall cavity
    c. Crawl space (if applicable)

☐ N/A ☐ c) Metal frame wall and roof (designed, signed and sealed by Florida Prof. Engineer or Architect)

**Floor Framing System:**

☐ N/A ☐ a) Floor truss package including layout and details, signed and sealed by Florida Registered Professional Engineer

☐ ☐ b) Floor joist size and spacing

☐ ☐ c) Girder size and spacing

☐ N/A ☐ d) Attachment of joist to girder

☐ ☐ e) Wind load requirements where applicable

☐ ☐ **Plumbing Fixture layout**

**Electrical layout including:**

☐ ☐ a) Switches, outlets/receptacles, lighting and all required GFCI outlets identified

☐ ☐ b) Ceiling fans

☐ ☐ c) Smoke detectors

☐ ☐ d) Service panel and sub-panel size and location(s)

☐ ☐ e) Meter location with type of service entrance (overhead or underground)

☐ ☐ f) Appliances and HVAC equipment

☐ ☐ g) Arc Fault Circuits (AFCI) in bedrooms

**HVAC information**

☐ ☐ a) Manual J sizing equipment or equivalent computation

☐ ☐ b) Exhaust fans in bathroom

☐ ☐ **Energy Calculations** (dimensions shall match plans)

☐ N/A ☐ **Gas System** Type (LP or Natural) Location and BTU demand of equipment

☐ N/A ☐ **Disclosure Statement for Owner Builders**

☐ ☐ ***Notice Of Commencement Required Before Any Inspections Will Be Done**

☐ ☐ **Private Potable Water**

a) Size of pump motor

b) Size of pressure tank

c) Cycle stop valve if used

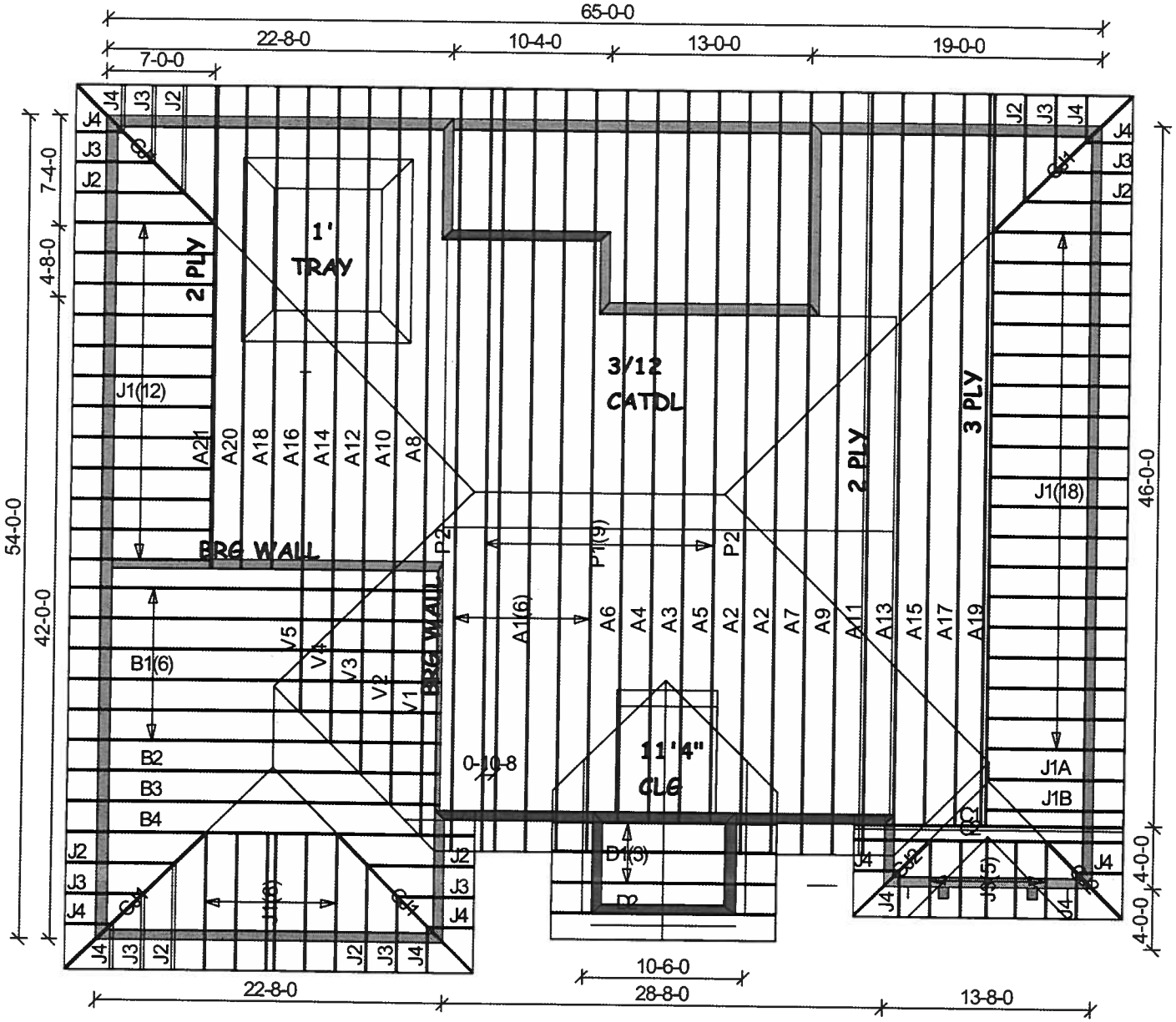



Mayo Truss Co. Inc.
845 East US 27
MAYO, FL 32066
(386)294-3988
(877)-558-6262


# HOMES BY WHITTAKER

BOHLMANN (#2105)

Roof Loading
TC Live: 20.00 psf
TC Dead: 10.00 psf
BC Live: 0.00 psf
BC Dead: 10.00 psf
TC Stress Inc: 25.00
BC Stress Inc: 25.00

Account: CONTRACTORS
Job: whitt-bohlmann
Designer: M MURRAY
Checker: M MURRAY
Date: 08-09-06

| Qty | Plys | Truss Type | Mark | Reactions Horizontal | Vertical | Uplift | Sketch |
|---|---|---|---|---|---|---|---|
| | | | whitt-bohlmann/ | | | | |
| 6 | 1 | SP | A1 | 218 | 1480 | 210 | |
| | | | | | 2891 | 419 | |
| | | | | 220 | | 564 | |
| | | | whitt-bohlmann/ | | | | |
| 2 | 1 | SP | A2 | 219 | 1247 | 185 | |
| | | | | | 2662 | 430 | |
| | | | | 220 | 142 | 338 | |
| | | | whitt-bohlmann/ | | | | |
| 1 | 1 | SP | A3 | 220 | 1149 | 160 | |
| | | | | | 2551 | 429 | |
| | | | | 184 | 178 | 282 | |
| | | | whitt-bohlmann/ | | | | |
| 1 | 1 | SP | A4 | 219 | 1147 | 160 | |
| | | | | | 2556 | 430 | |
| | | | | 185 | 177 | 283 | |
| | | | whitt-bohlmann/ | | | | |
| 1 | 1 | SP | A5 | 206 | 1069 | 149 | |
| | | | | | 2844 | 469 | |
| | | | | 192 | 177 | 355 | |
| | | | whitt-bohlmann/ | | | | |
| 1 | 1 | SP | A6 | 206 | 1096 | 152 | |
| | | | | | 2746 | 459 | |
| | | | | 192 | 178 | 333 | |
| | | | whitt-bohlmann/ | | | | |
| 1 | 1 | SP | A7 | 196 | 1240 | 186 | |
| | | | | | 2686 | 428 | |
| | | | | 198 | 160 | 339 | |
| | | | whitt-bohlmann/ | | | | |
| 1 | 1 | HIPP | A8 | 360 | 1186 | 169 | |
| | | | | 180 | 1314 | 168 | |
| | | | whitt-bohlmann/ | | | | |
| 1 | 1 | SP | A9 | 170 | 1967 | 267 | |
| | | | | 174 | 1968 | 268 | |
| | | | whitt-bohlmann/ | | | | |
| 1 | 1 | SP | A10 | 340 | 1186 | 170 | |
| | | | | 160 | 1314 | 168 | |
| | | | whitt-bohlmann/ | | | | |
| 1 | 2 | SP | A11 | 151 | 1968 | 267 | |
| | | | | 153 | 1968 | 268 | |
| | | | whitt-bohlmann/ | | | | |
| 1 | 1 | SP | A12 | 304 | 1186 | 168 | |
| | | | | 143 | 1314 | 170 | |
| | | | whitt-bohlmann/ | | | | |
| 1 | 1 | HIPP | A13 | 161 | 1839 | 245 | |
| | | | | 134 | 1967 | 267 | |
| | | | whitt-bohlmann/ | | | | |
| 1 | 1 | SP | A14 | 268 | 1186 | 165 | |
| | | | | 126 | 1314 | 172 | |
| | | | whitt-bohlmann/ | | | | |
| 1 | 1 | HIPP | A15 | 139 | 1840 | 245 | |
| | | | | 112 | 1968 | 267 | |

| Qty | Plys | Truss Type | Mark | Reactions Horizontal | Vertical | Uplift | Sketch |
|---|---|---|---|---|---|---|---|
| | | | whitt-bohlmann/ | | | | |
| 1 | 1 | SP | A16 | 232 | 1186 | 164 | |
| | | | | 109 | 1314 | 174 | |
| | | | whitt-bohlmann/ | | | | |
| 1 | 1 | HIPP | A17 | 117 | 1839 | 245 | |
| | | | | 89 | 1968 | 267 | |
| | | | whitt-bohlmann/ | | | | |
| 1 | 1 | SP | A18 | 196 | 1186 | 162 | |
| | | | | 92 | 1314 | 176 | |
| | | | whitt-bohlmann/ | | | | |
| 1 | 3 | HIPP | A19 | 91 | 4176 | 556 | |
| | | | | 66 | 4117 | 553 | |
| | | | whitt-bohlmann/ | | | | |
| 1 | 1 | SP | A20 | 160 | 1186 | 161 | 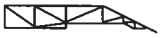 |
| | | | | 75 | 1314 | 177 | |
| | | | whitt-bohlmann/ | | | | |
| 1 | 2 | SP | A21 | 117 | 2545 | 341 | |
| | | | | 55 | 2602 | 350 | |
| | | | whitt-bohlmann/ | | | | |
| 6 | 1 | TR | B1 | 106 | 1023 | 141 | |
| | | | | 106 | 887 | 118 | |
| | | | whitt-bohlmann/ | | | | |
| 1 | 1 | TR | B2 | 106 | 1023 | 141 | |
| | | | | 106 | 887 | 118 | |
| | | | whitt-bohlmann/ | | | | |
| 1 | 1 | HIPP | B3 | 84 | 1023 | 141 | |
| | | | | 84 | 887 | 118 | |
| | | | whitt-bohlmann/ | | | | |
| 1 | 1 | HIPP | B4 | 65 | 2024 | 277 | |
| | | | | 65 | 2024 | 277 | |
| | | | whitt-bohlmann/ | | | | |
| 1 | 2 | HIPP | C1 | 40 | 7120 | 953 | |
| | | | | 43 | 4271 | 574 | |
| | | | whitt-bohlmann/ | | | | |
| 1 | 1 | HIPP | C2 | 23 | 830 | 134 | |
| | | | | 23 | 830 | 134 | |
| | | | whitt-bohlmann/ | | | | |
| 4 | 1 | MONO | CJ1 | 44 | 458 | 83 | |
| | | | | | 348 | 7 | |
| | | | | 126 | 239 | 83 | |
| | | | whitt-bohlmann/ | | | | |
| 2 | 1 | JCA2 | CJ2 | 15 | 204 | 60 | 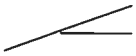 |
| | | | | 10 | 46 | 18 | |
| | | | | | 31 | | |
| | | | whitt-bohlmann/ | | | | |
| 3 | 1 | TR | D1 | 42 | 548 | 92 | |
| | | | | 42 | 547 | 92 | |
| | | | whitt-bohlmann/ | | | | |
| 1 | 1 | TR | D2 | 840 Continuous Brg | | | |

| Qty | Plys | Truss Type | Mark | Reactions Horizontal | Vertical | Uplift | Sketch |
|---|---|---|---|---|---|---|---|
| 36 | 1 | JCA2 | whitt-bohlmann/ J1 | 105<br>71 | 390<br>183<br>128 | 57<br>78 | 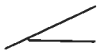 |
| 1 | 1 | TR | whitt-bohlmann/ J1A | 48<br>122 | 408<br>279 | 50<br>46 | |
| 1 | 1 | HHIP | whitt-bohlmann/ J1B | 35<br>89 | 408<br>279 | 54<br>51 | 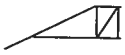 |
| 8 | 1 | JCA2 | whitt-bohlmann/ J2 | 74<br>50 | 310<br>128<br>90 | 51<br>55 | |
| 13 | 1 | JCA2 | whitt-bohlmann/ J3 | 43<br>29 | 230<br>74<br>52 | 45<br>32 | 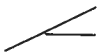 |
| 12 | 1 | JCA2 | whitt-bohlmann/ J4 | 13<br>8 | 151<br>13<br>19 | 19<br>8 | |
| 9 | 1 | TR | whitt-bohlmann/ P1 | 503 Continuous Brg | | | 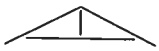 |
| 2 | 1 | HIPP | whitt-bohlmann/ P2 | 503 Continuous Brg | | | |
| 1 | 1 | VLM. | whitt-bohlmann/ V1 | 1497 Continuous Brg | | | |
| 1 | 1 | VLM. | whitt-bohlmann/ V2 | 1249 Continuous Brg | | | |
| 1 | 1 | VLMH | whitt-bohlmann/ V3 | 1172 Continuous Brg | | | 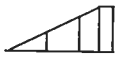 |
| 1 | 1 | VLMH | whitt-bohlmann/ V4 | 890 Continuous Brg | | | 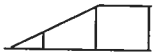 |
| 1 | 1 | VLMH | whitt-bohlmann/ V5 | 743 Continuous Brg | | | 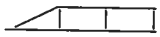 |

## Embedded Truss Anchors – HTA & TA series continued

| USP Stock No. | Ref. No. | Steel Gauge | W | H | Fastener Schedule[5,6] Per Anchor | Uplift (133% & 160%) Single Anchor[3] | Double Anchor[2] Member Thickness 1-1/2" | 3" | 3-1/2" | 4-1/2" | Fastener Schedule[5,6] Per Anchor | Uplift (133% & 160%) Single Anchor[3] | Double Anchor[2] Member Thickness 1-1/2" | 3" | 3-1/2" | 4-1/2" | Single Anchor[3] F1 | F2 | Double Anchor[2] F1 | F2 |
|---|---|---|---|---|---|---|---|---|---|---|---|---|---|---|---|---|---|---|---|---|
| HTA16-18 | META16 | 18 | 1-1/4 | 16 | (13) 10d x 1-1/2 | 1500 | 2375 | 2750 | 2875 | 3000 | (14) 10d x 1-1/2 | 1475 | 2375 | 2750 | 2875 | 2450 | 245 | 325 | 490 | 660 |
| | | | | | (10) 10d | 1500 | 2375 | 2750 | 2875 | 3000 | (12) 10d | 1500 | 2375 | 2750 | 2875 | 2450 | 245 | 325 | 490 | 660 |
| HTA20-18 | META20 | 18 | 1-1/4 | 20 | (13) 10d x 1-1/2 | 1500 | 2375 | 2750 | 2875 | 3000 | (15) 10d x 1-1/2 | 1500 | 2375 | 2750 | 2875 | 2450 | 245 | 325 | 490 | 660 |
| | | | | | (10) 10d | 1500 | 2375 | 2750 | 2875 | 3000 | (12) 10d | 1500 | 2375 | 2750 | 2875 | 2450 | 245 | 325 | 490 | 660 |
| HTA24-18 | META24 | 18 | 1-1/4 | 24 | (13) 10d x 1-1/2 | 1500 | 2375 | 2750 | 2875 | 3000 | (15) 10d x 1-1/2 | 1500 | 2375 | 2750 | 2875 | 2450 | 245 | 325 | 490 | 660 |
| | | | | | (10) 10d | 1500 | 2375 | 2750 | 2875 | 3000 | (12) 10d | 1500 | 2375 | 2750 | 2875 | 2450 | 245 | 325 | 490 | 660 |
| HTA12 | HETA12 | 16 | 1-1/4 | 12 | (6) 10d x 1-1/2 | 745 | 1490 | 1490 | 1490 | 1490 | (6) 10d x 1-1/2 | 630 | 1265 | 1265 | 1265 | 1265 | 430 | 660 | 860 | 1320 |
| | | | | | (6) 10d | 920 | -- -- | 1840 | 1840 | 1840 | (6) 10d | 775 | 1310 | 1550 | 1550 | 1550 | 590 | 660 | 1180 | 1320 |
| HTA16 | HETA16 | 16 | 1-1/4 | 16 | (14) 10d x 1-1/2 | 1890 | 2375 | 2750 | 2875 | 3125 | (14) 10d x 1-1/2 | 1475 | 2375 | 2750 | 2875 | 2950 | 245 | 330 | 490 | 660 |
| | | | | | (13) 10d | 1890 | 2375 | 2750 | 2875 | 3125 | (14) 10d | 1810 | 2375 | 2750 | 2875 | 3125 | 245 | 330 | 490 | 660 |
| HTA20 | HETA20 | 16 | 1-1/4 | 20 | (16) 10d x 1-1/2 | 1890 | 2375 | 2750 | 2875 | 3125 | (18) 10d x 1-1/2 | 1890 | 2375 | 2750 | 2875 | 3125 | 245 | 330 | 490 | 660 |
| | | | | | (13) 10d | 1890 | 2375 | 2750 | 2875 | 3125 | (15) 10d | 1890 | 2375 | 2750 | 2875 | 3125 | 245 | 330 | 490 | 660 |
| HTA24 | HETA24 | 16 | 1-1/4 | 24 | (16) 10d x 1-1/2 | 1890 | 2375 | 2750 | 2875 | 3125 | (18) 10d x 1-1/2 | 1890 | 2375 | 2750 | 2875 | 3125 | 245 | 330 | 490 | 660 |
| | | | | | (13) 10d | 1890 | 2375 | 2750 | 2875 | 3125 | (15) 10d | 1890 | 2375 | 2750 | 2875 | 3125 | 245 | 330 | 490 | 660 |
| TA12 | -- -- | 14 | 1 | 10-1/2 | (7) 10d x 1-1/2 | 860 | 1720 | 1720 | 1720 | 1720 | (7) 10d x 1-1/2 | 740 | 1475 | 1475 | 1475 | 1475 | 245 | 335 | 490 | 670 |
| | | | | | (7) 10d | 1045 | 2090 | 2090 | 2090 | 2090 | (7) 10d | 925 | 1845 | 1845 | 1845 | 1845 | 245 | 335 | 490 | 670 |
| TA14 | -- -- | 14 | 1 | 12-1/2 | (9) 10d x 1-1/2 | 1105 | 2210 | 2210 | 2210 | 2210 | (9) 10d x 1-1/2 | 950 | 1900 | 1900 | 1900 | 1900 | 245 | 335 | 490 | 670 |
| | | | | | (9) 10d | 1345 | 2375 | 2690 | 2690 | 2690 | (9) 10d | 1185 | 2375 | 2375 | 2375 | 2375 | 245 | 335 | 490 | 670 |
| TA16 | -- -- | 14 | 1 | 14-1/2 | (11) 10d x 1-1/2 | 1350 | 2375 | 2700 | 2700 | 2700 | (11) 10d x 1-1/2 | 1160 | 2320 | 2320 | 2320 | 2320 | 245 | 335 | 490 | 670 |
| | | | | | (11) 10d | 1520 | 2375 | 2750 | 2875 | 3040 | (11) 10d | 1450 | 2375 | 2750 | 2875 | 2905 | 245 | 335 | 490 | 670 |
| TA18 | -- -- | 14 | 1 | 16-1/2 | (13) 10d x 1-1/2 | 1520 | 2375 | 2750 | 2875 | 3040 | (13) 10d x 1-1/2 | 1370 | 2375 | 2740 | 2740 | 2740 | 245 | 335 | 490 | 670 |
| | | | | | (11) 10d | 1520 | 2375 | 2750 | 2875 | 3040 | (12) 10d | 1520 | 2375 | 2750 | 2875 | 3040 | 245 | 335 | 490 | 670 |
| TA20 | -- -- | 14 | 1 | 18-1/2 | (13) 10d x 1-1/2 | 1520 | 2375 | 2750 | 2875 | 3040 | (15) 10d x 1-1/2 | 1520 | 2375 | 2750 | 2875 | 3040 | 245 | 335 | 490 | 670 |
| | | | | | (11) 10d | 1520 | 2375 | 2750 | 2875 | 3040 | (12) 10d | 1520 | 2375 | 2750 | 2875 | 3040 | 245 | 335 | 490 | 670 |
| TA22 | -- -- | 14 | 1 | 20-1/2 | (13) 10d x 1-1/2 | 1520 | 2375 | 2750 | 2875 | 3040 | (15) 10d x 1-1/2 | 1520 | 2375 | 2750 | 2875 | 3040 | 245 | 335 | 490 | 670 |
| | | | | | (11) 10d | 1520 | 2375 | 2750 | 2875 | 3040 | (12) 10d | 1520 | 2375 | 2750 | 2875 | 3040 | 245 | 335 | 490 | 670 |
| TA24 | -- -- | 14 | 1 | 22-1/2 | (13) 10d x 1-1/2 | 1520 | 2375 | 2750 | 2875 | 3040 | (15) 10d x 1-1/2 | 1520 | 2375 | 2750 | 2875 | 3040 | 245 | 335 | 490 | 670 |
| | | | | | (11) 10d | 1520 | 2375 | 2750 | 2875 | 3040 | (12) 10d | 1520 | 2375 | 2750 | 2875 | 3040 | 245 | 335 | 490 | 670 |

1) Allowable loads have been increased 33-1/3% or 60% for wind or seismic loads; no further increase shall be permitted.
2) Anchors are installed on opposite sides of the wood member, centered in masonry bond beam.
3) Where 10d nails are used, minimum wood thickness is 1-3/4".
4) Grout or concrete compressive strength shall be 2500 psi or greater at 28 days.
5) 10d x 1-1/2 nails are 9 gauge (0.148" diameter) by 1-1/2" long.
6) Minimum nail penetration shall be 1-3/4" for 10d nails.



©Copyright 2001 United Steel Products Company

The HTT22 is a single-piece formed tension tie—no rivets, and a 4-ply formed seat which won't unfold during loading. No washers required. The LTT19 Light Tension Tie is designed for 2x joists or purlins and the LTT20B is for nail- or bolt-on applications. The 3" nail spacing makes the LTT20B suitable for wood I-joists if 10dx1½" nails are substituted for the specified 16d's.

The LTTI31 is designed for wood chord open web truss attachments to concrete or masonry walls.

**MATERIAL:** See table

**FINISH:** Galvanized. May be ordered HDG; check factory.

**INSTALLATION:**
- Use all specified fasteners. See General Notes.
- Use the specified number and type of nails to attach the strap portion to the top or side of purlin or beam (minimum 4x width (2-2x4 or 4x4), except LTT19). Bolt the base to the wall or foundation with a suitable anchor; see table for the required bolt diameter.
- Do not install LTT and MTT tension ties raised.
- **The HTT22 can be substituted for the MTT28B.**
- See Epoxy-Tie Adhesive System, pages 22 for tested, load-rated epoxies for anchor bolt options.

**CODES:** See page 10 for Code Listing Key Chart.

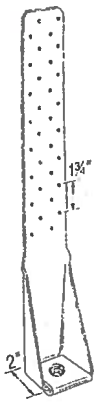


**HTT22**
**(HTT16 similar)**
**U.S. Patent 5,467,570**

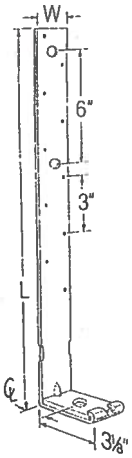


**LTT20B**

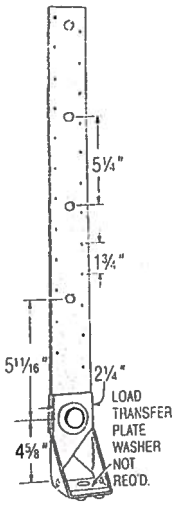


**MTT28B**
**U.S. Patent 4,744,192**

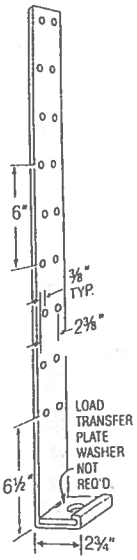


**LTTI31**

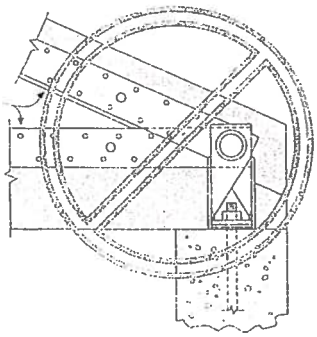

**Do not modify the MTT28B.**

**Do not rotate the MTT28B's strap around the rivet.**
**The strap must be in line vertically with the body of the holdown to achieve table loads.**

**See Girder Tiedown Connectors on page 126 for installation solutions.**

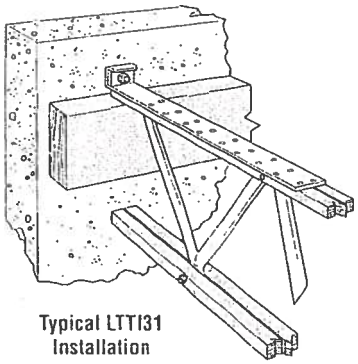

**Typical LTTI31 Installation**

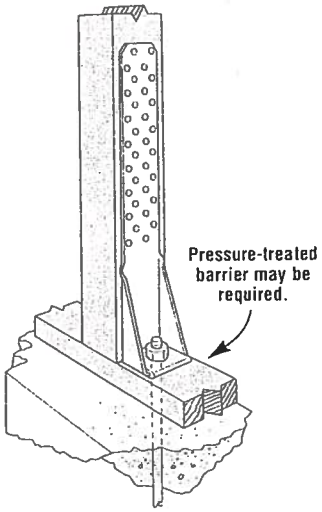


**Typical HTT22 Installation as a Holdown**

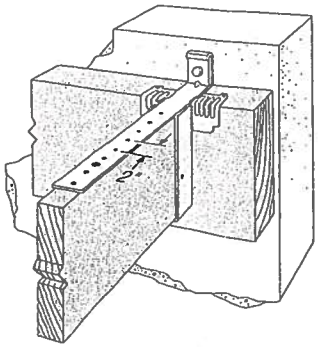

**Typical LTT19 Installation**
***(LTT20B similar)***

| Model No. | Material (Ga) Strap | Material (Ga) Plate | Dimensions W | Dimensions L | Dimensions ℄ | Seat Thickness | Fasteners: Anchor Bolts | Fasteners: Nails | Fasteners: Bolts Qty | Fasteners: Bolts Dia | Avg Ult Tension | Allowable Tension Loads DF/SP (133) Nails | (133) Bolts | (160) Nails | (160) Bolts | Allowable Tension Loads - SPF/HF (133) Nails | (160) Nails | Deflection at Highest Allowable Design Load | Code Ref. |
|---|---|---|---|---|---|---|---|---|---|---|---|---|---|---|---|---|---|---|---|
| LTT19 | 16 | 3 | 1¾ | 19⅞ | 1⅜ | 5/16 | ¾ | 8-16d Sinkers | — | — | 4250 | 1205 | — | 1350 | — | 1085 | 1305 | 0.107 | 2, 40, 82 |
| LTT20B[6] | 12 | 3 | 2 | 19¾ | 1⅜ | 5/16 | ½, ⅝ or ¾ | 10-16d | 2 | ½ | 8733 | 1750 | 1220 | 1750 | 1460 | 1675 | 1750 | 0.164 | |
| LTTI31 | 18 | 3 | 3¾ | 31 | 1⅜ | ¼ | ⅝ | 18-10dx1½ | — | — | 7770 | 2185 | — | 2310 | — | 1985 | 2310 | 0.125 | 6, 40, 82 |
| HTT16 | 11 | — | 2½ | 16 | 1⅜ | 7/16 | ⅝ | 18-16d | — | — | 13150 | 3480 | — | 4175 | — | 3080 | 3695 | 0.037 | 30, 99 |
| HTT22 | 11 | — | 2½ | 22 | 1⅜ | 7/16 | ⅝ | 32-16d Sinkers | — | — | 13150 | 5250 | — | 5260 | — | 4670 | 5250 | 0.087 | 40, 99 |
| MTT28B | 12 | 7 | 2 5/16 | 27 | 1½ | ⅜ | ⅝ or ¾ | 24-16d | 4 | ½ | — | 4455 | 2150 | 4455 | 2725 | 4140 | 4455 | 0.125 | 40 |

1. Allowable loads for HTT are based on the lower of the 2001 NDS fastener values or the ultimate load on a steel test jig divided by 2.5.
2. 16d sinkers (9 ga x 3¼") or 10d commons may be substituted for the specified 16d commons at 0.85 of the table loads.
3. The designer must specify anchor bolt type, length and embedment.
4. Allowable loads have been increased 33% and 60% for earthquake or wind loading with no further increase allowed; reduce where other loads govern.
5. Bolt values are based on a minimum lumber thickness of 1½".
6. If a ½" or ⅝" anchor bolt is used for the LTT20B, add a standard cut washer to the seat. No additional washer is required for a ¾" anchor bolt. See table for appropriate anchor bolt sizes.
7. HTT22 holdown installed raised off the plate has a reduced load of 5190 lbs. HTT16 installed raised off the plate will achieve the table loads.

Catalog C-2004 © Copyright 2003 SIMPSON STRONG-TIE CO. INC.

# LUS/MUS/HUS/HHUS/HGUS DOUBLE SHEAR JOIST HANGERS

*This product is preferable to similar connectors because of a) easier installation, b) higher loads, c) lower installed cost, or a combination of these features.*

MUS completes the Simpson Strong-Tie line of face mount truss to truss connectors. The MUS has increased load capacity and bearing compared to LUS connectors for medium load truss applications.

All hangers in this series have double shear nailing. This patented innovation distributes the load through two points on each joist nail for greater strength. It also allows the use of fewer nails, faster installation, and the use of common nails for all connections. *(Do not bend or remove tabs)*

**MATERIAL:** See tables on page 105.

**FINISH:** Galvanized. Some products available in stainless steel or Z-MAX; see Corrosion-Resistance, page 5.

**INSTALLATION** • Use all specified fasteners. See General Notes.

- Nails must be driven at an angle through the joist or truss into the header to achieve the table loads.
- Not designed for welded or nailer applications.
- 16d sinkers *(9 gauge x 3¼")* may be used where 10d commons are specified with no reduction in load. Where 16d commons are specified, 10d commons or 16d sinkers *(9 gauge x 3¼")* may be used at 0.85 of the table load.
- With 3x carrying members, use 16d x 2½" nails into the header and 16d commons into the joist with no load reduction. With 2x carrying members, use 10d x 1½" nails into the header and 10d commons into the joist, and reduce the load to 0.64 of the table value.

**OPTIONS:** • LUS and MUS hangers cannot be modified.

- HUS hangers available with the header flanges turned in for 2-2x *(3⅛")* and 4x only, with no load reduction. See HUSC Concealed Flange illustration.
- Concealed flanges are not available for HGUS and HHUS.
- See Hanger Options, page 158, for sloped and/or skewed HHUS models.
- Other sizes available; consult your Simpson representative.

**CODES:** See page 10 for Code Listing Key Chart.

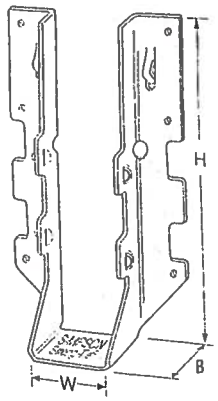


LUS28

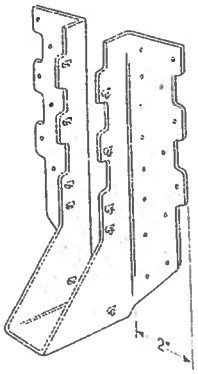


HUS210 *(HUS26, HUS28, and HHUS similar)*

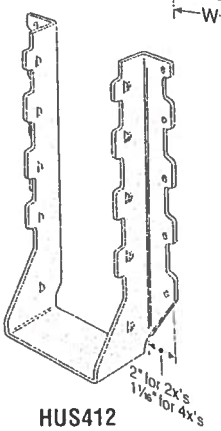


HUS412

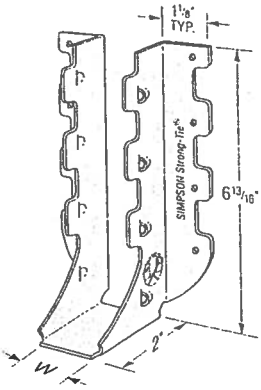


MUS28

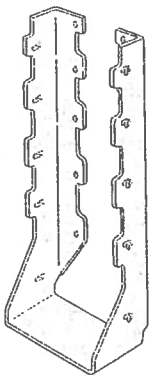

HUSC Concealed Flanges *(not available for HHUS, HGUS and HUS2x)*

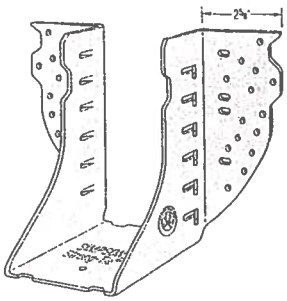


HGUS28-2

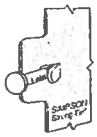

Double Shear Nailing Side View

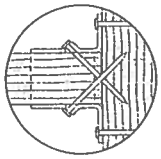

Double Shear Nailing Top View

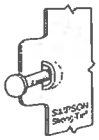

Dome Double Shear Nailing prevents tabs breaking off *(available on some models)*

U.S. Patent 5,603,580

| Model No. | Min. Heel Height | Ga | Dimensions W | Dimensions H | Dimensions B | Fasteners Carrying Member | Fasteners Carried Member |
|---|---|---|---|---|---|---|---|
| SINGLE 2x SIZES | | | | | | | |
| LUS24 | 2⅝ | 18 | 1 9/16 | 3⅛ | 1¾ | 4-10d | 2-10d |
| LUS26 | 4¼ | | 1 9/16 | 4¾ | 1¾ | 4-10d | 4-10d |
| MUS26 | 4 11/16 | 18 | 1 9/16 | 5 3/16 | 2 | 6-10d | 6-10d |
| LUS28 | 4 3/16 | 18 | 1 9/16 | 6⅝ | 1¾ | 6-10d | 4-10d |
| MUS28 | 6 5/16 | 18 | 1 9/16 | 6 13/16 | 2 | 8-10d | 8-10d |
| LUS210 | 4¼ | 18 | 1 9/16 | 7 13/16 | 1¾ | 8-10d | 4-10d |
| HUS26 | 4 5/16 | 16 | 1⅝ | 5⅜ | 3 | 14-16d | 6-16d |
| HGUS26 | 4 9/16 | 12 | 1⅝ | 5⅜ | 5 | 20-16d | 8-16d |
| HUS28 | 6½ | 16 | 1⅝ | 7 | 3 | 22-16d | 8-16d |
| HGUS28 | 5½ | 12 | 1⅝ | 7 1/16 | 5 | 36-16d | 12-16d |
| HUS210 | 8⅜ | 16 | 1⅝ | 9 | 3 | 30-16d | 10-16d |

| Model No. | Min. Heel Height | Fasteners Carrying Member | Fasteners Carried Member | Doug-Fir Larch/So. Pine Allowable Loads Uplift (133) | Floor (100) | Snow (115) | Roof (125) | Wind (133) | Spruce-Pine-Fir Allowable Loads Uplift (133) | Floor (100) | Snow (115) | Roof (125) | Wind (133) |
|---|---|---|---|---|---|---|---|---|---|---|---|---|---|
| HUS26 | 3½ | 14-16d | 4-16d | 1135 | 2330 | 2680 | 2915 | 3055 | 975 | 2010 | 2295 | 2330 | 2355 |
| | 4 5/16 | 14-16d | 6-16d | 1550 | 2565 | 2950 | 3205 | 3335 | 1335 | 2210 | 2490 | 2540 | 2580 |

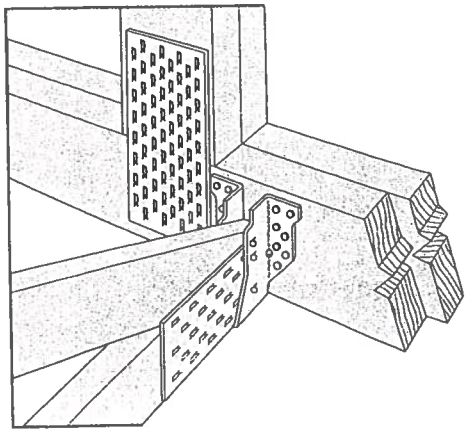

Typical HUS26 with Reduced Heel Height

*(Truss Designer to provide fastener quantity for connecting multiple members together)*

Catalog C-2004 © Copyright 2003 SIMPSON STRONG-TIE CO., INC.

Job 2105
Bohlman

# 25267

HOMETEAM
PEST DEFENSE®

## New Construction Subterranean Termite Treatment

This report is submitted for information purposes to the builder on (new) construction cases where treatment for prevention of subterranean termite infestation is required by the Florida Building Code, Section 104.2.6.

All contracts for services are between the Pest Control Operator and builder, unless stated otherwise.

### Section 1: Hometeam Pest Defense

Company Address: 1621 NE 6th Avenue City: Ocala State: FL
Zip: 34470-3642 Company Phone No.: 352-368-3845 Business License No.: JB1537

### Section 2: Builder Information

Company Name: HOMES BY WHITAKER, INC.
Phone No.:

### Section 3: Property Information

Building Permit No.: 25267
Location of Structure(s) Treated: 122 SW GREENWOOD TER, FORT WHITE,

Type of Construction: ☒ Slab ☐ Basement ☐ Crawl ☐ Other
Approximate Depth of Footing: Outside: Inside: Type Fill:

### Section 4: Treatment Information

Date(s) of Treatment(s): EPA Registration No.: 64405-1

Brand Name of Product(s) Used: Bora-Care

Final Mix Solution: .23 Treatment Area Sq. Ft.: 3296

Linear Ft. Linear Ft. of Masonry Voids:

Total Gallons of Termiticide Applied: 2.5

| | | |
|---|---|---|
| Service Agreement Available? | ☒ Yes | ☐ No |
| **Liquid** treatment: | ☐ Yes | ☐ No |
| **Liquid Final** exterior treatment: | ☐ Yes | ☐ No |
| **Borate** treatment: | ☐ Yes | ☐ No |
| **Bait** in lieu of Pretreat: | ☐ Yes | ☐ No |

This building has received a complete treatment for the prevention of subterranean termites. Treatment is in accordance with the rules and laws established by the Florida Department of Agricultural and Consumer Services. Initial

Note: Some state laws require service agreements to be issued. This form does not preempt state law.

Attachments (List)

Comments

Name of Applicator(s): Tim Denny Certification No.: JE103664

Authorized Signature Date 01/24/07

RH-NT9/05

HOMETEAM
PEST DEFENSE®

# New Construction Subterranean Termite Treatment

This report is submitted for information purposes to the builder on (new) construction cases where treatment for prevention of subterranean termite infestation is required by the Florida Building Code, Section 104.2.6.

All contracts for services are between the Pest Control Operator and builder, unless stated otherwise.

## Section 1: Hometeam Pest Defense

Company Address: 1621 NE 6th Avenue City: Ocala State: FL

Zip: 34470-3642 Company Phone No.: 352-368-3845 Business License No.: JB1537

## Section 2: Builder Information

Company Name: HOMES BY WHITAKER, INC.

Phone No.: _____

## Section 3: Property Information

Building Permit No.: 25267

Location of Structure(s) Treated: 122 SW GREENWOOD TER, FORT WHITE,

Type of Construction: ☒ Slab ☐ Basement ☐ Crawl ☐ Other

Approximate Depth of Footing: Outside: _____ Inside: _____ Type Fill: _____

## Section 4: Treatment Information

Date(s) of Treatment(s): _____ EPA Registration No.: 64405-1

Brand Name of Product(s) Used: Bora-Care

Final Mix Solution: .23 Treatment Area Sq. Ft.: 3296

Linear Ft. _____ Linear Ft. of Masonry Voids: _____

Total Gallons of Termiticide Applied: _____

| | | |
|---|---|---|
| Service Agreement Available? | ☒ Yes | ☐ No |
| **Liquid** treatment: | ☐ Yes | ☐ No |
| **Liquid Final** exterior treatment: | ☐ Yes | ☐ No |
| **Borate** treatment: | ☐ Yes | ☐ No |
| **Bait** in lieu of Pretreat: | ☐ Yes | ☐ No |

This building has received a complete treatment for the prevention of subterranean termites. Treatment is in accordance with the rules and laws established by the Florida Department of Agricultural and Consumer Services. Initial _____

Note: Some state laws require service agreements to be issued. This form does not preempt state law.

Attachments (List) _____

Comments _____

Name of Applicator(s): _____ Certification No.: _____

Authorized Signature _____ Date 01/24/07

RH-NT9/05

# GEO-TECH, INC.

*Engineering Consultants in Geotechnical • Environmental • Construction Materials Testing*

#25267

## FIELD DENSITY WORKSHEET

CLIENT HBW DATE 2-9-07

PROJECT NAME Bohlman Res. 1225 W Greenwood Terr Ft White PROJECT NO.

PERMIT NO. Columbia Co. 00002526

EARTH CONTRACTOR TESTED BY S. L

COMPACTION REQUIREMENT (%) 95 ☐ Standard Proctor ☑ Modified Proctor FIELD CONTACT

TOTAL ON-SITE TIME MILES FROM OFFICE

☐ Limerock ☐ Subgrade ☐ Pipe Backfill ☑ Building Pad ☑ Building Footing ☐ Other

| TEST LOCATION | LAB PROCTOR DENS. | LAB PROCTOR OMC | TEST DEPTH | PROBE DEPTH | % MOIST. | WET DENSITY (PCF) | DRY DENSITY (PCF) | % COMP. |
|---|---|---|---|---|---|---|---|---|
| | 105.1 | 10.2 | F/G | 12" | | | | |
| Center of South Footing | | | | | 5.0 | 109.0 | 103.8 | 98.8 |
| Center of Pad | | | | | 5.0 | 109.4 | 104.2 | 99.1 |
| 6' South of NW Corner of Footing | | | | | 5.4 | 109.1 | 103.5 | 98.2 |

REMARKS

* Density failed to meet minimum project requirement

** Retest indicates minimum density requirement was obtained.

( ) Client is aware of unsatisfactory test results.

4000 SW 35TH TERRACE, SUITE C • GAINESVILLE, FLORIDA 32608 • PHONE: (352) 372-1274 • FAX: (352) 372-2721

# CERTIFICATE OF

# OCCUPANCY

## COLUMBIA COUNTY, FLORIDA

## Department of Building and Zoning Inspection

***This Certificate of Occupancy is issued to the below named permit holder for the building and premises at the below named location, and certifies that the work has been completed in accordance with the Columbia County Building Code.***

**Parcel Number** 34-6S-16-04056-137

**Building permit No.** 000025267

**Use Classification** SFD,UTILITY

**Fire:** 16.74

**Permit Holder** HOMES BY WHITAKER

**Waste:**

**Owner of Building** GEORGE BOHLMANN

**Total:** 16.74

**Location:** 122 SW GREENWOOD TERR, FT. WHITE

**Date:** 07/26/2007

Harry Dicks 6/9

**Building Inspector**

**POST IN A CONSPICUOUS PLACE**
***(Business Places Only)***

# Notice of Final Subterranean Termite Treatment

(as required by Florida Building Code (FBC) 1816.1.7)

1/24/07 AM Don

Date of treatment Time Applicators name

Bora-Care 2-5 25267

Chemical name Number of gallons

Disodium Octaborate Tetrahydrate _____ % _____

Chemical active ingredient

12 & W GREENWOOD TERR.

Final treatment address and Lot #

INTERIOR 3296

Area treated Square footage

HOMES BY WHITAKER

**Contractor / Builder name**

The building has received a complete treatment for the prevention of subterranean termites. Treatment is in accordance with rules and laws established by the Florida Department of Agriculture and Consumer Services.

This final termite treatment notification is pursuant to Section: 104.2.7 of the Florida Building Code and Chapter 482 Florida Statutes 482.226 (6).

This final treatment notification does not change the original termite wood pretreatment date. The warranty renewal date for this structure will continue to be the original pretreatment date. HomeTeam Pest Defense will notify by mail the owners of the structure when the termite renewal is due for extended termite warranty coverage, and inspection.

Should it be determined that any portion of the termite Bora-Care wood pretreatment and/or slab, was damaged or disturbed in any way after any termite wood treatment, it is the responsibility of the builder/contractor to have this area retreated by HomeTeam Pest Defense. HomeTeam Pest Defense reserves the right to void all termite warranty coverage if this practice is not followed.

HOMETEAM PEST DEFENSE®

1621 N. E. 6th Avenue
Ocala, Florida 34470
(352) 368-3845 FAX: (352) 368-7956

25267 MONO/SLAB

# Notice of Preventative Treatments for Subterranean Termites

(as required by Florida Building Code (FBC) 104.2.6)

This property will receive T.M

**BORA-CARE®**

Wood Protection Treatment prior to the frame inspection of the construction phase

12 & W GREENWOOD TERR

**Location / address**

Disodium Octaborate Tetrahydrate % 23

**Termiticide a.i. to be used**

2/9/07

**Date of inspection**

Pursuant to Chapter 482.226, Florida Statues, this notice is required to be posted. Any licensee who performs control of any wood-destroying organism shall post notice of said treatment immediately adjacent to the access to the attic or crawl area or other readily accessible area of property treated.

HOMETEAM PEST DEFENSE®

1621 N.E. 6th Avenue
Ocala, Florida 34470
(352) 368-3845
Fax (352) 368-7956

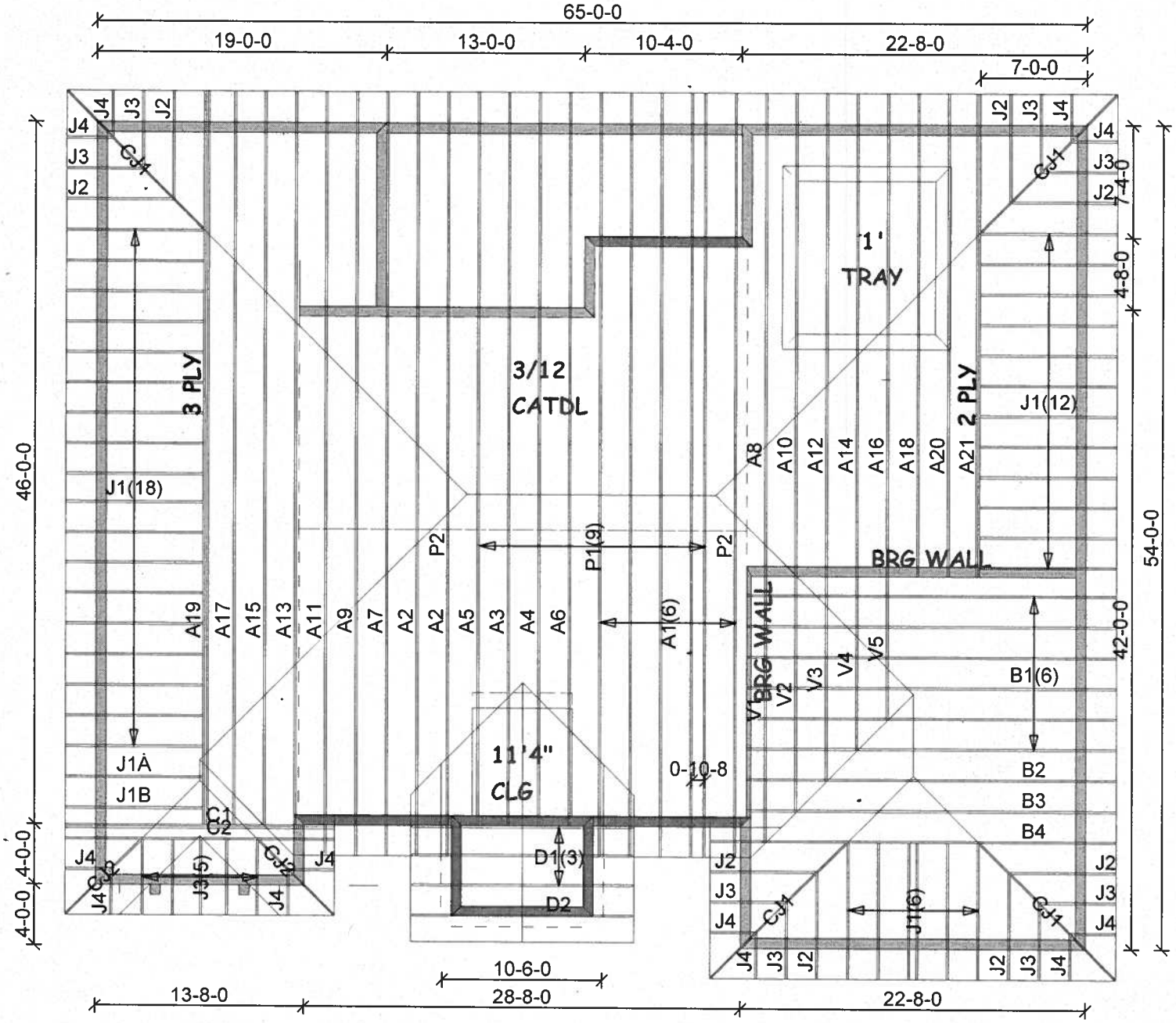



Mayo Truss Co. Inc.
845 East US 27
MAYO, FL 32066
(386)294-3988
(877)-558-6262


HOMES BY WHITTAKER

BOHLMANN (#2105)

110 MPH ASCE WIND LOAD

Roof Loading
TC Live: 20.00 psf
TC Dead: 10.00 psf
BC Live: 0.00 psf
BC Dead: 10.00 psf
TC Stress Inc: 25.00
BC Stress Inc: 25.00
Spacing: 2- 0- 0 o.c.

Account: CONTRACTORS
Job: whitt-bohlmann
Designer: M.MURRAY
Checker: M.MURRAY
Date: 09-02-06

| Qty | Plys | Truss Type | Mark | Reactions Horizontal | Vertical | Uplift | Sketch |
|---|---|---|---|---|---|---|---|
| | | | whitt-bohlmann/ | | | | |
| 6 | 1 | SP | A1 | 218 | 1480 | 210 | 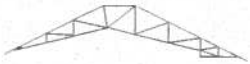 |
| | | | | | 2891 | 419 | |
| | | | | 220 | | 564 | |
| | | | whitt-bohlmann/ | | | | |
| 2 | 1 | SP | A2 | 219 | 1247 | 185 | |
| | | | | | 2662 | 430 | |
| | | | | 220 | 142 | 338 | |
| | | | whitt-bohlmann/ | | | | |
| 1 | 1 | SP | A3 | 220 | 1149 | 160 | 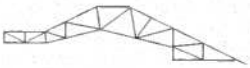 |
| | | | | | 2551 | 429 | |
| | | | | 184 | 178 | 282 | |
| | | | whitt-bohlmann/ | | | | |
| 1 | 1 | SP | A4 | 219 | 1147 | 160 | |
| | | | | | 2556 | 430 | |
| | | | | 185 | 177 | 283 | |
| | | | whitt-bohlmann/ | | | | |
| 1 | 1 | SP | A5 | 206 | 1069 | 149 | |
| | | | | | 2844 | 469 | |
| | | | | 192 | 177 | 355 | |
| | | | whitt-bohlmann/ | | | | |
| 1 | 1 | SP | A6 | 206 | 1096 | 152 | |
| | | | | | 2746 | 459 | |
| | | | | 192 | 178 | 333 | |
| | | | whitt-bohlmann/ | | | | |
| 1 | 1 | SP | A7 | 196 | 1240 | 186 | |
| | | | | | 2686 | 428 | |
| | | | | 198 | 160 | 339 | |
| | | | whitt-bohlmann/ | | | | |
| 1 | 1 | HIPP | A8 | 360 | 1186 | 169 | 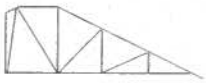 |
| | | | | 180 | 1314 | 168 | |
| | | | whitt-bohlmann/ | | | | |
| 1 | 1 | SP | A9 | 171 | 1210 | 182 | |
| | | | | | 2798 | 313 | |
| | | | | 174 | 185 | 230 | |
| | | | whitt-bohlmann/ | | | | |
| 1 | 1 | SP | A10 | 340 | 1186 | 170 | 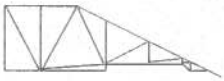 |
| | | | | 160 | 1314 | 168 | |
| | | | whitt-bohlmann/ | | | | |
| 1 | 1 | SP | A11 | 149 | 1128 | 173 | |
| | | | | | 3101 | 344 | |
| | | | | 152 | 196 | 421 | |
| | | | whitt-bohlmann/ | | | | |
| 1 | 1 | SP | A12 | 304 | 1186 | 168 | 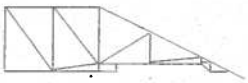 |
| | | | | 143 | 1314 | 170 | |
| | | | whitt-bohlmann/ | | | | |
| 1 | 1 | HIPP | A13 | 161 | 1839 | 245 | |
| | | | | 134 | 1967 | 267 | |
| | | | whitt-bohlmann/ | | | | |
| 1 | 1 | SP | A14 | 268 | 1186 | 165 | 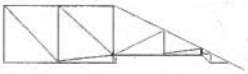 |
| | | | | 126 | 1314 | 172 | |

| Qty | Plys | Truss Type | Mark | Reactions Horizontal | Vertical | Uplift | Sketch |
|---|---|---|---|---|---|---|---|
| | | | whitt-bohlmann/ | | | | |
| 1 | 1 | HIPP | A15 | 139 | 1840 | 245 | |
| | | | | 112 | 1968 | 267 | |
| | | | whitt-bohlmann/ | | | | |
| 1 | 1 | SP | A16 | 232 | 1186 | 164 | 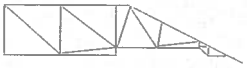 |
| | | | | 109 | 1314 | 174 | |
| | | | whitt-bohlmann/ | | | | |
| 1 | 1 | HIPP | A17 | 117 | 1839 | 245 | |
| | | | | 89 | 1968 | 267 | |
| | | | whitt-bohlmann/ | | | | |
| 1 | 1 | SP | A18 | 196 | 1186 | 162 | 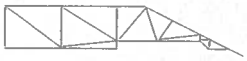 |
| | | | | 92 | 1314 | 176 | |
| | | | whitt-bohlmann/ | | | | |
| 1 | 3 | HIPP | A19 | 91 | 4176 | 556 | |
| | | | | 66 | 4117 | 553 | |
| | | | whitt-bohlmann/ | | | | |
| 1 | 1 | SP | A20 | 160 | 1186 | 161 | 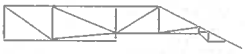 |
| | | | | 75 | 1314 | 177 | |
| | | | whitt-bohlmann/ | | | | |
| 1 | 2 | SP | A21 | 117 | 2545 | 341 | |
| | | | | 55 | 2602 | 350 | |
| | | | whitt-bohlmann/ | | | | |
| 6 | 1 | TR | B1 | 106 | 1023 | 141 | 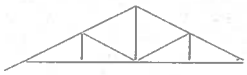 |
| | | | | 106 | 887 | 118 | |
| | | | whitt-bohlmann/ | | | | |
| 1 | 1 | TR | B2 | 106 | 1023 | 141 | 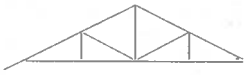 |
| | | | | 106 | 887 | 118 | |
| | | | whitt-bohlmann/ | | | | |
| 1 | 1 | HIPP | B3 | 84 | 1023 | 141 | 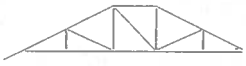 |
| | | | | 84 | 887 | 118 | |
| | | | whitt-bohlmann/ | | | | |
| 1 | 1 | HIPP | B4 | 65 | 2024 | 277 | |
| | | | | 65 | 2024 | 277 | |
| | | | whitt-bohlmann/ | | | | |
| 1 | 2 | HIPP | C1 | 40 | 7120 | 953 | |
| | | | | 43 | 4271 | 574 | |
| | | | whitt-bohlmann/ | | | | |
| 1 | 1 | HIPP | C2 | 23 | 830 | 134 | |
| | | | | 23 | 830 | 134 | |
| | | | whitt-bohlmann/ | | | | |
| 4 | 1 | MONO | CJ1 | 44 | 458 | 83 | 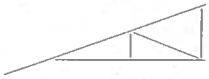 |
| | | | | | 348 | 7 | |
| | | | | 126 | 239 | 83 | |
| | | | whitt-bohlmann/ | | | | |
| 2 | 1 | JCA2 | CJ2 | 15 | 204 | 60 | |
| | | | | 10 | 46 | 18 | |
| | | | | | 31 | | |
| | | | whitt-bohlmann/ | | | | |
| 3 | 1 | TR | D1 | 42 | 548 | 92 | |
| | | | | 42 | 547 | 92 | |

| Qty | Plys | Truss Type | Mark | Reactions Horizontal | Vertical | Uplift | Sketch |
|---|---|---|---|---|---|---|---|
| 1 | 1 | TR | whitt-bohlmann/ D2 | | 840 Continuous Brg | | |
| 36 | 1 | JCA2 | whitt-bohlmann/ J1 | 105 | 390 | 57 | 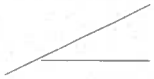 |
| | | | | 71 | 183 | 78 | |
| | | | | | 128 | | |
| 1 | 1 | TR | whitt-bohlmann/ J1A | 48 | 408 | 50 | 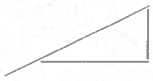 |
| | | | | 122 | 279 | 46 | |
| 1 | 1 | HHIP | whitt-bohlmann/ J1B | 35 | 408 | 54 | 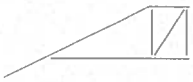 |
| | | | | 89 | 279 | 51 | |
| 8 | 1 | JCA2 | whitt-bohlmann/ J2 | 74 | 310 | 51 | 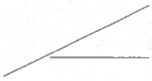 |
| | | | | 50 | 128 | 55 | |
| | | | | | 90 | | |
| 13 | 1 | JCA2 | whitt-bohlmann/ J3 | 43 | 230 | 45 | |
| | | | | 29 | 74 | 32 | |
| | | | | | 52 | | |
| 12 | 1 | JCA2 | whitt-bohlmann/ J4 | 13 | 151 | 19 | |
| | | | | 8 | 13 | | |
| | | | | | 19 | 8 | |
| 9 | 1 | TR | whitt-bohlmann/ P1 | | 503 Continuous Brg | | |
| 2 | 1 | HIPP | whitt-bohlmann/ P2 | | 503 Continuous Brg | | 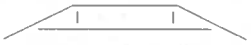 |
| 1 | 1 | VLM. | whitt-bohlmann/ V1 | | 1497 Continuous Brg | | 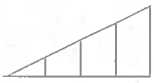 |
| 1 | 1 | VLM. | whitt-bohlmann/ V2 | | 1249 Continuous Brg | | |
| 1 | 1 | VLMH | whitt-bohlmann/ V3 | | 1172 Continuous Brg | | 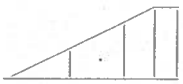 |
| 1 | 1 | VLMH | whitt-bohlmann/ V4 | | 890 Continuous Brg | | |
| 1 | 1 | VLMH | whitt-bohlmann/ V5 | | 743 Continuous Brg | | |

Permit Number: _____ Lot Number: _____

Miscellaneous: _____ Address: _____

The information in this box is for administrative purposes only and is not part of the engineering review.

Truss Fabricator: Mayo Truss Company, Inc

Job Reference: whitt-bohlmann - BOHLMANN

**Standard Loading:**

| | |
|---|---|
| T.C. Live | 20 psf |
| T.C Dead | 10 psf |
| B.C Live | 0 psf |
| B.C. Dead | 10 psf |
| Total | 40 psf |

ROBBINS ENGINEERING, INC.

P.O. Box 280055
Tampa, FL 33682-0055
Phone: (813) 972-1135

# Engineering Index Sheet

Index Page 1 of 1

ANSI/ASCE 7-02
Wind Speed - 110 MPH
Mean Roof Ht. - 15 FT
Exposure Catergory - B
Occupancy Factor - 1.00
MWFRS
Enclosed

| Job Number | Date | FBC - 2004 Chapter 16 and 23 | Specification Quantity |
|---|---|---|---|
| T06082949 | 08/28/2006 | | 39 |

A Professional Engineer's seal affixed to this Index Sheet indicates the acceptance of Professional Engineering responsibilities for individual truss components fabricated in accordance with the listed and attached Truss Specification Sheets. Determination as to the suitability of these individual truss components for any structure is the responsibilty of the Building Designer, as defined in ANSI/TPI 1-2002, Section 2.2. Permanent files of the original Truss Specificstion Sheet are maintained by Robbins Engineering, Inc. Questions regarding this Index Sheet and/or the attached Specification Sheets may be directed to the truss fabricator listed above or Robbins Engineering, Inc. (Sofware - Online Plus)

Notes: Refer to individual truss design drawings for special loading conditions.

| | Date | Mark | | Date | Mark | | Date | Mark | | Date | Mark |
|---|---|---|---|---|---|---|---|---|---|---|---|
| 1 | 08/28/06 | A1 | 2 | 08/28/06 | A2 | 3 | 08/28/06 | A3 | 4 | 08/28/06 | A4 |
| 5 | 08/28/06 | A5 | 6 | 08/28/06 | A6 | 7 | 08/28/06 | A7 | 8 | 08/28/06 | A8 |
| 9 | 08/28/06 | A9 | 10 | 08/28/06 | A10 | 11 | 08/28/06 | A11 | 12 | 08/28/06 | A12 |
| 13 | 08/28/06 | A13 | 14 | 08/28/06 | A14 | 15 | 08/28/06 | A15 | 16 | 08/28/06 | A16 |
| 17 | 08/28/06 | A17 | 18 | 08/28/06 | A18 | 19 | 08/28/06 | A19 | 20 | 08/28/06 | A20 |
| 21 | 08/28/06 | A21 | 22 | 08/28/06 | B1 | 23 | 08/28/06 | B2 | 24 | 08/28/06 | B3 |
| 25 | 08/28/06 | B4 | 26 | 08/28/06 | C1 | 27 | 08/28/06 | C2 | 28 | 08/28/06 | CJ2 |
| 29 | 08/28/06 | D1 | 30 | 08/28/06 | D2 | 31 | 08/28/06 | J1A | 32 | 08/28/06 | J1B |
| 33 | 08/28/06 | P1 | 34 | 08/28/06 | P2 | 35 | 08/28/06 | V1 | 36 | 08/28/06 | V2 |
| 37 | 08/28/06 | V3 | 38 | 08/28/06 | V4 | 39 | 08/28/06 | V5 | | | |

DELETED TRUSSES DUE TO REVISION

A10
A12
A14
A16
A18
A20

(* PLEASE ATTACHED SHEETS FOR REPLACEMENT TRUSSES.)

Truss Design Engineer: Philip J. O'Regan
License # 58126
Address: P.O. Box 280055, Tampa, FL 33682

PHILIP J. O'REGAN
LICENSE
No. 58126
STATE OF
FLORIDA
PROFESSIONAL ENGINEER

Date Sealed: 8/28/2006

| Job | Mark | Quan | Type | Span | P1-H1 | Left OH | Right OH | Engineering |
|---|---|---|---|---|---|---|---|---|
| whitt-bohlmann | A1 | 6 | SP | 460000 | 6 | 2- 0- 0 | 2- 0- 0 | T06082949 |

U# J#whitt-bohlmann BOHLMANN

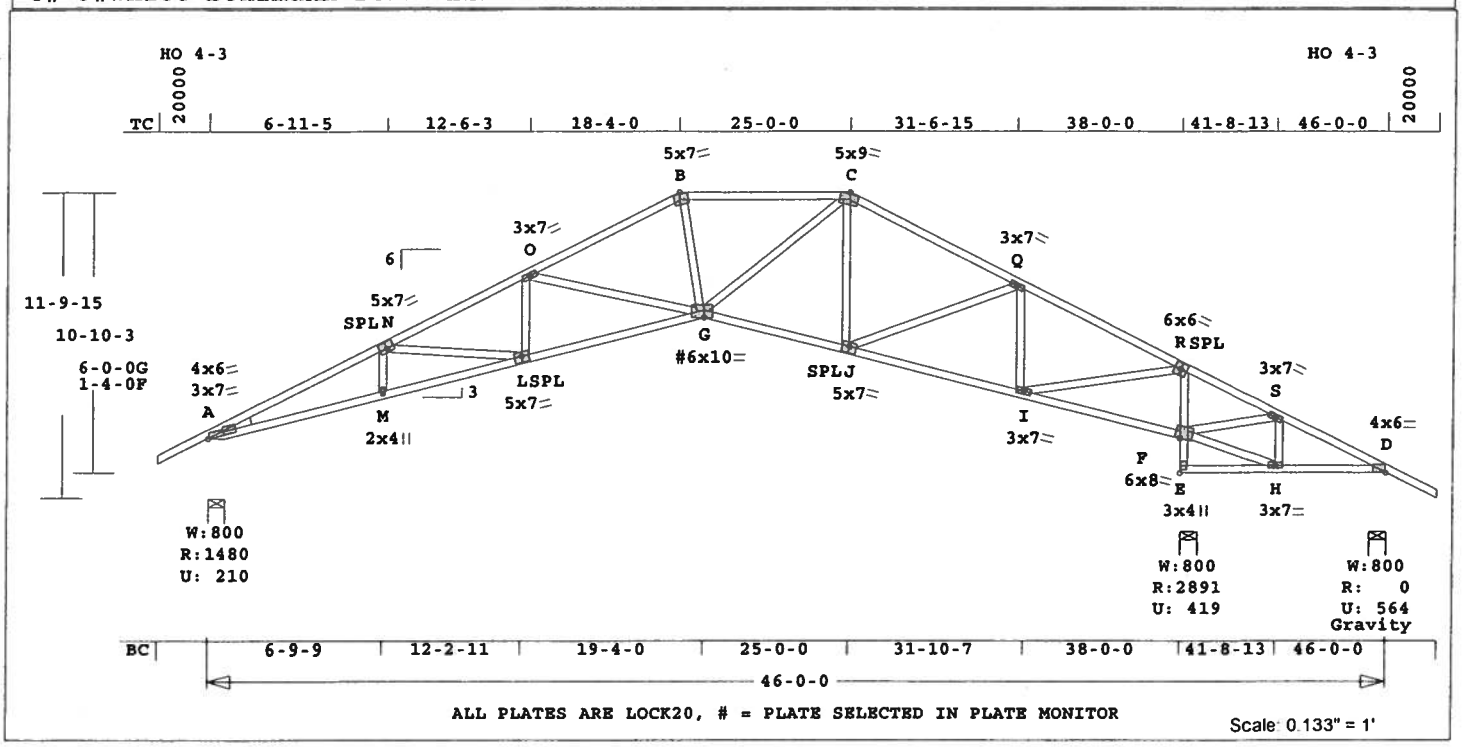


Robbins Engineering, Inc./Online Plus™ APPROX. TRUSS WEIGHT: 316.7 LBS

Online Plus -- Version 19.0.034
RUN DATE: 26-AUG-06

| | CSI | -Size- | ----Lumber---- |
|---|---|---|---|
| TC | 0.79 | 2x 4 | SP-#2 |
| BC | 0.96 | 2x 4 | SP-#2 |
| EX A -L | | 2x 4 | SP-#1 |
| CW | 0.35 | 2x 4 | SP-#2 |
| WB | 0.57 | 2x 4 | SP-#2 |
| PB | --- | 2x 4 | SP-#2 |

Brace truss as follows:

| O.C. | From | To |
|---|---|---|
| TC Cont. | 0- 0- 0 | 18- 4- 0 |
| TC 2- 0- 0 | 18- 4- 0 | 25- 0- 0 |
| TC Cont. | 25- 0- 0 | 46- 0- 0 |
| BC Cont. | 0- 0- 0 | 46- 0- 0 |

| Loading | Live | Dead | (psf) |
|---|---|---|---|
| TC | 20.0 | 10.0 | |
| BC | 0.0 | 10.0 | |
| Total | 20.0 | 20.0 | 40.0 |
| Spacing | | | 24.0" |

Lumber Duration Factor 1.25
Plate Duration Factor 1.25
TC Fb=1.15 Fc=1.10 Ft=1.10
BC Fb=1.10 Fc=1.10 Ft=1.10

Plus 6 Wind Load Case(s)
Plus 1 UBC LL Load Case(s)

| Jt | React Lbs | Uplft Lbs | Size In-Sx | Req'd In-Sx |
|---|---|---|---|---|
| A | 1480 | 210 | 8- 0 | 1-12 |
| | | | Hz = | -217 |
| E | 2892 | 419 | 8- 0 | 3- 4 |
| D | 0 | 564G | 8- 0 | 1- 8 |
| | | | Hz = | 220 |

G = Gravity Uplift

| Membr | CSI | P Lbs | | Axl | CSI | Bnd |
|---|---|---|---|---|---|---|
| ----------Top Chords---------- | | | | | | |
| A -N | 0.79 | 4188 | C | 0.15 | 0.64 | |
| N -O | 0.52 | 3582 | C | 0.17 | 0.35 | |
| O -B | 0.33 | 2561 | C | 0.04 | 0.29 | |
| B -C | 0.45 | 2416 | C | 0.08 | 0.37 | |
| C -Q | 0.44 | 1686 | C | 0.01 | 0.43 | |
| Q -R | 0.43 | 707 | C | 0.00 | 0.43 | |
| R -S | 0.77 | 2736 | T | 0.46 | 0.31 | |
| S -D | 0.43 | 1478 | T | 0.25 | 0.18 | |
| --------Bottom Chords--------- | | | | | | |
| A -M | 0.91 | 3817 | T | 0.50 | 0.41 | |
| M -L | 0.70 | 3839 | T | 0.50 | 0.20 | |
| L -G | 0.96 | 3318 | T | 0.55 | 0.41 | |
| G -J | 0.59 | 1538 | T | 0.26 | 0.33 | |
| J -I | 0.35 | 658 | T | 0.11 | 0.24 | |
| I -F | 0.28 | 2522 | C | 0.04 | 0.24 | |
| E -H | 0.15 | 113 | C | 0.00 | 0.15 | |
| H -D | 0.20 | 1306 | C | 0.01 | 0.19 | |
| ----------Chord-Webs---------- | | | | | | |
| E -F | 0.35 | 2875 | C | 0.06 | 0.29 | |
| F -R | 0.21 | 2361 | C | 0.21 | 0.00 | |
| ----------Webs---------- | | | | | | |
| M -N | 0.02 | 163 | T | | | |
| N -L | 0.19 | 509 | C | | | |
| L -O | 0.05 | 378 | T | | | |
| O -G | 0.57 | 943 | C | | | |
| B -G | 0.14 | 790 | T | | | |
| G -C | 0.21 | 1144 | T | | | |
| J -C | 0.15 | 346 | C | | | |
| J -Q | 0.17 | 921 | T | | | |
| I -Q | 0.28 | 1172 | C | | | |
| I -R | 0.57 | 3121 | T | | | |
| F -S | 0.21 | 1159 | C | | | |
| F -H | 0.26 | 1270 | C | | | |
| H -S | 0.10 | 566 | T | | | |

TL Defl -0.73" in M -L L/615
LL Defl -0.36" in M -L L/999

| Hz Disp | LL | DL | TL |
|---|---|---|---|
| Jt E | 0.20" | 0.20" | 0.41" |

Shear // Grain in A -N 0.29

Plates for each ply each face.
PLATING CONFORMS TO TPI.
REPORT: NER 691
ROBBINS ENGINEERING, INC.
BASED ON SP LUMBER
USING GROSS AREA TEST.
Plate - LOCK 20 Ga, Gross Area
Plate - RHS 20 Ga, Gross Area

| Jt | Type | Plt Size | X | Y | JSI |
|---|---|---|---|---|---|
| A | LOCK | 3.0x 7.0 | 2.4 | 1.4 | 0.74 |
| A | LOCK | 4.0x 6.0 | 6.0 | 2.2 | 0.28 |
| N | LOCK | 5.0x 7.0 | -0.2 | 0.5 | 0.84 |
| O | LOCK | 3.0x 7.0 | Ctr | Ctr | 0.44 |
| B | LOCK | 5.0x 7.0 | 0.8 | -3.2 | 0.73 |
| C | LOCK | 5.0x 9.0 | -0.8 | -3.5 | 0.73 |
| Q | LOCK | 3.0x 7.0 | Ctr | Ctr | 0.44 |
| R | LOCK | 6.0x 6.0 | Ctr | Ctr | 0.95 |
| S | LOCK | 3.0x 7.0 | Ctr | Ctr | 0.44 |
| D | LOCK | 4.0x 6.0 | Ctr | 0.1 | 0.79 |
| M | LOCK | 2.0x 4.0 | Ctr | Ctr | 0.51 |
| L | LOCK | 5.0x 7.0 | 0.1 | -0.5 | 0.85 |
| G# | LOCK | 6.0x10.0 | -1.0 | -0.5 | 0.75 |
| J | LOCK | 5.0x 7.0 | -0.1 | -0.5 | 0.85 |
| I | LOCK | 3.0x 7.0 | Ctr | Ctr | 0.97 |
| F | LOCK | 6.0x 8.0 | 0.2 | 0.8 | 0.73 |
| E | LOCK | 3.0x 4.0 | Ctr | Ctr | 0.76 |
| H | LOCK | 3.0x 7.0 | Ctr | Ctr | 0.53 |

# = Plate Monitor used

REVIEWED BY:
Robbins Engineering, Inc.
PO Box 280055
Tampa, FL 33682

REFER TO ROBBINS ENG. GENERAL NOTES AND SYMBOLS SHEET FOR ADDITIONAL SPECIFICATIONS.

NOTES:
Trusses Manufactured by:
Mayo Truss Co. Inc.
Analysis Conforms To:
FBC2004
OH Loading
Soffit psf 2.0
Design checked for 10 psf non-concurrent LL on BC.
Prevent truss rotation at all bearing locations.
NOTE: USER MODIFIED PLATES
This design may have plates selected through a plate monitor.
Wind Loads - ANSI / ASCE 7-02
Truss is designed as a Main Wind-Force Resistance System.
Wind Speed: 110 mph
Mean Roof Height: 15-0
Exposure Category: B
Occupancy Factor : 1.00
Building Type: Enclosed
Zone location: Exterior
TC Dead Load : 5.0 psf
BC Dead Load : 5.0 psf
User-defined wind-exposed BC regions --From-- ---To---
38- 0- 0 46- 0- 0
Max comp. force 4188 Lbs
Quality Control Factor 1.25

Truss Design Engineer: Philip J. O'Regan
License #: 58126
Address: P.O. Box 280055, Tampa, FL 33682

PHILIP J. O'REGAN
LICENSE
No. 58126
STATE OF
FLORIDA
PROFESSIONAL ENGINEER

Date Sealed: 8/28/2006

| Job | Mark | Quan | Type | Span | Pl-Hl | Left OH | Right OH | Engineering |
|---|---|---|---|---|---|---|---|---|
| Whitt-bohlmann | A2 | 2 | SP | 460000 | 6 | 2- 0- 0 | 2- 0- 0 | T06082949 |

U# J#whitt-bohlmann BOHLMANN

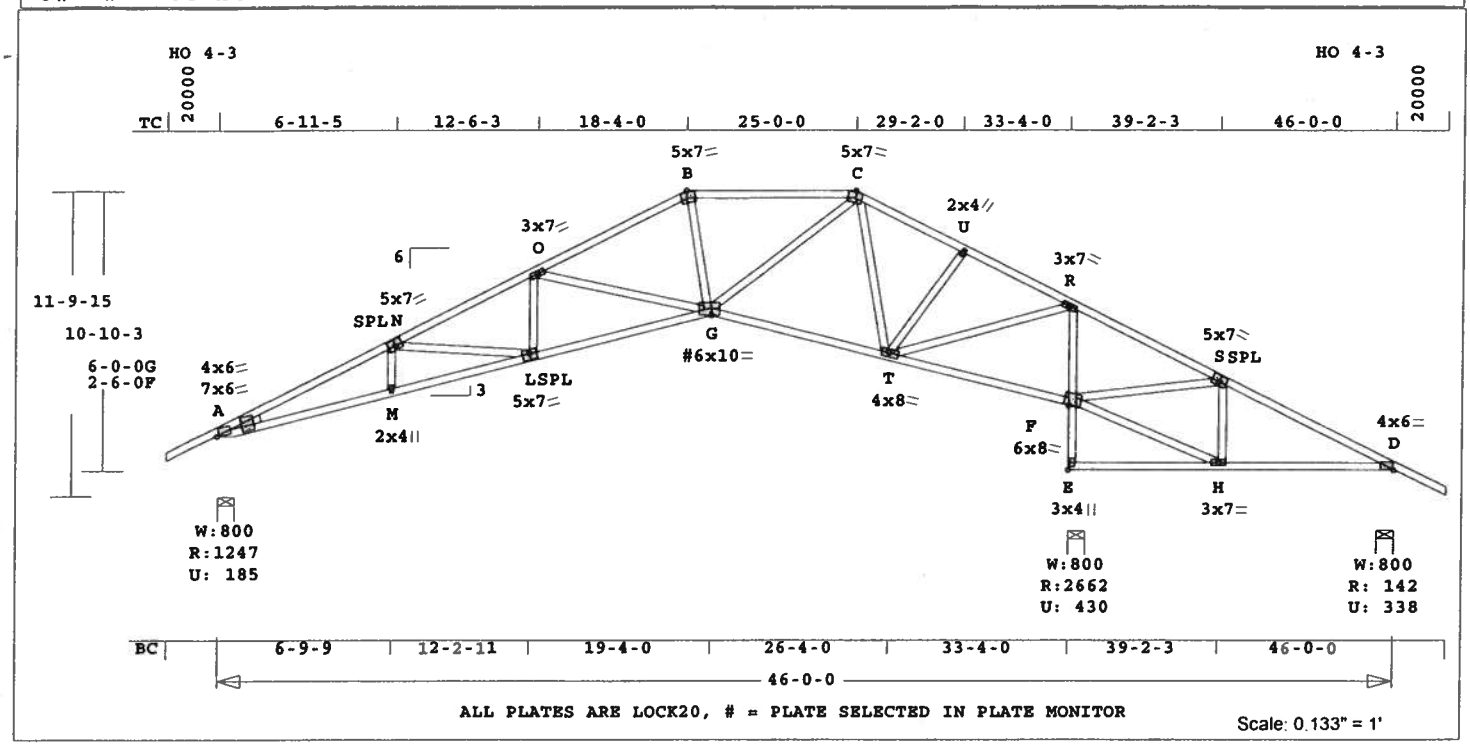


Robbins Engineering, Inc./Online Plus™ APPROX. TRUSS WEIGHT: 323.0 LBS

Online Plus -- Version 19.0.034
RUN DATE: 26-AUG-06

| | CSI | -Size- | ----Lumber---- |
|---|---|---|---|
| TC | 0.78 | 2x 4 | SP-#2 |
| BC | 0.82 | 2x 4 | SP-#2 |
| EX A -L | | 2x 4 | SP-#1 |
| CW | 0.24 | 2x 4 | SP-#2 |
| WB | 0.59 | 2x 4 | SP-#2 |
| PB | --- | 2x 4 | SP-#2 |

Brace truss as follows:

| O.C. | From | To |
|---|---|---|
| TC Cont. | 0- 0- 0 | 18- 4- 0 |
| TC 2- 0- 0 | 18- 4- 0 | 25- 0- 0 |
| TC Cont. | 25- 0- 0 | 46- 0- 0 |
| BC Cont. | 0- 0- 0 | 46- 0- 0 |

| Loading | Live | Dead | (psf) |
|---|---|---|---|
| TC | 20.0 | 10.0 | |
| BC | 0.0 | 10.0 | |
| Total | 20.0 | 20.0 | 40.0 |
| Spacing | | | 24.0" |

Lumber Duration Factor 1.25
Plate Duration Factor 1.25
TC Fb=1.15 Fc=1.10 Ft=1.10
BC Fb=1.10 Fc=1.10 Ft=1.10

Plus 6 Wind Load Case(s)
Plus 1 UBC LL Load Case(s)

| Jt | React Lbs | Uplft Lbs | Size In-Sx | Req'd In-Sx |
|---|---|---|---|---|
| A | 1247 | 186 | 8- 0 | 1- 8 |
| | | | Hz = | -218 |
| E | 2663 | 430 | 8- 0 | 3- 0 |
| D | 143 | 338 | 8- 0 | 1- 8 |
| | | | Hz = | 220 |

| Membr | CSI | P Lbs | Axl-CSI-Bnd |
|---|---|---|---|
| ----------Top Chords---------- | | | |
| A -N | 0.58 | 3320 C | 0.07 0.51 |
| N -O | 0.35 | 2620 C | 0.09 0.26 |
| O -B | 0.31 | 1563 C | 0.01 0.30 |
| B -C | 0.40 | 1450 C | 0.01 0.39 |
| C -U | 0.19 | 354 C | 0.00 0.19 |
| U -R | 0.26 | 507 C | 0.00 0.26 |
| R -S | 0.78 | 2123 T | 0.34 0.44 |
| S -D | 0.57 | 701 T | 0.13 0.44 |
| --------Bottom Chords--------- | | | |
| A -M | 0.69 | 3030 T | 0.39 0.30 |
| M -L | 0.55 | 3045 T | 0.40 0.15 |
| L -G | 0.82 | 2430 T | 0.41 0.41 |
| G -T | 0.39 | 476 T | 0.04 0.35 |
| T -F | 0.36 | 1961 C | 0.01 0.35 |
| E -H | 0.30 | 45 C | 0.00 0.30 |
| H -D | 0.30 | 611 C | 0.00 0.30 |
| ----------Chord-Webs---------- | | | |
| E -F | 0.24 | 2626 C | 0.24 0.00 |
| F -R | 0.23 | 2128 C | 0.22 0.01 |
| ----------Webs---------- | | | |
| M -N | 0.02 | 187 T | |
| N -L | 0.23 | 603 C | |
| L -O | 0.06 | 392 T | |
| O -G | 0.59 | 976 C | |
| B -G | 0.06 | 405 T | |
| G -C | 0.22 | 1203 T | |
| C -T | 0.44 | 880 C | |
| T -U | 0.08 | 242 C | |
| T -R | 0.45 | 2442 T | |
| F -S | 0.56 | 1309 C | |
| F -H | 0.32 | 628 C | |
| H -S | 0.07 | 490 T | |

TL Defl -0.53" in M -L L/741
LL Defl -0.26" in M -L L/999

| Hz Disp | LL | DL | TL |
|---|---|---|---|
| Jt E | 0.13" | 0.13" | 0.26" |

Shear // Grain in A -N 0.27

Plates for each ply each face.
PLATING CONFORMS TO TPI.
REPORT: NER 691
ROBBINS ENGINEERING, INC.
BASED ON SP LUMBER
USING GROSS AREA TEST.
Plate - LOCK 20 Ga, Gross Area
Plate - RHS 20 Ga, Gross Area

| Jt | Type | Plt Size | X | Y | JSI |
|---|---|---|---|---|---|
| A | LOCK | 7.0x 6.0 | 11.5 | 4.5 | 1.00 |
| A | LOCK | 4.0x 6.0 | 0.7 | 1.1 | 0.00 |
| N | LOCK | 5.0x 7.0 | -0.2 | 0.5 | 0.84 |
| O | LOCK | 3.0x 7.0 | Ctr | Ctr | 0.44 |
| B | LOCK | 5.0x 7.0 | 0.8 | -3.2 | 0.73 |
| C | LOCK | 5.0x 7.0 | -0.8 | -3.2 | 0.89 |
| U | LOCK | 2.0x 4.0 | Ctr | Ctr | 0.51 |
| R | LOCK | 3.0x 7.0 | Ctr | Ctr | 0.93 |
| S | LOCK | 5.0x 7.0 | 0.2 | 0.5 | 0.84 |
| D | LOCK | 4.0x 6.0 | Ctr | 0.1 | 0.79 |
| M | LOCK | 2.0x 4.0 | Ctr | Ctr | 0.51 |
| L | LOCK | 5.0x 7.0 | 0.1 | -0.5 | 0.85 |
| G# | LOCK | 6.0x10.0 | -0.9 | -0.5 | 0.76 |
| T | LOCK | 4.0x 8.0 | 0.5 | -0.1 | 0.98 |
| F | LOCK | 6.0x 8.0 | 0.2 | 0.8 | 0.73 |
| E | LOCK | 3.0x 4.0 | Ctr | Ctr | 0.69 |
| H | LOCK | 3.0x 7.0 | Ctr | Ctr | 0.50 |

# = Plate Monitor used

REVIEWED BY:
Robbins Engineering, Inc.
PO Box 280055
Tampa, FL 33682

REFER TO ROBBINS ENG. GENERAL NOTES AND SYMBOLS SHEET FOR ADDITIONAL SPECIFICATIONS.

NOTES:
Trusses Manufactured by:
Mayo Truss Co. Inc.
Analysis Conforms To:
FBC2004
OH Loading
Soffit psf 2.0
Design checked for 10 psf non-concurrent LL on BC.
Prevent truss rotation at all bearing locations.
NOTE: USER MODIFIED PLATES
This design may have plates selected through a plate monitor.
Wind Loads - ANSI / ASCE 7-02
Truss is designed as a Main Wind-Force Resistance System.
Wind Speed: 110 mph
Mean Roof Height: 15-0
Exposure Category: B
Occupancy Factor : 1.00
Building Type: Enclosed
Zone location: Exterior
TC Dead Load : 5.0 psf
BC Dead Load : 5.0 psf
User-defined wind-exposed BC regions --From-- ---To---
33- 4- 0 46- 0- 0
Max comp. force 3320 Lbs
Quality Control Factor 1.25

Truss Design Engineer: Philip J. O'Regan
License #: 58126
Address: P.O. Box 280055, Tampa, FL 33682

PHILIP J. O'REGAN
LICENSE
No. 58126
STATE OF
FLORIDA
PROFESSIONAL ENGINEER

Date Sealed: 8/28/2006

| Job | Mark | Quan | Type | Span | P1-H1 | Left OH | Right OH | Engineering |
|---|---|---|---|---|---|---|---|---|
| whitt-bohlmann | A3 | 1 | SP | 460000 | 6 | 0 | 2- 0- 0 | T06082949 |

U# J#whitt-bohlmann BOHLMANN

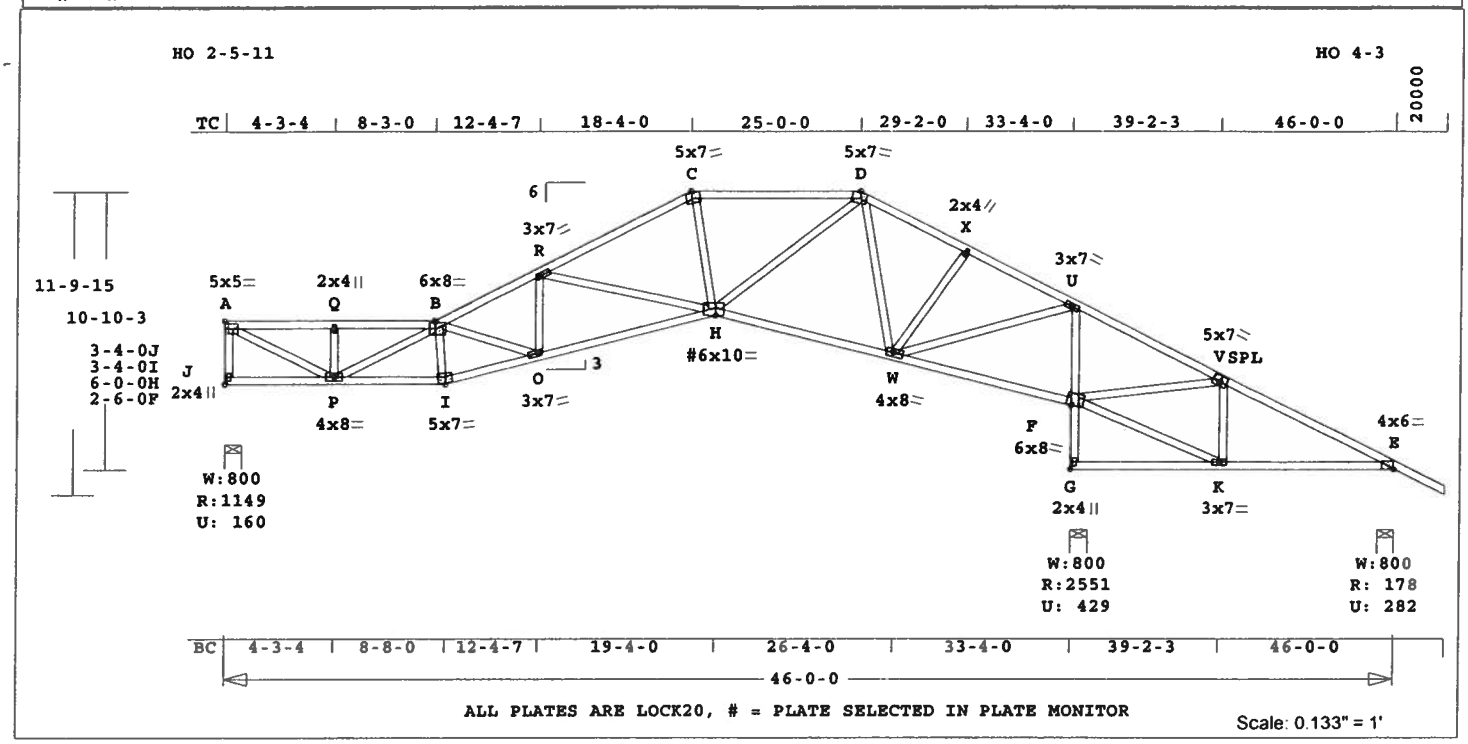


ALL PLATES ARE LOCK20, # = PLATE SELECTED IN PLATE MONITOR

Scale: 0.133" = 1'

Robbins Engineering, Inc./Online Plus™ APPROX. TRUSS WEIGHT: 335.2 LBS

Online Plus -- Version 19.0.034
RUN DATE: 26-AUG-06

| | CSI | -Size- | ----Lumber---- |
|---|---|---|---|
| TC | 0.73 | 2x 4 | SP-#2 |
| BC | 0.85 | 2x 4 | SP-#2 |
| CW | 0.23 | 2x 4 | SP-#2 |
| WB | 0.56 | 2x 4 | SP-#2 |

Brace truss as follows:

| | O.C. | From | To |
|---|---|---|---|
| TC | Cont. | 0- 0- 0 | 18- 4- 0 |
| TC | 2- 0- 0 | 18- 4- 0 | 25- 0- 0 |
| TC | Cont. | 25- 0- 0 | 46- 0- 0 |
| BC | Cont. | 0- 0- 0 | 46- 0- 0 |

| Loading | Live | Dead | (psf) |
|---|---|---|---|
| TC | 20.0 | 10.0 | |
| BC | 0.0 | 10.0 | |
| Total | 20.0 | 20.0 | 40.0 |
| Spacing | | | 24.0" |

Lumber Duration Factor 1.25
Plate Duration Factor 1.25
TC Fb=1.15 Fc=1.10 Ft=1.10
BC Fb=1.10 Fc=1.10 Ft=1.10

Plus 6 Wind Load Case(s)
Plus 1 UBC LL Load Case(s)

| Jt | React Lbs | Uplft Lbs | Size In-Sx | Req'd In-Sx |
|---|---|---|---|---|
| J | 1149 | 161 | 8- 0 | 1- 8 |
| | | | Hz = | -219 |
| G | 2552 | 430 | 8- 0 | 2-14 |
| E | 178 | 282 | 8- 0 | 1- 8 |
| | | | Hz = | 185 |

| Membr | CSI | P Lbs | Axl | CSI-Bnd |
|---|---|---|---|---|
| ----------Top Chords---------- | | | | |
| A -Q | 0.24 | 1905 C | 0.02 | 0.22 |
| Q -B | 0.24 | 1905 C | 0.02 | 0.22 |
| B -R | 0.23 | 2712 C | 0.04 | 0.19 |
| R -C | 0.32 | 1694 C | 0.04 | 0.28 |
| C -D | 0.40 | 1579 C | 0.01 | 0.39 |
| D -X | 0.20 | 509 C | 0.00 | 0.20 |
| X -U | 0.25 | 662 C | 0.00 | 0.25 |
| U -V | 0.73 | 1833 T | 0.29 | 0.44 |
| V -E | 0.54 | 528 T | 0.10 | 0.44 |
| --------Bottom Chords--------- | | | | |
| J -P | 0.10 | 191 T | 0.00 | 0.10 |
| P -I | 0.58 | 3073 T | 0.51 | 0.07 |
| I -O | 0.64 | 3111 T | 0.52 | 0.12 |
| O -H | 0.85 | 2511 T | 0.42 | 0.43 |
| H -W | 0.40 | 604 T | 0.05 | 0.35 |
| W -F | 0.35 | 1693 C | 0.00 | 0.35 |
| G -K | 0.30 | 43 C | 0.00 | 0.30 |
| K -E | 0.30 | 457 C | 0.00 | 0.30 |
| ----------Chord-Webs---------- | | | | |
| G -F | 0.23 | 2515 C | 0.23 | 0.00 |
| F -U | 0.21 | 2033 C | 0.19 | 0.02 |
| ----------Webs---------- | | | | |
| J -A | 0.11 | 1110 C | WindLd | |
| A -P | 0.39 | 2155 T | | |
| P -Q | 0.03 | 323 C | | |
| P -B | 0.34 | 1307 C | | |
| B -I | 0.07 | 654 C | | |
| B -O | 0.13 | 622 C | | |
| O -R | 0.06 | 418 T | | |
| R -H | 0.56 | 930 C | | |
| C -H | 0.07 | 442 T | | |
| H -D | 0.22 | 1208 T | | |
| D -W | 0.40 | 811 C | | |
| W -X | 0.08 | 244 C | | |
| W -U | 0.42 | 2316 T | | |
| F -V | 0.52 | 1203 C | | |
| F -K | 0.23 | 463 C | | |
| K -V | 0.06 | 440 T | | |

TL Defl -0.39" in I -O L/994
LL Defl -0.20" in I -O L/999

| Hz Disp | LL | DL | TL |
|---|---|---|---|
| Jt G | 0.07" | 0.07" | 0.14" |

Shear // Grain in C -D 0.27

Plates for each ply each face.
PLATING CONFORMS TO TPI.
REPORT: NER 691
ROBBINS ENGINEERING, INC.
BASED ON SP LUMBER
USING GROSS AREA TEST.
Plate - LOCK 20 Ga, Gross Area
Plate - RHS 20 Ga, Gross Area

| Jt | Type | Plt Size | X | Y | JSI |
|---|---|---|---|---|---|
| A | LOCK | 5.0x 5.0 | Ctr | Ctr | 0.75 |
| Q | LOCK | 2.0x 4.0 | Ctr | Ctr | 0.51 |
| B | LOCK | 6.0x 8.0 | 1.0 | Ctr | 0.85 |
| R | LOCK | 3.0x 7.0 | Ctr | Ctr | 0.44 |
| C | LOCK | 5.0x 7.0 | 0.8 | -3.2 | 0.73 |
| D | LOCK | 5.0x 7.0 | -0.8 | -3.2 | 0.89 |
| X | LOCK | 2.0x 4.0 | Ctr | Ctr | 0.51 |
| U | LOCK | 3.0x 7.0 | Ctr | Ctr | 0.89 |
| V | LOCK | 5.0x 7.0 | 0.2 | 0.5 | 0.84 |
| E | LOCK | 4.0x 6.0 | Ctr | 0.1 | 0.79 |
| J | LOCK | 2.0x 4.0 | Ctr | Ctr | 0.62 |
| P | LOCK | 4.0x 8.0 | Ctr | Ctr | 0.84 |
| I | LOCK | 5.0x 7.0 | -0.4 | 2.9 | 0.73 |
| O | LOCK | 3.0x 7.0 | Ctr | Ctr | 0.42 |
| H# | LOCK | 6.0x10.0 | -1.1 | -0.5 | 0.75 |
| W | LOCK | 4.0x 8.0 | 0.5 | -0.1 | 0.93 |
| F | LOCK | 6.0x 8.0 | 0.2 | 0.8 | 0.73 |
| G | LOCK | 2.0x 4.0 | Ctr | Ctr | 0.99 |
| K | LOCK | 3.0x 7.0 | Ctr | Ctr | 0.50 |

# = Plate Monitor used

REVIEWED BY:
Robbins Engineering, Inc.

PO Box 280055
Tampa, FL 33682

REFER TO ROBBINS ENG. GENERAL NOTES AND SYMBOLS SHEET FOR ADDITIONAL SPECIFICATIONS.

NOTES:
Trusses Manufactured by:
Mayo Truss Co. Inc.
Analysis Conforms To:
FBC2004
OH Loading
Soffit psf 2.0
Design checked for 10 psf non-concurrent LL on BC.
Prevent truss rotation at all bearing locations.
NOTE: USER MODIFIED PLATES
This design may have plates selected through a plate monitor.
Wind Loads - ANSI / ASCE 7-02
Truss is designed as a Main Wind-Force Resistance System.
Wind Speed: 110 mph
Mean Roof Height: 15-0
Exposure Category: B
Occupancy Factor : 1.00
Building Type: Enclosed
Zone location: Exterior
TC Dead Load : 5.0 psf
BC Dead Load : 5.0 psf
User-defined wind-exposed BC regions --From-- ---To---
33- 4- 0 46- 0- 0

Truss Design Engineer: Philip J. O'Regan
License #: 58126
Address: P.O. Box 280055, Tampa, FL 33682

PHILIP J. O'REGAN LICENSE No. 58126 STATE OF FLORIDA PROFESSIONAL ENGINEER



Date Sealed: 8/28/2006

| Job | Mark | Quan | Type | Span | P1-H1 | Left OH | Right OH | Engineering |
|---|---|---|---|---|---|---|---|---|
| whitt-bohlmann | A3 | 1 | SP | 460000 | 6 | 0 | 2- 0- 0 | T06082949 |

U# J#whitt-bohlmann BOHLMANN

Max comp. force 2712 Lbs
Quality Control Factor 1.25

| Job | Mark | Quan | Type | Span | P1-H1 | Left OH | Right OH | Engineering |
|---|---|---|---|---|---|---|---|---|
| whitt-bohlmann | A4 | 1 | SP | 460000 | 6 | 0 | 2- 0- 0 | T06082949 |

U# J#whitt-bohlmann BOHLMANN

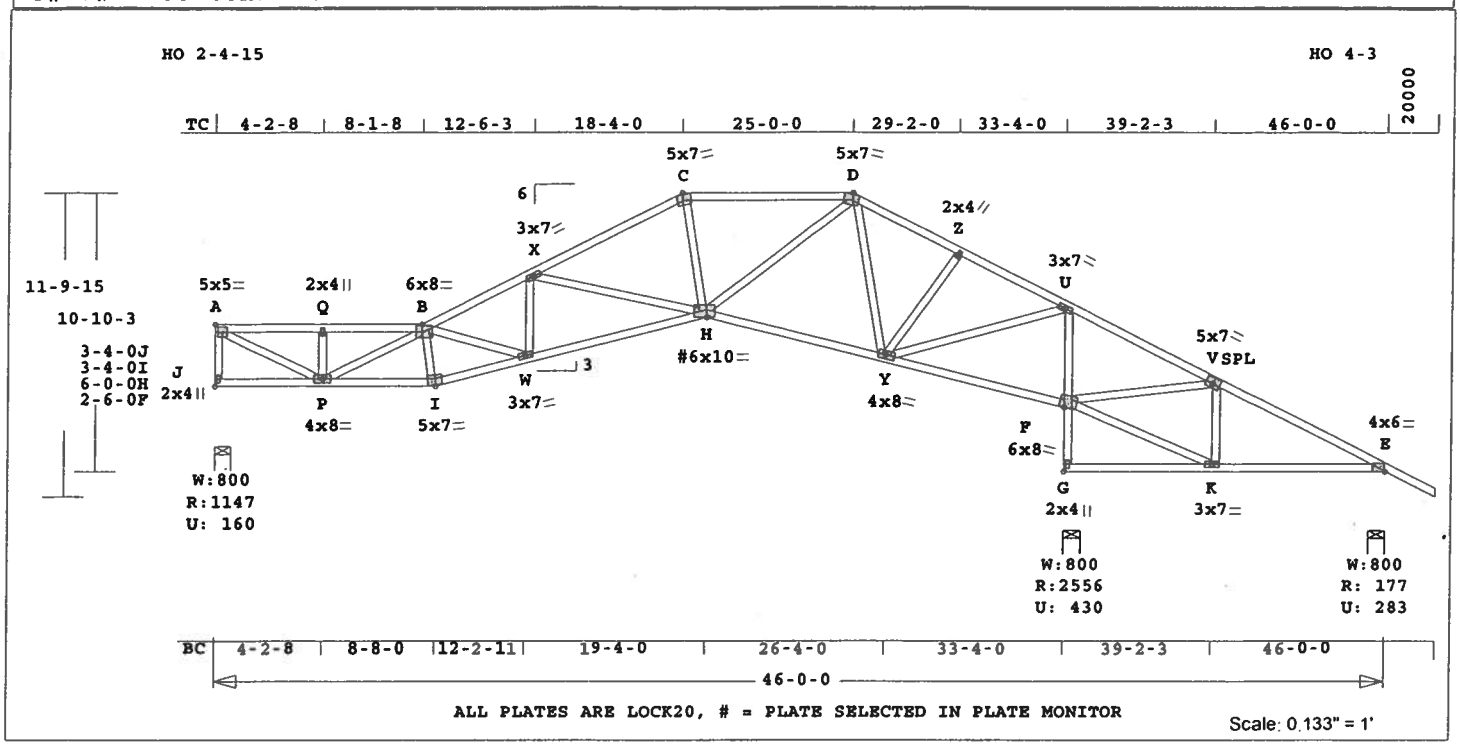


Robbins Engineering, Inc./Online Plus™ APPROX. TRUSS WEIGHT: 334.8 LBS

Online Plus -- Version 19.0.034
RUN DATE: 26-AUG-06

| | CSI | -Size- | ----Lumber---- |
|---|---|---|---|
| TC | 0.73 | 2x 4 | SP-#2 |
| BC | 0.85 | 2x 4 | SP-#2 |
| CW | 0.23 | 2x 4 | SP-#2 |
| WB | 0.56 | 2x 4 | SP-#2 |

Brace truss as follows:

| O.C. | From | To |
|---|---|---|
| TC Cont. | 0- 0- 0 | 18- 4- 0 |
| TC 2- 0- 0 | 18- 4- 0 | 25- 0- 0 |
| TC Cont. | 25- 0- 0 | 46- 0- 0 |
| BC Cont. | 0- 0- 0 | 46- 0- 0 |

| Loading | Live | Dead | (psf) |
|---|---|---|---|
| TC | 20.0 | 10.0 | |
| BC | 0.0 | 10.0 | |
| Total | 20.0 | 20.0 | 40.0 |
| Spacing | | | 24.0" |

Lumber Duration Factor 1.25
Plate Duration Factor 1.25
TC Fb=1.15 Fc=1.10 Ft=1.10
BC Fb=1.10 Fc=1.10 Ft=1.10

Plus 6 Wind Load Case(s)
Plus 1 UBC LL Load Case(s)

| Jt | React Lbs | Uplft Lbs | Size Req'd In-Sx | In-Sx |
|---|---|---|---|---|
| J | 1148 | 161 | 8- 0 | 1- 8 |
| | | | Hz = | -218 |
| G | 2557 | 430 | 8- 0 | 2-14 |
| E | 178 | 284 | 8- 0 | 1- 8 |
| | | | Hz = | 185 |

| Membr | CSI | P Lbs | Axl-CSI-Bnd | |
|---|---|---|---|---|
| ----------Top Chords---------- | | | | |
| A -Q | 0.23 | 1931 C | 0.02 | 0.21 |
| Q -B | 0.24 | 1931 C | 0.02 | 0.22 |
| B -X | 0.24 | 2707 C | 0.04 | 0.20 |
| X -C | 0.32 | 1688 C | 0.04 | 0.28 |
| C -D | 0.40 | 1574 C | 0.01 | 0.39 |
| D -Z | 0.20 | 502 C | 0.00 | 0.20 |
| Z -U | 0.25 | 655 C | 0.00 | 0.25 |
| U -V | 0.73 | 1846 T | 0.29 | 0.44 |
| V -E | 0.54 | 535 T | 0.10 | 0.44 |
| --------Bottom Chords--------- | | | | |
| J -P | 0.10 | 191 T | 0.00 | 0.10 |
| P -I | 0.59 | 3132 T | 0.52 | 0.07 |
| I -W | 0.63 | 3125 T | 0.52 | 0.11 |
| W -H | 0.85 | 2507 T | 0.42 | 0.43 |
| H -Y | 0.40 | 599 T | 0.05 | 0.35 |
| Y -F | 0.35 | 1705 C | 0.00 | 0.35 |
| G -K | 0.30 | 44 C | 0.00 | 0.30 |
| K -E | 0.30 | 464 C | 0.00 | 0.30 |
| ----------Chord-Webs---------- | | | | |
| G -F | 0.23 | 2520 C | 0.23 | 0.00 |
| F -U | 0.22 | 2037 C | 0.20 | 0.02 |
| ----------Webs---------- | | | | |
| J -A | 0.11 | 1109 C | WindLd | |
| A -P | 0.40 | 2178 T | | |
| P -Q | 0.03 | 317 C | | |
| P -B | 0.34 | 1340 C | | |
| B -I | 0.07 | 661 C | | |
| B -W | 0.14 | 635 C | | |
| W -X | 0.06 | 416 T | | |
| X -H | 0.56 | 932 C | | |
| C -H | 0.07 | 440 T | | |
| H -D | 0.22 | 1208 T | | |
| D -Y | 0.41 | 814 C | | |
| Y -Z | 0.08 | 244 C | | |
| Y -U | 0.42 | 2321 T | | |
| F -V | 0.52 | 1208 C | | |
| F -K | 0.24 | 470 C | | |
| K -V | 0.06 | 442 T | | |

TL Defl -0.40" in I -W L/983
LL Defl -0.20" in I -W L/999

| Hz Disp | LL | DL | TL |
|---|---|---|---|
| Jt G | 0.07" | 0.07" | 0.14" |

Shear // Grain in C -D 0.27

Plates for each ply each face.
PLATING CONFORMS TO TPI.
REPORT: NER 691
ROBBINS ENGINEERING, INC.
BASED ON SP LUMBER
USING GROSS AREA TEST.
Plate - LOCK 20 Ga, Gross Area
Plate - RHS 20 Ga, Gross Area

| Jt | Type | Plt Size | X | Y | JSI |
|---|---|---|---|---|---|
| A | LOCK | 5.0x 5.0 | Ctr | Ctr | 0.75 |
| Q | LOCK | 2.0x 4.0 | Ctr | Ctr | 0.51 |
| B | LOCK | 6.0x 8.0 | 1.0 | Ctr | 0.85 |
| X | LOCK | 3.0x 7.0 | Ctr | Ctr | 0.44 |
| C | LOCK | 5.0x 7.0 | 0.8 | -3.2 | 0.73 |
| D | LOCK | 5.0x 7.0 | -0.8 | -3.2 | 0.89 |
| Z | LOCK | 2.0x 4.0 | Ctr | Ctr | 0.51 |
| U | LOCK | 3.0x 7.0 | Ctr | Ctr | 0.89 |
| V | LOCK | 5.0x 7.0 | 0.2 | 0.5 | 0.84 |
| E | LOCK | 4.0x 6.0 | Ctr | 0.1 | 0.79 |
| J | LOCK | 2.0x 4.0 | Ctr | Ctr | 0.62 |
| P | LOCK | 4.0x 8.0 | Ctr | Ctr | 0.85 |
| I | LOCK | 5.0x 7.0 | -0.4 | 2.9 | 0.73 |
| W | LOCK | 3.0x 7.0 | Ctr | Ctr | 0.43 |
| H# | LOCK | 6.0x10.0 | -1.2 | -0.5 | 0.76 |
| Y | LOCK | 4.0x 8.0 | 0.5 | -0.1 | 0.93 |
| F | LOCK | 6.0x 8.0 | 0.2 | 0.8 | 0.73 |
| G | LOCK | 2.0x 4.0 | Ctr | Ctr | 1.00 |
| K | LOCK | 3.0x 7.0 | Ctr | Ctr | 0.50 |

# = Plate Monitor used

REVIEWED BY:
Robbins Engineering, Inc.

PO Box 280055
Tampa, FL 33682

REFER TO ROBBINS ENG. GENERAL NOTES AND SYMBOLS SHEET FOR ADDITIONAL SPECIFICATIONS.

NOTES:
Trusses Manufactured by:
Mayo Truss Co. Inc.
Analysis Conforms To:
FBC2004
OH Loading
Soffit psf 2.0
Design checked for 10 psf non-concurrent LL on BC.
Prevent truss rotation at all bearing locations.
NOTE: USER MODIFIED PLATES
This design may have plates selected through a plate monitor.
Wind Loads - ANSI / ASCE 7-02
Truss is designed as a Main Wind-Force Resistance System.
Wind Speed: 110 mph
Mean Roof Height: 15-0
Exposure Category: B
Occupancy Factor : 1.00
Building Type: Enclosed
Zone location: Exterior
TC Dead Load : 5.0 psf
BC Dead Load : 5.0 psf
User-defined wind-exposed BC regions --From-- ---To---
33- 4- 0 46- 0- 0

Truss Design Engineer: Philip J. O'Regan
License #: 58126
Address: P.O. Box 280055, Tampa, FL 33682

PHILIP J. O'REGAN
LICENSE
No. 58126
STATE OF
FLORIDA
PROFESSIONAL ENGINEER



Date Sealed: 8/28/2006

| Job | Mark | Quan | Type | Span | Pl-Hl | Left OH | Right OH | Engineering |
|---|---|---|---|---|---|---|---|---|
| whitt-bohlmann | A4 | 1 | SP | 460000 | 6 | 0 | 2- 0- 0 | T06082949 |

U# J#whitt-bohlmann BOHLMANN

Max comp. force 2707 Lbs
Quality Control Factor 1.25

| Job | Mark | Quan | Type | Span | P1-H1 | Left OH | Right OH | Engineering |
|---|---|---|---|---|---|---|---|---|
| whitt-bohlmann | A5 | 1 | SP | 460000 | 6 | 0 | 2- 0- 0 | T06082949 |

U# J#whitt-bohlmann BOHLMANN

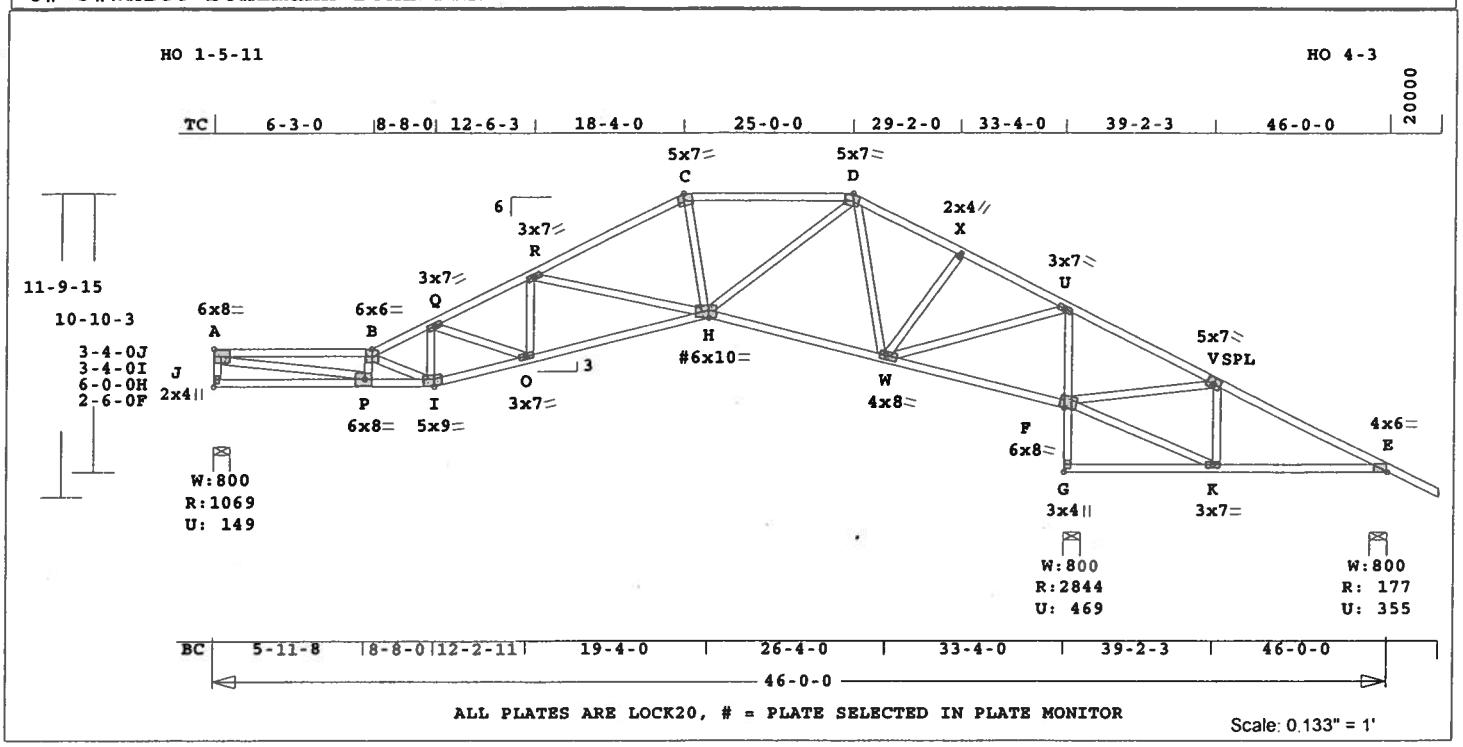


ALL PLATES ARE LOCK20, # = PLATE SELECTED IN PLATE MONITOR

Scale: 0.133" = 1'

Robbins Engineering, Inc./Online Plus™ APPROX. TRUSS WEIGHT: 330.8 LBS

Online Plus -- Version 19.0.034
RUN DATE: 26-AUG-06

| | CSI | -Size- | ----Lumber---- |
|---|---|---|---|
| TC | 0.87 | 2x 4 | SP-#2 |
| BC | 0.93 | 2x 4 | SP-#2 |
| CW | 0.25 | 2x 4 | SP-#2 |
| WB | 0.78 | 2x 4 | SP-#2 |

Brace truss as follows:

| O.C. | From | To |
|---|---|---|
| TC Cont. | 0- 0- 0 | 18- 4- 0 |
| TC 2- 0- 0 | 18- 4- 0 | 25- 0- 0 |
| TC Cont. | 25- 0- 0 | 46- 0- 0 |
| BC Cont. | 0- 0- 0 | 46- 0- 0 |

| Loading | Live | Dead | (psf) |
|---|---|---|---|
| TC | 20.0 | 10.0 | |
| BC | 0.0 | 10.0 | |
| Total | 20.0 | 20.0 | 40.0 |
| Spacing | | | 24.0" |
| Lumber Duration Factor | | | 1.25 |
| Plate Duration Factor | | | 1.25 |
| TC Fb=1.15 | Fc=1.10 | Ft=1.10 | |
| BC Fb=1.10 | Fc=1.10 | Ft=1.10 | |

Plus 6 Wind Load Case(s)
Plus 1 UBC LL Load Case(s)

| Jt | React Lbs | Uplft Lbs | Size Req'd In-Sx | In-Sx |
|---|---|---|---|---|
| J | 1070 | 150 | 8- 0 | 1- 8 |
| | | | Hz = | -206 |
| G | 2845 | 469 | 8- 0 | 3- 3 |
| E | 177 | 355 | 8- 0 | 1- 8 |
| | | | Hz = | 192 |

| Membr | CSI | P Lbs | Axl | CSI-Bnd |
|---|---|---|---|---|
| ----------Top Chords---------- | | | | |
| A -B | 0.72 | 4158 | C | 0.22 0.50 |
| B -Q | 0.39 | 2901 | C | 0.05 0.34 |
| Q -R | 0.24 | 2390 | C | 0.03 0.21 |
| R -C | 0.29 | 1352 | C | 0.02 0.27 |
| C -D | 0.39 | 1247 | C | 0.01 0.38 |
| D -X | 0.19 | 99 | C | 0.00 0.19 |
| X -U | 0.26 | 252 | C | 0.00 0.26 |
| U -V | 0.87 | 2597 | T | 0.42 0.45 |
| V -E | 0.62 | 985 | T | 0.17 0.45 |
| --------Bottom Chords--------- | | | | |
| J -P | 0.30 | 191 | T | 0.00 0.30 |
| P -I | 0.93 | 4240 | T | 0.71 0.22 |
| I -O | 0.51 | 2715 | T | 0.45 0.06 |
| O -H | 0.78 | 2217 | T | 0.37 0.41 |
| H -W | 0.35 | 263 | T | 0.01 0.34 |
| W -F | 0.35 | 2400 | C | 0.01 0.34 |
| G -K | 0.31 | 49 | C | 0.00 0.31 |
| K -E | 0.32 | 864 | C | 0.01 0.31 |
| ----------Chord-Webs---------- | | | | |
| G -F | 0.25 | 2809 | C | 0.25 0.00 |
| F -U | 0.25 | 2280 | C | 0.25 0.00 |
| ----------Webs---------- | | | | |
| J -A | 0.09 | 986 | C | WindLd |
| A -P | 0.78 | 4239 | T | |
| P -B | 0.08 | 875 | C | |
| B -I | 0.20 | 1709 | C | |
| I -Q | 0.02 | 136 | T | |
| Q -O | 0.11 | 523 | C | |
| O -R | 0.06 | 425 | T | |
| R -H | 0.58 | 953 | C | |
| C -H | 0.04 | 323 | T | |
| H -D | 0.22 | 1207 | T | |
| D -W | 0.50 | 996 | C | |
| W -X | 0.08 | 242 | C | |
| W -U | 0.48 | 2646 | T | |
| F -V | 0.64 | 1483 | C | |
| F -K | 0.45 | 897 | C | |
| K -V | 0.09 | 576 | T | |

TL Defl -0.62" in I -O L/629
LL Defl -0.31" in I -O L/999

| Hz Disp | LL | DL | TL |
|---|---|---|---|
| Jt G | 0.06" | 0.06" | 0.12" |

Shear // Grain in C -D 0.27

Plates for each ply each face.
PLATING CONFORMS TO TPI.
REPORT: NER 691
ROBBINS ENGINEERING, INC.
BASED ON SP LUMBER
USING GROSS AREA TEST.
Plate - LOCK 20 Ga, Gross Area
Plate - RHS 20 Ga, Gross Area

| Jt | Type | Plt Size | X | Y | JSI |
|---|---|---|---|---|---|
| A | LOCK | 6.0x 8.0 | 0.5 | Ctr | 0.92 |
| B | LOCK | 6.0x 6.0 | Ctr | Ctr | 0.85 |
| Q | LOCK | 3.0x 7.0 | Ctr | Ctr | 0.44 |
| R | LOCK | 3.0x 7.0 | Ctr | Ctr | 0.44 |
| C | LOCK | 5.0x 7.0 | 0.8 | -3.2 | 0.73 |
| D | LOCK | 5.0x 7.0 | -0.8 | -3.2 | 0.89 |
| X | LOCK | 2.0x 4.0 | Ctr | Ctr | 0.51 |
| U | LOCK | 3.0x 7.0 | Ctr | Ctr | 1.00 |
| V | LOCK | 5.0x 7.0 | 0.2 | 0.5 | 0.84 |
| E | LOCK | 4.0x 6.0 | Ctr | 0.1 | 0.79 |
| J | LOCK | 2.0x 4.0 | Ctr | Ctr | 0.62 |
| P | LOCK | 6.0x 8.0 | -0.5 | Ctr | 0.92 |
| I | LOCK | 5.0x 9.0 | -0.9 | 3.0 | 0.87 |
| O | LOCK | 3.0x 7.0 | Ctr | Ctr | 0.43 |
| H# | LOCK | 6.0x10.0 | -1.3 | -0.5 | 0.76 |
| W | LOCK | 4.0x 8.0 | 1.0 | -0.2 | 0.86 |
| F | LOCK | 6.0x 8.0 | 0.2 | 0.8 | 0.73 |
| G | LOCK | 3.0x 4.0 | Ctr | Ctr | 0.74 |
| K | LOCK | 3.0x 7.0 | Ctr | Ctr | 0.50 |

# = Plate Monitor used

REVIEWED BY:
Robbins Engineering, Inc.
PO Box 280055
Tampa, FL 33682

REFER TO ROBBINS ENG. GENERAL NOTES AND SYMBOLS SHEET FOR ADDITIONAL SPECIFICATIONS.

NOTES:
Trusses Manufactured by:
Mayo Truss Co. Inc.
Analysis Conforms To:
FBC2004
OH Loading
Soffit psf 2.0
Design checked for 10 psf non-concurrent LL on BC.
Prevent truss rotation at all bearing locations.
NOTE: USER MODIFIED PLATES
This design may have plates selected through a plate monitor.
Wind Loads - ANSI / ASCE 7-02
Truss is designed as a Main Wind-Force Resistance System.
Wind Speed: 110 mph
Mean Roof Height: 15-0
Exposure Category: B
Occupancy Factor : 1.00
Building Type: Enclosed
Zone location: Exterior
TC Dead Load : 5.0 psf
BC Dead Load : 5.0 psf
User-defined wind-exposed BC regions --From-- ---To---
33- 4- 0 46- 0- 0

Truss Design Engineer: Philip J. O'Regan
License #: 58126
Address: P.O. Box 280055, Tampa, FL 33682

PHILIP J. O'REGAN
LICENSE
No. 58126
STATE OF FLORIDA
PROFESSIONAL ENGINEER

Date Sealed: 8/28/2006

| Job | Mark | Quan | Type | Span | P1-H1 | Left OH | Right OH | Engineering |
|---|---|---|---|---|---|---|---|---|
| whitt-bohlmann | A5 | 1 | SP | 460000 | 6 | 0 | 2- 0- 0 | T06082949 |

U# J#whitt-bohlmann BOHLMANN

Max comp. force 4158 Lbs
Quality Control Factor 1.25

| Job | Mark | Quan | Type | Span | P1-H1 | Left OH | Right OH | Engineering |
|---|---|---|---|---|---|---|---|---|
| whitt-bohlmann | A6 | 1 | SP | 460000 | 6 | 0 | 2- 0- 0 | T06082949 |

U# J#whitt-bohlmann BOHLMANN

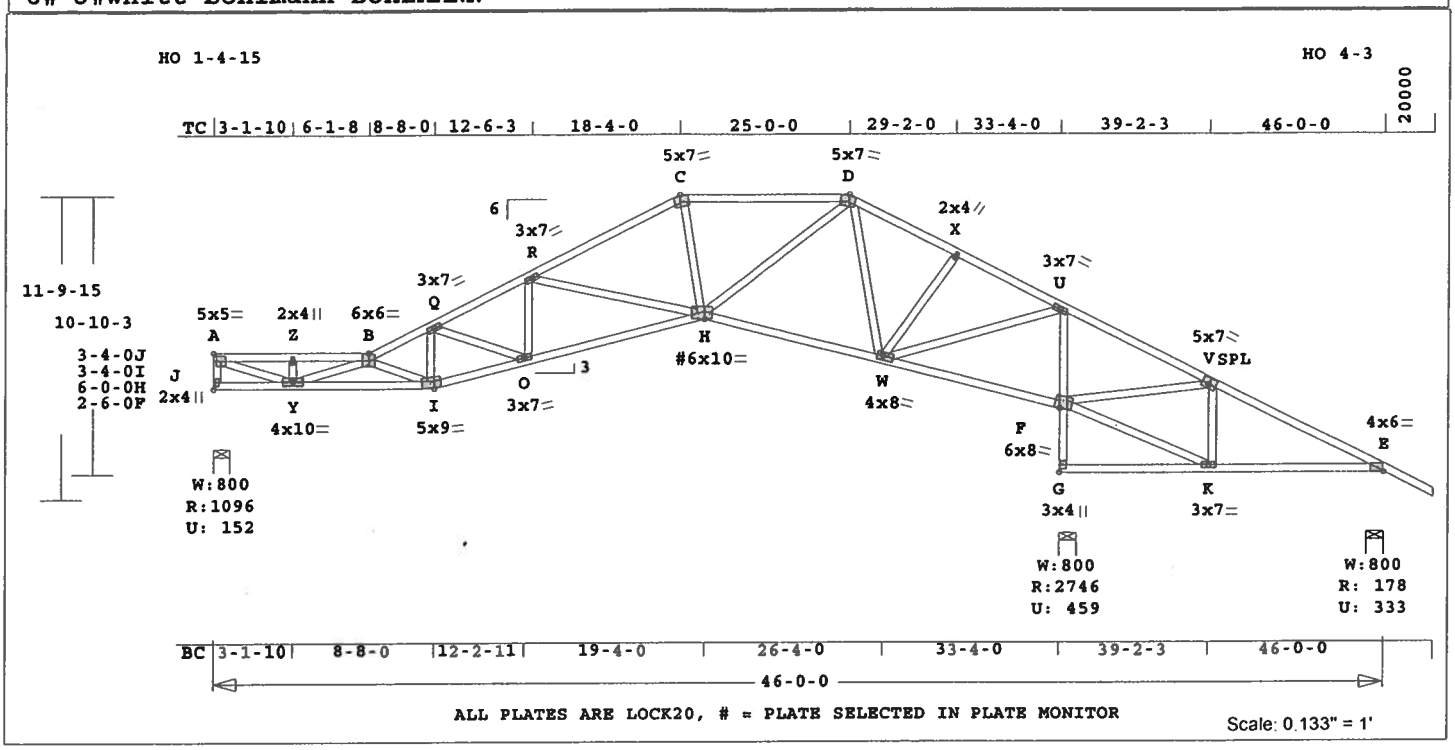


ALL PLATES ARE LOCK20, # = PLATE SELECTED IN PLATE MONITOR

Scale: 0.133" = 1'

Robbins Engineering, Inc./Online Plus™ APPROX. TRUSS WEIGHT: 330.9 LBS

Online Plus -- Version 19.0.034
RUN DATE: 26-AUG-06

| | CSI | -Size- | ----Lumber---- |
|---|---|---|---|
| TC | 0.82 | 2x 4 | SP-#2 |
| BC | 0.80 | 2x 4 | SP-#2 |
| EX J -I | | 2x 4 | SP-#1 |
| CW | 0.25 | 2x 4 | SP-#2 |
| WB | 0.60 | 2x 4 | SP-#2 |

Brace truss as follows:

| O.C. | From | To |
|---|---|---|
| TC Cont. | 0- 0- 0 | 18- 4- 0 |
| TC 2- 0- 0 | 18- 4- 0 | 25- 0- 0 |
| TC Cont. | 25- 0- 0 | 46- 0- 0 |
| BC Cont. | 0- 0- 0 | 46- 0- 0 |

| Loading | Live | Dead | (psf) |
|---|---|---|---|
| TC | 20.0 | 10.0 | |
| BC | 0.0 | 10.0 | |
| Total | 20.0 | 20.0 | 40.0 |
| Spacing | | | 24.0" |

Lumber Duration Factor 1.25
Plate Duration Factor 1.25
TC Fb=1.15 Fc=1.10 Ft=1.10
BC Fb=1.10 Fc=1.10 Ft=1.10

Plus 6 Wind Load Case(s)
Plus 1 UBC LL Load Case(s)

| Jt | React Lbs | Uplft Lbs | Size In-Sx | Req'd In-Sx |
|---|---|---|---|---|
| J | 1097 | 153 | 8- 0 | 1- 8 |
| | | | Hz = | -205 |
| G | 2746 | 460 | 8- 0 | 3- 2 |
| E | 179 | 334 | 8- 0 | 1- 8 |
| | | | Hz = | 193 |

| Membr | CSI | P Lbs | Axl | CSI-Bnd |
|---|---|---|---|---|
| ----------Top Chords---------- | | | | |
| A -Z | 0.13 | 2527 C | 0.04 | 0.09 |
| Z -B | 0.16 | 2527 C | 0.04 | 0.12 |
| B -Q | 0.24 | 3001 C | 0.06 | 0.18 |
| Q -R | 0.25 | 2504 C | 0.04 | 0.21 |
| R -C | 0.30 | 1466 C | 0.03 | 0.27 |
| C -D | 0.39 | 1359 C | 0.01 | 0.38 |
| D -X | 0.19 | 238 C | 0.00 | 0.19 |
| X -U | 0.26 | 390 C | 0.00 | 0.26 |
| U -V | 0.82 | 2340 T | 0.37 | 0.45 |
| V -E | 0.60 | 831 T | 0.15 | 0.45 |
| --------Bottom Chords-------- | | | | |
| J -Y | 0.13 | 191 T | 0.00 | 0.13 |
| Y -I | 0.83 | 4838 T | 0.63 | 0.20 |
| I -O | 0.57 | 2788 T | 0.46 | 0.11 |
| O -H | 0.80 | 2323 T | 0.39 | 0.41 |
| H -W | 0.38 | 379 T | 0.03 | 0.35 |
| W -F | 0.36 | 2162 C | 0.01 | 0.35 |
| G -K | 0.30 | 47 C | 0.00 | 0.30 |
| K -E | 0.30 | 727 C | 0.00 | 0.30 |
| ----------Chord-Webs---------- | | | | |
| G -F | 0.25 | 2710 C | 0.25 | 0.00 |
| F -U | 0.24 | 2198 C | 0.23 | 0.01 |
| ----------Webs---------- | | | | |
| J -A | 0.09 | 1034 C | WindLd | |
| A -Y | 0.49 | 2699 T | | |
| Y -Z | 0.01 | 208 C | | |
| Y -B | 0.36 | 2423 C | | |
| B -I | 0.27 | 2240 C | | |
| I -Q | 0.02 | 188 T | | |
| Q -O | 0.10 | 483 C | | |
| O -R | 0.06 | 417 T | | |
| R -H | 0.58 | 954 C | | |
| C -H | 0.05 | 369 T | | |
| H -D | 0.22 | 1207 T | | |
| D -W | 0.47 | 934 C | | |
| W -X | 0.08 | 243 C | | |
| W -U | 0.46 | 2535 T | | |
| F -V | 0.60 | 1388 C | | |
| F -K | 0.38 | 751 C | | |
| K -V | 0.08 | 524 T | | |

TL Defl -0.56" in I -O L/695
LL Defl -0.28" in I -O L/999

| Hz Disp | LL | DL | TL |
|---|---|---|---|
| Jt G | 0.07" | 0.07" | 0.14" |

Shear // Grain in C -D 0.27

Plates for each ply each face.
PLATING CONFORMS TO TPI.
REPORT: NER 691
ROBBINS ENGINEERING, INC.
BASED ON SP LUMBER
USING GROSS AREA TEST.
Plate - LOCK 20 Ga, Gross Area
Plate - RHS 20 Ga, Gross Area

| Jt | Type | Plt Size | X | Y | JSI |
|---|---|---|---|---|---|
| A | LOCK | 5.0x 5.0 | Ctr | Ctr | 0.82 |
| Z | LOCK | 2.0x 4.0 | Ctr | Ctr | 0.51 |
| B | LOCK | 6.0x 6.0 | Ctr | Ctr | 0.85 |
| Q | LOCK | 3.0x 7.0 | Ctr | Ctr | 0.44 |
| R | LOCK | 3.0x 7.0 | Ctr | Ctr | 0.44 |
| C | LOCK | 5.0x 7.0 | 0.8-3.2 | | 0.73 |
| D | LOCK | 5.0x 7.0 | -0.8-3.2 | | 0.89 |
| X | LOCK | 2.0x 4.0 | Ctr | Ctr | 0.51 |
| U | LOCK | 3.0x 7.0 | Ctr | Ctr | 0.96 |
| V | LOCK | 5.0x 7.0 | 0.2 | 0.5 | 0.84 |
| E | LOCK | 4.0x 6.0 | Ctr | 0.1 | 0.79 |
| J | LOCK | 2.0x 4.0 | Ctr | Ctr | 0.62 |
| Y | LOCK | 4.0x10.0 | Ctr | Ctr | 0.74 |
| I | LOCK | 5.0x 9.0 | -1.4 | 3.0 | 0.90 |
| O | LOCK | 3.0x 7.0 | Ctr | Ctr | 0.43 |
| H# | LOCK | 6.0x10.0 | -1.5 | -0.5 | 0.76 |
| W | LOCK | 4.0x 8.0 | 1.0 | -0.2 | 0.83 |
| F | LOCK | 6.0x 8.0 | 0.2 | 0.8 | 0.73 |
| G | LOCK | 3.0x 4.0 | Ctr | Ctr | 0.71 |
| K | LOCK | 3.0x 7.0 | Ctr | Ctr | 0.50 |

# = Plate Monitor used

REVIEWED BY:
Robbins Engineering, Inc.
PO Box 280055
Tampa, FL 33682

REFER TO ROBBINS ENG. GENERAL NOTES AND SYMBOLS SHEET FOR ADDITIONAL SPECIFICATIONS.

NOTES:
Trusses Manufactured by:
Mayo Truss Co. Inc.
Analysis Conforms To:
FBC2004
OH Loading
Soffit psf 2.0
Design checked for 10 psf non-concurrent LL on BC.
Prevent truss rotation at all bearing locations.
NOTE: USER MODIFIED PLATES
This design may have plates selected through a plate monitor.
Wind Loads - ANSI / ASCE 7-02
Truss is designed as a Main Wind-Force Resistance System.
Wind Speed: 110 mph
Mean Roof Height: 15-0
Exposure Category: B
Occupancy Factor : 1.00
Building Type: Enclosed
Zone location: Exterior
TC Dead Load : 5.0 psf

Truss Design Engineer: Philip J. O'Regan
License #: 58126
Address: P.O. Box 280055, Tampa, FL 33682

Date Sealed: 8/28/2006

| Job | Mark | Quan | Type | Span | P1-H1 | Left OH | Right OH | Engineering |
|---|---|---|---|---|---|---|---|---|
| whitt-bohlmann | A6 | 1 | SP | 460000 | 6 | 0 | 2- 0- 0 | T06082949 |

U# J#whitt-bohlmann BOHLMANN

```
  BC Dead Load :        5.0 psf
User-defined wind-exposed BC
  regions  --From--   ---To---
           33- 4- 0   46- 0- 0
Max comp. force     3001 Lbs
Quality Control Factor 1.25
```

| Job | Mark | Quan | Type | Span | P1-H1 | Left OH | Right OH | Engineering |
|---|---|---|---|---|---|---|---|---|
| whitt-bohlmann | A7 | 1 | SP | 460000 | 6 | 2- 0- 0 | 2- 0- 0 | T06082949 |

U# J#whitt-bohlmann BOHLMANN

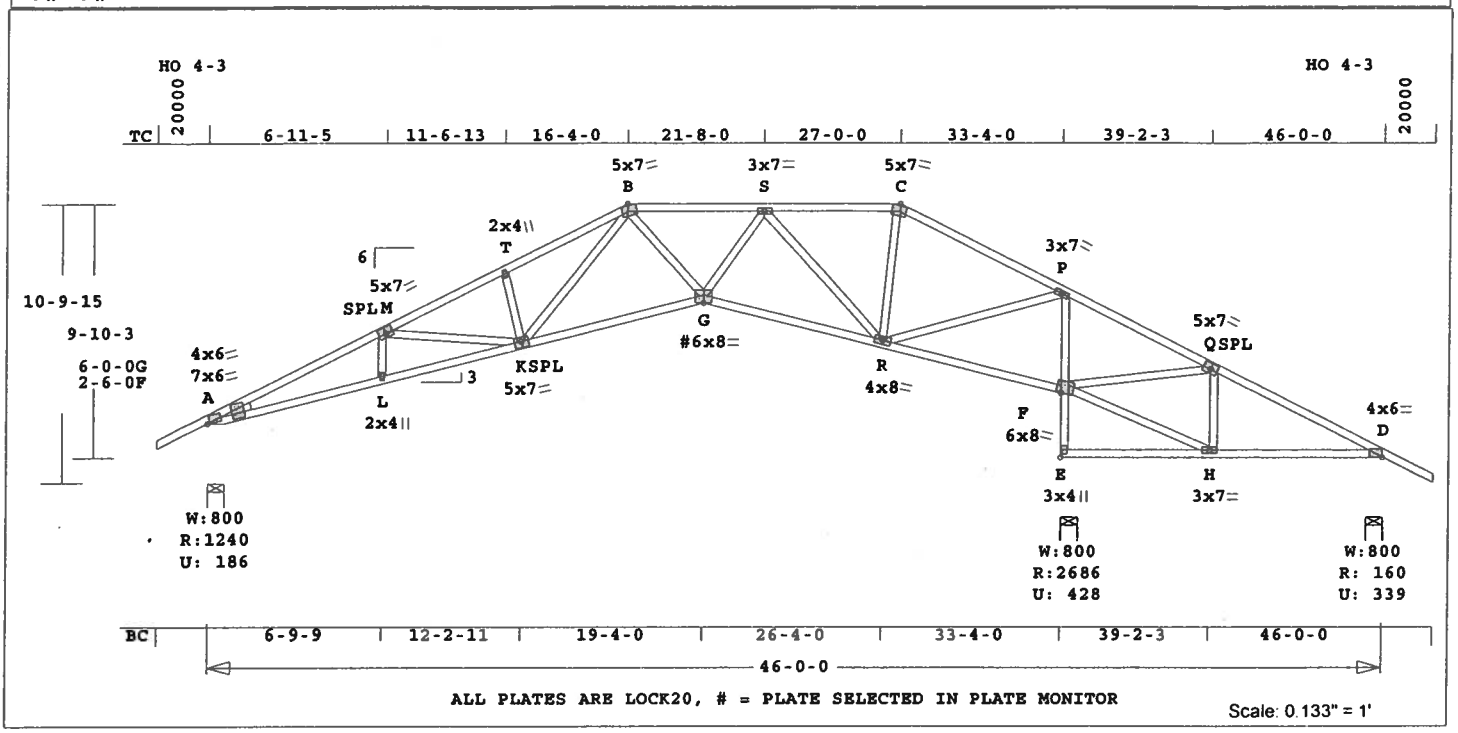


Robbins Engineering, Inc./Online Plus™ APPROX. TRUSS WEIGHT: 316.4 LBS

Online Plus -- Version 19.0.034
RUN DATE: 26-AUG-06

| | CSI | -Size- | ----Lumber---- |
|---|---|---|---|
| TC | 0.78 | 2x 4 | SP-#2 |
| BC | 0.44 | 2x 4 | SP-#2 |
| EX A -K | | 2x 4 | SP-#1 |
| CW | 0.25 | 2x 4 | SP-#2 |
| WB | 0.91 | 2x 4 | SP-#2 |
| PB | --- | 2x 4 | SP-#2 |

Brace truss as follows:

| O.C. | From | To |
|---|---|---|
| TC Cont. | 0- 0- 0 | 46- 0- 0 |
| BC Cont. | 0- 0- 0 | 46- 0- 0 |

| Loading | Live | Dead | (psf) |
|---|---|---|---|
| TC | 20.0 | 10.0 | |
| BC | 0.0 | 10.0 | |
| Total | 20.0 | 20.0 | 40.0 |
| Spacing | | | 24.0" |

Lumber Duration Factor 1.25
Plate Duration Factor 1.25
TC Fb=1.15 Fc=1.10 Ft=1.10
BC Fb=1.10 Fc=1.10 Ft=1.10

Plus 6 Wind Load Case(s)
Plus 1 UBC LL Load Case(s)

| Jt | React Lbs | Uplft Lbs | Size In-Sx | Req'd In-Sx |
|---|---|---|---|---|
| A | 1241 | 186 | 8- 0 | 1- 8 |
| | | | Hz = | -195 |
| E | 2686 | 429 | 8- 0 | 3- 0 |
| D | 161 | 340 | 8- 0 | 1- 8 |
| | | | Hz = | 198 |

| Membr | CSI | P Lbs | Axl | CSI-Bnd |
|---|---|---|---|---|
| ----------Top Chords---------- | | | | |
| A -M | 0.57 | 3281 | C | 0.07 0.50 |
| M -T | 0.26 | 2642 | C | 0.07 0.19 |
| T -B | 0.22 | 2565 | C | 0.04 0.18 |
| B -S | 0.29 | 1804 | C | 0.02 0.27 |
| S -C | 0.27 | 295 | C | 0.00 0.27 |
| C -P | 0.41 | 362 | C | 0.00 0.41 |
| P -Q | 0.78 | 2166 | T | 0.37 0.41 |
| Q -D | 0.54 | 742 | T | 0.13 0.41 |
| --------Bottom Chords--------- | | | | |
| A -L | 0.68 | 2993 | T | 0.39 0.29 |
| L -K | 0.52 | 3010 | T | 0.39 0.13 |
| K -G | 0.44 | 1756 | T | 0.29 0.15 |
| G -R | 0.41 | 1306 | T | 0.12 0.29 |
| R -F | 0.30 | 1995 | C | 0.01 0.29 |
| E -H | 0.30 | 48 | C | 0.00 0.30 |
| H -D | 0.30 | 651 | C | 0.00 0.30 |
| ----------Chord-Webs---------- | | | | |
| E -F | 0.24 | 2650 | C | 0.05 0.19 |
| F -P | 0.25 | 2153 | C | 0.22 0.03 |
| ----------Webs---------- | | | | |
| L -M | 0.02 | 177 | T | |
| M -K | 0.20 | 550 | C | |
| T -K | 0.03 | 264 | C | |
| K -B | 0.17 | 957 | T | |
| B -G | 0.02 | 186 | T | |
| G -S | 0.17 | 936 | T | |
| S -R | 0.91 | 1480 | C | |
| R -C | 0.06 | 173 | C | |
| R -P | 0.43 | 2338 | T | |
| F -Q | 0.56 | 1303 | C | |
| F -H | 0.34 | 666 | C | |
| H -Q | 0.08 | 500 | T | |

TL Defl -0.48" in L -K L/811
LL Defl -0.24" in L -K L/999

| Hz Disp | LL | DL | TL |
|---|---|---|---|
| Jt E | 0.12" | 0.12" | 0.25" |

Shear // Grain in A -M 0.28

Plates for each ply each face.
PLATING CONFORMS TO TPI.
REPORT: NER 691
ROBBINS ENGINEERING, INC.
BASED ON SP LUMBER
USING GROSS AREA TEST.
Plate - LOCK 20 Ga, Gross Area
Plate - RHS 20 Ga, Gross Area

| Jt | Type | Plt Size | X | Y | JSI |
|---|---|---|---|---|---|
| A | LOCK | 7.0x 6.0 | 11.5 | 4.5 | 1.00 |
| A | LOCK | 4.0x 6.0 | 0.7 | 1.1 | 0.00 |
| M | LOCK | 5.0x 7.0 | -0.2 | 0.5 | 0.84 |
| T | LOCK | 2.0x 4.0 | Ctr | Ctr | 0.51 |
| B | LOCK | 5.0x 7.0 | 0.8 | -3.2 | 0.80 |
| S | LOCK | 3.0x 7.0 | 0.3 | Ctr | 0.52 |
| C | LOCK | 5.0x 7.0 | -0.8 | -3.2 | 0.73 |
| P | LOCK | 3.0x 7.0 | Ctr | Ctr | 0.94 |
| Q | LOCK | 5.0x 7.0 | 0.2 | 0.5 | 0.84 |
| D | LOCK | 4.0x 6.0 | Ctr | 0.1 | 0.79 |
| L | LOCK | 2.0x 4.0 | Ctr | Ctr | 0.51 |
| K | LOCK | 5.0x 7.0 | 0.1 | -0.5 | 0.85 |
| G# | LOCK | 6.0x 8.0 | Ctr | -0.5 | 0.75 |
| R | LOCK | 4.0x 8.0 | Ctr | Ctr | 0.87 |
| F | LOCK | 6.0x 8.0 | 0.2 | 0.8 | 0.73 |
| E | LOCK | 3.0x 4.0 | Ctr | Ctr | 0.70 |
| H | LOCK | 3.0x 7.0 | Ctr | Ctr | 0.50 |

# = Plate Monitor used

REVIEWED BY:
Robbins Engineering, Inc.
PO Box 280055
Tampa, FL 33682

REFER TO ROBBINS ENG. GENERAL NOTES AND SYMBOLS SHEET FOR ADDITIONAL SPECIFICATIONS.

NOTES:
Trusses Manufactured by:
Mayo Truss Co. Inc.
Analysis Conforms To:
FBC2004
OH Loading
Soffit psf 2.0
Design checked for 10 psf non-concurrent LL on BC.
Prevent truss rotation at all bearing locations.
NOTE: USER MODIFIED PLATES
This design may have plates selected through a plate monitor.
Wind Loads - ANSI / ASCE 7-02
Truss is designed as a Main Wind-Force Resistance System.
Wind Speed: 110 mph
Mean Roof Height: 15-0
Exposure Category: B
Occupancy Factor : 1.00
Building Type: Enclosed
Zone location: Exterior
TC Dead Load : 5.0 psf
BC Dead Load : 5.0 psf
User-defined wind-exposed BC regions --From-- ---To---
33- 4- 0 46- 0- 0
Max comp. force 3281 Lbs
Quality Control Factor 1.25

Truss Design Engineer: Philip J. O'Regan
License #: 58126
Address: P.O. Box 280055, Tampa, FL 33682

PHILIP J. O'REGAN
LICENSE
No. 58126
STATE OF
FLORIDA
PROFESSIONAL ENGINEER

Date Sealed: 8/28/2006

| Job | Mark | Quan | Type | Span | P1-H1 | Left OH | Right OH | Engineering |
|---|---|---|---|---|---|---|---|---|
| whitt-bohlmann | A8 | 1 | HIPP | 290800 | 6 | 0 | 2- 0- 0 | T06082949 |

U# J#whitt-bohlmann BOHLMANN

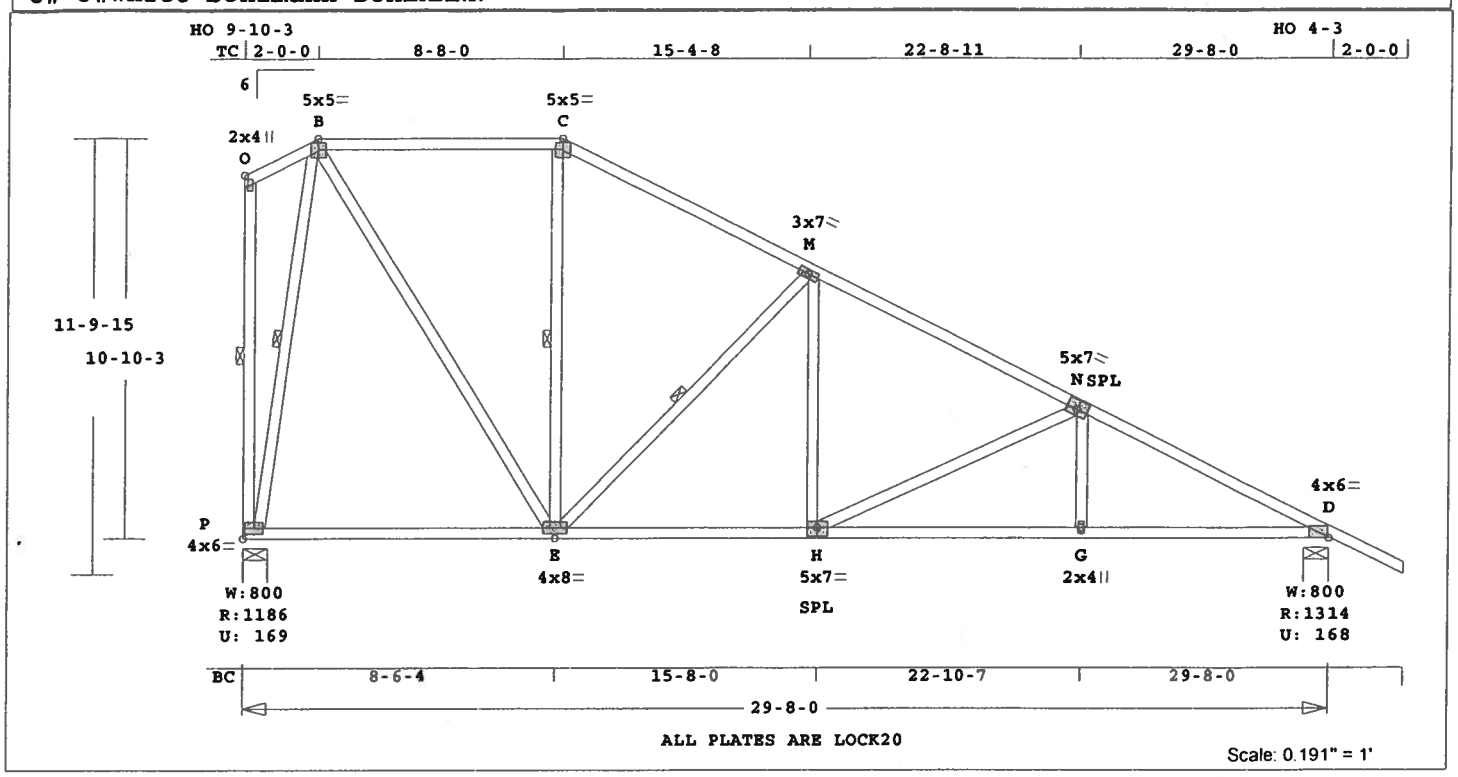


Robbins Engineering, Inc./Online Plus™ APPROX. TRUSS WEIGHT: 253.3 LBS

Online Plus -- Version 19.0.034
RUN DATE: 26-AUG-06

| | CSI | -Size- | ----Lumber---- |
|---|---|---|---|
| TC | 0.51 | 2x 4 | SP-#2 |
| BC | 0.54 | 2x 4 | SP-#2 |
| WB | 0.52 | 2x 4 | SP-#2 |

Brace truss as follows:

| O.C. | From | To |
|---|---|---|
| TC Cont. | 0- 0- 0 | 29- 8- 0 |
| BC Cont. | 0- 0- 0 | 29- 8- 0 |

WB 1 rows CLB on P -O
WB 1 rows CLB on P -B
WB 1 rows CLB on E -C
WB 1 rows CLB on E -M
Attach CLB with (2)-10d nails at each web.

| Loading | Live | Dead | (psf) |
|---|---|---|---|
| TC | 20.0 | 10.0 | |
| BC | 0.0 | 10.0 | |
| Total | 20.0 | 20.0 | 40.0 |
| Spacing | | | 24.0" |

Lumber Duration Factor 1.25
Plate Duration Factor 1.25
TC Fb=1.15 Fc=1.10 Ft=1.10
BC Fb=1.10 Fc=1.10 Ft=1.10

Plus 6 Wind Load Case(s)
Plus 1 UBC LL Load Case(s)

| Jt | React Lbs | Uplft Lbs | Size In-Sx | Req'd In-Sx |
|---|---|---|---|---|
| P | 1187 | 170 | 8- 0 | 1- 8 |
| | | | Hz = | -359 |
| D | 1315 | 169 | 8- 0 | 1- 9 |
| | | | Hz = | 181 |

| Membr | CSI | P Lbs | Axl-CSI-Bnd |
|---|---|---|---|
| ----------Top Chords---------- | | | |
| O -B | 0.06 | 138 C | 0.01 0.05 |
| B -C | 0.33 | 691 C | 0.00 0.33 |
| C -M | 0.50 | 783 C | 0.00 0.50 |
| M -N | 0.51 | 1405 C | 0.01 0.50 |
| N -D | 0.44 | 2059 C | 0.02 0.42 |
| --------Bottom Chords--------- | | | |
| P -E | 0.42 | 247 T | 0.01 0.41 |
| E -H | 0.54 | 1259 T | 0.13 0.41 |
| H -G | 0.45 | 1848 T | 0.31 0.14 |
| G -D | 0.45 | 1848 T | 0.31 0.14 |
| ----------Webs---------- | | | |
| P -O | 0.27 | 77 C | WindLd 1 Br |
| P -B | 0.40 | 1068 C | 1 Br |
| B -E | 0.22 | 945 T | |
| E -C | 0.02 | 138 T | 1 Br |
| E -M | 0.26 | 809 C | 1 Br |
| H -M | 0.07 | 476 T | |
| H -N | 0.52 | 650 C | |
| G -N | 0.04 | 290 T | |

TL Defl -0.32" in P -E L/999
LL Defl -0.15" in P -E L/999
Shear // Grain in C -M 0.26

Plates for each ply each face.
PLATING CONFORMS TO TPI.
REPORT: NER 691
ROBBINS ENGINEERING, INC.
BASED ON SP LUMBER
USING GROSS AREA TEST.
Plate - LOCK 20 Ga, Gross Area
Plate - RHS 20 Ga, Gross Area

| Jt | Type | Plt Size | X | Y | JSI |
|---|---|---|---|---|---|
| O | LOCK | 2.0x 4.0 | Ctr | Ctr | 0.42 |
| B | LOCK | 5.0x 5.0 | Ctr | -0.2 | 0.91 |
| C | LOCK | 5.0x 5.0 | Ctr | -0.2 | 0.91 |
| M | LOCK | 3.0x 7.0 | Ctr | Ctr | 0.45 |
| N | LOCK | 5.0x 7.0 | 0.2 | 0.5 | 0.67 |
| D | LOCK | 4.0x 6.0 | Ctr | 0.1 | 0.64 |
| P | LOCK | 4.0x 6.0 | Ctr | Ctr | 0.63 |
| E | LOCK | 4.0x 8.0 | Ctr | Ctr | 0.43 |
| H | LOCK | 5.0x 7.0 | Ctr | -0.5 | 0.68 |
| G | LOCK | 2.0x 4.0 | Ctr | Ctr | 0.41 |

REVIEWED BY:
Robbins Engineering, Inc.
PO Box 280055
Tampa, FL 33682

REFER TO ROBBINS ENG. GENERAL NOTES AND SYMBOLS SHEET FOR ADDITIONAL SPECIFICATIONS.

NOTES:
Trusses Manufactured by:
Mayo Truss Co. Inc.
Analysis Conforms To:
FBC2004
OH Loading
Soffit psf 2.0
Provide connection to bearing for 360 Lbs Horiz Reaction
Design checked for 10 psf non-concurrent LL on BC.
Wind Loads - ANSI / ASCE 7-02
Truss is designed as a Main Wind-Force Resistance System.
Wind Speed: 110 mph
Mean Roof Height: 15-0
Exposure Category: B
Occupancy Factor : 1.00
Building Type: Enclosed
Zone location: Exterior
TC Dead Load : 5.0 psf
BC Dead Load : 5.0 psf
Max comp. force 2059 Lbs
Quality Control Factor 1.25

Truss Design Engineer: Philip J. O'Regan
License #: 58126
Address: P.O. Box 280055, Tampa, FL 33682

Date Sealed: 8/28/2006

| Job | Mark | Quan | Type | Span | P1-H1 | Left OH | Right OH | Engineering |
|---|---|---|---|---|---|---|---|---|
| whitt-bohlmann | A9 | 1 | SP | 460000 | 6 | 2- 0- 0 | 2- 0- 0 | T06082949 |

U# J#whitt-bohlmann BOHLMANN

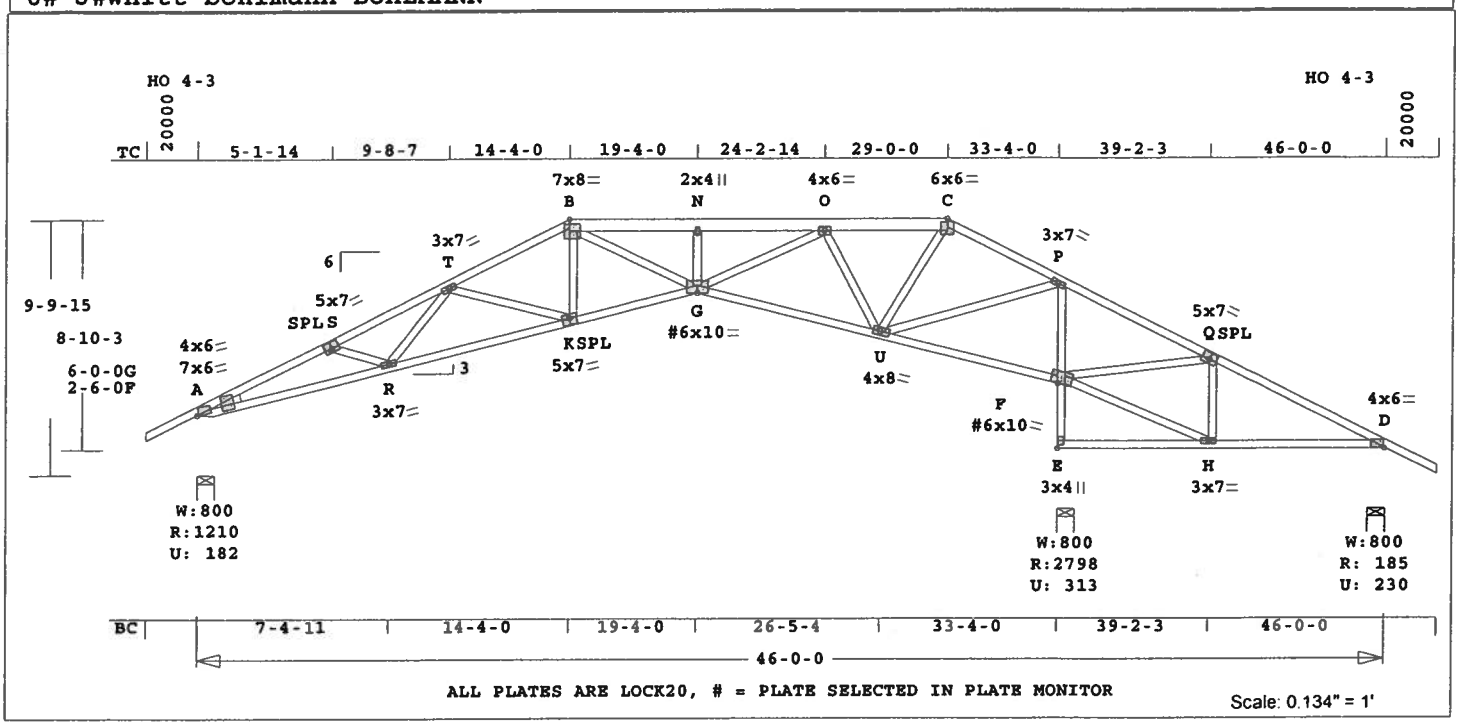


ALL PLATES ARE LOCK20, # = PLATE SELECTED IN PLATE MONITOR

Scale: 0.134" = 1'

Robbins Engineering, Inc./Online Plus™ APPROX. TRUSS WEIGHT: 328.3 LBS
Tampa, FL 33682

Online Plus -- Version 19.0.034
RUN DATE: 26-AUG-06

| | CSI | -Size- | ----Lumber---- |
|---|---|---|---|
| TC | 0.85 | 2x 4 | SP-#2 |
| EX | B -C | 2x 6 | SP-#2 |
| BC | 0.83 | 2x 4 | SP-#2 |
| CW | 0.25 | 2x 4 | SP-#2 |
| WB | 0.62 | 2x 4 | SP-#2 |
| PB | --- | 2x 4 | SP-#2 |

Brace truss as follows:

| O.C. | From | To |
|---|---|---|
| TC Cont. | 0- 0- 0 | 46- 0- 0 |
| BC Cont. | 0- 0- 0 | 46- 0- 0 |

| Loading | Live | Dead | (psf) |
|---|---|---|---|
| TC | 20.0 | 10.0 | |
| BC | 0.0 | 10.0 | |
| Total | 20.0 | 20.0 | 40.0 |
| Spacing | | | 24.0" |

Lumber Duration Factor 1.25
Plate Duration Factor 1.25
TC Fb=1.15 Fc=1.10 Ft=1.10
BC Fb=1.10 Fc=1.10 Ft=1.10

Plus 6 Wind Load Case(s)
Plus 1 UBC LL Load Case(s)

| Jt | React Lbs | Uplft Lbs | Size In-Sx | Req'd In-Sx |
|---|---|---|---|---|
| A | 1210 | 182 | 8- 0 | 1- 8 |
| | | | Hz = | -171 |
| E | 2798 | 314 | 8- 0 | 3- 2 |
| D | 186 | 231 | 8- 0 | 1- 8 |
| | | | Hz = | 175 |

| Membr | CSI | P Lbs | Axl | CSI-Bnd |
|---|---|---|---|---|
| ----------Top Chords---------- | | | | |
| A -S | 0.58 | 3255 | C | 0.07 0.51 |
| S -T | 0.40 | 2991 | C | 0.09 0.31 |
| T -B | 0.23 | 2146 | C | 0.02 0.21 |
| B -N | 0.17 | 2462 | C | 0.01 0.16 |
| N -O | 0.15 | 2461 | C | 0.01 0.14 |
| O -C | 0.14 | 163 | C | 0.00 0.14 |
| C -P | 0.29 | 261 | C | 0.00 0.29 |
| P -Q | 0.85 | 2473 | T | 0.40 0.45 |
| Q -D | 0.61 | 914 | T | 0.16 0.45 |
| --------Bottom Chords--------- | | | | |
| A -R | 0.83 | 2956 | T | 0.49 0.34 |
| R -K | 0.62 | 2589 | T | 0.43 0.19 |
| K -G | 0.54 | 1967 | T | 0.33 0.21 |
| G -U | 0.39 | 740 | T | 0.07 0.32 |
| U -F | 0.33 | 2284 | C | 0.01 0.32 |
| E -H | 0.31 | 47 | C | 0.00 0.31 |
| H -D | 0.31 | 801 | C | 0.00 0.31 |
| ----------Chord-Webs---------- | | | | |
| E -F | 0.25 | 2763 | C | 0.25 0.00 |
| F -P | 0.25 | 2241 | C | 0.24 0.01 |
| ----------Webs---------- | | | | |
| S -R | 0.02 | 197 | C | |
| R -T | 0.06 | 411 | T | |
| T -K | 0.19 | 614 | C | |
| K -B | 0.08 | 452 | T | |
| B -G | 0.11 | 607 | T | |
| G -N | 0.03 | 296 | C | |
| G -O | 0.35 | 1921 | T | |
| O -U | 0.35 | 1292 | C | |
| U -C | 0.04 | 130 | C | |
| U -P | 0.46 | 2536 | T | |
| F -Q | 0.62 | 1433 | C | |
| F -H | 0.42 | 829 | C | |
| H -Q | 0.09 | 539 | T | |

TL Defl -0.57" in R -K L/683
LL Defl -0.27" in R -K L/999

| Hz Disp | LL | DL | TL |
|---|---|---|---|
| Jt E | 0.13" | 0.13" | 0.27" |

Shear // Grain in A -S 0.26

Plates for each ply each face.
PLATING CONFORMS TO TPI.
REPORT: NER 691
ROBBINS ENGINEERING, INC.
BASED ON SP LUMBER
USING GROSS AREA TEST.
Plate - LOCK 20 Ga, Gross Area
Plate - RHS 20 Ga, Gross Area

| Jt | Type | Plt Size | X | Y | JSI |
|---|---|---|---|---|---|
| A | LOCK | 7.0x 6.0 | 11.5 | 4.5 | 1.00 |
| A | LOCK | 4.0x 6.0 | 0.7 | 1.1 | 0.00 |
| S | LOCK | 5.0x 7.0 | -0.2 | 0.5 | 0.84 |
| T | LOCK | 3.0x 7.0 | Ctr | Ctr | 0.54 |
| B | LOCK | 7.0x 8.0 | -0.5 | Ctr | 0.87 |
| N | LOCK | 2.0x 4.0 | Ctr | Ctr | 0.51 |
| O | LOCK | 4.0x 6.0 | Ctr | Ctr | 0.59 |
| C | LOCK | 6.0x 6.0 | Ctr | -0.6 | 0.75 |
| P | LOCK | 3.0x 7.0 | Ctr | Ctr | 0.98 |
| Q | LOCK | 5.0x 7.0 | 0.2 | 0.5 | 0.84 |
| D | LOCK | 4.0x 6.0 | Ctr | 0.1 | 0.79 |
| R | LOCK | 3.0x 7.0 | Ctr | Ctr | 0.50 |
| K | LOCK | 5.0x 7.0 | 0.1 | -0.5 | 0.85 |
| G# | LOCK | 6.0x10.0 | Ctr | -0.6 | 0.73 |
| U | LOCK | 4.0x 8.0 | 0.5 | -0.1 | 0.96 |
| F# | LOCK | 6.0x10.0 | 0.2 | 0.8 | 0.74 |
| E | LOCK | 3.0x 4.0 | Ctr | Ctr | 0.73 |
| H | LOCK | 3.0x 7.0 | Ctr | Ctr | 0.50 |

# = Plate Monitor used

REVIEWED BY:
Robbins Engineering, Inc.
PO Box 280055

REFER TO ROBBINS ENG. GENERAL NOTES AND SYMBOLS SHEET FOR ADDITIONAL SPECIFICATIONS.

NOTES:
Trusses Manufactured by:
Mayo Truss Co. Inc.
Analysis Conforms To:
FBC2004
OH Loading
Soffit psf 2.0
Design checked for 10 psf non-concurrent LL on BC.
Prevent truss rotation at all bearing locations.
NOTE: USER MODIFIED PLATES
This design may have plates selected through a plate monitor.
Wind Loads - ANSI / ASCE 7-02
Truss is designed as a Main Wind-Force Resistance System.
Wind Speed: 110 mph
Mean Roof Height: 15-0
Exposure Category: B
Occupancy Factor : 1.00
Building Type: Enclosed
Zone location: Exterior
TC Dead Load : 5.0 psf
BC Dead Load : 5.0 psf
Max comp. force 3255 Lbs
Quality Control Factor 1.25

Truss Design Engineer: Philip J. O'Regan
License #: 58126
Address: P.O. Box 280055, Tampa, FL 33682

PHILIP J. O'REGAN
LICENSE
No. 58126
STATE OF
FLORIDA
PROFESSIONAL ENGINEER

Date Sealed: 8/28/2006

| Job | Mark | Quan | Type | Span | P1-H1 | Left OH | Right OH | Engineering |
|---|---|---|---|---|---|---|---|---|
| whitt-bohlmann | A11 | 1 | SP | 460000 | 6 | 2- 0- 0 | 2- 0- 0 | T06082949 |

U# J#whitt-bohlmann BOHLMANN

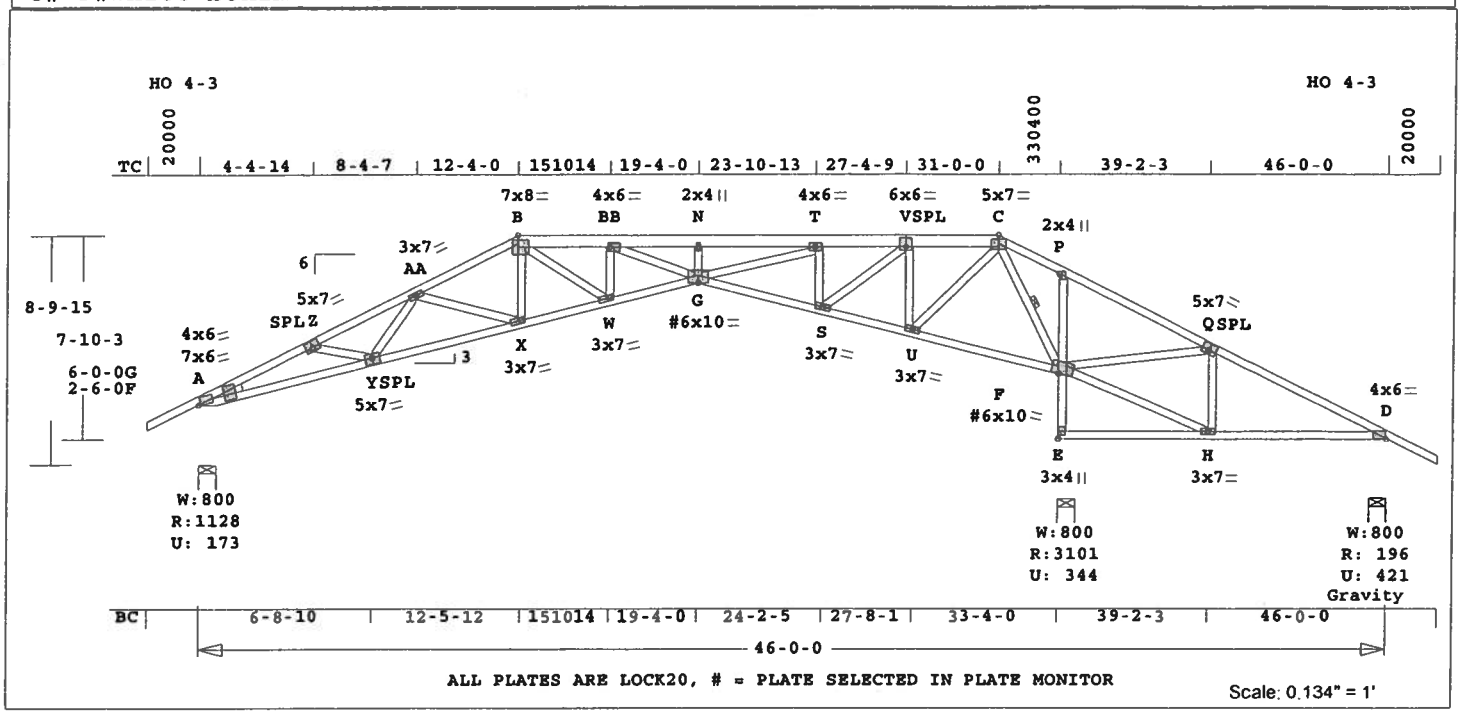


ALL PLATES ARE LOCK20, # = PLATE SELECTED IN PLATE MONITOR

Scale: 0.134" = 1'

Robbins Engineering, Inc./Online Plus™ APPROX. TRUSS WEIGHT: 338.1 LBS

Online Plus -- Version 19.0.034
RUN DATE: 26-AUG-06

| | CSI | -Size- | ----Lumber---- |
|---|---|---|---|
| TC | 0.68 | 2x 4 | SP-#2 |
| EX B -V | | 2x 6 | SP-#2 |
| EX V -C | | 2x 6 | SP-#2 |
| EX C -Q | | 2x 4 | SP-#1 |
| BC | 0.74 | 2x 4 | SP-#2 |
| CW | 0.31 | 2x 4 | SP-#2 |
| WB | 0.74 | 2x 4 | SP-#2 |
| PB | --- | 2x 4 | SP-#2 |

Brace truss as follows:

| O.C. | From | To |
|---|---|---|
| TC Cont. | 0- 0- 0 | 46- 0- 0 |
| BC Cont. | 0- 0- 0 | 46- 0- 0 |

WB 1 rows CLB on C -F
Attach CLB with (2)-10d nails at each web.

| Loading | Live | Dead | (psf) |
|---|---|---|---|
| TC | 20.0 | 10.0 | |
| BC | 0.0 | 10.0 | |
| Total | 20.0 | 20.0 | 40.0 |
| Spacing | | | 24.0" |

Lumber Duration Factor 1.25
Plate Duration Factor 1.25
TC Fb=1.15 Fc=1.10 Ft=1.10
BC Fb=1.10 Fc=1.10 Ft=1.10

Plus 6 Wind Load Case(s)
Plus 1 UBC LL Load Case(s)

| Jt | React Lbs | Uplft Lbs | Size In-Sx | Req'd In-Sx |
|---|---|---|---|---|
| A | 1128 | 174 | 8- 0 | 1- 8 |
| | | | Hz = | -148 |
| E | 3102 | 344 | 8- 0 | 3- 8 |
| D | 196 | 422G | 8- 0 | 1- 8 |
| | | | Hz = | 153 |

G = Gravity Uplift

| Membr | CSI | P Lbs | Axl | CSI-Bnd |
|---|---|---|---|---|
| ----------Top Chords---------- | | | | |
| A -Z | 0.52 | 2942 | C | 0.06 0.46 |
| Z -AA | 0.34 | 2731 | C | 0.07 0.27 |
| AA-B | 0.21 | 2116 | C | 0.02 0.19 |
| B -BB | 0.10 | 2430 | C | 0.01 0.09 |
| BB-N | 0.17 | 2919 | C | 0.02 0.15 |
| N -T | 0.19 | 2919 | C | 0.02 0.17 |
| T -V | 0.17 | 401 | C | 0.00 0.17 |
| V -C | 0.40 | 851 | T | 0.10 0.30 |
| C -P | 0.86 | 3159 | T | 0.42 0.44 |
| P -Q | 0.77 | 3255 | T | 0.41 0.36 |
| Q -D | 0.68 | 1390 | T | 0.24 0.44 |
| --------Bottom Chords--------- | | | | |
| A -Y | 0.74 | 2658 | T | 0.44 0.30 |
| Y -X | 0.54 | 2442 | T | 0.40 0.14 |
| X -W | 0.42 | 1932 | T | 0.32 0.10 |
| W -G | 0.66 | 2516 | T | 0.42 0.24 |
| G -S | 0.32 | 400 | T | 0.06 0.26 |
| S -U | 0.17 | 872 | C | 0.00 0.17 |
| U -F | 0.25 | 1749 | C | 0.00 0.25 |
| E -H | 0.32 | 51 | C | 0.00 0.32 |
| H -D | 0.39 | 1227 | C | 0.02 0.37 |
| ----------Chord-Webs---------- | | | | |
| E -F | 0.31 | 3068 | C | 0.07 0.24 |
| F -P | 0.06 | 456 | C | 0.00 0.06 |
| ----------Webs---------- | | | | |
| Z -Y | 0.01 | 135 | C | |
| Y -AA | 0.04 | 288 | T | |
| AA-X | 0.12 | 491 | C | |
| X -B | 0.07 | 396 | T | |
| B -W | 0.11 | 647 | T | |
| W -BB | 0.05 | 486 | C | |
| BB-G | 0.09 | 524 | T | |
| G -N | 0.01 | 111 | C | |
| G -T | 0.48 | 2616 | T | |
| S -T | 0.13 | 1112 | C | |
| S -V | 0.29 | 1575 | T | |
| U -V | 0.15 | 951 | C | |
| U -C | 0.21 | 1154 | T | |
| C -F | 0.35 | 2643 | C | 1 Br |
| F -Q | 0.74 | 1708 | C | |
| F -H | 0.65 | 1280 | C | |
| H -Q | 0.12 | 695 | T | |

TL Defl -0.56" in X -W L/694
LL Defl -0.28" in X -W L/999

| Hz Disp | LL | DL | TL |
|---|---|---|---|
| Jt E | 0.16" | 0.16" | 0.33" |

Shear // Grain in C -P 0.33

Plates for each ply each face.
PLATING CONFORMS TO TPI.
REPORT: NER 691
ROBBINS ENGINEERING, INC.
BASED ON SP LUMBER
USING GROSS AREA TEST.
Plate - LOCK 20 Ga, Gross Area
Plate - RHS 20 Ga, Gross Area

| Jt | Type | Plt Size | X | Y | JSI |
|---|---|---|---|---|---|
| A | LOCK | 7.0x 6.0 | 11.5 | 4.5 | 1.00 |
| A | LOCK | 4.0x 6.0 | 0.7 | 1.1 | 0.00 |
| Z | LOCK | 5.0x 7.0 | -0.2 | 0.5 | 0.84 |
| AA | LOCK | 3.0x 7.0 | Ctr | Ctr | 0.52 |
| B | LOCK | 7.0x 8.0 | -0.5 | Ctr | 0.87 |
| BB | LOCK | 4.0x 6.0 | Ctr | Ctr | 0.50 |
| N | LOCK | 2.0x 4.0 | Ctr | Ctr | 0.51 |
| T | LOCK | 4.0x 6.0 | Ctr | Ctr | 0.87 |
| V | LOCK | 6.0x 6.0 | Ctr | 1.2 | 0.68 |
| C | LOCK | 5.0x 7.0 | Ctr | -0.3 | 0.77 |
| P | LOCK | 2.0x 4.0 | Ctr | Ctr | 0.24 |
| Q | LOCK | 5.0x 7.0 | 0.2 | 0.5 | 0.84 |
| D | LOCK | 4.0x 6.0 | Ctr | 0.1 | 0.79 |
| Y | LOCK | 5.0x 7.0 | 0.1 | -0.5 | 0.85 |
| X | LOCK | 3.0x 7.0 | Ctr | Ctr | 0.43 |
| W | LOCK | 3.0x 7.0 | Ctr | Ctr | 0.45 |
| G# | LOCK | 6.0x10.0 | Ctr | -0.6 | 0.73 |
| S | LOCK | 3.0x 7.0 | Ctr | Ctr | 0.65 |
| U | LOCK | 3.0x 7.0 | Ctr | Ctr | 0.56 |
| F# | LOCK | 6.0x10.0 | 0.2 | 0.8 | 0.74 |
| E | LOCK | 3.0x 4.0 | Ctr | Ctr | 0.81 |
| H | LOCK | 3.0x 7.0 | Ctr | Ctr | 0.50 |

# = Plate Monitor used

REVIEWED BY:
Robbins Engineering, Inc.
PO Box 280055
Tampa, FL 33682

REFER TO ROBBINS ENG. GENERAL NOTES AND SYMBOLS SHEET FOR ADDITIONAL SPECIFICATIONS.

NOTES:
Trusses Manufactured by:
Mayo Truss Co. Inc.
Analysis Conforms To:
FBC2004
OH Loading
Soffit psf 2.0
Design checked for 10 psf non-concurrent LL on BC.
Prevent truss rotation at all bearing locations.
NOTE: USER MODIFIED PLATES
This design may have plates selected through a plate monitor.
Wind Loads - ANSI / ASCE 7-02
Truss is designed as a Main Wind-Force Resistance System.
Wind Speed: 110 mph
Mean Roof Height: 15-0
Exposure Category: B

Truss Design Engineer: Philip J. O'Regan
License #: 58126
Address: P.O. Box 280055, Tampa, FL 33682

PHILIP J. O'REGAN
LICENSE
No. 58126
STATE OF
FLORIDA
PROFESSIONAL ENGINEER

Date Sealed: 8/28/2006

| Job | Mark | Quan | Type | Span | P1-H1 | Left OH | Right OH | Engineering |
|---|---|---|---|---|---|---|---|---|
| whitt-bohlmann | A11 | 1 | SP | 460000 | 6 | 2- 0- 0 | 2- 0- 0 | T06082949 |

U# J#whitt-bohlmann BOHLMANN

Occupancy Factor : 1.00
Building Type: Enclosed
Zone location: Exterior
TC Dead Load : 5.0 psf
BC Dead Load : 5.0 psf
Max comp. force 3068 Lbs
Quality Control Factor 1.25

| Job | Mark | Quan | Type | Span | P1-H1 | Left OH | Right OH | Engineering |
|---|---|---|---|---|---|---|---|---|
| whitt-bohlmann | A13 | 1 | HIPP | 460000 | 6 | 0 | 2- 0- 0 | T06082949 |

U# J#whitt-bohlmann BOHLMANN

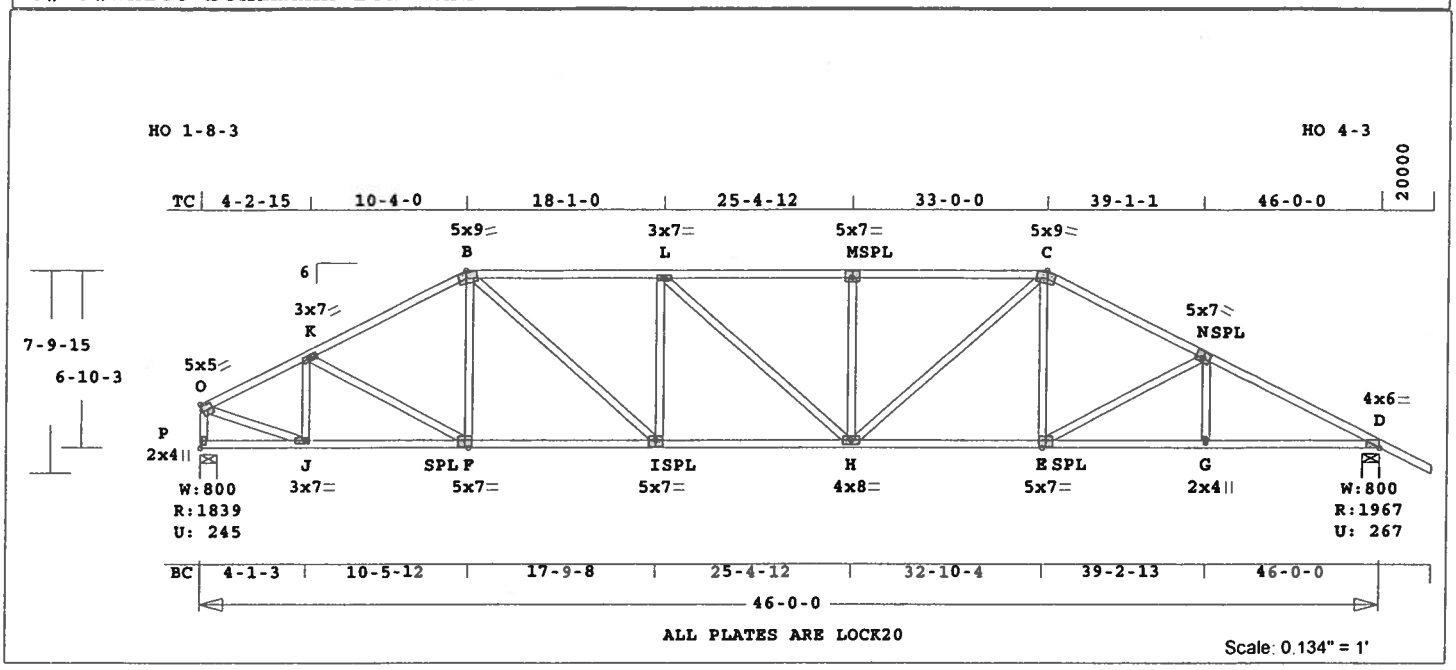


Robbins Engineering, Inc./Online Plus™ APPROX. TRUSS WEIGHT: 332.6 LBS

Online Plus -- Version 19.0.034
RUN DATE: 26-AUG-06

| | CSI | -Size- | ----Lumber---- |
|---|---|---|---|
| TC | 0.75 | 2x 4 | SP-#2 |
| BC | 0.67 | 2x 4 | SP-#2 |
| WB | 0.38 | 2x 4 | SP-#2 |

Brace truss as follows:

| O.C. | From | To |
|---|---|---|
| TC Cont. | 0- 0- 0 | 46- 0- 0 |
| BC Cont. | 0- 0- 0 | 46- 0- 0 |

| Loading | Live | Dead | (psf) |
|---|---|---|---|
| TC | 20.0 | 10.0 | |
| BC | 0.0 | 10.0 | |
| Total | 20.0 | 20.0 | 40.0 |
| Spacing | | | 24.0" |

Lumber Duration Factor 1.25
Plate Duration Factor 1.25
TC Fb=1.15 Fc=1.10 Ft=1.10
BC Fb=1.10 Fc=1.10 Ft=1.10

Plus 6 Wind Load Case(s)
Plus 1 UBC LL Load Case(s)

| Jt | React Lbs | Uplft Lbs | Size Req'd In-Sx | In-Sx |
|---|---|---|---|---|
| P | 1840 | 245 | 8- 0 | 2- 3 |
| | | | Hz = | -161 |
| D | 1968 | 267 | 8- 0 | 2- 5 |
| | | | Hz = | 135 |

| Membr | CSI | P Lbs | Axl | CSI | Bnd |
|---|---|---|---|---|---|
| ----------Top Chords---------- | | | | | |
| O -K | 0.29 | 2198 | C | 0.03 | 0.26 |
| K -B | 0.37 | 2521 | C | 0.09 | 0.28 |
| B -L | 0.69 | 3086 | C | 0.17 | 0.52 |
| L -M | 0.60 | 3209 | C | 0.06 | 0.54 |
| M -C | 0.75 | 3209 | C | 0.18 | 0.57 |
| C -N | 0.42 | 2928 | C | 0.05 | 0.37 |
| N -D | 0.49 | 3442 | C | 0.17 | 0.32 |
| --------Bottom Chords--------- | | | | | |
| P -J | 0.14 | 143 | T | 0.00 | 0.14 |
| J -F | 0.48 | 1980 | T | 0.33 | 0.15 |
| F -I | 0.53 | 2256 | T | 0.37 | 0.16 |
| I -H | 0.67 | 3086 | T | 0.51 | 0.16 |
| H -E | 0.59 | 2616 | T | 0.43 | 0.16 |
| E -G | 0.66 | 3076 | T | 0.51 | 0.15 |
| G -D | 0.60 | 3076 | T | 0.51 | 0.09 |
| ----------Webs---------- | | | | | |
| P -O | 0.17 | 1806 | C | WindLd | |
| O -J | 0.38 | 2109 | T | | |
| J -K | 0.10 | 619 | C | | |
| K -F | 0.05 | 313 | T | | |
| F -B | 0.02 | 169 | T | | |
| B -I | 0.20 | 1098 | T | | |
| I -L | 0.30 | 570 | C | | |
| L -H | 0.03 | 163 | T | | |
| H -M | 0.25 | 473 | C | | |
| H -C | 0.14 | 784 | T | | |
| E -C | 0.07 | 460 | T | | |
| E -N | 0.33 | 515 | C | | |
| G -N | 0.03 | 240 | T | | |

TL Defl -0.49" in I -H L/999
LL Defl -0.23" in I -H L/999
Shear // Grain in M -C 0.32

Plates for each ply each face.
PLATING CONFORMS TO TPI.
REPORT: NER 691
ROBBINS ENGINEERING, INC.
BASED ON SP LUMBER
USING GROSS AREA TEST.
Plate - LOCK 20 Ga, Gross Area
Plate - RHS 20 Ga, Gross Area

| Jt | Type | Plt Size | X | Y | JSI |
|---|---|---|---|---|---|
| O | LOCK | 5.0x 5.0 | Ctr | Ctr | 0.84 |
| K | LOCK | 3.0x 7.0 | Ctr | Ctr | 0.44 |
| B | LOCK | 5.0x 9.0 | 0.8 | -3.5 | 0.73 |
| L | LOCK | 3.0x 7.0 | Ctr | Ctr | 0.48 |
| M | LOCK | 5.0x 7.0 | Ctr | 0.5 | 0.85 |
| C | LOCK | 5.0x 9.0 | -0.8 | -3.5 | 0.73 |
| N | LOCK | 5.0x 7.0 | 0.2 | 0.5 | 0.84 |
| D | LOCK | 4.0x 6.0 | Ctr | 0.1 | 0.79 |
| P | LOCK | 2.0x 4.0 | Ctr | Ctr | 0.62 |
| J | LOCK | 3.0x 7.0 | Ctr | Ctr | 0.68 |
| F | LOCK | 5.0x 7.0 | Ctr | -0.5 | 0.85 |
| I | LOCK | 5.0x 7.0 | Ctr | -0.5 | 0.85 |
| H | LOCK | 4.0x 8.0 | Ctr | Ctr | 0.46 |
| E | LOCK | 5.0x 7.0 | Ctr | -0.5 | 0.85 |
| G | LOCK | 2.0x 4.0 | Ctr | Ctr | 0.51 |

REVIEWED BY:
Robbins Engineering, Inc.

PO Box 280055
Tampa, FL 33682

REFER TO ROBBINS ENG. GENERAL NOTES AND SYMBOLS SHEET FOR ADDITIONAL SPECIFICATIONS.

NOTES:
Trusses Manufactured by:
Mayo Truss Co. Inc.
Analysis Conforms To:
FBC2004
OH Loading
Soffit psf 2.0
Design checked for 10 psf non-concurrent LL on BC.
Wind Loads - ANSI / ASCE 7-02
Truss is designed as a Main Wind-Force Resistance System.
Wind Speed: 110 mph
Mean Roof Height: 15-0
Exposure Category: B
Occupancy Factor : 1.00
Building Type: Enclosed
Zone location: Exterior
TC Dead Load : 5.0 psf
BC Dead Load : 5.0 psf
Max comp. force 3442 Lbs
Quality Control Factor 1.25

Truss Design Engineer: Philip J. O'Regan
License #: 58126
Address: P.O. Box 280055, Tampa, FL 33682

PHILIP J. O'REGAN
LICENSE
No. 58126
STATE OF
FLORIDA
PROFESSIONAL ENGINEER

Date Sealed: 8/28/2006

| Job | Mark | Quan | Type | Span | P1-H1 | Left OH | Right OH | Engineering |
|---|---|---|---|---|---|---|---|---|
| whitt-bohlmann | A15 | 1 | HIPP | 460000 | 6 | 0 | 2- 0- 0 | T06082949 |

U# J#whitt-bohlmann BOHLMANN

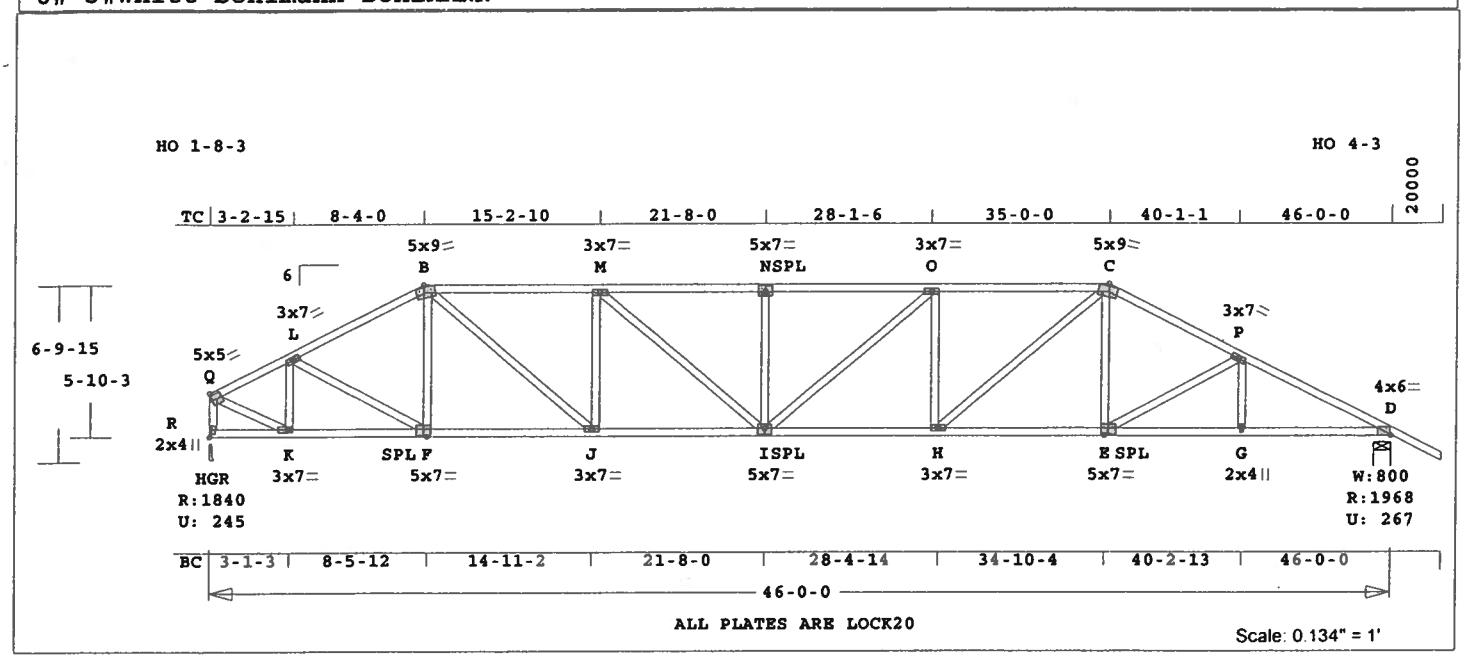


Robbins Engineering, Inc./Online Plus™ APPROX. TRUSS WEIGHT: 334.4 LBS

Online Plus -- Version 19.0.034
RUN DATE: 26-AUG-06

| | CSI | -Size- | ----Lumber---- |
|---|---|---|---|
| TC | 0.59 | 2x 4 | SP-#2 |
| BC | 0.72 | 2x 4 | SP-#2 |
| WB | 0.36 | 2x 4 | SP-#2 |

Brace truss as follows:

| | O.C. | From | To |
|---|---|---|---|
| TC Cont. | | 0- 0- 0 | 46- 0- 0 |
| BC Cont. | | 0- 0- 0 | 46- 0- 0 |

| Loading | Live | Dead | (psf) |
|---|---|---|---|
| TC | 20.0 | 10.0 | |
| BC | 0.0 | 10.0 | |
| Total | 20.0 | 20.0 | 40.0 |
| Spacing | | | 24.0" |

Lumber Duration Factor 1.25
Plate Duration Factor 1.25
TC Fb=1.15 Fc=1.10 Ft=1.10
BC Fb=1.10 Fc=1.10 Ft=1.10

Plus 6 Wind Load Case(s)
Plus 1 UBC LL Load Case(s)

| Jt | React Lbs | Uplft Lbs | Size Req'd In-Sx | In-Sx |
|---|---|---|---|---|
| R | 1840 | 245 | 3- 8 | 2- 3 |
| | | | Hz = | -139 |
| D | 1968 | 267 | 8- 0 | 2- 5 |
| | | | Hz = | 112 |

| Membr | CSI | P Lbs | | Axl | CSI | Bnd |
|---|---|---|---|---|---|---|
| ----------Top Chords---------- | | | | | | |
| Q -L | 0.18 | 1959 | C | 0.02 | 0.16 | |
| L -B | 0.26 | 2523 | C | 0.07 | 0.19 | |
| B -M | 0.49 | 3358 | C | 0.15 | 0.34 | |
| M -N | 0.49 | 3791 | C | 0.09 | 0.40 | |
| N -O | 0.51 | 3791 | C | 0.09 | 0.42 | |
| O -C | 0.59 | 3613 | C | 0.18 | 0.41 | |
| C -P | 0.36 | 3089 | C | 0.06 | 0.30 | |
| P -D | 0.33 | 3480 | C | 0.13 | 0.20 | |
| --------Bottom Chords--------- | | | | | | |
| R -K | 0.08 | 120 | T | 0.00 | 0.08 | |
| K -F | 0.40 | 1764 | T | 0.29 | 0.11 | |
| F -J | 0.49 | 2262 | T | 0.37 | 0.12 | |
| J -I | 0.68 | 3358 | T | 0.56 | 0.12 | |
| I -H | 0.72 | 3613 | T | 0.60 | 0.12 | |
| H -E | 0.58 | 2764 | T | 0.46 | 0.12 | |
| E -G | 0.64 | 3105 | T | 0.52 | 0.12 | |
| G -D | 0.65 | 3105 | T | 0.52 | 0.13 | |
| ----------Webs---------- | | | | | | |
| R -Q | 0.17 | 1813 | C | WindLd | | |
| Q -K | 0.36 | 1964 | T | | | |
| K -L | 0.10 | 782 | C | | | |
| L -F | 0.10 | 564 | T | | | |
| F -B | 0.05 | 141 | C | | | |
| B -J | 0.26 | 1424 | T | | | |
| J -M | 0.30 | 776 | C | | | |
| M -I | 0.10 | 566 | T | | | |
| I -N | 0.14 | 385 | C | | | |
| I -O | 0.05 | 232 | T | | | |
| H -O | 0.22 | 571 | C | | | |
| H -C | 0.20 | 1103 | T | | | |
| E -C | 0.05 | 381 | T | | | |
| E -P | 0.17 | 380 | C | | | |
| G -P | 0.02 | 186 | T | | | |

TL Defl -0.59" in I -H L/911
LL Defl -0.28" in I -H L/999
Shear // Grain in O -C 0.28

Plates for each ply each face.
PLATING CONFORMS TO TPI.
REPORT: NER 691
ROBBINS ENGINEERING, INC.
BASED ON SP LUMBER
USING GROSS AREA TEST.
Plate - LOCK 20 Ga, Gross Area
Plate - RHS 20 Ga, Gross Area

| Jt | Type | Plt Size | X | Y | JSI |
|---|---|---|---|---|---|
| Q | LOCK | 5.0x 5.0 | Ctr | Ctr | 0.84 |
| L | LOCK | 3.0x 7.0 | Ctr | Ctr | 0.44 |
| B | LOCK | 5.0x 9.0 | 0.8 | -3.5 | 0.80 |
| M | LOCK | 3.0x 7.0 | Ctr | Ctr | 0.47 |
| N | LOCK | 5.0x 7.0 | Ctr | 0.5 | 0.85 |
| O | LOCK | 3.0x 7.0 | Ctr | Ctr | 0.47 |
| C | LOCK | 5.0x 9.0 | -0.8 | -3.5 | 0.73 |
| P | LOCK | 3.0x 7.0 | Ctr | Ctr | 0.44 |
| D | LOCK | 4.0x 6.0 | Ctr | 0.1 | 0.79 |
| R | LOCK | 2.0x 4.0 | Ctr | Ctr | 0.62 |
| K | LOCK | 3.0x 7.0 | Ctr | Ctr | 0.65 |
| F | LOCK | 5.0x 7.0 | Ctr | -0.5 | 0.85 |
| J | LOCK | 3.0x 7.0 | Ctr | Ctr | 0.53 |
| I | LOCK | 5.0x 7.0 | Ctr | -0.5 | 0.85 |
| H | LOCK | 3.0x 7.0 | Ctr | Ctr | 0.47 |
| E | LOCK | 5.0x 7.0 | Ctr | -0.5 | 0.85 |
| G | LOCK | 2.0x 4.0 | Ctr | Ctr | 0.51 |

REVIEWED BY:
Robbins Engineering, Inc.
PO Box 280055
Tampa, FL 33682

REFER TO ROBBINS ENG. GENERAL NOTES AND SYMBOLS SHEET FOR ADDITIONAL SPECIFICATIONS.

NOTES:
Trusses Manufactured by:
Mayo Truss Co. Inc.
Analysis Conforms To:
FBC2004
OH Loading
Soffit psf 2.0
Design checked for 10 psf non-concurrent LL on BC.
Wind Loads - ANSI / ASCE 7-02
Truss is designed as a Main Wind-Force Resistance System.
Wind Speed: 110 mph
Mean Roof Height: 15-0
Exposure Category: B
Occupancy Factor : 1.00
Building Type: Enclosed
Zone location: Exterior
TC Dead Load : 5.0 psf
BC Dead Load : 5.0 psf
Max comp. force 3791 Lbs
Quality Control Factor 1.25

Truss Design Engineer: Philip J. O'Regan
License #: 58126
Address: P.O. Box 280055, Tampa, FL 33682

PHILIP J. O'REGAN LICENSE No. 58126 STATE OF FLORIDA PROFESSIONAL ENGINEER

Date Sealed: 8/28/2006

| Job | Mark | Quan | Type | Span | P1-H1 | Left OH | Right OH | Engineering |
|---|---|---|---|---|---|---|---|---|
| whitt-bohlmann | A17 | 1 | HIPP | 460000 | 6 | 0 | 2- 0- 0 | T06082949 |

U# J#whitt-bohlmann BOHLMANN

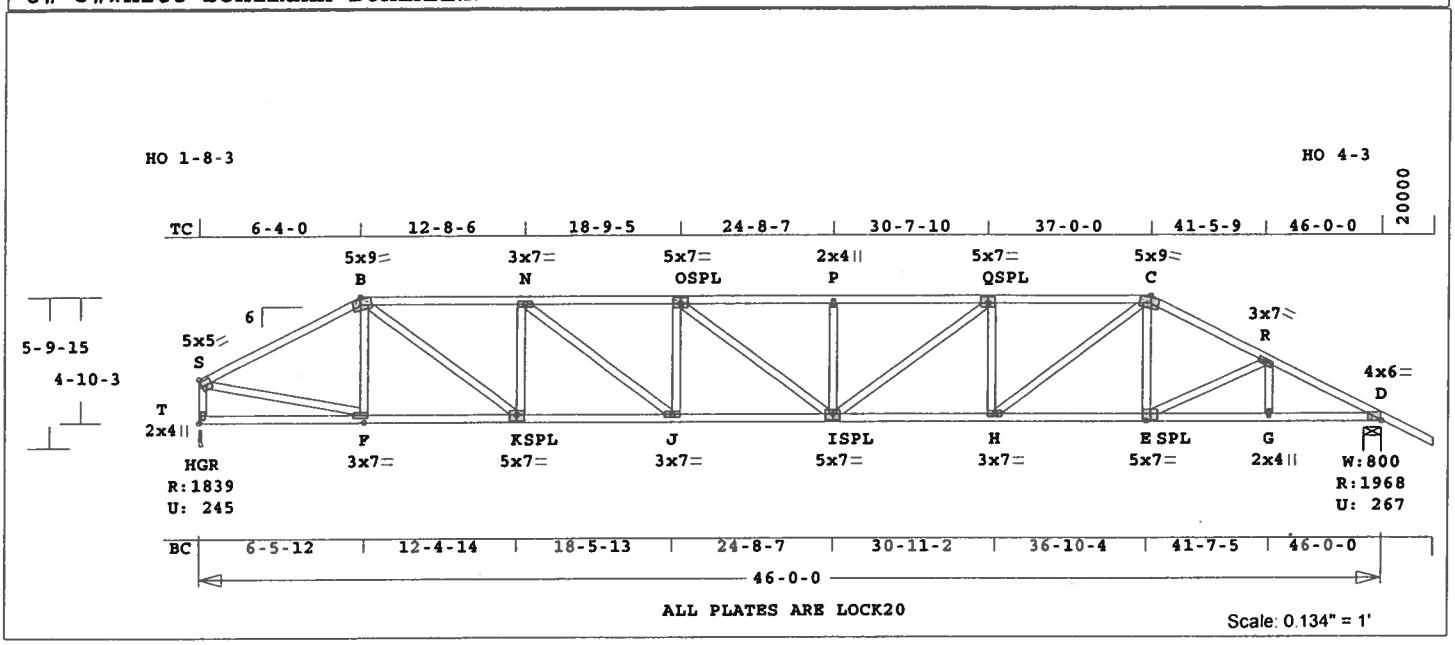


Robbins Engineering, Inc./Online Plus™ APPROX. TRUSS WEIGHT: 325.1 LBS

Online Plus -- Version 19.0.034
RUN DATE: 26-AUG-06

| | CSI | -Size- | ----Lumber---- |
|---|---|---|---|
| TC | 0.61 | 2x 4 | SP-#2 |
| BC | 0.82 | 2x 4 | SP-#2 |
| WB | 0.41 | 2x 4 | SP-#2 |

Brace truss as follows:

| O.C. | From | To |
|---|---|---|
| TC Cont. | 0- 0- 0 | 46- 0- 0 |
| BC Cont. | 0- 0- 0 | 46- 0- 0 |

| Loading | Live | Dead | (psf) |
|---|---|---|---|
| TC | 20.0 | 10.0 | |
| BC | 0.0 | 10.0 | |
| Total | 20.0 | 20.0 | 40.0 |
| Spacing | | | 24.0" |

Lumber Duration Factor 1.25
Plate Duration Factor 1.25
TC Fb=1.15 Fc=1.10 Ft=1.10
BC Fb=1.10 Fc=1.10 Ft=1.10

Plus 6 Wind Load Case(s)
Plus 1 UBC LL Load Case(s)

| Jt | React Lbs | Uplft Lbs | Size In-Sx | Req'd In-Sx |
|---|---|---|---|---|
| T | 1840 | 245 | 3- 8 | 2- 3 |
| | | | Hz = | -116 |
| D | 1968 | 267 | 8- 0 | 2- 5 |
| | | | Hz = | 90 |

| Membr | CSI | P Lbs | Axl | CSI | Bnd |
|---|---|---|---|---|---|
| ----------Top Chords---------- | | | | | |
| S -B | 0.61 | 2468 | C | 0.09 | 0.52 |
| B -N | 0.40 | 3669 | C | 0.09 | 0.31 |
| N -O | 0.50 | 4464 | C | 0.22 | 0.28 |
| O -P | 0.50 | 4603 | C | 0.23 | 0.27 |
| P -Q | 0.48 | 4603 | C | 0.23 | 0.25 |
| Q -C | 0.52 | 4103 | C | 0.20 | 0.32 |
| C -R | 0.32 | 3249 | C | 0.06 | 0.26 |
| R -D | 0.29 | 3516 | C | 0.08 | 0.21 |
| --------Bottom Chords--------- | | | | | |
| T -F | 0.24 | 98 | T | 0.00 | 0.24 |
| F -K | 0.51 | 2223 | T | 0.37 | 0.14 |
| K -J | 0.70 | 3669 | T | 0.61 | 0.09 |
| J -I | 0.82 | 4464 | T | 0.74 | 0.08 |
| I -H | 0.77 | 4103 | T | 0.68 | 0.09 |
| H -E | 0.59 | 2913 | T | 0.48 | 0.11 |
| E -G | 0.63 | 3130 | T | 0.52 | 0.11 |
| G -D | 0.69 | 3130 | T | 0.52 | 0.17 |
| ----------Webs---------- | | | | | |
| T -S | 0.17 | 1785 | C | WindLd | |
| S -F | 0.41 | 2272 | T | | |
| F -B | 0.09 | 364 | C | | |
| B -K | 0.33 | 1794 | T | | |
| K -N | 0.25 | 947 | C | | |
| N -J | 0.18 | 994 | T | | |
| J -O | 0.12 | 473 | C | | |
| O -I | 0.04 | 173 | T | | |
| I -P | 0.09 | 359 | C | | |
| I -Q | 0.11 | 625 | T | | |
| H -Q | 0.20 | 754 | C | | |
| H -C | 0.27 | 1476 | T | | |
| E -C | 0.04 | 307 | T | | |
| E -R | 0.07 | 233 | C | | |
| G -R | 0.01 | 121 | T | | |

TL Defl -0.80" in J -I L/677
LL Defl -0.39" in J -I L/999
Shear // Grain in Q -C 0.25

Plates for each ply each face.
PLATING CONFORMS TO TPI.
REPORT: NER 691
ROBBINS ENGINEERING, INC.
BASED ON SP LUMBER
USING GROSS AREA TEST.
Plate - LOCK 20 Ga, Gross Area
Plate - RHS 20 Ga, Gross Area

| Jt | Type | Plt Size | X | Y | JSI |
|---|---|---|---|---|---|
| S | LOCK | 5.0x 5.0 | Ctr | Ctr | 0.84 |
| B | LOCK | 5.0x 9.0 | 0.8 | -3.5 | 0.99 |
| N | LOCK | 3.0x 7.0 | Ctr | Ctr | 0.46 |
| O | LOCK | 5.0x 7.0 | Ctr | 0.5 | 0.85 |
| P | LOCK | 2.0x 4.0 | Ctr | Ctr | 0.51 |
| Q | LOCK | 5.0x 7.0 | Ctr | 0.5 | 0.85 |
| C | LOCK | 5.0x 9.0 | -0.8 | -3.5 | 0.82 |
| R | LOCK | 3.0x 7.0 | Ctr | Ctr | 0.44 |
| D | LOCK | 4.0x 6.0 | Ctr | 0.1 | 0.79 |
| T | LOCK | 2.0x 4.0 | Ctr | Ctr | 0.62 |
| F | LOCK | 3.0x 7.0 | Ctr | Ctr | 0.99 |
| K | LOCK | 5.0x 7.0 | Ctr | -0.5 | 0.85 |
| J | LOCK | 3.0x 7.0 | Ctr | Ctr | 0.46 |
| I | LOCK | 5.0x 7.0 | Ctr | -0.5 | 0.87 |
| H | LOCK | 3.0x 7.0 | Ctr | Ctr | 0.52 |
| E | LOCK | 5.0x 7.0 | Ctr | -0.5 | 0.85 |
| G | LOCK | 2.0x 4.0 | Ctr | Ctr | 0.51 |

REVIEWED BY:
Robbins Engineering, Inc.
PO Box 280055
Tampa, FL 33682

REFER TO ROBBINS ENG. GENERAL NOTES AND SYMBOLS SHEET FOR ADDITIONAL SPECIFICATIONS.

NOTES:
Trusses Manufactured by:
Mayo Truss Co. Inc.
Analysis Conforms To:
FBC2004
OH Loading
Soffit psf 2.0
Design checked for 10 psf non-concurrent LL on BC.
Wind Loads - ANSI / ASCE 7-02
Truss is designed as a Main Wind-Force Resistance System.
Wind Speed: 110 mph
Mean Roof Height: 15-0
Exposure Category: B
Occupancy Factor : 1.00
Building Type: Enclosed
Zone location: Exterior
TC Dead Load : 5.0 psf
BC Dead Load : 5.0 psf
Max comp. force 4603 Lbs
Quality Control Factor 1.25

Truss Design Engineer: Philip J. O'Regan
License #: 58126
Address: P.O. Box 280055, Tampa, FL 33682

PHILIP J. O'REGAN LICENSE No. 58126 STATE OF FLORIDA PROFESSIONAL ENGINEER



Date Sealed: 8/28/2006

| Job | Mark | Quan | Type | Span | P1-H1 | Left OH | Right OH | Engineering |
|---|---|---|---|---|---|---|---|---|
| whitt-bohlmann | A19 | 1*3P | HIPP | 460000 | 6 | 0 | 2- 0- 0 | T06082949 |

U# J#whitt-bohlmann BOHLMANN

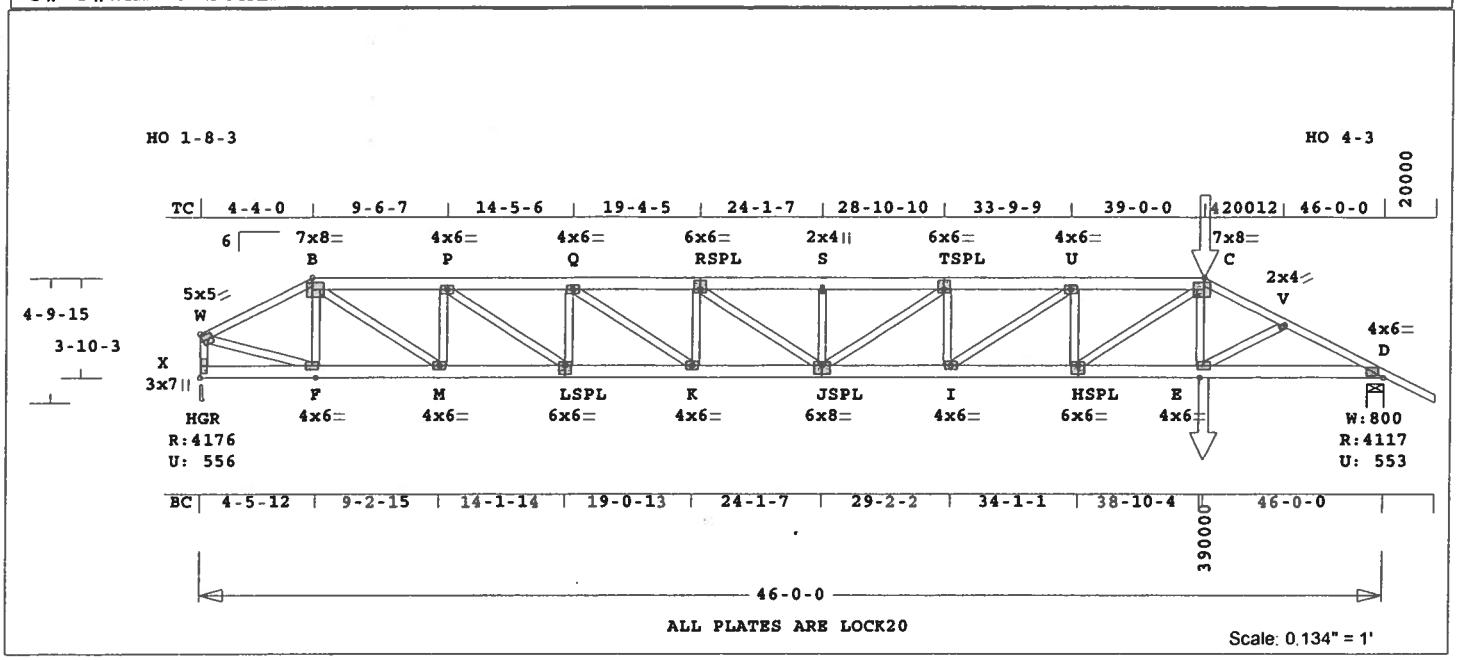


Robbins Engineering, Inc./Online Plus™ APPROX. TRUSS WEIGHT: 390.4 LBS

Online Plus -- Version 19.0.034
RUN DATE: 26-AUG-06
**********
* 3-Ply Truss *
**********

| | CSI | -Size- | ----Lumber---- |
|---|---|---|---|
| TC | 0.16 | 2x 6 | SP-#2 |
| EX W -B | | 2x 4 | SP-#2 |
| EX C -D | | 2x 4 | SP-#2 |
| BC | 0.61 | 2x 6 | SP-#2 |
| WB | 0.31 | 2x 4 | SP-#2 |

Brace truss as follows:

| | O.C. | From | To |
|---|---|---|---|
| TC Cont. | | 0- 0- 0 | 46- 0- 0 |
| BC Cont. | | 0- 0- 0 | 46- 0- 0 |

| Loading | Live | Dead | (psf) |
|---|---|---|---|
| TC | 20.0 | 10.0 | |
| BC | 0.0 | 10.0 | |
| Total | 20.0 | 20.0 | 40.0 |
| Spacing | | | 24.0" |

Lumber Duration Factor 1.25
Plate Duration Factor 1.25
TC Fb=1.15 Fc=1.10 Ft=1.10
BC Fb=1.10 Fc=1.10 Ft=1.10

Load Case # 1 Standard Loading
Lumber Duration Factor 1.25
Plate Duration Factor 1.25

| plf - | Live | Dead | From | To |
|---|---|---|---|---|
| TC V | 40 | 20 | 0.0' | 46.0' |
| BC V | 0 | 20 | 0.0' | 46.0' |
| BC V | 50 | 50 | 0.0' | 4.3' |
| TC V | 50 | 25 | 4.3' | 39.0' |
| BC V | 0 | 25 | 4.3' | 39.0' |
| BC V | 174 | 174 | 39.0' | CL-LB |
| TC V | 120 | 120 | 39.0' | CL-LB |

Plus 6 Wind Load Case(s)
Plus 1 UBC LL Load Case(s)

| Jt | React Lbs | Uplft Lbs | Size In-Sx | Req'd In-Sx |
|---|---|---|---|---|
| X | 4177 | 557 | 3- 8 | 1-10 |
| | | | Hz = | -91 |
| D | 4118 | 554 | 8- 0 | 1-10 |
| | | | Hz = | 66 |

| Membr | CSI | P Lbs | Axl | CSI-Bnd |
|---|---|---|---|---|
| ----------Top Chords---------- | | | | |
| W -B | 0.08 | 5228 | C | 0.02 0.06 |
| B -P | 0.09 | 9050 | C | 0.02 0.07 |
| P -Q | 0.14 | 12035 | C | 0.05 0.09 |
| Q -R | 0.14 | 13699 | C | 0.06 0.08 |
| R -S | 0.16 | 14096 | C | 0.07 0.09 |
| S -T | 0.16 | 14096 | C | 0.07 Q.09 |
| T -U | 0.14 | 13219 | C | 0.06 0.08 |
| U -C | 0.14 | 11109 | C | 0.04 0.10 |
| C -V | 0.20 | 8208 | C | 0.04 0.16 |
| V -D | 0.14 | 8263 | C | 0.05 0.09 |
| --------Bottom Chords--------- | | | | |
| X -F | 0.06 | 74 | T | 0.00 0.06 |
| F -M | 0.23 | 4715 | T | 0.19 0.04 |
| M -L | 0.42 | 9050 | T | 0.36 0.06 |
| L -K | 0.54 | 12035 | T | 0.48 0.06 |
| K -J | 0.61 | 13699 | T | 0.55 0.06 |
| J -I | 0.59 | 13219 | T | 0.53 0.06 |
| I -H | 0.50 | 11109 | T | 0.45 0.05 |
| H -E | 0.34 | 7381 | T | 0.29 0.05 |
| E -D | 0.34 | 7356 | T | 0.29 0.05 |
| ----------Webs---------- | | | | |
| X -W | 0.12 | 3934 | C | WindLd |
| W -F | 0.30 | 4906 | T | |
| F -B | 0.03 | 1033 | C | |
| B -M | 0.31 | 5179 | T | |
| M -P | 0.08 | 2662 | C | |
| P -L | 0.22 | 3627 | T | |
| L -Q | 0.05 | 1830 | C | |
| Q -K | 0.12 | 2022 | T | |
| K -R | 0.02 | 931 | C | |
| R -J | 0.02 | 482 | T | |
| J -S | 0.02 | 661 | C | |
| J -T | 0.06 | 1065 | T | |
| I -T | 0.03 | 1253 | C | |
| I -U | 0.15 | 2564 | T | |
| H -U | 0.06 | 2173 | C | |
| H -C | 0.27 | 4453 | T | |
| E -C | 0.03 | 585 | T | |
| E -V | 0.00 | 95 | T | |

TL Defl -0.67" in K -J L/807
LL Defl -0.33" in K -J L/999
Shear // Grain in U -C 0.10

Plates for each ply each face.
PLATING CONFORMS TO TPI.
REPORT: NER 691
ROBBINS ENGINEERING, INC.
BASED ON SP LUMBER
USING GROSS AREA TEST.
Plate - LOCK 20 Ga, Gross Area
Plate - RHS 20 Ga, Gross Area

| Jt | Type | Plt Size | X | Y | JSI |
|---|---|---|---|---|---|
| W | LOCK | 5.0x 5.0 | Ctr | Ctr | 0.84 |
| B | LOCK | 7.0x 8.0 | -0.5 | Ctr | 0.87 |
| P | LOCK | 4.0x 6.0 | Ctr | Ctr | 0.46 |
| Q | LOCK | 4.0x 6.0 | Ctr | Ctr | 0.46 |
| R | LOCK | 6.0x 6.0 | Ctr | 1.2 | 0.68 |
| S | LOCK | 2.0x 4.0 | Ctr | Ctr | 0.51 |
| T | LOCK | 6.0x 6.0 | Ctr | 1.2 | 0.68 |
| U | LOCK | 4.0x 6.0 | Ctr | Ctr | 0.46 |
| C | LOCK | 7.0x 8.0 | 0.5 | Ctr | 0.87 |
| V | LOCK | 2.0x 4.0 | Ctr | Ctr | 0.51 |
| D | LOCK | 4.0x 6.0 | Ctr | Ctr | 0.83 |
| X | LOCK | 3.0x 7.0 | Ctr | Ctr | 0.59 |
| F | LOCK | 4.0x 6.0 | Ctr | Ctr | 0.55 |
| M | LOCK | 4.0x 6.0 | Ctr | Ctr | 0.52 |
| L | LOCK | 6.0x 6.0 | Ctr | -1.2 | 0.68 |
| K | LOCK | 4.0x 6.0 | Ctr | Ctr | 0.46 |
| J | LOCK | 6.0x 8.0 | Ctr | -1.2 | 0.72 |
| I | LOCK | 4.0x 6.0 | Ctr | Ctr | 0.46 |
| H | LOCK | 6.0x 6.0 | Ctr | -1.2 | 0.68 |
| E | LOCK | 4.0x 6.0 | Ctr | Ctr | 0.46 |

REVIEWED BY:
Robbins Engineering, Inc.
PO Box 280055
Tampa, FL 33682

REFER TO ROBBINS ENG. GENERAL NOTES AND SYMBOLS SHEET FOR ADDITIONAL SPECIFICATIONS.

NOTES:
Trusses Manufactured by:
Mayo Truss Co. Inc.
Analysis Conforms To:
FBC2004
3 COMPLETE TRUSSES REQUIRED.
Fasten together in staggered pattern. (1/2" bolts -OR- SDS4.5 screws -OR- 16d nails as each layer is applied.)

| | Rows | Nails | Screws | Bolts |
|---|---|---|---|---|
| | | ----Spacing (In)---- | | |
| TC | 1 | 12 | 24 | 0 |
| BC | 2 | 12 | 24 | 0 |
| WB | 1 | 8 | 8 | |

No bolts in 2x4s or smaller.
OH Loading
Soffit psf 2.0
Design checked for 10 psf non-concurrent LL on BC.
Prevent truss rotation at all bearing locations.
Wind Loads - ANSI / ASCE 7-02
Truss is designed as a Main Wind-Force Resistance System.
Wind Speed: 110 mph
Mean Roof Height: 15-0
Exposure Category: B
Occupancy Factor : 1.00
Building Type: Enclosed
Zone location: Exterior

Truss Design Engineer: Philip J. O'Regan
License #: 58126
Address: P.O. Box 280055, Tampa, FL 33682

PHILIP J. O'REGAN
LICENSE
No. 58126
STATE OF FLORIDA
PROFESSIONAL ENGINEER



Date Sealed: 8/28/2006

| Job | Mark | Quan | Type | Span | P1-H1 | Left OH | Right OH | Engineering |
|---|---|---|---|---|---|---|---|---|
| whitt-bohlmann | A19 | 1*3P | HIPP | 460000 | 6 | 0 | 2- 0- 0 | T06082949 |

U# J#whitt-bohlmann BOHLMANN

TC Dead Load : 5.0 psf
BC Dead Load : 5.0 psf
Max comp. force 14096 Lbs
Quality Control Factor 1.25

| Job | Mark | Quan | Type | Span | P1-H1 | Left OH | Right OH | Engineering |
|---|---|---|---|---|---|---|---|---|
| Whitt-bohlmann | A21 | 1*2P | SP | 290800 | 6 | 0 | 2- 0- 0 | T06082949 |

U# J#whitt-bohlmann BOHLMANN

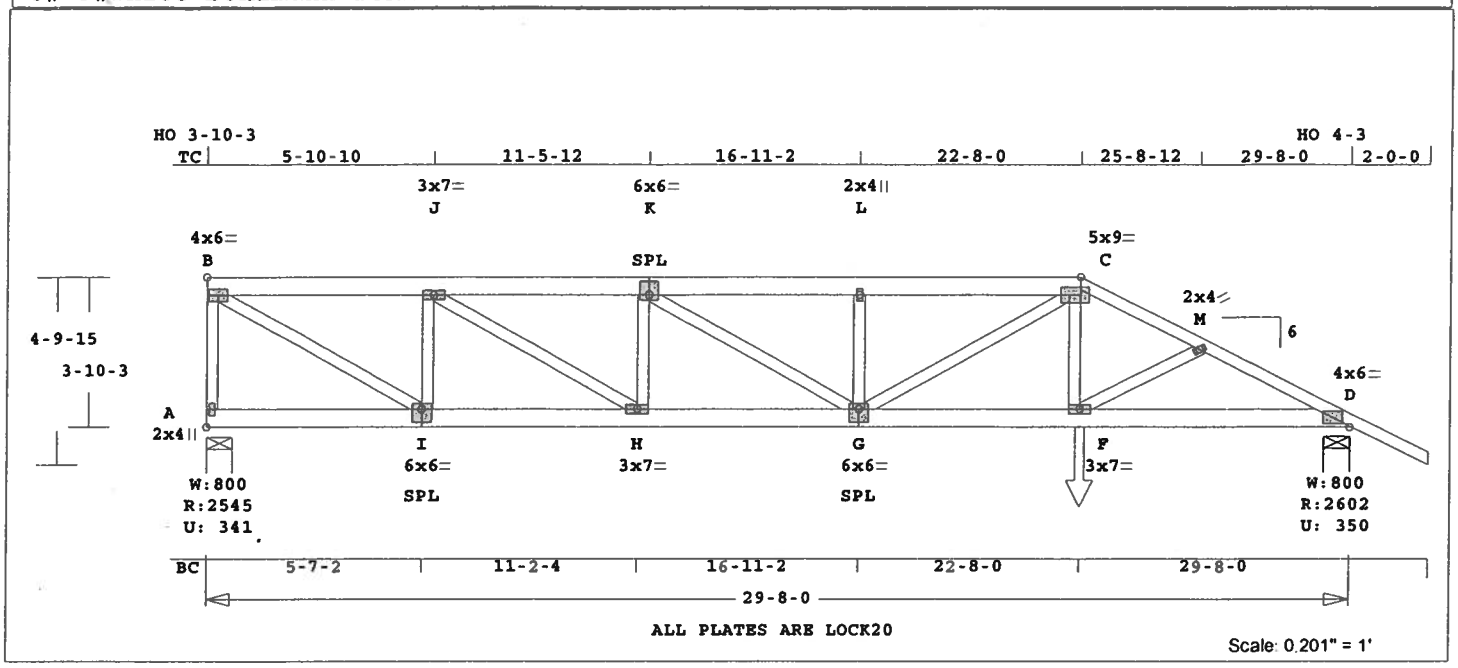


Robbins Engineering, Inc./Online Plus™ APPROX. TRUSS WEIGHT: 247.7 LBS

Online Plus -- Version 19.0.034
RUN DATE: 26-AUG-06
**********
* 2-Ply Truss *
**********

| | CSI | -Size- | ----Lumber---- |
|---|---|---|---|
| TC | 0.24 | 2x 6 | SP-#2 |
| EX C | -D | 2x 4 | SP-#2 |
| BC | 0.43 | 2x 6 | SP-#2 |
| WB | 0.40 | 2x 4 | SP-#2 |

Brace truss as follows:

| O.C. | From | To |
|---|---|---|
| TC Cont. | 0- 0- 0 | 29- 8- 0 |
| BC Cont. | 0- 0- 0 | 29- 8- 0 |

| Loading | Live | Dead | (psf) |
|---|---|---|---|
| TC | 20.0 | 10.0 | |
| BC | 0.0 | 10.0 | |
| Total | 20.0 | 20.0 | 40.0 |
| Spacing | | | 24.0" |

Lumber Duration Factor 1.25
Plate Duration Factor 1.25
TC Fb=1.00 Fc=1.00 Ft=1.00
BC Fb=1.00 Fc=1.00 Ft=1.00

Load Case # 1 Girder Loading
Lumber Duration Factor 1.25
Plate Duration Factor 1.25

| plf - | Live | Dead | From | To |
|---|---|---|---|---|
| TC V | 40 | 20 | 0.0' | 29.7' |
| BC V | 0 | 20 | 0.0' | 29.7' |
| TC V | 50 | 25 | 1.0' | 22.7' |
| TC V | -40 | -20 | 0.0' | 1.0' |
| BC V | 0 | 25 | 1.0' | 22.7' |
| BC V | 0 | -20 | 0.0' | 1.0' |
| BC V | 280 | 280 | 22.7' | CL-LB |

Plus 6 Wind Load Case(s)
Plus 1 UBC LL Load Case(s)

| Jt | React Lbs | Uplft Lbs | Size In-Sx | Req'd In-Sx |
|---|---|---|---|---|
| A | 2546 | 341 | 8- 0 | 1- 8 |
| | | | Hz = | -117 |
| D | 2602 | 350 | 8- 0 | 1- 9 |
| | | | Hz = | 56 |

| Membr | CSI | P Lbs | Axl-CSI-Bnd |
|---|---|---|---|
| ----------Top Chords---------- | | | |
| B -J | 0.18 | 3728 C | 0.01 0.17 |
| J -K | 0.19 | 5639 C | 0.02 0.17 |
| K -L | 0.21 | 5998 C | 0.03 0.18 |
| L -C | 0.24 | 5998 C | 0.03 0.21 |
| C -M | 0.30 | 4873 C | 0.04 0.26 |
| M -D | 0.16 | 4966 C | 0.05 0.11 |
| --------Bottom Chords-------- | | | |
| A -I | 0.09 | 92 T | 0.00 0.09 |
| I -H | 0.30 | 3728 T | 0.24 0.06 |
| H -G | 0.43 | 5639 T | 0.37 0.06 |
| G -F | 0.37 | 4378 T | 0.29 0.08 |
| F -D | 0.37 | 4421 T | 0.29 0.08 |
| ----------Webs---------- | | | |
| A -B | 0.12 | 2467 C | WindLd |
| B -I | 0.40 | 4359 T | |
| I -J | 0.09 | 1989 C | |
| J -H | 0.20 | 2235 T | |
| H -K | 0.04 | 926 C | |
| K -G | 0.03 | 419 T | |
| G -L | 0.04 | 860 C | |
| G -C | 0.17 | 1866 T | |
| F -C | 0.06 | 774 T | |
| F -M | 0.00 | 71 T | |

TL Defl -0.23" in H -G L/999
LL Defl -0.11" in H -G L/999
Shear // Grain in L -C 0.19

Plates for each ply each face.
PLATING CONFORMS TO TPI.
REPORT: NER 691
ROBBINS ENGINEERING, INC.
BASED ON SP LUMBER
USING GROSS AREA TEST.
Plate - LOCK 20 Ga, Gross Area
Plate - RHS 20 Ga, Gross Area

| Jt | Type | Plt Size | X | Y | JSI |
|---|---|---|---|---|---|
| B | LOCK | 4.0x 6.0 | Ctr | Ctr | 0.81 |
| J | LOCK | 3.0x 7.0 | Ctr | Ctr | 0.40 |
| K | LOCK | 6.0x 6.0 | Ctr | 1.2 | 0.55 |
| L | LOCK | 2.0x 4.0 | Ctr | Ctr | 0.41 |
| C | LOCK | 5.0x 9.0 | Ctr | Ctr | 1.00 |
| M | LOCK | 2.0x 4.0 | Ctr | Ctr | 0.41 |
| D | LOCK | 4.0x 6.0 | Ctr | Ctr | 0.66 |
| A | LOCK | 2.0x 4.0 | Ctr | Ctr | 0.69 |
| I | LOCK | 6.0x 6.0 | Ctr | -1.2 | 0.73 |
| H | LOCK | 3.0x 7.0 | Ctr | Ctr | 0.40 |
| G | LOCK | 6.0x 6.0 | Ctr | -1.2 | 0.75 |
| F | LOCK | 3.0x 7.0 | Ctr | Ctr | 0.42 |

REVIEWED BY:
Robbins Engineering, Inc.
PO Box 280055
Tampa, FL 33682

REFER TO ROBBINS ENG. GENERAL NOTES AND SYMBOLS SHEET FOR ADDITIONAL SPECIFICATIONS.

NOTES:
Trusses Manufactured by:
Mayo Truss Co. Inc.
Analysis Conforms To:
FBC2004
Girder Half Hip
Framing King Jacks
Jack Open Faced
Setback 7- 0- 0
2 COMPLETE TRUSSES REQUIRED.
Fasten together in staggered pattern. (1/2" bolts -OR- SDS3 screws -OR- 10d nails as each layer is applied.)

| | Rows | Nails | Screws | Bolts |
|---|---|---|---|---|
| | | ----Spacing (In)---- | | |
| TC | 1 | 12 | 24 | 0 |
| BC | 2 | 12 | 24 | 0 |
| WB | 1 | 8 | 8 | |

Plus clusters of nails where shown.
OH Loading
Soffit psf 2.0
Design checked for 10 psf non-concurrent LL on BC.
Prevent truss rotation at all bearing locations.
Wind Loads - ANSI / ASCE 7-02
Truss is designed as a Main Wind-Force Resistance System.
Wind Speed: 110 mph
Mean Roof Height: 15-0
Exposure Category: B
Occupancy Factor : 1.00
Building Type: Enclosed
Zone location: Exterior
TC Dead Load : 5.0 psf
BC Dead Load : 5.0 psf
Max comp. force 5998 Lbs
Quality Control Factor 1.25

Truss Design Engineer: Philip J. O'Regan
License #: 58126
Address: P.O. Box 280055, Tampa, FL 33682

PHILIP J. O'REGAN
LICENSE
No. 58126
STATE OF FLORIDA
PROFESSIONAL ENGINEER



Date Sealed: 8/28/2006

| Job | Mark | Quan | Type | Span | P1-H1 | Left OH | Right OH | Engineering |
|---|---|---|---|---|---|---|---|---|
| whitt-bohlmann | B1 | 6 | TR | 220308 | 6 | 2- 0- 0 | 0 | T06082949 |

U# J#whitt-bohlmann BOHLMANN

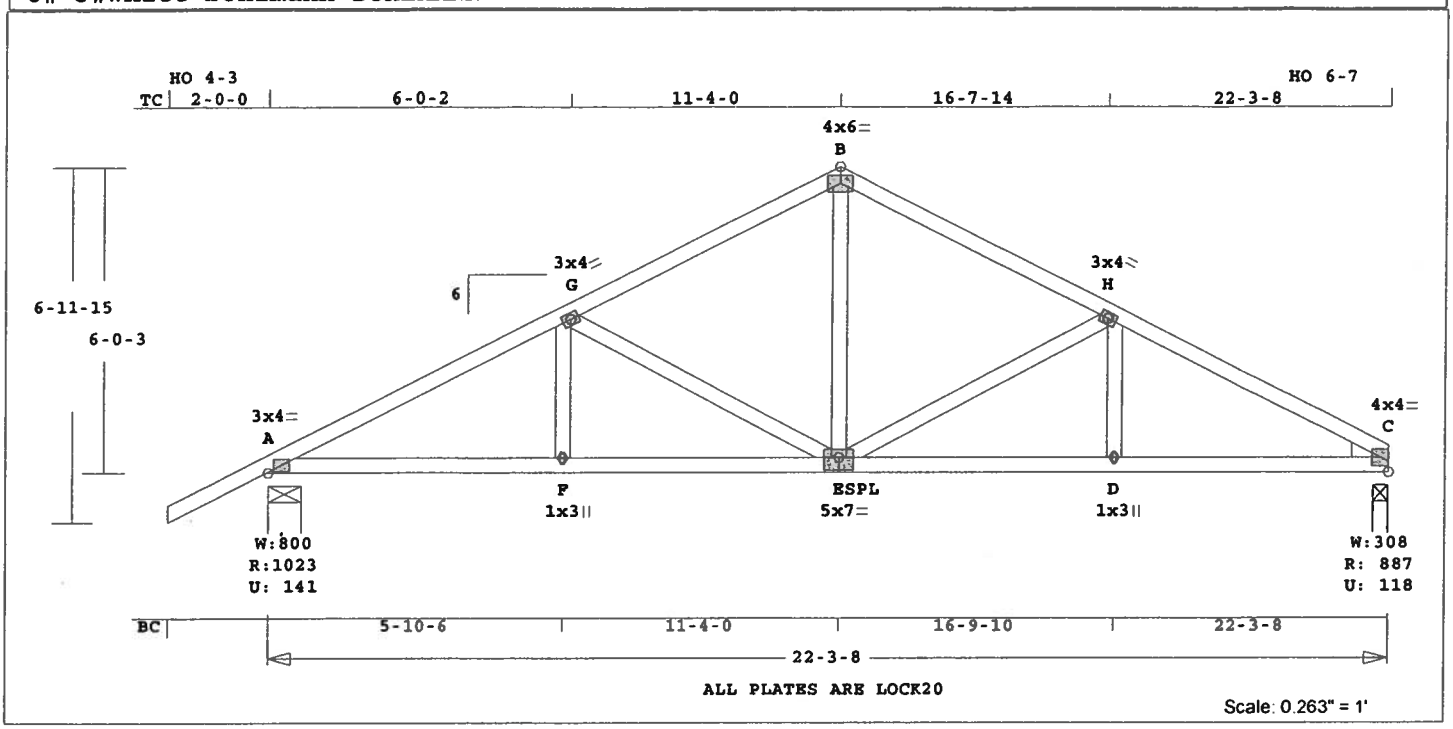


Robbins Engineering, Inc./Online Plus™ APPROX. TRUSS WEIGHT: 137.7 LBS

Online Plus -- Version 19.0.034
RUN DATE: 26-AUG-06

| | CSI | -Size- | ----Lumber---- |
|---|---|---|---|
| TC | 0.29 | 2x 4 | SP-#2 |
| BC | 0.37 | 2x 4 | SP-#2 |
| WB | 0.23 | 2x 4 | SP-#2 |
| PB | --- | 2x 4 | SP-#2 |

Brace truss as follows:

| O.C. | From | To |
|---|---|---|
| TC Cont. | 0- 0- 0 | 22- 3- 8 |
| BC Cont. | 0- 0- 0 | 22- 3- 8 |

| Loading | Live | Dead | (psf) |
|---|---|---|---|
| TC | 20.0 | 10.0 | |
| BC | 0.0 | 10.0 | |
| Total | 20.0 | 20.0 | 40.0 |
| Spacing | | | 24.0" |

Lumber Duration Factor 1.25
Plate Duration Factor 1.25
TC Fb=1.15 Fc=1.10 Ft=1.10
BC Fb=1.10 Fc=1.10 Ft=1.10

Plus 6 Wind Load Case(s)
Plus 1 UBC LL Load Case(s)

| Jt | React Lbs | Uplft Lbs | Size In-Sx | Req'd In-Sx |
|---|---|---|---|---|
| A | 1024 | 142 | 8- 0 | 1- 8 |
| | | | Hz = | -105 |
| C | 888 | 118 | 3- 8 | 1- 8 |
| | | | Hz = | 106 |

| Membr | CSI | P Lbs | Axl-CSI-Bnd | |
|---|---|---|---|---|
| ----------Top Chords---------- | | | | |
| A -G | 0.29 | 1477 C | 0.01 | 0.28 |
| G -B | 0.28 | 994 C | 0.00 | 0.28 |
| B -H | 0.22 | 992 C | 0.00 | 0.22 |
| H -C | 0.27 | 1420 C | 0.01 | 0.26 |
| --------Bottom Chords--------- | | | | |
| A -F | 0.32 | 1327 T | 0.22 | 0.10 |
| F -E | 0.32 | 1327 T | 0.22 | 0.10 |
| E -D | 0.31 | 1265 T | 0.21 | 0.10 |
| D -C | 0.37 | 1265 T | 0.21 | 0.16 |
| ----------Webs---------- | | | | |
| F -G | 0.03 | 223 T | | |
| G -E | 0.23 | 503 C | | |
| E -B | 0.10 | 567 T | | |
| E -H | 0.20 | 433 C | | |
| D -H | 0.03 | 197 T | | |

TL Defl -0.11" in E -D L/999
LL Defl -0.05" in E -D L/999
Shear // Grain in A -G 0.20

Plates for each ply each face.
PLATING CONFORMS TO TPI.
REPORT: NER 691
ROBBINS ENGINEERING, INC.
BASED ON SP LUMBER
USING GROSS AREA TEST.
Plate - LOCK 20 Ga, Gross Area
Plate - RHS 20 Ga, Gross Area

| Jt | Type | Plt Size | X | Y | JSI |
|---|---|---|---|---|---|
| A | LOCK | 3.0x 4.0 | Ctr | Ctr | 0.80 |
| G | LOCK | 3.0x 4.0 | Ctr | Ctr | 0.60 |
| B | LOCK | 4.0x 6.0 | Ctr | Ctr | 0.57 |
| H | LOCK | 3.0x 4.0 | Ctr | Ctr | 0.60 |
| C | LOCK | 4.0x 4.0 | -1.0 | 0.3 | 0.83 |
| F | LOCK | 1.0x 3.0 | Ctr | Ctr | 0.81 |
| E | LOCK | 5.0x 7.0 | Ctr | -0.5 | 0.60 |
| D | LOCK | 1.0x 3.0 | Ctr | Ctr | 0.81 |

REVIEWED BY:
Robbins Engineering, Inc.
PO Box 280055
Tampa, FL 33682

REFER TO ROBBINS ENG. GENERAL NOTES AND SYMBOLS SHEET FOR ADDITIONAL SPECIFICATIONS.

NOTES:
Trusses Manufactured by:
Mayo Truss Co. Inc.
Analysis Conforms To:
FBC2004
OH Loading
Soffit psf 2.0

Design checked for 10 psf non-concurrent LL on BC.
Wind Loads - ANSI / ASCE 7-02
Truss is designed as a Main Wind-Force Resistance System.
Wind Speed: 110 mph
Mean Roof Height: 15-0
Exposure Category: B
Occupancy Factor : 1.00
Building Type: Enclosed
Zone location: Exterior
TC Dead Load : 5.0 psf
BC Dead Load : 5.0 psf
Max comp. force 1477 Lbs
Quality Control Factor 1.25

Truss Design Engineer: Philip J. O'Regan
License #: 58126
Address: P.O. Box 280055, Tampa, FL 33682

PHILIP J. O'REGAN
LICENSE
No. 58126
STATE OF
FLORIDA
PROFESSIONAL ENGINEER



Date Scaled: 8/28/2006

| Job | Mark | Quan | Type | Span | Pl-Hl | Left OH | Right OH | Engineering |
|---|---|---|---|---|---|---|---|---|
| whitt-bohlmann | B2 | 1 | TR | 220308 | 6 | 2- 0- 0 | 0 | T06082949 |

U# J#whitt-bohlmann BOHLMANN

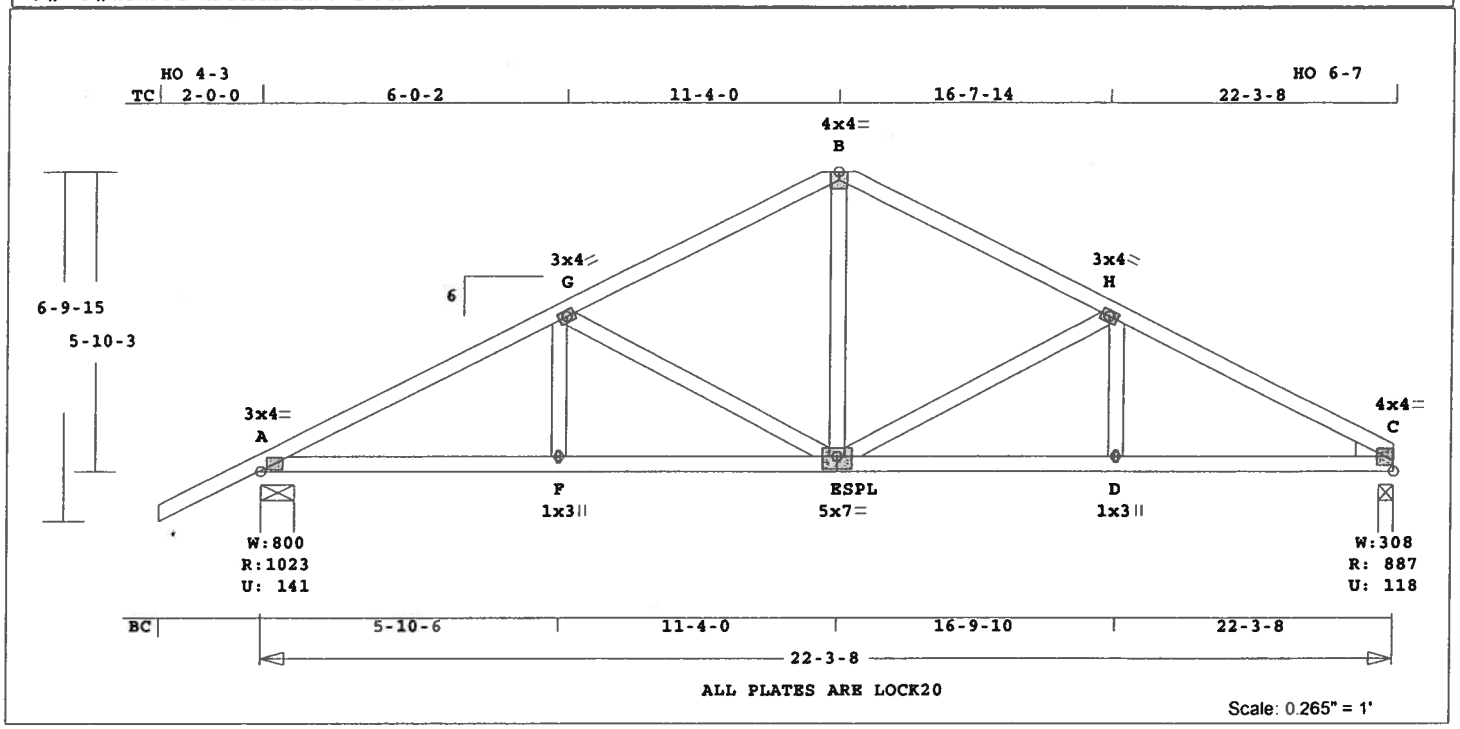


Robbins Engineering, Inc./Online Plus™ APPROX. TRUSS WEIGHT: 137.4 LBS

Online Plus -- Version 19.0.034
RUN DATE: 26-AUG-06

| | CSI | -Size- | ----Lumber---- |
|---|---|---|---|
| TC | 0.29 | 2x 4 | SP-#2 |
| BC | 0.37 | 2x 4 | SP-#2 |
| WB | 0.23 | 2x 4 | SP-#2 |
| PB | --- | 2x 4 | SP-#2 |

Brace truss as follows:

| | O.C. | From | To |
|---|---|---|---|
| TC Cont. | | 0- 0- 0 | 22- 3- 8 |
| BC Cont. | | 0- 0- 0 | 22- 3- 8 |

| Loading | Live | Dead | (psf) |
|---|---|---|---|
| TC | 20.0 | 10.0 | |
| BC | 0.0 | 10.0 | |
| Total | 20.0 | 20.0 | 40.0 |
| Spacing | | | 24.0" |

Lumber Duration Factor 1.25
Plate Duration Factor 1.25
TC Fb=1.15 Fc=1.10 Ft=1.10
BC Fb=1.10 Fc=1.10 Ft=1.10

Plus 6 Wind Load Case(s)
Plus 1 UBC LL Load Case(s)

| Jt | React Lbs | Uplft Lbs | Size In-Sx | Req'd In-Sx |
|---|---|---|---|---|
| A | 1024 | 142 | 8- 0 | 1- 8 |
| | | | Hz = | -105 |
| C | 888 | 118 | 3- 8 | 1- 8 |
| | | | Hz = | 106 |

| Membr | CSI | P Lbs | Axl | CSI | Bnd |
|---|---|---|---|---|---|
| ----------Top Chords---------- | | | | | |
| A -G | 0.29 | 1477 | C | 0.01 | 0.28 |
| G -B | 0.28 | 994 | C | 0.00 | 0.28 |
| B -H | 0.22 | 992 | C | 0.00 | 0.22 |
| H -C | 0.27 | 1420 | C | 0.01 | 0.26 |
| --------Bottom Chords--------- | | | | | |
| A -F | 0.32 | 1327 | T | 0.22 | 0.10 |
| F -E | 0.32 | 1327 | T | 0.22 | 0.10 |
| E -D | 0.31 | 1265 | T | 0.21 | 0.10 |
| D -C | 0.37 | 1265 | T | 0.21 | 0.16 |
| ----------Webs---------- | | | | | |
| F -G | 0.03 | 223 | T | | |
| G -E | 0.23 | 503 | C | | |
| E -B | 0.10 | 567 | T | | |
| E -H | 0.20 | 433 | C | | |
| D -H | 0.03 | 197 | T | | |

TL Defl -0.11" in E -D L/999
LL Defl -0.05" in E -D L/999
Shear // Grain in A -G 0.20

Plates for each ply each face.
PLATING CONFORMS TO TPI.
REPORT: NER 691
ROBBINS ENGINEERING, INC.
BASED ON SP LUMBER
USING GROSS AREA TEST.
Plate - LOCK 20 Ga, Gross Area
Plate - RHS 20 Ga, Gross Area

| Jt | Type | Plt Size | X | Y | JSI |
|---|---|---|---|---|---|
| A | LOCK | 3.0x 4.0 | Ctr | Ctr | 0.80 |
| G | LOCK | 3.0x 4.0 | Ctr | Ctr | 0.60 |
| B | LOCK | 4.0x 4.0 | Ctr | -0.1 | 0.69 |
| H | LOCK | 3.0x 4.0 | Ctr | Ctr | 0.60 |
| C | LOCK | 4.0x 4.0 | -1.0 | 0.3 | 0.83 |
| F | LOCK | 1.0x 3.0 | Ctr | Ctr | 0.81 |
| E | LOCK | 5.0x 7.0 | Ctr | -0.5 | 0.60 |
| D | LOCK | 1.0x 3.0 | Ctr | Ctr | 0.81 |

REVIEWED BY:
Robbins Engineering, Inc.
PO Box 280055
Tampa, FL 33682

REFER TO ROBBINS ENG. GENERAL NOTES AND SYMBOLS SHEET FOR ADDITIONAL SPECIFICATIONS.

NOTES:
Trusses Manufactured by:
Mayo Truss Co. Inc.
Analysis Conforms To:
FBC2004
OH Loading
Soffit psf 2.0

Design checked for 10 psf non-concurrent LL on BC.
Wind Loads - ANSI / ASCE 7-02
Truss is designed as a Main Wind-Force Resistance System.
Wind Speed: 110 mph
Mean Roof Height: 15-0
Exposure Category: B
Occupancy Factor : 1.00
Building Type: Enclosed
Zone location: Exterior
TC Dead Load : 5.0 psf
BC Dead Load : 5.0 psf
Max comp. force 1477 Lbs
Quality Control Factor 1.25

Truss Design Engineer: Philip J. O'Regan
License #: 58126
Address: P.O. Box 280055, Tampa, FL 33682

PHILIP J. O'REGAN
LICENSE
No. 58126
STATE OF FLORIDA
PROFESSIONAL ENGINEER

Date Sealed: 8/28/2006

| Job | Mark | Quan | Type | Span | Pl-Hl | Left OH | Right OH | Engineering |
|---|---|---|---|---|---|---|---|---|
| whitt-bohlmann | B3 | 1 | HIPP | 220308 | 6 | 2- 0- 0 | 0 | T06082949 |

U# J#whitt-bohlmann BOHLMANN

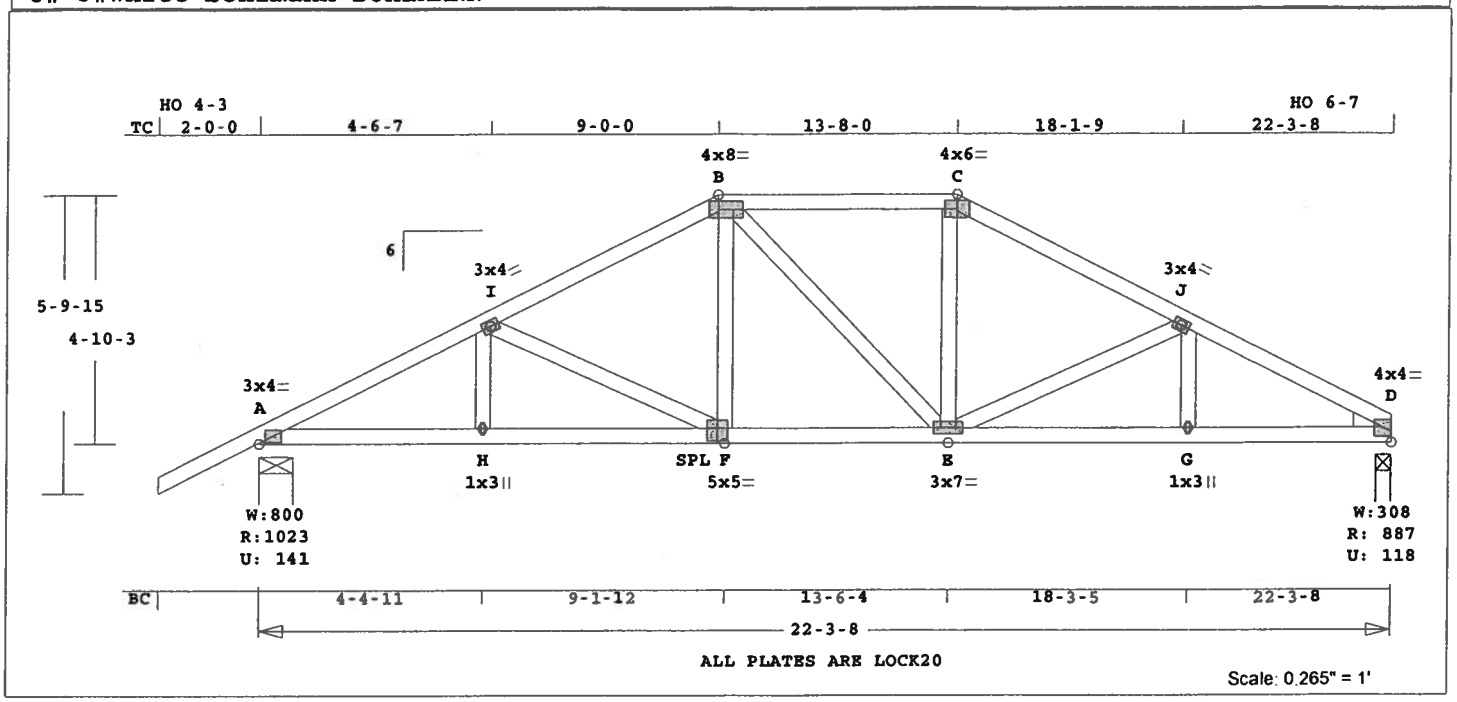


Robbins Engineering, Inc./Online Plus™ APPROX. TRUSS WEIGHT: 147.3 LBS

Online Plus -- Version 19.0.034
RUN DATE: 26-AUG-06

| | CSI | -Size- | ----Lumber---- |
|---|---|---|---|
| TC | 0.25 | 2x 4 | SP-#2 |
| BC | 0.42 | 2x 4 | SP-#2 |
| WB | 0.12 | 2x 4 | SP-#2 |
| PB | --- | 2x 4 | SP-#2 |

Brace truss as follows:

| O.C. | From | To |
|---|---|---|
| TC Cont. | 0- 0- 0 | 22- 3- 8 |
| BC Cont. | 0- 0- 0 | 22- 3- 8 |

| Loading | Live | Dead | (psf) |
|---|---|---|---|
| TC | 20.0 | 10.0 | |
| BC | 0.0 | 10.0 | |
| Total | 20.0 | 20.0 | 40.0 |
| Spacing | | | 24.0" |

Lumber Duration Factor 1.25
Plate Duration Factor 1.25
TC Fb=1.15 Fc=1.10 Ft=1.10
BC Fb=1.10 Fc=1.10 Ft=1.10

Plus 6 Wind Load Case(s)
Plus 1 UBC LL Load Case(s)

| Jt | React Lbs | Uplft Lbs | Size In-Sx | Req'd In-Sx |
|---|---|---|---|---|
| A | 1024 | 142 | 8- 0 | 1- 8 |
| | | | Hz = | -83 |
| D | 888 | 118 | 3- 8 | 1- 8 |
| | | | Hz = | 84 |

| Membr | CSI | P Lbs | Axl | CSI | Bnd |
|---|---|---|---|---|---|
| ----------Top Chords---------- | | | | | |
| A -I | 0.13 | 1554 | C | 0.01 | 0.12 |
| I -B | 0.15 | 1178 | C | 0.00 | 0.15 |
| B -C | 0.17 | 1047 | C | 0.00 | 0.17 |
| C -J | 0.18 | 1167 | C | 0.01 | 0.17 |
| J -D | 0.25 | 1464 | C | 0.01 | 0.24 |
| --------Bottom Chords--------- | | | | | |
| A -H | 0.27 | 1390 | T | 0.23 | 0.04 |
| H -F | 0.30 | 1390 | T | 0.23 | 0.07 |
| F -E | 0.25 | 1050 | T | 0.17 | 0.08 |
| E -G | 0.30 | 1297 | T | 0.21 | 0.09 |
| G -D | 0.42 | 1297 | T | 0.21 | 0.21 |
| ----------Webs---------- | | | | | |
| H -I | 0.02 | 170 | T | | |
| I -F | 0.12 | 369 | C | | |
| F -B | 0.04 | 298 | T | | |
| B -E | 0.03 | 63 | C | | |
| E -C | 0.04 | 282 | T | | |
| E -J | 0.09 | 276 | C | | |
| G -J | 0.02 | 134 | T | | |

TL Defl -0.11" in E -G L/999
LL Defl -0.05" in E -G L/999
Shear // Grain in J -D 0.17

Plates for each ply each face.
PLATING CONFORMS TO TPI.
REPORT: NER 691
ROBBINS ENGINEERING, INC.
BASED ON SP LUMBER
USING GROSS AREA TEST.
Plate - LOCK 20 Ga, Gross Area
Plate - RHS 20 Ga, Gross Area

| Jt | Type | Plt Size | X | Y | JSI |
|---|---|---|---|---|---|
| A | LOCK | 3.0x 4.0 | Ctr | Ctr | 0.80 |
| I | LOCK | 3.0x 4.0 | Ctr | Ctr | 0.60 |
| B | LOCK | 4.0x 8.0 | Ctr | Ctr | 0.90 |
| C | LOCK | 4.0x 6.0 | Ctr | Ctr | 0.90 |
| J | LOCK | 3.0x 4.0 | Ctr | Ctr | 0.60 |
| D | LOCK | 4.0x 4.0 | -1.0 | 0.3 | 0.83 |
| H | LOCK | 1.0x 3.0 | Ctr | Ctr | 0.81 |
| F | LOCK | 5.0x 5.0 | Ctr | -0.5 | 0.60 |
| E | LOCK | 3.0x 7.0 | Ctr | Ctr | 0.52 |
| G | LOCK | 1.0x 3.0 | Ctr | Ctr | 0.81 |

REVIEWED BY:
Robbins Engineering, Inc.
PO Box 280055
Tampa, FL 33682

REFER TO ROBBINS ENG. GENERAL NOTES AND SYMBOLS SHEET FOR ADDITIONAL SPECIFICATIONS.

NOTES:
Trusses Manufactured by:
Mayo Truss Co. Inc.

Analysis Conforms To:
FBC2004
OH Loading
Soffit psf 2.0
Design checked for 10 psf non-concurrent LL on BC.
Wind Loads - ANSI / ASCE 7-02
Truss is designed as a Main Wind-Force Resistance System.
Wind Speed: 110 mph
Mean Roof Height: 15-0
Exposure Category: B
Occupancy Factor : 1.00
Building Type: Enclosed
Zone location: Exterior
TC Dead Load : 5.0 psf
BC Dead Load : 5.0 psf
Max comp. force 1554 Lbs
Quality Control Factor 1.25

Truss Design Engineer: Philip J. O'Regan
License #: 58126
Address: P.O. Box 280055, Tampa, FL 33682

PHILIP J. O'REGAN
LICENSE
No. 58126
STATE OF FLORIDA
PROFESSIONAL ENGINEER

Date Sealed: 8/28/2006

| Job | Mark | Quan | Type | Span | Pl-H1 | Left OH | Right OH | Engineering |
|---|---|---|---|---|---|---|---|---|
| Whitt-bohlmann | B4 | 1 | HIPP | 220800 | 6 | 2- 0- 0 | 2- 0- 0 | T06082949 |

U# J#whitt-bohlmann BOHLMANN

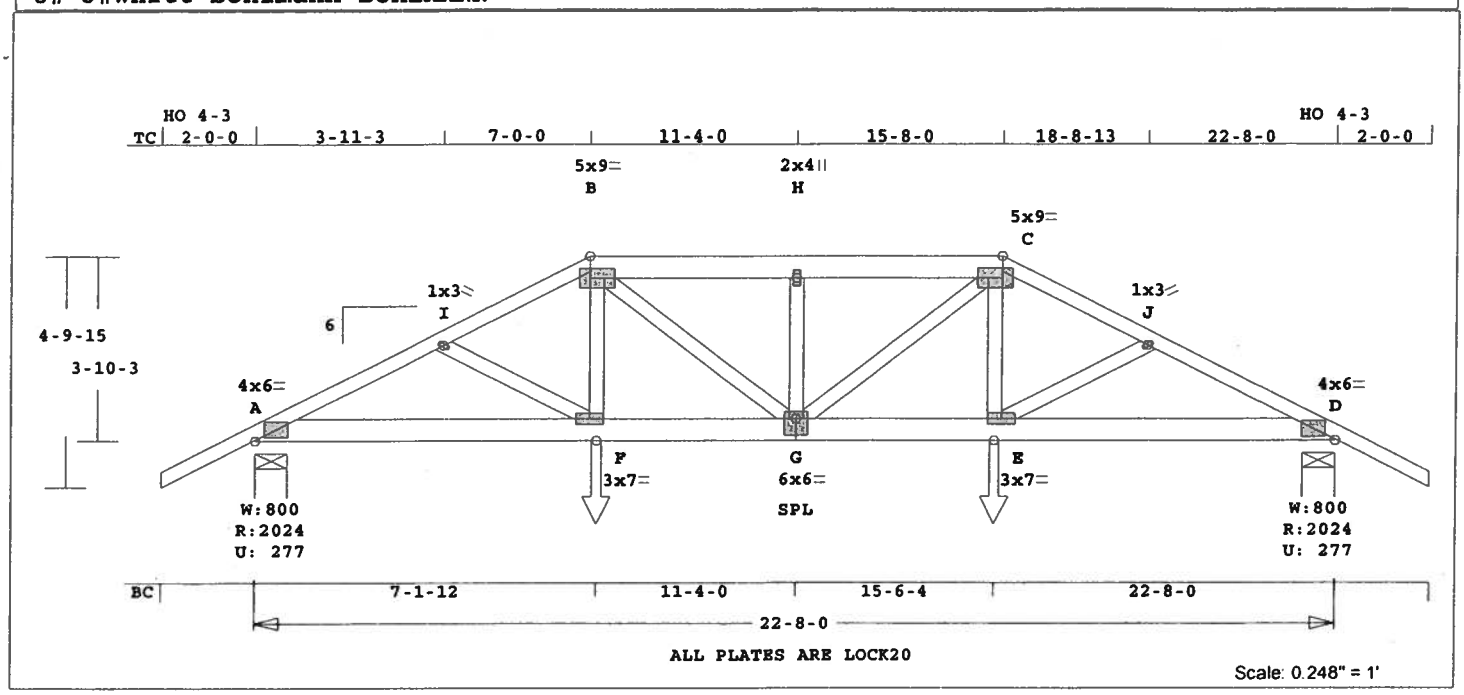


Robbins Engineering, Inc./Online Plus™ APPROX. TRUSS WEIGHT: 175.7 LBS

Online Plus -- Version 19.0.034
RUN DATE: 26-AUG-06

| CSI | -Size- | ----Lumber---- |
|---|---|---|
| TC 0.54 | 2x 4 | SP-#2 |
| EX B -C | 2x 6 | SP-#2 |
| BC 0.60 | 2x 6 | SP-#2 |
| WB 0.15 | 2x 4 | SP-#2 |

Brace truss as follows:

| O.C. | From | To |
|---|---|---|
| TC Cont. | 0- 0- 0 | 22- 8- 0 |
| BC Cont. | 0- 0- 0 | 22- 8- 0 |

| Loading | Live | Dead | (psf) |
|---|---|---|---|
| TC | 20.0 | 10.0 | |
| BC | 0.0 | 10.0 | |
| Total | 20.0 | 20.0 | 40.0 |
| Spacing | | | 24.0" |

Lumber Duration Factor 1.25
Plate Duration Factor 1.25
TC Fb=1.00 Fc=1.00 Ft=1.00
BC Fb=1.00 Fc=1.00 Ft=1.00

Load Case # 1 Girder Loading
Lumber Duration Factor 1.25
Plate Duration Factor 1.25

| plf - | Live | Dead | From | To |
|---|---|---|---|---|
| TC V | 40 | 20 | 0.0' | 22.7' |
| BC V | 0 | 20 | 0.0' | 22.7' |
| TC V | 50 | 25 | 7.0' | 15.7' |
| BC V | 0 | 25 | 7.1' | 15.5' |
| BC V | 280 | 280 | 7.1' | CL-LB |
| BC V | 280 | 280 | 15.5' | CL-LB |

Plus 6 Wind Load Case(s)
Plus 1 UBC LL Load Case(s)

| Jt | React Lbs | Uplft Lbs | Size In-Sx | Req'd In-Sx |
|---|---|---|---|---|
| A | 2024 | 277 | 8- 0 | 2- 6 |
| | | | Hz = | -64 |
| D | 2024 | 277 | 8- 0 | 2- 6 |
| | | | Hz = | 65 |

| Membr | CSI | P Lbs | Axl-CSI-Bnd | |
|---|---|---|---|---|
| ----------Top Chords---------- | | | | |
| A -I | 0.31 | 3706 C | 0.12 | 0.19 |
| I -B | 0.54 | 3582 C | 0.10 | 0.44 |
| B -H | 0.36 | 3902 C | 0.05 | 0.31 |
| H -C | 0.36 | 3902 C | 0.05 | 0.31 |
| C -J | 0.54 | 3582 C | 0.10 | 0.44 |
| J -D | 0.31 | 3706 C | 0.12 | 0.19 |
| --------Bottom Chords--------- | | | | |
| A -F | 0.60 | 3303 T | 0.44 | 0.16 |
| F -G | 0.53 | 3215 T | 0.43 | 0.10 |
| G -E | 0.53 | 3215 T | 0.43 | 0.10 |
| E -D | 0.60 | 3303 T | 0.44 | 0.16 |
| ----------Webs---------- | | | | |
| I -F | 0.01 | 78 T | | |
| F -B | 0.13 | 713 T | | |
| B -G | 0.15 | 865 T | | |
| G -H | 0.11 | 785 C | | |
| G -C | 0.15 | 865 T | | |
| E -C | 0.13 | 713 T | | |
| E -J | 0.01 | 78 T | | |

TL Defl -0.24" in G -E L/999
LL Defl -0.12" in G -E L/999
Shear // Grain in B -H 0.32

Plates for each ply each face.
PLATING CONFORMS TO TPI.
REPORT: NER 691
ROBBINS ENGINEERING, INC.
BASED ON SP LUMBER
USING GROSS AREA TEST.
Plate - LOCK 20 Ga, Gross Area
Plate - RHS 20 Ga, Gross Area

| Jt | Type | Plt Size | X | Y | JSI |
|---|---|---|---|---|---|
| A | LOCK | 4.0x 6.0 | Ctr | Ctr | 0.83 |
| I | LOCK | 1.0x 3.0 | Ctr | Ctr | 0.75 |
| B | LOCK | 5.0x 9.0 | Ctr | Ctr | 0.90 |
| H | LOCK | 2.0x 4.0 | Ctr | Ctr | 0.40 |
| C | LOCK | 5.0x 9.0 | Ctr | Ctr | 0.90 |
| J | LOCK | 1.0x 3.0 | Ctr | Ctr | 0.75 |
| D | LOCK | 4.0x 6.0 | Ctr | Ctr | 0.83 |
| F | LOCK | 3.0x 7.0 | Ctr | Ctr | 0.37 |
| G | LOCK | 6.0x 6.0 | Ctr | -1.2 | 0.72 |
| E | LOCK | 3.0x 7.0 | Ctr | Ctr | 0.37 |

REVIEWED BY:
Robbins Engineering, Inc.
PO Box 280055
Tampa, FL 33682

REFER TO ROBBINS ENG. GENERAL NOTES AND SYMBOLS SHEET FOR ADDITIONAL SPECIFICATIONS.

NOTES:
Trusses Manufactured by:
Mayo Truss Co. Inc.
Analysis Conforms To:
FBC2004
Girder Step Down Hip
Framing King Jacks
Jack Open Faced
Setback 7- 0- 0
OH Loading
Soffit psf 2.0
Design checked for 10 psf non-concurrent LL on BC.
Prevent truss rotation at all bearing locations.
Wind Loads - ANSI / ASCE 7-02
Truss is designed as a Main Wind-Force Resistance System.
Wind Speed: 110 mph
Mean Roof Height: 15-0
Exposure Category: B
Occupancy Factor : 1.00
Building Type: Enclosed
Zone location: Exterior
TC Dead Load : 5.0 psf
BC Dead Load : 5.0 psf
Max comp. force 3902 Lbs
Quality Control Factor 1.25

Truss Design Engineer: Philip J. O'Regan
License #: 58126
Address: P.O. Box 280055, Tampa, FL 33682

PHILIP J. O'REGAN
LICENSE
No. 58126
STATE OF
FLORIDA
PROFESSIONAL ENGINEER

Date Sealed: 8/28/2006

| Job | Mark | Quan | Type | Span | P1-H1 | Left OH | Right OH | Engineering |
|---|---|---|---|---|---|---|---|---|
| whitt-bohlmann | C1 | 1*2P | HIPP | 130800 | 6 | 2- 0- 0 | 2- 0- 0 | T06082949 |

U# J#whitt-bohlmann BOHLMANN

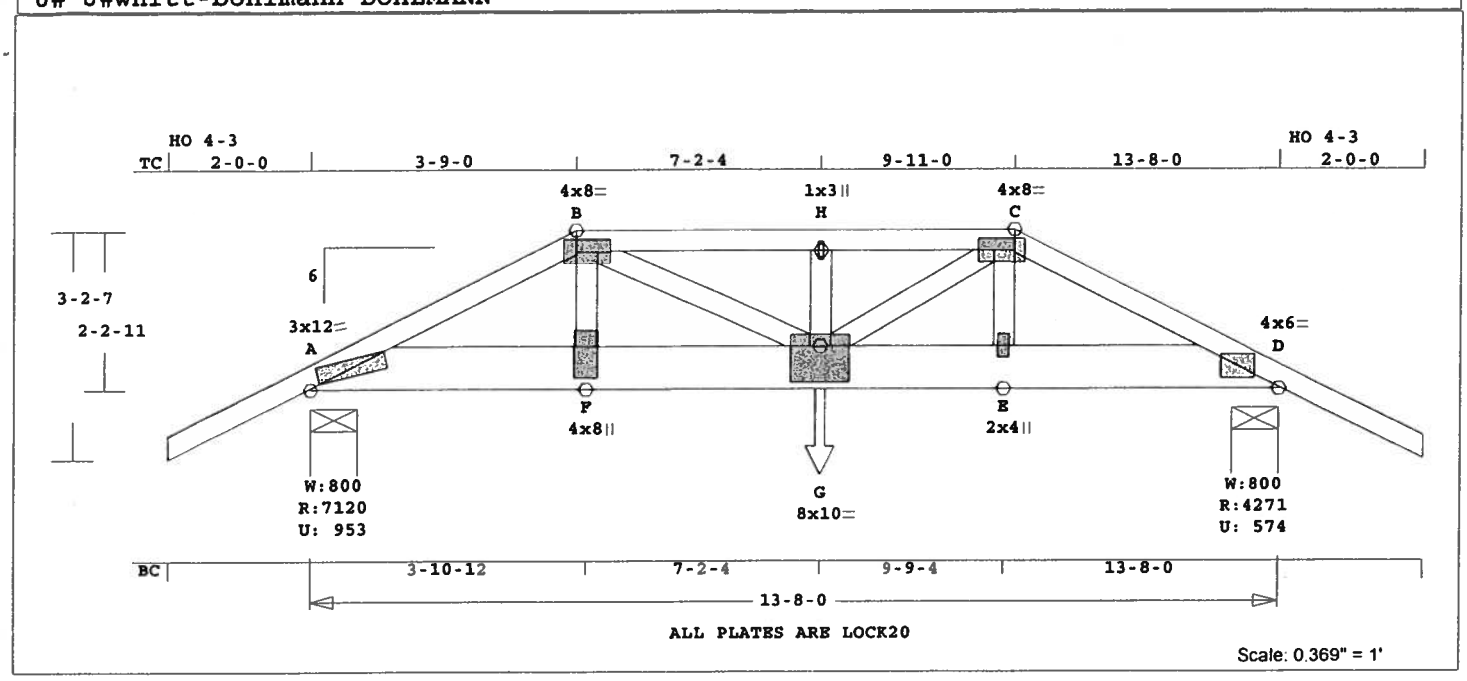


Robbins Engineering, Inc./Online Plus™ APPROX. TRUSS WEIGHT: 106.8 LBS

Online Plus -- Version 19.0.034
RUN DATE: 26-AUG-06
**********
* 2-Ply Truss *
**********

| | CSI | -Size- | ----Lumber---- |
|---|---|---|---|
| TC | 0.81 | 2x 4 | SP-#2 |
| BC | 0.90 | 2x 8 | SP-#1 |
| WB | 0.56 | 2x 4 | SP-#2 |

Brace truss as follows:

| O.C. | From | To |
|---|---|---|
| TC Cont. | 0- 0- 0 | 13- 8- 0 |
| BC Cont. | 0- 0- 0 | 13- 8- 0 |

| Loading | Live | Dead | (psf) |
|---|---|---|---|
| TC | 20.0 | 10.0 | |
| BC | 0.0 | 10.0 | |
| Total | 20.0 | 20.0 | 40.0 |
| Spacing | | | 24.0" |

Lumber Duration Factor 1.25
Plate Duration Factor 1.25
TC Fb=1.00 Fc=1.00 Ft=1.00
BC Fb=1.00 Fc=1.00 Ft=1.00

Load Case # 1 Standard Loading
Lumber Duration Factor 1.25
Plate Duration Factor 1.25

| plf - | Live | Dead | From | To |
|---|---|---|---|---|
| TC V | 40 | 20 | 0.0' | 13.7' |
| BC V | 0 | 20 | 0.0' | 13.7' |
| BC V | 440 | 440 | 0.0' | 6.7' |
| BC V | 2088 | 2088 | 7.2' | CL-LB |

Plus 6 Wind Load Case(s)
Plus 1 UBC LL Load Case(s)

| Jt | React Lbs | Uplft Lbs | Size In-Sx | Req'd In-Sx |
|---|---|---|---|---|
| A | 7121 | 954 | 8- 0 | 4- 3 |
| | | | Hz = | 41 |
| D | 4271 | 574 | 8- 0 | 2- 8 |
| | | | Hz = | 43 |

| Membr | CSI | P Lbs | Axl-CSI-Bnd |
|---|---|---|---|
| ----------Top Chords---------- | | | |
| A -B | 0.81 | 11604 C | 0.28 0.53 |
| B -H | 0.66 | 13100 C | 0.39 0.27 |
| H -C | 0.58 | 13100 C | 0.36 0.22 |
| C -D | 0.35 | 8875 C | 0.16 0.19 |
| --------Bottom Chords--------- | | | |
| A -F | 0.83 | 10542 T | 0.47 0.36 |
| F -G | 0.90 | 10307 T | 0.45 0.45 |
| G -E | 0.61 | 7977 T | 0.35 0.26 |
| E -D | 0.48 | 7989 T | 0.35 0.13 |
| ----------Webs---------- | | | |
| F -B | 0.29 | 3272 T | |
| B -G | 0.28 | 3131 T | |
| G -H | 0.01 | 167 T | |
| G -C | 0.56 | 6110 T | |
| E -C | 0.01 | 215 T | |

TL Defl -0.26" in F -G L/573
LL Defl -0.13" in F -G L/999
Shear // Grain in F -G 0.53

Plates for each ply each face.
PLATING CONFORMS TO TPI.
REPORT: NER 691
ROBBINS ENGINEERING, INC.
BASED ON SP LUMBER
USING GROSS AREA TEST.
Plate - LOCK 20 Ga, Gross Area
Plate - RHS 20 Ga, Gross Area

| Jt | Type | Plt Size | X | Y | JSI |
|---|---|---|---|---|---|
| A | LOCK | 3.0x12.0 | Ctr | Ctr | 0.82 |
| B | LOCK | 4.0x 8.0 | Ctr | Ctr | 0.96 |
| H | LOCK | 1.0x 3.0 | Ctr | Ctr | 0.75 |
| C | LOCK | 4.0x 8.0 | -0.5 | Ctr | 0.99 |
| D | LOCK | 4.0x 6.0 | Ctr | Ctr | 1.00 |
| F | LOCK | 4.0x 8.0 | Ctr | -1.3 | 0.88 |
| G | LOCK | 8.0x10.0 | Ctr | -2.1 | 0.89 |
| E | LOCK | 2.0x 4.0 | Ctr | Ctr | 0.38 |

REVIEWED BY:
Robbins Engineering, Inc.
PO Box 280055
Tampa, FL 33682

REFER TO ROBBINS ENG. GENERAL NOTES AND SYMBOLS SHEET FOR ADDITIONAL SPECIFICATIONS.

NOTES:
Trusses Manufactured by:
Mayo Truss Co. Inc.
Analysis Conforms To:
FBC2004
2 COMPLETE TRUSSES REQUIRED.

Fasten together in staggered pattern. (1/2" bolts -OR- SDS3 screws -OR- 10d nails as each layer is applied.)

| | Rows | Nails | Screws | Bolts |
|---|---|---|---|---|
| | | ----Spacing (In)---- | | |
| TC | 1 | 12 | 24 | 0 |
| BC | 2 | 8.5 | 16 | 0 |
| WB | 1 | 8 | 8 | |

Plus clusters of nails where shown.
OH Loading
Soffit psf 2.0
Design checked for 10 psf non-concurrent LL on BC.
Prevent truss rotation at all bearing locations.
Wind Loads - ANSI / ASCE 7-02
Truss is designed as a Main Wind-Force Resistance System.
Wind Speed: 110 mph
Mean Roof Height: 15-0
Exposure Category: B
Occupancy Factor : 1.00
Building Type: Enclosed
Zone location: Exterior
TC Dead Load : 5.0 psf
BC Dead Load : 5.0 psf
Max comp. force 13100 Lbs
Quality Control Factor 1.25

Truss Design Engineer: Philip J. O'Regan
License #: 58126
Address: P.O. Box 280055, Tampa, FL 33682

PHILIP J. O'REGAN LICENSE No. 58126 STATE OF FLORIDA PROFESSIONAL ENGINEER



Date Sealed: 8/28/2006

| Job | Mark | Quan | Type | Span | P1-H1 | Left OH | Right OH | Engineering |
|---|---|---|---|---|---|---|---|---|
| whitt-bohlmann | C2 | 1 | HIPP | 130800 | 6 | 2- 0- 0 | 2- 0- 0 | T06082949 |

U# J#whitt-bohlmann BOHLMANN

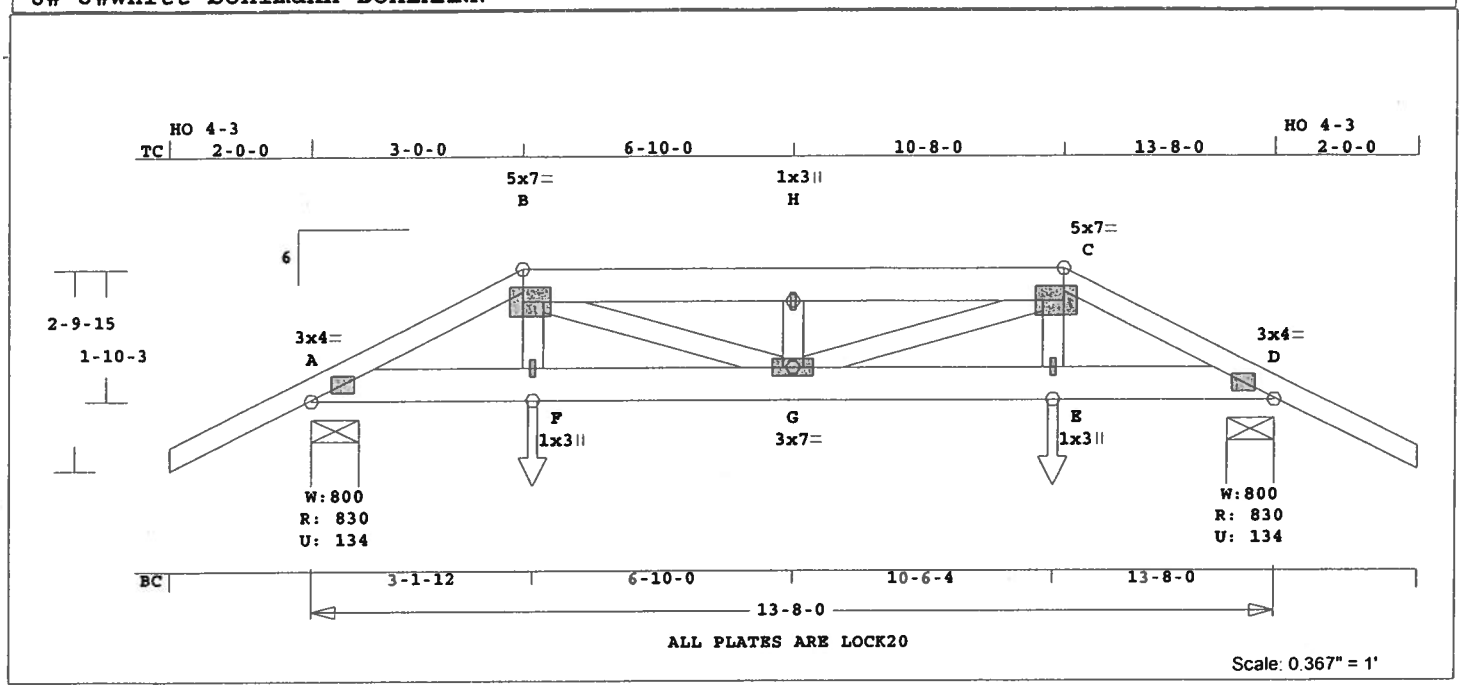


Robbins Engineering, Inc./Online Plus™ APPROX. TRUSS WEIGHT: 100.7 LBS

Online Plus -- Version 19.0.034
RUN DATE: 26-AUG-06

| | CSI | -Size- | ----Lumber---- |
|---|---|---|---|
| TC | 0.10 | 2x 4 | SP-#2 |
| EX B -C | | 2x 6 | SP-#2 |
| BC | 0.22 | 2x 6 | SP-#2 |
| WB | 0.11 | 2x 4 | SP-#2 |

Brace truss as follows:

| O.C. | From | To |
|---|---|---|
| TC Cont. | 0- 0- 0 | 13- 8- 0 |
| BC Cont. | 0- 0- 0 | 13- 8- 0 |

| Loading | Live | Dead | (psf) |
|---|---|---|---|
| TC | 20.0 | 10.0 | |
| BC | 0.0 | 10.0 | |
| Total | 20.0 | 20.0 | 40.0 |
| Spacing | | | 24.0" |

Lumber Duration Factor 1.25
Plate Duration Factor 1.25
TC Fb=1.00 Fc=1.00 Ft=1.00
BC Fb=1.00 Fc=1.00 Ft=1.00

Load Case # 1 Girder Loading
Lumber Duration Factor 1.25
Plate Duration Factor 1.25

| plf - | Live | Dead | From | To |
|---|---|---|---|---|
| TC V | 40 | 20 | 0.0' | 13.7' |
| BC V | 0 | 20 | 0.0' | 13.7' |
| TC V | 10 | 5 | 3.0' | 10.7' |
| BC V | 0 | 5 | 3.1' | 10.5' |
| BC V | 40 | 40 | 3.1' | CL-LB |
| BC V | 40 | 40 | 10.5' | CL-LB |

Plus 6 Wind Load Case(s)
Plus 1 UBC LL Load Case(s)

| Jt | React Lbs | Uplft Lbs | Size In-Sx | Req'd In-Sx |
|---|---|---|---|---|
| A | 831 | 134 | 8- 0 | 1- 8 |
| | | | Hz = | -22 |
| D | 831 | 134 | 8- 0 | 1- 8 |
| | | | Hz = | 23 |

Membr CSI P Lbs Axl-CSI-Bnd

| ----------Top Chords---------- | | | | | |
|---|---|---|---|---|---|
| A -B | 0.10 | 1244 | C | 0.01 | 0.09 |
| B -H | 0.11 | 1728 | C | 0.01 | 0.10 |
| H -C | 0.11 | 1728 | C | 0.01 | 0.10 |
| C -D | 0.10 | 1244 | C | 0.01 | 0.09 |
| --------Bottom Chords--------- | | | | | |
| A -F | 0.21 | 1126 | T | 0.15 | 0.06 |
| F -G | 0.22 | 1111 | T | 0.14 | 0.08 |
| G -E | 0.22 | 1111 | T | 0.14 | 0.08 |
| E -D | 0.21 | 1126 | T | 0.15 | 0.06 |
| ----------Webs---------- | | | | | |
| F -B | 0.02 | 170 | T | | |
| B -G | 0.11 | 648 | T | | |
| G -H | 0.02 | 278 | C | | |
| G -C | 0.11 | 648 | T | | |
| E -C | 0.02 | 170 | T | | |

TL Defl -0.07" in G -E L/999
LL Defl -0.03" in G -E L/999
Shear // Grain in B -H 0.11

Plates for each ply each face.
PLATING CONFORMS TO TPI.
REPORT: NER 691
ROBBINS ENGINEERING, INC.
BASED ON SP LUMBER
USING GROSS AREA TEST.
Plate - LOCK 20 Ga, Gross Area
Plate - RHS 20 Ga, Gross Area

| Jt | Type | Plt Size | X | Y | JSI |
|---|---|---|---|---|---|
| A | LOCK | 3.0x 4.0 | Ctr | Ctr | 0.73 |
| B | LOCK | 5.0x 7.0-0.5 | Ctr | Ctr | 0.81 |
| H | LOCK | 1.0x 3.0 | Ctr | Ctr | 0.75 |
| C | LOCK | 5.0x 7.0 0.5 | Ctr | Ctr | 0.81 |
| D | LOCK | 3.0x 4.0 | Ctr | Ctr | 0.73 |
| F | LOCK | 1.0x 3.0 | Ctr | Ctr | 0.75 |
| G | LOCK | 3.0x 7.0 | Ctr | Ctr | 0.46 |
| E | LOCK | 1.0x 3.0 | Ctr | Ctr | 0.75 |

REVIEWED BY:
Robbins Engineering, Inc.
PO Box 280055
Tampa, FL 33682

REFER TO ROBBINS ENG. GENERAL NOTES AND SYMBOLS SHEET FOR ADDITIONAL SPECIFICATIONS.

NOTES:
Trusses Manufactured by:
Mayo Truss Co. Inc.
Analysis Conforms To:
FBC2004
Girder Step Down Hip
Framing King Jacks
Jack Open Faced
Setback 3- 0- 0
OH Loading
Soffit psf 2.0
Design checked for 10 psf non-concurrent LL on BC.
Wind Loads - ANSI / ASCE 7-02
Truss is designed as a Main Wind-Force Resistance System.
Wind Speed: 110 mph
Mean Roof Height: 15-0
Exposure Category: B
Occupancy Factor : 1.00
Building Type: Enclosed
Zone location: Exterior
TC Dead Load : 5.0 psf
BC Dead Load : 5.0 psf
Max comp. force 1728 Lbs
Quality Control Factor 1.25

Truss Design Engineer: Philip J. O'Regan
License #: 58126
Address: P.O. Box 280055, Tampa, FL 33682

Date Sealed: 8/28/2006

| Job | Mark | Quan | Type | Span | P1-H1 | Left OH | Right OH | Engineering |
|---|---|---|---|---|---|---|---|---|
| whitt-bohlmann | CJ2 | 2 | JCA2.DD | 40215 | 4.243 | 2- 9-15 | 0 | T06082949 |

U# J#whitt-bohlmann BOHLMANN

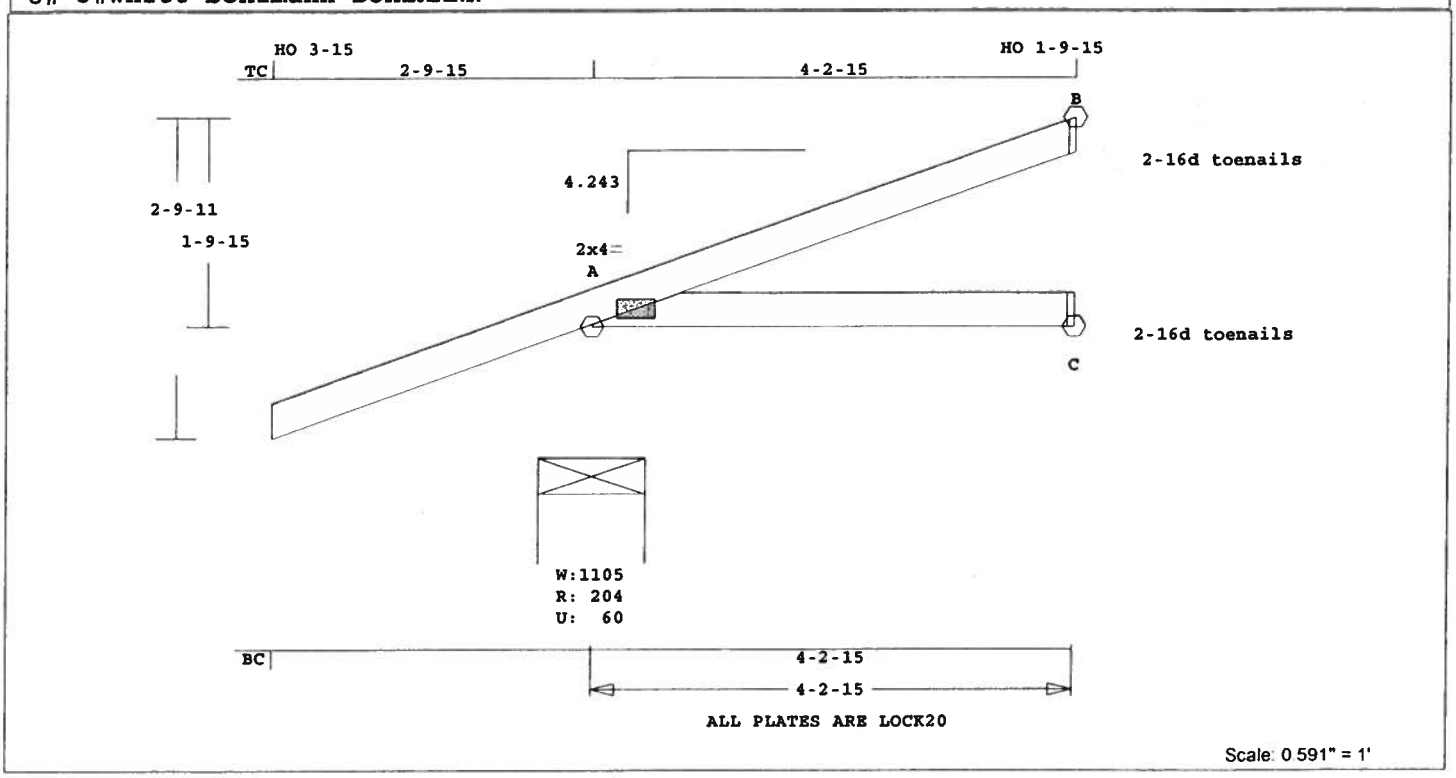


Robbins Engineering, Inc./Online Plus™ APPROX. TRUSS WEIGHT: 22.4 LBS

Online Plus -- Version 19.0.034
RUN DATE: 26-AUG-06

| | CSI | -Size- | ----Lumber---- |
|---|---|---|---|
| TC | 0.05 | 2x 4 | SP-#2 |
| BC | 0.03 | 2x 4 | SP-#2 |

Brace truss as follows:

| O.C. | From | To |
|---|---|---|
| TC Cont. | 0- 0- 0 | 4- 2-15 |
| BC Cont. | 0- 0- 0 | 4- 2-15 |

| Loading | Live | Dead | (psf) |
|---|---|---|---|
| TC | 20.0 | 10.0 | |
| BC | 0.0 | 10.0 | |
| Total | 20.0 | 20.0 | 40.0 |
| Spacing | | | 24.0" |

Lumber Duration Factor 1.25
Plate Duration Factor 1.25
TC Fb=1.00 Fc=1.00 Ft=1.00
BC Fb=1.00 Fc=1.00 Ft=1.00

Load Case # 1 Girder Loading
Lumber Duration Factor 1.25
Plate Duration Factor 1.25

| plf - | Live | Dead | From | To |
|---|---|---|---|---|
| TC V | 40 | 20 | 0.0' | 4.2' |
| BC V | 0 | 20 | 0.0' | 4.2' |
| TC V | -40 | -20 | 0.0' | |
| | -12 | -6 | | 4.2' |
| BC V | 0 | -20 | 0.0' | |
| | 0 | -6 | | 4.2' |

Plus 5 Wind Load Case(s)
Plus 1 UBC LL Load Case(s)

| Jt | React Lbs | Uplft Lbs | Size In-Sx | Req'd In-Sx |
|---|---|---|---|---|
| A | 204 | 60 | 11- 5 | 1- 8 |
| | | | Hz = | 16 |
| C | 31 | 0 | 1- 8 | 1- 8 |
| B | 46 | 18 | 1- 8 | 1- 8 |

| Membr | CSI | P Lbs | Axl-CSI-Bnd |
|---|---|---|---|
| ----------Top Chords---------- | | | |
| A -B | 0.05 | 8 C | 0.00 0.05 |
| --------Bottom Chords--------- | | | |
| A -C | 0.03 | 0 T | 0.00 0.03 |

TL Defl 0.00" in A -C L/999
LL Defl 0.00" in A -C L/999
Shear // Grain in A -B 0.05

Plates for each ply each face.
PLATING CONFORMS TO TPI.
REPORT: NER 691
ROBBINS ENGINEERING, INC.
BASED ON SP LUMBER
USING GROSS AREA TEST.
Plate - LOCK 20 Ga, Gross Area
Plate - RHS 20 Ga, Gross Area

| Jt | Type | Plt Size | X | Y | JSI |
|---|---|---|---|---|---|
| A | LOCK | 2.0x 4.0 | Ctr | Ctr | 0.72 |

REVIEWED BY:
Robbins Engineering, Inc.
PO Box 280055
Tampa, FL 33682

REFER TO ROBBINS ENG. GENERAL NOTES AND SYMBOLS SHEET FOR ADDITIONAL SPECIFICATIONS.

For proper installation of toe-nails, refer to the 2001 National Design Specification (NDS) for Wood Construction

NOTES:
Trusses Manufactured by:
Mayo Truss Co. Inc.
Analysis Conforms To:
FBC2004
Girder King Jack
Loading TC and BC

Hz = 11
Setback 3- 0- 0
OH Loading
Soffit psf 2.0
Design checked for 10 psf non-concurrent LL on BC.
Use properly rated hangers for loads framing into girder truss.
Wind Loads - ANSI / ASCE 7-02
Truss is designed as a Main Wind-Force Resistance System.
Wind Speed: 110 mph
Mean Roof Height: 15-0
Exposure Category: B
Occupancy Factor : 1.00
Building Type: Enclosed
Zone location: Exterior
TC Dead Load : 5.0 psf
BC Dead Load : 5.0 psf
Max comp. force 8 Lbs
Quality Control Factor 1.25

Truss Design Engineer: Philip J. O'Regan
License #: 58126
Address: P.O. Box 280055, Tampa, FL 33682

PHILIP J. O'REGAN
LICENSE
No. 58126
STATE OF
FLORIDA
PROFESSIONAL ENGINEER



Date Sealed: 8/28/2006

| Job | Mark | Quan | Type | Span | P1-H1 | Left OH | Right OH | Engineering |
|---|---|---|---|---|---|---|---|---|
| whitt-bohlmann | D1 | 3 | TR | 100600 | 6 | 2- 0- 0 | 2- 0- 0 | T06082949 |

U# J#whitt-bohlmann BOHLMANN

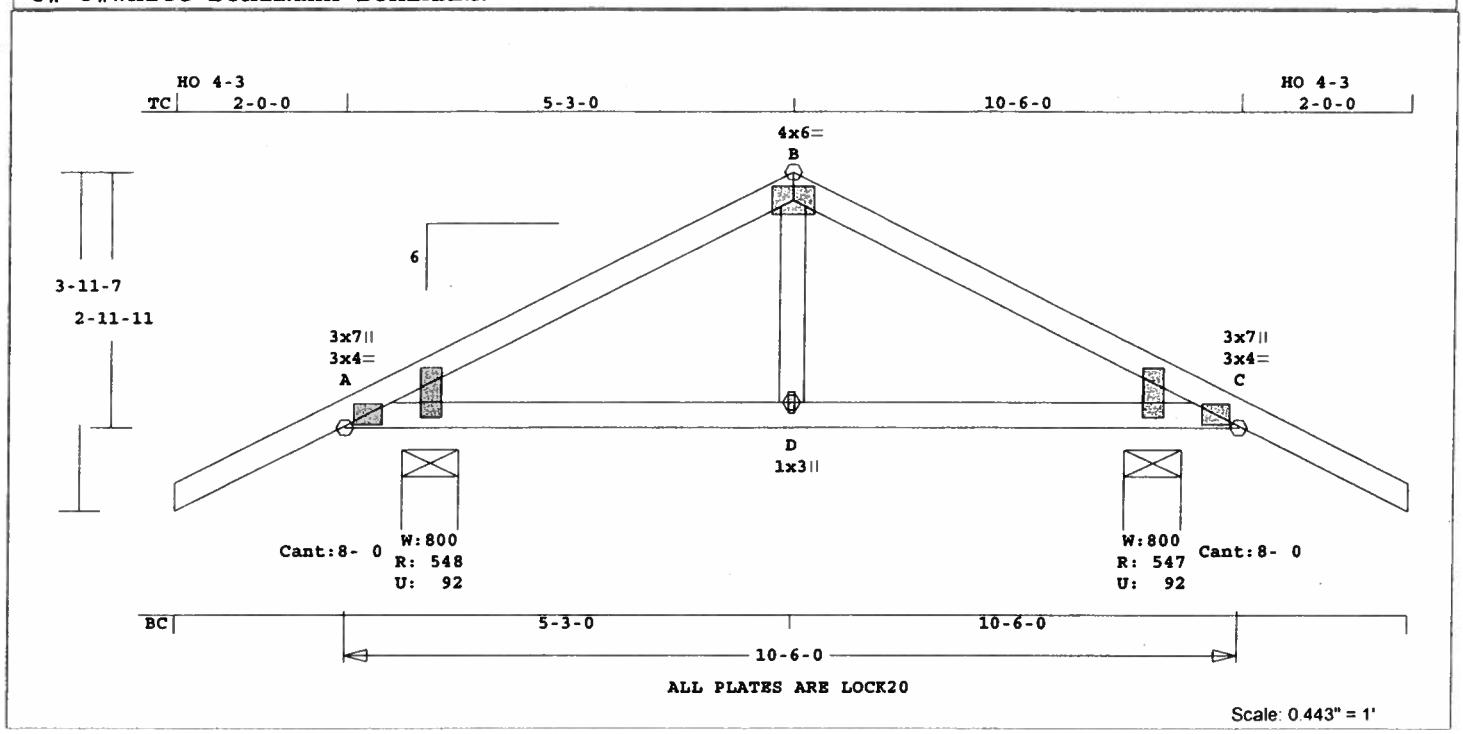


Robbins Engineering, Inc./Online Plus™ APPROX. TRUSS WEIGHT: 57.7 LBS

Online Plus -- Version 19.0.034
RUN DATE: 26-AUG-06

| | CSI | -Size- | ----Lumber---- |
|---|---|---|---|
| TC | 0.13 | 2x 4 | SP-#2 |
| BC | 0.13 | 2x 4 | SP-#2 |
| WB | 0.02 | 2x 4 | SP-#2 |
| WG | --- | 2x 4 | SP-#2 |

Brace truss as follows:

| O.C. | From | To |
|---|---|---|
| TC Cont. | 0- 0- 0 | 10- 6- 0 |
| BC Cont. | 0- 0- 0 | 10- 6- 0 |

| Loading | Live | Dead | (psf) |
|---|---|---|---|
| TC | 20.0 | 10.0 | |
| BC | 0.0 | 10.0 | |
| Total | 20.0 | 20.0 | 40.0 |
| Spacing | | | 24.0" |

Lumber Duration Factor 1.25
Plate Duration Factor 1.25
TC Fb=1.15 Fc=1.10 Ft=1.10
BC Fb=1.10 Fc=1.10 Ft=1.10

Plus 6 Wind Load Case(s)
Plus 1 UBC LL Load Case(s)

| Jt | React Lbs | Uplft Lbs | Size In-Sx | Req'd In-Sx |
|---|---|---|---|---|
| A | 548 | 92 | 8- 0 | 1- 8 |
| | | | Hz = | -41 |
| C | 548 | 92 | 8- 0 | 1- 8 |
| | | | Hz = | 42 |

| Membr | CSI | P Lbs | Axl-CSI-Bnd |
|---|---|---|---|
| ----------Top Chords---------- | | | |
| A -B | 0.13 | 389 C | 0.00 0.13 |
| B -C | 0.13 | 389 C | 0.00 0.13 |
| --------Bottom Chords--------- | | | |
| A -D | 0.13 | 346 T | 0.03 0.10 |
| D -C | 0.13 | 346 T | 0.03 0.10 |
| ----------Webs---------- | | | |
| D -B | 0.02 | 178 T | |

TL Defl -0.01" in D -C L/999
LL Defl -0.01" in D -C L/999
Shear // Grain in A -B 0.14

Plates for each ply each face.
PLATING CONFORMS TO TPI.
REPORT: NER 691
ROBBINS ENGINEERING, INC.
BASED ON SP LUMBER
USING GROSS AREA TEST.
Plate - LOCK 20 Ga, Gross Area
Plate - RHS 20 Ga, Gross Area

| Jt | Type | Plt Size | X | Y | JSI |
|---|---|---|---|---|---|
| A | LOCK | 3.0x 4.0 | Ctr | Ctr | 0.61 |
| A | LOCK | 3.0x 7.0 | Ctr | Ctr | 0.00 |
| B | LOCK | 4.0x 6.0 | Ctr | Ctr | 0.44 |
| C | LOCK | 3.0x 4.0 | Ctr | Ctr | 0.61 |
| C | LOCK | 3.0x 7.0 | Ctr | Ctr | 0.00 |
| D | LOCK | 1.0x 3.0 | Ctr | Ctr | 0.75 |

OH Loading
Soffit psf 2.0
Design checked for 10 psf non-concurrent LL on BC.
Wind Loads - ANSI / ASCE 7-02
Truss is designed as a Main Wind-Force Resistance System.
Wind Speed: 110 mph
Mean Roof Height: 15-0
Exposure Category: B
Occupancy Factor : 1.00
Building Type: Enclosed
Zone location: Exterior
TC Dead Load : 5.0 psf
BC Dead Load : 5.0 psf
Max comp. force 389 Lbs
Quality Control Factor 1.25

REVIEWED BY:
Robbins Engineering, Inc.
PO Box 280055
Tampa, FL 33682

REFER TO ROBBINS ENG. GENERAL NOTES AND SYMBOLS SHEET FOR ADDITIONAL SPECIFICATIONS.

NOTES:
Trusses Manufactured by:
Mayo Truss Co. Inc.
Analysis Conforms To:
FBC2004

Truss Design Engineer: Philip J. O'Regan
License #: 58126
Address: P.O. Box 280055, Tampa, FL 33682

Date Sealed: 8/28/2006

| Job | Mark | Quan | Type | Span | P1-H1 | Left OH | Right OH | Engineering |
|---|---|---|---|---|---|---|---|---|
| whitt-bohlmann | D2 | 1 | TR | 100600 | 6 | 0 | 0 | T06082949 |

U# J#whitt-bohlmann BOHLMANN

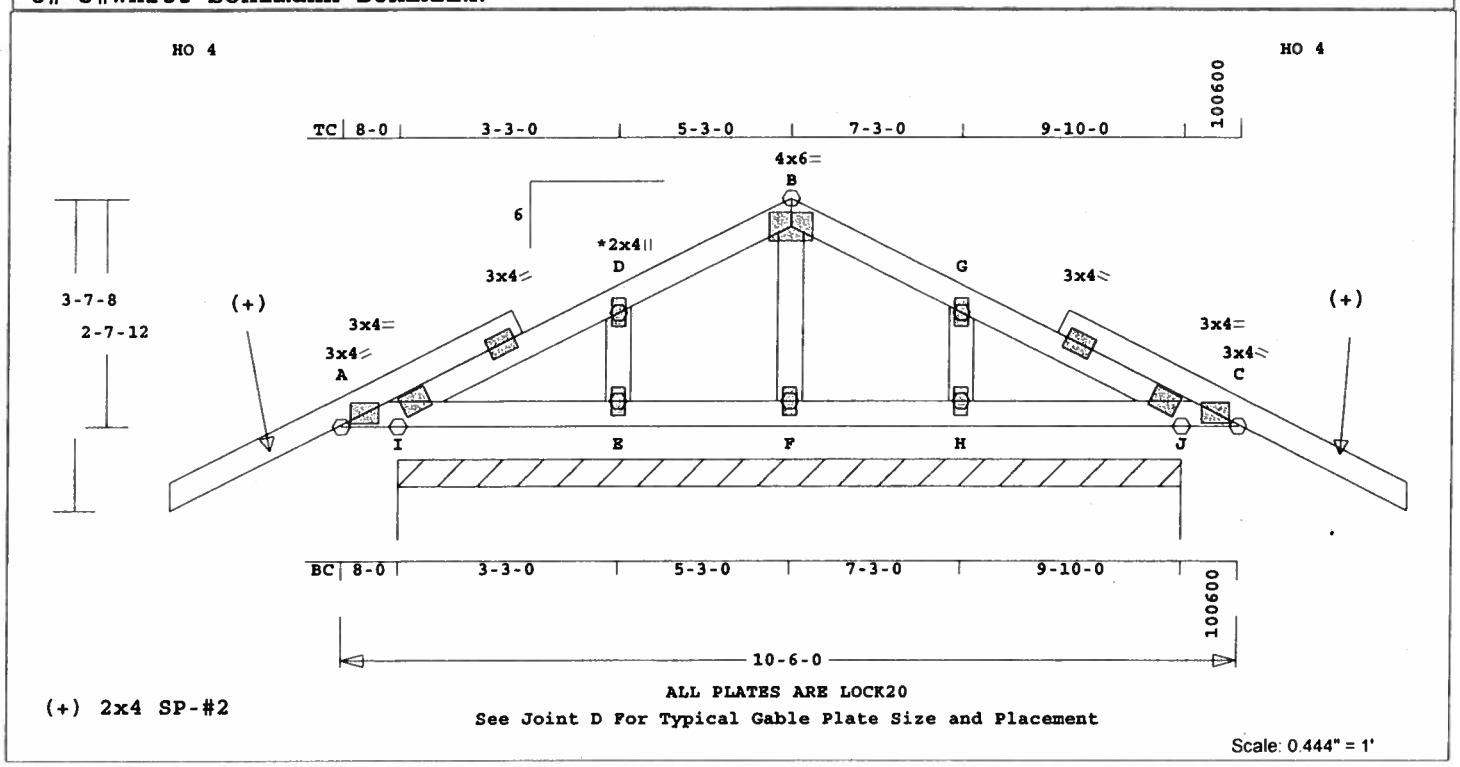


Robbins Engineering, Inc./Online Plus™ APPROX. TRUSS WEIGHT: 65.2 LBS

Online Plus -- Version 19.0.034
RUN DATE: 26-AUG-06

| | CSI | -Size- | ----Lumber---- |
|---|---|---|---|
| TC | 0.05 | 2x 4 | SP-#2 |
| BC | 0.03 | 2x 4 | SP-#2 |
| GW | 0.01 | 2x 4 | SP-#2 |

Brace truss as follows:

| | O.C. | From | To |
|---|---|---|---|
| TC Cont. | | 0- 0- 0 | 10- 6- 0 |
| BC Cont. | | 0- 0- 0 | 10- 6- 0 |

| Loading | Live | Dead | (psf) |
|---|---|---|---|
| TC | 20.0 | 10.0 | |
| BC | 0.0 | 10.0 | |
| Total | 20.0 | 20.0 | 40.0 |
| Spacing | | | 24.0" |
| Lumber Duration Factor | | | 1.25 |
| Plate Duration Factor | | | 1.25 |

TC Fb=1.15 Fc=1.10 Ft=1.10
BC Fb=1.10 Fc=1.10 Ft=1.10

Plus 6 Wind Load Case(s)
Plus 1 UBC LL Load Case(s)

| Jt | React Lbs | Uplft Lbs | Size In-Sx | Req'd In-Sx |
|---|---|---|---|---|
| Cont. | Brg 840 | 0- 8- 0 139 | to Hz = | 9-10- 0 36 |

| Membr | CSI | P Lbs | Axl | CSI-Bnd | |
|---|---|---|---|---|---|
| ----------Top Chords---------- | | | | | |
| A -D | 0.05 | 113 | C | 0.00 | 0.05 |
| D -B | 0.05 | 131 | C | 0.00 | 0.05 |
| B -G | 0.05 | 131 | C | 0.00 | 0.05 |
| G -C | 0.05 | 113 | C | 0.00 | 0.05 |
| --------Bottom Chords--------- | | | | | |
| A -E | 0.03 | 4 | T | 0.00 | 0.03 |
| E -F | 0.03 | 0 | T | 0.00 | 0.03 |
| F -H | 0.03 | 0 | T | 0.00 | 0.03 |
| H -C | 0.03 | 4 | T | 0.00 | 0.03 |
| ----------Gable Webs---------- | | | | | |
| E -D | 0.01 | 166 | C | | |
| F -B | 0.00 | 47 | T | | |
| H -G | 0.01 | 166 | C | | |

TL Defl 0.00" in I -E L/999
LL Defl 0.00" in I -E L/999
Shear // Grain in I -D 0.09

Plates for each ply each face.
PLATING CONFORMS TO TPI.
REPORT: NER 691
ROBBINS ENGINEERING, INC.
BASED ON SP LUMBER
USING GROSS AREA TEST.
Plate - LOCK 20 Ga, Gross Area
Plate - RHS 20 Ga, Gross Area

| Jt | Type | Plt Size | X | Y | JSI |
|---|---|---|---|---|---|
| A | LOCK | 3.0x 4.0 | Ctr | Ctr | 0.61 |
| D | LOCK | 2.0x 4.0 | Ctr | Ctr | 0.00 |
| B | LOCK | 4.0x 6.0 | Ctr | Ctr | 0.44 |
| G | LOCK | 2.0x 4.0 | Ctr | Ctr | 0.00 |
| C | LOCK | 3.0x 4.0 | Ctr | Ctr | 0.61 |
| E | LOCK | 2.0x 4.0 | Ctr | Ctr | 0.00 |
| F | LOCK | 2.0x 4.0 | Ctr | Ctr | 0.00 |
| H | LOCK | 2.0x 4.0 | Ctr | Ctr | 0.00 |

REVIEWED BY:
Robbins Engineering, Inc.
PO Box 280055
Tampa, FL 33682

REFER TO ROBBINS ENG. GENERAL NOTES AND SYMBOLS SHEET FOR ADDITIONAL SPECIFICATIONS.

NOTES:
Trusses Manufactured by:
Mayo Truss Co. Inc.
Analysis Conforms To:
FBC2004
WARNING Do Not Cut overframe member between outside of truss and first tie-plate to inside of heel plate.
Design checked for 10 psf non-concurrent LL on BC.
Refer to Gen Det 3 series for web bracing and plating.
Wind Loads - ANSI / ASCE 7-02
Truss is designed as a Main Wind-Force Resistance System.
Wind Speed: 110 mph
Mean Roof Height: 15-0
Exposure Category: B
Occupancy Factor : 1.00
Building Type: Enclosed
Zone location: Exterior
TC Dead Load : 5.0 psf
BC Dead Load : 5.0 psf
Max comp. force 166 Lbs
Quality Control Factor 1.25

Truss Design Engineer: Philip J. O'Regan
License #: 58126
Address: P.O. Box 280055, Tampa, FL 33682

Date Sealed: 8/28/2006

| Job | Mark | Quan | Type | Span | P1-H1 | Left OH | Right OH | Engineering |
|---|---|---|---|---|---|---|---|---|
| whitt-bohlmann | J1A | 1 | TR | 70000 | 6 | 2- 0- 0 | 0 | T06082949 |

U# J#whitt-bohlmann BOHLMANN

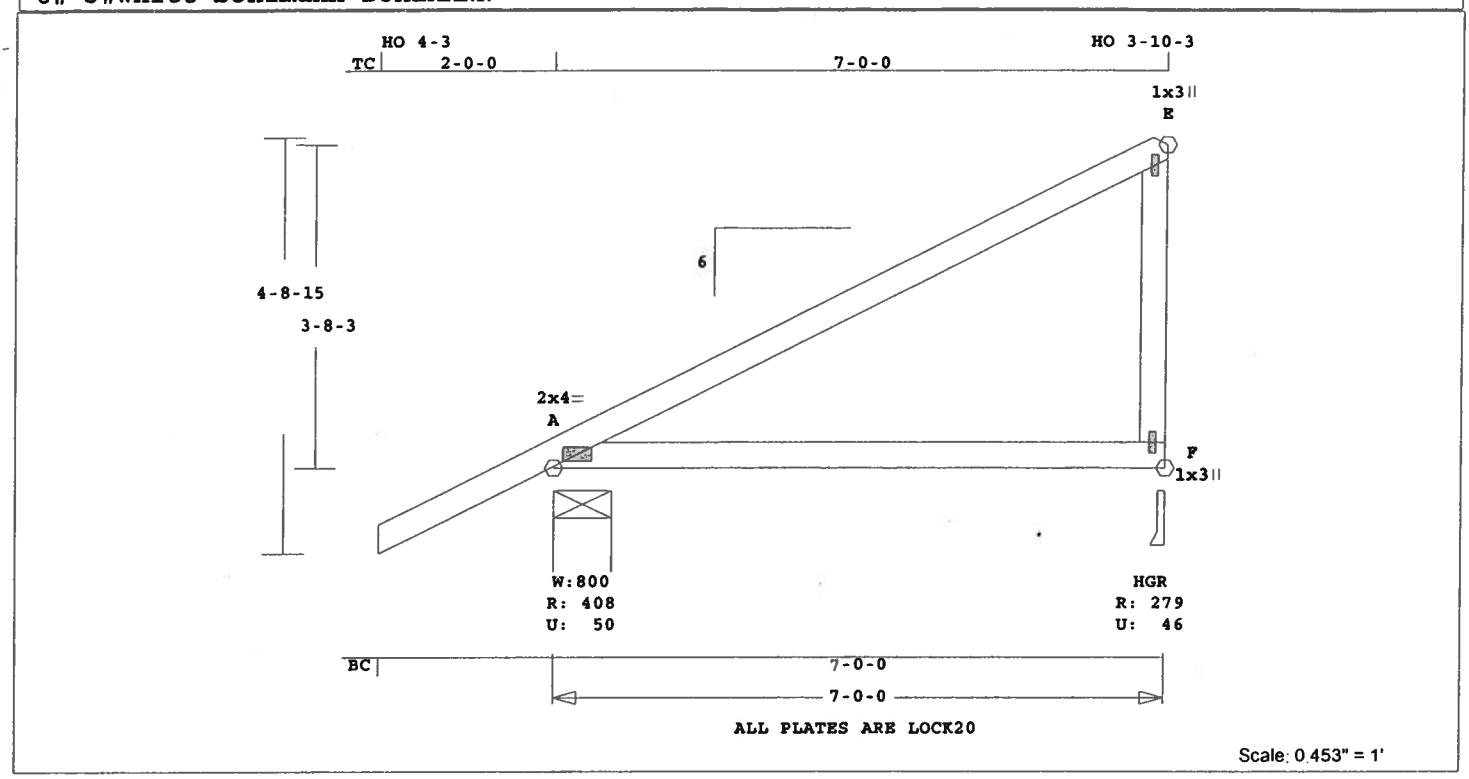


Robbins Engineering, Inc./Online Plus™ APPROX. TRUSS WEIGHT: 38.5 LBS

Online Plus -- Version 19.0.034
RUN DATE: 26-AUG-06

| | CSI | -Size- | ----Lumber---- |
|---|---|---|---|
| TC | 0.49 | 2x 4 | SP-#2 |
| BC | 0.36 | 2x 4 | SP-#2 |
| WB | 0.03 | 2x 4 | SP-#2 |

Brace truss as follows:

| O.C. | From | To |
|---|---|---|
| TC Cont. | 0- 0- 0 | 7- 0- 0 |
| BC Cont. | 0- 0- 0 | 7- 0- 0 |

| Loading | Live | Dead | (psf) |
|---|---|---|---|
| TC | 20.0 | 10.0 | |
| BC | 0.0 | 10.0 | |
| Total | 20.0 | 20.0 | 40.0 |
| Spacing | | | 24.0" |

Lumber Duration Factor 1.25
Plate Duration Factor 1.25
TC Fb=1.15 Fc=1.10 Ft=1.10
BC Fb=1.10 Fc=1.10 Ft=1.10

Plus 5 Wind Load Case(s)
Plus 1 UBC LL Load Case(s)

| Jt | React Lbs | Uplft Lbs | Size In-Sx | Req'd In-Sx |
|---|---|---|---|---|
| A | 408 | 50 | 8- 0 | 1- 8 |
| | | | Hz = | -48 |
| F | 280 | 47 | 3- 8 | 1- 8 |
| | | | Hz = | 122 |

| Membr | CSI | P Lbs | Axl-CSI-Bnd |
|---|---|---|---|
| ----------Top Chords---------- | | | |
| A -E | 0.49 | 61 C | 0.00 0.49 |
| --------Bottom Chords--------- | | | |
| A -F | 0.36 | 96 T | 0.00 0.36 |
| ----------Webs---------- | | | |
| F -E | 0.03 | 189 C | WindLd |

TL Defl -0.18" in A -F L/396
LL Defl -0.07" in A -F L/989
Shear // Grain in A -E 0.23

Plates for each ply each face.
PLATING CONFORMS TO TPI.
REPORT: NER 691
ROBBINS ENGINEERING, INC.
BASED ON SP LUMBER
USING GROSS AREA TEST.
Plate - LOCK 20 Ga, Gross Area
Plate - RHS 20 Ga, Gross Area

| Jt | Type | Plt Size | X | Y | JSI |
|---|---|---|---|---|---|
| A | LOCK | 2.0x 4.0 | Ctr | Ctr | 0.69 |
| E | LOCK | 1.0x 3.0 | Ctr | Ctr | 0.75 |
| F | LOCK | 1.0x 3.0 | Ctr | Ctr | 0.75 |

REVIEWED BY:
Robbins Engineering, Inc.
PO Box 280055
Tampa, FL 33682

REFER TO ROBBINS ENG. GENERAL NOTES AND SYMBOLS SHEET FOR ADDITIONAL SPECIFICATIONS.

NOTES:
Trusses Manufactured by:
Mayo Truss Co. Inc.
Analysis Conforms To:
FBC2004
OH Loading
Soffit psf 2.0
Design checked for 10 psf non-concurrent LL on BC.

Wind Loads - ANSI / ASCE 7-02
Truss is designed as a Main Wind-Force Resistance System.
Wind Speed: 110 mph
Mean Roof Height: 15-0
Exposure Category: B
Occupancy Factor : 1.00
Building Type: Enclosed
Zone location: Exterior
TC Dead Load : 5.0 psf
BC Dead Load : 5.0 psf
Max comp. force 189 Lbs
Quality Control Factor 1.25

Truss Design Engineer: Philip J. O'Regan
License #: 58126
Address: P.O. Box 280055, Tampa, FL 33682

PHILIP J. O'REGAN
LICENSE
No. 58126
STATE OF FLORIDA
PROFESSIONAL ENGINEER



Date Scaled: 8/28/2006

| Job | Mark | Quan | Type | Span | P1-H1 | Left OH | Right OH | Engineering |
|---|---|---|---|---|---|---|---|---|
| whitt-bohlmann | J1B | 1 | HHIP | 70000 | 6 | 2- 0- 0 | 0 | T06082949 |

U# J#whitt-bohlmann BOHLMANN

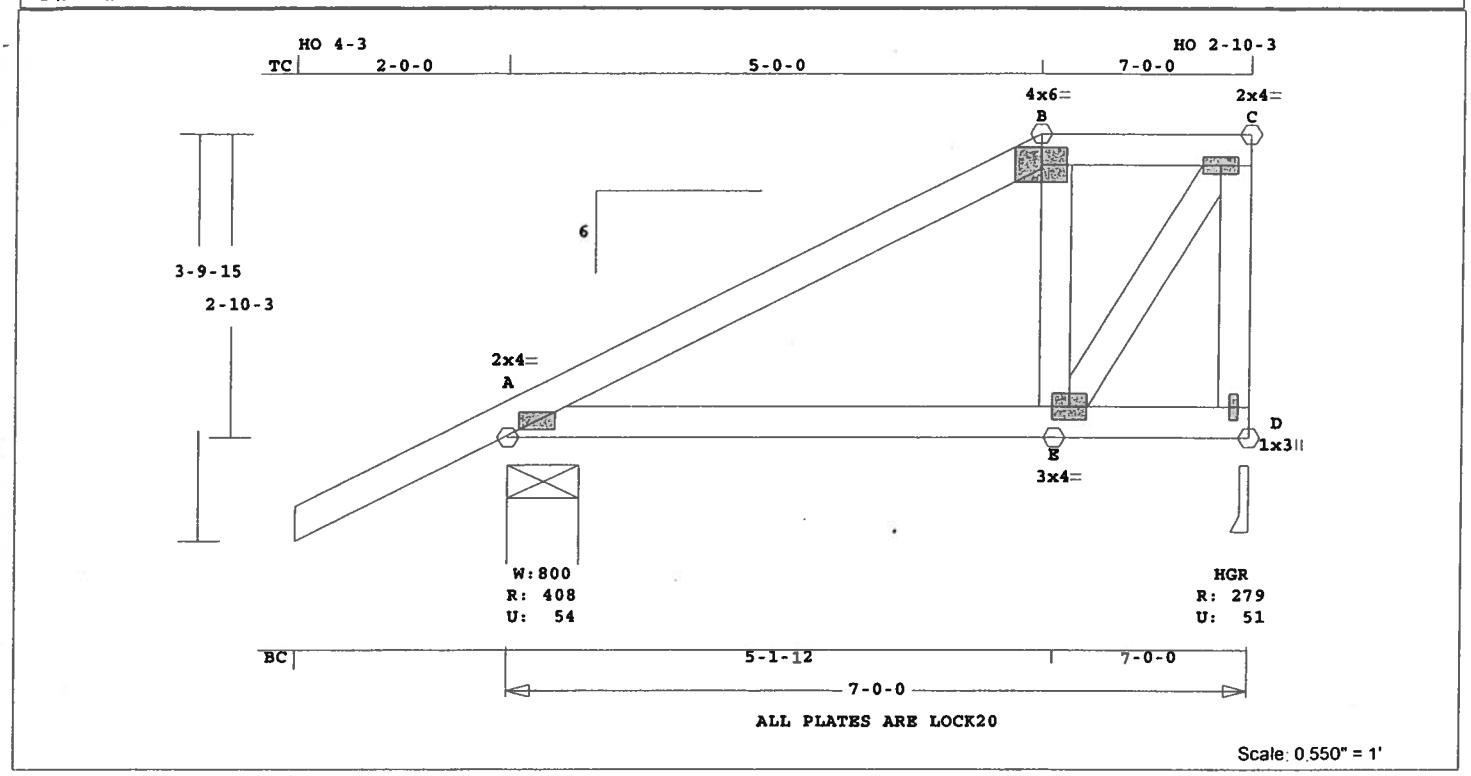


Robbins Engineering, Inc./Online Plus™ APPROX. TRUSS WEIGHT: 45.7 LBS

Online Plus -- Version 19.0.034
RUN DATE: 26-AUG-06

| | CSI | -Size- | ----Lumber---- |
|---|---|---|---|
| TC | 0.20 | 2x 4 | SP-#2 |
| BC | 0.17 | 2x 4 | SP-#2 |
| WB | 0.06 | 2x 4 | SP-#2 |

Brace truss as follows:

| O.C. | From | To |
|---|---|---|
| TC Cont. | 0- 0- 0 | 7- 0- 0 |
| BC Cont. | 0- 0- 0 | 7- 0- 0 |

| Loading | Live | Dead | (psf) |
|---|---|---|---|
| TC | 20.0 | 10.0 | |
| BC | 0.0 | 10.0 | |
| Total | 20.0 | 20.0 | 40.0 |
| Spacing | | | 24.0" |

Lumber Duration Factor 1.25
Plate Duration Factor 1.25
TC Fb=1.15 Fc=1.10 Ft=1.10
BC Fb=1.10 Fc=1.10 Ft=1.10

Plus 6 Wind Load Case(s)
Plus 1 UBC LL Load Case(s)

| Jt | React Lbs | Uplft Lbs | Size In-Sx | Req'd In-Sx |
|---|---|---|---|---|
| A | 408 | 55 | 8- 0 | 1- 8 |
| | | | Hz = | -34 |
| D | 280 | 52 | 3- 8 | 1- 8 |
| | | | Hz = | 89 |

| Membr | CSI | P Lbs | Axl-CSI-Bnd | |
|---|---|---|---|---|
| ----------Top Chords---------- | | | | |
| A -B | 0.20 | 203 C | 0.00 | 0.20 |
| B -C | 0.08 | 181 C | 0.00 | 0.08 |
| --------Bottom Chords--------- | | | | |
| A -E | 0.17 | 181 T | 0.03 | 0.14 |
| E -D | 0.12 | 69 T | 0.00 | 0.12 |
| ----------Webs---------- | | | | |
| E -B | 0.01 | 140 C | | |
| E -C | 0.06 | 326 T | | |
| D -C | 0.03 | 298 C | WindLd | |

TL Defl -0.03" in A -E L/999
LL Defl -0.01" in A -E L/999
Shear // Grain in A -B 0.15

Plates for each ply each face.
PLATING CONFORMS TO TPI.
REPORT: NER 691
ROBBINS ENGINEERING, INC.
BASED ON SP LUMBER
USING GROSS AREA TEST.
Plate - LOCK 20 Ga, Gross Area
Plate - RHS 20 Ga, Gross Area

| Jt | Type | Plt Size | X | Y | JSI |
|---|---|---|---|---|---|
| A | LOCK | 2.0x 4.0 | Ctr | Ctr | 0.69 |
| B | LOCK | 4.0x 6.0 | Ctr | Ctr | 0.62 |
| C | LOCK | 2.0x 4.0 | Ctr | Ctr | 0.75 |
| E | LOCK | 3.0x 4.0 | Ctr | Ctr | 0.38 |
| D | LOCK | 1.0x 3.0 | Ctr | Ctr | 0.75 |

REVIEWED BY:
Robbins Engineering, Inc.
PO Box 280055
Tampa, FL 33682

REFER TO ROBBINS ENG. GENERAL NOTES AND SYMBOLS SHEET FOR ADDITIONAL SPECIFICATIONS.

NOTES:
Trusses Manufactured by:
Mayo Truss Co. Inc.

Analysis Conforms To:
FBC2004
OH Loading
Soffit psf 2.0
Design checked for 10 psf non-concurrent LL on BC.
Wind Loads - ANSI / ASCE 7-02
Truss is designed as a Main Wind-Force Resistance System.
Wind Speed: 110 mph
Mean Roof Height: 15-0
Exposure Category: B
Occupancy Factor : 1.00
Building Type: Enclosed
Zone location: Exterior
TC Dead Load : 5.0 psf
BC Dead Load : 5.0 psf
Max comp. force 298 Lbs
Quality Control Factor 1.25

Truss Design Engineer: Philip J. O'Regan
License #: 58126
Address: P.O. Box 280055, Tampa, FL 33682

PHILIP J. O'REGAN
LICENSE
No. 58126
STATE OF FLORIDA
PROFESSIONAL ENGINEER



Date Sealed: 8/28/2006

| Job | Mark | Quan | Type | Span | P1-H1 | Left OH | Right OH | Engineering |
|---|---|---|---|---|---|---|---|---|
| whitt-bohlmann | P1 | 9 | TR | 60800 | 6 | 11- 5 | 11- 5 | T06082949 |

U# J#whitt-bohlmann BOHLMANN

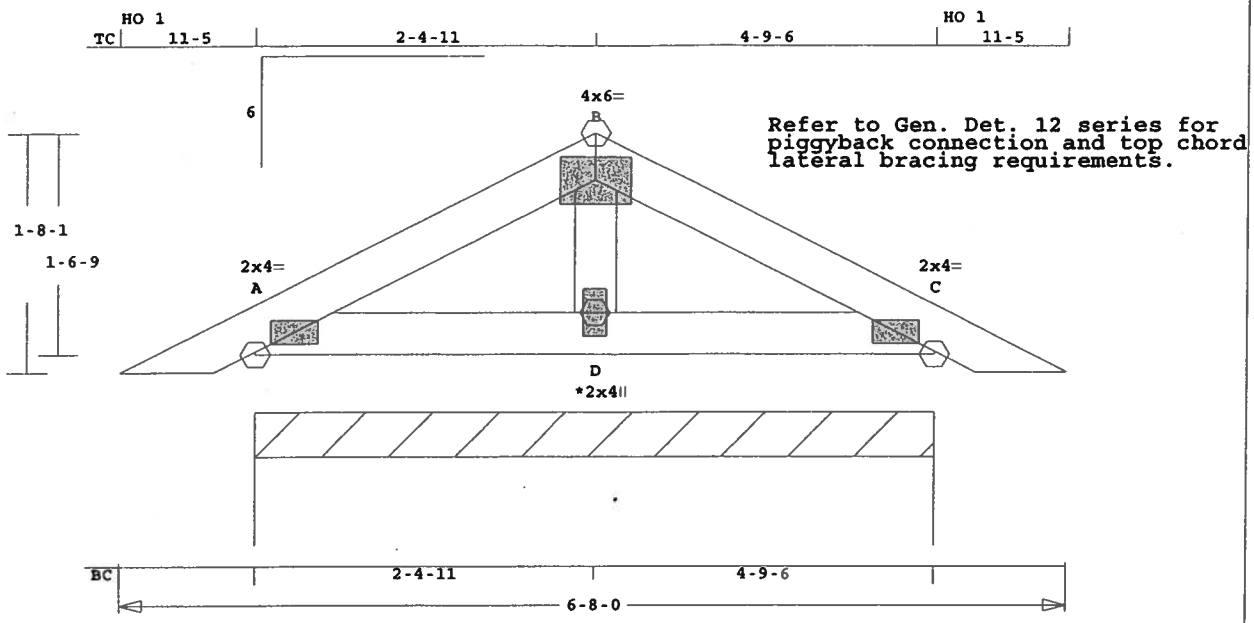


Refer to Gen. Det. 12 series for piggyback connection and top chord lateral bracing requirements.

ALL PLATES ARE LOCK20

See Joint D For Typical Gable Plate Size and Placement

Scale: 0.753" = 1'

Robbins Engineering, Inc./Online Plus™ APPROX. TRUSS WEIGHT: 24.9 LBS

Online Plus -- Version 19.0.034
RUN DATE: 26-AUG-06

| | CSI | -Size- | ----Lumber---- |
|---|---|---|---|
| TC | 0.03 | 2x 4 | SP-#2 |
| BC | 0.03 | 2x 4 | SP-#2 |
| GW | 0.00 | 2x 4 | SP-#2 |

Brace truss as follows:

| O.C. | From | To |
|---|---|---|
| TC Cont. | 0- 0- 0 | 6- 8- 0 |
| BC Cont. | 0- 0- 0 | 6- 8- 0 |

| Loading | Live | Dead | (psf) |
|---|---|---|---|
| TC | 20.0 | 10.0 | |
| BC | 0.0 | 10.0 | |
| Total | 20.0 | 20.0 | 40.0 |
| Spacing | | | 24.0" |

Lumber Duration Factor 1.25
Plate Duration Factor 1.25
TC Fb=1.15 Fc=1.10 Ft=1.10
BC Fb=1.10 Fc=1.10 Ft=1.10

Plus 6 Wind Load Case(s)
Plus 1 UBC LL Load Case(s)

| Jt | React Lbs | Uplft Lbs | Size In-Sx | Req'd In-Sx |
|---|---|---|---|---|
| Cont. | Brg | 0- 0- 0 to | 4- 9- 6 | |
| | 503 | 72 | Hz = | 19 |

| Membr | CSI | P Lbs | Axl-CSI-Bnd |
|---|---|---|---|
| ----------Top Chords---------- | | | |
| A -B | 0.03 | 88 C | 0.00 0.03 |
| B -C | 0.03 | 88 C | 0.00 0.03 |
| --------Bottom Chords--------- | | | |
| A -D | 0.03 | 2 C | 0.00 0.03 |
| D -C | 0.03 | 2 C | 0.00 0.03 |
| ----------Gable Webs---------- | | | |
| D -B | 0.00 | 50 C | |

TL Defl 0.00" in A -D L/999
LL Defl 0.00" in A -D L/999
Shear // Grain in A -B 0.06

Plates for each ply each face.
PLATING CONFORMS TO TPI.
REPORT: NER 691
ROBBINS ENGINEERING, INC.
BASED ON SP LUMBER
USING GROSS AREA TEST.
Plate - LOCK 20 Ga, Gross Area
Plate - RHS 20 Ga, Gross Area

| Jt | Type | Plt Size | X | Y | JSI |
|---|---|---|---|---|---|
| A | LOCK | 2.0x 4.0 | Ctr | Ctr | 0.65 |
| B | LOCK | 4.0x 6.0 | Ctr | Ctr | 0.37 |
| C | LOCK | 2.0x 4.0 | Ctr | Ctr | 0.65 |
| D | LOCK | 2.0x 4.0 | Ctr | Ctr | 0.00 |

REVIEWED BY:
Robbins Engineering, Inc.
PO Box 280055
Tampa, FL 33682

REFER TO ROBBINS ENG. GENERAL NOTES AND SYMBOLS SHEET FOR ADDITIONAL SPECIFICATIONS.

NOTES:
Trusses Manufactured by:
Mayo Truss Co. Inc.
Analysis Conforms To:
FBC2004
OH Loading
Soffit psf 2.0
Design checked for 10 psf non-concurrent LL on BC.
Refer to Gen Det 3 series for web bracing and plating.
Wind Loads - ANSI / ASCE 7-02
Truss is designed as a Main Wind-Force Resistance System.
Wind Speed: 110 mph
Mean Roof Height: 15-0
Exposure Category: B
Occupancy Factor : 1.00
Building Type: Enclosed
Zone location: Exterior
TC Dead Load : 5.0 psf
BC Dead Load : 5.0 psf
Max comp. force 88 Lbs
Quality Control Factor 1.25

Truss Design Engineer: Philip J. O'Regan
License #: 58126
Address: P.O. Box 280055, Tampa, FL 33682

PHILIP J. O'REGAN LICENSE No. 58126 STATE OF FLORIDA PROFESSIONAL ENGINEER

Date Sealed: 8/28/2006

| Job | Mark | Quan | Type | Span | Pl-H1 | Left OH | Right OH | Engineering |
|---|---|---|---|---|---|---|---|---|
| whitt-bohlmann | P2 | 2 | HIPP | 60800 | 6 | 11- 5 | 11- 5 | T06082949 |

U# J#whitt-bohlmann BOHLMANN

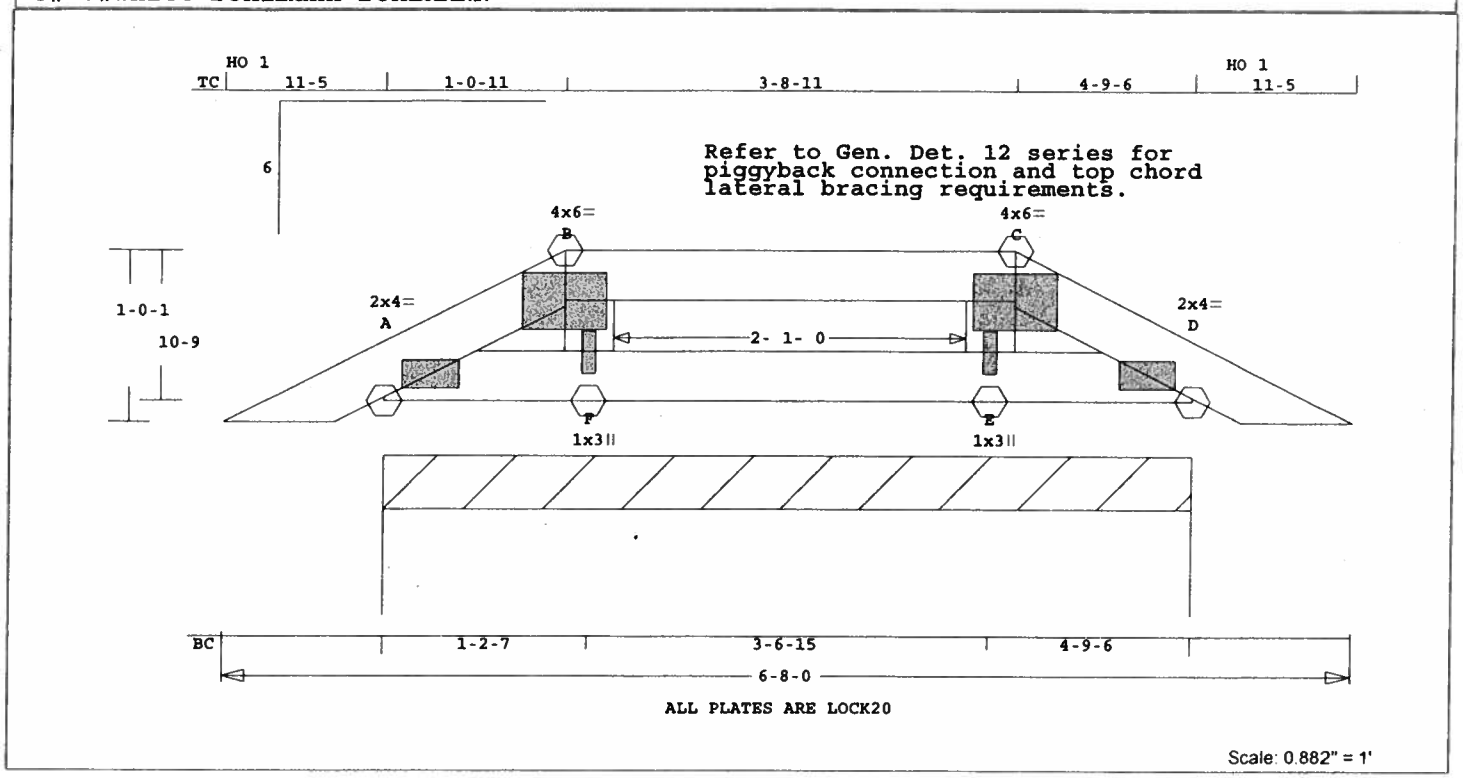


Robbins Engineering, Inc./Online Plus™ APPROX. TRUSS WEIGHT: 23.6 LBS

Online Plus -- Version 19.0.034
RUN DATE: 26-AUG-06

| | CSI | -Size- | ----Lumber---- |
|---|---|---|---|
| TC | 0.05 | 2x 4 | SP-#2 |
| BC | 0.02 | 2x 4 | SP-#2 |
| WB | 0.00 | 2x 4 | SP-#2 |

Brace truss as follows:

| | O.C. | From | To |
|---|---|---|---|
| TC Cont. | | 0- 0- 0 | 6- 8- 0 |
| BC Cont. | | 0- 0- 0 | 6- 8- 0 |

| Loading | Live | Dead | (psf) |
|---|---|---|---|
| TC | 20.0 | 10.0 | |
| BC | 0.0 | 10.0 | |
| Total | 20.0 | 20.0 | 40.0 |
| Spacing | | | 24.0" |

Lumber Duration Factor 1.25
Plate Duration Factor 1.25
TC Fb=1.15 Fc=1.10 Ft=1.10
BC Fb=1.10 Fc=1.10 Ft=1.10

Plus 6 Wind Load Case(s)
Plus 1 UBC LL Load Case(s)

| Jt | React Lbs | Uplft Lbs | Size In-Sx | Req'd In-Sx |
|---|---|---|---|---|
| Cont. | Brg | 0- 0- 0 to | | 4- 9- 6 |
| | 503 | 85 | Hz = | 8 |

| Membr | CSI | P Lbs | Axl-CSI-Bnd | |
|---|---|---|---|---|
| ----------Top Chords---------- | | | | |
| A -B | 0.00 | 22 C | | |
| B -C | 0.05 | 24 C | 0.00 | 0.05 |
| C -D | 0.00 | 22 C | | |
| --------Bottom Chords--------- | | | | |
| A -F | 0.02 | 1 T | 0.00 | 0.02 |
| F -E | 0.02 | 0 T | 0.00 | 0.02 |
| E -D | 0.02 | 1 T | 0.00 | 0.02 |
| ----------Webs---------- | | | | |
| F -B | 0.00 | 101 C | | |
| E -C | 0.00 | 101 C | | |

TL Defl 0.00" in F -E L/999
LL Defl 0.00" in F -E L/999
Shear // Grain in B -C 0.08

Plates for each ply each face.
PLATING CONFORMS TO TPI.
REPORT: NER 691
ROBBINS ENGINEERING, INC.
BASED ON SP LUMBER
USING GROSS AREA TEST.
Plate - LOCK 20 Ga, Gross Area
Plate - RHS 20 Ga, Gross Area

| Jt | Type | Plt Size | X | Y | JSI |
|---|---|---|---|---|---|
| A | LOCK | 2.0x 4.0 | Ctr | Ctr | 0.65 |
| B | LOCK | 4.0x 6.0 | Ctr | Ctr | 0.58 |
| C | LOCK | 4.0x 6.0 | Ctr | Ctr | 0.58 |
| D | LOCK | 2.0x 4.0 | Ctr | Ctr | 0.65 |
| F | LOCK | 1.0x 3.0 | Ctr | Ctr | 0.75 |
| E | LOCK | 1.0x 3.0 | Ctr | Ctr | 0.75 |

REVIEWED BY:
Robbins Engineering, Inc.
PO Box 280055
Tampa, FL 33682

REFER TO ROBBINS ENG. GENERAL NOTES AND SYMBOLS SHEET FOR ADDITIONAL SPECIFICATIONS.

NOTES:
Trusses Manufactured by:
Mayo Truss Co. Inc.

Analysis Conforms To:
FBC2004
OH Loading
Soffit psf 2.0
Design checked for 10 psf non-concurrent LL on BC.
Refer to Gen Det 3 series for web bracing and plating.
Wind Loads - ANSI / ASCE 7-02
Truss is designed as a Main Wind-Force Resistance System.
Wind Speed: 110 mph
Mean Roof Height: 15-0
Exposure Category: B
Occupancy Factor : 1.00
Building Type: Enclosed
Zone location: Exterior
TC Dead Load : 5.0 psf
BC Dead Load : 5.0 psf
Max comp. force 101 Lbs
Quality Control Factor 1.25

Truss Design Engineer: Philip J. O'Regan
License #: 58126
Address: P.O. Box 280055, Tampa, FL 33682

PHILIP J. O'REGAN
LICENSE
No. 58126
STATE OF FLORIDA
PROFESSIONAL ENGINEER

Date Sealed: 8/28/2006

| Job | Mark | Quan | Type | Span | Pl-Hl | Left OH | Right OH | Engineering |
|---|---|---|---|---|---|---|---|---|
| whitt-bohlmann | V1 | 1 | VLM.SB | 170214 | 6 | 0 | 0 | T06082949 |

U# J#whitt-bohlmann BOHLMANN

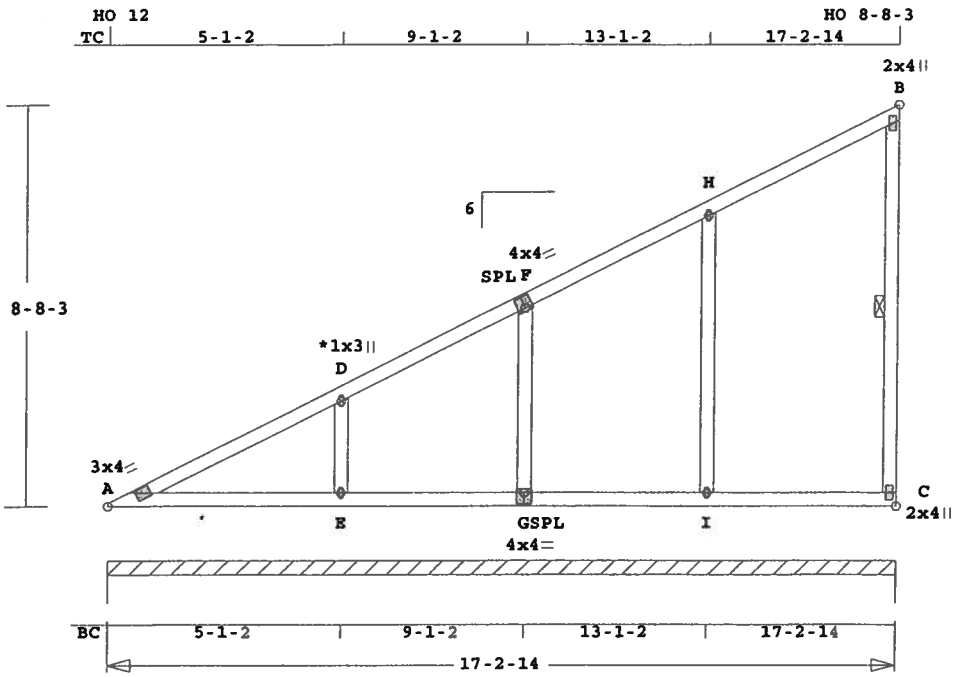


ALL PLATES ARE LOCK20

See Joint D For Typical Gable Plate Size and Placement

Scale: 0.239" = 1'

Robbins Engineering, Inc./Online Plus™ APPROX. TRUSS WEIGHT: 106.3 LBS

Online Plus -- Version 19.0.034
RUN DATE: 26-AUG-06

| | CSI | -Size- | ----Lumber---- |
|---|---|---|---|
| TC | 0.22 | 2x 4 | SP-#2 |
| BC | 0.15 | 2x 4 | SP-#2 |
| WB | 0.18 | 2x 4 | SP-#2 |
| GW | 0.06 | 2x 4 | SP-#2 |

Brace truss as follows:

| O.C. | From | To |
|---|---|---|
| TC Cont. | 0- 0- 0 | 17- 2-14 |
| BC Cont. | 0- 0- 0 | 17- 2-14 |

WB 1 rows CLB on C -B
Attach CLB with (2)-10d nails at each web.

| Loading | Live | Dead | (psf) |
|---|---|---|---|
| TC | 20.0 | 10.0 | |
| BC | 0.0 | 10.0 | |
| Total | 20.0 | 20.0 | 40.0 |
| Spacing | | | 24.0" |

Lumber Duration Factor 1.25
Plate Duration Factor 1.25
TC Fb=1.15 Fc=1.10 Ft=1.10
BC Fb=1.10 Fc=1.10 Ft=1.10

Plus 5 Wind Load Case(s)
Plus 1 UBC LL Load Case(s)

| Jt | React Lbs | Uplft Lbs | Size Req'd In-Sx In-Sx |
|---|---|---|---|
| Cont. | Brg | 0- 0- 0 | to 17- 2-14 |
| | 1497 | 134 | Hz = 524 |

| Membr | CSI | P Lbs | Axl-CSI-Bnd |
|---|---|---|---|
| ----------Top Chords---------- | | | |
| A -D | 0.22 | 225 C | 0.00 0.22 |
| D -F | 0.16 | 182 C | 0.00 0.16 |
| F -H | 0.16 | 139 C | 0.00 0.16 |
| H -B | 0.17 | 79 C | 0.00 0.17 |
| --------Bottom Chords--------- | | | |
| A -E | 0.13 | 2 C | 0.00 0.13 |
| E -G | 0.10 | 0 T | 0.00 0.10 |
| G -I | 0.09 | 0 T | 0.00 0.09 |
| I -C | 0.15 | 0 T | 0.00 0.15 |
| ----------Webs---------- | | | |
| C -B | 0.18 | 110 C | 0.00 0.18 |
| ----------Gable Webs---------- | | | |
| E -D | 0.06 | 266 C | 0.00 0.06 |
| G -F | 0.01 | 232 C | 0.01 0.00 |
| I -H | 0.02 | 259 C | 0.01 0.01 |

TL Defl -0.02" in A -E L/999
LL Defl -0.01" in A -E L/999
Shear // Grain in A -D 0.18

Plates for each ply each face.
PLATING CONFORMS TO TPI.
REPORT: NER 691
ROBBINS ENGINEERING, INC.
BASED ON SP LUMBER
USING GROSS AREA TEST.
Plate - LOCK 20 Ga, Gross Area
Plate - RHS 20 Ga, Gross Area

| Jt | Type | Plt Size | X | Y | JSI |
|---|---|---|---|---|---|
| A | LOCK | 3.0x 4.0 | Ctr | Ctr | 0.72 |
| D | LOCK | 1.0x 3.0 | Ctr | Ctr | 0.75 |
| F | LOCK | 4.0x 4.0 | -0.5 | 0.9 | 0.53 |
| H | LOCK | 1.0x 3.0 | Ctr | Ctr | 0.75 |
| B | LOCK | 2.0x 4.0 | Ctr | Ctr | 0.38 |
| E | LOCK | 1.0x 3.0 | Ctr | Ctr | 0.81 |
| G | LOCK | 4.0x 4.0 | Ctr | -1.0 | 0.54 |
| I | LOCK | 1.0x 3.0 | Ctr | Ctr | 0.81 |
| C | LOCK | 2.0x 4.0 | Ctr | Ctr | 0.40 |

REVIEWED BY:
Robbins Engineering, Inc.
PO Box 280055
Tampa, FL 33682

REFER TO ROBBINS ENG. GENERAL NOTES AND SYMBOLS SHEET FOR ADDITIONAL SPECIFICATIONS.

NOTES:

Trusses Manufactured by:
Mayo Truss Co. Inc.
Analysis Conforms To:
FBC2004
Provide connection to bearing for 524 Lbs Horiz Reaction
Design checked for 10 psf non-concurrent LL on BC.
Wind Loads - ANSI / ASCE 7-02
Truss is designed as a Main Wind-Force Resistance System.
Wind Speed: 110 mph
Mean Roof Height: 15-0
Exposure Category: B
Occupancy Factor : 1.00
Building Type: Enclosed
Zone location: Exterior
TC Dead Load : 5.0 psf
BC Dead Load : 5.0 psf
Max comp. force 266 Lbs
Quality Control Factor 1.25

Truss Design Engineer: Philip J. O'Regan
License #: 58126
Address: P.O. Box 280055, Tampa, FL 33682

PHILIP J. O'REGAN
LICENSE
No. 58126
STATE OF FLORIDA
PROFESSIONAL ENGINEER



Date Sealed: 8/28/2006

| Job | Mark | Quan | Type | Span | P1-H1 | Left OH | Right OH | Engineering |
|---|---|---|---|---|---|---|---|---|
| whitt-bohlmann | V2 | 1 | VLM.SB | 150214 | 6 | 0 | 0 | T06082949 |

U# J#whitt-bohlmann BOHLMANN

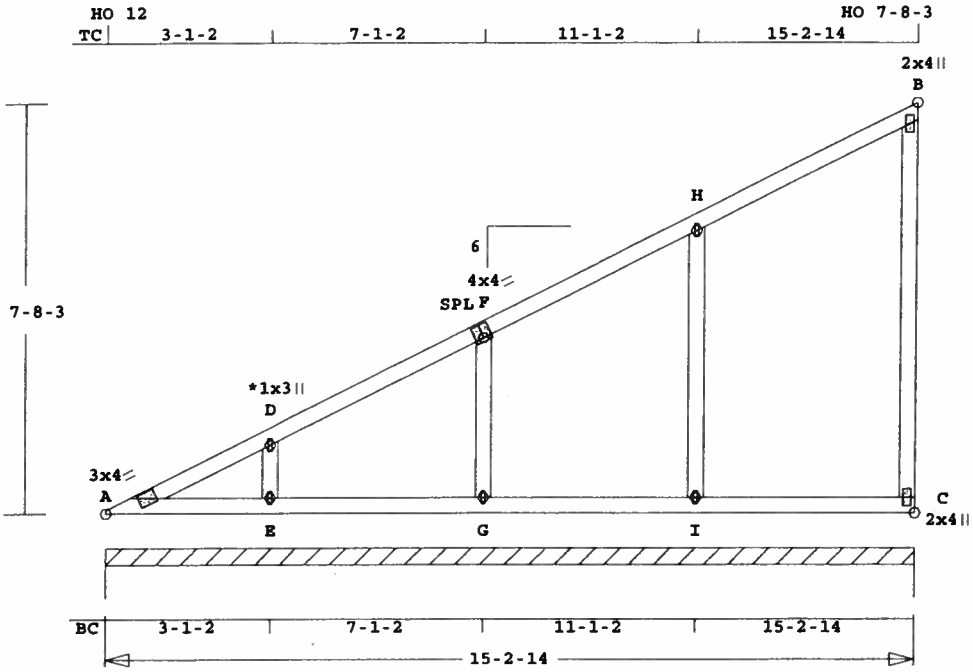


ALL PLATES ARE LOCK20

See Joint D For Typical Gable Plate Size and Placement

Scale: 0.276" = 1'

Robbins Engineering, Inc./Online Plus™ APPROX. TRUSS WEIGHT: 90.7 LBS

Online Plus -- Version 19.0.034
RUN DATE: 26-AUG-06

| | CSI | -Size- | ----Lumber---- |
|---|---|---|---|
| TC | 0.17 | 2x 4 | SP-#2 |
| BC | 0.11 | 2x 4 | SP-#2 |
| WB | 0.14 | 2x 4 | SP-#2 |
| GW | 0.04 | 2x 4 | SP-#2 |

Brace truss as follows:

| O.C. | From | To |
|---|---|---|
| TC Cont. | 0- 0- 0 | 15- 2-14 |
| BC Cont. | 0- 0- 0 | 15- 2-14 |

| Loading | Live | Dead | (psf) |
|---|---|---|---|
| TC | 20.0 | 10.0 | |
| BC | 0.0 | 10.0 | |
| Total | 20.0 | 20.0 | 40.0 |
| Spacing | | | 24.0" |

Lumber Duration Factor 1.25
Plate Duration Factor 1.25
TC Fb=1.15 Fc=1.10 Ft=1.10
BC Fb=1.10 Fc=1.10 Ft=1.10

Plus 5 Wind Load Case(s)
Plus 1 UBC LL Load Case(s)

| Jt | React Lbs | Uplft Lbs | Size In-Sx | Req'd In-Sx |
|---|---|---|---|---|
| Cont. | Brg 1250 | 0- 0- 0 to 103 Hz = | | 15- 2-14 459 |

| Membr | CSI | P Lbs | Axl | CSI | Bnd |
|---|---|---|---|---|---|
| ----------Top Chords---------- | | | | | |
| A -D | 0.09 | 206 | C | 0.00 | 0.09 |
| D -F | 0.14 | 173 | C | 0.00 | 0.14 |
| F -H | 0.15 | 130 | C | 0.00 | 0.15 |
| H -B | 0.17 | 73 | C | 0.00 | 0.17 |
| --------Bottom Chords--------- | | | | | |
| A -E | 0.05 | 1 | C | 0.00 | 0.05 |
| E -G | 0.08 | 0 | T | 0.00 | 0.08 |
| G -I | 0.09 | 0 | T | 0.00 | 0.09 |
| I -C | 0.11 | 0 | T | 0.00 | 0.11 |
| ----------Webs---------- | | | | | |
| C -B | 0.14 | 110 | C | 0.00 | 0.14 |
| ----------Gable Webs---------- | | | | | |
| E -D | 0.04 | 219 | C | 0.00 | 0.04 |
| G -F | 0.01 | 239 | C | 0.01 | 0.00 |
| I -H | 0.02 | 257 | C | 0.01 | 0.01 |

TL Defl -0.01" in I -C L/999
LL Defl -0.01" in I -C L/999
Shear // Grain in H -B 0.15

Plates for each ply each face.
PLATING CONFORMS TO TPI.
REPORT: NER 691
ROBBINS ENGINEERING, INC.
BASED ON SP LUMBER
USING GROSS AREA TEST.
Plate - LOCK 20 Ga, Gross Area
Plate - RHS 20 Ga, Gross Area

| Jt | Type | Plt Size | X | Y | JSI |
|---|---|---|---|---|---|
| A | LOCK | 3.0x 4.0 | Ctr | Ctr | 0.69 |
| D | LOCK | 1.0x 3.0 | Ctr | Ctr | 0.75 |
| F | LOCK | 4.0x 4.0 | -0.5 | 0.9 | 0.50 |
| H | LOCK | 1.0x 3.0 | Ctr | Ctr | 0.75 |
| B | LOCK | 2.0x 4.0 | Ctr | Ctr | 0.38 |
| E | LOCK | 1.0x 3.0 | Ctr | Ctr | 0.75 |
| G | LOCK | 1.0x 3.0 | Ctr | Ctr | 0.75 |
| I | LOCK | 1.0x 3.0 | Ctr | Ctr | 0.75 |
| C | LOCK | 2.0x 4.0 | Ctr | Ctr | 0.38 |

REVIEWED BY:
Robbins Engineering, Inc.
PO Box 280055
Tampa, FL 33682

REFER TO ROBBINS ENG. GENERAL NOTES AND SYMBOLS SHEET FOR ADDITIONAL SPECIFICATIONS.

NOTES:
Trusses Manufactured by:
Mayo Truss Co. Inc.
Analysis Conforms To:
FBC2004
Provide connection to bearing for 459 Lbs Horiz Reaction
Design checked for 10 psf non-concurrent LL on BC.
Wind Loads - ANSI / ASCE 7-02
Truss is designed as a Main Wind-Force Resistance System.
Wind Speed: 110 mph
Mean Roof Height: 15-0
Exposure Category: B
Occupancy Factor : 1.00
Building Type: Enclosed
Zone location: Exterior
TC Dead Load : 5.0 psf
BC Dead Load : 5.0 psf
Max comp. force 257 Lbs
Quality Control Factor 1.25

Truss Design Engineer: Philip J. O'Regan
License #: 58126
Address: P.O. Box 280055, Tampa, FL 33682

PHILIP J. O'REGAN LICENSE No. 58126 STATE OF FLORIDA PROFESSIONAL ENGINEER

Date Sealed: 8/28/2006

| Job | Mark | Quan | Type | Span | P1-H1 | Left OH | Right OH | Engineering |
|---|---|---|---|---|---|---|---|---|
| whitt-bohlmann | V3 | 1 | VLMHP.SB | 130214 | 6 | 0 | 0 | T06082949 |

U# J#whitt-bohlmann BOHLMANN

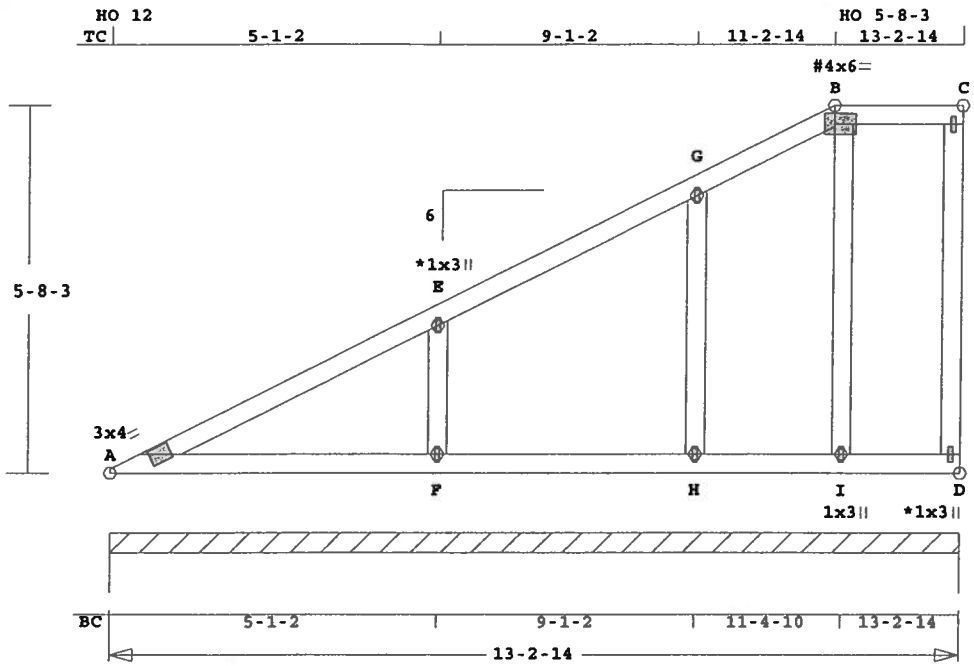


ALL PLATES ARE LOCK20, # = PLATE SELECTED IN PLATE MONITOR

See Joint E For Typical Gable Plate Size and Placement

Scale: 0.334" = 1'

Robbins Engineering, Inc./Online Plus™ APPROX. TRUSS WEIGHT: 82.4 LBS

Online Plus -- Version 19.0.034
RUN DATE: 26-AUG-06

| | CSI | -Size- | ----Lumber---- |
|---|---|---|---|
| TC | 0.22 | 2x 4 | SP-#2 |
| BC | 0.14 | 2x 4 | SP-#2 |
| WB | 0.07 | 2x 4 | SP-#2 |
| GW | 0.05 | 2x 4 | SP-#2 |

Brace truss as follows:

| O.C. | From | To |
|---|---|---|
| TC Cont. | 0- 0- 0 | 13- 2-14 |
| BC Cont. | 0- 0- 0 | 13- 2-14 |

| Loading | Live | Dead | (psf) |
|---|---|---|---|
| TC | 20.0 | 10.0 | |
| BC | 0.0 | 10.0 | |
| Total | 20.0 | 20.0 | 40.0 |
| Spacing | | | 24.0" |

Lumber Duration Factor 1.25
Plate Duration Factor 1.25
TC Fb=1.15 Fc=1.10 Ft=1.10
BC Fb=1.10 Fc=1.10 Ft=1.10

Plus 6 Wind Load Case(s)
Plus 1 UBC LL Load Case(s)

| Jt | React Lbs | Uplft Lbs | Size In-Sx | Req'd In-Sx |
|---|---|---|---|---|
| Cont. | Brg | 0- 0- 0 | to | 13- 2-14 |
| | 1437 | 133 | Hz = | 320 |

| Membr | CSI | P Lbs | Axl-CSI-Bnd | |
|---|---|---|---|---|
| ----------Top Chords---------- | | | | |
| A -E | 0.22 | 135 C | 0.00 | 0.22 |
| E -G | 0.18 | 67 C | 0.00 | 0.18 |
| G -B | 0.12 | 22 C | 0.00 | 0.12 |
| B -C | 0.18 | 0 T | 0.00 | 0.18 |
| --------Bottom Chords--------- | | | | |
| A -F | 0.14 | 2 C | 0.00 | 0.14 |
| F -H | 0.10 | 0 T | 0.00 | 0.10 |
| H -I | 0.07 | 0 T | 0.00 | 0.07 |
| I -D | 0.10 | 0 T | 0.00 | 0.10 |
| ----------Webs---------- | | | | |
| I -B | 0.07 | 100 C | 0.00 | 0.07 |
| ----------Gable Webs---------- | | | | |
| F -E | 0.05 | 274 C | 0.00 | 0.05 |
| H -G | 0.04 | 157 C | 0.00 | 0.04 |

TL Defl -0.02" in A -F L/999
LL Defl -0.01" in A -F L/999
Shear // Grain in A -E 0.18

Plates for each ply each face.
PLATING CONFORMS TO TPI.
REPORT: NER 691
ROBBINS ENGINEERING, INC.
BASED ON SP LUMBER
USING GROSS AREA TEST.
Plate - LOCK 20 Ga, Gross Area
Plate - RHS 20 Ga, Gross Area

| Jt | Type | Plt Size | X | Y | JSI |
|---|---|---|---|---|---|
| A | LOCK | 3.0x 4.0 | Ctr | Ctr | 0.63 |
| E | LOCK | 1.0x 3.0 | Ctr | Ctr | 0.75 |
| G | LOCK | 1.0x 3.0 | Ctr | Ctr | 0.75 |
| B# | LOCK | 4.0x 6.0 | -0.6 | 0.1 | 0.25 |
| F | LOCK | 1.0x 3.0 | Ctr | Ctr | 0.75 |
| H | LOCK | 1.0x 3.0 | Ctr | Ctr | 0.75 |
| I | LOCK | 1.0x 3.0 | Ctr | Ctr | 0.75 |

# = Plate Monitor used
1 Gable studs to be attached with 2.0x4.0 plates each end.

REVIEWED BY:
Robbins Engineering, Inc.
PO Box 280055
Tampa, FL 33682

REFER TO ROBBINS ENG. GENERAL NOTES AND SYMBOLS SHEET FOR ADDITIONAL SPECIFICATIONS.

NOTES:
Trusses Manufactured by:
Mayo Truss Co. Inc.
Analysis Conforms To:
FBC2004
Provide connection to bearing for 319 Lbs Horiz Reaction
Design checked for 10 psf non-concurrent LL on BC.
NOTE: USER MODIFIED PLATES
This design may have plates selected through a plate monitor.
Wind Loads - ANSI / ASCE 7-02
Truss is designed as a Main Wind-Force Resistance System.
Wind Speed: 110 mph
Mean Roof Height: 15-0
Exposure Category: B
Occupancy Factor : 1.00
Building Type: Enclosed
Zone location: Exterior
TC Dead Load : 5.0 psf
BC Dead Load : 5.0 psf
Max comp. force 274 Lbs
Quality Control Factor 1.25

Truss Design Engineer: Philip J. O'Regan
License #: 58126
Address: P.O. Box 280055, Tampa, FL 33682

PHILIP J. O'REGAN LICENSE No. 58126 STATE OF FLORIDA PROFESSIONAL ENGINEER



Date Sealed: 8/28/2006

| Job | Mark | Quan | Type | Span | Pl-H1 | Left OH | Right OH | Engineering |
|---|---|---|---|---|---|---|---|---|
| whitt-bohlmann | V4 | 1 | VLMHP.SB | 110214 | 6 | 0 | 0 | T06082949 |

U# J#whitt-bohlmann BOHLMANN

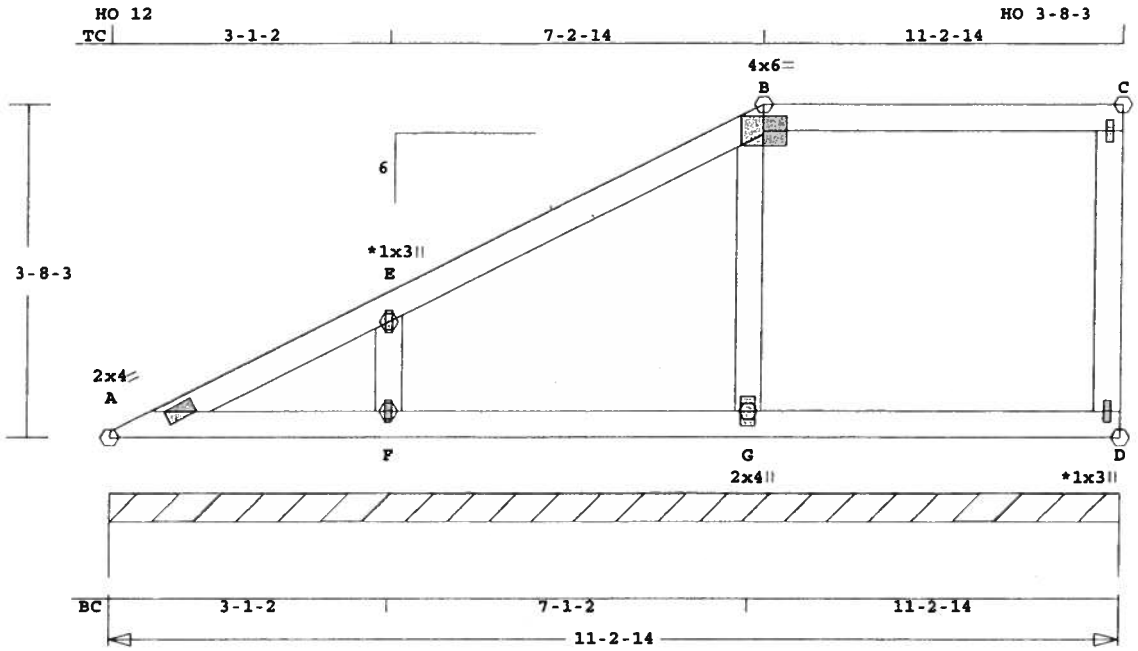


ALL PLATES ARE LOCK20

See Joint E For Typical Gable Plate Size and Placement

Scale: 0.467" = 1'

Robbins Engineering, Inc./Online Plus™ APPROX. TRUSS WEIGHT: 56.8 LBS

Online Plus -- Version 19.0.034
RUN DATE: 26-AUG-06

| | CSI | -Size- | ----Lumber---- |
|---|---|---|---|
| TC | 0.87 | 2x 4 | SP-#2 |
| BC | 0.54 | 2x 4 | SP-#2 |
| GW | 0.50 | 2x 4 | SP-#2 |

Brace truss as follows:

| | O.C. | From | To |
|---|---|---|---|
| TC Cont. | | 0- 0- 0 | 11- 2-14 |
| BC Cont. | | 0- 0- 0 | 11- 2-14 |

| Loading | Live | Dead | (psf) |
|---|---|---|---|
| TC | 20.0 | 10.0 | |
| BC | 0.0 | 10.0 | |
| Total | 20.0 | 20.0 | 40.0 |
| Spacing | | | 24.0" |

Lumber Duration Factor 1.25
Plate Duration Factor 1.25
TC Fb=1.15 Fc=1.10 Ft=1.10
BC Fb=1.10 Fc=1.10 Ft=1.10

Plus 6 Wind Load Case(s)
Plus 1 UBC LL Load Case(s)

| Jt | React Lbs | Uplft Lbs | Size Req'd In-Sx | In-Sx |
|---|---|---|---|---|
| Cont. Brg | 1506 | 0- 0- 0 166 | to Hz = | 11- 2-14 206 |

| Membr | CSI | P Lbs | Axl-CSI-Bnd |
|---|---|---|---|
| ----------Top Chords---------- | | | |
| A -E | 0.07 | 123 T | 0.02 0.05 |
| E -B | 0.48 | 164 T | 0.03 0.45 |
| B -C | 0.87 | 0 T | 0.00 0.87 |
| --------Bottom Chords--------- | | | |
| A -F | 0.04 | 2 C | 0.00 0.04 |
| F -G | 0.28 | 0 T | 0.00 0.28 |
| G -D | 0.54 | 0 T | 0.00 0.54 |
| ----------Gable Webs---------- | | | |
| F -E | 0.03 | 138 C | 0.00 0.03 |
| G -B | 0.50 | 244 C | 0.00 0.50 |

TL Defl -0.17" in G -D L/815
LL Defl -0.09" in G -D L/999
Shear // Grain in B -C 0.31

Plates for each ply each face.
PLATING CONFORMS TO TPI.
REPORT: NER 691
ROBBINS ENGINEERING, INC.
BASED ON SP LUMBER
USING GROSS AREA TEST.
Plate - LOCK 20 Ga, Gross Area
Plate - RHS 20 Ga, Gross Area

| Jt | Type | Plt Size | X | Y | JSI |
|---|---|---|---|---|---|
| A | LOCK | 2.0x 4.0 | Ctr | Ctr | 0.70 |
| E | LOCK | 1.0x 3.0 | Ctr | Ctr | 0.75 |
| B | LOCK | 4.0x 6.0 | Ctr | Ctr | 0.62 |
| F | LOCK | 1.0x 3.0 | Ctr | Ctr | 0.75 |
| G | LOCK | 2.0x 4.0 | Ctr | Ctr | 0.38 |

1 Gable studs to be attached with 2.0x4.0 plates each end.

REVIEWED BY:
Robbins Engineering, Inc.
PO Box 280055
Tampa, FL 33682

REFER TO ROBBINS ENG. GENERAL NOTES AND SYMBOLS SHEET FOR ADDITIONAL SPECIFICATIONS.

NOTES:
Trusses Manufactured by:
Mayo Truss Co. Inc.
Analysis Conforms To:
FBC2004
Design checked for 10 psf non-concurrent LL on BC.
Wind Loads - ANSI / ASCE 7-02
Truss is designed as a Main Wind-Force Resistance System.
Wind Speed: 110 mph
Mean Roof Height: 15-0
Exposure Category: B
Occupancy Factor : 1.00
Building Type: Enclosed
Zone location: Exterior
TC Dead Load : 5.0 psf
BC Dead Load : 5.0 psf
Max comp. force 244 Lbs
Quality Control Factor 1.25

Truss Design Engineer: Philip J. O'Regan
License #: 58126
Address: P.O. Box 280055, Tampa, FL 33682

PHILIP J. O'REGAN
LICENSE
No. 58126
STATE OF
FLORIDA
PROFESSIONAL ENGINEER

Date Sealed: 8/28/2006

| Job | Mark | Quan | Type | Span | P1-H1 | Left OH | Right OH | Engineering |
|---|---|---|---|---|---|---|---|---|
| whitt-bohlmann | V5 | 1 | VLMHP.SB | 90214 | 6 | 0 | 0 | T06082949 |

U# J#whitt-bohlmann BOHLMANN

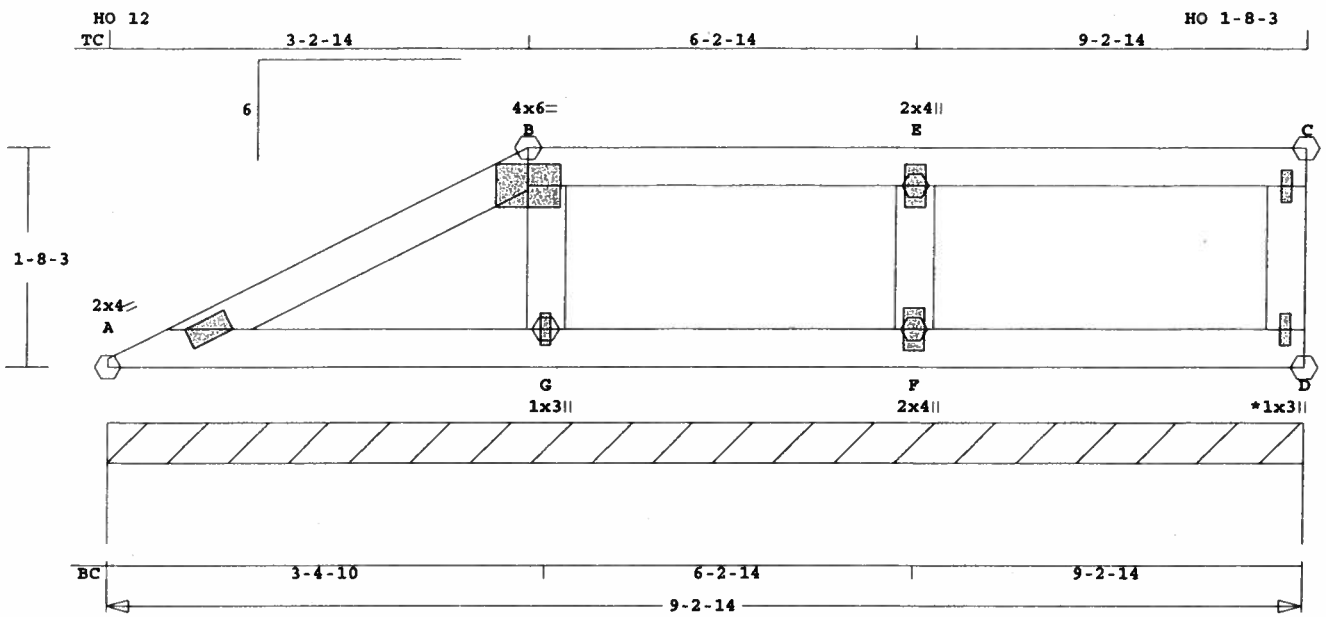


ALL PLATES ARE LOCK20

See * For Typical Gable Plate Size and Placement

Scale: 0.673" = 1'

Robbins Engineering, Inc./Online Plus™ APPROX. TRUSS WEIGHT: 40.9 LBS

Online Plus -- Version 19.0.034
RUN DATE: 26-AUG-06

| | CSI | -Size- | ----Lumber---- |
|---|---|---|---|
| TC | 0.49 | 2x 4 | SP-#2 |
| BC | 0.28 | 2x 4 | SP-#2 |
| WB | 0.04 | 2x 4 | SP-#2 |
| GW | 0.28 | 2x 4 | SP-#2 |

Brace truss as follows:

| | O.C. | From | To |
|---|---|---|---|
| TC Cont. | | 0- 0- 0 | 9- 2-14 |
| BC Cont. | | 0- 0- 0 | 9- 2-14 |

| Loading | Live | Dead | (psf) |
|---|---|---|---|
| TC | 20.0 | 10.0 | |
| BC | 0.0 | 10.0 | |
| Total | 20.0 | 20.0 | 40.0 |
| Spacing | | | 24.0" |

Lumber Duration Factor 1.25
Plate Duration Factor 1.25
TC Fb=1.15 Fc=1.10 Ft=1.10
BC Fb=1.10 Fc=1.10 Ft=1.10

Plus 6 Wind Load Case(s)
Plus 1 UBC LL Load Case(s)

| Jt | React Lbs | Uplft Lbs | Size In-Sx | Req'd In-Sx |
|---|---|---|---|---|
| Cont. Brg | 1151 | 0- 0- 0 to 191 | Hz = | 9- 2-14 78 |

| Membr | CSI | P Lbs | Axl-CSI-Bnd |
|---|---|---|---|
| ----------Top Chords---------- | | | |
| A -B | 0.08 | 122 T | 0.02 0.06 |
| B -E | 0.26 | 138 T | 0.02 0.24 |
| E -C | 0.49 | 0 T | 0.00 0.49 |
| --------Bottom Chords--------- | | | |
| A -G | 0.05 | 2 C | 0.00 0.05 |
| G -F | 0.13 | 0 T | 0.00 0.13 |
| F -D | 0.28 | 0 T | 0.00 0.28 |
| ----------Webs---------- | | | |
| G -B | 0.04 | 180 C | 0.00 0.04 |
| ----------Gable Webs---------- | | | |
| F -E | 0.28 | 154 C | 0.00 0.28 |

TL Defl -0.05" in F -D L/999
LL Defl -0.02" in F -D L/999
Shear // Grain in E -C 0.23

Plates for each ply each face.
PLATING CONFORMS TO TPI.
REPORT: NER 691
ROBBINS ENGINEERING, INC.
BASED ON SP LUMBER
USING GROSS AREA TEST.
Plate - LOCK 20 Ga, Gross Area
Plate - RHS 20 Ga, Gross Area

| Jt | Type | Plt Size | X | Y | JSI |
|---|---|---|---|---|---|
| A | LOCK | 2.0x 4.0 | Ctr | Ctr | 0.68 |
| B | LOCK | 4.0x 6.0 | Ctr | Ctr | 0.61 |
| E | LOCK | 2.0x 4.0 | Ctr | Ctr | 0.38 |
| G | LOCK | 1.0x 3.0 | Ctr | Ctr | 0.75 |
| F | LOCK | 2.0x 4.0 | Ctr | Ctr | 0.38 |

1 Gable studs to be attached with 2.0x4.0 plates each end.

REVIEWED BY:
Robbins Engineering, Inc.
PO Box 280055
Tampa, FL 33682

REFER TO ROBBINS ENG. GENERAL NOTES AND SYMBOLS SHEET FOR ADDITIONAL SPECIFICATIONS.

NOTES:
Trusses Manufactured by:
Mayo Truss Co. Inc.
Analysis Conforms To:
FBC2004
Design checked for 10 psf non-concurrent LL on BC.
Wind Loads - ANSI / ASCE 7-02
Truss is designed as a Main Wind-Force Resistance System.
Wind Speed: 110 mph
Mean Roof Height: 15-0
Exposure Category: B
Occupancy Factor : 1.00
Building Type: Enclosed
Zone location: Exterior
TC Dead Load : 5.0 psf
BC Dead Load : 5.0 psf
Max comp. force 180 Lbs
Quality Control Factor 1.25

Truss Design Engineer: Philip J. O'Regan
License #: 58126
Address: P.O. Box 280055, Tampa, FL 33682

PHILIP J. O'REGAN LICENSE No. 58126 STATE OF FLORIDA PROFESSIONAL ENGINEER

Date Sealed: 8/28/2006

# ROBBINS ENG. GENERAL NOTES & SYMBOLS

## PLATE LOCATION

108

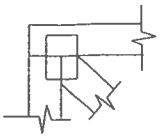

Center plates on joints unless otherwise noted in plate list or on drawing. Dimensions are given in inches (i.e. 1 1/2" or 1.5" ) or IN-16ths (i.e. 108)

## FLOOR TRUSS SPLICE

( 3X2, 4X2, 6X2 )

(W) = Wide Face Plate
(N) = Narrow Face Plate

## LATERAL BRACING

Designates the location for continuous lateral bracing (CLB) for support of individual truss members only. CLBs must be properly anchored or restrained to prevent simultaneous buckling of adjacent truss members.

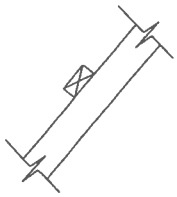

## PLATE SIZE AND ORIENTATION

3x5

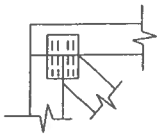

The first dimension is the width measured perpendicular to slots. The second dimension is the length measured parallel to slots. Plate orientation, shown next to plate size, indicates direction of slots in connector plates.

## DIMENSIONS

All dimensions are shown in FT-IN-SX (i.e. 6' 8 1/2" or 6-08-08 ). Dimensions less than one foot are shown in IN-SX only (i.e. 708).

6-08-08

708

## BEARING

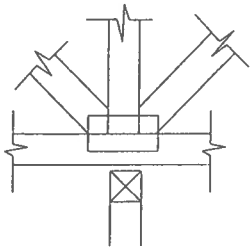

W = Actual Bearing Width (IN-SX)
R = Reaction (lbs.)
U = Uplift (lbs.)

When truss is designed to bear on multiple supports, interior bearing locations should be marked on the truss. Interior support or temporary shoring must be in place before erecting this truss. If necessary, shim bearings to assure solid contact with truss.

ROBBINS connector plates shall be applied on both faces of truss at each joint. Center the plates, unless indicated otherwise. No loose knots or wane in plate contact area. Splice only where shown. Overall spans assume 4" bearing at each end, unless indicated otherwise. Cutting and fabrication shall be performed using equipment which produces snug-fitting joints and plates. Unless otherwise noted, moisture content of lumber shall not exceed 19% at time of fabrication and the attached truss designs are not applicable for use with fire retardant lumber and some preservative treatments. Nails specified on truss design drawings refer to common wire nails, except as noted.
The attached design drawings were prepared in accordance with " National Design Specifications for Wood Construction" (AF & PA )," National Design Standard for Metal Plate Connected Wood Truss Construction" (ANSI/TPI 1), and HUD Design Criteria for Trussed Rafters.

Robbins Eng. Co. bears no responsibility for the erection of trusses, field bracing or permanent truss bracing. Refer to BCSI 1-03 as published by Truss Plate Institute, 218 North Lee Street, Suite 312, Alexandria, Virginia 22314. Persons erecting trusses are cautioned to seek professional advice concerning proper erection bracing to prevent toppling and " dominoing ". Care should be taken to prevent damage during fabrication, storage, shipping and erection. Top and bottom chords shall be adequately braced in the absence of sheathing or rigid ceiling, respectively. It is the responsibility of others to ascertain that design loads utilized on these drawings meet or exceed the actual dead loads imposed by the structure and the live loads imposed by the local building code or historical climatic records.

FURNISH A COPY OF THE ATTACHED TRUSS DESIGN DRAWINGS TO ERECTION CONTRACTOR. IT IS THE RESPONSIBILITY OF THE BUILDING DESIGNER TO REVIEW THESE DRAWINGS AND VERIFY THAT DATA, INCLUDING DIMENSIONS & LOADS, CONFORM TO ARCHITECTURAL PLAN / SPECS AND THE TRUSS PLACEMENT DIAGRAM FURNISHED BY THE TRUSS FABRICATOR.

Robbins Engineering, Inc.

6904 Parke East Blvd.
Tampa, Fl 33610-4115
Tel: 813-972-1135 Fax: 813-971-6117

www.robbinseng.com

Permit Number: _____ Lot Number: _____

Miscellaneous: _____ Address: _____

The information in this box is for administrative purposes only and is not part of the engineering review.

Truss Fabricator:Mayo Truss Company, Inc

Job Reference:whitt-bohlmann - BOHLMANN

**Standard Loading:**

| | |
|---|---|
| T.C. Live | 20 psf |
| T.C Dead | 10 psf |
| B.C Live | 0 psf |
| B.C Dead | 10 psf |
| Total | 40 psf |

ROBBINS ENGINEERING, INC.

P.O. Box 280055
Tampa, FL 33682-0055
Phone: (813) 972-1135

# Engineering Index Sheet

Index Page 1 of 1

ANSI/ASCE 7-02
Wind Speed - 110 MPH
Mean Roof Ht. - 15 FT
Exposure Catergory - B
Occupancy Factor - 1.00
MWFRS
Enclosed

| Job Number | Date | FBC - 2004 Chapter 16 and 23 | Specification Quantity |
|---|---|---|---|
| T06082951 | 08/28/2006 | | 6 |

A Professional Engineer's seal affixed to this Index Sheet indicates the acceptance of Professional Engineering responsibilities for individual truss components fabricated in accordance with the listed and attached Truss Specification Sheets. Determination as to the suitability of these individual truss components for any structure is the responsibilty of the Building Designer, as defined in ANSI/TPI 1-2002, Section 2.2. Permanent files of the original Truss Specificstion Sheet are maintained by Robbins Engineering, Inc. Questions regarding this Index Sheet and/or the attached Specification Sheets may be directed to the truss fabricator listed above or Robbins Engineering, Inc. (Sofware - Online Plus)

Notes: Refer to individual truss design drawings for special loading conditions.

| | Date | Mark | | Date | Mark | | Date | Mark | | Date | Mark |
|---|---|---|---|---|---|---|---|---|---|---|---|
| 1 | 08/28/06 | A10 | 2 | 08/28/06 | A12 | 3 | 08/28/06 | A14 | 4 | 08/28/06 | A16 |
| 5 | 08/28/06 | A18 | 6 | 08/28/06 | A20 | | | | | | |

Truss Design Engineer: Thomas A. Albani
License #: 39380
Address: P.O. Box 280055, Tampa, FL 33682

THOMAS ALBANI LICENSE No. 39380 STATE OF FLORIDA PROFESSIONAL ENGINEER

Date Sealed: 8/28/2006

| Job | Mark | Quan | Type | Span | P1-H1 | Left OH | Right OH | Engineering |
|---|---|---|---|---|---|---|---|---|
| whitt-bohlmann | A10 | 1 | SP | 290800 | 6 | 0 | 2- 0- 0 | T06082951 |

U# J#whitt-bohlmann BOHLMANN

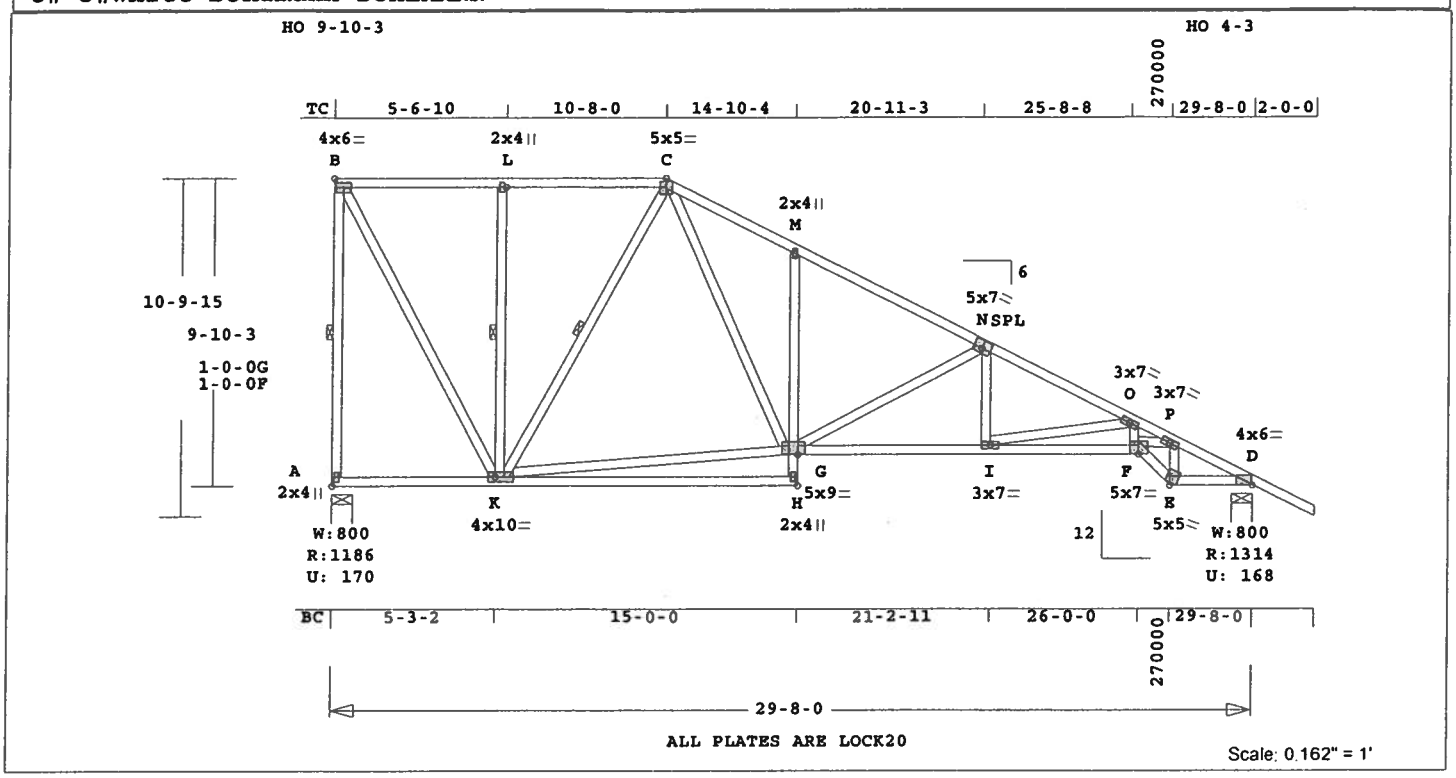


Robbins Engineering, Inc./Online Plus™ APPROX. TRUSS WEIGHT: 277.3 LBS

Online Plus -- Version 19.0.034
RUN DATE: 26-AUG-06

| | CSI | -Size- | ----Lumber---- |
|---|---|---|---|
| TC | 0.42 | 2x 4 | SP-#2 |
| BC | 0.89 | 2x 4 | SP-#2 |
| EX F -E | | 2x 4 | SP-#1 |
| CW | 0.13 | 2x 4 | SP-#2 |
| WB | 0.57 | 2x 4 | SP-#2 |

Brace truss as follows:

| O.C. | From | To |
|---|---|---|
| TC Cont. | 0- 0- 0 | 29- 8- 0 |
| BC Cont. | 0- 0- 0 | 29- 8- 0 |

WB 1 rows CLB on A -B
WB 1 rows CLB on K -L
WB 1 rows CLB on K -C
Attach CLB with (2)-10d nails at each web.

| Loading | Live | Dead | (psf) |
|---|---|---|---|
| TC | 20.0 | 10.0 | |
| BC | 0.0 | 10.0 | |
| Total | 20.0 | 20.0 | 40.0 |
| Spacing | | | 24.0" |

Lumber Duration Factor 1.25
Plate Duration Factor 1.25
TC Fb=1.15 Fc=1.10 Ft=1.10
BC Fb=1.10 Fc=1.10 Ft=1.10

Plus 6 Wind Load Case(s)
Plus 1 UBC LL Load Case(s)

| Jt | React Lbs | Uplft Lbs | Size In-Sx | Req'd In-Sx |
|---|---|---|---|---|
| A | 1187 | 170 | 8- 0 | 1- 8 |
| | | | Hz = | -340 |
| D | 1315 | 168 | 8- 0 | 1- 9 |
| | | | Hz = | 160 |

| Membr | CSI | P Lbs | Axl-CSI-Bnd | |
|---|---|---|---|---|
| ----------Top Chords---------- | | | | |
| B -L | 0.36 | 568 C | 0.00 | 0.36 |
| L -C | 0.36 | 568 C | 0.00 | 0.36 |
| C -M | 0.22 | 1516 C | 0.01 | 0.21 |
| M -N | 0.40 | 1530 C | 0.01 | 0.39 |
| N -O | 0.42 | 2418 C | 0.03 | 0.39 |
| O -P | 0.35 | 4659 C | 0.15 | 0.20 |
| P -D | 0.18 | 2254 C | 0.03 | 0.15 |
| --------Bottom Chords--------- | | | | |
| A -K | 0.52 | 268 T | 0.00 | 0.52 |
| K -H | 0.52 | 49 C | 0.00 | 0.52 |
| G -I | 0.48 | 2191 T | 0.36 | 0.12 |
| I -F | 0.89 | 3987 T | 0.66 | 0.23 |
| F -E | 0.97 | 2368 T | 0.31 | 0.66 |
| E -D | 0.45 | 1983 T | 0.33 | 0.12 |
| ----------Chord-Webs---------- | | | | |
| H -G | 0.10 | 154 T | 0.02 | 0.08 |
| G -M | 0.13 | 287 C | 0.02 | 0.11 |
| ----------Webs---------- | | | | |
| A -B | 0.35 | 1161 C | WindLd | 1 Br |
| B -K | 0.23 | 1179 T | | |
| K -L | 0.11 | 390 C | | 1 Br |
| K -C | 0.24 | 622 C | | 1 Br |
| K -G | 0.16 | 876 T | | |
| C -G | 0.20 | 1077 T | | |
| G -N | 0.57 | 940 C | | |
| I -N | 0.08 | 481 T | | |
| I -O | 0.54 | 1830 C | | |
| F -O | 0.23 | 1285 T | | |
| F -P | 0.40 | 2168 T | | |
| E -P | 0.12 | 1326 C | | |

TL Defl -0.63" in K -H L/540
LL Defl -0.29" in K -H L/999

| Hz Disp | LL | DL | TL |
|---|---|---|---|
| Jt D | 0.10" | 0.10" | 0.20" |

Shear // Grain in F -E 0.57

Plates for each ply each face.
PLATING CONFORMS TO TPI.
REPORT: NER 691
ROBBINS ENGINEERING, INC.
BASED ON SP LUMBER
USING GROSS AREA TEST.
Plate - LOCK 20 Ga, Gross Area
Plate - RHS 20 Ga, Gross Area

| Jt | Type | Plt Size | X | Y | JSI |
|---|---|---|---|---|---|
| B | LOCK | 4.0x 6.0 | Ctr | Ctr | 0.63 |
| L | LOCK | 2.0x 4.0 | Ctr | Ctr | 0.41 |
| C | LOCK | 5.0x 5.0 | Ctr | -0.2 | 0.91 |
| M | LOCK | 2.0x 4.0 | Ctr | Ctr | 0.24 |
| N | LOCK | 5.0x 7.0 | 0.2 | 0.5 | 0.67 |
| O | LOCK | 3.0x 7.0 | Ctr | Ctr | 0.56 |
| P | LOCK | 3.0x 7.0 | Ctr | Ctr | 0.64 |
| D | LOCK | 4.0x 6.0 | Ctr | 0.1 | 0.64 |
| A | LOCK | 2.0x 4.0 | Ctr | Ctr | 0.42 |
| K | LOCK | 4.0x10.0 | Ctr | Ctr | 0.64 |
| H | LOCK | 2.0x 4.0 | Ctr | Ctr | 0.58 |
| G | LOCK | 5.0x 9.0 | Ctr | 0.8 | 0.59 |
| I | LOCK | 3.0x 7.0 | Ctr | Ctr | 0.82 |
| F | LOCK | 5.0x 7.0 | Ctr | -1.0 | 0.77 |
| E | LOCK | 5.0x 5.0 | 1.4 | 3.3 | 0.85 |

REVIEWED BY:
Robbins Engineering, Inc.

PO Box 280055
Tampa, FL 33682

REFER TO ROBBINS ENG. GENERAL NOTES AND SYMBOLS SHEET FOR ADDITIONAL SPECIFICATIONS.

NOTES:
Trusses Manufactured by:
Mayo Truss Co. Inc.
Analysis Conforms To:
FBC2004
OH Loading
Soffit psf 2.0
Provide connection to bearing for 340 Lbs Horiz Reaction
Design checked for 10 psf non-concurrent LL on BC.
Wind Loads - ANSI / ASCE 7-02
Truss is designed as a Main Wind-Force Resistance System.
Wind Speed: 110 mph
Mean Roof Height: 15-0
Exposure Category: B
Occupancy Factor : 1.00
Building Type: Enclosed
Zone location: Exterior
TC Dead Load : 5.0 psf
BC Dead Load : 5.0 psf
Max comp. force 4659 Lbs
Quality Control Factor 1.25

Truss Design Engineer: Thomas A. Albani
License #: 39380
Address: P.O. Box 280055, Tampa, FL 33682

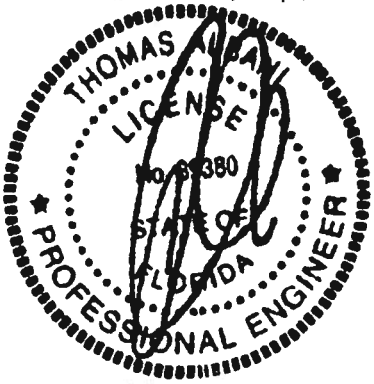


Date Sealed: 8/28/2006

| Job | Mark | Quan | Type | Span | Pl-Hl | Left OH | Right OH | Engineering |
|---|---|---|---|---|---|---|---|---|
| whitt-bohlmann | A12 | 1 | SP | 290800 | 6 | 0 | 2- 0- 0 | T06082951 |

U# J#whitt-bohlmann BOHLMANN

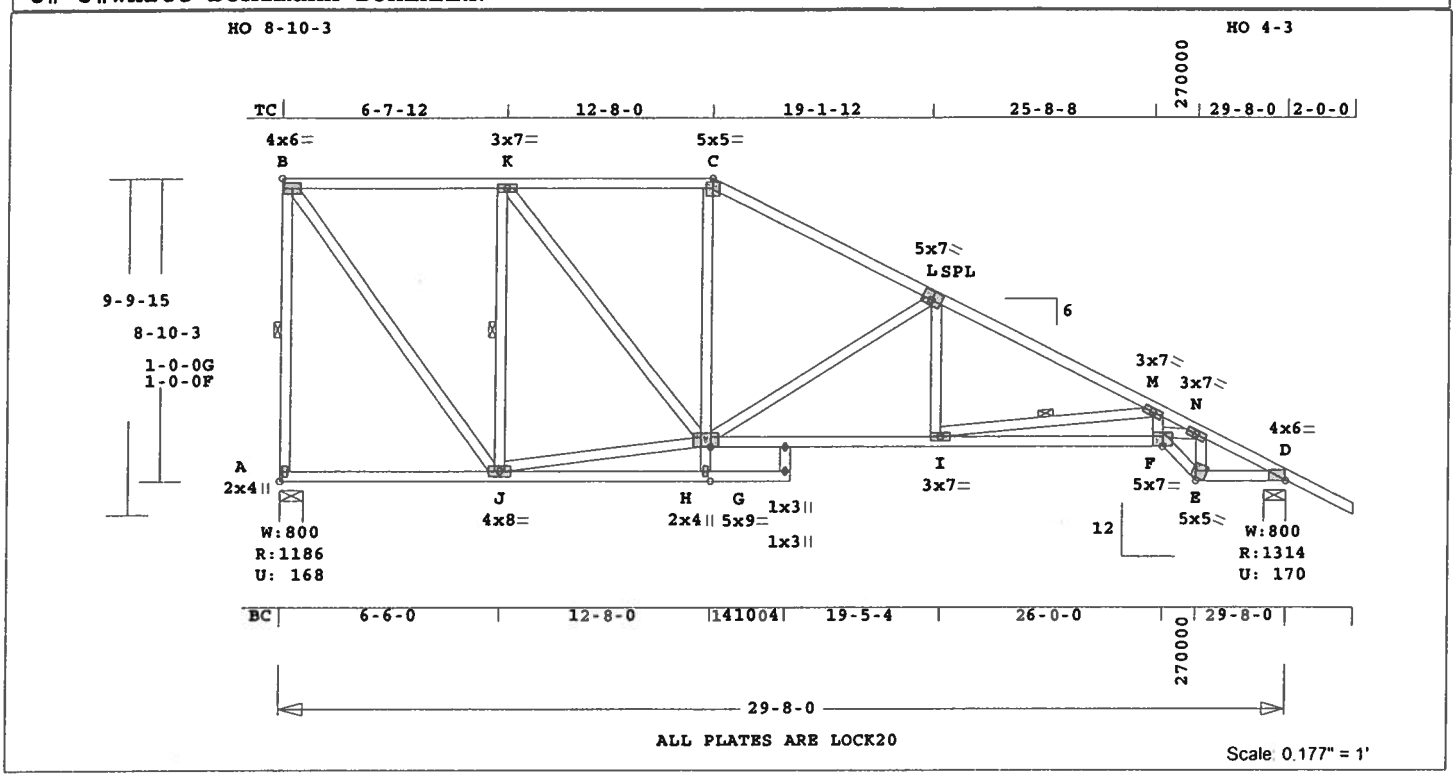


Robbins Engineering, Inc./Online Plus™ APPROX. TRUSS WEIGHT: 261.2 LBS
Tampa, FL 33682

Online Plus -- Version 19.0.034
RUN DATE: 26-AUG-06

| | CSI | -Size- | ----Lumber---- |
|---|---|---|---|
| TC | 0.58 | 2x 4 | SP-#2 |
| BC | 0.89 | 2x 4 | SP-#2 |
| EX F -E | | 2x 4 | SP-#1 |
| CW | 0.14 | 2x 4 | SP-#2 |
| WB | 0.74 | 2x 4 | SP-#2 |

Brace truss as follows:

| O.C. | From | To |
|---|---|---|
| TC Cont. | 0- 0- 0 | 29- 8- 0 |
| BC Cont. | 0- 0- 0 | 29- 8- 0 |

WB 1 rows CLB on A -B
WB 1 rows CLB on J -K
WB 1 rows CLB on I -M
Attach CLB with (2)-10d nails at each web.

| Loading | Live | Dead | (psf) |
|---|---|---|---|
| TC | 20.0 | 10.0 | |
| BC | 0.0 | 10.0 | |
| Total | 20.0 | 20.0 | 40.0 |
| Spacing | | | 24.0" |

Lumber Duration Factor 1.25
Plate Duration Factor 1.25
TC Fb=1.15 Fc=1.10 Ft=1.10
BC Fb=1.10 Fc=1.10 Ft=1.10

Plus 6 Wind Load Case(s)
Plus 1 UBC LL Load Case(s)

| Jt | React Lbs | Uplft Lbs | Size In-Sx | Req'd In-Sx |
|---|---|---|---|---|
| A | 1187 | 168 | 8- 0 | 1- 8 |
| | | | Hz = | -304 |
| D | 1315 | 171 | 8- 0 | 1- 9 |
| | | | Hz = | 143 |

| Membr | CSI | P Lbs | Axl-CSI-Bnd | |
|---|---|---|---|---|
| ----------Top Chords---------- | | | | |
| B -K | 0.46 | 724 C | 0.00 | 0.46 |
| K -C | 0.46 | 1128 C | 0.00 | 0.46 |
| C -L | 0.53 | 1278 C | 0.01 | 0.52 |
| L -M | 0.58 | 2141 C | 0.09 | 0.49 |
| M -N | 0.26 | 4721 C | 0.16 | 0.10 |
| N -D | 0.18 | 2254 C | 0.03 | 0.15 |
| --------Bottom Chords--------- | | | | |
| A -J | 0.29 | 239 T | 0.00 | 0.29 |
| J -H | 0.29 | 79 C | 0.00 | 0.29 |
| G -I | 0.44 | 1934 T | 0.20 | 0.24 |
| I -F | 0.89 | 4078 T | 0.68 | 0.21 |
| F -E | 1.00 | 2346 T | 0.31 | 0.69 |
| E -D | 0.46 | 1982 T | 0.33 | 0.13 |
| ----------Chord-Webs---------- | | | | |
| H -G | 0.14 | 89 T | 0.01 | 0.13 |
| G -C | 0.10 | 314 T | 0.04 | 0.06 |
| ----------Webs---------- | | | | |
| A -B | 0.28 | 1134 C | WindLd | 1 Br |
| B -J | 0.24 | 1214 T | | |
| J -K | 0.23 | 946 C | | 1 Br |
| J -G | 0.14 | 758 T | | |
| K -G | 0.11 | 649 T | | |
| G -L | 0.74 | 945 C | | |
| I -L | 0.08 | 506 T | | |
| I -M | 0.35 | 2166 C | | 1 Br |
| F -M | 0.23 | 1253 T | | |
| F -N | 0.41 | 2258 T | | |
| E -N | 0.12 | 1293 C | | |

TL Defl -0.38" in I -F L/904
LL Defl -0.18" in F -E L/999

| Hz Disp | LL | DL | TL |
|---|---|---|---|
| Jt D | 0.11" | 0.11" | 0.22" |

Shear // Grain in F -E 0.60

Plates for each ply each face.
PLATING CONFORMS TO TPI.
REPORT: NER 691
ROBBINS ENGINEERING, INC.
BASED ON SP LUMBER
USING GROSS AREA TEST.
Plate - LOCK 20 Ga, Gross Area
Plate - RHS 20 Ga, Gross Area

| Jt | Type | Plt Size | X | Y | JSI |
|---|---|---|---|---|---|
| B | LOCK | 4.0x 6.0 | Ctr | Ctr | 0.63 |
| K | LOCK | 3.0x 7.0 | Ctr | Ctr | 0.45 |
| C | LOCK | 5.0x 5.0 | Ctr | -0.2 | 0.91 |
| L | LOCK | 5.0x 7.0 | 0.2 | 0.5 | 0.67 |
| M | LOCK | 3.0x 7.0 | Ctr | Ctr | 0.63 |
| N | LOCK | 3.0x 7.0 | Ctr | Ctr | 0.67 |
| D | LOCK | 4.0x 6.0 | Ctr | 0.1 | 0.64 |
| A | LOCK | 2.0x 4.0 | Ctr | Ctr | 0.42 |
| J | LOCK | 4.0x 8.0 | Ctr | Ctr | 0.61 |
| H | LOCK | 2.0x 4.0 | Ctr | Ctr | 0.58 |
| G | LOCK | 5.0x 9.0 | Ctr | 0.8 | 0.59 |
| I | LOCK | 3.0x 7.0 | Ctr | Ctr | 0.81 |
| F | LOCK | 5.0x 7.0 | Ctr | -1.0 | 0.77 |
| E | LOCK | 5.0x 5.0 | 1.4 | 3.3 | 0.84 |

REVIEWED BY:
Robbins Engineering, Inc.
PO Box 280055

REFER TO ROBBINS ENG. GENERAL NOTES AND SYMBOLS SHEET FOR ADDITIONAL SPECIFICATIONS.

NOTES:
Trusses Manufactured by:
Mayo Truss Co. Inc.
Analysis Conforms To:
FBC2004
OH Loading
Soffit psf 2.0
Provide connection to bearing for 304 Lbs Horiz Reaction
Design checked for 10 psf non-concurrent LL on BC.
Wind Loads - ANSI / ASCE 7-02
Truss is designed as a Main Wind-Force Resistance System.
Wind Speed: 110 mph
Mean Roof Height: 15-0
Exposure Category: B
Occupancy Factor : 1.00
Building Type: Enclosed
Zone location: Exterior
TC Dead Load : 5.0 psf
BC Dead Load : 5.0 psf
Max comp. force 4721 Lbs
Quality Control Factor 1.25

Truss Design Engineer: Thomas A. Albani
License #: 39380
Address: P.O. Box 280055, Tampa, FL 33682

Date Sealed: 8/28/2006

| Job | Mark | Quan | Type | Span | P1-H1 | Left OH | Right OH | Engineering |
|---|---|---|---|---|---|---|---|---|
| whitt-bohlmann | A14 | 1 | SP | 290800 | 6 | 0 | 2- 0- 0 | T06082951 |

U# J#whitt-bohlmann BOHLMANN

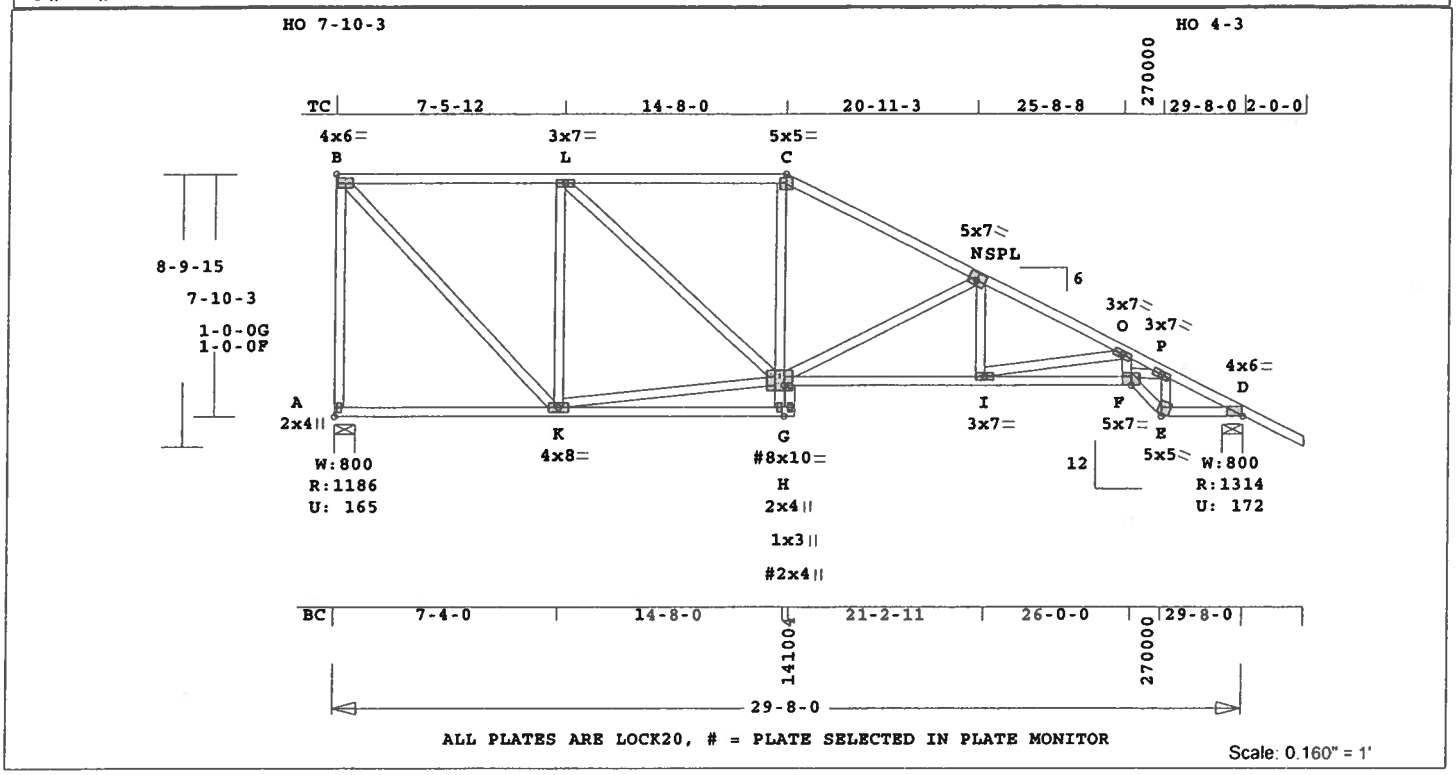


Robbins Engineering, Inc./Online Plus™ APPROX. TRUSS WEIGHT: 247.0 LBS

Online Plus -- Version 19.0.034
RUN DATE: 26-AUG-06

| | CSI | -Size- | ----Lumber---- |
|---|---|---|---|
| TC | 0.64 | 2x 4 | SP-#2 |
| BC | 0.89 | 2x 4 | SP-#2 |
| EX F -E | | 2x 4 | SP-#1 |
| CW | 0.13 | 2x 4 | SP-#2 |
| WB | 0.80 | 2x 4 | SP-#2 |

Brace truss as follows:

| O.C. | From | To |
|---|---|---|
| TC Cont. | 0- 0- 0 | 29- 8- 0 |
| BC Cont. | 0- 0- 0 | 29- 8- 0 |

| Loading | Live | Dead | (psf) |
|---|---|---|---|
| TC | 20.0 | 10.0 | |
| BC | 0.0 | 10.0 | |
| Total | 20.0 | 20.0 | 40.0 |
| Spacing | | | 24.0" |

Lumber Duration Factor 1.25
Plate Duration Factor 1.25
TC Fb=1.15 Fc=1.10 Ft=1.10
BC Fb=1.10 Fc=1.10 Ft=1.10

Plus 6 Wind Load Case(s)
Plus 1 UBC LL Load Case(s)

| Jt | React Lbs | Uplft Lbs | Size In-Sx | Req'd In-Sx |
|---|---|---|---|---|
| A | 1187 | 166 | 8- 0 | 1- 8 |
| | | | Hz = | -268 |
| D | 1314 | 173 | 8- 0 | 1- 9 |
| | | | Hz = | 126 |

| Membr | CSI | P Lbs | Axl-CSI-Bnd |
|---|---|---|---|
| ----------Top Chords---------- | | | |
| B -L | 0.63 | 906 C | 0.00 0.63 |
| L -C | 0.64 | 1335 C | 0.01 0.63 |
| C -N | 0.39 | 1504 C | 0.01 0.38 |
| N -O | 0.41 | 2418 C | 0.03 0.38 |
| O -P | 0.35 | 4661 C | 0.15 0.20 |
| P -D | 0.18 | 2254 C | 0.03 0.15 |
| --------Bottom Chords--------- | | | |
| A -K | 0.39 | 211 T | 0.00 0.39 |
| K -H | 0.39 | 74 C | 0.00 0.39 |
| G -I | 0.48 | 2191 T | 0.36 0.12 |
| I -F | 0.89 | 3990 T | 0.66 0.23 |
| F -E | 0.97 | 2369 T | 0.31 0.66 |
| E -D | 0.45 | 1984 T | 0.33 0.12 |
| ----------Chord-Webs---------- | | | |
| H -G | 0.13 | 108 T | 0.01 0.12 |
| G -C | 0.12 | 377 T | 0.05 0.07 |
| ----------Webs---------- | | | |
| A -B | 0.80 | 1128 C | WindLd |
| B -K | 0.24 | 1315 T | |
| K -L | 0.64 | 903 C | |
| K -G | 0.17 | 932 T | |
| L -G | 0.10 | 580 T | |
| G -N | 0.63 | 953 C | |
| I -N | 0.08 | 489 T | |
| I -O | 0.54 | 1833 C | |
| F -O | 0.23 | 1284 T | |
| F -P | 0.40 | 2170 T | |
| E -P | 0.12 | 1326 C | |

TL Defl -0.37" in G -I L/907
LL Defl -0.17" in G -I L/999

| Hz Disp | LL | DL | TL |
|---|---|---|---|
| Jt D | 0.10" | 0.10" | 0.20" |

Shear // Grain in F -E 0.57

Plates for each ply each face.
PLATING CONFORMS TO TPI.
REPORT: NER 691
ROBBINS ENGINEERING, INC.
BASED ON SP LUMBER
USING GROSS AREA TEST.
Plate - LOCK 20 Ga, Gross Area
Plate - RHS 20 Ga, Gross Area

| Jt | Type | Plt Size | X | Y | JSI |
|---|---|---|---|---|---|
| B | LOCK | 4.0x 6.0 | Ctr | Ctr | 0.63 |
| L | LOCK | 3.0x 7.0 | Ctr | Ctr | 0.43 |
| C | LOCK | 5.0x 5.0 | Ctr | -0.2 | 0.91 |
| N | LOCK | 5.0x 7.0 | 0.2 | 0.5 | 0.67 |
| O | LOCK | 3.0x 7.0 | Ctr | Ctr | 0.56 |
| P | LOCK | 3.0x 7.0 | Ctr | Ctr | 0.65 |
| D | LOCK | 4.0x 6.0 | Ctr | 0.1 | 0.64 |
| A | LOCK | 2.0x 4.0 | Ctr | Ctr | 0.42 |
| K | LOCK | 4.0x 8.0 | Ctr | Ctr | 0.61 |
| H | LOCK | 2.0x 4.0 | Ctr | Ctr | 0.58 |
| G# | LOCK | 8.0x10.0 | Ctr | 0.1 | 0.59 |
| I | LOCK | 3.0x 7.0 | Ctr | Ctr | 0.82 |
| F | LOCK | 5.0x 7.0 | Ctr | -1.0 | 0.77 |
| E | LOCK | 5.0x 5.0 | 1.4 | 3.3 | 0.85 |

# = Plate Monitor used

REVIEWED BY:
Robbins Engineering, Inc.
PO Box 280055
Tampa, FL 33682

REFER TO ROBBINS ENG. GENERAL NOTES AND SYMBOLS SHEET FOR ADDITIONAL SPECIFICATIONS.

NOTES:
Trusses Manufactured by:
Mayo Truss Co. Inc.
Analysis Conforms To:
FBC2004
OH Loading
Soffit psf 2.0
Design checked for 10 psf non-concurrent LL on BC.
NOTE: USER MODIFIED PLATES
This design may have plates selected through a plate monitor.
Wind Loads - ANSI / ASCE 7-02
Truss is designed as a Main Wind-Force Resistance System.
Wind Speed: 110 mph
Mean Roof Height: 15-0
Exposure Category: B
Occupancy Factor : 1.00
Building Type: Enclosed
Zone location: Exterior
TC Dead Load : 5.0 psf
BC Dead Load : 5.0 psf
Max comp. force 4661 Lbs
Quality Control Factor 1.25

Truss Design Engineer: Thomas A. Albani
License #: 39380
Address: P.O. Box 280055, Tampa, FL 33682

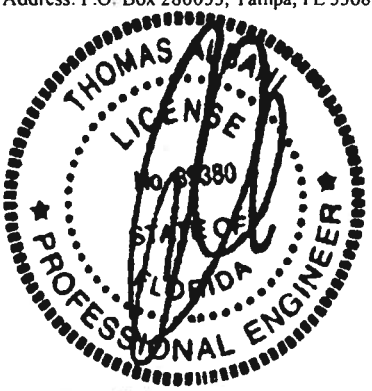


Date Sealed: 8/28/2006

| Job | Mark | Quan | Type | Span | P1-H1 | Left OH | Right OH | Engineering |
|---|---|---|---|---|---|---|---|---|
| whitt-bohlmann | A16 | 1 | SP | 290800 | 6 | 0 | 2- 0- 0 | T06082951 |

U# J#whitt-bohlmann BOHLMANN

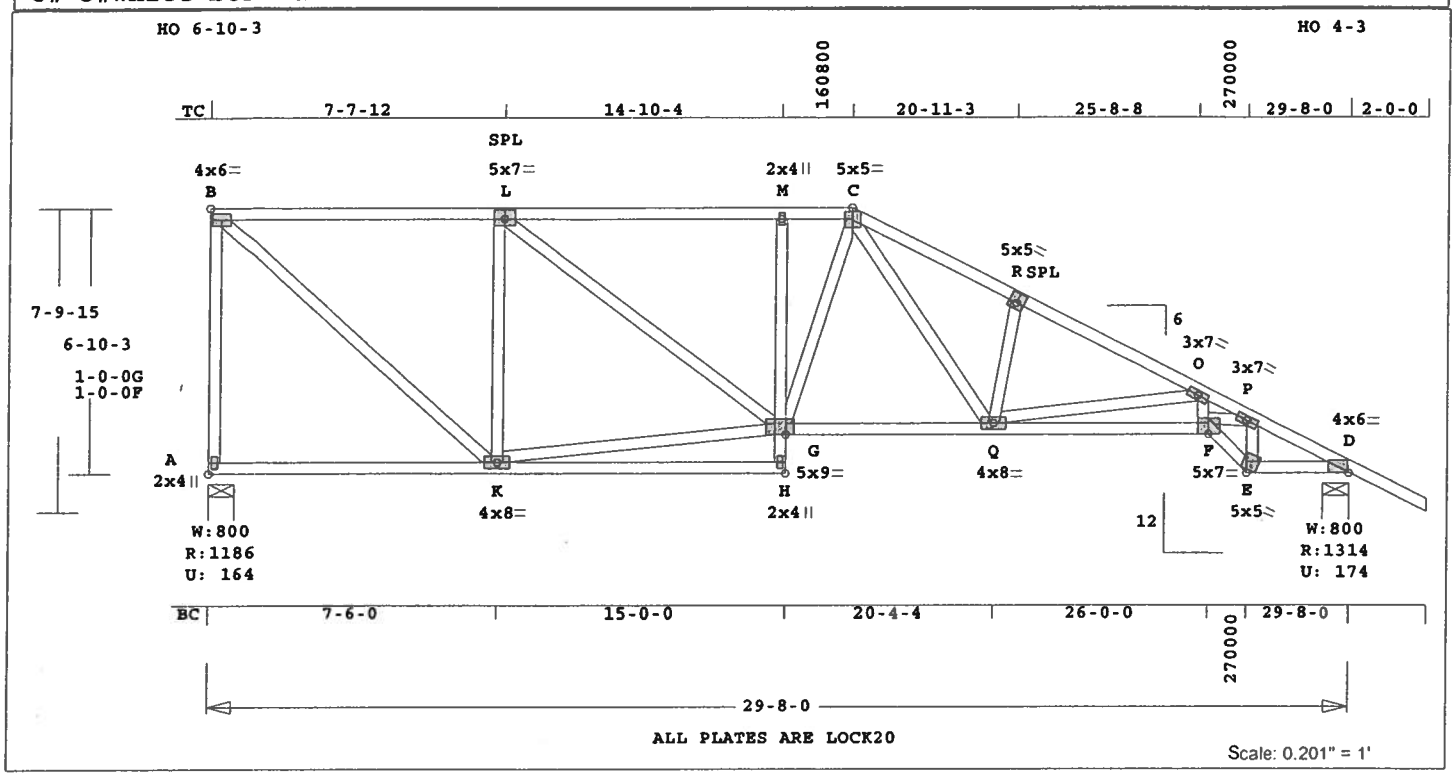


Robbins Engineering, Inc./Online Plus™ APPROX. TRUSS WEIGHT: 247.9 LBS

Online Plus -- Version 19.0.034
RUN DATE: 26-AUG-06

| | CSI | -Size- | ----Lumber---- |
|---|---|---|---|
| TC | 0.65 | 2x 4 | SP-#2 |
| BC | 0.89 | 2x 4 | SP-#2 |
| EX F -E | | 2x 4 | SP-#1 |
| CW | 0.10 | 2x 4 | SP-#2 |
| WB | 0.75 | 2x 4 | SP-#2 |

Brace truss as follows:

| O.C. | From | To |
|---|---|---|
| TC Cont. | 0- 0- 0 | 29- 8- 0 |
| BC Cont. | 0- 0- 0 | 29- 8- 0 |

| Loading | Live | Dead | (psf) |
|---|---|---|---|
| TC | 20.0 | 10.0 | |
| BC | 0.0 | 10.0 | |
| Total | 20.0 | 20.0 | 40.0 |
| Spacing | | | 24.0" |

Lumber Duration Factor 1.25
Plate Duration Factor 1.25
TC Fb=1.15 Fc=1.10 Ft=1.10
BC Fb=1.10 Fc=1.10 Ft=1.10

Plus 6 Wind Load Case(s)
Plus 1 UBC LL Load Case(s)

| Jt | React Lbs | Uplft Lbs | Size In-Sx | Req'd In-Sx |
|---|---|---|---|---|
| A | 1187 | 164 | 8- 0 | 1- 8 |
| | | | Hz = | -231 |
| D | 1315 | 175 | 8- 0 | 1- 9 |
| | | | Hz = | 109 |

| Membr | CSI | P Lbs | Axl-CSI-Bnd |
|---|---|---|---|
| ----------Top Chords---------- | | | |
| B -L | 0.64 | 1061 C | 0.00 0.64 |
| L -M | 0.65 | 1579 C | 0.01 0.64 |
| M -C | 0.32 | 1586 C | 0.01 0.31 |
| C -R | 0.31 | 2257 C | 0.03 0.28 |
| R -O | 0.42 | 2298 C | 0.05 0.37 |
| O -P | 0.34 | 4666 C | 0.15 0.19 |
| P -D | 0.18 | 2254 C | 0.03 0.15 |
| --------Bottom Chords--------- | | | |
| A -K | 0.41 | 182 T | 0.00 0.41 |
| K -H | 0.41 | 23 T | 0.00 0.41 |
| G -Q | 0.34 | 1515 T | 0.25 0.09 |
| Q -F | 0.89 | 3998 T | 0.67 0.22 |
| F -E | 0.98 | 2365 T | 0.31 0.67 |
| E -D | 0.45 | 1985 T | 0.33 0.12 |
| ----------Chord-Webs---------- | | | |
| H -G | 0.05 | 111 T | 0.01 0.04 |
| G -M | 0.10 | 348 C | 0.01 0.09 |
| ----------Webs---------- | | | |
| A -B | 0.60 | 1127 C | WindLd |
| B -K | 0.26 | 1421 T | |
| K -L | 0.48 | 905 C | |
| K -G | 0.19 | 1047 T | |
| L -G | 0.11 | 649 T | |
| G -C | 0.04 | 218 T | |
| C -Q | 0.16 | 885 T | |
| Q -R | 0.05 | 325 C | |
| Q -O | 0.75 | 1948 C | |
| F -O | 0.23 | 1282 T | |
| F -P | 0.40 | 2178 T | |
| E -P | 0.12 | 1320 C | |

TL Defl -0.36" in G -Q L/934
LL Defl -0.18" in G -Q L/999

| Hz Disp | LL | DL | TL |
|---|---|---|---|
| Jt D | 0.10" | 0.10" | 0.20" |

Shear // Grain in F -E 0.58

Plates for each ply each face.
PLATING CONFORMS TO TPI.
REPORT: NER 691
ROBBINS ENGINEERING, INC.
BASED ON SP LUMBER
USING GROSS AREA TEST.
Plate - LOCK 20 Ga, Gross Area
Plate - RHS 20 Ga, Gross Area

| Jt | Type | Plt Size | X | Y | JSI |
|---|---|---|---|---|---|
| B | LOCK | 4.0x 6.0 | Ctr | Ctr | 0.63 |
| L | LOCK | 5.0x 7.0 | Ctr | 0.5 | 0.68 |
| M | LOCK | 2.0x 4.0 | Ctr | Ctr | 0.40 |
| C | LOCK | 5.0x 5.0 | Ctr | -0.2 | 0.91 |
| R | LOCK | 5.0x 5.0 | 0.2 | 0.5 | 0.67 |
| O | LOCK | 3.0x 7.0 | Ctr | Ctr | 0.58 |
| P | LOCK | 3.0x 7.0 | Ctr | Ctr | 0.65 |
| D | LOCK | 4.0x 6.0 | Ctr | 0.1 | 0.64 |
| A | LOCK | 2.0x 4.0 | Ctr | Ctr | 0.42 |
| K | LOCK | 4.0x 8.0 | Ctr | Ctr | 0.61 |
| H | LOCK | 2.0x 4.0 | Ctr | Ctr | 0.58 |
| G | LOCK | 5.0x 9.0 | Ctr | 0.8 | 0.70 |
| Q | LOCK | 4.0x 8.0 | Ctr | Ctr | 0.83 |
| F | LOCK | 5.0x 7.0 | Ctr | -1.0 | 0.77 |
| E | LOCK | 5.0x 5.0 | 1.4 | 3.3 | 0.85 |

REVIEWED BY:
Robbins Engineering, Inc.
PO Box 280055
Tampa, FL 33682

REFER TO ROBBINS ENG. GENERAL NOTES AND SYMBOLS SHEET FOR ADDITIONAL SPECIFICATIONS.

NOTES:
Trusses Manufactured by:
Mayo Truss Co. Inc.
Analysis Conforms To:
FBC2004
OH Loading
Soffit psf 2.0
Design checked for 10 psf non-concurrent LL on BC.
Wind Loads - ANSI / ASCE 7-02
Truss is designed as a Main Wind-Force Resistance System.
Wind Speed: 110 mph
Mean Roof Height: 15-0
Exposure Category: B
Occupancy Factor : 1.00
Building Type: Enclosed
Zone location: Exterior
TC Dead Load : 5.0 psf
BC Dead Load : 5.0 psf
Max comp. force 4666 Lbs
Quality Control Factor 1.25

Truss Design Engineer: Thomas A. Albani
License #: 39380
Address: P.O. Box 280055, Tampa, FL 33682

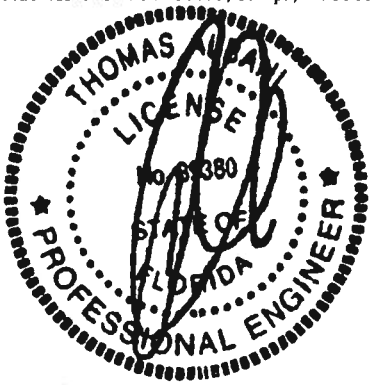


Date Sealed: 8/28/2006

| Job | Mark | Quan | Type | Span | P1-H1 | Left OH | Right OH | Engineering |
|---|---|---|---|---|---|---|---|---|
| whitt-bohlmann | A18 | 1 | SP | 290800 | 6 | 0 | 2- 0- 0 | T06082951 |

U# J#whitt-bohlmann BOHLMANN

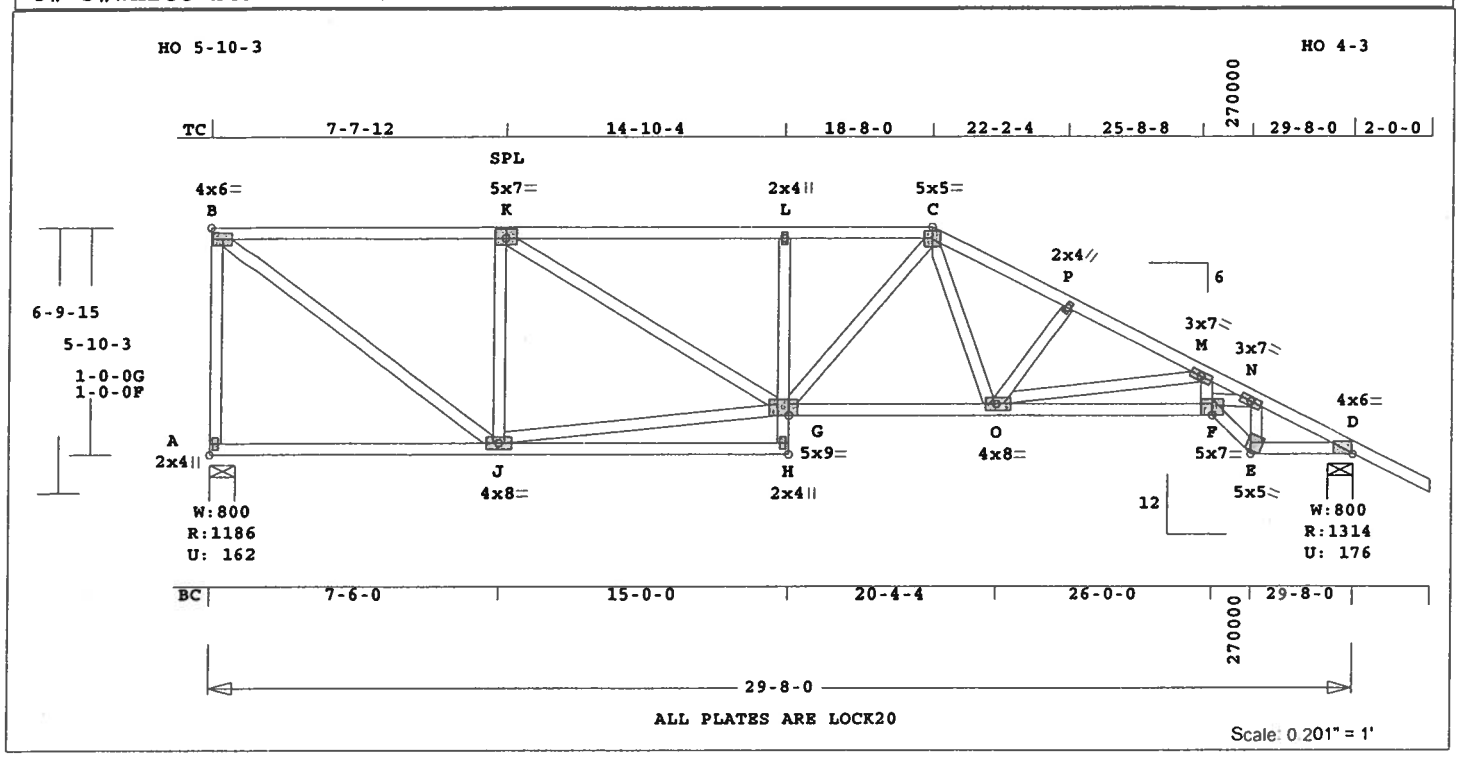


Robbins Engineering, Inc./Online Plus™ APPROX. TRUSS WEIGHT: 236.2 LBS

Online Plus -- Version 19.0.034
RUN DATE: 26-AUG-06

| | CSI | -Size- | ----Lumber---- |
|---|---|---|---|
| TC | 0.66 | 2x 4 | SP-#2 |
| EX C -D | | 2x 4 | SP-#1 |
| BC | 0.86 | 2x 4 | SP-#2 |
| EX F -E | | 2x 4 | SP-#1 |
| CW | 0.12 | 2x 4 | SP-#2 |
| WB | 0.66 | 2x 4 | SP-#2 |

Brace truss as follows:

| O.C. | From | To |
|---|---|---|
| TC Cont. | 0- 0- 0 | 29- 8- 0 |
| BC Cont. | 0- 0- 0 | 29- 8- 0 |

| Loading | Live | Dead | (psf) |
|---|---|---|---|
| TC | 20.0 | 10.0 | |
| BC | 0.0 | 10.0 | |
| Total | 20.0 | 20.0 | 40.0 |
| Spacing | | | 24.0" |

Lumber Duration Factor 1.25
Plate Duration Factor 1.25
TC Fb=1.15 Fc=1.10 Ft=1.10
BC Fb=1.10 Fc=1.10 Ft=1.10

Plus 6 Wind Load Case(s)
Plus 1 UBC LL Load Case(s)

| Jt | React Lbs | Uplft Lbs | Size Req'd In-Sx | In-Sx |
|---|---|---|---|---|
| A | 1187 | 163 | 8- 0 | 1- 8 |
| | | | Hz = | -195 |
| D | 1315 | 176 | 8- 0 | 1- 9 |
| | | | Hz = | 92 |

| Membr | CSI | P Lbs | Axl-CSI-Bnd | |
|---|---|---|---|---|
| ----------Top Chords---------- | | | | |
| B -K | 0.65 | 1251 C | 0.01 | 0.64 |
| K -L | 0.66 | 1918 C | 0.02 | 0.64 |
| L -C | 0.32 | 1929 C | 0.02 | 0.30 |
| C -P | 0.21 | 2226 C | 0.02 | 0.19 |
| P -M | 0.37 | 2380 C | 0.04 | 0.33 |
| M -N | 0.41 | 4579 C | 0.11 | 0.30 |
| N -D | 0.14 | 2256 C | 0.02 | 0.12 |
| --------Bottom Chords--------- | | | | |
| A -J | 0.41 | 154 T | 0.00 | 0.41 |
| J -H | 0.41 | 49 T | 0.00 | 0.41 |
| G -O | 0.39 | 1756 T | 0.29 | 0.10 |
| O -F | 0.86 | 3883 T | 0.65 | 0.21 |
| F -E | 0.95 | 2380 T | 0.31 | 0.64 |
| E -D | 0.45 | 1987 T | 0.33 | 0.12 |
| ----------Chord-Webs---------- | | | | |
| H -G | 0.11 | 111 T | 0.01 | 0.10 |
| G -L | 0.12 | 341 C | 0.01 | 0.11 |
| ----------Webs---------- | | | | |
| A -B | 0.43 | 1127 C | WindLd | |
| B -J | 0.28 | 1569 T | | |
| J -K | 0.35 | 928 C | | |
| J -G | 0.22 | 1213 T | | |
| K -G | 0.14 | 784 T | | |
| G -C | 0.04 | 260 T | | |
| C -O | 0.12 | 671 T | | |
| O -P | 0.05 | 311 C | | |
| O -M | 0.66 | 1739 C | | |
| F -M | 0.24 | 1309 T | | |
| F -N | 0.38 | 2064 T | | |
| E -N | 0.12 | 1341 C | | |

| | | | |
|---|---|---|---|
| TL Defl | -0.37" in G -O | | L/921 |
| LL Defl | -0.18" in G -O | | L/999 |
| Hz Disp | LL | DL | TL |
| Jt D | 0.10" | 0.10" | 0.20" |

Shear // Grain in F -E 0.56

Plates for each ply each face.
PLATING CONFORMS TO TPI.
REPORT: NER 691
ROBBINS ENGINEERING, INC.
BASED ON SP LUMBER
USING GROSS AREA TEST.
Plate - LOCK 20 Ga, Gross Area
Plate - RHS 20 Ga, Gross Area

| Jt | Type | Plt Size | X | Y | JSI |
|---|---|---|---|---|---|
| B | LOCK | 4.0x 6.0 | Ctr | Ctr | 0.63 |
| K | LOCK | 5.0x 7.0 | Ctr | 0.5 | 0.68 |
| L | LOCK | 2.0x 4.0 | Ctr | Ctr | 0.40 |
| C | LOCK | 5.0x 5.0 | Ctr | -0.2 | 0.91 |
| P | LOCK | 2.0x 4.0 | Ctr | Ctr | 0.41 |
| M | LOCK | 3.0x 7.0 | Ctr | Ctr | 0.57 |
| N | LOCK | 3.0x 7.0 | Ctr | Ctr | 0.61 |
| D | LOCK | 4.0x 6.0 | Ctr | 0.1 | 0.64 |
| A | LOCK | 2.0x 4.0 | Ctr | Ctr | 0.42 |
| J | LOCK | 4.0x 8.0 | Ctr | Ctr | 0.64 |
| H | LOCK | 2.0x 4.0 | Ctr | Ctr | 0.58 |
| G | LOCK | 5.0x 9.0 | Ctr | 0.8 | 0.59 |
| O | LOCK | 4.0x 8.0 | 0.5 | Ctr | 0.98 |
| F | LOCK | 5.0x 7.0 | Ctr | -1.0 | 0.77 |
| E | LOCK | 5.0x 5.0 | 1.4 | 3.3 | 0.85 |

REVIEWED BY:
Robbins Engineering, Inc.

PO Box 280055
Tampa, FL 33682

REFER TO ROBBINS ENG. GENERAL NOTES AND SYMBOLS SHEET FOR ADDITIONAL SPECIFICATIONS.

NOTES:
Trusses Manufactured by:
Mayo Truss Co. Inc.
Analysis Conforms To:
FBC2004
OH Loading
Soffit psf 2.0
Design checked for 10 psf non-concurrent LL on BC.
Wind Loads - ANSI / ASCE 7-02
Truss is designed as a Main Wind-Force Resistance System.
Wind Speed: 110 mph
Mean Roof Height: 15-0
Exposure Category: B
Occupancy Factor : 1.00
Building Type: Enclosed
Zone location: Exterior
TC Dead Load : 5.0 psf
BC Dead Load : 5.0 psf
Max comp. force 4579 Lbs
Quality Control Factor 1.25

Truss Design Engineer: Thomas A. Albani
License #: 39380
Address: P.O. Box 280055, Tampa, FL 33682

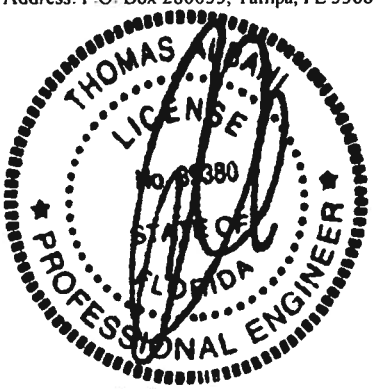


Date Sealed: 8/28/2006

| Job | Mark | Quan | Type | Span | P1-H1 | Left OH | Right OH | Engineering |
|---|---|---|---|---|---|---|---|---|
| whitt-bohlmann | A20 | 1 | SP | 290800 | 6 | 0 | 2- 0- 0 | T06082951 |

U# J#whitt-bohlmann BOHLMANN

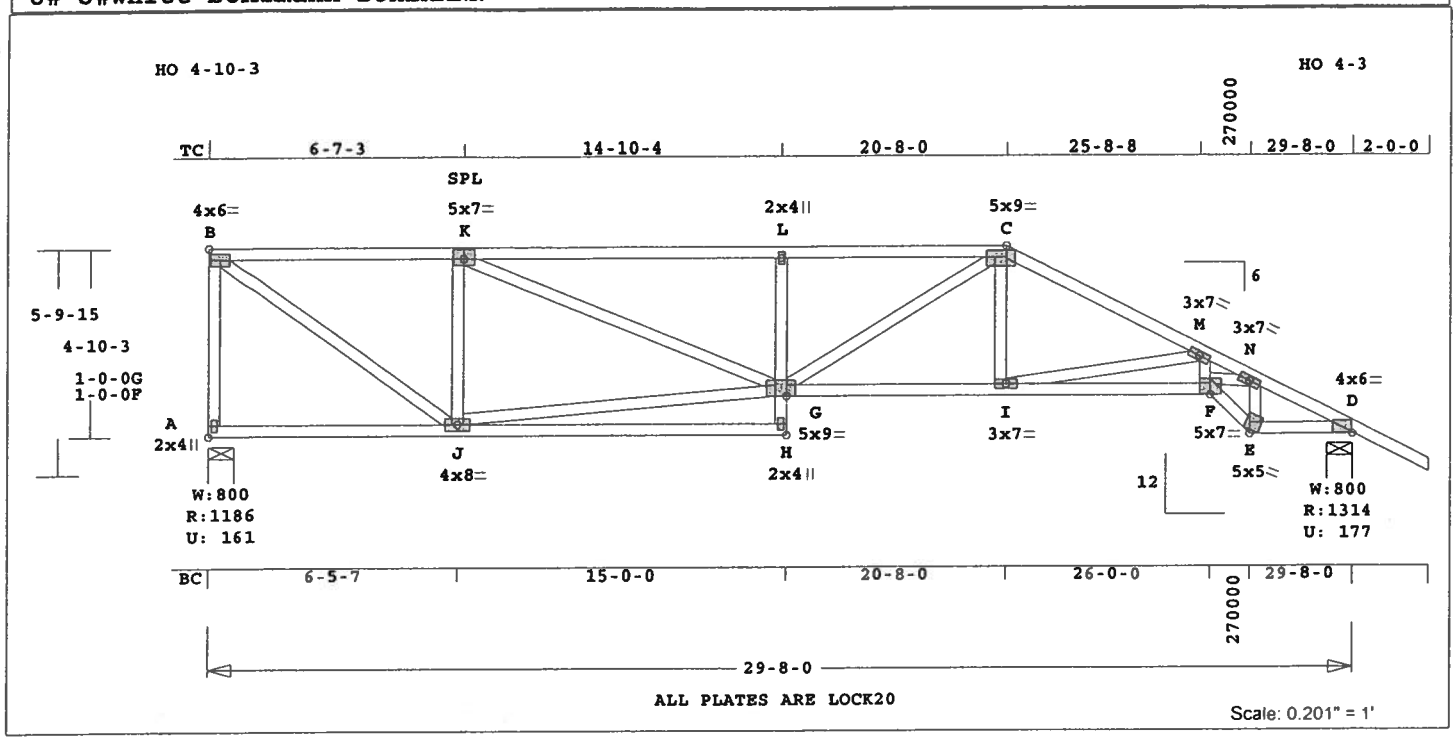


Robbins Engineering, Inc./Online Plus™ APPROX. TRUSS WEIGHT: 222.9 LBS

Online Plus -- Version 19.0.034
RUN DATE: 26-AUG-06

| | CSI | -Size- | ----Lumber---- |
|---|---|---|---|
| TC | 0.70 | 2x 4 | SP-#2 |
| BC | 0.89 | 2x 4 | SP-#2 |
| EX F -E | | 2x 4 | SP-#1 |
| CW | 0.19 | 2x 4 | SP-#2 |
| WB | 0.71 | 2x 4 | SP-#2 |

Brace truss as follows:

| | O.C. | From | To |
|---|---|---|---|
| TC Cont. | | 0- 0- 0 | 29- 8- 0 |
| BC Cont. | | 0- 0- 0 | 29- 8- 0 |

| Loading | Live | Dead | (psf) |
|---|---|---|---|
| TC | 20.0 | 10.0 | |
| BC | 0.0 | 10.0 | |
| Total | 20.0 | 20.0 | 40.0 |
| Spacing | | | 24.0" |

Lumber Duration Factor 1.25
Plate Duration Factor 1.25
TC Fb=1.15 Fc=1.10 Ft=1.10
BC Fb=1.10 Fc=1.10 Ft=1.10

Plus 6 Wind Load Case(s)
Plus 1 UBC LL Load Case(s)

| Jt | React Lbs | Uplft Lbs | Size In-Sx | Req'd In-Sx |
|---|---|---|---|---|
| A | 1187 | 161 | 8- 0 | 1- 8 |
| | | | Hz = | -159 |
| D | 1315 | 177 | 8- 0 | 1- 9 |
| | | | Hz = | 75 |

| Membr | CSI | P Lbs | Axl | CSI | Bnd |
|---|---|---|---|---|---|
| ----------Top Chords---------- | | | | | |
| B -K | 0.63 | 1381 | C | 0.01 | 0.62 |
| K -L | 0.70 | 2476 | C | 0.13 | 0.57 |
| L -C | 0.53 | 2499 | C | 0.04 | 0.49 |
| C -M | 0.44 | 2322 | C | 0.06 | 0.38 |
| M -N | 0.31 | 4680 | C | 0.15 | 0.16 |
| N -D | 0.18 | 2254 | C | 0.03 | 0.15 |
| --------Bottom Chords--------- | | | | | |
| A -J | 0.44 | 125 | T | 0.00 | 0.44 |
| J -H | 0.44 | 90 | T | 0.00 | 0.44 |
| G -I | 0.46 | 2081 | T | 0.34 | 0.12 |
| I -F | 0.89 | 4019 | T | 0.67 | 0.22 |
| F -E | 0.98 | 2361 | T | 0.31 | 0.67 |
| E -D | 0.45 | 1984 | T | 0.33 | 0.12 |
| ----------Chord-Webs---------- | | | | | |
| H -G | 0.19 | 134 | T | 0.01 | 0.18 |
| G -L | 0.18 | 448 | C | 0.00 | 0.18 |
| ----------Webs---------- | | | | | |
| A -B | 0.30 | 1141 | C | WindLd | |
| B -J | 0.31 | 1704 | T | | |
| J -K | 0.25 | 967 | C | | |
| J -G | 0.24 | 1300 | T | | |
| K -G | 0.21 | 1189 | T | | |
| G -C | 0.09 | 489 | T | | |
| I -C | 0.08 | 475 | T | | |
| I -M | 0.71 | 1953 | C | | |
| F -M | 0.23 | 1271 | T | | |
| F -N | 0.40 | 2199 | T | | |
| E -N | 0.12 | 1314 | C | | |

| | | | |
|---|---|---|---|
| TL Defl | -0.50" in J -H | L/680 | |
| LL Defl | -0.22" in G -I | L/999 | |
| Hz Disp | LL | DL | TL |
| Jt D | 0.11" | 0.11" | 0.22" |
| Shear // Grain | in F -E | | 0.58 |

Plates for each ply each face.
PLATING CONFORMS TO TPI.
REPORT: NER 691
ROBBINS ENGINEERING, INC.
BASED ON SP LUMBER
USING GROSS AREA TEST.
Plate - LOCK 20 Ga, Gross Area
Plate - RHS 20 Ga, Gross Area

| Jt | Type | Plt Size | X | Y | JSI |
|---|---|---|---|---|---|
| B | LOCK | 4.0x 6.0 | Ctr | Ctr | 0.63 |
| K | LOCK | 5.0x 7.0 | Ctr | 0.5 | 0.68 |
| L | LOCK | 2.0x 4.0 | Ctr | Ctr | 0.40 |
| C | LOCK | 5.0x 9.0 | Ctr | -0.4 | 0.97 |
| M | LOCK | 3.0x 7.0 | Ctr | Ctr | 0.59 |
| N | LOCK | 3.0x 7.0 | Ctr | Ctr | 0.65 |
| D | LOCK | 4.0x 6.0 | Ctr | 0.1 | 0.64 |
| A | LOCK | 2.0x 4.0 | Ctr | Ctr | 0.42 |
| J | LOCK | 4.0x 8.0 | Ctr | Ctr | 0.69 |
| H | LOCK | 2.0x 4.0 | Ctr | Ctr | 0.58 |
| G | LOCK | 5.0x 9.0 | Ctr | 0.8 | 0.59 |
| I | LOCK | 3.0x 7.0 | Ctr | Ctr | 0.62 |
| F | LOCK | 5.0x 7.0 | Ctr | -1.0 | 0.77 |
| E | LOCK | 5.0x 5.0 | 1.4 | 3.3 | 0.84 |

REVIEWED BY:
Robbins Engineering, Inc.

PO Box 280055
Tampa, FL 33682

REFER TO ROBBINS ENG. GENERAL NOTES AND SYMBOLS SHEET FOR ADDITIONAL SPECIFICATIONS.

NOTES:
Trusses Manufactured by:
Mayo Truss Co. Inc.
Analysis Conforms To:
FBC2004
OH Loading
Soffit psf 2.0
Design checked for 10 psf non-concurrent LL on BC.
Wind Loads - ANSI / ASCE 7-02
Truss is designed as a Main Wind-Force Resistance System.
Wind Speed: 110 mph
Mean Roof Height: 15-0
Exposure Category: B
Occupancy Factor : 1.00
Building Type: Enclosed
Zone location: Exterior
TC Dead Load : 5.0 psf
BC Dead Load : 5.0 psf
Max comp. force 4680 Lbs
Quality Control Factor 1.25

Truss Design Engineer: Thomas A. Albani
License #: 39380
Address: P.O. Box 280055, Tampa, FL 33682

THOMAS A. ALBANI LICENSE No. 39380 STATE OF FLORIDA PROFESSIONAL ENGINEER

Date Sealed: 8/28/2006

# ROBBINS ENG. GENERAL NOTES & SYMBOLS

## PLATE LOCATION

108

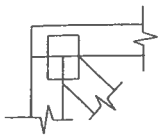

Center plates on joints unless otherwise noted in plate list or on drawing. Dimensions are given in inches (i.e. 1 1/2" or 1.5" ) or IN-16ths (i.e. 108)

## FLOOR TRUSS SPLICE

( 3X2, 4X2, 6X2 )

(W) = Wide Face Plate
(N) = Narrow Face Plate

## LATERAL BRACING

Designates the location for continuous lateral bracing (CLB) for support of individual truss members only. CLBs must be properly anchored or restrained to prevent simultaneous buckling of adjacent truss members.

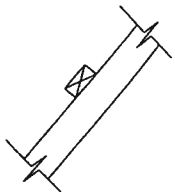

## PLATE SIZE AND ORIENTATION

3x5 ||

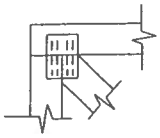

The first dimension is the width measured perpendicular to slots. The second dimension is the length measured parallel to slots. Plate orientation, shown next to plate size, indicates direction of slots in connector plates.

## DIMENSIONS

All dimensions are shown in FT-IN-SX (i.e. 6' 8 1/2" or 6-08-08 ). Dimensions less than one foot are shown in IN-SX only (i.e. 708).

6-08-08

708

## BEARING

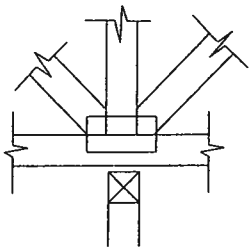

W = Actual Bearing Width (IN-SX)
R = Reaction (lbs.)
U = Uplift (lbs.)

When truss is designed to bear on multiple supports, interior bearing locations should be marked on the truss. Interior support or temporary shoring must be in place before erecting this truss. If necessary, shim bearings to assure solid contact with truss.

ROBBINS connector plates shall be applied on both faces of truss at each joint. Center the plates, unless indicated otherwise. No loose knots or wane in plate contact area. Splice only where shown. Overall spans assume 4" bearing at each end, unless indicated otherwise. Cutting and fabrication shall be performed using equipment which produces snug-fitting joints and plates. Unless otherwise noted, moisture content of lumber shall not exceed 19% at time of fabrication and the attached truss designs are not applicable for use with fire retardant lumber and some preservative treatments. Nails specified on truss design drawings refer to common wire nails, except as noted.
The attached design drawings were prepared in accordance with " National Design Specifications for Wood Construction" (AF & PA )," National Design Standard for Metal Plate Connected Wood Truss Construction" (ANSI/TPI 1), and HUD Design Criteria for Trussed Rafters.

Robbins Eng. Co. bears no responsibility for the erection of trusses, field bracing or permanent truss bracing. Refer to BCSI 1-03 as published by Truss Plate Institute, 218 North Lee Street, Suite 312, Alexandria, Virginia 22314. Persons erecting trusses are cautioned to seek professional advice concerning proper erection bracing to prevent toppling and " dominoing ". Care should be taken to prevent damage during fabrication, storage, shipping and erection. Top and bottom chords shall be adequately braced in the absence of sheathing or rigid ceiling, respectively. It is the responsibility of others to ascertain that design loads utilized on these drawings meet or exceed the actual dead loads imposed by the structure and the live loads imposed by the local building code or historical climatic records.

FURNISH A COPY OF THE ATTACHED TRUSS DESIGN DRAWINGS TO ERECTION CONTRACTOR. IT IS THE RESPONSIBILITY OF THE BUILDING DESIGNER TO REVIEW THESE DRAWINGS AND VERIFY THAT DATA, INCLUDING DIMENSIONS & LOADS, CONFORM TO ARCHITECTURAL PLAN / SPECS AND THE TRUSS PLACEMENT DIAGRAM FURNISHED BY THE TRUSS FABRICATOR.

Robbins Engineering, Inc.

6904 Parke East Blvd.
Tampa, Fl 33610-4115
Tel: 813-972-1135 Fax: 813-971-6117

www.robbinseng.com

Permit Number:_____ Lot Number:_____

Miscellaneous:_____ Address:_____

The information in this box is for administrative purposes only and is not part of the engineering review.

Truss Fabricator:Mayo Truss Company, Inc

Job Reference:BOHLMANN - WHITTAKER - BOHLMANN (2105)

**Standard Loading:**

| | |
|---|---|
| T.C. Live | 20 psf |
| T.C Dead | 10 psf |
| B.C Live | 0 psf |
| B.C. Dead | 10 psf |
| Total | 40 psf |

ANSI/ASCE 7-02
Wind Speed - 120 mph
Mean Roof Ht. - 15 ft.
Exposure Catergory - B
Occupancy Factor - 1.00
MWFRS
Enclosed

ROBBINS ENGINEERING, INC.
P.O. Box 280055
Tampa, FL 33682-0055
Phone: (813) 972-1135

# Engineering Index Sheet

Index Page 1 of 1

| Job Number | Date | | Specification Quantity |
|---|---|---|---|
| T06031832 | 03/17/2006 | FBC - 2004 Chapter 16 and 23 | 5 |

A Professional Engineer's seal affixed to this Index Sheet indicates the acceptance of Professional Engineering responsibilities for individual truss components fabricated in accordance with the listed and attached Truss Specification Sheets. Determination as to the suitability of these individual truss components for any structure is the responsibilty of the Building Designer, as defined in ANSI/TPI 1-1995, Section 2.2. Permanent files of the original Truss Specificstion Sheet are maintained by Robbins Engineering, Inc. Questions regarding this Index Sheet and/or the attached Specification Sheets may be directed to the truss fabricator listed above or Robbins Engineering, Inc. (Sofware - Online Plus)

Notes: Refer to individual truss design drawings for special loading conditions.

| | Date | Mark | | Date | Mark | | Date | Mark | | Date | Mark |
|---|---|---|---|---|---|---|---|---|---|---|---|
| 1 | 03/17/06 | CJ1 | 2 | 03/17/06 | J1 | 3 | 03/17/06 | J2 | 4 | 03/17/06 | J3 |
| 5 | 03/17/06 | J4 | | | | | | | | | |

Truss Design Engineer: Vuong Phan
License #: 62111
Address: P.O. Box 280055, Tampa, FL 33682

VUONG PHAN
LICENSE
No. 62111
STATE OF FLORIDA
PROFESSIONAL ENGINEER

Date Sealed: 3/17/2006

| Job | Mark | Quan | Type | Span | P1-H1 | Left OH | Right OH | Engineering |
|---|---|---|---|---|---|---|---|---|
| BOHLMANN | CJ1 | 2 | MONO | 91013 | 4.243 | 2- 9-15 | 0 | T06031832 |

WHITTAKER - BOHLMANN (2105)

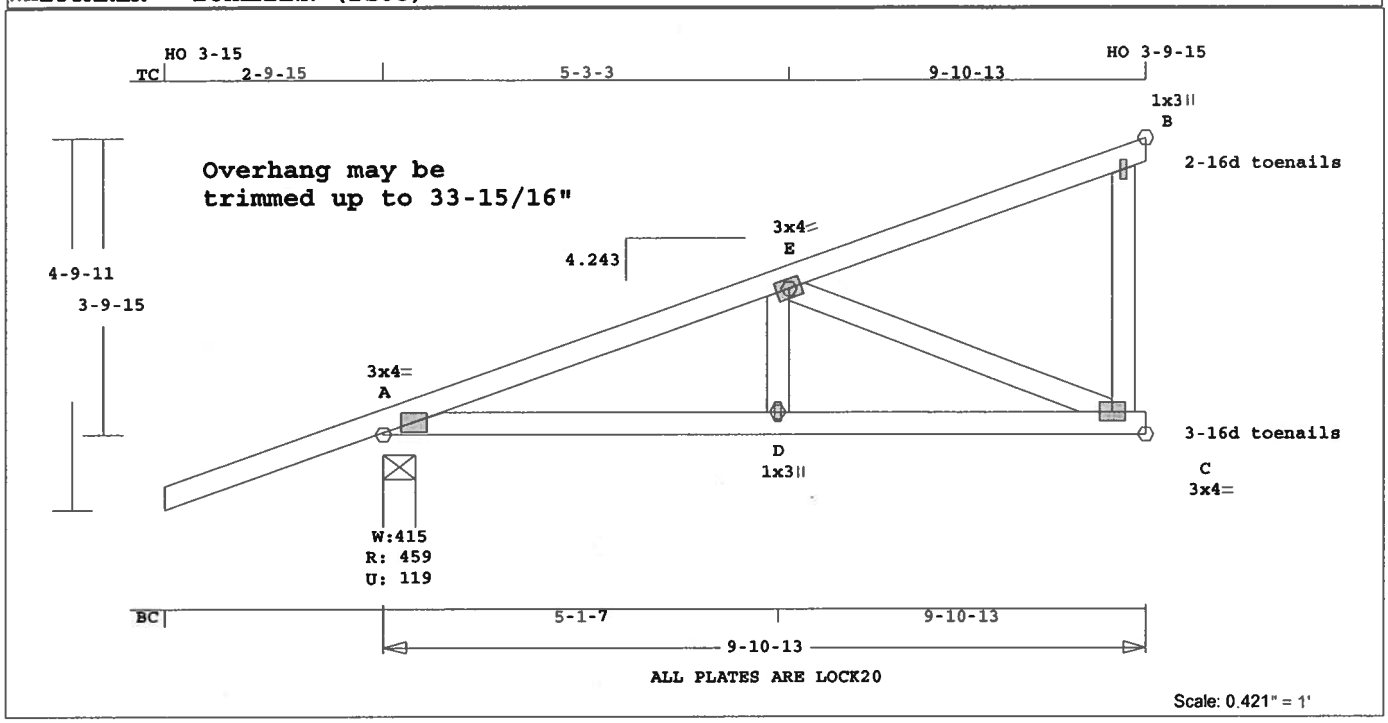


Robbins Engineering, Inc./Online Plus™ APPROX. TRUSS WEIGHT: 61.9 LBS

Online Plus -- Version 19.0.009
RUN DATE: 16-MAR-06

| | CSI | -Size- | ----Lumber---- |
|---|---|---|---|
| TC | 0.36 | 2x 4 | SP-#2 |
| BC | 0.27 | 2x 4 | SP-#2 |
| WB | 0.19 | 2x 4 | SP-#2 |

Brace truss as follows:

| | O.C. | From | To |
|---|---|---|---|
| TC Cont. | | 0- 0- 0 | 9-10-13 |
| BC Cont. | | 0- 0- 0 | 9-10-13 |

| Loading | Live | Dead | (psf) |
|---|---|---|---|
| TC | 20.0 | 10.0 | |
| BC | 0.0 | 10.0 | |
| Total | 20.0 | 20.0 | 40.0 |
| Spacing | | | 24.0" |

Lumber Duration Factor 1.25
Plate Duration Factor 1.25
TC Fb=1.00 Fc=1.00 Ft=1.00
BC Fb=1.00 Fc=1.00 Ft=1.00

Load Case # 1 Girder Loading
Lumber Duration Factor 1.25
Plate Duration Factor 1.25

| plf - | Live | Dead | From | To |
|---|---|---|---|---|
| TC V | 40 | 20 | 0.0' | 9.9' |
| BC V | 0 | 20 | 0.0' | 9.9' |
| TC V | -40 | -20 | 0.0' | |
| | 45 | 22 | | 9.9' |
| BC V | 0 | -20 | 0.0' | |
| | 0 | 22 | | 9.9' |

Plus 5 Wind Load Case(s)
Plus 1 UBC LL Load Case(s)

| Jt | React Lbs | Uplft Lbs | Size In-Sx | Req'd In-Sx |
|---|---|---|---|---|
| A | 459 | 119 | 4-15 | 1- 8 |
| | | | Hz = | -51 |
| C | 336 | 32 | 3- 8 | 1- 8 |
| B | 220 | 97 | 3- 8 | 1- 8 |
| | | | Hz = | 148 |

| Membr | CSI | P Lbs | Axl-CSI-Bnd | |
|---|---|---|---|---|
| ----------Top Chords---------- | | | | |
| A -E | 0.30 | 634 C | 0.00 | 0.30 |
| E -B | 0.36 | 92 T | 0.00 | 0.36 |
| --------Bottom Chords--------- | | | | |
| A -D | 0.23 | 614 T | 0.07 | 0.16 |
| D -C | 0.27 | 614 T | 0.07 | 0.20 |
| ----------Webs---------- | | | | |
| D -E | 0.03 | 235 T | | |
| E -C | 0.19 | 663 C | | |
| C -B | 0.02 | 0 T | WindLd | |

TL Defl -0.05" in D -C L/999
LL Defl -0.02" in D -C L/999
Shear // Grain in E -B 0.27

Plates for each ply each face.
PLATING CONFORMS TO TPI.
REPORT: NER 691
ROBBINS ENGINEERING, INC.
BASED ON SP LUMBER
USING GROSS AREA TEST.
Plate - LOCK 20 Ga, Gross Area
Plate - RHS 20 Ga, Gross Area

| Jt | Type | Plt Size | X | Y | JSI |
|---|---|---|---|---|---|
| A | LOCK | 3.0x 4.0 | Ctr | Ctr | 0.64 |
| E | LOCK | 3.0x 4.0 | Ctr | Ctr | 0.43 |
| B | LOCK | 1.0x 3.0 | Ctr | Ctr | 0.75 |
| D | LOCK | 1.0x 3.0 | Ctr | Ctr | 0.75 |
| C | LOCK | 3.0x 4.0 | Ctr | Ctr | 0.54 |

REVIEWED BY:
Robbins Engineering, Inc.
PO Box 280055
Tampa, FL 33682

REFER TO ROBBINS ENG. GENERAL NOTES AND SYMBOLS SHEET FOR ADDITIONAL SPECIFICATIONS.

For proper installation of toe-nails, refer to the 2001 National Design Specification (NDS) for Wood Construction

NOTES:

Trusses Manufactured by:
Mayo Truss Co. Inc.
Analysis Conforms To:
FBC2004
Girder King Jack
Loading TC and BC
Setback 7- 0- 0
OH Loading
Soffit psf 2.0
Design checked for 10 psf non-concurrent LL on BC.
Use properly rated hangers for loads framing into girder truss.
Wind Loads - ANSI / ASCE 7-02
Truss is designed as a Main Wind-Force Resistance System.
Wind Speed: 120 mph
Mean Roof Height: 15-0
Exposure Category: B
Occupancy Factor : 1.00
Building Type: Enclosed
Zone location: Exterior
TC Dead Load : 5.0 psf
BC Dead Load : 5.0 psf
Max comp. force 663 Lbs
Quality Control Factor 1.25

Truss Design Engineer: Vuong Phan
License #: 62111
Address: P.O. Box 280055, Tampa, FL 33682

VUONG PHAN
LICENSE
No. 62111
STATE OF FLORIDA
PROFESSIONAL ENGINEER

Date Sealed: 3/17/2006

| Job | Mark | Quan | Type | Span | P1-H1 | Left OH | Right OH | Engineering |
|---|---|---|---|---|---|---|---|---|
| BOHLMANN | J1 | 23 | JCA2 | 70000 | 6 | 2- 0- 0 | 0 | T06031832 |

WHITTAKER - BOHLMANN (2105)

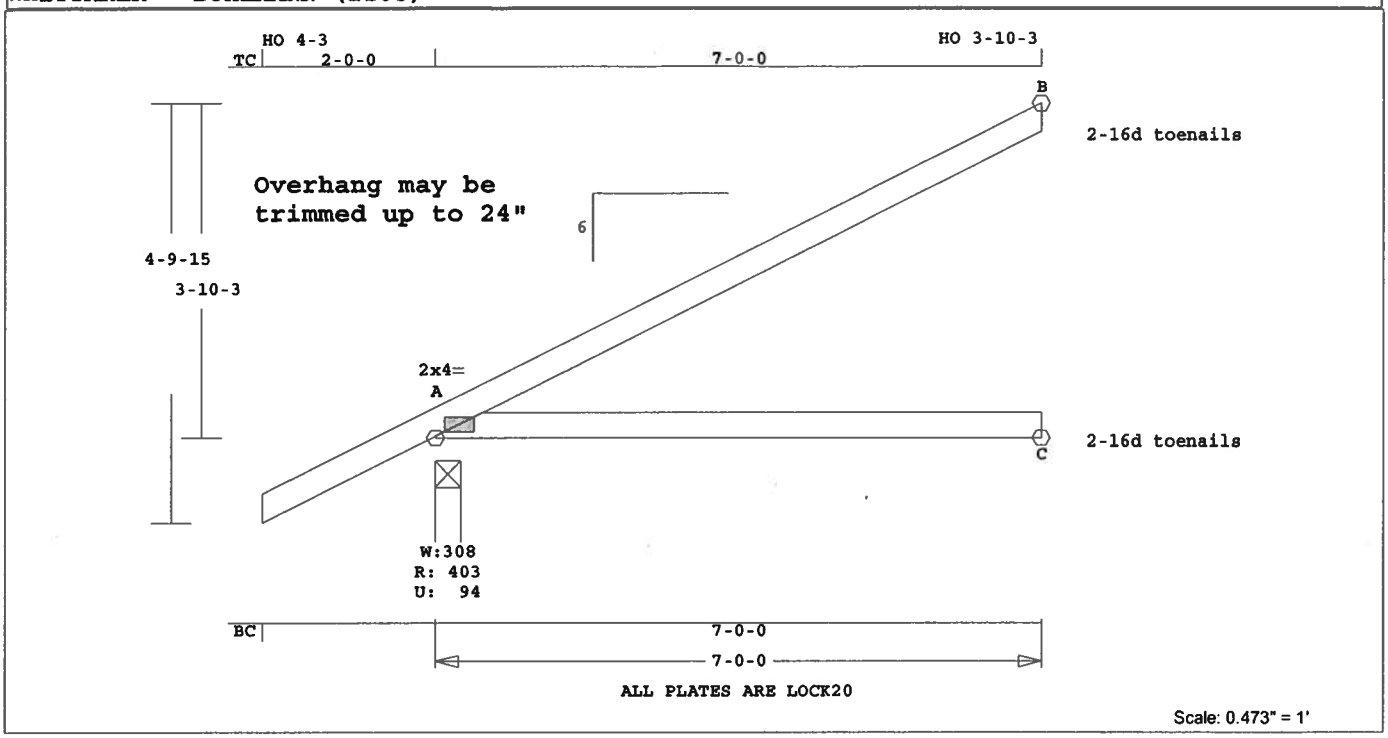


Robbins Engineering, Inc./Online Plus™ APPROX. TRUSS WEIGHT: 32.5 LBS

Online Plus -- Version 19.0.009
RUN DATE: 16-MAR-06

| | CSI | -Size- | ----Lumber---- |
|---|---|---|---|
| TC | 0.47 | 2x 4 | SP-#2 |
| BC | 0.34 | 2x 4 | SP-#2 |

Brace truss as follows:

| | O.C. | From | To |
|---|---|---|---|
| TC Cont. | | 0- 0- 0 | 7- 0- 0 |
| BC Cont. | | 0- 0- 0 | 7- 0- 0 |

| Loading | Live | Dead | (psf) |
|---|---|---|---|
| TC | 20.0 | 10.0 | |
| BC | 0.0 | 10.0 | |
| Total | 20.0 | 20.0 | 40.0 |
| Spacing | | | 24.0" |
| Lumber Duration Factor | | | 1.25 |
| Plate Duration Factor | | | 1.25 |

TC Fb=1.15 Fc=1.10 Ft=1.10
BC Fb=1.10 Fc=1.10 Ft=1.10

Plus 5 Wind Load Case(s)
Plus 1 UBC LL Load Case(s)

| Jt | React Lbs | Uplft Lbs | Size In-Sx | Req'd In-Sx |
|---|---|---|---|---|
| A | 404 | 95 | 3- 8 | 1- 8 |
| | | | Hz = | 126 |
| C | 132 | 0 | 3- 8 | 1- 8 |
| B | 196 | 108 | 3- 8 | 1- 8 |
| | | | Hz = | 86 |

| Membr | CSI | P Lbs | Axl-CSI-Bnd |
|---|---|---|---|
| ----------Top Chords---------- | | | |
| A -B | 0.47 | 63 C | 0.00 0.47 |
| --------Bottom Chords--------- | | | |
| A -C | 0.34 | 0 T | 0.00 0.34 |

TL Defl -0.18" in A -C L/427
LL Defl -0.07" in A -C L/999
Shear // Grain in A -B 0.22

Plates for each ply each face.
PLATING CONFORMS TO TPI.
REPORT: NER 691
ROBBINS ENGINEERING, INC.
BASED ON SP LUMBER
USING GROSS AREA TEST.
Plate - LOCK 20 Ga, Gross Area
Plate - RHS 20 Ga, Gross Area

| Jt | Type | Plt Size | X | Y | JSI |
|---|---|---|---|---|---|
| A | LOCK | 2.0x 4.0 | Ctr | Ctr | 0.69 |

REVIEWED BY:
Robbins Engineering, Inc.
PO Box 280055
Tampa, FL 33682

REFER TO ROBBINS ENG. GENERAL NOTES AND SYMBOLS SHEET FOR ADDITIONAL SPECIFICATIONS.

For proper installation of toe-nails, refer to the 2001 National Design Specification (NDS) for Wood Construction

NOTES:
Trusses Manufactured by:
Mayo Truss Co. Inc.
Analysis Conforms To:
FBC2004
OH Loading
Soffit psf 2.0
Design checked for 10 psf non-concurrent LL on BC.
Wind Loads - ANSI / ASCE 7-02
Truss is designed as a Main Wind-Force Resistance System.
Wind Speed: 120 mph
Mean Roof Height: 15-0
Exposure Category: B
Occupancy Factor : 1.00
Building Type: Enclosed
Zone location: Exterior
TC Dead Load : 5.0 psf
BC Dead Load : 5.0 psf
Max comp. force 63 Lbs
Quality Control Factor 1.25

Truss Design Engineer: Vuong Phan
License #: 62111
Address: P.O. Box 280055, Tampa, FL 33682

VUONG PHAN LICENSE No. 62111 STATE OF FLORIDA PROFESSIONAL ENGINEER

Date Sealed: 3/17/2006

| Job | Mark | Quan | Type | Span | Pl-H1 | Left OH | Right OH | Engineering |
|---|---|---|---|---|---|---|---|---|
| BOHLMANN | J2 | 4 | JCA2 | 50000 | 6 | 2- 0- 0 | 0 | T06031832 |

WHITTAKER - BOHLMANN (2105)

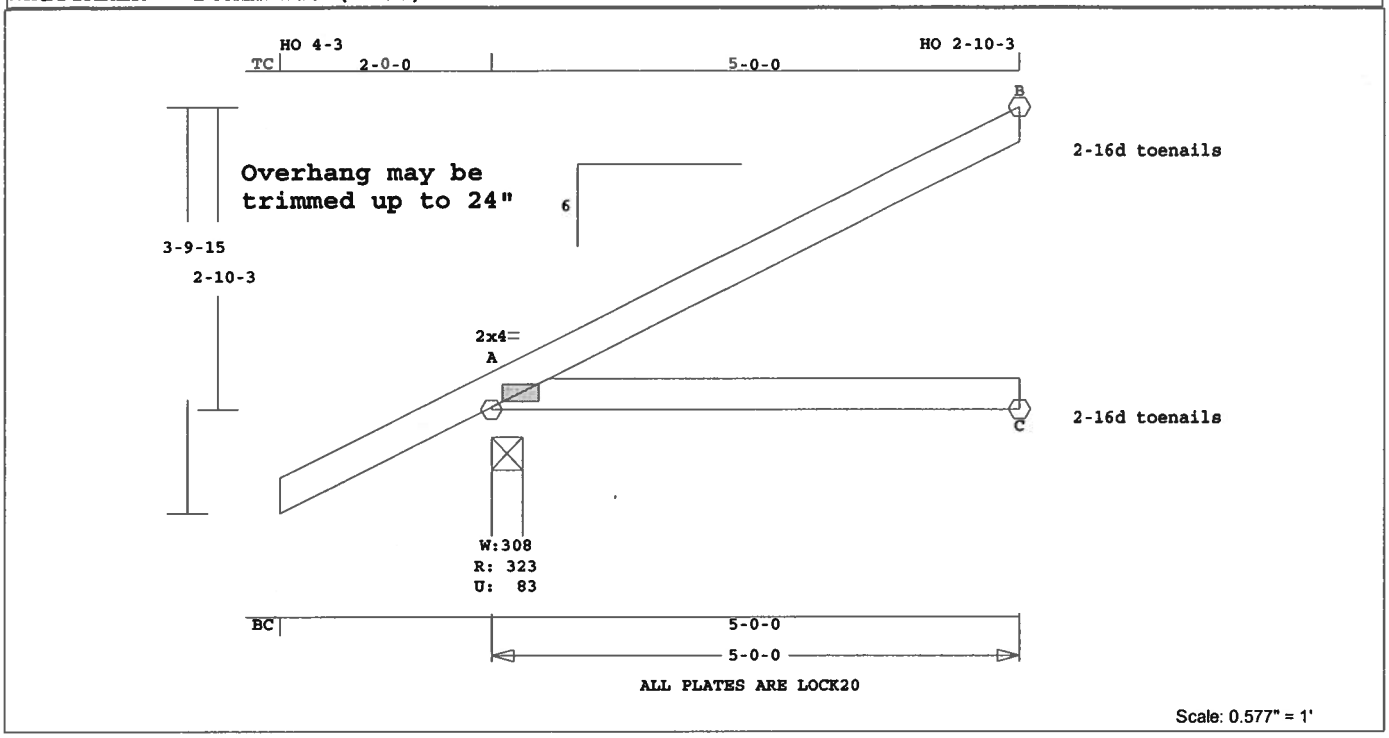


Robbins Engineering, Inc./Online Plus™ APPROX. TRUSS WEIGHT: 24.5 LBS

Online Plus -- Version 19.0.009
RUN DATE: 16-MAR-06

| | CSI | -Size- | ----Lumber---- |
|---|---|---|---|
| TC | 0.22 | 2x 4 | SP-#2 |
| BC | 0.16 | 2x 4 | SP-#2 |

Brace truss as follows:

| | O.C. | From | To |
|---|---|---|---|
| TC Cont. | | 0- 0- 0 | 5- 0- 0 |
| BC Cont. | | 0- 0- 0 | 5- 0- 0 |

| Loading | Live | Dead | (psf) |
|---|---|---|---|
| TC | 20.0 | 10.0 | |
| BC | 0.0 | 10.0 | |
| Total | 20.0 | 20.0 | 40.0 |
| Spacing | | | 24.0" |

Lumber Duration Factor 1.25
Plate Duration Factor 1.25
TC Fb=1.15 Fc=1.10 Ft=1.10
BC Fb=1.10 Fc=1.10 Ft=1.10

Plus 5 Wind Load Case(s)
Plus 1 UBC LL Load Case(s)

| Jt | React Lbs | Uplft Lbs | Size In-Sx | Req'd In-Sx |
|---|---|---|---|---|
| A | 324 | 83 | 3- 8 | 1- 8 |
| | | | Hz = | 90 |
| C | 94 | 0 | 3- 8 | 1- 8 |
| B | 142 | 78 | 3- 8 | 1- 8 |
| | | | Hz = | 61 |

| Membr | CSI | P Lbs | Axl-CSI-Bnd |
|---|---|---|---|
| ----------Top Chords---------- | | | |
| A -B | 0.22 | 45 C | 0.00 0.22 |
| --------Bottom Chords--------- | | | |
| A -C | 0.16 | 0 T | 0.00 0.16 |

TL Defl -0.04" in A -C L/999
LL Defl -0.02" in A -C L/999
Shear // Grain in A -B 0.15

Plates for each ply each face.
PLATING CONFORMS TO TPI.
REPORT: NER 691
ROBBINS ENGINEERING, INC.
BASED ON SP LUMBER
USING GROSS AREA TEST.
Plate - LOCK 20 Ga, Gross Area
Plate - RHS 20 Ga, Gross Area

| Jt | Type | Plt Size | X | Y | JSI |
|---|---|---|---|---|---|
| A | LOCK | 2.0x 4.0 | Ctr | Ctr | 0.65 |

REVIEWED BY:
Robbins Engineering, Inc.
PO Box 280055
Tampa, FL 33682

REFER TO ROBBINS ENG. GENERAL NOTES AND SYMBOLS SHEET FOR ADDITIONAL SPECIFICATIONS.

For proper installation of toe-nails, refer to the 2001 National Design Specification (NDS) for Wood Construction

NOTES:
Trusses Manufactured by:
Mayo Truss Co. Inc.
Analysis Conforms To:
FBC2004
OH Loading
Soffit psf 2.0
Design checked for 10 psf non-concurrent LL on BC.
Wind Loads - ANSI / ASCE 7-02
Truss is designed as a Main Wind-Force Resistance System.
Wind Speed: 120 mph
Mean Roof Height: 15-0
Exposure Category: B
Occupancy Factor : 1.00
Building Type: Enclosed
Zone location: Exterior
TC Dead Load : 5.0 psf
BC Dead Load : 5.0 psf
Max comp. force 45 Lbs
Quality Control Factor 1.25

Truss Design Engineer: Vuong Phan
License #: 62111
Address: P.O. Box 280055, Tampa, FL 33682

Date Sealed: 3/17/2006

| Job | Mark | Quan | Type | Span | P1-H1 | Left OH | Right OH | Engineering |
|---|---|---|---|---|---|---|---|---|
| BOHLMANN | J3 | 4 | JCA2 | 30000 | 6 | 2- 0- 0 | 0 | T06031832 |

WHITTAKER - BOHLMANN (2105)

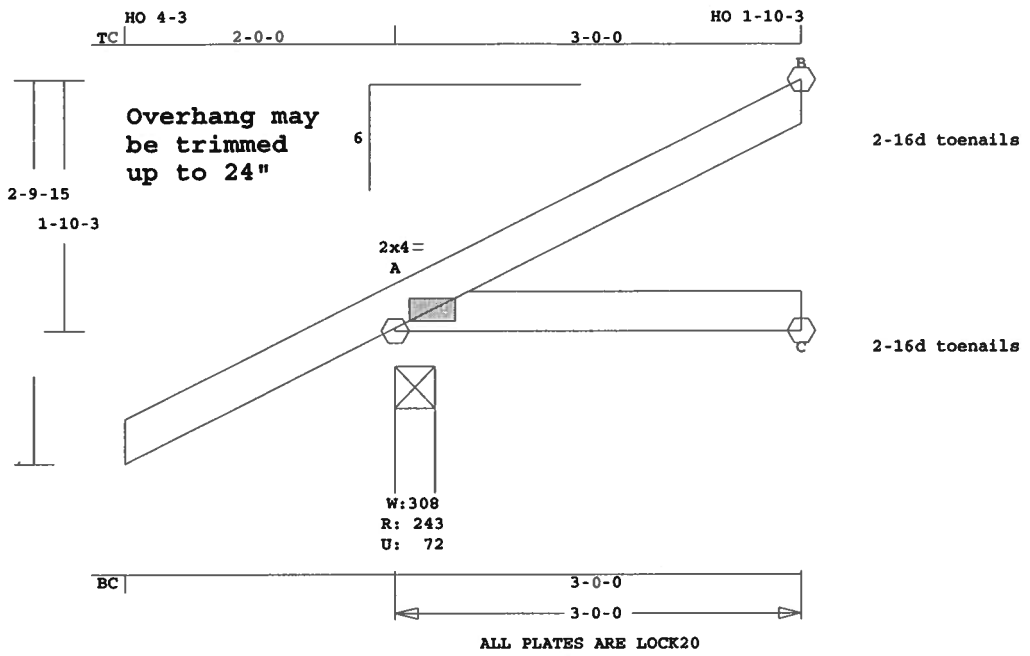


Scale: 0.739" = 1'

Robbins Engineering, Inc./Online Plus™ APPROX. TRUSS WEIGHT: 16.5 LBS

Online Plus -- Version 19.0.009
RUN DATE: 16-MAR-06

| | CSI | -Size- | ----Lumber---- |
|---|---|---|---|
| TC | 0.06 | 2x 4 | SP-#2 |
| BC | 0.05 | 2x 4 | SP-#2 |

Brace truss as follows:

| O.C. | From | To |
|---|---|---|
| TC Cont. | 0- 0- 0 | 3- 0- 0 |
| BC Cont. | 0- 0- 0 | 3- 0- 0 |

| Loading | Live | Dead | (psf) |
|---|---|---|---|
| TC | 20.0 | 10.0 | |
| BC | 0.0 | 10.0 | |
| Total | 20.0 | 20.0 | 40.0 |
| Spacing | | | 24.0" |

Lumber Duration Factor 1.25
Plate Duration Factor 1.25
TC Fb=1.15 Fc=1.10 Ft=1.10
BC Fb=1.10 Fc=1.10 Ft=1.10

Plus 5 Wind Load Case(s)
Plus 1 UBC LL Load Case(s)

| Jt | React Lbs | Uplft Lbs | Size In-Sx | Req'd In-Sx |
|---|---|---|---|---|
| A | 243 | 72 | 3- 8 | 1- 8 |
| | | | Hz = | 53 |
| C | 56 | 0 | 3- 8 | 1- 8 |
| B | 88 | 49 | 3- 8 | 1- 8 |
| | | | Hz = | 36 |

| Membr | CSI | P Lbs | Axl-CSI-Bnd |
|---|---|---|---|
| ----------Top Chords---------- | | | |
| A -B | 0.06 | 28 C | 0.00 0.06 |
| --------Bottom Chords--------- | | | |
| A -C | 0.05 | 0 T | 0.00 0.05 |

TL Defl 0.00" in A -C L/999
LL Defl 0.00" in A -C L/999
Shear // Grain in A -B 0.08

Plates for each ply each face.
PLATING CONFORMS TO TPI.
REPORT: NER 691
ROBBINS ENGINEERING, INC.
BASED ON SP LUMBER
USING GROSS AREA TEST.
Plate - LOCK 20 Ga, Gross Area
Plate - RHS 20 Ga, Gross Area

| Jt | Type | Plt Size | X | Y | JSI |
|---|---|---|---|---|---|
| A | LOCK | 2.0x 4.0 | Ctr | Ctr | 0.65 |

REVIEWED BY:
Robbins Engineering, Inc.
PO Box 280055
Tampa, FL 33682

REFER TO ROBBINS ENG. GENERAL NOTES AND SYMBOLS SHEET FOR ADDITIONAL SPECIFICATIONS.

For proper installation of toe-nails, refer to the 2001 National Design Specification (NDS) for Wood Construction

NOTES:
Trusses Manufactured by:
Mayo Truss Co. Inc.
Analysis Conforms To:
FBC2004
OH Loading
Soffit psf 2.0
Design checked for 10 psf non-concurrent LL on BC.
Wind Loads - ANSI / ASCE 7-02
Truss is designed as a Main Wind-Force Resistance System.
Wind Speed: 120 mph
Mean Roof Height: 15-0
Exposure Category: B
Occupancy Factor : 1.00
Building Type: Enclosed
Zone location: Exterior
TC Dead Load : 5.0 psf
BC Dead Load : 5.0 psf
Max comp. force 28 Lbs
Quality Control Factor 1.25

Truss Design Engineer: Vuong Phan
License #: 62111
Address: P.O. Box 280055, Tampa, FL 33682

VUONG PHAN LICENSE No. 62111 STATE OF FLORIDA PROFESSIONAL ENGINEER

Date Sealed: 3/17/2006

| Job | Mark | Quan | Type | Span | P1-H1 | Left OH | Right OH | Engineering |
|---|---|---|---|---|---|---|---|---|
| BOHLMANN | J4 | 6 | JCA2 | 10000 | 6 | 2- 0- 0 | 0 | T06031832 |

WHITTAKER - BOHLMANN (2105)

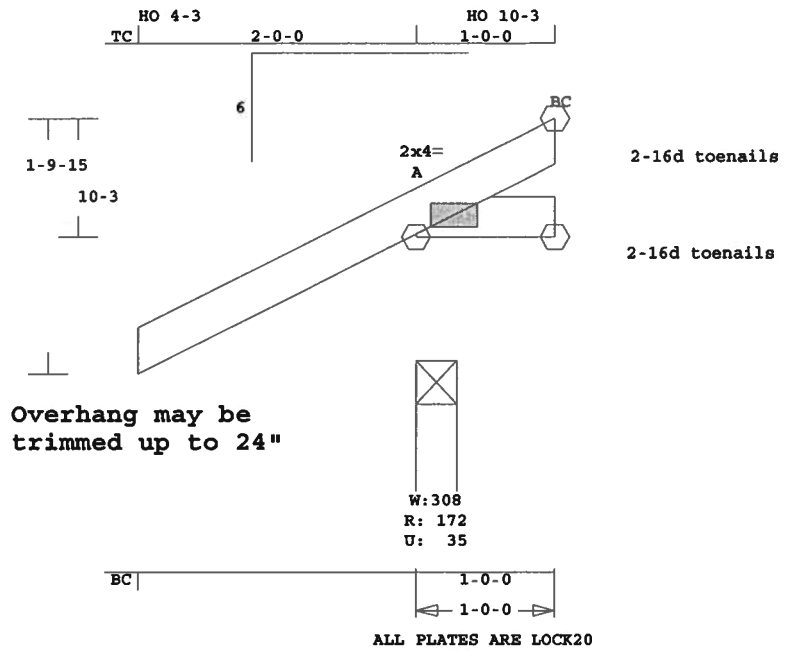


Scale: 0.759" = 1'

Robbins Engineering, Inc./Online Plus™ APPROX. TRUSS WEIGHT: 8.5 LBS

Online Plus -- Version 19.0.009
RUN DATE: 16-MAR-06

| | CSI | -Size- | ----Lumber---- |
|---|---|---|---|
| TC | 0.00 | 2x 4 | SP-#2 |
| BC | 0.00 | 2x 4 | SP-#2 |

Brace truss as follows:

| | O.C. | From | To |
|---|---|---|---|
| TC Cont. | | 0- 0- 0 | 1- 0- 0 |
| BC Cont. | | 0- 0- 0 | 1- 0- 0 |

| Loading | Live | Dead | (psf) |
|---|---|---|---|
| TC | 20.0 | 10.0 | |
| BC | 0.0 | 10.0 | |
| Total | 20.0 | 20.0 | 40.0 |
| Spacing | | | 24.0" |

Lumber Duration Factor 1.25
Plate Duration Factor 1.25
TC Fb=1.15 Fc=1.10 Ft=1.10
BC Fb=1.10 Fc=1.10 Ft=1.10

Plus 5 Wind Load Case(s)
Plus 1 UBC LL Load Case(s)

| Jt | React Lbs | Uplft Lbs | Size In-Sx | Req'd In-Sx |
|---|---|---|---|---|
| A | 172 | 35 | 3- 8 | 1- 8 |
| | | | Hz = | 16 |
| B | 20 | 11 | 1- 8 | 1- 8 |
| C | 14 | 1 | 1- 8 | 1- 8 |
| | | | Hz = | 11 |

| Membr | CSI | P Lbs | Axl-CSI-Bnd |
|---|---|---|---|
| ----------Top Chords---------- | | | |
| A -B | 0.00 | 6 | C |
| --------Bottom Chords--------- | | | |
| A -C | 0.00 | 10 | T |

TL Defl 0.00" in A -C L/999
LL Defl 0.00" in A -C L/999
Shear // Grain in A -B 0.02

Plates for each ply each face.
PLATING CONFORMS TO TPI.
REPORT: NER 691
ROBBINS ENGINEERING, INC.
BASED ON SP LUMBER
USING GROSS AREA TEST.
Plate - LOCK 20 Ga, Gross Area
Plate - RHS 20 Ga, Gross Area

| Jt | Type | Plt Size | X | Y | JSI |
|---|---|---|---|---|---|
| A | LOCK | 2.0x 4.0 | Ctr | Ctr | 0.65 |

REVIEWED BY:
Robbins Engineering, Inc.
PO Box 280055
Tampa, FL 33682

REFER TO ROBBINS ENG. GENERAL NOTES AND SYMBOLS SHEET FOR ADDITIONAL SPECIFICATIONS.

For proper installation of toe-nails, refer to the 2001 National Design Specification (NDS) for Wood Construction

NOTES:
Trusses Manufactured by:
Mayo Truss Co. Inc.
Analysis Conforms To:
FBC2004
OH Loading
Soffit psf 2.0
Design checked for 10 psf non-concurrent LL on BC.
Wind Loads - ANSI / ASCE 7-02
Truss is designed as a Main Wind-Force Resistance System.
Wind Speed: 120 mph
Mean Roof Height: 15-0
Exposure Category: B
Occupancy Factor : 1.00
Building Type: Enclosed
Zone location: Exterior
TC Dead Load : 5.0 psf
BC Dead Load : 5.0 psf
Max comp. force 6 Lbs
Quality Control Factor 1.25

Truss Design Engineer: Vuong Phan
License #: 62111
Address: P.O. Box 280055, Tampa, FL 33682

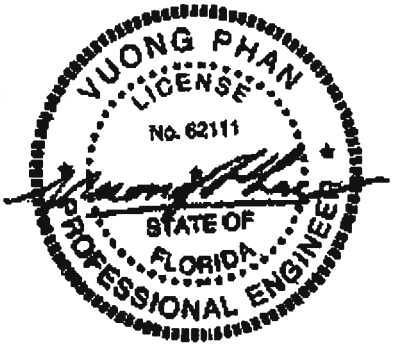


Date Sealed: 3/17/2006

# ROBBINS ENG. GENERAL NOTES & SYMBOLS

## PLATE LOCATION

108

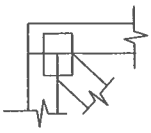

Center plates on joints unless otherwise noted in plate list or on drawing. Dimensions are given in inches (i.e. 1 1/2" or 1.5" ) or IN-16ths (i.e. 108)

## FLOOR TRUSS SPLICE ( 3X2, 4X2, 6X2 )

(W) = Wide Face Plate
(N) = Narrow Face Plate

## LATERAL BRACING

Designates the location for continuous lateral bracing (CLB) for support of individual truss members only. CLBs must be properly anchored or restrained to prevent simultaneous buckling of adjacent truss members.

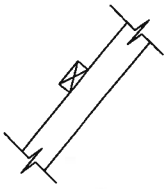

## PLATE SIZE AND ORIENTATION

3x5 ||

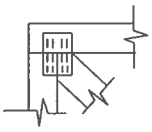

The first dimension is the width measured perpendicular to slots. The second dimension is the length measured parallel to slots. Plate orientation, shown next to plate size, indicates direction of slots in connector plates.

## DIMENSIONS

All dimensions are shown in FT-IN-SX (i.e. 6' 8 1/2" or 6-08-08 ). Dimensions less than one foot are shown in IN-SX only (i.e. 708).

6-08-08

708

## BEARING

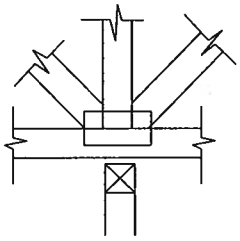

W = Actual Bearing Width (IN-SX)
R = Reaction (lbs.)
U = Uplift (lbs.)

When truss is designed to bear on multiple supports, interior bearing locations should be marked on the truss. Interior support or temporary shoring must be in place before erecting this truss. If necessary, shim bearings to assure solid contact with truss.

ROBBINS connector plates shall be applied on both faces of truss at each joint. Center the plates, unless indicated otherwise. No loose knots or wane in plate contact area. Splice only where shown. Overall spans assume 4" bearing at each end, unless indicated otherwise. Cutting and fabrication shall be performed using equipment which produces snug-fitting joints and plates. Unless otherwise noted, moisture content of lumber shall not exceed 19% at time of fabrication and the attached truss designs are not applicable for use with fire retardant lumber and some preservative treatments. Nails specified on truss design drawings refer to common wire nails, except as noted.
The attached design drawings were prepared in accordance with " National Design Specifications for Wood Construction" (AF & PA )," National Design Standard for Metal Plate Connected Wood Truss Construction" (ANSI/TPI 1), and HUD Design Criteria for Trussed Rafters.

Robbins Eng. Co. bears no responsibility for the erection of trusses, field bracing or permanent truss bracing. Refer to BCSI 1-03 as published by Truss Plate Institute, 218 North Lee Street, Suite 312, Alexandria, Virginia 22314. Persons erecting trusses are cautioned to seek professional advice concerning proper erection bracing to prevent toppling and " dominoing ". Care should be taken to prevent damage during fabrication, storage, shipping and erection. Top and bottom chords shall be adequately braced in the absence of sheathing or rigid ceiling, respectively. It is the responsibility of others to ascertain that design loads utilized on these drawings meet or exceed the actual dead loads imposed by the structure and the live loads imposed by the local building code or historical climatic records.

FURNISH A COPY OF THE ATTACHED TRUSS DESIGN DRAWINGS TO ERECTION CONTRACTOR. IT IS THE RESPONSIBILITY OF THE BUILDING DESIGNER TO REVIEW THESE DRAWINGS AND VERIFY THAT DATA, INCLUDING DIMENSIONS & LOADS, CONFORM TO ARCHITECTURAL PLAN / SPECS AND THE TRUSS PLACEMENT DIAGRAM FURNISHED BY THE TRUSS FABRICATOR.

Robbins Engineering, Inc.

6904 Parke East Blvd.
Tampa, Fl 33610-4115
Tel: 813-972-1135 Fax: 813-971-6117

www.robbinseng.com