This document has been electronically signed using a Digital Signature. Printed copies without an original signature must be verified using the original electronic version.

WILLIAM H. KRICK
LICENSE
No. 70861
STATE OF FLORIDA
PROFESSIONAL ENGINEER

ALPINE
AN ITW COMPANY

COA #0 278

Florida Certificate of Product Approval #FL 1999
05/11/2022

Alpine, an ITW Company
155 Harlem Ave
North Building, 4th Floor
Glenview, IL 60025
Phone: (800)755-6001
www.alpineitw.com

COLUMBIA COUNTY BUILDING DEPARTMENT
Received for FILE COPY
Code Compliance
PLANS EXAMINER

Site Information:	Page 1:
Customer: W. B. Howland Company, Inc.	*Job Number:* 22-7559
Job Description: Judy Baughn	
Address: Lot 11 Marion Place, LAKE CITY, FL	

Job Engineering Criteria:	
Design Code: FBC 7th Ed. 2020 Res.	*IntelliVIEW Version:* 21.02.01 *JRef #:* 1Xff2150006
Wind Standard: ASCE 7-16 *Wind Speed (mph):* 130 *Building Type:* Closed	*Design Loading (psf):* 40.00

This package contains general notes pages, 49 truss drawing(s) and 4 detail(s).

Item	Drawing Number	Truss	Item	Drawing Number	Truss
1	131.22.0817.12267	A01	2	131.22.0816.09757	B01
3	131.22.0815.58500	B02	4	131.22.0815.46707	B03
5	131.22.0815.44870	B04	6	131.22.0815.16527	B05
7	131.22.0815.14730	C01	8	131.22.0814.57893	C02
9	131.22.0814.55547	C03	10	131.22.0814.53603	C04
11	131.22.0814.51437	C05	12	131.22.0814.49760	C06
13	131.22.0814.47757	C07	14	131.22.0814.45207	C08
15	131.22.0814.43433	C09	16	131.22.0814.41420	C10
17	131.22.0814.39027	C11	18	131.22.0814.27277	D01
19	131.22.0814.14407	D02	20	131.22.0814.05043	D03
21	131.22.0814.03123	D04	22	131.22.0814.01340	D05
23	131.22.0813.59597	D06	24	131.22.0813.53477	D07
25	131.22.0813.51707	D08	26	131.22.0813.49880	D09
27	131.22.0813.47980	D10	28	131.22.0813.46337	D11
29	131.22.0813.44613	D12	30	131.22.0813.42793	D13
31	131.22.0813.40353	D14	32	131.22.0812.08730	HJ01
33	131.22.0811.57737	HJ02	34	131.22.0811.42820	HJ03
35	131.22.0811.31850	HJ04	36	131.22.0811.24277	J01
37	131.22.0811.22030	J02	38	131.22.0811.19360	J03
39	131.22.0811.16060	J04	40	131.22.0811.13483	J05
41	131.22.0811.10740	J06	42	131.22.0811.08660	J07
43	131.22.0811.06047	J08	44	131.22.0811.04210	J09
45	131.22.0811.01340	J10	46	131.22.0810.59670	J11
47	131.22.0810.58220	J12	48	131.22.0810.56537	J13
49	131.22.0810.54740	J14	50	A14015ENC160118	

This document has been electronically signed using a Digital Signature. Printed copies without an original signature must be verified using the original electronic version.

WILLIAM H. KRICK
LICENSE
No. 70861
STATE OF
FLORIDA
PROFESSIONAL ENGINEER

COA #0 278

Florida Certificate of Product Approval #FL 1999
05/11/2022

Alpine, an ITW Company
155 Harlem Ave
North Building, 4th Floor
Glenview, IL 60025
Phone: (800)755-6001
www.alpineitw.com

Site Information:	Page 2:
Customer: W. B. Howland Company, Inc.	*Job Number:* 22-7559
Job Description: Judy Baughn	
Address: Lot 11 Marion Place, LAKE CITY, FL	

Item	Drawing Number	Truss
51	GBLLETIN0118	
53	CNNAILSP1014	

Item	Drawing Number	Truss
52	BRCLBSUB0119	

General Notes

Truss Design Engineer Scope of Work, Design Assumptions and Design Responsibilities:
The design responsibilities assumed in the preparation of these design drawings are those specified in ANSI/TPI 1, Chapter 2; and the National Design Standard for Metal Plate Connected Wood Truss Construction, by the Truss Plate Institute. The truss component designs conform to the applicable provisions of ANSI/TPI 1 and NDS, the National Design Specification for Wood Construction by AWC. The truss component designs are based on the specified loading and dimension information furnished by others to the Truss Design Engineer. The Truss Design Engineer has no duty to independently verify the accuracy or completeness of the information provided by others and may rely on that information without liability. The responsibility for verification of that information remains with others neither employed nor controlled by the Truss Design Engineer. The Truss Design Engineer's seal and signature on the attached drawings, or cover page listing these drawings, indicates acceptance of professional engineering responsibility solely for the truss component designs and not for the technical information furnished by others which technical information and consequences thereof remain their sole responsibility.

The suitability and use of these drawings for any particular structure is the responsibility of the Building Designer in accordance with ANSI/TPI 1 Chapter 2. The Building Designer is responsible for determining that the dimensions and loads for each truss component match those required by the plans and by the actual use of the individual component, and for ascertaining that the loads shown on the drawings meet or exceed applicable building code requirements and any additional factors required in the particular application. Truss components using metal connector plates with integral teeth shall not be placed in environments that will cause the moisture content of the wood in which plates are embedded to exceed 19% and/or cause corrosion of connector plates and other metal fasteners.

The Truss Design Engineer shall not be responsible for items beyond the specific scope of the agreed contracted work set forth herein, including but not limited to: verifying the dimensions of the truss component, calculation of any of the truss component design loads, inspection of the truss components before or after installation, the design of temporary or permanent bracing and their attachment required in the roof and/or floor systems, the design of diaphragms or shear walls, the design of load transfer connections to and from diaphragms and shear walls, the design of load transfer to the foundation, the design of connections for truss components to their bearing supports, the design of the bearing supports, installation of the truss components, observation of the truss component installation process, review of truss assembly procedures, sequencing of the truss component installation, construction means and methods, site and/or worker safety in the installation of the truss components and/or its connections.

This document may be a high quality facsimile of the original engineering document which is a digitally signed electronic file with third party authentication. A wet or embossed seal copy of this engineering document is available upon request.

Temporary Lateral Restraint and Bracing:
Temporary lateral restraint and diagonal bracing shall be installed according to the provisions of BCSI chapters B1, B2, B7 and/or B10 (Building Component Safety Information, by TPI and SBCA), or as specified by the Building Designer or other Registered Design Professional. The required locations for lateral restraint and/or bracing depicted on these drawings are only for the permanent lateral support of the truss members to reduce buckling lengths, and do not apply to and may not be relied upon for the temporary stability of the truss components during their installation.

Permanent Lateral Restraint and Bracing:
The required locations for lateral restraint or bracing depicted on these drawings are for the permanent lateral support of the truss members to reduce buckling lengths. Permanent lateral support shall be installed according to the provisions of BCSI chapters B3, B7 and/or B10, or as specified by the Building Designer or other Registered Design Professional. These drawings do not depict or specify installation/erection bracing, wind bracing, portal bracing or similar building stability bracing which are parts of the overall building design to be specified, designed and detailed by the Building Designer.

Connector Plate Information:
Alpine connector plates are made of ASTM A653 or ASTM A1063 galvanized steel with the following designations, gauges and grades: W=Wave, 20ga, grade 40; H=High Strength, 20ga, grade 60; S=Super Strength, 18ga, grade 60. Information on model code compliance is contained in the ICC Evaluation Service report ESR-1118, available on-line at www.icc-es.org.

Fire Retardant Treated Lumber:
Fire retardant treated lumber must be properly re-dried and maintained below 19% or less moisture level through all stages of construction and usage. Fire retardant treated lumber may be more brittle than untreated lumber. Special handling care must be taken to prevent breakage during all handling activities.

General Notes (continued)

Key to Terms:
Information provided on drawings reflects a summary of the pertinent information required for the truss design. Detailed information on load cases, reactions, member lengths, forces and members requiring permanent lateral support may be found in calculation sheets available upon written request.

BCDL = Bottom Chord standard design Dead Load in pounds per square foot.
BCLL = Bottom Chord standard design Live Load in pounds per square foot.
CL = Certified lumber.
Des Ld = total of TCLL, TCDL, BCLL and BCDL Design Load in pounds per square foot.
FRT = Fire Retardant Treated lumber.
FRT-DB = D-Blaze Fire Retardant Treated lumber.
FRT-DC = Dricon Fire Retardant Treated lumber.
FRT-FP = FirePRO Fire Retardant Treated lumber.
FRT-FL = FlamePRO Fire Retardant Treated lumber.
FRT-FT = FlameTech Fire Retardant Treated lumber.
FRT-PG = PYRO-GUARD Fire Retardant Treated lumber.
g = green lumber.
HORZ(LL) = maximum Horizontal panel point deflection due to Live Load, in inches.
HORZ(TL) = maximum Horizontal panel point long term deflection in inches, due to Total Load, including creep adjustment.
HPL = additional Horizontal Load added to a truss Piece in pounds per linear foot or pounds.
Ic = Incised lumber.
FJ = Finger Jointed lumber.
L/# = user specified divisor for limiting span/deflection ratio for evaluation of actual L/defl value.
L/defl = ratio of Length between bearings, in inches, divided by the vertical Deflection due to creep, in inches, at the referenced panel point. Reported as 999 if greater than or equal to 999.
Loc = Location, starting location of left end of bearing or panel point (joint) location of deflection.
Max BC CSI = Maximum bending and axial Combined Stress Index for Bottom Chords for of all load cases.
Max TC CSI = Maximum bending and axial Combined Stress Index for Top Chords for of all load cases.
Max Web CSI= Maximum bending and axial Combined Stress Index for Webs for of all load cases.
NCBCLL = Non-Concurrent Bottom Chord design Live Load in pounds per square foot.
PL = additional Load applied at a user specified angle on a truss Piece in pounds per linear foot or pounds.
PLB = additional vertical load added to a Bottom chord Piece of a truss in pounds per linear foot or pounds
PLT = additional vertical load added to a Top chord Piece of a truss in pounds per linear foot or pounds.
PP = Panel Point.
R = maximum downward design Reaction, in pounds, from all specified gravity load cases, at the indicated location (Loc).
-R = maximum upward design Reaction, in pounds, from all specified gravity load cases, at the identified location (Loc).
Rh = maximum horizontal design Reaction in either direction, in pounds, from all specified gravity load cases, at the indicated location (Loc).
RL = maximum horizontal design Reaction in either direction, in pounds, from all specified non-gravity (wind or seismic) load cases, at the indicated location (Loc).
Rw = maximum downward design Reaction, in pounds, from all specified non-gravity (wind or seismic) load cases, at the identified location (Loc).
TCDL = Top Chord standard design Dead Load in pounds per square foot.
TCLL = Top Chord standard design Live Load in pounds per square foot.
U = maximum Upward design reaction, in pounds, from all specified non-gravity (wind or seismic) load cases, at the indicated location (Loc).
VERT(CL) = maximum Vertical panel point deflection in inches due to Live Load and Creep Component of Dead Load in inches.
VERT(CTL) = maximum Vertical panel point deflection ratios due to Live Load and Creep Component of Dead Load, and maximum long term Vertical panel point deflection in inches due to Total load, including creep adjustment.
VERT(LL) = maximum Vertical panel point deflection in inches due to Live Load.
VERT(TL) = maximum Vertical panel point long term deflection in inches due to Total load, including creep adjustment.
W = Width of non-hanger bearing, in inches.

Refer to ASCE-7 for Wind and Seismic abbreviations.
Uppercase Acronyms not explained above are as defined in TPI 1.

References:

1. AWC: American Wood Council; 222 Catoctin Circle SE, Suite 201; Leesburg, VA 20175; www.awc.org.
2. ICC: International Code Council; www.iccsafe.org.
3. Alpine, a division of ITW Building Components Group Inc.: 155 Harlem Ave, North Building, 4th Floor, Glenview, IL 60025; www.alpineitw.com.
4. TPI: Truss Plate Institute, 2670 Crain Highway, Suite 203, Waldorf, MD 20601; www.tpinst.org.
5. SBCA: Wood Truss Council of America, 6300 Enterprise Lane, Madison, WI 53719; www. sbcacomponents.com.

SEQN: 656852 HIPS FROM: CDM	Ply: 2 Qty: 1	**Job Number:** 22-7559 Judy Baughn **Truss Label:** A01	Cust: R 215 JRef: 1Xff2150006 T24 DrwNo: 131.22.0817.12267 KD / WHK 05/11/2022

2 Complete Trusses Required

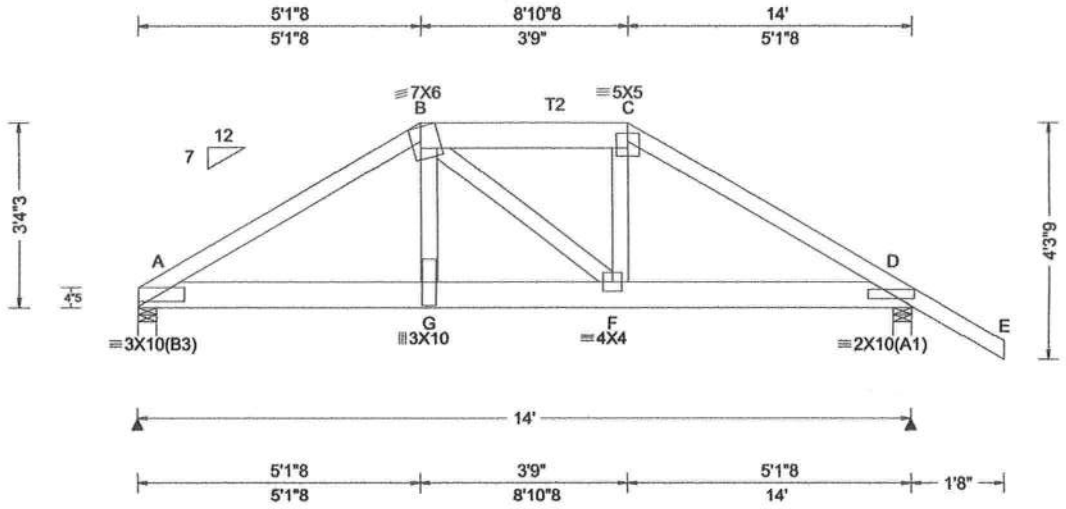

Loading Criteria (psf)

TCLL:	20.00
TCDL:	10.00
BCLL:	0.00
BCDL:	10.00
Des Ld:	40.00
NCBCLL:	10.00
Soffit:	2.00

Load Duration: 1.25
Spacing: 24.0 "

Wind Criteria
Wind Std: ASCE 7-16
Speed: 130 mph
Enclosure: Closed
Risk Category: II
EXP: C Kzt: NA
Mean Height: 15.00 ft
TCDL: 5.0 psf
BCDL: 5.0 psf
MWFRS Parallel Dist: 0 to h/2
C&C Dist a: 3.00 ft
Loc. from endwall: not in 4.50 ft
GCpi: 0.18
Wind Duration: 1.60

Snow Criteria (Pg,Pf in PSF)
Pg: NA Ct: NA CAT: NA
Pf: NA Ce: NA
Lu: NA Cs: NA
Snow Duration: NA

Building Code:
FBC 7th Ed. 2020 Res.
TPI Std: 2014
Rep Fac: Varies by Ld Case
FT/RT:20(0)/10(0)
Plate Type(s):
WAVE

Defl/CSI Criteria

PP Deflection in	loc	L/defl	L/#
VERT(LL): 0.053	G	999	240
VERT(CL): 0.107	G	999	180
HORZ(LL): 0.014	D	-	-
HORZ(TL): 0.027	D	-	-

Creep Factor: 2.0
Max TC CSI: 0.514
Max BC CSI: 0.475
Max Web CSI: 0.738

VIEW Ver: 21.02.01.1214.12

▲ Maximum Reactions (lbs)

Loc	Gravity R+	Gravity / R-	Gravity / Rh	Non-Gravity / Rw	Non-Gravity / U	Non-Gravity / RL
A	4984	/-	/-	/-	/967	/-
D	3095	/-	/-	/-	/697	/-

Wind reactions based on MWFRS
A Brg Wid = 4.0 Min Req = 2.1 (Truss)
D Brg Wid = 4.0 Min Req = 1.5 (Truss)
Bearings A & D are a rigid surface.
Members not listed have forces less than 375#

Maximum Top Chord Forces Per Ply (lbs)

Chords	Tens.	Comp.	Chords	Tens.	Comp.
A - B	737	-3431	C - D	631	-2785
B - C	553	-2493			

Maximum Bot Chord Forces Per Ply (lbs)

Chords	Tens.	Comp.	Chords	Tens.	Comp.
A - G	2957	-630	F - D	2378	-534
G - F	3053	-646			

Maximum Web Forces Per Ply (lbs)

Webs	Tens.	Comp.	Webs	Tens.	Comp.
B - G	1936	-331	F - C	1157	-196
B - F	122	-733			

Lumber
Top chord: 2x4 SP #2; T2 2x6 SP #2;
Bot chord: 2x6 SP 2400f-2.0E;
Webs: 2x4 SP #3;

Nailnote
Nail Schedule:0.131"x3", min. nails
Top Chord: 1 Row @12.00" o.c.
Bot Chord: 1 Row @ 3.25" o.c.
Webs : 1 Row @ 4" o.c.
Use equal spacing between rows and stagger nails in each row to avoid splitting.

Special Loads
-----(Lumber Dur.Fac.=1.25 / Plate Dur.Fac.=1.25)

TC: From	63 plf at	0.00 to	63 plf at	2.93
TC: From	32 plf at	2.93 to	32 plf at	8.87
TC: From	63 plf at	8.87 to	63 plf at	15.66
BC: From	10 plf at	0.00 to	10 plf at	8.84
BC: From	20 plf at	8.84 to	20 plf at	14.00
BC: From	5 plf at	14.00 to	5 plf at	15.66

TC: 209 lb Conc. Load at 5.15, 8.84
TC: 131 lb Conc. Load at 7.00
BC: 1159 lb Conc. Load at 0.93
BC: 1154 lb Conc. Load at 2.93, 4.93
BC: 221 lb Conc. Load at 5.15, 8.84
BC: 2620 lb Conc. Load at 6.93

Purlins
In lieu of structural panels use purlins to brace all flat TC @ 24" oc.

Wind
Wind loads and reactions based on MWFRS.
Wind loading based on both gable and hip roof types.

Additional Notes
The overall height of this truss excluding overhang is 3-4-3.

WILLIAM H. KRICK
LICENSE
No. 70861
STATE OF FLORIDA
PROFESSIONAL ENGINEER

COA #0278
05/11/2022
Florida Certificate of Product Approval #FL 1999

****WARNING**** READ AND FOLLOW ALL NOTES ON THIS DRAWING!
****IMPORTANT**** FURNISH THIS DRAWING TO ALL CONTRACTORS INCLUDING THE INSTALLERS

Trusses require extreme care in fabricating, handling, shipping, installing and bracing. Refer to and follow the latest edition of BCSI (Building Component Safety Information, by TPI and SBCA) for safety practices prior to performing these functions. Installers shall provide temporary bracing per BCSI. Unless noted otherwise, top chord shall have properly attached structural sheathing and bottom chord shall have a properly attached rigid ceiling. Locations shown for permanent lateral restraint of webs shall have bracing installed per BCSI sections B3, B7, or B10, as applicable. Apply plates to each face of truss and position as shown above and on the Joint Details, unless noted otherwise. Refer to drawings 160A-Z for standard plate positions. Refer to job's General Notes page for additional information.

Alpine, a division of ITW Building Components Group Inc. shall not be responsible for any deviation from this drawing, any failure to build the truss in conformance with ANSI/TPI 1, or for handling, shipping, installation and bracing of trusses. A seal on this drawing or cover page listing this drawing, indicates acceptance of professional engineering responsibility solely for the design shown. The suitability and use of this drawing for any structure is the responsibility of the Building Designer per ANSI/TPI 1 Sec.2.

For more information see these web sites: Alpine: alpineitw.com; TPI: tpinst.org; SBCA: sbcacomponents.com; ICC: iccsafe.org; AWC: awc.org

ALPINE
AN ITW COMPANY
155 Harlem Ave
North Building, 4th Floor
Glenview, IL 60025

SEQN: 656904 COMN FROM: CDM	Ply: 1 Qty: 1	**Job Number:** 22-7559 Judy Baughn **Truss Label:** B01	Cust: R 215 JRef: 1Xff2150006 T8 DrwNo: 131.22.0816.09757 KD / WHK 05/11/2022

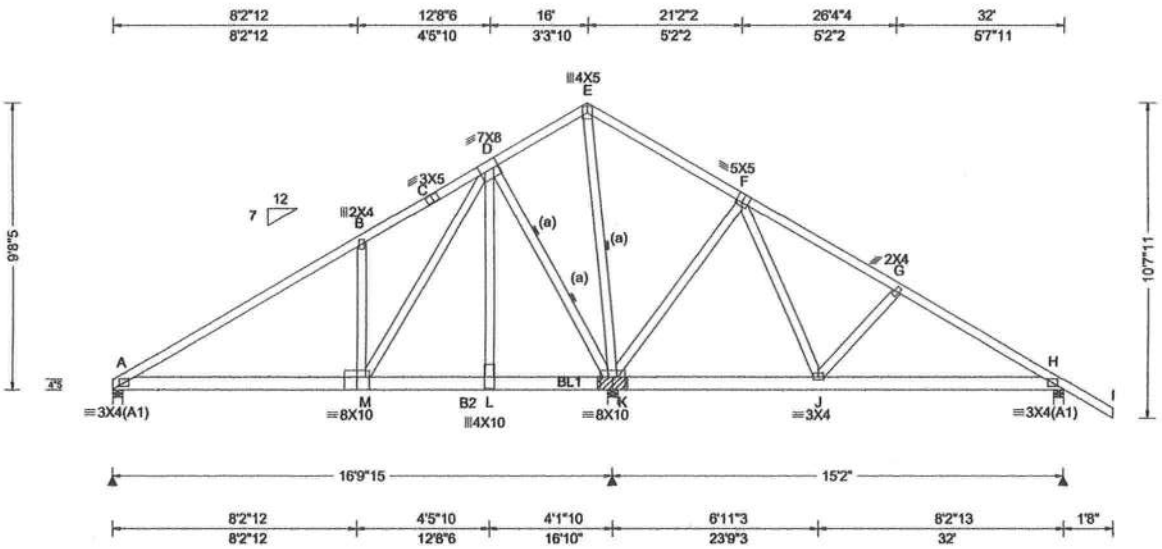

Loading Criteria (psf)	Wind Criteria	Snow Criteria (Pg,Pf in PSF)	Defl/CSI Criteria
TCLL: 20.00 TCDL: 10.00 BCLL: 0.00 BCDL: 10.00 Des Ld: 40.00 NCBCLL: 10.00 Soffit: 2.00 Load Duration: 1.25 Spacing: 24.0 "	Wind Std: ASCE 7-16 Speed: 130 mph Enclosure: Closed Risk Category: II EXP: C Kzt: NA Mean Height: 15.00 ft TCDL: 5.0 psf BCDL: 5.0 psf MWFRS Parallel Dist: 0 to h/2 C&C Dist a: 3.20 ft Loc. from endwall: not in 9.00 ft GCpi: 0.18 Wind Duration: 1.60	Pg: NA Ct: NA CAT: NA Pf: NA Ce: NA Lu: NA Cs: NA Snow Duration: NA Building Code: FBC 7th Ed. 2020 Res. TPI Std: 2014 Rep Fac: Varies by Ld Case FT/RT:20(0)/10(0) Plate Type(s): WAVE	PP Deflection in loc L/defl L/# VERT(LL): 0.048 B 999 240 VERT(CL): 0.099 B 999 180 HORZ(LL): 0.015 A - - HORZ(TL): 0.031 A - - Creep Factor: 2.0 Max TC CSI: 0.900 Max BC CSI: 0.643 Max Web CSI: 0.951 VIEW Ver: 21.02.01.1214.12

▲ Maximum Reactions (lbs)

	Gravity			Non-Gravity		
Loc	R+	/ R-	/ Rh	/ Rw	/ U	/ RL
A	1050	/-	/-	/-	/106	/-
K	4916	/-	/-	/-	/537	/-
H	344	/-91	/-	/-	/97	/-

Wind reactions based on MWFRS
A Brg Wid = 3.9 Min Req = 1.5 (Truss)
K Brg Wid = 4.0 Min Req = -
H Brg Wid = 4.0 Min Req = 1.5 (Truss)
Bearings A, K, & H are a rigid surface.
Members not listed have forces less than 375#

Maximum Top Chord Forces Per Ply (lbs)

Chords	Tens.	Comp.	Chords	Tens.	Comp.
A - B	162	-1664	E - F	1055	-127
B - C	143	-1620	F - G	655	-136
C - D	114	-1543	G - H	575	-213
D - E	915	-101			

Maximum Bot Chord Forces Per Ply (lbs)

Chords	Tens.	Comp.	Chords	Tens.	Comp.
A - M	1337	-101	K - J	22	-619
M - L	753	-60	J - H	167	-466
L - K	778	-59			

Maximum Web Forces Per Ply (lbs)

Webs	Tens.	Comp.	Webs	Tens.	Comp.
B - M	157	-428	E - K	178	-1166
M - D	1157	-112	K - F	113	-543
D - L	2496	-114	F - J	460	0
D - K	225	-2913			

Lumber

Top chord: 2x4 SP #2;
Bot chord: 2x6 SP #2; B2 2x6 SP 2400f-2.0E;
Webs: 2x4 SP #3;

Bracing

(a) Continuous lateral restraint equally spaced on member.

Special Loads

-----(Lumber Dur.Fac.=1.25 / Plate Dur.Fac.=1.25)

TC: From	63 plf at	0.00 to	63 plf at	33.66
BC: From	20 plf at	0.00 to	20 plf at	11.06
BC: From	10 plf at	11.06 to	10 plf at	16.83
BC: From	20 plf at	16.83 to	20 plf at	32.00
BC: From	5 plf at	32.00 to	5 plf at	33.66

BC: 1149 lb Conc. Load at 11.06,13.06
BC: 1144 lb Conc. Load at 14.93

Wind

Wind loads and reactions based on MWFRS.

Wind loading based on both gable and hip roof types.

Bearing Block(s)

Brg blocks:0.131"x3", min. nails

brg	x-loc	#blocks	length/blk	#nails/blk	wall plate
2	16.664'	1	12"	7	Rigid Surface

Brg block to be same size and species as chord.
Refer to drawing CNNAILSP1014 for more information.

Additional Notes

The overall height of this truss excluding overhang is 9-8-5.

WILLIAM H. KRICK
LICENSE
No. 70861
STATE OF FLORIDA
PROFESSIONAL ENGINEER

COA #0278

05/11/2022

Florida Certificate of Product Approval #FL 1999

****WARNING**** READ AND FOLLOW ALL NOTES ON THIS DRAWING!
****IMPORTANT**** FURNISH THIS DRAWING TO ALL CONTRACTORS INCLUDING THE INSTALLERS

Trusses require extreme care in fabricating, handling, shipping, installing and bracing. Refer to and follow the latest edition of BCSI (Building Component Safety Information, by TPI and SBCA) for safety practices prior to performing these functions. Installers shall provide temporary bracing per BCSI. Unless noted otherwise, top chord shall have properly attached structural sheathing and bottom chord shall have a properly attached rigid ceiling. Locations shown for permanent lateral restraint of webs shall have bracing installed per BCSI sections B3, B7, or B10, as applicable. Apply plates to each face of truss and position as shown above and on the Joint Details, unless noted otherwise. Refer to drawings 160A-Z for standard plate positions. Refer to job's General Notes page for additional information.

Alpine, a division of ITW Building Components Group Inc. shall not be responsible for any deviation from this drawing, any failure to build the truss in conformance with ANSI/TPI 1, or for handling, shipping, installation and bracing of trusses. A seal on this drawing or cover page listing this drawing, indicates acceptance of professional engineering responsibility solely for the design shown. The suitability and use of this drawing for any structure is the responsibility of the Building Designer per ANSI/TPI 1 Sec.2.

For more information see these web sites: Alpine: alpineitw.com; TPI: tpinst.org; SBCA: sbcacomponents.com; ICC: iccsafe.org; AWC: awc.org

ALPINE
AN ITW COMPANY
155 Harlem Ave
North Building, 4th Floor
Glenview, IL 60025

SEQN: 656896 COMN	Ply: 1	Job Number: 22-7559	Cust: R 215 JRef: 1Xff2150006 T14
FROM: CDM	Qty: 7	Judy Baughn	DrwNo: 131.22.0815.58500
		Truss Label: B02	KD / WHK 05/11/2022

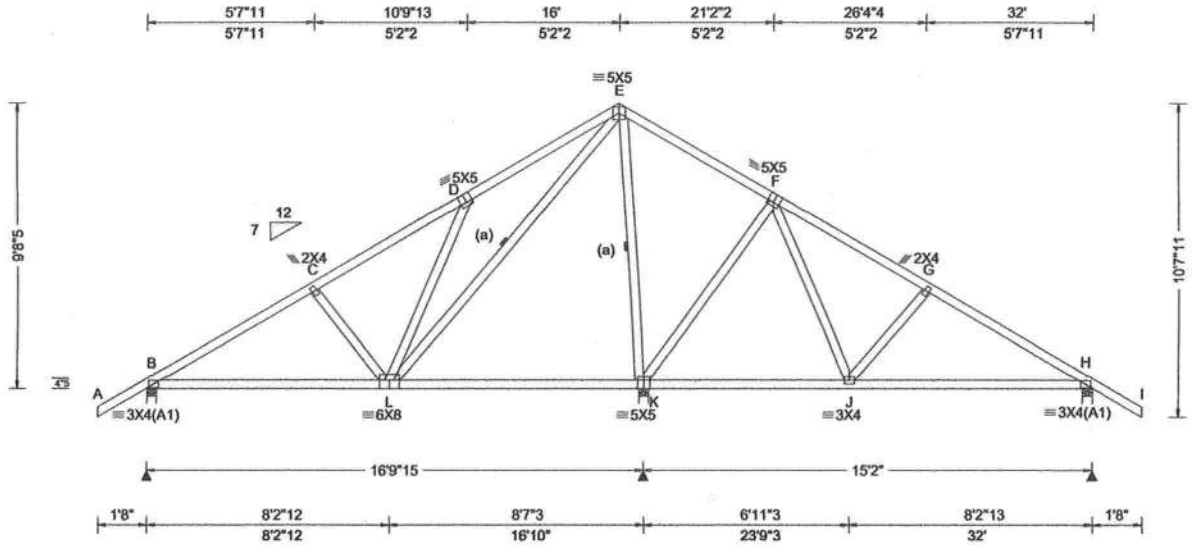

Loading Criteria (psf)

TCLL:	20.00
TCDL:	10.00
BCLL:	0.00
BCDL:	10.00
Des Ld:	40.00
NCBCLL:	10.00
Soffit:	2.00

Load Duration: 1.25
Spacing: 24.0 "

Wind Criteria
Wind Std: ASCE 7-16
Speed: 130 mph
Enclosure: Closed
Risk Category: II
EXP: C Kzt: NA
Mean Height: 15.00 ft
TCDL: 5.0 psf
BCDL: 5.0 psf
MWFRS Parallel Dist: > 2h
C&C Dist a: 3.20 ft
Loc. from endwall: not in 9.00 ft
GCpi: 0.18
Wind Duration: 1.60

Snow Criteria (Pg,Pf in PSF)
Pg: NA Ct: NA CAT: NA
Pf: NA Ce: NA
Lu: NA Cs: NA
Snow Duration: NA

Building Code:
FBC 7th Ed. 2020 Res.
TPI Std: 2014
Rep Fac: Yes
FT/RT:20(0)/10(0)
Plate Type(s):
WAVE

Defl/CSI Criteria

PP Deflection in	loc	L/defl	L/#
VERT(LL): 0.045	D	999	240
VERT(CL): 0.085	D	999	180
HORZ(LL): 0.021	D	-	-
HORZ(TL): 0.039	D	-	-

Creep Factor: 2.0
Max TC CSI: 0.422
Max BC CSI: 0.639
Max Web CSI: 0.744

VIEW Ver: 21.02.01.1214.12

▲ Maximum Reactions (lbs)

Loc	Gravity R+	Gravity / R-	Gravity / Rh	Non-Gravity / Rw	Non-Gravity / U	Non-Gravity / RL
B	694	/-	/-	/424	/17	/292
K	1977	/-	/-	/927	/-	/-
H	605	/-	/-	/426	/53	/-

Wind reactions based on MWFRS
B Brg Wid = 3.9 Min Req = 1.5 (Truss)
K Brg Wid = 4.0 Min Req = 2.3
H Brg Wid = 4.0 Min Req = 1.5 (Truss)
Bearings B, K, & H are a rigid surface.
Members not listed have forces less than 375#

Maximum Top Chord Forces Per Ply (lbs)

Chords	Tens.	Comp.	Chords	Tens.	Comp.
B - C	133	-776	E - F	488	0
C - D	137	-565	G - H	97	-558
D - E	405	-792			

Maximum Bot Chord Forces Per Ply (lbs)

Chords	Tens.	Comp.	Chords	Tens.	Comp.
B - L	608	-208	J - H	417	-8

Maximum Web Forces Per Ply (lbs)

Webs	Tens.	Comp.	Webs	Tens.	Comp.
L - D	305	-498	K - F	227	-602
L - E	1233	-425	F - J	460	-58
E - K	208	-1132			

Lumber
Top chord: 2x4 SP #2;
Bot chord: 2x4 SP #2;
Webs: 2x4 SP #3;

Bracing
(a) Continuous lateral restraint equally spaced on member.

Loading
Truss passed check for 20 psf additional bottom chord live load in areas with 42"-high x 24"-wide clearance.

Wind
Wind loads based on MWFRS with additional C&C member design.
Wind loading based on both gable and hip roof types.

Additional Notes
The overall height of this truss excluding overhang is 9-8-5.

THIS TRUSS MUST BE INSTALLED AS SHOWN AND NOT END FOR END.

WILLIAM H. KRICK
LICENSE
No. 70861
STATE OF FLORIDA
PROFESSIONAL ENGINEER

COA #0278
05/11/2022
Florida Certificate of Product Approval #FL 1999

WARNING READ AND FOLLOW ALL NOTES ON THIS DRAWING!
IMPORTANT FURNISH THIS DRAWING TO ALL CONTRACTORS INCLUDING THE INSTALLERS

Trusses require extreme care in fabricating, handling, shipping, installing and bracing. Refer to and follow the latest edition of BCSI (Building Component Safety Information, by TPI and SBCA) for safety practices prior to performing these functions. Installers shall provide temporary bracing per BCSI. Unless noted otherwise, top chord shall have properly attached structural sheathing and bottom chord shall have a properly attached rigid ceiling. Locations shown for permanent lateral restraint of webs shall have bracing installed per BCSI sections B3, B7, or B10, as applicable. Apply plates to each face of truss and position as shown above and on the Joint Details, unless noted otherwise. Refer to drawings 160A-Z for standard plate positions. Refer to job's General Notes page for additional information.

Alpine, a division of ITW Building Components Group Inc. shall not be responsible for any deviation from this drawing, any failure to build the truss in conformance with ANSI/TPI 1, or for handling, shipping, installation and bracing of trusses. A seal on this drawing or cover page listing this drawing, indicates acceptance of professional engineering responsibility solely for the design shown. The suitability and use of this drawing for any structure is the responsibility of the Building Designer per ANSI/TPI 1 Sec.2.

For more information see these web sites: Alpine: alpineitw.com; TPI: tpinst.org; SBCA: sbcacomponents.com; ICC: iccsafe.org; AWC: awc.org

ALPINE AN ITW COMPANY
155 Harlem Ave
North Building, 4th Floor
Glenview, IL 60025

SEQN: 656941 COMN	Ply: 1	**Job Number:** 22-7559	Cust: R 215 JRef: 1Xff2150006 T16
FROM: CDM	Qty: 3	Judy Baughn	DrwNo: 131.22.0815.46707
		Truss Label: B03	KD / WHK 05/11/2022

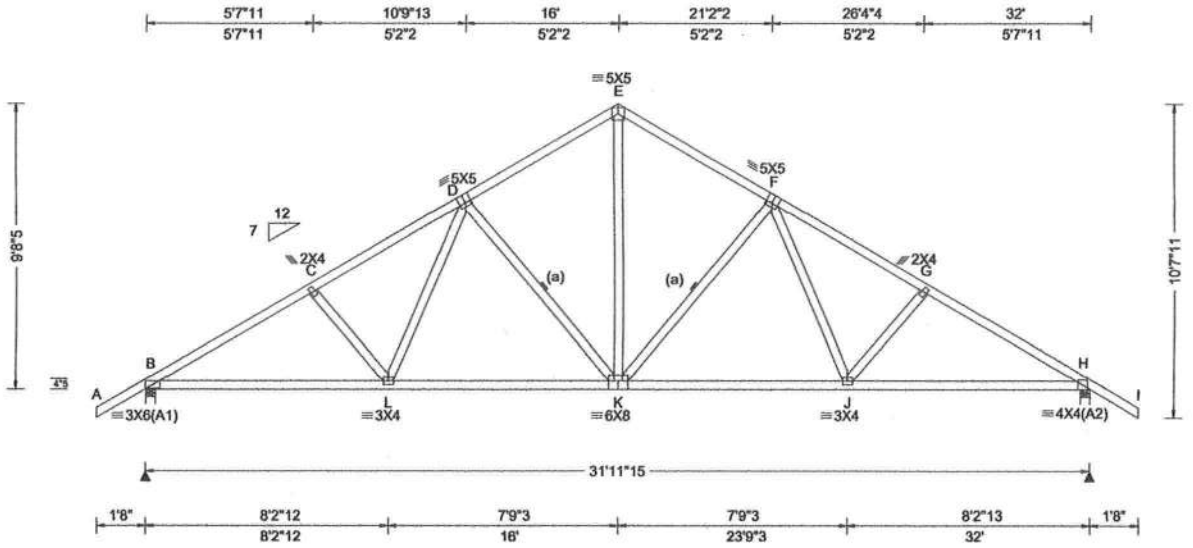

Loading Criteria (psf)

TCLL:	20.00
TCDL:	10.00
BCLL:	0.00
BCDL:	10.00
Des Ld:	40.00
NCBCLL:	10.00
Soffit:	2.00

Load Duration: 1.25
Spacing: 24.0 "

Wind Criteria
Wind Std: ASCE 7-16
Speed: 130 mph
Enclosure: Closed
Risk Category: II
EXP: C Kzt: NA
Mean Height: 15.00 ft
TCDL: 5.0 psf
BCDL: 5.0 psf
MWFRS Parallel Dist: > 2h
C&C Dist a: 3.20 ft
Loc. from endwall: not in 9.00 ft
GCpi: 0.18
Wind Duration: 1.60

Snow Criteria (Pg,Pf in PSF)
Pg: NA Ct: NA CAT: NA
Pf: NA Ce: NA
Lu: NA Cs: NA
Snow Duration: NA

Building Code:
FBC 7th Ed. 2020 Res.
TPI Std: 2014
Rep Fac: Yes
FT/RT:20(0)/10(0)
Plate Type(s):
WAVE

Defl/CSI Criteria

PP Deflection in	loc	L/defl	L/#
VERT(LL): 0.095	K	999	240
VERT(CL): 0.195	K	999	180
HORZ(LL): 0.042	H	-	-
HORZ(TL): 0.086	H	-	-

Creep Factor: 2.0
Max TC CSI: 0.361
Max BC CSI: 0.758
Max Web CSI: 0.407

VIEW Ver: 21.02.01.1214.12

▲ Maximum Reactions (lbs)

	Gravity			Non-Gravity		
Loc	R+	/ R-	/ Rh	/ Rw	/ U	/ RL
B	1437	/-	/-	/861	/10	/292
H	1450	/-	/-	/867	/10	/-

Wind reactions based on MWFRS
B Brg Wid = 3.9 Min Req = 1.7 (Truss)
H Brg Wid = 4.0 Min Req = 1.7 (Truss)
Bearings B & H are a rigid surface.
Members not listed have forces less than 375#

Maximum Top Chord Forces Per Ply (lbs)

Chords	Tens.	Comp.	Chords	Tens.	Comp.
B - C	425	-2209	E - F	383	-1401
C - D	430	-1998	F - G	423	-1963
D - E	383	-1401	G - H	418	-2169

Maximum Bot Chord Forces Per Ply (lbs)

Chords	Tens.	Comp.	Chords	Tens.	Comp.
B - L	1844	-249	K - J	1482	-127
L - K	1493	-127	J - H	1798	-249

Maximum Web Forces Per Ply (lbs)

Webs	Tens.	Comp.	Webs	Tens.	Comp.
L - D	470	-55	K - F	204	-537
D - K	208	-556	F - J	440	-47
E - K	996	-241			

Lumber

Top chord: 2x4 SP #2;
Bot chord: 2x4 SP #2;
Webs: 2x4 SP #3;

Bracing

(a) Continuous lateral restraint equally spaced on member.

Wind

Wind loads based on MWFRS with additional C&C member design.

Wind loading based on both gable and hip roof types.

Additional Notes

The overall height of this truss excluding overhang is 9-8-5.

WILLIAM H. KRICK
LICENSE
No. 70861
STATE OF FLORIDA
PROFESSIONAL ENGINEER

COA #0278

06/11/2022

Florida Certificate of Product Approval #FL 1999

****WARNING**** READ AND FOLLOW ALL NOTES ON THIS DRAWING!
****IMPORTANT**** FURNISH THIS DRAWING TO ALL CONTRACTORS INCLUDING THE INSTALLERS

Trusses require extreme care in fabricating, handling, shipping, installing and bracing. Refer to and follow the latest edition of BCSI (Building Component Safety Information, by TPI and SBCA) for safety practices prior to performing these functions. Installers shall provide temporary bracing per BCSI. Unless noted otherwise, top chord shall have properly attached structural sheathing and bottom chord shall have a properly attached rigid ceiling. Locations shown for permanent lateral restraint of webs shall have bracing installed per BCSI sections B3, B7, or B10, as applicable. Apply plates to each face of truss and position as shown above and on the Joint Details, unless noted otherwise. Refer to drawings 160A-Z for standard plate positions. Refer to job's General Notes page for additional information.

Alpine, a division of ITW Building Components Group Inc. shall not be responsible for any deviation from this drawing, any failure to build the truss in conformance with ANSI/TPI 1, or for handling, shipping, installation and bracing of trusses. A seal on this drawing or cover page listing this drawing, indicates acceptance of professional engineering responsibility solely for the design shown. The suitability and use of this drawing for any structure is the responsibility of the Building Designer per ANSI/TPI 1 Sec.2.

For more information see these web sites: Alpine: alpineitw.com; TPI: tpinst.org; SBCA: sbcacomponents.com; ICC: iccsafe.org; AWC: awc.org

ALPINE
AN ITW COMPANY
155 Harlem Ave
North Building, 4th Floor
Glenview, IL 60025

SEQN: 656943 COMN	Ply: 1	**Job Number:** 22-7559	Cust: R 215 JRef: 1Xff2150006 T17
FROM: CDM	Qty: 5	Judy Baughn	DrwNo: 131.22.0815.44870
		Truss Label: B04	KD / WHK 05/11/2022

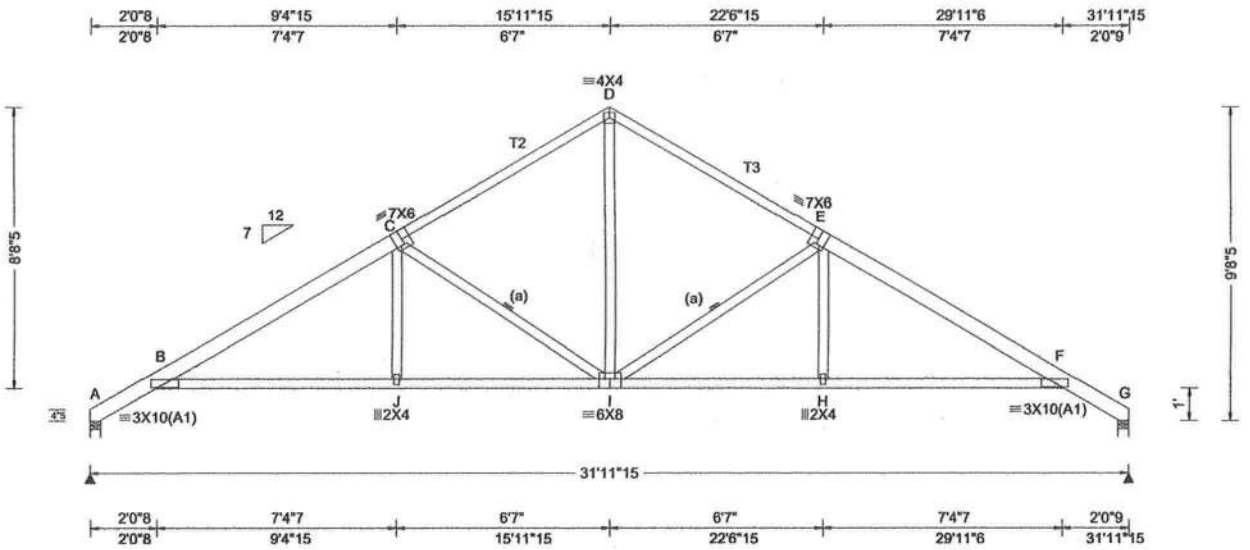

Loading Criteria (psf)

TCLL:	20.00
TCDL:	10.00
BCLL:	0.00
BCDL:	10.00
Des Ld:	40.00
NCBCLL:	10.00
Soffit:	2.00

Load Duration: 1.25
Spacing: 24.0 "

Wind Criteria
Wind Std: ASCE 7-16
Speed: 130 mph
Enclosure: Closed
Risk Category: II
EXP: C Kzt: NA
Mean Height: 15.00 ft
TCDL: 5.0 psf
BCDL: 5.0 psf
MWFRS Parallel Dist: > 2h
C&C Dist a: 3.20 ft
Loc. from endwall: not in 9.00 ft
GCpi: 0.18
Wind Duration: 1.60

Snow Criteria (Pg,Pf in PSF)
Pg: NA Ct: NA CAT: NA
Pf: NA Ce: NA
Lu: NA Cs: NA
Snow Duration: NA

Building Code:
FBC 7th Ed. 2020 Res.
TPI Std: 2014
Rep Fac: Yes
FT/RT:20(0)/10(0)
Plate Type(s):
WAVE

Defl/CSI Criteria

PP Deflection in	loc	L/defl	L/#
VERT(LL): 0.437	I	862	240
VERT(CL): 0.880	I	428	180
HORZ(LL): 0.252	F	-	-
HORZ(TL): 0.508	F	-	-

Creep Factor: 2.0
Max TC CSI: 0.802
Max BC CSI: 0.830
Max Web CSI: 0.435

VIEW Ver: 21.02.01.1214.12

▲ Maximum Reactions (lbs)

Loc	Gravity R+	Gravity / R-	Gravity / Rh	Non-Gravity / Rw	Non-Gravity / U	Non-Gravity / RL
A	1289	/-	/-	/729	/19	/242
G	1290	/-	/-	/730	/19	/-

Wind reactions based on MWFRS
A Brg Wid = 3.9 Min Req = 1.5 (Truss)
G Brg Wid = 4.0 Min Req = 1.5 (Truss)
Bearings A & G are a rigid surface.
Members not listed have forces less than 375#

Maximum Top Chord Forces Per Ply (lbs)

Chords	Tens.	Comp.	Chords	Tens.	Comp.
A - B	144	-640	D - E	391	-1568
B - C	411	-2227	E - F	411	-2227
C - D	391	-1568	F - G	144	-640

Maximum Bot Chord Forces Per Ply (lbs)

Chords	Tens.	Comp.	Chords	Tens.	Comp.
B - J	1975	-249	I - H	1971	-250
J - I	1971	-250	H - F	1975	-249

Maximum Web Forces Per Ply (lbs)

Webs	Tens.	Comp.	Webs	Tens.	Comp.
C - I	251	-890	I - E	251	-890
D - I	1142	-231			

Lumber

Top chord: 2x6 SP 2400f-2.0E; T2,T3 2x4 SP #2;
Bot chord: 2x4 SP #2;
Webs: 2x4 SP #3;

Bracing

(a) Continuous lateral restraint equally spaced on member.

Wind

Wind loads based on MWFRS with additional C&C member design.

Wind loading based on both gable and hip roof types.

Additional Notes

The overall height of this truss excluding overhang is 9-8-5.

COA #0278
06/11/2022
Florida Certificate of Product Approval #FL 1999

****WARNING**** READ AND FOLLOW ALL NOTES ON THIS DRAWING!
****IMPORTANT**** FURNISH THIS DRAWING TO ALL CONTRACTORS INCLUDING THE INSTALLERS

Trusses require extreme care in fabricating, handling, shipping, installing and bracing. Refer to and follow the latest edition of BCSI (Building Component Safety Information, by TPI and SBCA) for safety practices prior to performing these functions. Installers shall provide temporary bracing per BCSI. Unless noted otherwise, top chord shall have properly attached structural sheathing and bottom chord shall have a properly attached rigid ceiling. Locations shown for permanent lateral restraint of webs shall have bracing installed per BCSI sections B3, B7, or B10, as applicable. Apply plates to each face of truss and position as shown above and on the Joint Details, unless noted otherwise. Refer to drawings 160A-Z for standard plate positions. Refer to job's General Notes page for additional information.

Alpine, a division of ITW Building Components Group Inc. shall not be responsible for any deviation from this drawing, any failure to build the truss in conformance with ANSI/TPI 1, or for handling, shipping, installation and bracing of trusses. A seal on this drawing or cover page listing this drawing, indicates acceptance of professional engineering responsibility solely for the design shown. The suitability and use of this drawing for any structure is the responsibility of the Building Designer per ANSI/TPI 1 Sec.2.

For more information see these web sites: Alpine: alpineitw.com; TPI: tpinst.org; SBCA: sbcacomponents.com; ICC: iccsafe.org; AWC: awc.org

ALPINE
AN ITW COMPANY
155 Harlem Ave
North Building, 4th Floor
Glenview, IL 60025

SEQN: 656939 COMN FROM: CDM	Ply: 1 Qty: 1	**Job Number:** 22-7559 Judy Baughn **Truss Label:** B05		Cust: R 215 JRef: 1Xff2150006 T1 DrwNo: 131.22.0815.16527 KD / WHK 05/11/2022

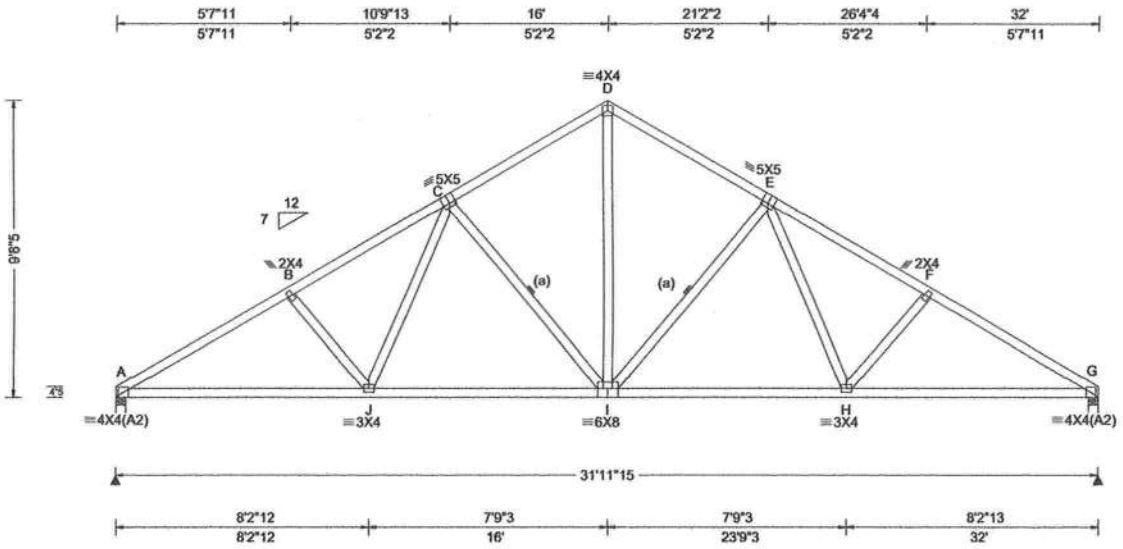

Loading Criteria (psf)

TCLL:	20.00
TCDL:	10.00
BCLL:	0.00
BCDL:	10.00
Des Ld:	40.00
NCBCLL:	10.00
Soffit:	2.00

Load Duration: 1.25
Spacing: 24.0 "

Wind Criteria
Wind Std: ASCE 7-16
Speed: 130 mph
Enclosure: Closed
Risk Category: II
EXP: C Kzt: NA
Mean Height: 15.00 ft
TCDL: 5.0 psf
BCDL: 5.0 psf
MWFRS Parallel Dist: h to 2h
C&C Dist a: 3.20 ft
Loc. from endwall: not in 9.00 ft
GCpi: 0.18
Wind Duration: 1.60

Snow Criteria (Pg,Pf in PSF)
Pg: NA Ct: NA CAT: NA
Pf: NA Ce: NA
Lu: NA Cs: NA
Snow Duration: NA

Building Code:
FBC 7th Ed. 2020 Res.
TPI Std: 2014
Rep Fac: Yes
FT/RT:20(0)/10(0)
Plate Type(s):
WAVE

Defl/CSI Criteria

PP Deflection in	loc	L/defl	L/#
VERT(LL): 0.093	I	999	240
VERT(CL): 0.194	I	999	180
HORZ(LL): 0.042	G	-	-
HORZ(TL): 0.087	G	-	-

Creep Factor: 2.0
Max TC CSI: 0.411
Max BC CSI: 0.772
Max Web CSI: 0.418

VIEW Ver: 21.02.01.1214.12

▲ Maximum Reactions (lbs)

	Gravity			Non-Gravity		
Loc	R+	/ R-	/ Rh	/ Rw	/ U	/ RL
A	1324	/-	/-	/765	/16	/242
G	1336	/-	/-	/772	/16	/-

Wind reactions based on MWFRS
A Brg Wid = 3.9 Min Req = 1.6 (Truss)
G Brg Wid = 4.0 Min Req = 1.6 (Truss)
Bearings A & G are a rigid surface.
Members not listed have forces less than 375#

Maximum Top Chord Forces Per Ply (lbs)

Chords	Tens.	Comp.	Chords	Tens.	Comp.
A - B	443	-2240	D - E	391	-1413
B - C	446	-2027	E - F	440	-1995
C - D	390	-1412	F - G	436	-2203

Maximum Bot Chord Forces Per Ply (lbs)

Chords	Tens.	Comp.	Chords	Tens.	Comp.
A - J	1877	-310	I - H	1498	-172
J - I	1509	-174	H - G	1835	-303

Maximum Web Forces Per Ply (lbs)

Webs	Tens.	Comp.	Webs	Tens.	Comp.
J - C	479	-65	I - E	209	-547
C - I	212	-564	E - H	449	-58
D - I	1006	-247			

Lumber

Top chord: 2x4 SP #2;
Bot chord: 2x4 SP #2;
Webs: 2x4 SP #3;

Bracing

(a) Continuous lateral restraint equally spaced on member.

Wind

Wind loads based on MWFRS with additional C&C member design.

Wind loading based on both gable and hip roof types.

Additional Notes

The overall height of this truss excluding overhang is 9-8-5.

WILLIAM H. KRICK
LICENSE
No. 70861
STATE OF FLORIDA
PROFESSIONAL ENGINEER

COA #0278

Florida Certificate of Product Approval #FL 1999

06/11/2022

****WARNING**** READ AND FOLLOW ALL NOTES ON THIS DRAWING!
****IMPORTANT**** FURNISH THIS DRAWING TO ALL CONTRACTORS INCLUDING THE INSTALLERS

Trusses require extreme care in fabricating, handling, shipping, installing and bracing. Refer to and follow the latest edition of BCSI (Building Component Safety Information, by TPI and SBCA) for safety practices prior to performing these functions. Installers shall provide temporary bracing per BCSI. Unless noted otherwise, top chord shall have properly attached structural sheathing and bottom chord shall have a properly attached rigid ceiling. Locations shown for permanent lateral restraint of webs shall have bracing installed per BCSI sections B3, B7, or B10, as applicable. Apply plates to each face of truss and position as shown above and on the Joint Details, unless noted otherwise. Refer to drawings 160A-Z for standard plate positions. Refer to job's General Notes page for additional information.

Alpine, a division of ITW Building Components Group Inc. shall not be responsible for any deviation from this drawing, any failure to build the truss in conformance with ANSI/TPI 1, or for handling, shipping, installation and bracing of trusses. A seal on this drawing or cover page listing this drawing, indicates acceptance of professional engineering responsibility solely for the design shown. The suitability and use of this drawing for any structure is the responsibility of the Building Designer per ANSI/TPI 1 Sec.2.

For more information see these web sites: Alpine: alpineitw.com; TPI: tpinst.org; SBCA: sbcacomponents.com; ICC: iccsafe.org; AWC: awc.org

ALPINE
AN ITW COMPANY
155 Harlem Ave
North Building, 4th Floor
Glenview, IL 60025

SEQN: 656886 HIPS	Ply: 1	Job Number: 22-7559	Cust: R 215 JRef: 1Xff2150006 T23
FROM: CDM	Qty: 1	Judy Baughn	DrwNo: 131.22.0815.14730
		Truss Label: C01	KD / WHK 05/11/2022

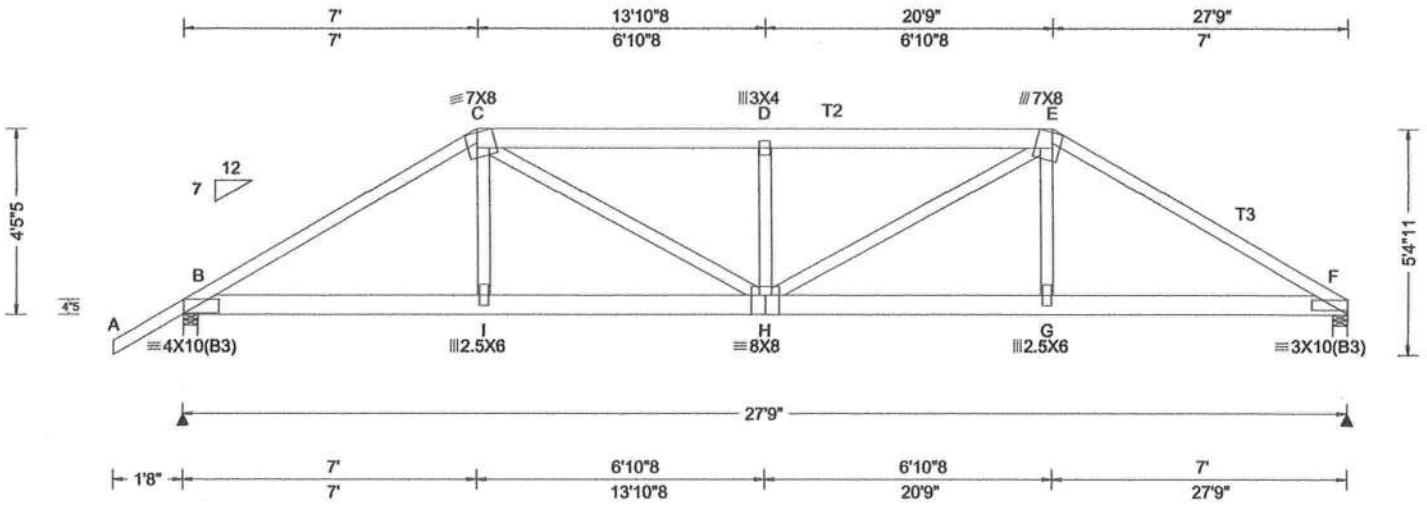

Loading Criteria (psf)

TCLL:	20.00
TCDL:	10.00
BCLL:	0.00
BCDL:	10.00
Des Ld:	40.00
NCBCLL:	10.00
Soffit:	2.00

Load Duration: 1.25
Spacing: 24.0 "

Wind Criteria
Wind Std: ASCE 7-16
Speed: 130 mph
Enclosure: Closed
Risk Category: II
EXP: C Kzt: NA
Mean Height: 15.00 ft
TCDL: 5.0 psf
BCDL: 5.0 psf
MWFRS Parallel Dist: 0 to h/2
C&C Dist a: 3.00 ft
Loc. from endwall: not in 4.50 ft
GCpi: 0.18
Wind Duration: 1.60

Snow Criteria (Pg,Pf in PSF)
Pg: NA Ct: NA CAT: NA
Pf: NA Ce: NA
Lu: NA Cs: NA
Snow Duration: NA

Building Code:
FBC 7th Ed. 2020 Res.
TPI Std: 2014
Rep Fac: Varies by Ld Case
FT/RT:20(0)/10(0)
Plate Type(s):
WAVE

Defl/CSI Criteria

PP Deflection in	loc	L/defl	L/#
VERT(LL): 0.164	D	999	240
VERT(CL): 0.332	D	993	180
HORZ(LL): 0.049	F	-	-
HORZ(TL): 0.100	F	-	-

Creep Factor: 2.0
Max TC CSI: 0.919
Max BC CSI: 0.899
Max Web CSI: 0.531

VIEW Ver: 21.02.01.1214.12

▲ Maximum Reactions (lbs)

Loc	Gravity R+	Gravity /R-	Gravity /Rh	Non-Gravity /Rw	Non-Gravity /U	Non-Gravity /RL
B	2488	/-	/-	/-	/673	/-
F	2242	/-	/-	/-	/651	/-

Wind reactions based on MWFRS
B Brg Wid = 4.0 Min Req = 2.9 (Truss)
F Brg Wid = 4.0 Min Req = 2.6 (Truss)
Bearings B & F are a rigid surface.
Members not listed have forces less than 375#

Maximum Top Chord Forces Per Ply (lbs)

Chords	Tens.	Comp.	Chords	Tens.	Comp.
B - C	1180	-4254	D - E	1399	-4609
C - D	1399	-4610	E - F	1248	-3999

Maximum Bot Chord Forces Per Ply (lbs)

Chords	Tens.	Comp.	Chords	Tens.	Comp.
B - I	3602	-992	H - G	3403	-1053
I - H	3628	-991	G - F	3378	-1049

Maximum Web Forces Per Ply (lbs)

Webs	Tens.	Comp.	Webs	Tens.	Comp.
C - I	725	0	H - E	1395	-400
C - H	1134	-471	G - E	682	-103
D - H	468	-799			

Lumber

Top chord: 2x4 SP #2; T2 2x6 SP #2;
T3 2x4 SP M-31;
Bot chord: 2x6 SP #2;
Webs: 2x4 SP #3;

Special Loads

-----(Lumber Dur.Fac.=1.25 / Plate Dur.Fac.=1.25)

TC: From	63 plf at	-1.67 to	63 plf at	7.00
TC: From	32 plf at	7.00 to	32 plf at	20.75
TC: From	63 plf at	20.75 to	63 plf at	27.75
BC: From	5 plf at	-1.67 to	5 plf at	0.00
BC: From	20 plf at	0.00 to	20 plf at	7.03
BC: From	10 plf at	7.03 to	10 plf at	20.72
BC: From	20 plf at	20.72 to	20 plf at	27.75

TC: 268 lb Conc. Load at 7.03
TC: 188 lb Conc. Load at 9.06,11.06,13.06,14.69
TC: 5 lb Conc. Load at 16.69,18.69
TC: 270 lb Conc. Load at 20.72
BC: 456 lb Conc. Load at 7.03
BC: 129 lb Conc. Load at 9.06,11.06,13.06,14.69
BC: 64 lb Conc. Load at 16.69,18.69
BC: 479 lb Conc. Load at 20.72

Purlins

In lieu of structural panels use purlins to brace all flat TC @ 24" oc.

Wind

Wind loads and reactions based on MWFRS.
Wind loading based on both gable and hip roof types.

Additional Notes

The overall height of this truss excluding overhang is 4-5-5.

WILLIAM H. KRICK
LICENSE
No. 70861
STATE OF FLORIDA
PROFESSIONAL ENGINEER

COA #0278
06/11/2022
Florida Certificate of Product Approval #FL 1999

****WARNING**** READ AND FOLLOW ALL NOTES ON THIS DRAWING!
****IMPORTANT**** FURNISH THIS DRAWING TO ALL CONTRACTORS INCLUDING THE INSTALLERS

Trusses require extreme care in fabricating, handling, shipping, installing and bracing. Refer to and follow the latest edition of BCSI (Building Component Safety Information, by TPI and SBCA) for safety practices prior to performing these functions. Installers shall provide temporary bracing per BCSI. Unless noted otherwise, top chord shall have properly attached structural sheathing and bottom chord shall have a properly attached rigid ceiling. Locations shown for permanent lateral restraint of webs shall have bracing installed per BCSI sections B3, B7, or B10, as applicable. Apply plates to each face of truss and position as shown above and on the Joint Details, unless noted otherwise. Refer to drawings 160A-Z for standard plate positions. Refer to job's General Notes page for additional information.

Alpine, a division of ITW Building Components Group Inc. shall not be responsible for any deviation from this drawing, any failure to build the truss in conformance with ANSI/TPI 1, or for handling, shipping, installation and bracing of trusses. A seal on this drawing or cover page listing this drawing, indicates acceptance of professional engineering responsibility solely for the design shown. The suitability and use of this drawing for any structure is the responsibility of the Building Designer per ANSI/TPI 1 Sec.2.

For more information see these web sites: Alpine: alpineitw.com; TPI: tpinst.org; SBCA: sbcacomponents.com; ICC: iccsafe.org; AWC: awc.org

ALPINE
AN ITW COMPANY
155 Harlem Ave
North Building, 4th Floor
Glenview, IL 60025

SEQN: 656870 HIPS FROM: CDM	Ply: 1 Qty: 1	**Job Number:** 22-7559 Judy Baughn **Truss Label:** C02	Cust: R 215 JRef: 1Xff2150006 T19 DrwNo: 131.22.0814.57893 KD / WHK 05/11/2022

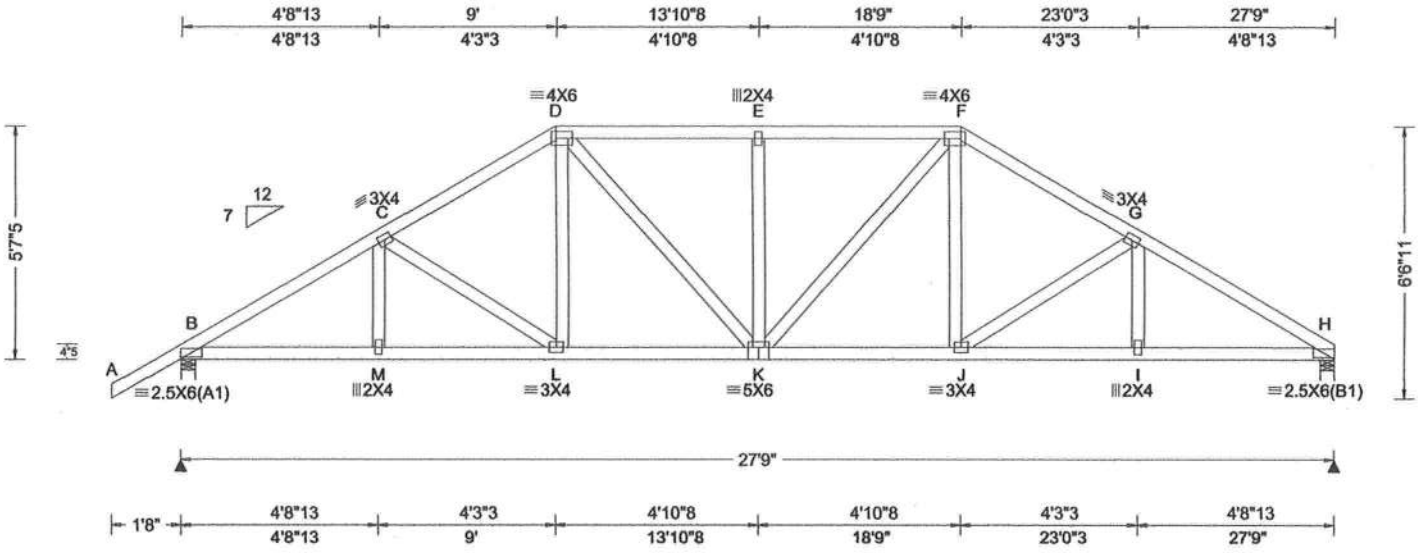

Loading Criteria (psf)

TCLL:	20.00
TCDL:	10.00
BCLL:	0.00
BCDL:	10.00
Des Ld:	40.00
NCBCLL:	10.00
Soffit:	2.00

Load Duration: 1.25
Spacing: 24.0 "

Wind Criteria
Wind Std: ASCE 7-16
Speed: 130 mph
Enclosure: Closed
Risk Category: II
EXP: C Kzt: NA
Mean Height: 15.00 ft
TCDL: 5.0 psf
BCDL: 5.0 psf
MWFRS Parallel Dist: h/2 to h
C&C Dist a: 3.00 ft
Loc. from endwall: not in 9.00 ft
GCpi: 0.18
Wind Duration: 1.60

Snow Criteria (Pg,Pf in PSF)
Pg: NA Ct: NA CAT: NA
Pf: NA Ce: NA
Lu: NA Cs: NA
Snow Duration: NA

Building Code:
FBC 7th Ed. 2020 Res.
TPI Std: 2014
Rep Fac: Yes
FT/RT:20(0)/10(0)
Plate Type(s):
WAVE

Defl/CSI Criteria

PP Deflection in	loc	L/defl	L/#
VERT(LL): 0.073	E	999	240
VERT(CL): 0.150	E	999	180
HORZ(LL): 0.032	H	-	-
HORZ(TL): 0.065	H	-	-

Creep Factor: 2.0
Max TC CSI: 0.330
Max BC CSI: 0.548
Max Web CSI: 0.198

VIEW Ver: 21.02.01.1214.12

▲ Maximum Reactions (lbs)

	Gravity			Non-Gravity		
Loc	R+	/ R-	/ Rh	/ Rw	/ U	/ RL
B	1271	/-	/-	/753	/227	/166
H	1150	/-	/-	/657	/196	/-

Wind reactions based on MWFRS
B Brg Wid = 4.0 Min Req = 1.5 (Truss)
H Brg Wid = 4.0 Min Req = 1.5 (Truss)
Bearings B & H are a rigid surface.
Members not listed have forces less than 375#

Maximum Top Chord Forces Per Ply (lbs)

Chords	Tens.	Comp.	Chords	Tens.	Comp.
B - C	659	- 1860	E - F	746	- 1494
C - D	676	- 1572	F - G	683	- 1582
D - E	746	- 1494	G - H	677	- 1893

Maximum Bot Chord Forces Per Ply (lbs)

Chords	Tens.	Comp.	Chords	Tens.	Comp.
B - M	1536	- 500	K - J	1309	- 435
M - L	1535	- 501	J - I	1571	- 520
L - K	1302	- 434	I - H	1572	- 519

Lumber

Top chord: 2x4 SP #2;
Bot chord: 2x4 SP #2;
Webs: 2x4 SP #3;

Purlins

In lieu of structural panels use purlins to brace all flat TC @ 24" oc.

Wind

Wind loads based on MWFRS with additional C&C member design.

Wind loading based on both gable and hip roof types.

Additional Notes

The overall height of this truss excluding overhang is 5-7-5.

WILLIAM H. KRICK
LICENSE
No. 70861
STATE OF FLORIDA
PROFESSIONAL ENGINEER

COA #0278

05/11/2022

Florida Certificate of Product Approval #FL 1999

****WARNING**** READ AND FOLLOW ALL NOTES ON THIS DRAWING!
****IMPORTANT**** FURNISH THIS DRAWING TO ALL CONTRACTORS INCLUDING THE INSTALLERS

Trusses require extreme care in fabricating, handling, shipping, installing and bracing. Refer to and follow the latest edition of BCSI (Building Component Safety Information, by TPI and SBCA) for safety practices prior to performing these functions. Installers shall provide temporary bracing per BCSI. Unless noted otherwise, top chord shall have properly attached structural sheathing and bottom chord shall have a properly attached rigid ceiling. Locations shown for permanent lateral restraint of webs shall have bracing installed per BCSI sections B3, B7, or B10, as applicable. Apply plates to each face of truss and position as shown above and on the Joint Details, unless noted otherwise. Refer to drawings 160A-Z for standard plate positions. Refer to job's General Notes page for additional information.

Alpine, a division of ITW Building Components Group Inc. shall not be responsible for any deviation from this drawing, any failure to build the truss in conformance with ANSI/TPI 1, or for handling, shipping, installation and bracing of trusses. A seal on this drawing or cover page listing this drawing, indicates acceptance of professional engineering responsibility solely for the design shown. The suitability and use of this drawing for any structure is the responsibility of the Building Designer per ANSI/TPI 1 Sec.2.

For more information see these web sites: Alpine: alpineitw.com; TPI: tpinst.org; SBCA: sbcacomponents.com; ICC: iccsafe.org; AWC: awc.org

ALPINE AN ITW COMPANY
155 Harlem Ave
North Building, 4th Floor
Glenview, IL 60025

SEQN: 656867 HIPS FROM: CDM	Ply: 1 Qty: 1	**Job Number:** 22-7559 Judy Baughn **Truss Label:** C03	Cust: R 215 JRef: 1Xff2150006 T20 DrwNo: 131.22.0814.55547 KD / WHK 05/11/2022

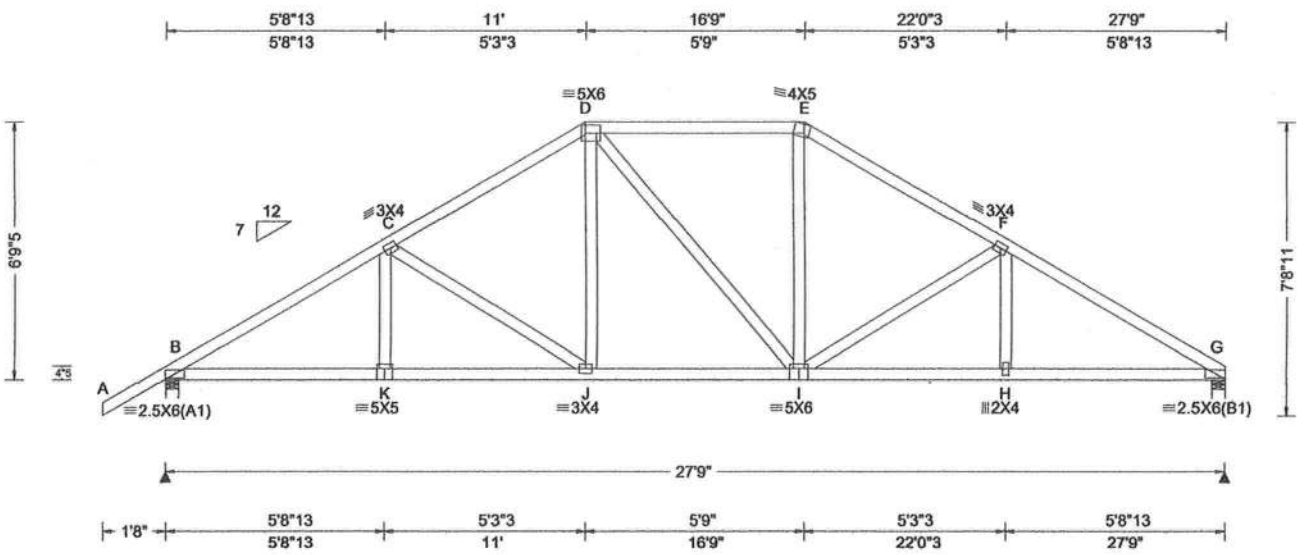

Loading Criteria (psf)

TCLL:	20.00
TCDL:	10.00
BCLL:	0.00
BCDL:	10.00
Des Ld:	40.00
NCBCLL:	10.00
Soffit:	2.00

Load Duration: 1.25
Spacing: 24.0 "

Wind Criteria
Wind Std: ASCE 7-16
Speed: 130 mph
Enclosure: Closed
Risk Category: II
EXP: C Kzt: NA
Mean Height: 15.00 ft
TCDL: 5.0 psf
BCDL: 5.0 psf
MWFRS Parallel Dist: h/2 to h
C&C Dist a: 3.00 ft
Loc. from endwall: not in 9.00 ft
GCpi: 0.18
Wind Duration: 1.60

Snow Criteria (Pg,Pf in PSF)
Pg: NA Ct: NA CAT: NA
Pf: NA Ce: NA
Lu: NA Cs: NA
Snow Duration: NA

Building Code:
FBC 7th Ed. 2020 Res.
TPI Std: 2014
Rep Fac: Yes
FT/RT:20(0)/10(0)
Plate Type(s):
WAVE

Defl/CSI Criteria

PP Deflection in	loc	L/defl	L/#
VERT(LL): 0.064	J	999	240
VERT(CL): 0.132	J	999	180
HORZ(LL): 0.031	G	-	-
HORZ(TL): 0.064	G	-	-

Creep Factor: 2.0
Max TC CSI: 0.354
Max BC CSI: 0.452
Max Web CSI: 0.336

VIEW Ver: 21.02.01.1214.12

▲ Maximum Reactions (lbs)

Loc	Gravity R+	Gravity / R-	Non-Gravity / Rh	Non-Gravity / Rw	Non-Gravity / U	Non-Gravity / RL
B	1271	/-	/-	/759	/224	/196
G	1150	/-	/-	/663	/193	/-

Wind reactions based on MWFRS
B Brg Wid = 4.0 Min Req = 1.5 (Truss)
G Brg Wid = 4.0 Min Req = 1.5 (Truss)
Bearings B & G are a rigid surface.
Members not listed have forces less than 375#

Maximum Top Chord Forces Per Ply (lbs)

Chords	Tens.	Comp.	Chords	Tens.	Comp.
B - C	534	-1841	E - F	539	-1443
C - D	538	-1446	F - G	545	-1867
D - E	511	-1181			

Maximum Bot Chord Forces Per Ply (lbs)

Chords	Tens.	Comp.	Chords	Tens.	Comp.
B - K	1513	-382	I - H	1539	-395
K - J	1511	-383	H - G	1541	-394
J - I	1177	-276			

Maximum Web Forces Per Ply (lbs)

Webs	Tens.	Comp.	Webs	Tens.	Comp.
C - J	142	-399	I - E	395	-26
D - J	393	-24	I - F	151	-434

Lumber
Top chord: 2x4 SP #2;
Bot chord: 2x4 SP #2;
Webs: 2x4 SP #3;

Purlins
In lieu of structural panels use purlins to brace all flat TC @ 24" oc.

Wind
Wind loads based on MWFRS with additional C&C member design.
Wind loading based on both gable and hip roof types.

Additional Notes
The overall height of this truss excluding overhang is 6-9-5.

WILLIAM H. KRICK
LICENSE
No. 70861
STATE OF FLORIDA
PROFESSIONAL ENGINEER

COA #0278
05/11/2022
Florida Certificate of Product Approval #FL 1999

****WARNING**** READ AND FOLLOW ALL NOTES ON THIS DRAWING!
****IMPORTANT**** FURNISH THIS DRAWING TO ALL CONTRACTORS INCLUDING THE INSTALLERS

Trusses require extreme care in fabricating, handling, shipping, installing and bracing. Refer to and follow the latest edition of BCSI (Building Component Safety Information, by TPI and SBCA) for safety practices prior to performing these functions. Installers shall provide temporary bracing per BCSI. Unless noted otherwise, top chord shall have properly attached structural sheathing and bottom chord shall have a properly attached rigid ceiling. Locations shown for permanent lateral restraint of webs shall have bracing installed per BCSI sections B3, B7, or B10, as applicable. Apply plates to each face of truss and position as shown above and on the Joint Details, unless noted otherwise. Refer to drawings 160A-Z for standard plate positions. Refer to job's General Notes page for additional information.

Alpine, a division of ITW Building Components Group Inc. shall not be responsible for any deviation from this drawing, any failure to build the truss in conformance with ANSI/TPI 1, or for handling, shipping, installation and bracing of trusses. A seal on this drawing or cover page listing this drawing, indicates acceptance of professional engineering responsibility solely for the design shown. The suitability and use of this drawing for any structure is the responsibility of the Building Designer per ANSI/TPI 1 Sec.2.

For more information see these web sites: Alpine: alpineitw.com; TPI: tpinst.org; SBCA: sbcacomponents.com; ICC: iccsafe.org; AWC: awc.org

ALPINE
AN ITW COMPANY
155 Harlem Ave
North Building, 4th Floor
Glenview, IL 60025

SEQN: 656864 HIPS FROM: CDM	Ply: 1 Qty: 1	**Job Number:** 22-7559 Judy Baughn **Truss Label:** C04		Cust: R 215 JRef: 1Xff2150006 T21 DrwNo: 131.22.0814.53603 KD / WHK 05/11/2022

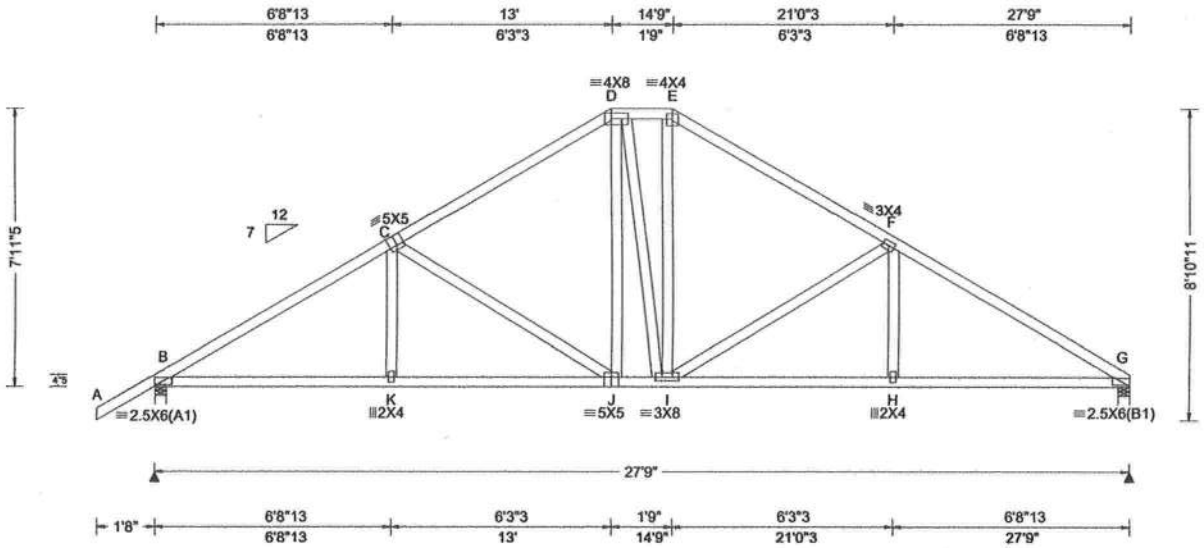

Loading Criteria (psf)

TCLL:	20.00
TCDL:	10.00
BCLL:	0.00
BCDL:	10.00
Des Ld:	40.00
NCBCLL:	10.00
Soffit:	2.00

Load Duration: 1.25
Spacing: 24.0 "

Wind Criteria
Wind Std: ASCE 7-16
Speed: 130 mph
Enclosure: Closed
Risk Category: II
EXP: C Kzt: NA
Mean Height: 15.00 ft
TCDL: 5.0 psf
BCDL: 5.0 psf
MWFRS Parallel Dist: h/2 to h
C&C Dist a: 3.00 ft
Loc. from endwall: not in 9.00 ft
GCpi: 0.18
Wind Duration: 1.60

Snow Criteria (Pg,Pf in PSF)
Pg: NA Ct: NA CAT: NA
Pf: NA Ce: NA
Lu: NA Cs: NA
Snow Duration: NA

Building Code:
FBC 7th Ed. 2020 Res.
TPI Std: 2014
Rep Fac: Yes
FT/RT:20(0)/10(0)
Plate Type(s):
WAVE

Defl/CSI Criteria

PP Deflection in	loc	L/defl	L/#
VERT(LL): 0.064	J	999	240
VERT(CL): 0.131	J	999	180
HORZ(LL): 0.031	G	-	-
HORZ(TL): 0.064	G	-	-

Creep Factor: 2.0
Max TC CSI: 0.486
Max BC CSI: 0.530
Max Web CSI: 0.606

VIEW Ver: 21.02.01.1214.12

▲ Maximum Reactions (lbs)

	Gravity			Non-Gravity		
Loc	R+	/ R-	/ Rh	/ Rw	/ U	/ RL
B	1271	/-	/-	/760	/221	/226
G	1150	/-	/-	/664	/189	/-

Wind reactions based on MWFRS
B Brg Wid = 4.0 Min Req = 1.5 (Truss)
G Brg Wid = 4.0 Min Req = 1.5 (Truss)
Bearings B & G are a rigid surface.
Members not listed have forces less than 375#

Maximum Top Chord Forces Per Ply (lbs)

Chords	Tens.	Comp.	Chords	Tens.	Comp.
B - C	401	-1817	E - F	387	-1302
C - D	388	-1306	F - G	410	-1837
D - E	381	-1037			

Maximum Bot Chord Forces Per Ply (lbs)

Chords	Tens.	Comp.	Chords	Tens.	Comp.
B - K	1484	-257	I - H	1504	-269
K - J	1481	-258	H - G	1507	-268
J - I	1035	-104			

Maximum Web Forces Per Ply (lbs)

Webs	Tens.	Comp.	Webs	Tens.	Comp.
C - J	183	-532	I - F	197	-560

Lumber
Top chord: 2x4 SP #2;
Bot chord: 2x4 SP #2;
Webs: 2x4 SP #3;

Purlins
In lieu of structural panels use purlins to brace all flat TC @ 24" oc.

Wind
Wind loads based on MWFRS with additional C&C member design.
Wind loading based on both gable and hip roof types.

Additional Notes
The overall height of this truss excluding overhang is 7-11-5.

WILLIAM H. KRICK
LICENSE
No. 70861
STATE OF FLORIDA
PROFESSIONAL ENGINEER

COA #0278
06/11/2022
Florida Certificate of Product Approval #FL 1999

****WARNING**** READ AND FOLLOW ALL NOTES ON THIS DRAWING!
****IMPORTANT**** FURNISH THIS DRAWING TO ALL CONTRACTORS INCLUDING THE INSTALLERS

Trusses require extreme care in fabricating, handling, shipping, installing and bracing. Refer to and follow the latest edition of BCSI (Building Component Safety Information, by TPI and SBCA) for safety practices prior to performing these functions. Installers shall provide temporary bracing per BCSI. Unless noted otherwise, top chord shall have properly attached structural sheathing and bottom chord shall have a properly attached rigid ceiling. Locations shown for permanent lateral restraint of webs shall have bracing installed per BCSI sections B3, B7, or B10, as applicable. Apply plates to each face of truss and position as shown above and on the Joint Details, unless noted otherwise. Refer to drawings 160A-Z for standard plate positions. Refer to job's General Notes page for additional information.

Alpine, a division of ITW Building Components Group Inc. shall not be responsible for any deviation from this drawing, any failure to build the truss in conformance with ANSI/TPI 1, or for handling, shipping, installation and bracing of trusses. A seal on this drawing or cover page listing this drawing, indicates acceptance of professional engineering responsibility solely for the design shown. The suitability and use of this drawing for any structure is the responsibility of the Building Designer per ANSI/TPI 1 Sec.2.

For more Information see these web sites: Alpine: alpineitw.com; TPI: tpinst.org; SBCA: sbcacomponents.com; ICC: iccsafe.org; AWC: awc.org

ALPINE
AN ITW COMPANY
155 Harlem Ave
North Building, 4th Floor
Glenview, IL 60025

SEQN: 656861 COMN FROM: CDM	Ply: 1 Qty: 2	**Job Number:** 22-7559 Judy Baughn **Truss Label:** C05	Cust: R 215 JRef: 1Xff2150006 T22 DrwNo: 131.22.0814.51437 KD / WHK 05/11/2022

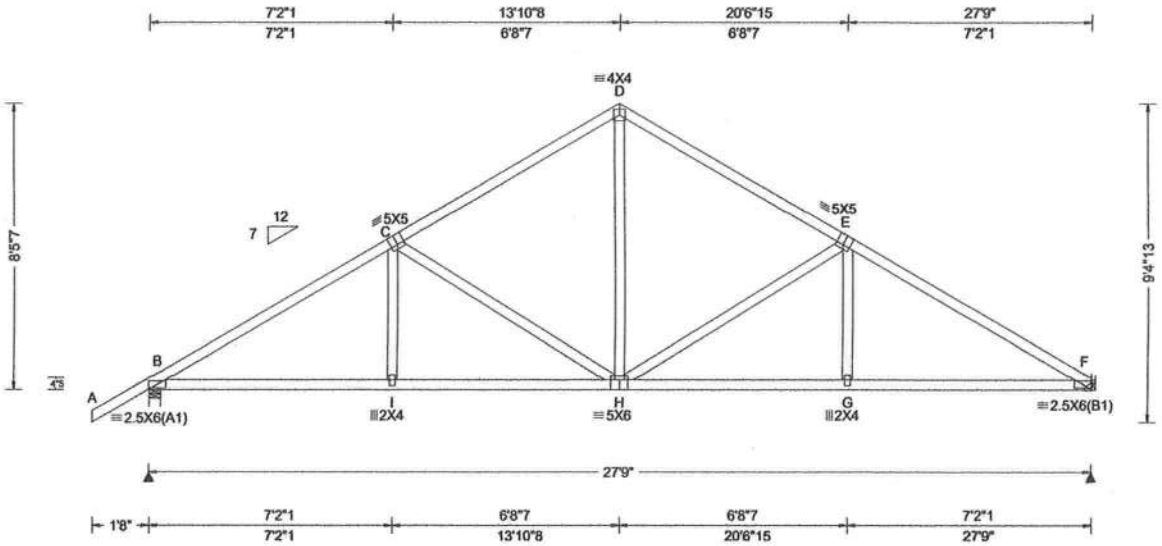

Loading Criteria (psf)

TCLL:	20.00
TCDL:	10.00
BCLL:	0.00
BCDL:	10.00
Des Ld:	40.00
NCBCLL:	10.00
Soffit:	2.00

Load Duration: 1.25
Spacing: 24.0 "

Wind Criteria
Wind Std: ASCE 7-16
Speed: 130 mph
Enclosure: Closed
Risk Category: II
EXP: C Kzt: NA
Mean Height: 15.00 ft
TCDL: 5.0 psf
BCDL: 5.0 psf
MWFRS Parallel Dist: h to 2h
C&C Dist a: 3.00 ft
Loc. from endwall: not in 9.00 ft
GCpi: 0.18
Wind Duration: 1.60

Snow Criteria (Pg,Pf in PSF)
Pg: NA Ct: NA CAT: NA
Pf: NA Ce: NA
Lu: NA Cs: NA
Snow Duration: NA

Building Code:
FBC 7th Ed. 2020 Res.
TPI Std: 2014
Rep Fac: Yes
FT/RT:20(0)/10(0)
Plate Type(s):
WAVE

Defl/CSI Criteria

PP Deflection in	loc	L/defl	L/#
VERT(LL): 0.064	H	999	240
VERT(CL): 0.132	H	999	180
HORZ(LL): 0.031	F	-	-
HORZ(TL): 0.064	F	-	-

Creep Factor: 2.0
Max TC CSI: 0.547
Max BC CSI: 0.579
Max Web CSI: 0.703

VIEW Ver: 21.02.01.1214.12

▲Maximum Reactions (lbs)

Loc	Gravity R+	Gravity / R-	/ Rh	Non-Gravity / Rw	/ U	/ RL
B	1272	/-	/-	/759	/21	/239
F	1149	/-	/-	/663	/13	/-

Wind reactions based on MWFRS
B Brg Wid = 4.0 Min Req = 1.5 (Truss)
F Brg Wid = - Min Req = -
Bearing B is a rigid surface.
Members not listed have forces less than 375#

Maximum Top Chord Forces Per Ply (lbs)

Chords	Tens.	Comp.	Chords	Tens.	Comp.
B - C	340	-1801	D - E	324	-1256
C - D	323	-1255	E - F	349	-1822

Maximum Bot Chord Forces Per Ply (lbs)

Chords	Tens.	Comp.	Chords	Tens.	Comp.
B - I	1464	-199	H - G	1485	-210
I - H	1462	-200	G - F	1488	-209

Maximum Web Forces Per Ply (lbs)

Webs	Tens.	Comp.	Webs	Tens.	Comp.
C - H	196	-561	H - E	207	-589
D - H	752	-149			

Lumber
Top chord: 2x4 SP #2;
Bot chord: 2x4 SP #2;
Webs: 2x4 SP #3;

Hangers / Ties
(J) Hanger Support Required, by others

Wind
Wind loads based on MWFRS with additional C&C member design.
Wind loading based on both gable and hip roof types.

Additional Notes
The overall height of this truss excluding overhang is 8-5-7.

WILLIAM H. KRICK
LICENSE
No. 70861
STATE OF FLORIDA
PROFESSIONAL ENGINEER

COA #0278
05/11/2022
Florida Certificate of Product Approval #FL 1999

****WARNING**** READ AND FOLLOW ALL NOTES ON THIS DRAWING!
****IMPORTANT**** FURNISH THIS DRAWING TO ALL CONTRACTORS INCLUDING THE INSTALLERS

Trusses require extreme care in fabricating, handling, shipping, installing and bracing. Refer to and follow the latest edition of BCSI (Building Component Safety Information, by TPI and SBCA) for safety practices prior to performing these functions. Installers shall provide temporary bracing per BCSI. Unless noted otherwise, top chord shall have properly attached structural sheathing and bottom chord shall have a properly attached rigid ceiling. Locations shown for permanent lateral restraint of webs shall have bracing installed per BCSI sections B3, B7, or B10, as applicable. Apply plates to each face of truss and position as shown above and on the Joint Details, unless noted otherwise. Refer to drawings 160A-Z for standard plate positions. Refer to job's General Notes page for additional information.

Alpine, a division of ITW Building Components Group Inc. shall not be responsible for any deviation from this drawing, any failure to build the truss in conformance with ANSI/TPI 1, or for handling, shipping, installation and bracing of trusses. A seal on this drawing or cover page listing this drawing, indicates acceptance of professional engineering responsibility solely for the design shown. The suitability and use of this drawing for any structure is the responsibility of the Building Designer per ANSI/TPI 1 Sec.2.

For more information see these web sites: Alpine: alpineitw.com; TPI: tpinst.org; SBCA: sbcacomponents.com; ICC: iccsafe.org; AWC: awc.org

ALPINE
AN ITW COMPANY
155 Harlem Ave
North Building, 4th Floor
Glenview, IL 60025

SEQN: 656858 HIPM FROM: CDM	Ply: 1 Qty: 1	**Job Number:** 22-7559 Judy Baughn **Truss Label:** C06	Cust: R 215 JRef: 1Xff2150006 T28 DrwNo: 131.22.0814.49760 KD / WHK 05/11/2022	

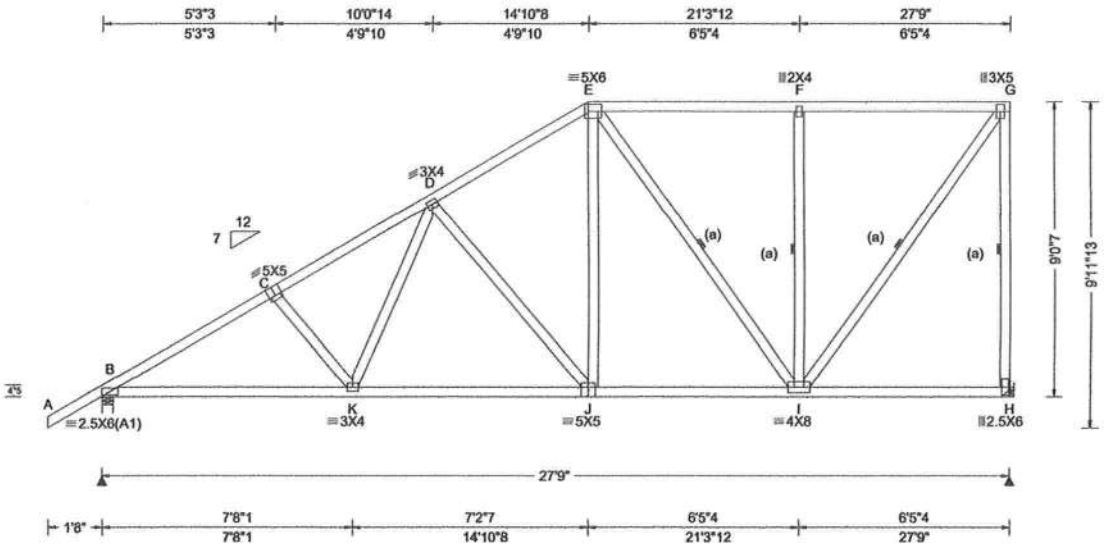

Loading Criteria (psf)		Wind Criteria	Snow Criteria (Pg,Pf in PSF)	Defl/CSI Criteria	
TCLL:	20.00	Wind Std: ASCE 7-16	Pg: NA Ct: NA CAT: NA	PP Deflection in loc L/defl L/#	
TCDL:	10.00	Speed: 130 mph	Pf: NA Ce: NA	VERT(LL): 0.059 D 999 240	
BCLL:	0.00	Enclosure: Closed	Lu: NA Cs: NA	VERT(CL): 0.122 D 999 180	
BCDL:	10.00	Risk Category: II	Snow Duration: NA	HORZ(LL): 0.021 H - -	
Des Ld:	40.00	EXP: C Kzt: NA		HORZ(TL): 0.043 H - -	
NCBCLL:	10.00	Mean Height: 15.00 ft	Building Code:	Creep Factor: 2.0	
Soffit:	2.00	TCDL: 5.0 psf	FBC 7th Ed. 2020 Res.	Max TC CSI: 0.727	
Load Duration: 1.25		BCDL: 5.0 psf	TPI Std: 2014	Max BC CSI: 0.609	
Spacing: 24.0 "		MWFRS Parallel Dist: h to 2h	Rep Fac: Yes	Max Web CSI: 0.569	
		C&C Dist a: 3.00 ft	FT/RT:20(0)/10(0)		
		Loc. from endwall: not in 9.00 ft	Plate Type(s):		
		GCpi: 0.18	WAVE	VIEW Ver: 21.02.01.1214.12	
		Wind Duration: 1.60			

▲ Maximum Reactions (lbs)

	Gravity			Non-Gravity		
Loc	R+	/ R-	/ Rh	/ Rw	/ U	/ RL
B	1277	/-	/-	/817	/69	/242
H	1144	/-	/-	/641	/204	/-

Wind reactions based on MWFRS
B Brg Wid = 4.0 Min Req = 1.5 (Truss)
H Brg Wid = - Min Req = -
Bearing B is a rigid surface.
Members not listed have forces less than 375#

Maximum Top Chord Forces Per Ply (lbs)

Chords	Tens.	Comp.	Chords	Tens.	Comp.
B - C	449	-1852	E - F	348	-687
C - D	455	-1662	F - G	348	-687
D - E	435	-1143			

Maximum Bot Chord Forces Per Ply (lbs)

Chords	Tens.	Comp.	Chords	Tens.	Comp.
B - K	1528	-629	J - I	921	-420
K - J	1239	-529			

Maximum Web Forces Per Ply (lbs)

Webs	Tens.	Comp.	Webs	Tens.	Comp.
K - D	411	-36	F - I	452	-473
D - J	178	-498	I - G	1158	-587
E - J	535	-75	G - H	620	-1092
E - I	121	-395			

Lumber

Top chord: 2x4 SP #2;
Bot chord: 2x4 SP #2;
Webs: 2x4 SP #3;

Bracing

(a) Continuous lateral restraint equally spaced on member.

Hangers / Ties

(J) Hanger Support Required, by others

Purlins

In lieu of structural panels use purlins to brace all flat TC @ 24" oc.

Wind

Wind loads based on MWFRS with additional C&C member design.

Right end vertical not exposed to wind pressure.

Wind loading based on both gable and hip roof types.

Additional Notes

The overall height of this truss excluding overhang is 9-0-7.

WILLIAM H. KRICK
LICENSE
No. 70861
STATE OF FLORIDA
PROFESSIONAL ENGINEER

COA #0278

05/11/2022

Florida Certificate of Product Approval #FL 1999

****WARNING**** READ AND FOLLOW ALL NOTES ON THIS DRAWING!
****IMPORTANT**** FURNISH THIS DRAWING TO ALL CONTRACTORS INCLUDING THE INSTALLERS

Trusses require extreme care in fabricating, handling, shipping, installing and bracing. Refer to and follow the latest edition of BCSI (Building Component Safety Information, by TPI and SBCA) for safety practices prior to performing these functions. Installers shall provide temporary bracing per BCSI. Unless noted otherwise, top chord shall have properly attached structural sheathing and bottom chord shall have a properly attached rigid ceiling. Locations shown for permanent lateral restraint of webs shall have bracing installed per BCSI sections B3, B7, or B10, as applicable. Apply plates to each face of truss and position as shown above and on the Joint Details, unless noted otherwise. Refer to drawings 160A-Z for standard plate positions. Refer to job's General Notes page for additional information.

Alpine, a division of ITW Building Components Group Inc. shall not be responsible for any deviation from this drawing, any failure to build the truss in conformance with ANSI/TPI 1, or for handling, shipping, installation and bracing of trusses. A seal on this drawing or cover page listing this drawing, indicates acceptance of professional engineering responsibility solely for the design shown. The suitability and use of this drawing for any structure is the responsibility of the Building Designer per ANSI/TPI 1 Sec.2.

For more information see these web sites: Alpine: alpineitw.com; TPI: tpinst.org; SBCA: sbcacomponents.com; ICC: iccsafe.org; AWC: awc.org

ALPINE
AN ITW COMPANY
155 Harlem Ave
North Building, 4th Floor
Glenview, IL 60025

SEQN: 656855 HIPM FROM: CDM	Ply: 1 Qty: 1	**Job Number:** 22-7559 Judy Baughn **Truss Label:** C07		Cust: R 215 JRef: 1Xff2150006 T27 DrwNo: 131.22.0814.47757 KD / WHK 05/11/2022

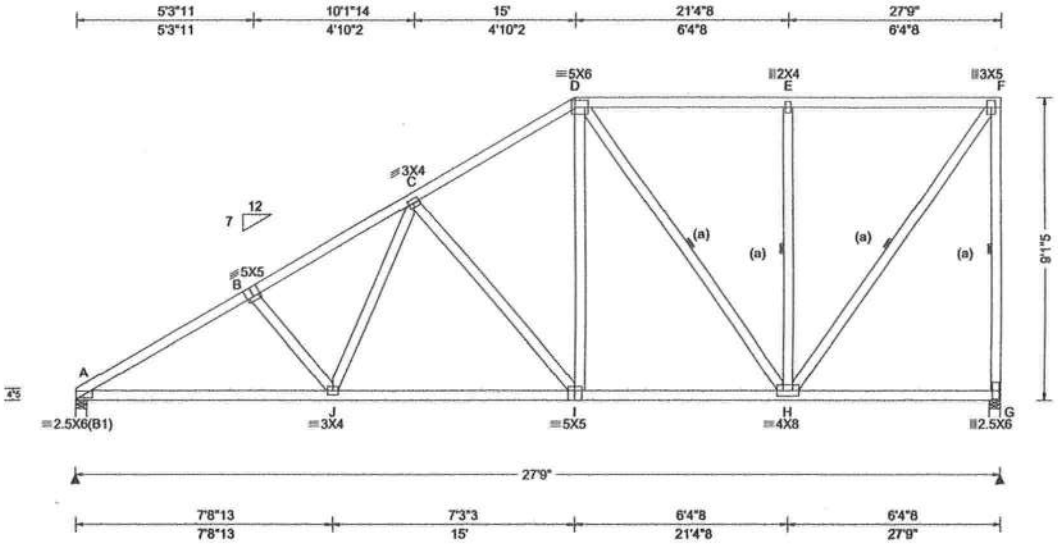

Loading Criteria (psf)

TCLL:	20.00
TCDL:	10.00
BCLL:	0.00
BCDL:	10.00
Des Ld:	40.00
NCBCLL:	10.00
Soffit:	2.00

Load Duration: 1.25
Spacing: 24.0 "

Wind Criteria
Wind Std: ASCE 7-16
Speed: 130 mph
Enclosure: Closed
Risk Category: II
EXP: C Kzt: NA
Mean Height: 15.00 ft
TCDL: 5.0 psf
BCDL: 5.0 psf
MWFRS Parallel Dist: h to 2h
C&C Dist a: 3.00 ft
Loc. from endwall: not in 9.00 ft
GCpi: 0.18
Wind Duration: 1.60

Snow Criteria (Pg,Pf in PSF)
Pg: NA Ct: NA CAT: NA
Pf: NA Ce: NA
Lu: NA Cs: NA
Snow Duration: NA

Building Code:
FBC 7th Ed. 2020 Res.
TPI Std: 2014
Rep Fac: Yes
FT/RT:20(0)/10(0)
Plate Type(s):
WAVE

Defl/CSI Criteria

PP Deflection in	loc	L/defl	L/#
VERT(LL): 0.058	C	999	240
VERT(CL): 0.121	C	999	180
HORZ(LL): 0.020	G	-	-
HORZ(TL): 0.043	G	-	-

Creep Factor: 2.0
Max TC CSI: 0.710
Max BC CSI: 0.632
Max Web CSI: 0.597

VIEW Ver: 21.02.01.1214.12

▲ Maximum Reactions (lbs)

	Gravity			Non-Gravity		
Loc	R+	/ R-	/ Rh	/ Rw	/ U	/ RL
A	1160	/-	/-	/722	/55	/225
G	1148	/-	/-	/646	/204	/-

Wind reactions based on MWFRS
A Brg Wid = 4.0 Min Req = 1.5 (Truss)
G Brg Wid = 4.0 Min Req = 1.5 (Truss)
Bearings A & G are a rigid surface.
Members not listed have forces less than 375#

Maximum Top Chord Forces Per Ply (lbs)

Chords	Tens.	Comp.	Chords	Tens.	Comp.
A - B	469	-1880	D - E	345	-679
B - C	474	-1686	E - F	344	-679
C - D	435	-1140			

Maximum Bot Chord Forces Per Ply (lbs)

Chords	Tens.	Comp.	Chords	Tens.	Comp.
A - J	1560	-654	I - H	918	-420
J - I	1246	-536			

Maximum Web Forces Per Ply (lbs)

Webs	Tens.	Comp.	Webs	Tens.	Comp.
J - C	426	-48	E - H	448	-467
C - I	185	-514	H - F	1158	-588
D - I	541	-79	F - G	620	-1096
D - H	128	-408			

Lumber

Top chord: 2x4 SP #2;
Bot chord: 2x4 SP #2;
Webs: 2x4 SP #3;

Bracing

(a) Continuous lateral restraint equally spaced on member.

Purlins

In lieu of structural panels use purlins to brace all flat TC @ 24" oc.

Wind

Wind loads based on MWFRS with additional C&C member design.

Right end vertical not exposed to wind pressure.

Wind loading based on both gable and hip roof types.

Additional Notes

The overall height of this truss excluding overhang is 9-1-5.

WILLIAM H. KRICK
LICENSE
No. 70861
STATE OF FLORIDA
PROFESSIONAL ENGINEER

COA #0278

06/11/2022

Florida Certificate of Product Approval #FL 1999

****WARNING**** READ AND FOLLOW ALL NOTES ON THIS DRAWING!
****IMPORTANT**** FURNISH THIS DRAWING TO ALL CONTRACTORS INCLUDING THE INSTALLERS

Trusses require extreme care in fabricating, handling, shipping, installing and bracing. Refer to and follow the latest edition of BCSI (Building Component Safety Information, by TPI and SBCA) for safety practices prior to performing these functions. Installers shall provide temporary bracing per BCSI. Unless noted otherwise, top chord shall have properly attached structural sheathing and bottom chord shall have a properly attached rigid ceiling. Locations shown for permanent lateral restraint of webs shall have bracing installed per BCSI sections B3, B7, or B10, as applicable. Apply plates to each face of truss and position as shown above and on the Joint Details, unless noted otherwise. Refer to drawings 160A-Z for standard plate positions. Refer to job's General Notes page for additional information.

Alpine, a division of ITW Building Components Group Inc. shall not be responsible for any deviation from this drawing, any failure to build the truss in conformance with ANSI/TPI 1, or for handling, shipping, installation and bracing of trusses. A seal on this drawing or cover page listing this drawing, indicates acceptance of professional engineering responsibility solely for the design shown. The suitability and use of this drawing for any structure is the responsibility of the Building Designer per ANSI/TPI 1 Sec.2.

For more information see these web sites: Alpine: alpineitw.com; TPI: tpinst.org; SBCA: sbcacomponents.com; ICC: iccsafe.org; AWC: awc.org

ALPINE AN ITW COMPANY
155 Harlem Ave
North Building, 4th Floor
Glenview, IL 60025

SEQN: 656849 HIPM FROM: CDM	Ply: 1 Qty: 1	**Job Number:** 22-7559 Judy Baughn **Truss Label:** C08	Cust: R 215 JRef: 1Xff2150006 T26 DrwNo: 131.22.0814.45207 KD / WHK 05/11/2022

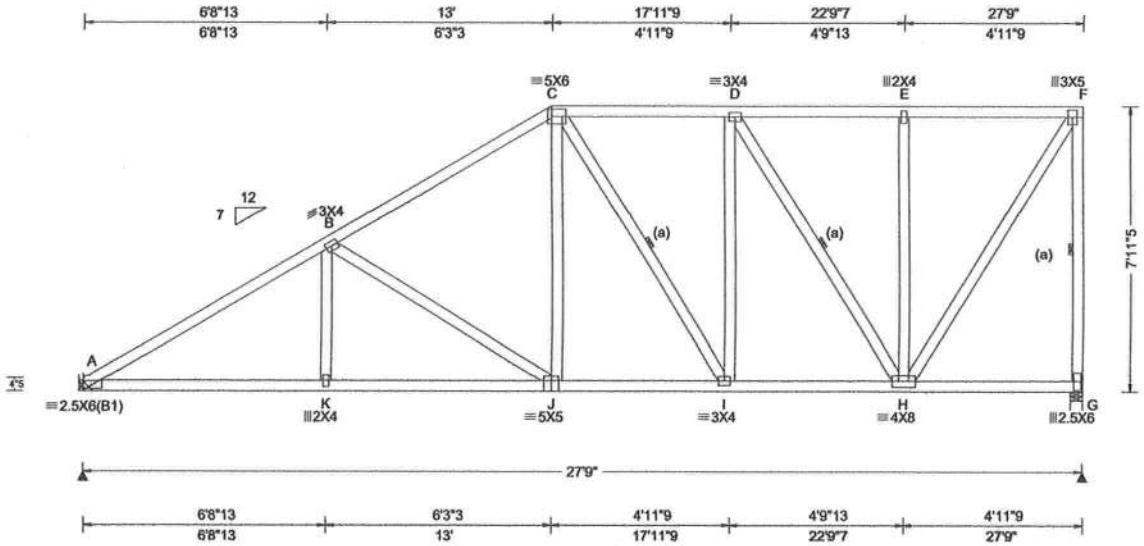

Loading Criteria (psf)	Wind Criteria	Snow Criteria (Pg,Pf in PSF)	Defl/CSI Criteria
TCLL: 20.00 TCDL: 10.00 BCLL: 0.00 BCDL: 10.00 Des Ld: 40.00 NCBCLL: 10.00 Soffit: 2.00 Load Duration: 1.25 Spacing: 24.0 "	Wind Std: ASCE 7-16 Speed: 130 mph Enclosure: Closed Risk Category: II EXP: C Kzt: NA Mean Height: 15.00 ft TCDL: 5.0 psf BCDL: 5.0 psf MWFRS Parallel Dist: h/2 to h C&C Dist a: 3.00 ft Loc. from endwall: not in 9.00 ft GCpi: 0.18 Wind Duration: 1.60	Pg: NA Ct: NA CAT: NA Pf: NA Ce: NA Lu: NA Cs: NA Snow Duration: NA Building Code: FBC 7th Ed. 2020 Res. TPI Std: 2014 Rep Fac: Yes FT/RT:20(0)/10(0) Plate Type(s): WAVE	PP Deflection in loc L/defl L/# VERT(LL): 0.055 J 999 240 VERT(CL): 0.114 J 999 180 HORZ(LL): 0.022 G - - HORZ(TL): 0.047 G - - Creep Factor: 2.0 Max TC CSI: 0.485 Max BC CSI: 0.534 Max Web CSI: 0.937 VIEW Ver: 21.02.01.1214.12

▲ Maximum Reactions (lbs)

	Gravity			Non-Gravity		
Loc	R+	/ R-	/ Rh	/ Rw	/ U	/ RL
A	1159	/-	/-	/711	/159	/267
G	1149	/-	/-	/627	/245	/-

Wind reactions based on MWFRS
A Brg Wid = - Min Req = -
G Brg Wid = 4.0 Min Req = 1.5 (Truss)
Bearing G is a rigid surface.
Members not listed have forces less than 375#

Maximum Top Chord Forces Per Ply (lbs)

Chords	Tens.	Comp.	Chords	Tens.	Comp.
A - B	541	-1862	D - E	332	-637
B - C	526	-1333	E - F	332	-637
C - D	494	-969			

Maximum Bot Chord Forces Per Ply (lbs)

Chords	Tens.	Comp.	Chords	Tens.	Comp.
A - K	1528	-656	J - I	1059	-503
K - J	1525	-657	I - H	960	-495

Maximum Web Forces Per Ply (lbs)

Webs	Tens.	Comp.	Webs	Tens.	Comp.
B - J	186	-556	H - F	1169	-609
C - J	448	-45	F - G	632	-1108
D - H	312	-620			

Lumber

Top chord: 2x4 SP #2;
Bot chord: 2x4 SP #2;
Webs: 2x4 SP #3;

Bracing

(a) Continuous lateral restraint equally spaced on member.

Hangers / Ties

(J) Hanger Support Required, by others

Purlins

In lieu of structural panels use purlins to brace all flat TC @ 24" oc.

Wind

Wind loads based on MWFRS with additional C&C member design.

Right end vertical not exposed to wind pressure.

Wind loading based on both gable and hip roof types.

Additional Notes

The overall height of this truss excluding overhang is 7-11-5.

WILLIAM H. KRICK
LICENSE
No. 70861
STATE OF FLORIDA
PROFESSIONAL ENGINEER

COA #0278

05/11/2022

Florida Certificate of Product Approval #FL 1999

****WARNING**** READ AND FOLLOW ALL NOTES ON THIS DRAWING!
****IMPORTANT**** FURNISH THIS DRAWING TO ALL CONTRACTORS INCLUDING THE INSTALLERS

Trusses require extreme care in fabricating, handling, shipping, installing and bracing. Refer to and follow the latest edition of BCSI (Building Component Safety Information, by TPI and SBCA) for safety practices prior to performing these functions. Installers shall provide temporary bracing per BCSI. Unless noted otherwise, top chord shall have properly attached structural sheathing and bottom chord shall have a properly attached rigid ceiling. Locations shown for permanent lateral restraint of webs shall have bracing installed per BCSI sections B3, B7, or B10, as applicable. Apply plates to each face of truss and position as shown above and on the Joint Details, unless noted otherwise. Refer to drawings 160A-Z for standard plate positions. Refer to job's General Notes page for additional information.

Alpine, a division of ITW Building Components Group Inc. shall not be responsible for any deviation from this drawing, any failure to build the truss in conformance with ANSI/TPI 1, or for handling, shipping, installation and bracing of trusses. A seal on this drawing or cover page listing this drawing, indicates acceptance of professional engineering responsibility solely for the design shown. The suitability and use of this drawing for any structure is the responsibility of the Building Designer per ANSI/TPI 1 Sec.2.

For more information see these web sites: Alpine: alpineitw.com; TPI: tpinst.org; SBCA: sbcacomponents.com; ICC: iccsafe.org; AWC: awc.org

ALPINE
AN ITW COMPANY
155 Harlem Ave
North Building, 4th Floor
Glenview, IL 60025

SEQN: 656846 HIPS FROM: CDM	Ply: 1 Qty: 1	**Job Number:** 22-7559 Judy Baughn **Truss Label:** C09	Cust: R 215 JRef: 1Xff2150006 T25 DrwNo: 131.22.0814.43433 KD / WHK 05/11/2022

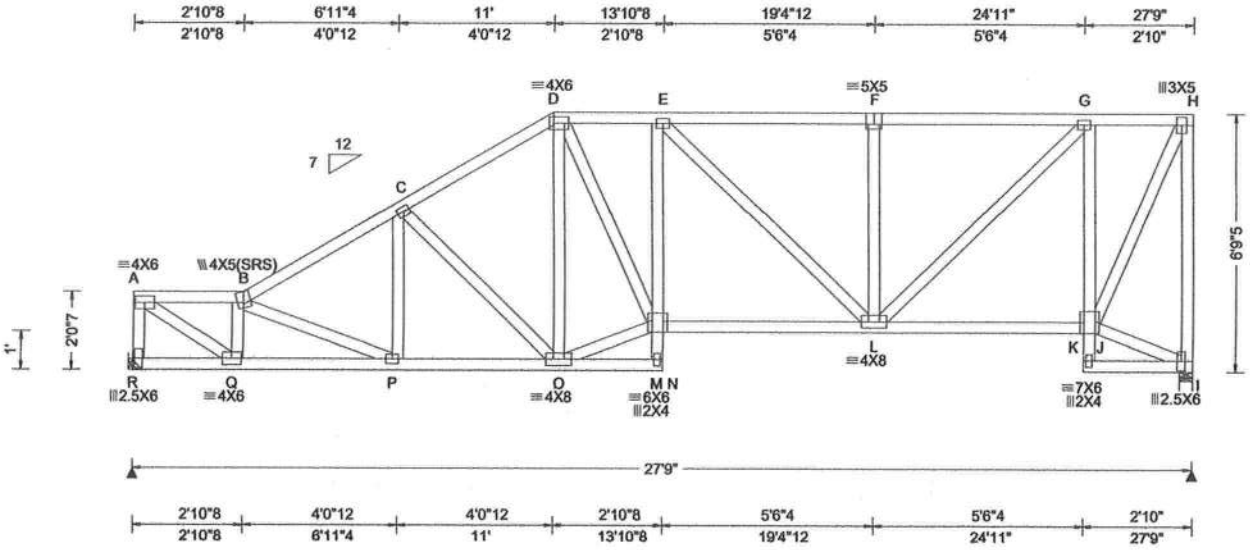

Loading Criteria (psf)

TCLL:	20.00
TCDL:	10.00
BCLL:	0.00
BCDL:	10.00
Des Ld:	40.00
NCBCLL:	10.00
Soffit:	2.00

Load Duration: 1.25
Spacing: 24.0 "

Wind Criteria
Wind Std: ASCE 7-16
Speed: 130 mph
Enclosure: Closed
Risk Category: II
EXP: C Kzt: NA
Mean Height: 15.00 ft
TCDL: 5.0 psf
BCDL: 5.0 psf
MWFRS Parallel Dist: h/2 to h
C&C Dist a: 3.00 ft
Loc. from endwall: not in 9.00 ft
GCpi: 0.18
Wind Duration: 1.60

Snow Criteria (Pg,Pf in PSF)
Pg: NA Ct: NA CAT: NA
Pf: NA Ce: NA
Lu: NA Cs: NA
Snow Duration: NA

Building Code:
FBC 7th Ed. 2020 Res.
TPI Std: 2014
Rep Fac: Yes
FT/RT:20(0)/10(0)
Plate Type(s):
WAVE

Defl/CSI Criteria

PP Deflection in	loc	L/defl	L/#
VERT(LL): 0.074	E	999	240
VERT(CL): 0.153	E	999	180
HORZ(LL): 0.036	I	-	-
HORZ(TL): 0.075	I	-	-

Creep Factor: 2.0
Max TC CSI: 0.370
Max BC CSI: 0.522
Max Web CSI: 0.917

VIEW Ver: 21.02.01.1214.12

▲ Maximum Reactions (lbs)

	Gravity			Non-Gravity		
Loc	R+	/ R-	/ Rh	/ Rw	/ U	/ RL
R	1154	/-	/-	/653	/177	/166
I	1154	/-	/-	/610	/235	/-

Wind reactions based on MWFRS
R Brg Wid = - Min Req = -
I Brg Wid = 4.0 Min Req = 1.5 (Truss)
Bearing I is a rigid surface.
Members not listed have forces less than 375#

Maximum Top Chord Forces Per Ply (lbs)

Chords	Tens.	Comp.	Chords	Tens.	Comp.
A - B	565	-1556	E - F	676	-1272
B - C	669	-1793	F - G	676	-1272
C - D	650	-1447	G - H	304	-548
D - E	793	-1520			

Maximum Bot Chord Forces Per Ply (lbs)

Chords	Tens.	Comp.	Chords	Tens.	Comp.
Q - P	1722	-809	M - L	1526	-800
P - O	1492	-701	L - J	575	-321

Maximum Web Forces Per Ply (lbs)

Webs	Tens.	Comp.	Webs	Tens.	Comp.
A - R	455	-1121	O - M	1277	-626
A - Q	1867	-677	L - G	984	-511
Q - B	431	-1007	G - J	627	-988
C - O	156	-431	J - H	1205	-669
D - M	728	-450	H - I	641	-1122

Lumber
Top chord: 2x4 SP #2;
Bot chord: 2x4 SP #2;
Webs: 2x4 SP #3;

Plating Notes
All plates are 3X4 except as noted.

Hangers / Ties
(J) Hanger Support Required, by others

Purlins
In lieu of structural panels use purlins to brace all flat TC @ 24" oc.

Wind
Wind loads based on MWFRS with additional C&C member design.
End verticals not exposed to wind pressure.
Wind loading based on both gable and hip roof types.

Additional Notes
The overall height of this truss excluding overhang is 6-9-5.

WILLIAM H. KRICK
LICENSE
No. 70861
STATE OF FLORIDA
PROFESSIONAL ENGINEER

COA #0278

06/11/2022

Florida Certificate of Product Approval #FL 1999

****WARNING**** READ AND FOLLOW ALL NOTES ON THIS DRAWING!
****IMPORTANT**** FURNISH THIS DRAWING TO ALL CONTRACTORS INCLUDING THE INSTALLERS

Trusses require extreme care in fabricating, handling, shipping, installing and bracing. Refer to and follow the latest edition of BCSI (Building Component Safety Information, by TPI and SBCA) for safety practices prior to performing these functions. Installers shall provide temporary bracing per BCSI. Unless noted otherwise, top chord shall have properly attached structural sheathing and bottom chord shall have a properly attached rigid ceiling. Locations shown for permanent lateral restraint of webs shall have bracing installed per BCSI sections B3, B7, or B10, as applicable. Apply plates to each face of truss and position as shown above and on the Joint Details, unless noted otherwise. Refer to drawings 160A-Z for standard plate positions. Refer to job's General Notes page for additional information.

Alpine, a division of ITW Building Components Group Inc. shall not be responsible for any deviation from this drawing, any failure to build the truss in conformance with ANSI/TPI 1, or for handling, shipping, installation and bracing of trusses. A seal on this drawing or cover page listing this drawing, indicates acceptance of professional engineering responsibility solely for the design shown. The suitability and use of this drawing for any structure is the responsibility of the Building Designer per ANSI/TPI 1 Sec.2.

For more information see these web sites: Alpine: alpineitw.com; TPI: tpinst.org; SBCA: sbcacomponents.com; ICC: iccsafe.org; AWC: awc.org

ALPINE AN ITW COMPANY
155 Harlem Ave
North Building, 4th Floor
Glenview, IL 60025

SEQN: 656843 HIPS FROM: CDM	Ply: 1 Qty: 1	**Job Number:** 22-7559 Judy Baughn **Truss Label:** C10		Cust: R 215 JRef: 1Xff2150006 T29 DrwNo: 131.22.0814.41420 KD / WHK 05/11/2022

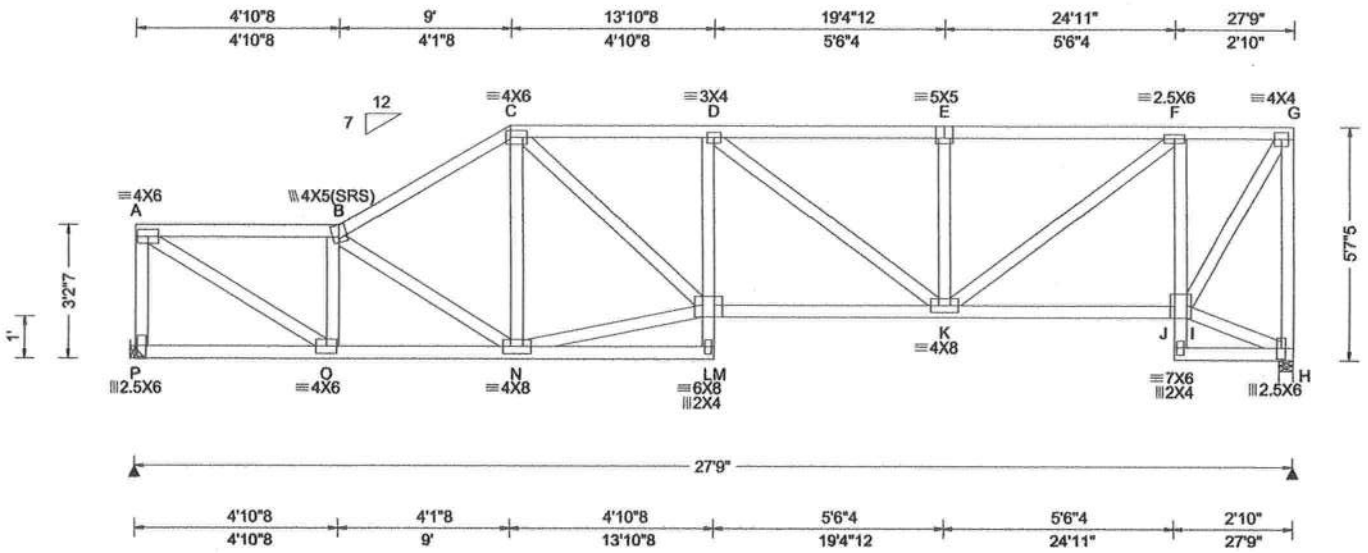

Loading Criteria (psf)

TCLL:	20.00
TCDL:	10.00
BCLL:	0.00
BCDL:	10.00
Des Ld:	40.00
NCBCLL:	10.00
Soffit:	2.00

Load Duration: 1.25
Spacing: 24.0 "

Wind Criteria
Wind Std: ASCE 7-16
Speed: 130 mph
Enclosure: Closed
Risk Category: II
EXP: C Kzt: NA
Mean Height: 15.00 ft
TCDL: 5.0 psf
BCDL: 5.0 psf
MWFRS Parallel Dist: h/2 to h
C&C Dist a: 3.00 ft
Loc. from endwall: not in 9.00 ft
GCpi: 0.18
Wind Duration: 1.60

Snow Criteria (Pg,Pf in PSF)
Pg: NA Ct: NA CAT: NA
Pf: NA Ce: NA
Lu: NA Cs: NA
Snow Duration: NA

Building Code:
FBC 7th Ed. 2020 Res.
TPI Std: 2014
Rep Fac: Yes
FT/RT:20(0)/10(0)
Plate Type(s):
WAVE

Defl/CSI Criteria

PP Deflection in	loc	L/defl	L/#
VERT(LL): 0.092	D	999	240
VERT(CL): 0.191	D	999	180
HORZ(LL): 0.039	H	-	-
HORZ(TL): 0.080	H	-	-

Creep Factor: 2.0
Max TC CSI: 0.430
Max BC CSI: 0.583
Max Web CSI: 0.691

VIEW Ver: 21.02.01.1214.12

▲ Maximum Reactions (lbs)

Loc	Gravity R+	Gravity / R-	Gravity / Rh	Non-Gravity / Rw	Non-Gravity / U	Non-Gravity / RL
P	1154	/-	/-	/611	/194	/84
H	1154	/-	/-	/589	/224	/-

Wind reactions based on MWFRS
P Brg Wid = - Min Req = -
H Brg Wid = 4.0 Min Req = 1.5 (Truss)
Bearing H is a rigid surface.
Members not listed have forces less than 375#

Maximum Top Chord Forces Per Ply (lbs)

Chords	Tens.	Comp.	Chords	Tens.	Comp.
A - B	716	-1543	D - E	885	-1612
B - C	785	-1617	E - F	885	-1612
C - D	1082	-1943	F - G	406	-704

Maximum Bot Chord Forces Per Ply (lbs)

Chords	Tens.	Comp.	Chords	Tens.	Comp.
O - N	1632	-854	K - I	737	-428
L - K	1954	-1092			

Maximum Web Forces Per Ply (lbs)

Webs	Tens.	Comp.	Webs	Tens.	Comp.
A - P	584	-1109	D - K	261	-432
A - O	1814	-839	K - F	1112	-599
O - B	508	-890	F - I	648	-984
C - L	801	-500	I - G	1284	-741
N - L	1341	-706	G - H	664	-1121

Lumber

Top chord: 2x4 SP #2;
Bot chord: 2x4 SP #2;
Webs: 2x4 SP #3;

Hangers / Ties

(J) Hanger Support Required, by others

Purlins

In lieu of structural panels use purlins to brace all flat TC @ 24" oc.

Wind

Wind loads based on MWFRS with additional C&C member design.

End verticals not exposed to wind pressure.

Wind loading based on both gable and hip roof types.

Additional Notes

The overall height of this truss excluding overhang is 5-7-5.

WILLIAM H. KRICK
LICENSE
No. 70861
STATE OF FLORIDA
PROFESSIONAL ENGINEER

COA #0278

05/11/2022

Florida Certificate of Product Approval #FL 1999

****WARNING**** READ AND FOLLOW ALL NOTES ON THIS DRAWING!
****IMPORTANT**** FURNISH THIS DRAWING TO ALL CONTRACTORS INCLUDING THE INSTALLERS

Trusses require extreme care in fabricating, handling, shipping, installing and bracing. Refer to and follow the latest edition of BCSI (Building Component Safety Information, by TPI and SBCA) for safety practices prior to performing these functions. Installers shall provide temporary bracing per BCSI. Unless noted otherwise, top chord shall have properly attached structural sheathing and bottom chord shall have a properly attached rigid ceiling. Locations shown for permanent lateral restraint of webs shall have bracing installed per BCSI sections B3, B7, or B10, as applicable. Apply plates to each face of truss and position as shown above and on the Joint Details, unless noted otherwise. Refer to drawings 160A-Z for standard plate positions. Refer to job's General Notes page for additional information.

Alpine, a division of ITW Building Components Group Inc. shall not be responsible for any deviation from this drawing, any failure to build the truss in conformance with ANSI/TPI 1, or for handling, shipping, installation and bracing of trusses. A seal on this drawing or cover page listing this drawing, indicates acceptance of professional engineering responsibility solely for the design shown. The suitability and use of this drawing for any structure is the responsibility of the Building Designer per ANSI/TPI 1 Sec.2.

For more information see these web sites: Alpine: alpineitw.com; TPI: tpinst.org; SBCA: sbcacomponents.com; ICC: iccsafe.org; AWC: awc.org

ALPINE
AN ITW COMPANY
155 Harlem Ave
North Building, 4th Floor
Glenview, IL 60025

SEQN: 656840 SPEC	Ply: 1	Job Number: 22-7559	Cust: R 215 JRef: 1Xff2150006 T5
FROM: CDM	Qty: 1	Judy Baughn	DrwNo: 131.22.0814.39027
		Truss Label: C11	KD / WHK 05/11/2022

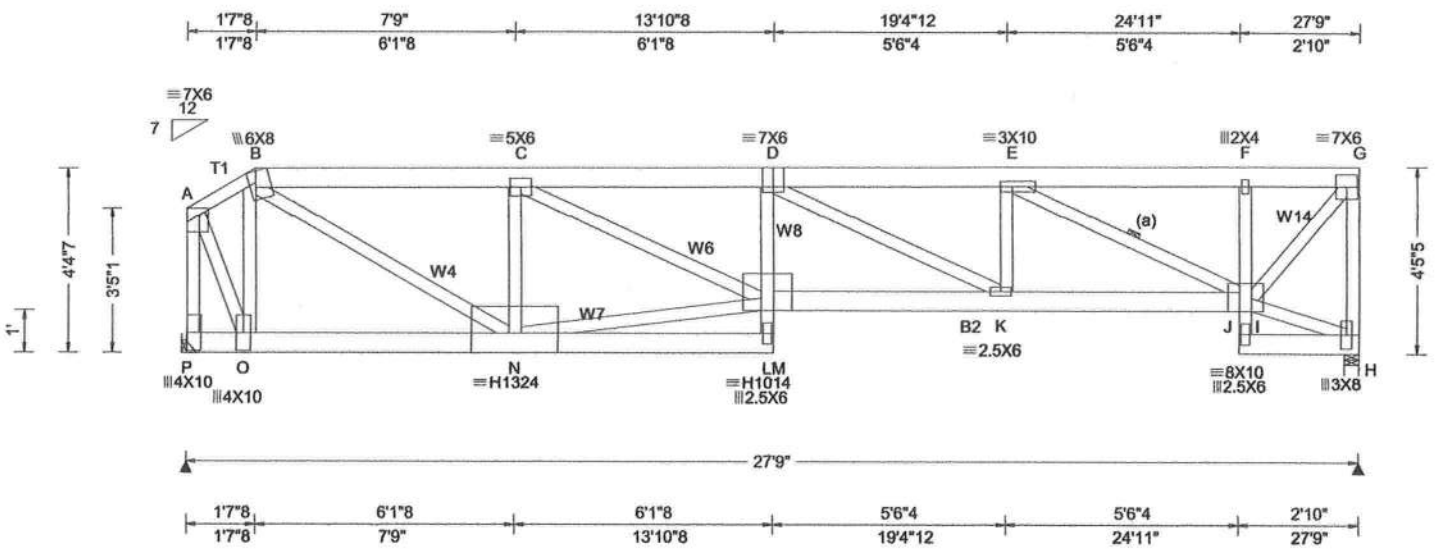

Loading Criteria (psf)

TCLL:	20.00
TCDL:	10.00
BCLL:	0.00
BCDL:	10.00
Des Ld:	40.00
NCBCLL:	10.00
Soffit:	2.00

Load Duration: 1.25
Spacing: 24.0 "

Wind Criteria
Wind Std: ASCE 7-16
Speed: 130 mph
Enclosure: Closed
Risk Category: II
EXP: C Kzt: NA
Mean Height: 15.00 ft
TCDL: 5.0 psf
BCDL: 5.0 psf
MWFRS Parallel Dist: 0 to h/2
C&C Dist a: 3.00 ft
Loc. from endwall: not in 4.50 ft
GCpi: 0.18
Wind Duration: 1.60

Snow Criteria (Pg,Pf in PSF)
Pg: NA Ct: NA CAT: NA
Pf: NA Ce: NA
Lu: NA Cs: NA
Snow Duration: NA

Building Code:
FBC 7th Ed. 2020 Res.
TPI Std: 2014
Rep Fac: Varies by Ld Case
FT/RT:20(0)/10(0)
Plate Type(s):
WAVE, HS

Defl/CSI Criteria

PP Deflection in	loc	L/defl	L/#
VERT(LL): 0.244	D	999	240
VERT(CL): 0.492	D	677	180
HORZ(LL): 0.087	H	-	-
HORZ(TL): 0.175	H	-	-

Creep Factor: 2.0
Max TC CSI: 0.693
Max BC CSI: 0.624
Max Web CSI: 0.938

VIEW Ver: 21.02.01.1214.12

▲ Maximum Reactions (lbs)

Loc	Gravity R+	Gravity /R-	Gravity /Rh	Non-Gravity /Rw	Non-Gravity /U	Non-Gravity /RL
P	2528	/-	/-	/-	/611	/-
H	2499	/-	/-	/-	/498	/-

Wind reactions based on MWFRS
P Brg Wid = - Min Req = -
H Brg Wid = 4.0 Min Req = 2.9 (Truss)
Bearing H is a rigid surface.
Members not listed have forces less than 375#

Maximum Top Chord Forces Per Ply (lbs)

Chords	Tens.	Comp.	Chords	Tens.	Comp.
A - B	287	-1142	D - E	1045	-5322
B - C	891	-3896	E - F	467	-2324
C - D	1382	-6359	F - G	464	-2300

Maximum Bot Chord Forces Per Ply (lbs)

Chords	Tens.	Comp.	Chords	Tens.	Comp.
O - N	1081	-266	K - I	5235	-1035
L - K	6418	-1398			

Maximum Web Forces Per Ply (lbs)

Webs	Tens.	Comp.	Webs	Tens.	Comp.
A - P	702	-2796	D - K	403	-1247
A - O	2410	-598	K - E	953	-109
O - B	308	-1393	E - I	636	-3259
B - N	3346	-743	F - I	205	-501
N - C	532	-1799	I - G	3336	-673
N - L	3773	-870	G - H	504	-2438
C - L	2667	-525			

Lumber

Top chord: 2x6 SP #2; T1 2x4 SP #2;
Bot chord: 2x6 SP #2; B2 2x6 SP 2400f-2.0E;
Webs: 2x4 SP #3; W4,W6,W7,W8,W14 2x4 SP #2;

Bracing

(a) Continuous lateral restraint equally spaced on member.

Special Loads

——(Lumber Dur.Fac.=1.25 / Plate Dur.Fac.=1.25)
TC: From 63 plf at 0.00 to 63 plf at 1.62
TC: From 32 plf at 1.62 to 32 plf at 27.75
BC: From 10 plf at 0.00 to 10 plf at 27.75
TC: 188 lb Conc. Load at 7.81, 9.81,11.81,13.81 25.81
TC: 131 lb Conc. Load at 15.81,17.81,19.81,21.81 23.81
BC: 269 lb Conc. Load at 1.81, 3.81, 5.81
BC: 129 lb Conc. Load at 7.81, 9.81,11.81,13.81 25.81
BC: 155 lb Conc. Load at 15.81,17.81,19.81,21.81 23.81

Hangers / Ties

(J) Hanger Support Required, by others

Wind

Wind loads and reactions based on MWFRS.
End verticals not exposed to wind pressure.
Wind loading based on both gable and hip roof types.

Additional Notes

The overall height of this truss excluding overhang is 4-5-5.

WILLIAM H. KRICK
LICENSE
No. 70861
STATE OF FLORIDA
PROFESSIONAL ENGINEER

COA #0278

05/11/2022

Florida Certificate of Product Approval #FL 1999

****WARNING**** READ AND FOLLOW ALL NOTES ON THIS DRAWING!
****IMPORTANT**** FURNISH THIS DRAWING TO ALL CONTRACTORS INCLUDING THE INSTALLERS

Trusses require extreme care in fabricating, handling, shipping, installing and bracing. Refer to and follow the latest edition of BCSI (Building Component Safety Information, by TPI and SBCA) for safety practices prior to performing these functions. Installers shall provide temporary bracing per BCSI. Unless noted otherwise, top chord shall have properly attached structural sheathing and bottom chord shall have a properly attached rigid ceiling. Locations shown for permanent lateral restraint of webs shall have bracing installed per BCSI sections B3, B7, or B10, as applicable. Apply plates to each face of truss and position as shown above and on the Joint Details, unless noted otherwise. Refer to drawings 160A-Z for standard plate positions. Refer to job's General Notes page for additional information.

Alpine, a division of ITW Building Components Group Inc. shall not be responsible for any deviation from this drawing, any failure to build the truss in conformance with ANSI/TPI 1, or for handling, shipping, installation and bracing of trusses. A seal on this drawing or cover page listing this drawing, indicates acceptance of professional engineering responsibility solely for the design shown. The suitability and use of this drawing for any structure is the responsibility of the Building Designer per ANSI/TPI 1 Sec.2.

For more information see these web sites: Alpine: alpineitw.com; TPI: tpinst.org; SBCA: sbcacomponents.com; ICC: iccsafe.org; AWC: awc.org

ALPINE
AN ITW COMPANY
155 Harlem Ave
North Building, 4th Floor
Glenview, IL 60025

SEQN: 656922 GABL FROM: CDM	Ply: 1 Qty: 1	**Job Number:** 22-7559 Judy Baughn **Truss Label:** D01	Cust: R 215 JRef: 1Xff2150006 T13 DrwNo: 131.22.0814.27277 KD / WHK 05/11/2022

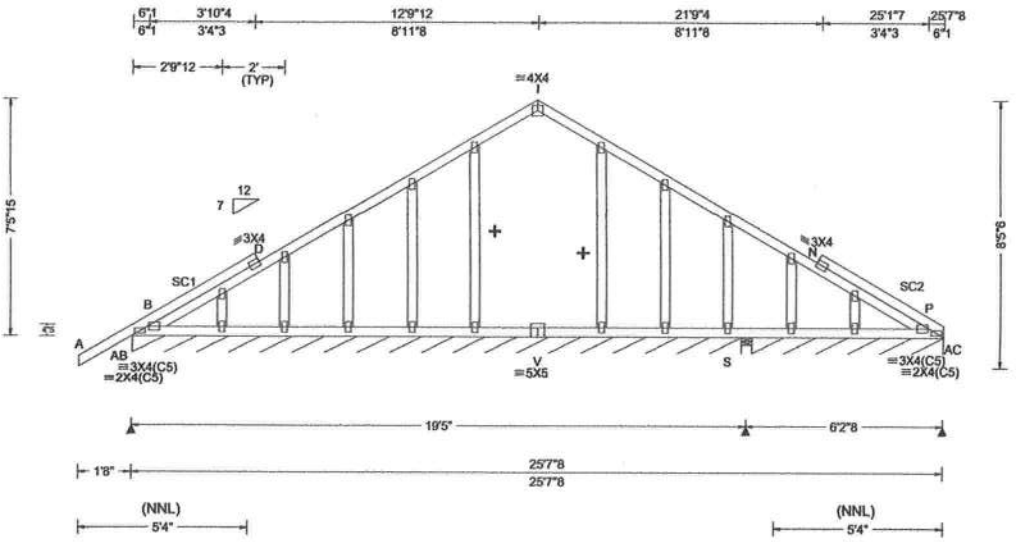

Loading Criteria (psf)	**Wind Criteria**	**Snow Criteria** (Pg,Pf in PSF)	**Defl/CSI Criteria**
TCLL: 20.00	Wind Std: ASCE 7-16	Pg: NA Ct: NA CAT: NA	PP Deflection in loc L/defl L/#
TCDL: 10.00	Speed: 130 mph	Pf: NA Ce: NA	VERT(LL): 0.005 I 999 240
BCLL: 0.00	Enclosure: Closed	Lu: NA Cs: NA	VERT(CL): 0.008 I 999 180
BCDL: 10.00	Risk Category: II	Snow Duration: NA	HORZ(LL): 0.006 N - -
Des Ld: 40.00	EXP: C Kzt: NA		HORZ(TL): 0.007 N - -
NCBCLL: 10.00	Mean Height: 15.00 ft	Building Code:	Creep Factor: 2.0
Soffit: 2.00	TCDL: 5.0 psf	FBC 7th Ed. 2020 Res.	Max TC CSI: 0.318
Load Duration: 1.25	BCDL: 5.0 psf	TPI Std: 2014	Max BC CSI: 0.066
Spacing: 24.0 "	MWFRS Parallel Dist: 0 to h/2	Rep Fac: Yes	Max Web CSI: 0.108
	C&C Dist a: 3.00 ft	FT/RT:20(0)/10(0)	
	Loc. from endwall: Any	Plate Type(s):	
	GCpi: 0.18	WAVE	VIEW Ver: 21.02.01.1214.12
	Wind Duration: 1.60		

▲ Maximum Reactions (lbs), or *=PLF

Loc	Gravity R+	Gravity / R-	Gravity / Rh	Non-Gravity / Rw	Non-Gravity / U	Non-Gravity / RL
AB	*88	/-	/-	/50	/17	/11
S	30	/-	/-	/15	/-	/-
AC	*88	/-	/-	/51	/7	/-

Wind reactions based on MWFRS
AB Brg Wid = 231 Min Req = -
S Brg Wid = 4.0 Min Req = 1.5 (Truss)
AC Brg Wid = 72.5 Min Req = -
Bearings AB, S, & S are a rigid surface.
Members not listed have forces less than 375#

Maximum Bot Chord Forces Per Ply (lbs)

Chords	Tens.	Comp.
V - P	438	-138

Lumber

Top chord: 2x4 SP #2;
Bot chord: 2x4 SP #2;
Webs: 2x4 SP #3;
Stack Chord: SC1 2x4 SP #2;
Stack Chord: SC2 2x4 SP #2;

+ Member to be laterally braced for horizontal wind loads. bracing system to be desiged and furnished by others.

Plating Notes

All plates are 2X4 except as noted.

Loading

Gable end supports 8" max rake overhang. Top chord must not be cut or notched.

Wind

Wind loads based on MWFRS with additional C&C member design.

Wind loading based on both gable and hip roof types.

Additional Notes

See DWGS A14015ENC160118 & GBLLETIN0118 for gable wind bracing and other requirements.

Stacked top chord must NOT be notched or cut in area (NNL). Dropped top chord braced at 24" oc intervals. Attach stacked top chord (SC) to dropped top chord in notchable area using 3x4 tie-plates 24" oc. Center plate on stacked/dropped chord interface, plate length perpendicular to chord length. Splice top chord in notchable area using 3x6.

The overall height of this truss excluding overhang is 7-5-15.

WILLIAM H. KRICK
LICENSE
No. 70861
STATE OF FLORIDA
PROFESSIONAL ENGINEER

COA #0278

05/11/2022

Florida Certificate of Product Approval #FL 1999

****WARNING**** READ AND FOLLOW ALL NOTES ON THIS DRAWING!
****IMPORTANT**** FURNISH THIS DRAWING TO ALL CONTRACTORS INCLUDING THE INSTALLERS

Trusses require extreme care in fabricating, handling, shipping, installing and bracing. Refer to and follow the latest edition of BCSI (Building Component Safety Information, by TPI and SBCA) for safety practices prior to performing these functions. Installers shall provide temporary bracing per BCSI. Unless noted otherwise, top chord shall have properly attached structural sheathing and bottom chord shall have a properly attached rigid ceiling. Locations shown for permanent lateral restraint of webs shall have bracing installed per BCSI sections B3, B7, or B10, as applicable. Apply plates to each face of truss and position as shown above and on the Joint Details, unless noted otherwise. Refer to drawings 160A-Z for standard plate positions. Refer to job's General Notes page for additional information.

Alpine, a division of ITW Building Components Group Inc. shall not be responsible for any deviation from this drawing, any failure to build the truss in conformance with ANSI/TPI 1, or for handling, shipping, installation and bracing of trusses. A seal on this drawing or cover page listing this drawing, indicates acceptance of professional engineering responsibility solely for the design shown. The suitability and use of this drawing for any structure is the responsibility of the Building Designer per ANSI/TPI 1 Sec.2.

For more information see these web sites: Alpine: alpineitw.com; TPI: tpinst.org; SBCA: sbcacomponents.com; ICC: iccsafe.org; AWC: awc.org

ALPINE
AN ITW COMPANY
155 Harlem Ave
North Building, 4th Floor
Glenview, IL 60025

SEQN: 657717 COMN FROM: CDM	Ply: 1 Qty: 1	**Job Number:** 22-7559 Judy Baughn **Truss Label:** D02		Cust: R 215 JRef: 1Xff2150006 T41 DrwNo: 131.22.0814.14407 KD / WHK 05/11/2022

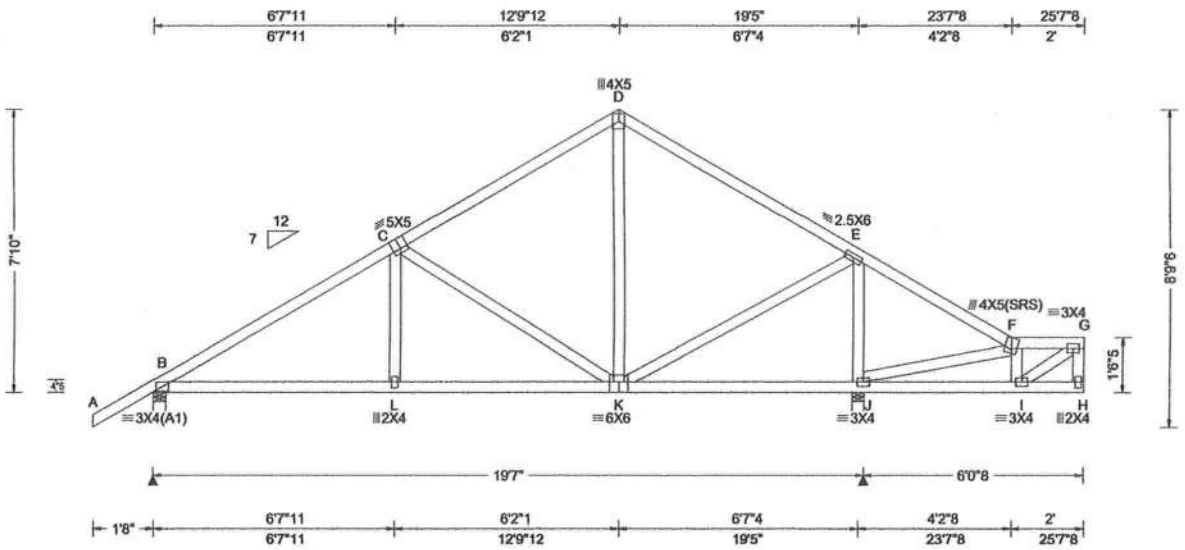

Loading Criteria (psf)		Wind Criteria	Snow Criteria (Pg,Pf in PSF)	Defl/CSI Criteria	
TCLL:	20.00	Wind Std: ASCE 7-16	Pg: NA Ct: NA CAT: NA	PP Deflection in loc L/defl L/#	
TCDL:	10.00	Speed: 130 mph	Pf: NA Ce: NA	VERT(LL): 0.023 L 999 240	
BCLL:	0.00	Enclosure: Closed	Lu: NA Cs: NA	VERT(CL): 0.049 L 999 180	
BCDL:	10.00	Risk Category: II	Snow Duration: NA	HORZ(LL): 0.008 C - -	
Des Ld:	40.00	EXP: C Kzt: NA		HORZ(TL): 0.017 K - -	
NCBCLL:	10.00	Mean Height: 15.00 ft	Building Code:	Creep Factor: 2.0	
Soffit:	2.00	TCDL: 5.0 psf	FBC 7th Ed. 2020 Res.	Max TC CSI: 0.486	
Load Duration: 1.25		BCDL: 5.0 psf	TPI Std: 2014	Max BC CSI: 0.413	
Spacing: 24.0 "		MWFRS Parallel Dist: 0 to h/2	Rep Fac: Yes	Max Web CSI: 0.530	
		C&C Dist a: 3.00 ft	FT/RT:20(0)/10(0)		
		Loc. from endwall: Any	Plate Type(s):		
		GCpi: 0.18	WAVE	VIEW Ver: 21.02.01.1214.12	
		Wind Duration: 1.60			

▲ Maximum Reactions (lbs)

Loc	Gravity R+	Gravity / R-	Gravity / Rh	Non-Gravity / Rw	Non-Gravity / U	Non-Gravity / RL
B	897	/-	/-	/557	/156	/211
J	1384	/-	/-	/891	/184	/-

Wind reactions based on MWFRS
B Brg Wid = 4.0 Min Req = 1.5 (Truss)
J Brg Wid = 4.0 Min Req = 1.5 (Truss)
Bearings B & J are a rigid surface.
Members not listed have forces less than 375#

Maximum Top Chord Forces Per Ply (lbs)

Chords	Tens.	Comp.	Chords	Tens.	Comp.
B - C	295	-1104	D - E	250	-604
C - D	249	-600	E - F	517	-180

Maximum Bot Chord Forces Per Ply (lbs)

Chords	Tens.	Comp.	Chords	Tens.	Comp.
B - L	870	-213	L - K	868	-214

Maximum Web Forces Per Ply (lbs)

Webs	Tens.	Comp.	Webs	Tens.	Comp.
C - K	247	-522	E - J	449	-1182
K - E	757	-140			

Lumber

Top chord: 2x4 SP #2;
Bot chord: 2x4 SP #2;
Webs: 2x4 SP #3;

Purlins

In lieu of structural panels use purlins to brace all flat TC @ 24" oc.

Wind

Wind loads based on MWFRS with additional C&C member design.

Right end vertical not exposed to wind pressure.

Right cantilever is exposed to wind

Wind loading based on both gable and hip roof types.

Additional Notes

The overall height of this truss excluding overhang is 7-10-0.

WILLIAM H. KRICK
LICENSE
No. 70861
STATE OF FLORIDA
PROFESSIONAL ENGINEER

COA #0278

05/11/2022

Florida Certificate of Product Approval #FL 1999

****WARNING**** READ AND FOLLOW ALL NOTES ON THIS DRAWING!
****IMPORTANT**** FURNISH THIS DRAWING TO ALL CONTRACTORS INCLUDING THE INSTALLERS

Trusses require extreme care in fabricating, handling, shipping, installing and bracing. Refer to and follow the latest edition of BCSI (Building Component Safety Information, by TPI and SBCA) for safety practices prior to performing these functions. Installers shall provide temporary bracing per BCSI. Unless noted otherwise, top chord shall have properly attached structural sheathing and bottom chord shall have a properly attached rigid ceiling. Locations shown for permanent lateral restraint of webs shall have bracing installed per BCSI sections B3, B7, or B10, as applicable. Apply plates to each face of truss and position as shown above and on the Joint Details, unless noted otherwise. Refer to drawings 160A-Z for standard plate positions. Refer to job's General Notes page for additional information.

Alpine, a division of ITW Building Components Group Inc. shall not be responsible for any deviation from this drawing, any failure to build the truss in conformance with ANSI/TPI 1, or for handling, shipping, installation and bracing of trusses. A seal on this drawing or cover page listing this drawing, indicates acceptance of professional engineering responsibility solely for the design shown. The suitability and use of this drawing for any structure is the responsibility of the Building Designer per ANSI/TPI 1 Sec.2.

For more information see these web sites: Alpine: alpineitw.com; TPI: tpinst.org; SBCA: sbcacomponents.com; ICC: iccsafe.org; AWC: awc.org

ALPINE
AN ITW COMPANY
155 Harlem Ave
North Building, 4th Floor
Glenview, IL 60025

SEQN: 657720 COMN FROM: CDM	Ply: 1 Qty: 1	**Job Number:** 22-7559 Judy Baughn **Truss Label:** D03	Cust: R 215 JRef: 1Xff2150006 T39 DrwNo: 131.22.0814.05043 KD / WHK 05/11/2022

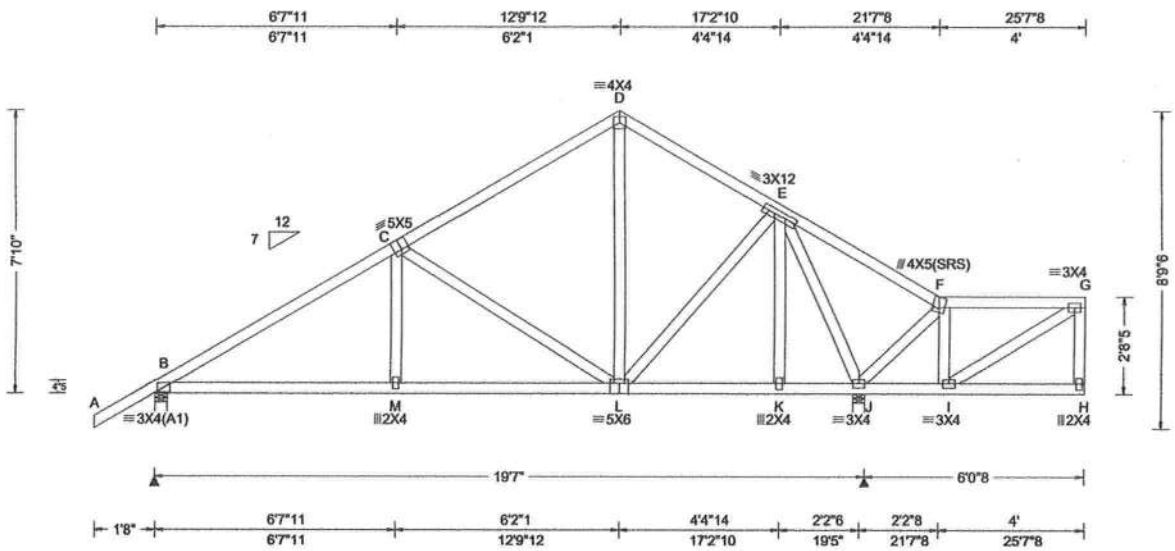

Loading Criteria (psf)

TCLL:	20.00
TCDL:	10.00
BCLL:	0.00
BCDL:	10.00
Des Ld:	40.00
NCBCLL:	10.00
Soffit:	2.00

Load Duration: 1.25
Spacing: 24.0 "

Wind Criteria
Wind Std: ASCE 7-16
Speed: 130 mph
Enclosure: Closed
Risk Category: II
EXP: C Kzt: NA
Mean Height: 15.00 ft
TCDL: 5.0 psf
BCDL: 5.0 psf
MWFRS Parallel Dist: 0 to h/2
C&C Dist a: 3.00 ft
Loc. from endwall: not in 4.50 ft
GCpi: 0.18
Wind Duration: 1.60

Snow Criteria (Pg,Pf in PSF)
Pg: NA Ct: NA CAT: NA
Pf: NA Ce: NA
Lu: NA Cs: NA
Snow Duration: NA

Building Code:
FBC 7th Ed. 2020 Res.
TPI Std: 2014
Rep Fac: Yes
FT/RT:20(0)/10(0)
Plate Type(s):
WAVE

Defl/CSI Criteria

PP Deflection in	loc	L/defl	L/#
VERT(LL): 0.022	M	999	240
VERT(CL): 0.048	M	999	180
HORZ(LL): 0.009	G	-	-
HORZ(TL): 0.019	G	-	-

Creep Factor: 2.0
Max TC CSI: 0.435
Max BC CSI: 0.421
Max Web CSI: 0.663

VIEW Ver: 21.02.01.1214.12

▲ Maximum Reactions (lbs)

	Gravity			Non-Gravity		
Loc	R+	/ R-	/ Rh	/ Rw	/ U	/ RL
B	889	/-	/-	/551	/150	/211
J	1395	/-	/-	/864	/193	/-

Wind reactions based on MWFRS
B Brg Wid = 4.0 Min Req = 1.5 (Truss)
J Brg Wid = 4.0 Min Req = 1.5 (Truss)
Bearings B & J are a rigid surface.
Members not listed have forces less than 375#

Maximum Top Chord Forces Per Ply (lbs)

Chords	Tens.	Comp.	Chords	Tens.	Comp.
B - C	183	- 1091	D - E	180	- 540
C - D	171	- 578	E - F	580	- 237

Maximum Bot Chord Forces Per Ply (lbs)

Chords	Tens.	Comp.	Chords	Tens.	Comp.
B - M	861	- 157	M - L	858	- 158

Maximum Web Forces Per Ply (lbs)

Webs	Tens.	Comp.	Webs	Tens.	Comp.
C - L	184	- 538	E - J	322	- 1203
L - E	451	- 92			

Lumber

Top chord: 2x4 SP #2;
Bot chord: 2x4 SP #2;
Webs: 2x4 SP #3;

Purlins

In lieu of structural panels use purlins to brace all flat TC @ 24" oc.

Wind

Wind loads based on MWFRS with additional C&C member design.

Right end vertical not exposed to wind pressure.

Right cantilever is exposed to wind

Wind loading based on both gable and hip roof types.

Additional Notes

The overall height of this truss excluding overhang is 7-10-0.

WILLIAM H. KRICK
LICENSE
No. 70861
STATE OF FLORIDA
PROFESSIONAL ENGINEER

COA #0278

05/11/2022

Florida Certificate of Product Approval #FL 1999

****WARNING**** READ AND FOLLOW ALL NOTES ON THIS DRAWING!
****IMPORTANT**** FURNISH THIS DRAWING TO ALL CONTRACTORS INCLUDING THE INSTALLERS

Trusses require extreme care in fabricating, handling, shipping, installing and bracing. Refer to and follow the latest edition of BCSI (Building Component Safety Information, by TPI and SBCA) for safety practices prior to performing these functions. Installers shall provide temporary bracing per BCSI. Unless noted otherwise, top chord shall have properly attached structural sheathing and bottom chord shall have a properly attached rigid ceiling. Locations shown for permanent lateral restraint of webs shall have bracing installed per BCSI sections B3, B7, or B10, as applicable. Apply plates to each face of truss and position as shown above and on the Joint Details, unless noted otherwise. Refer to drawings 160A-Z for standard plate positions. Refer to job's General Notes page for additional information.

Alpine, a division of ITW Building Components Group Inc. shall not be responsible for any deviation from this drawing, any failure to build the truss in conformance with ANSI/TPI 1, or for handling, shipping, installation and bracing of trusses. A seal on this drawing or cover page listing this drawing, indicates acceptance of professional engineering responsibility solely for the design shown. The suitability and use of this drawing for any structure is the responsibility of the Building Designer per ANSI/TPI 1 Sec.2.

For more information see these web sites: Alpine: alpineitw.com; TPI: tpinst.org; SBCA: sbcacomponents.com; ICC: iccsafe.org; AWC: awc.org

ALPINE
AN ITW COMPANY
155 Harlem Ave
North Building, 4th Floor
Glenview, IL 60025

SEQN: 657723 COMN FROM: CDM	Ply: 1 Qty: 1	**Job Number:** 22-7559 Judy Baughn **Truss Label:** D04	Cust: R 215 JRef: 1Xff2150006 T48 DrwNo: 131.22.0814.03123 KD / WHK 05/11/2022

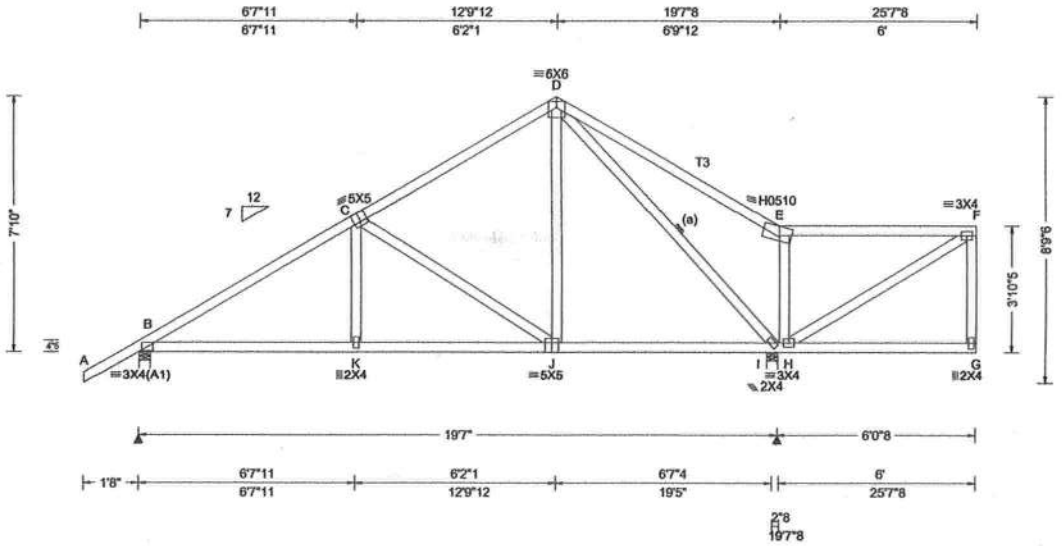

Loading Criteria (psf)

TCLL:	20.00
TCDL:	10.00
BCLL:	0.00
BCDL:	10.00
Des Ld:	40.00
NCBCLL:	10.00
Soffit:	2.00

Load Duration: 1.25
Spacing: 24.0 "

Wind Criteria
Wind Std: ASCE 7-16
Speed: 130 mph
Enclosure: Closed
Risk Category: II
EXP: C Kzt: NA
Mean Height: 15.00 ft
TCDL: 5.0 psf
BCDL: 5.0 psf
MWFRS Parallel Dist: h/2 to h
C&C Dist a: 3.00 ft
Loc. from endwall: not in 4.50 ft
GCpi: 0.18
Wind Duration: 1.60

Snow Criteria (Pg,Pf in PSF)
Pg: NA Ct: NA CAT: NA
Pf: NA Ce: NA
Lu: NA Cs: NA
Snow Duration: NA

Building Code:
FBC 7th Ed. 2020 Res.
TPI Std: 2014
Rep Fac: Yes
FT/RT:20(0)/10(0)
Plate Type(s):
WAVE, HS

Defl/CSI Criteria

PP Deflection in	loc	L/defl	L/#
VERT(LL): 0.029	K	999	240
VERT(CL): 0.053	K	999	180
HORZ(LL): 0.011	I	-	-
HORZ(TL): 0.021	I	-	-

Creep Factor: 2.0
Max TC CSI: 0.769
Max BC CSI: 0.561
Max Web CSI: 0.576

VIEW Ver: 21.02.01.1214.12

▲ Maximum Reactions (lbs)

Loc	Gravity R+	Gravity /R-	Gravity /Rh	Non-Gravity /Rw	Non-Gravity /U	Non-Gravity /RL
B	889	/-	/-	/552	/143	/211
I	1592	/-	/-	/834	/230	/-

Wind reactions based on MWFRS
B Brg Wid = 4.0 Min Req = 1.5 (Truss)
I Brg Wid = 4.0 Min Req = 1.5 (Truss)
Bearings B & I are a rigid surface.
Members not listed have forces less than 375#

Maximum Top Chord Forces Per Ply (lbs)

Chords	Tens.	Comp.	Chords	Tens.	Comp.
B - C	174	-1097	D - E	475	-217
C - D	153	-577			

Maximum Bot Chord Forces Per Ply (lbs)

Chords	Tens.	Comp.	Chords	Tens.	Comp.
B - K	868	-191	J - I	389	-73
K - J	866	-192			

Maximum Web Forces Per Ply (lbs)

Webs	Tens.	Comp.	Webs	Tens.	Comp.
C - J	206	-568	E - H	302	-468
J - D	463	-40	H - F	262	-436
D - I	237	-1021			

Lumber

Top chord: 2x4 SP #2; T3 2x4 SP M-31;
Bot chord: 2x4 SP #2;
Webs: 2x4 SP #3;

Bracing

(a) Continuous lateral restraint equally spaced on member.

Purlins

In lieu of structural panels use purlins to brace all flat TC @ 24" oc.

Wind

Wind loads based on MWFRS with additional C&C member design.

Right end vertical not exposed to wind pressure.

Right cantilever is exposed to wind

Wind loading based on both gable and hip roof types.

Additional Notes

The overall height of this truss excluding overhang is 7-10-0.

WILLIAM H. KRICK
LICENSE
No. 70861
STATE OF FLORIDA
PROFESSIONAL ENGINEER

COA #0278

05/11/2022

Florida Certificate of Product Approval #FL 1999

****WARNING**** READ AND FOLLOW ALL NOTES ON THIS DRAWING!
****IMPORTANT**** FURNISH THIS DRAWING TO ALL CONTRACTORS INCLUDING THE INSTALLERS

Trusses require extreme care in fabricating, handling, shipping, installing and bracing. Refer to and follow the latest edition of BCSI (Building Component Safety Information, by TPI and SBCA) for safety practices prior to performing these functions. Installers shall provide temporary bracing per BCSI. Unless noted otherwise, top chord shall have properly attached structural sheathing and bottom chord shall have a properly attached rigid ceiling. Locations shown for permanent lateral restraint of webs shall have bracing installed per BCSI sections B3, B7, or B10, as applicable. Apply plates to each face of truss and position as shown above and on the Joint Details, unless noted otherwise. Refer to drawings 160A-Z for standard plate positions. Refer to job's General Notes page for additional information.

Alpine, a division of ITW Building Components Group Inc. shall not be responsible for any deviation from this drawing, any failure to build the truss in conformance with ANSI/TPI 1, or for handling, shipping, installation and bracing of trusses. A seal on this drawing or cover page listing this drawing, indicates acceptance of professional engineering responsibility solely for the design shown. The suitability and use of this drawing for any structure is the responsibility of the Building Designer per ANSI/TPI 1 Sec.2.

For more information see these web sites: Alpine: alpineitw.com; TPI: tpinst.org; SBCA: sbcacomponents.com; ICC: iccsafe.org; AWC: awc.org

ALPINE AN ITW COMPANY
155 Harlem Ave
North Building, 4th Floor
Glenview, IL 60025

SEQN: 657726 COMN FROM: CDM	Ply: 1 Qty: 1	**Job Number:** 22-7559 Judy Baughn **Truss Label:** D05		Cust: R 215 JRef: 1Xff2150006 T49 DrwNo: 131.22.0814.01340 KD / WHK 05/11/2022

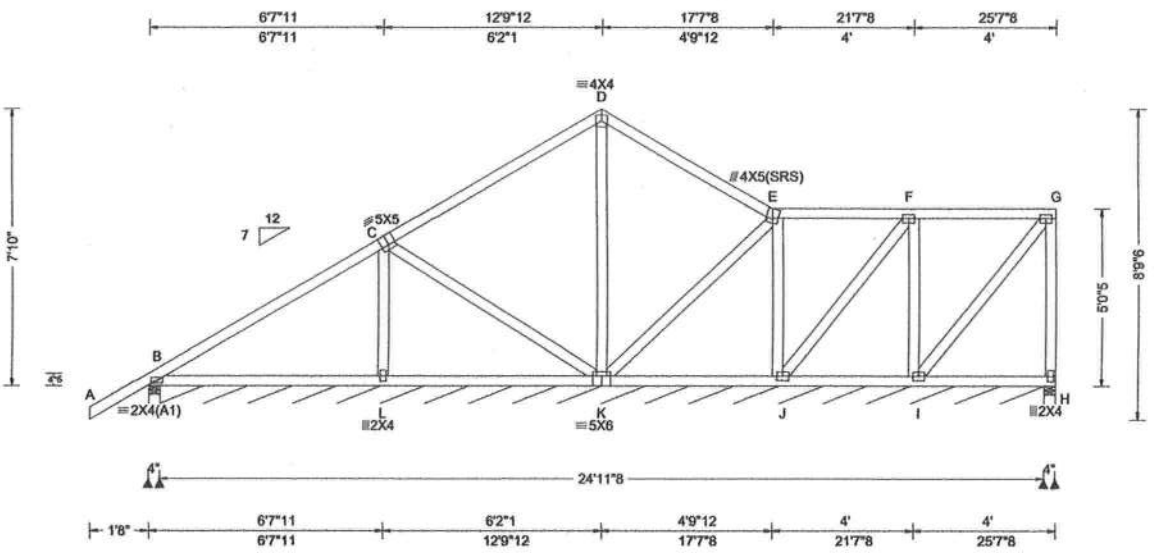

Loading Criteria (psf)		Wind Criteria	Snow Criteria (Pg,Pf in PSF)	Defl/CSI Criteria	▲ Maximum Reactions (lbs), or *=PLF
TCLL: 20.00		Wind Std: ASCE 7-16	Pg: NA Ct: NA CAT: NA	PP Deflection in loc L/defl L/#	Gravity / Non-Gravity
TCDL: 10.00		Speed: 130 mph	Pf: NA Ce: NA	VERT(LL): 0.006 B 999 240	Loc R+ / R- / Rh / Rw / U / RL
BCLL: 0.00		Enclosure: Closed	Lu: NA Cs: NA	VERT(CL): 0.013 B 999 180	B 442 / - / - / 276 / 48 / 211
BCDL: 10.00		Risk Category: II	Snow Duration: NA	HORZ(LL): 0.005 B - -	B* 66 / - / - / 38 / 13 / -
Des Ld: 40.00		EXP: C Kzt: NA		HORZ(TL): 0.009 B - -	H 153 / - / - / 78 / 29 / -
NCBCLL: 10.00		Mean Height: 15.00 ft	Building Code:	Creep Factor: 2.0	Wind reactions based on MWFRS
Soffit: 2.00		TCDL: 5.0 psf	FBC 7th Ed. 2020 Res.	Max TC CSI: 0.526	B Brg Wid = 4.0 Min Req = 1.5 (Truss)
Load Duration: 1.25		BCDL: 5.0 psf	TPI Std: 2014	Max BC CSI: 0.336	B Brg Wid = 299 Min Req = -
Spacing: 24.0 "		MWFRS Parallel Dist: h/2 to h	Rep Fac: Yes	Max Web CSI: 0.293	H Brg Wid = 4.0 Min Req = 1.5 (Truss)
		C&C Dist a: 3.00 ft	FT/RT:20(0)/10(0)		Bearings B, B, & H are a rigid surface.
		Loc. from endwall: not in 9.00 ft	Plate Type(s):		Members not listed have forces less than 375#
		GCpi: 0.18	WAVE	VIEW Ver: 21.02.01.1214.12	
		Wind Duration: 1.60			

Lumber

Top chord: 2x4 SP #2;
Bot chord: 2x4 SP #2;
Webs: 2x4 SP #3;

Plating Notes

All plates are 3X4 except as noted.

Purlins

In lieu of structural panels use purlins to brace all flat TC @ 24" oc.

Wind

Wind loads based on MWFRS with additional C&C member design.

Right end vertical not exposed to wind pressure.

Wind loading based on both gable and hip roof types.

Additional Notes

The overall height of this truss excluding overhang is 7-10-0.

WILLIAM H. KRICK
LICENSE
No. 70861
STATE OF FLORIDA
PROFESSIONAL ENGINEER

COA #0278

05/11/2022

Florida Certificate of Product Approval #FL 1999

****WARNING**** READ AND FOLLOW ALL NOTES ON THIS DRAWING!
****IMPORTANT**** FURNISH THIS DRAWING TO ALL CONTRACTORS INCLUDING THE INSTALLERS

Trusses require extreme care in fabricating, handling, shipping, installing and bracing. Refer to and follow the latest edition of BCSI (Building Component Safety Information, by TPI and SBCA) for safety practices prior to performing these functions. Installers shall provide temporary bracing per BCSI. Unless noted otherwise, top chord shall have properly attached structural sheathing and bottom chord shall have a properly attached rigid ceiling. Locations shown for permanent lateral restraint of webs shall have bracing installed per BCSI sections B3, B7, or B10, as applicable. Apply plates to each face of truss and position as shown above and on the Joint Details, unless noted otherwise. Refer to drawings 160A-Z for standard plate positions. Refer to job's General Notes page for additional information.

Alpine, a division of ITW Building Components Group Inc. shall not be responsible for any deviation from this drawing, any failure to build the truss in conformance with ANSI/TPI 1, or for handling, shipping, installation and bracing of trusses. A seal on this drawing or cover page listing this drawing, indicates acceptance of professional engineering responsibility solely for the design shown. The suitability and use of this drawing for any structure is the responsibility of the Building Designer per ANSI/TPI 1 Sec.2.

For more information see these web sites: Alpine: alpineitw.com; TPI: tpinst.org; SBCA: sbcacomponents.com; ICC: iccsafe.org; AWC: awc.org

ALPINE AN ITW COMPANY
155 Harlem Ave
North Building, 4th Floor
Glenview, IL 60025

SEQN: 657729 COMN FROM: CDM	Ply: 1 Qty: 2	**Job Number:** 22-7559 Judy Baughn **Truss Label:** D06	Cust: R 215 JRef:1Xff2150006 T43 DrwNo: 131.22.0813.59597 KD / WHK 05/11/2022

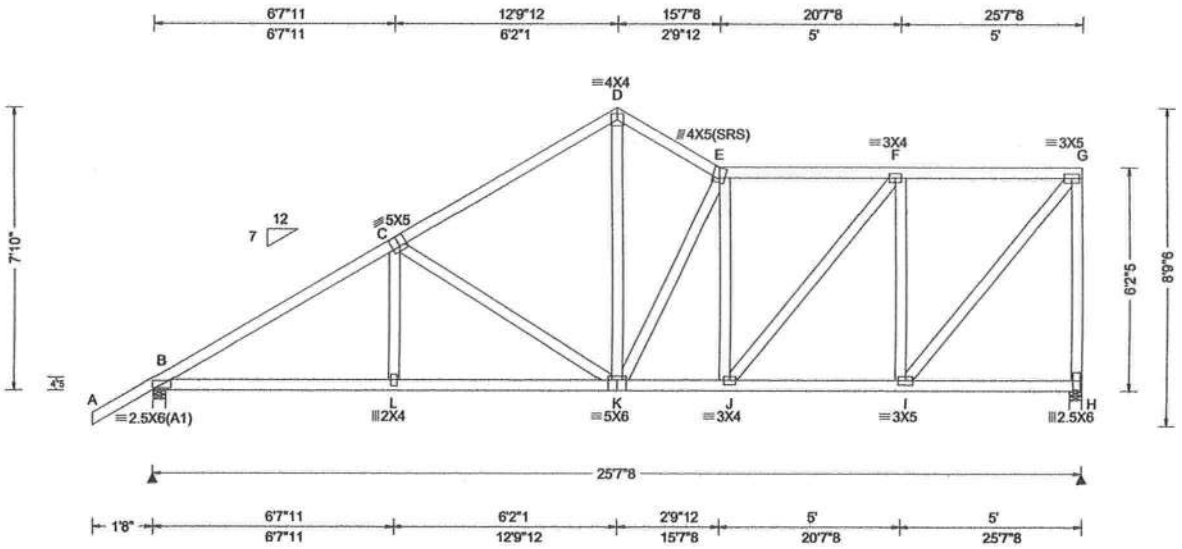

Loading Criteria (psf)

TCLL:	20.00
TCDL:	10.00
BCLL:	0.00
BCDL:	10.00
Des Ld:	40.00
NCBCLL:	10.00
Soffit:	2.00

Load Duration: 1.25
Spacing: 24.0 "

Wind Criteria
Wind Std: ASCE 7-16
Speed: 130 mph
Enclosure: Closed
Risk Category: II
EXP: C Kzt: NA
Mean Height: 15.00 ft
TCDL: 5.0 psf
BCDL: 5.0 psf
MWFRS Parallel Dist: h/2 to h
C&C Dist a: 3.00 ft
Loc. from endwall: not in 9.00 ft
GCpi: 0.18
Wind Duration: 1.60

Snow Criteria (Pg,Pf in PSF)
Pg: NA Ct: NA CAT: NA
Pf: NA Ce: NA
Lu: NA Cs: NA
Snow Duration: NA

Building Code:
FBC 7th Ed. 2020 Res.
TPI Std: 2014
Rep Fac: Yes
FT/RT:20(0)/10(0)
Plate Type(s):
WAVE

Defl/CSI Criteria

PP Deflection in	loc	L/defl	L/#
VERT(LL): 0.054	K	999	240
VERT(CL): 0.111	K	999	180
HORZ(LL): 0.019	C	-	-
HORZ(TL): 0.040	C	-	-

Creep Factor: 2.0
Max TC CSI: 0.421
Max BC CSI: 0.491
Max Web CSI: 0.692

VIEW Ver: 21.02.01.1214.12

▲ Maximum Reactions (lbs)

	Gravity			Non-Gravity		
Loc	R+	/ R-	/ Rh	/ Rw	/ U	/ RL
B	1189	/-	/-	/740	/183	/234
H	1055	/-	/-	/571	/210	/-

Wind reactions based on MWFRS
B Brg Wid = 4.0 Min Req = 1.5 (Truss)
H Brg Wid = 4.0 Min Req = 1.5 (Truss)
Bearings B & H are a rigid surface.
Members not listed have forces less than 375#

Maximum Top Chord Forces Per Ply (lbs)

Chords	Tens.	Comp.	Chords	Tens.	Comp.
B - C	398	-1663	E - F	429	-1076
C - D	390	-1160	F - G	337	-731
D - E	411	-1083			

Maximum Bot Chord Forces Per Ply (lbs)

Chords	Tens.	Comp.	Chords	Tens.	Comp.
B - L	1352	-470	K - J	1092	-434
L - K	1350	-471	J - I	770	-360

Maximum Web Forces Per Ply (lbs)

Webs	Tens.	Comp.	Webs	Tens.	Comp.
C - K	176	-521	F - I	468	-775
D - K	761	-277	I - G	1151	-531
K - E	276	-418	G - H	536	-1016
J - F	501	-111			

Lumber

Top chord: 2x4 SP #2;
Bot chord: 2x4 SP #2;
Webs: 2x4 SP #3;

Purlins

In lieu of structural panels use purlins to brace all flat TC @ 24" oc.

Wind

Wind loads based on MWFRS with additional C&C member design.

Right end vertical not exposed to wind pressure.

Wind loading based on both gable and hip roof types.

Additional Notes

The overall height of this truss excluding overhang is 7-10-0.

WILLIAM H. KRICK
LICENSE
No. 70861
STATE OF FLORIDA
PROFESSIONAL ENGINEER

COA #0278

05/11/2022

Florida Certificate of Product Approval #FL 1999

****WARNING**** READ AND FOLLOW ALL NOTES ON THIS DRAWING!
****IMPORTANT**** FURNISH THIS DRAWING TO ALL CONTRACTORS INCLUDING THE INSTALLERS

Trusses require extreme care in fabricating, handling, shipping, installing and bracing. Refer to and follow the latest edition of BCSI (Building Component Safety Information, by TPI and SBCA) for safety practices prior to performing these functions. Installers shall provide temporary bracing per BCSI. Unless noted otherwise, top chord shall have properly attached structural sheathing and bottom chord shall have a properly attached rigid ceiling. Locations shown for permanent lateral restraint of webs shall have bracing installed per BCSI sections B3, B7, or B10, as applicable. Apply plates to each face of truss and position as shown above and on the Joint Details, unless noted otherwise. Refer to drawings 160A-Z for standard plate positions. Refer to job's General Notes page for additional information.

Alpine, a division of ITW Building Components Group Inc. shall not be responsible for any deviation from this drawing, any failure to build the truss in conformance with ANSI/TPI 1, or for handling, shipping, installation and bracing of trusses. A seal on this drawing or cover page listing this drawing, indicates acceptance of professional engineering responsibility solely for the design shown. The suitability and use of this drawing for any structure is the responsibility of the Building Designer per ANSI/TPI 1 Sec.2.

For more information see these web sites: Alpine: alpineitw.com; TPI: tpinst.org; SBCA: sbcacomponents.com; ICC: iccsafe.org; AWC: awc.org

ALPINE
AN ITW COMPANY
155 Harlem Ave
North Building, 4th Floor
Glenview, IL 60025

SEQN: 657732 COMN	Ply: 1	Job Number: 22-7559	Cust: R 215 JRef: 1Xff2150006 T37
FROM: CDM	Qty: 2	Judy Baughn	DrwNo: 131.22.0813.53477
		Truss Label: D07	KD / WHK 05/11/2022

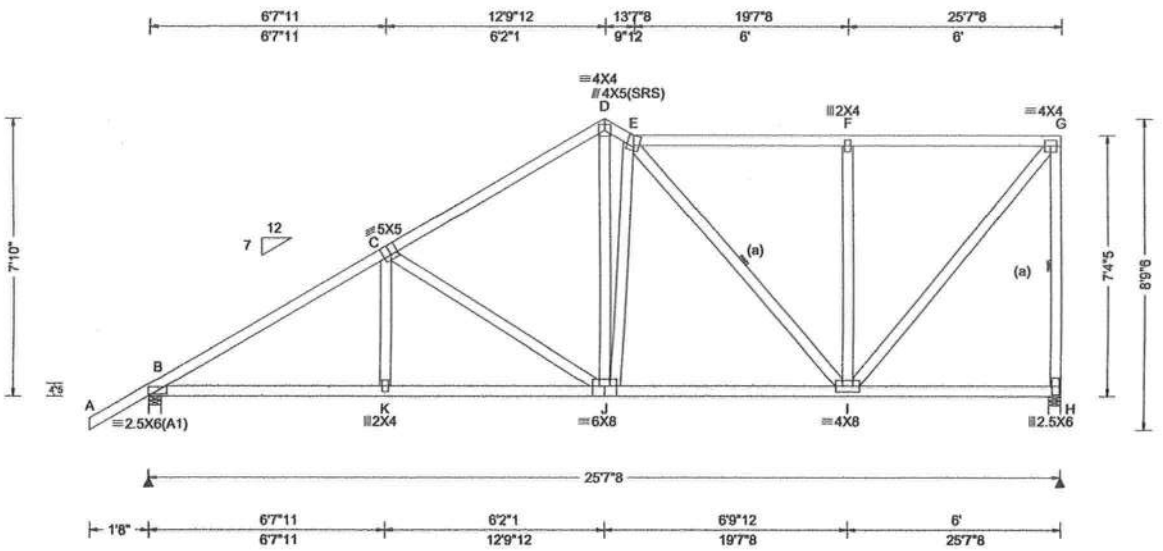

Loading Criteria (psf)

TCLL:	20.00
TCDL:	10.00
BCLL:	0.00
BCDL:	10.00
Des Ld:	40.00
NCBCLL:	10.00
Soffit:	2.00

Load Duration: 1.25
Spacing: 24.0 "

Wind Criteria
Wind Std: ASCE 7-16
Speed: 130 mph
Enclosure: Closed
Risk Category: II
EXP: C Kzt: NA
Mean Height: 15.00 ft
TCDL: 5.0 psf
BCDL: 5.0 psf
MWFRS Parallel Dist: h/2 to h
C&C Dist a: 3.00 ft
Loc. from endwall: not in 9.00 ft
GCpi: 0.18
Wind Duration: 1.60

Snow Criteria (Pg,Pf in PSF)
Pg: NA Ct: NA CAT: NA
Pf: NA Ce: NA
Lu: NA Cs: NA
Snow Duration: NA

Building Code:
FBC 7th Ed. 2020 Res.
TPI Std: 2014
Rep Fac: Yes
FT/RT:20(0)/10(0)
Plate Type(s):
WAVE

Defl/CSI Criteria

PP Deflection in	loc	L/defl	L/#
VERT(LL): 0.060	E	999	240
VERT(CL): 0.114	E	999	180
HORZ(LL): 0.021	I	-	-
HORZ(TL): 0.040	I	-	-

Creep Factor: 2.0
Max TC CSI: 0.515
Max BC CSI: 0.532
Max Web CSI: 0.921

VIEW Ver: 21.02.01.1214.12

▲ Maximum Reactions (lbs)

	Gravity			Non-Gravity		
Loc	R+	/ R-	/ Rh	/ Rw	/ U	/ RL
B	1243	/-	/-	/753	/174	/276
H	1214	/-	/-	/579	/222	/-

Wind reactions based on MWFRS
B Brg Wid = 4.0 Min Req = 1.5 (Truss)
H Brg Wid = 4.0 Min Req = 1.5 (Truss)
Bearings B & H are a rigid surface.
Members not listed have forces less than 375#

Maximum Top Chord Forces Per Ply (lbs)

Chords	Tens.	Comp.	Chords	Tens.	Comp.
B - C	431	-1759	E - F	377	-813
C - D	430	-1278	F - G	377	-813
D - E	473	-1130			

Maximum Bot Chord Forces Per Ply (lbs)

Chords	Tens.	Comp.	Chords	Tens.	Comp.
B - K	1434	-538	J - I	1059	-441
K - J	1432	-539			

Maximum Web Forces Per Ply (lbs)

Webs	Tens.	Comp.	Webs	Tens.	Comp.
C - J	173	-495	F - I	446	-451
D - J	854	-353	I - G	1256	-582
E - I	103	-379	G - H	586	-1104

Lumber
Top chord: 2x4 SP #2;
Bot chord: 2x4 SP #2;
Webs: 2x4 SP #3;

Bracing
(a) Continuous lateral restraint equally spaced on member.

Loading
Truss passed check for 20 psf additional bottom chord live load in areas with 42"-high x 24"-wide clearance.

Purlins
In lieu of structural panels use purlins to brace all flat TC @ 24" oc.

Wind
Wind loads based on MWFRS with additional C&C member design.
Right end vertical not exposed to wind pressure.
Wind loading based on both gable and hip roof types.

Additional Notes
The overall height of this truss excluding overhang is 7-10-0.

WILLIAM H. KRICK
LICENSE
No. 70861
STATE OF FLORIDA
PROFESSIONAL ENGINEER

COA #0278
05/11/2022
Florida Certificate of Product Approval #FL 1999

****WARNING**** READ AND FOLLOW ALL NOTES ON THIS DRAWING!
****IMPORTANT**** FURNISH THIS DRAWING TO ALL CONTRACTORS INCLUDING THE INSTALLERS

Trusses require extreme care in fabricating, handling, shipping, installing and bracing. Refer to and follow the latest edition of BCSI (Building Component Safety Information, by TPI and SBCA) for safety practices prior to performing these functions. Installers shall provide temporary bracing per BCSI. Unless noted otherwise, top chord shall have properly attached structural sheathing and bottom chord shall have a properly attached rigid ceiling. Locations shown for permanent lateral restraint of webs shall have bracing installed per BCSI sections B3, B7, or B10, as applicable. Apply plates to each face of truss and position as shown above and on the Joint Details, unless noted otherwise. Refer to drawings 160A-Z for standard plate positions. Refer to job's General Notes page for additional information.

Alpine, a division of ITW Building Components Group Inc. shall not be responsible for any deviation from this drawing, any failure to build the truss in conformance with ANSI/TPI 1, or for handling, shipping, installation and bracing of trusses. A seal on this drawing or cover page listing this drawing, indicates acceptance of professional engineering responsibility solely for the design shown. The suitability and use of this drawing for any structure is the responsibility of the Building Designer per ANSI/TPI 1 Sec.2.

For more information see these web sites: Alpine: alpineitw.com; TPI: tpinst.org; SBCA: sbcacomponents.com; ICC: iccsafe.org; AWC: awc.org

ALPINE
AN ITW COMPANY
155 Harlem Ave
North Building, 4th Floor
Glenview, IL 60025

SEQN: 657735 COMN FROM: CDM	Ply: 1 Qty: 2	**Job Number:** 22-7559 Judy Baughn **Truss Label:** D08	Cust: R 215 JRef: 1Xff2150006 T46 DrwNo: 131.22.0813.51707 KD / WHK 05/11/2022

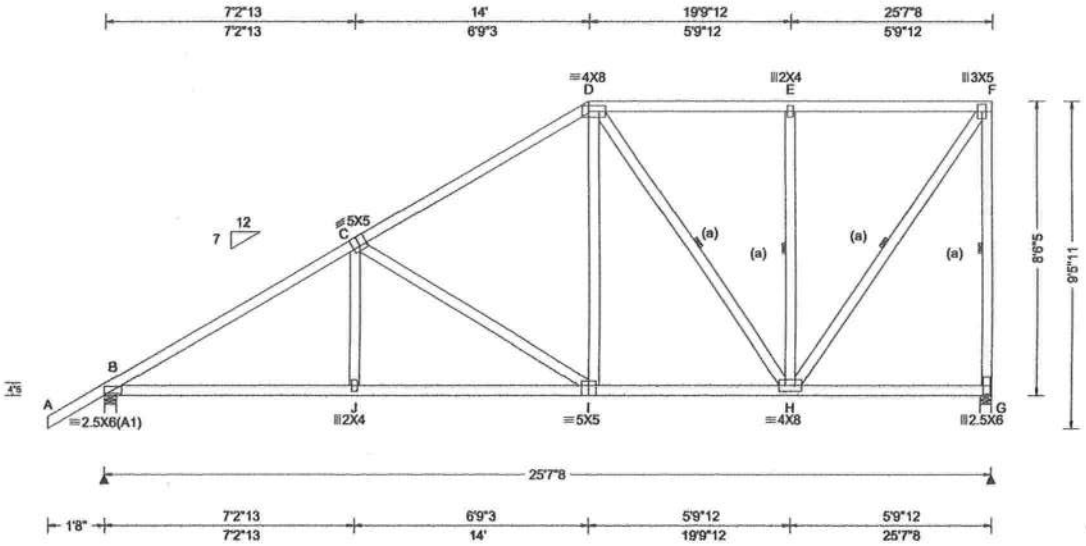

Loading Criteria (psf)

TCLL:	20.00
TCDL:	10.00
BCLL:	0.00
BCDL:	10.00
Des Ld:	40.00
NCBCLL:	10.00
Soffit:	2.00

Load Duration: 1.25
Spacing: 24.0 "

Wind Criteria
Wind Std: ASCE 7-16
Speed: 130 mph
Enclosure: Closed
Risk Category: II
EXP: C Kzt: NA
Mean Height: 15.00 ft
TCDL: 5.0 psf
BCDL: 5.0 psf
MWFRS Parallel Dist: h to 2h
C&C Dist a: 3.00 ft
Loc. from endwall: not in 9.00 ft
GCpi: 0.18
Wind Duration: 1.60

Snow Criteria (Pg,Pf in PSF)
Pg: NA Ct: NA CAT: NA
Pf: NA Ce: NA
Lu: NA Cs: NA
Snow Duration: NA

Building Code:
FBC 7th Ed. 2020 Res.
TPI Std: 2014
Rep Fac: Yes
FT/RT:20(0)/10(0)
Plate Type(s):
WAVE

Defl/CSI Criteria

PP Deflection in	loc	L/defl	L/#
VERT(LL): 0.056	J	999	240
VERT(CL): 0.105	J	999	180
HORZ(LL): 0.021	H	-	-
HORZ(TL): 0.039	H	-	-

Creep Factor: 2.0
Max TC CSI: 0.544
Max BC CSI: 0.554
Max Web CSI: 0.989

VIEW Ver: 21.02.01.1214.12

▲ Maximum Reactions (lbs)

	Gravity			Non-Gravity		
Loc	R+	/ R-	/ Rh	/ Rw	/ U	/ RL
B	1240	/-	/-	/764	/62	/229
G	1230	/-	/-	/594	/188	/-

Wind reactions based on MWFRS
B Brg Wid = 4.0 Min Req = 1.5 (Truss)
G Brg Wid = 4.0 Min Req = 1.5 (Truss)
Bearings B & G are a rigid surface.
Members not listed have forces less than 375#

Maximum Top Chord Forces Per Ply (lbs)

Chords	Tens.	Comp.	Chords	Tens.	Comp.
B - C	396	-1739	D - E	321	-684
C - D	392	-1187	E - F	321	-684

Maximum Bot Chord Forces Per Ply (lbs)

Chords	Tens.	Comp.	Chords	Tens.	Comp.
B - J	1411	-543	I - H	927	-393
J - I	1409	-544			

Maximum Web Forces Per Ply (lbs)

Webs	Tens.	Comp.	Webs	Tens.	Comp.
C - I	191	-573	E - H	425	-410
D - I	510	-44	H - F	1186	-556
D - H	125	-421	F - G	594	-1115

Lumber

Top chord: 2x4 SP #2;
Bot chord: 2x4 SP #2;
Webs: 2x4 SP #3;

Bracing

(a) Continuous lateral restraint equally spaced on member.

Loading

Truss passed check for 20 psf additional bottom chord live load in areas with 42"-high x 24"-wide clearance.

Purlins

In lieu of structural panels use purlins to brace all flat TC @ 24" oc.

Wind

Wind loads based on MWFRS with additional C&C member design.

Right end vertical not exposed to wind pressure.

Wind loading based on both gable and hip roof types.

Additional Notes

The overall height of this truss excluding overhang is 8-6-5.

WILLIAM H. KRICK
LICENSE
No. 70861
STATE OF FLORIDA
PROFESSIONAL ENGINEER

COA #0278

05/11/2022

Florida Certificate of Product Approval #FL 1999

****WARNING**** READ AND FOLLOW ALL NOTES ON THIS DRAWING!
****IMPORTANT**** FURNISH THIS DRAWING TO ALL CONTRACTORS INCLUDING THE INSTALLERS

Trusses require extreme care in fabricating, handling, shipping, installing and bracing. Refer to and follow the latest edition of BCSI (Building Component Safety Information, by TPI and SBCA) for safety practices prior to performing these functions. Installers shall provide temporary bracing per BCSI. Unless noted otherwise, top chord shall have properly attached structural sheathing and bottom chord shall have a properly attached rigid ceiling. Locations shown for permanent lateral restraint of webs shall have bracing installed per BCSI sections B3, B7, or B10, as applicable. Apply plates to each face of truss and position as shown above and on the Joint Details, unless noted otherwise. Refer to drawings 160A-Z for standard plate positions. Refer to job's General Notes page for additional information.

Alpine, a division of ITW Building Components Group Inc. shall not be responsible for any deviation from this drawing, any failure to build the truss in conformance with ANSI/TPI 1, or for handling, shipping, installation and bracing of trusses. A seal on this drawing or cover page listing this drawing, indicates acceptance of professional engineering responsibility solely for the design shown. The suitability and use of this drawing for any structure is the responsibility of the Building Designer per ANSI/TPI 1 Sec.2.

For more information see these web sites: Alpine: alpineitw.com; TPI: tpinst.org; SBCA: sbcacomponents.com; ICC: iccsafe.org; AWC: awc.org

ALPINE AN ITW COMPANY
155 Harlem Ave
North Building, 4th Floor
Glenview, IL 60025

SEQN: 657738 HIPM FROM: CDM	Ply: 1 Qty: 1	**Job Number:** 22-7559 Judy Baughn **Truss Label:** D09	Cust: R 215 JRef: 1Xff2150006 T50 DrwNo: 131.22.0813.49880 KD / WHK 05/11/2022

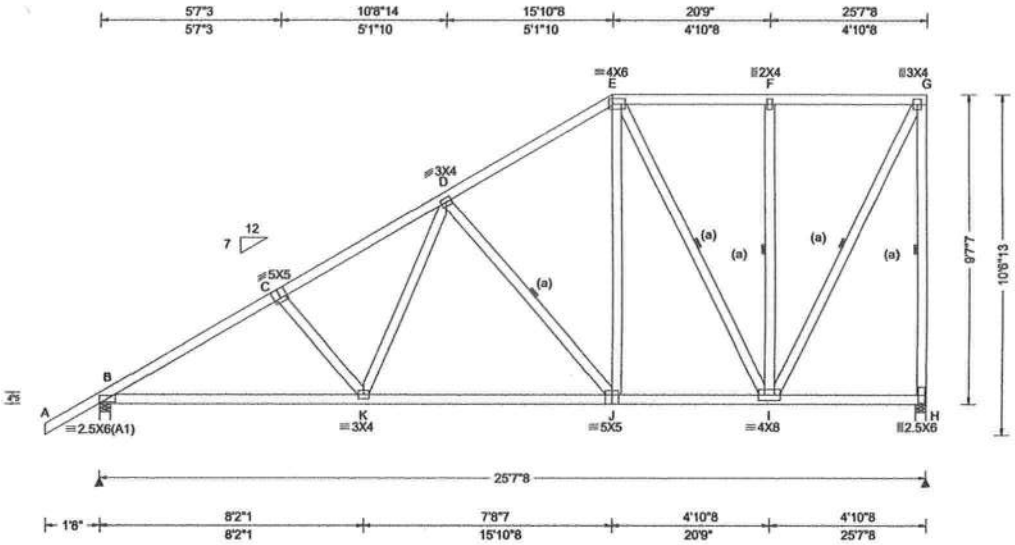

Loading Criteria (psf)	**Wind Criteria**	**Snow Criteria** (Pg,Pf in PSF)	**Defl/CSI Criteria**
TCLL: 20.00 TCDL: 10.00 BCLL: 0.00 BCDL: 10.00 Des Ld: 40.00 NCBCLL: 10.00 Soffit: 2.00 Load Duration: 1.25 Spacing: 24.0 "	Wind Std: ASCE 7-16 Speed: 130 mph Enclosure: Closed Risk Category: II EXP: C Kzt: NA Mean Height: 15.00 ft TCDL: 5.0 psf BCDL: 5.0 psf MWFRS Parallel Dist: h to 2h C&C Dist a: 3.00 ft Loc. from endwall: not in 9.00 ft GCpi: 0.18 Wind Duration: 1.60	Pg: NA Ct: NA CAT: NA Pf: NA Ce: NA Lu: NA Cs: NA Snow Duration: NA Building Code: FBC 7th Ed. 2020 Res. TPI Std: 2014 Rep Fac: Yes FT/RT:20(0)/10(0) Plate Type(s): WAVE	PP Deflection in loc L/defl L/# VERT(LL): 0.052 K 999 240 VERT(CL): 0.107 K 999 180 HORZ(LL): 0.018 C - - HORZ(TL): 0.036 C - - Creep Factor: 2.0 Max TC CSI: 0.308 Max BC CSI: 0.667 Max Web CSI: 0.940 VIEW Ver: 21.02.01.1214.12

▲ Maximum Reactions (lbs)

	Gravity			Non-Gravity		
Loc	R+	/ R-	/ Rh	/ Rw	/ U	/ RL
B	1189	/-	/-	/771	/44	/257
H	1055	/-	/-	/616	/185	/-

Wind reactions based on MWFRS
B Brg Wid = 4.0 Min Req = 1.5 (Truss)
H Brg Wid = 4.0 Min Req = 1.5 (Truss)
Bearings B & H are a rigid surface.
Members not listed have forces less than 375#

Maximum Top Chord Forces Per Ply (lbs)

Chords	Tens.	Comp.	Chords	Tens.	Comp.
B - C	340	-1672	E - F	235	-466
C - D	345	-1467	F - G	235	-466
D - E	312	-897			

Maximum Bot Chord Forces Per Ply (lbs)

Chords	Tens.	Comp.	Chords	Tens.	Comp.
B - K	1372	-555	J - I	699	-311
K - J	1051	-438			

Maximum Web Forces Per Ply (lbs)

Webs	Tens.	Comp.	Webs	Tens.	Comp.
K - D	454	-41	E - I	164	-503
D - J	200	-551	I - G	1005	-507
E - J	552	-94	G - H	570	-1014

Lumber

Top chord: 2x4 SP #2;
Bot chord: 2x4 SP #2;
Webs: 2x4 SP #3;

Bracing

(a) Continuous lateral restraint equally spaced on member.

Purlins

In lieu of structural panels use purlins to brace all flat TC @ 24" oc.

Wind

Wind loads based on MWFRS with additional C&C member design.

Right end vertical not exposed to wind pressure.

Wind loading based on both gable and hip roof types.

Additional Notes

The overall height of this truss excluding overhang is 9-7-7.

WILLIAM H. KRICK
LICENSE
No. 70861
STATE OF FLORIDA
PROFESSIONAL ENGINEER

COA #0278

05/11/2022

Florida Certificate of Product Approval #FL 1999

****WARNING**** READ AND FOLLOW ALL NOTES ON THIS DRAWING!
****IMPORTANT**** FURNISH THIS DRAWING TO ALL CONTRACTORS INCLUDING THE INSTALLERS

Trusses require extreme care in fabricating, handling, shipping, installing and bracing. Refer to and follow the latest edition of BCSI (Building Component Safety Information, by TPI and SBCA) for safety practices prior to performing these functions. Installers shall provide temporary bracing per BCSI. Unless noted otherwise, top chord shall have properly attached structural sheathing and bottom chord shall have a properly attached rigid ceiling. Locations shown for permanent lateral restraint of webs shall have bracing installed per BCSI sections B3, B7, or B10, as applicable. Apply plates to each face of truss and position as shown above and on the Joint Details, unless noted otherwise. Refer to drawings 160A-Z for standard plate positions. Refer to job's General Notes page for additional information.

Alpine, a division of ITW Building Components Group Inc. shall not be responsible for any deviation from this drawing, any failure to build the truss in conformance with ANSI/TPI 1, or for handling, shipping, installation and bracing of trusses. A seal on this drawing or cover page listing this drawing, indicates acceptance of professional engineering responsibility solely for the design shown. The suitability and use of this drawing for any structure is the responsibility of the Building Designer per ANSI/TPI 1 Sec.2.

For more information see these web sites: Alpine: alpineitw.com; TPI: tpinst.org; SBCA: sbcacomponents.com; ICC: iccsafe.org; AWC: awc.org

ALPINE AN ITW COMPANY
155 Harlem Ave
North Building, 4th Floor
Glenview, IL 60025

SEQN: 657741 COMN	Ply: 1	Job Number: 22-7559	Cust: R 215 JRef: 1Xff2150006 T45
FROM: CDM	Qty: 1	Judy Baughn	DrwNo: 131.22.0813.47980
		Truss Label: D10	KD / WHK 05/11/2022

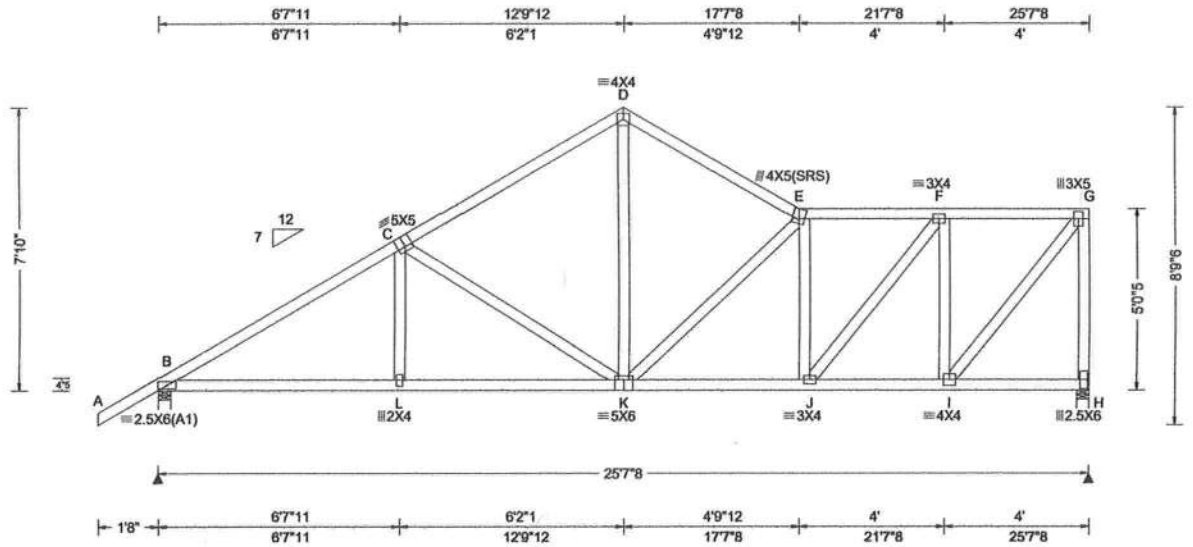

Loading Criteria (psf)

TCLL:	20.00
TCDL:	10.00
BCLL:	0.00
BCDL:	10.00
Des Ld:	40.00
NCBCLL:	10.00
Soffit:	2.00

Load Duration: 1.25
Spacing: 24.0 "

Wind Criteria
Wind Std: ASCE 7-16
Speed: 130 mph
Enclosure: Closed
Risk Category: II
EXP: C Kzt: NA
Mean Height: 15.00 ft
TCDL: 5.0 psf
BCDL: 5.0 psf
MWFRS Parallel Dist: h/2 to h
C&C Dist a: 3.00 ft
Loc. from endwall: not in 9.00 ft
GCpi: 0.18
Wind Duration: 1.60

Snow Criteria (Pg,Pf in PSF)
Pg: NA Ct: NA CAT: NA
Pf: NA Ce: NA
Lu: NA Cs: NA
Snow Duration: NA

Building Code:
FBC 7th Ed. 2020 Res.
TPI Std: 2014
Rep Fac: Yes
FT/RT:20(0)/10(0)
Plate Type(s):
WAVE

Defl/CSI Criteria

PP Deflection in	loc	L/defl	L/#
VERT(LL): 0.055	K	999	240
VERT(CL): 0.114	K	999	180
HORZ(LL): 0.021	I	-	-
HORZ(TL): 0.042	I	-	-

Creep Factor: 2.0
Max TC CSI: 0.413
Max BC CSI: 0.480
Max Web CSI: 0.520

VIEW Ver: 21.02.01.1214.12

▲ Maximum Reactions (lbs)

	Gravity			Non-Gravity		
Loc	R+	/ R-	/ Rh	/ Rw	/ U	/ RL
B	1189	/-	/-	/730	/191	/211
H	1055	/-	/-	/561	/199	/-

Wind reactions based on MWFRS
B Brg Wid = 4.0 Min Req = 1.5 (Truss)
H Brg Wid = 4.0 Min Req = 1.5 (Truss)
Bearings B & H are a rigid surface.
Members not listed have forces less than 375#

Maximum Top Chord Forces Per Ply (lbs)

Chords	Tens.	Comp.	Chords	Tens.	Comp.
B - C	369	-1661	E - F	420	-1210
C - D	359	-1164	F - G	304	-746
D - E	364	-1128			

Maximum Bot Chord Forces Per Ply (lbs)

Chords	Tens.	Comp.	Chords	Tens.	Comp.
B - L	1350	-402	K - J	1239	-430
L - K	1348	-403	J - I	798	-329

Maximum Web Forces Per Ply (lbs)

Webs	Tens.	Comp.	Webs	Tens.	Comp.
C - K	175	-513	J - F	685	-151
D - K	713	-210	F - I	416	-834
K - E	244	-450	I - G	1182	-481
E - J	165	-467	G - H	478	-1023

Lumber
Top chord: 2x4 SP #2;
Bot chord: 2x4 SP #2;
Webs: 2x4 SP #3;

Purlins
In lieu of structural panels use purlins to brace all flat TC @ 24" oc.

Wind
Wind loads based on MWFRS with additional C&C member design.
Right end vertical not exposed to wind pressure.
Wind loading based on both gable and hip roof types.

Additional Notes
The overall height of this truss excluding overhang is 7-10-0.

WILLIAM H. KRICK
LICENSE
No. 70861
STATE OF FLORIDA
PROFESSIONAL ENGINEER

COA #0278
05/11/2022
Florida Certificate of Product Approval #FL 1999

****WARNING**** READ AND FOLLOW ALL NOTES ON THIS DRAWING!
****IMPORTANT**** FURNISH THIS DRAWING TO ALL CONTRACTORS INCLUDING THE INSTALLERS

Trusses require extreme care in fabricating, handling, shipping, installing and bracing. Refer to and follow the latest edition of BCSI (Building Component Safety Information, by TPI and SBCA) for safety practices prior to performing these functions. Installers shall provide temporary bracing per BCSI. Unless noted otherwise, top chord shall have properly attached structural sheathing and bottom chord shall have a properly attached rigid ceiling. Locations shown for permanent lateral restraint of webs shall have bracing installed per BCSI sections B3, B7, or B10, as applicable. Apply plates to each face of truss and position as shown above and on the Joint Details, unless noted otherwise. Refer to drawings 160A-Z for standard plate positions. Refer to job's General Notes page for additional information.

Alpine, a division of ITW Building Components Group Inc. shall not be responsible for any deviation from this drawing, any failure to build the truss in conformance with ANSI/TPI 1, or for handling, shipping, installation and bracing of trusses. A seal on this drawing or cover page listing this drawing, indicates acceptance of professional engineering responsibility solely for the design shown. The suitability and use of this drawing for any structure is the responsibility of the Building Designer per ANSI/TPI 1 Sec.2.

For more information see these web sites: Alpine: alpineitw.com; TPI: tpinst.org; SBCA: sbcacomponents.com; ICC: iccsafe.org; AWC: awc.org

ALPINE AN ITW COMPANY
155 Harlem Ave
North Building, 4th Floor
Glenview, IL 60025

SEQN: 657744 COMN	Ply: 1	**Job Number:** 22-7559	Cust: R 215 JRef: 1Xff2150006 T38
FROM: CDM	Qty: 1	Judy Baughn	DrwNo: 131.22.0813.46337
		Truss Label: D11	KD / WHK 05/11/2022

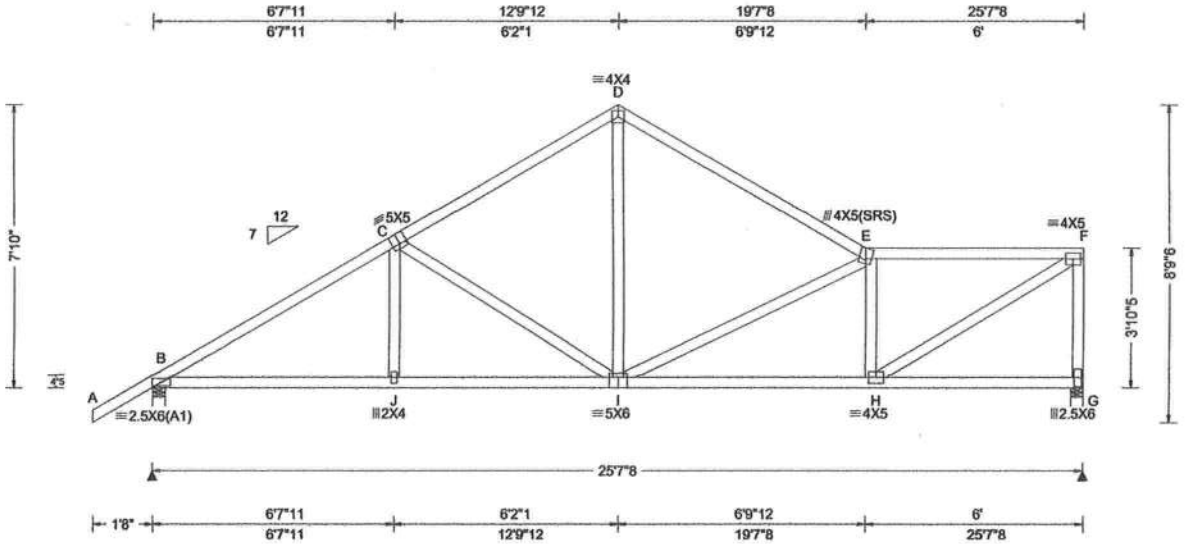

Loading Criteria (psf)

TCLL:	20.00
TCDL:	10.00
BCLL:	0.00
BCDL:	10.00
Des Ld:	40.00
NCBCLL:	10.00
Soffit:	2.00

Load Duration: 1.25
Spacing: 24.0 "

Wind Criteria
Wind Std: ASCE 7-16
Speed: 130 mph
Enclosure: Closed
Risk Category: II
EXP: C Kzt: NA
Mean Height: 15.00 ft
TCDL: 5.0 psf
BCDL: 5.0 psf
MWFRS Parallel Dist: h/2 to h
C&C Dist a: 3.00 ft
Loc. from endwall: not in 4.50 ft
GCpi: 0.18
Wind Duration: 1.60

Snow Criteria (Pg,Pf in PSF)
Pg: NA Ct: NA CAT: NA
Pf: NA Ce: NA
Lu: NA Cs: NA
Snow Duration: NA

Building Code:
FBC 7th Ed. 2020 Res.
TPI Std: 2014
Rep Fac: Yes
FT/RT:20(0)/10(0)
Plate Type(s):
WAVE

Defl/CSI Criteria

PP Deflection in	loc	L/defl	L/#
VERT(LL): 0.060	I	999	240
VERT(CL): 0.124	I	999	180
HORZ(LL): 0.021	G	-	-
HORZ(TL): 0.043	G	-	-

Creep Factor: 2.0
Max TC CSI: 0.490
Max BC CSI: 0.539
Max Web CSI: 0.655

VIEW Ver: 21.02.01.1214.12

▲ Maximum Reactions (lbs)

	Gravity			Non-Gravity		
Loc	R+	/ R-	/ Rh	/ Rw	/ U	/ RL
B	1189	/-	/-	/722	/197	/211
G	1055	/-	/-	/549	/190	/-

Wind reactions based on MWFRS
B Brg Wid = 4.0 Min Req = 1.5 (Truss)
G Brg Wid = 4.0 Min Req = 1.5 (Truss)
Bearings B & G are a rigid surface.
Members not listed have forces less than 375#

Maximum Top Chord Forces Per Ply (lbs)

Chords	Tens.	Comp.	Chords	Tens.	Comp.
B - C	343	-1658	D - E	330	-1182
C - D	333	-1170	E - F	417	-1374

Maximum Bot Chord Forces Per Ply (lbs)

Chords	Tens.	Comp.	Chords	Tens.	Comp.
B - J	1346	-336	I - H	1432	-444
J - I	1344	-337			

Maximum Web Forces Per Ply (lbs)

Webs	Tens.	Comp.	Webs	Tens.	Comp.
C - I	173	-496	E - H	330	-717
D - I	673	-161	H - F	1605	-481
I - E	284	-570	F - G	420	-1007

Lumber

Top chord: 2x4 SP #2;
Bot chord: 2x4 SP #2;
Webs: 2x4 SP #3;

Purlins

In lieu of structural panels use purlins to brace all flat TC @ 24" oc.

Wind

Wind loads based on MWFRS with additional C&C member design.

Right end vertical not exposed to wind pressure.

Wind loading based on both gable and hip roof types.

Additional Notes

The overall height of this truss excluding overhang is 7-10-0.

COA #0278

Florida Certificate of Product Approval #FL 1999

05/11/2022

****WARNING**** READ AND FOLLOW ALL NOTES ON THIS DRAWING!
****IMPORTANT**** FURNISH THIS DRAWING TO ALL CONTRACTORS INCLUDING THE INSTALLERS

Trusses require extreme care in fabricating, handling, shipping, installing and bracing. Refer to and follow the latest edition of BCSI (Building Component Safety Information, by TPI and SBCA) for safety practices prior to performing these functions. Installers shall provide temporary bracing per BCSI. Unless noted otherwise, top chord shall have properly attached structural sheathing and bottom chord shall have a properly attached rigid ceiling. Locations shown for permanent lateral restraint of webs shall have bracing installed per BCSI sections B3, B7, or B10, as applicable. Apply plates to each face of truss and position as shown above and on the Joint Details, unless noted otherwise. Refer to drawings 160A-Z for standard plate positions. Refer to job's General Notes page for additional information.

Alpine, a division of ITW Building Components Group Inc. shall not be responsible for any deviation from this drawing, any failure to build the truss in conformance with ANSI/TPI 1, or for handling, shipping, installation and bracing of trusses. A seal on this drawing or cover page listing this drawing, indicates acceptance of professional engineering responsibility solely for the design shown. The suitability and use of this drawing for any structure is the responsibility of the Building Designer per ANSI/TPI 1 Sec.2.

For more information see these web sites: Alpine: alpineitw.com; TPI: tpinst.org; SBCA: sbcacomponents.com; ICC: iccsafe.org; AWC: awc.org

ALPINE
AN ITW COMPANY
155 Harlem Ave
North Building, 4th Floor
Glenview, IL 60025

SEQN: 657747 COMN	Ply: 1	Job Number: 22-7559	Cust: R 215 JRef: 1Xff2150006 T44
FROM: CDM	Qty: 1	Judy Baughn	DrwNo: 131.22.0813.44613
		Truss Label: D12	KD / WHK 05/11/2022

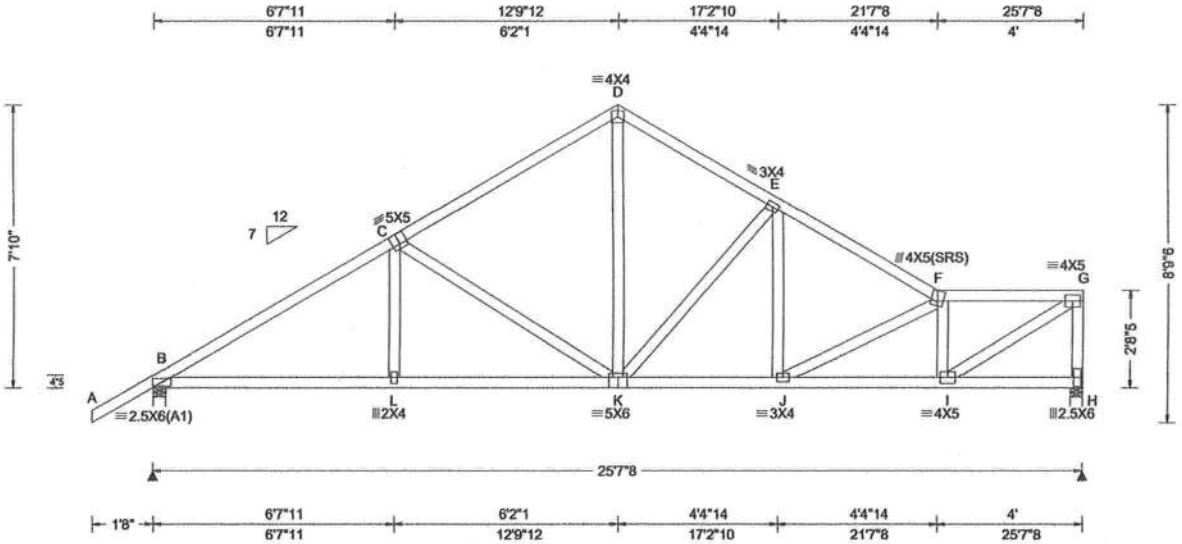

Loading Criteria (psf)

TCLL:	20.00
TCDL:	10.00
BCLL:	0.00
BCDL:	10.00
Des Ld:	40.00
NCBCLL:	10.00
Soffit:	2.00

Load Duration: 1.25
Spacing: 24.0 "

Wind Criteria
Wind Std: ASCE 7-16
Speed: 130 mph
Enclosure: Closed
Risk Category: II
EXP: C Kzt: NA
Mean Height: 15.00 ft
TCDL: 5.0 psf
BCDL: 5.0 psf
MWFRS Parallel Dist: 0 to h/2
C&C Dist a: 3.00 ft
Loc. from endwall: not in 4.50 ft
GCpi: 0.18
Wind Duration: 1.60

Snow Criteria (Pg,Pf in PSF)
Pg: NA Ct: NA CAT: NA
Pf: NA Ce: NA
Lu: NA Cs: NA
Snow Duration: NA

Building Code:
FBC 7th Ed. 2020 Res.
TPI Std: 2014
Rep Fac: Yes
FT/RT:20(0)/10(0)
Plate Type(s):
WAVE

Defl/CSI Criteria

PP Deflection in	loc	L/defl	L/#
VERT(LL): 0.060	K	999	240
VERT(CL): 0.124	K	999	180
HORZ(LL): 0.023	H	-	-
HORZ(TL): 0.047	H	-	-

Creep Factor: 2.0
Max TC CSI: 0.418
Max BC CSI: 0.485
Max Web CSI: 0.639

VIEW Ver: 21.02.01.1214.12

▲ Maximum Reactions (lbs)

	Gravity			Non-Gravity		
Loc	R+	/ R-	/ Rh	/ Rw	/ U	/ RL
B	1189	/-	/-	/716	/202	/211
H	1055	/-	/-	/554	/182	/-

Wind reactions based on MWFRS
B Brg Wid = 4.0 Min Req = 1.5 (Truss)
H Brg Wid = 4.0 Min Req = 1.5 (Truss)
Bearings B & H are a rigid surface.
Members not listed have forces less than 375#

Maximum Top Chord Forces Per Ply (lbs)

Chords	Tens.	Comp.	Chords	Tens.	Comp.
B - C	326	-1662	E - F	355	-1488
C - D	314	-1162	F - G	366	-1416
D - E	323	-1123			

Maximum Bot Chord Forces Per Ply (lbs)

Chords	Tens.	Comp.	Chords	Tens.	Comp.
B - L	1351	-279	K - J	1216	-246
L - K	1349	-280	J - I	1517	-401

Maximum Web Forces Per Ply (lbs)

Webs	Tens.	Comp.	Webs	Tens.	Comp.
C - K	179	-518	F - I	285	-838
D - K	740	-177	I - G	1676	-430
K - E	176	-460	G - H	345	-1019

Lumber
Top chord: 2x4 SP #2;
Bot chord: 2x4 SP #2;
Webs: 2x4 SP #3;

Purlins
In lieu of structural panels use purlins to brace all flat TC @ 24" oc.

Wind
Wind loads based on MWFRS with additional C&C member design.
Right end vertical not exposed to wind pressure.
Wind loading based on both gable and hip roof types.

Additional Notes
The overall height of this truss excluding overhang is 7-10-0.

WILLIAM H. KRICK
LICENSE
No. 70861
STATE OF FLORIDA
PROFESSIONAL ENGINEER

COA #0278
05/11/2022
Florida Certificate of Product Approval #FL 1999

****WARNING**** READ AND FOLLOW ALL NOTES ON THIS DRAWING!
****IMPORTANT**** FURNISH THIS DRAWING TO ALL CONTRACTORS INCLUDING THE INSTALLERS

Trusses require extreme care in fabricating, handling, shipping, installing and bracing. Refer to and follow the latest edition of BCSI (Building Component Safety Information, by TPI and SBCA) for safety practices prior to performing these functions. Installers shall provide temporary bracing per BCSI. Unless noted otherwise, top chord shall have properly attached structural sheathing and bottom chord shall have a properly attached rigid ceiling. Locations shown for permanent lateral restraint of webs shall have bracing installed per BCSI sections B3, B7, or B10, as applicable. Apply plates to each face of truss and position as shown above and on the Joint Details, unless noted otherwise. Refer to drawings 160A-Z for standard plate positions. Refer to job's General Notes page for additional information.

Alpine, a division of ITW Building Components Group Inc. shall not be responsible for any deviation from this drawing, any failure to build the truss in conformance with ANSI/TPI 1, or for handling, shipping, installation and bracing of trusses. A seal on this drawing or cover page listing this drawing, indicates acceptance of professional engineering responsibility solely for the design shown. The suitability and use of this drawing for any structure is the responsibility of the Building Designer per ANSI/TPI 1 Sec.2.

For more information see these web sites: Alpine: alpineitw.com; TPI: tpinst.org; SBCA: sbcacomponents.com; ICC: iccsafe.org; AWC: awc.org

ALPINE
AN ITW COMPANY
155 Harlem Ave
North Building, 4th Floor
Glenview, IL 60025

SEQN: 657750 COMN	Ply: 1	**Job Number:** 22-7559	Cust: R 215 JRef: 1Xff2150006 T47
FROM: CDM	Qty: 1	Judy Baughn	DrwNo: 131.22.0813.42793
		Truss Label: D13	KD / WHK 05/11/2022

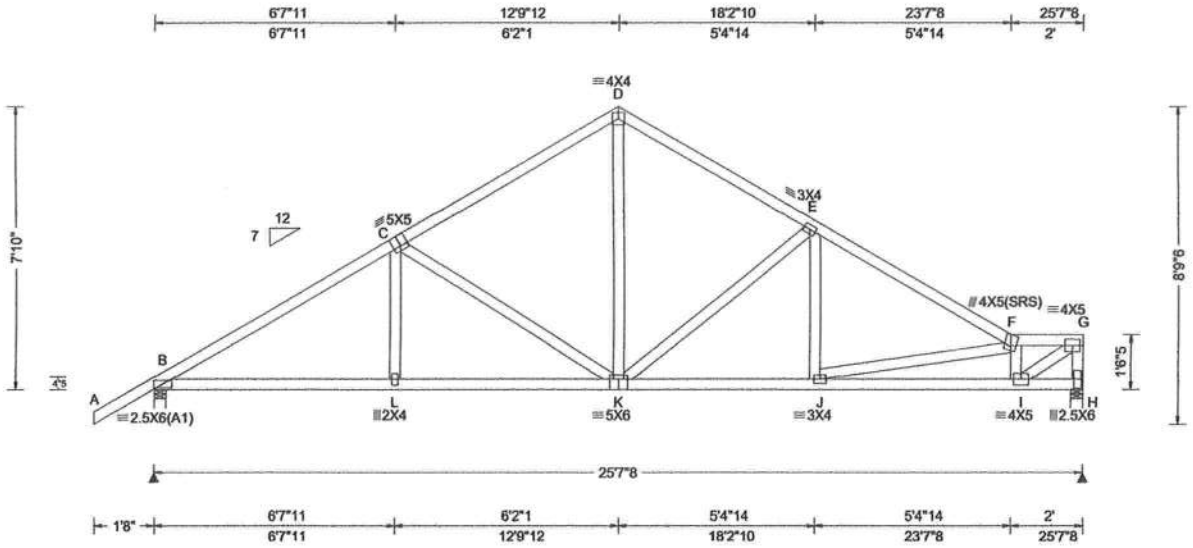

Loading Criteria (psf)

TCLL:	20.00
TCDL:	10.00
BCLL:	0.00
BCDL:	10.00
Des Ld:	40.00
NCBCLL:	10.00
Soffit:	2.00

Load Duration: 1.25
Spacing: 24.0 "

Wind Criteria
Wind Std: ASCE 7-16
Speed: 130 mph
Enclosure: Closed
Risk Category: II
EXP: C Kzt: NA
Mean Height: 15.00 ft
TCDL: 5.0 psf
BCDL: 5.0 psf
MWFRS Parallel Dist: 0 to h/2
C&C Dist a: 3.00 ft
Loc. from endwall: Any
GCpi: 0.18
Wind Duration: 1.60

Snow Criteria (Pg,Pf in PSF)
Pg: NA Ct: NA CAT: NA
Pf: NA Ce: NA
Lu: NA Cs: NA
Snow Duration: NA

Building Code:
FBC 7th Ed. 2020 Res.
TPI Std: 2014
Rep Fac: Yes
FT/RT:20(0)/10(0)
Plate Type(s):
WAVE

Defl/CSI Criteria

PP Deflection in	loc	L/defl	L/#
VERT(LL): 0.059	K	999	240
VERT(CL): 0.122	K	999	180
HORZ(LL): 0.026	H	-	-
HORZ(TL): 0.054	H	-	-

Creep Factor: 2.0
Max TC CSI: 0.414
Max BC CSI: 0.480
Max Web CSI: 0.657

VIEW Ver: 21.02.01.1214.12

▲ Maximum Reactions (lbs)

	Gravity		Non-Gravity		
Loc	R+ / R-	/ Rh	/ Rw	/ U	/ RL
B	1189 / -	/ -	/712	/204	/211
H	1055 / -	/ -	/580	/176	/ -

Wind reactions based on MWFRS
B Brg Wid = 4.0 Min Req = 1.5 (Truss)
H Brg Wid = 4.0 Min Req = 1.5 (Truss)
Bearings B & H are a rigid surface.
Members not listed have forces less than 375#

Maximum Top Chord Forces Per Ply (lbs)

Chords	Tens.	Comp.	Chords	Tens.	Comp.
B - C	469	-1662	E - F	484	-1604
C - D	428	-1163	F - G	432	-1404
D - E	439	-1148			

Maximum Bot Chord Forces Per Ply (lbs)

Chords	Tens.	Comp.	Chords	Tens.	Comp.
B - L	1350	-363	K - J	1310	-341
L - K	1348	-365	J - I	1630	-520

Maximum Web Forces Per Ply (lbs)

Webs	Tens.	Comp.	Webs	Tens.	Comp.
C - K	247	-514	F - I	379	-978
D - K	722	-229	I - G	1724	-530
K - E	246	-510	G - H	340	-1033

Lumber

Top chord: 2x4 SP #2;
Bot chord: 2x4 SP #2;
Webs: 2x4 SP #3;

Purlins

In lieu of structural panels use purlins to brace all flat TC @ 24" oc.

Wind

Wind loads based on MWFRS with additional C&C member design.

Right end vertical not exposed to wind pressure.

Wind loading based on both gable and hip roof types.

Additional Notes

The overall height of this truss excluding overhang is 7-10-0.

WILLIAM H. KRICK
LICENSE
No. 70861
STATE OF FLORIDA
PROFESSIONAL ENGINEER

COA #0278

05/11/2022

Florida Certificate of Product Approval #FL 1999

****WARNING**** READ AND FOLLOW ALL NOTES ON THIS DRAWING!
****IMPORTANT**** FURNISH THIS DRAWING TO ALL CONTRACTORS INCLUDING THE INSTALLERS

Trusses require extreme care in fabricating, handling, shipping, installing and bracing. Refer to and follow the latest edition of BCSI (Building Component Safety Information, by TPI and SBCA) for safety practices prior to performing these functions. Installers shall provide temporary bracing per BCSI. Unless noted otherwise, top chord shall have properly attached structural sheathing and bottom chord shall have a properly attached rigid ceiling. Locations shown for permanent lateral restraint of webs shall have bracing installed per BCSI sections B3, B7, or B10, as applicable. Apply plates to each face of truss and position as shown above and on the Joint Details, unless noted otherwise. Refer to drawings 160A-Z for standard plate positions. Refer to job's General Notes page for additional information.

Alpine, a division of ITW Building Components Group Inc. shall not be responsible for any deviation from this drawing, any failure to build the truss in conformance with ANSI/TPI 1, or for handling, shipping, installation and bracing of trusses. A seal on this drawing or cover page listing this drawing, indicates acceptance of professional engineering responsibility solely for the design shown. The suitability and use of this drawing for any structure is the responsibility of the Building Designer per ANSI/TPI 1 Sec.2.

For more information see these web sites: Alpine: alpineitw.com; TPI: tpinst.org; SBCA: sbcacomponents.com; ICC: iccsafe.org; AWC: awc.org

ALPINE
AN ITW COMPANY
155 Harlem Ave
North Building, 4th Floor
Glenview, IL 60025

SEQN: 656925 GABL FROM: CDM	Ply: 1 Qty: 1	**Job Number:** 22-7559 Judy Baughn **Truss Label:** D14	Cust: R 215 JRef: 1Xff2150006 T34 DrwNo: 131.22.0813.40353 KD / WHK 05/11/2022

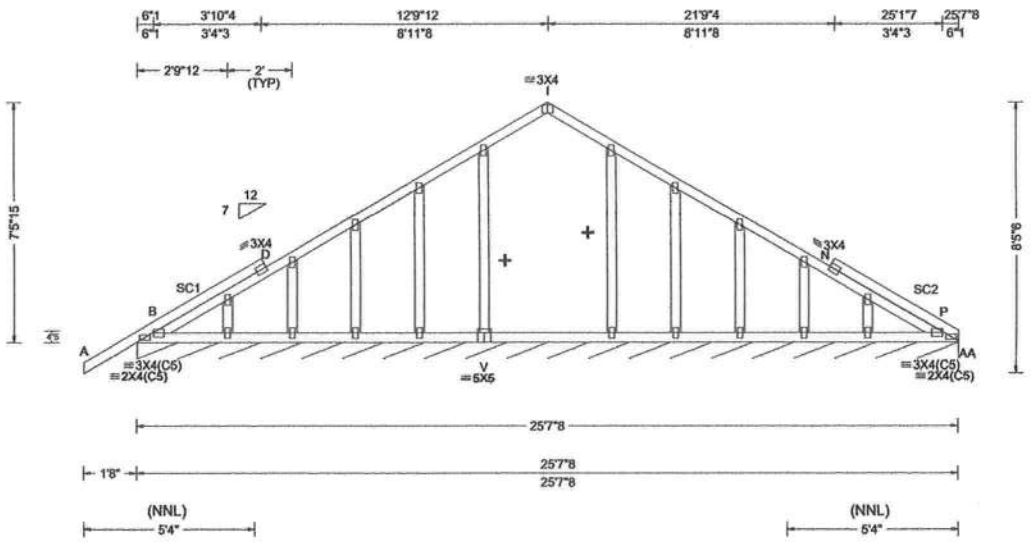

Loading Criteria (psf)	**Wind Criteria**	**Snow Criteria** (Pg,Pf in PSF)	**Defl/CSI Criteria**	**▲Maximum Reactions (lbs), or *=PLF**
TCLL: 20.00 TCDL: 10.00 BCLL: 0.00 BCDL: 10.00 Des Ld: 40.00 NCBCLL: 10.00 Soffit: 2.00 Load Duration: 1.25 Spacing: 24.0 "	Wind Std: ASCE 7-16 Speed: 130 mph Enclosure: Closed Risk Category: II EXP: C Kzt: NA Mean Height: 15.00 ft TCDL: 5.0 psf BCDL: 5.0 psf MWFRS Parallel Dist: 0 to h/2 C&C Dist a: 3.00 ft Loc. from endwall: Any GCpi: 0.18 Wind Duration: 1.60	Pg: NA Ct: NA CAT: NA Pf: NA Ce: NA Lu: NA Cs: NA Snow Duration: NA Building Code: FBC 7th Ed. 2020 Res. TPI Std: 2014 Rep Fac: Yes FT/RT:20(0)/10(0) Plate Type(s): WAVE	PP Deflection in loc L/defl L/# VERT(LL): 0.005 I 999 240 VERT(CL): 0.008 I 999 180 HORZ(LL): 0.004 N - - HORZ(TL): 0.005 N - - Creep Factor: 2.0 Max TC CSI: 0.318 Max BC CSI: 0.095 Max Web CSI: 0.108 VIEW Ver: 21.02.01.1214.12	Gravity / Non-Gravity Loc R+ / R- / Rh / Rw / U / RL AA*88 /- /- /47 /14 /9 Wind reactions based on MWFRS AA Brg Wid = 307 Min Req = - Bearing B is a rigid surface. Members not listed have forces less than 375#

Lumber

Top chord: 2x4 SP #2;
Bot chord: 2x4 SP #2;
Webs: 2x4 SP #3;
Stack Chord: SC1 2x4 SP #2;
Stack Chord: SC2 2x4 SP #2;

Plating Notes

All plates are 2X4 except as noted.

Wind

Wind loads based on MWFRS with additional C&C member design.

Wind loading based on both gable and hip roof types.

Additional Notes

See DWGS A14015ENC160118 & GBLLETIN0118 for gable wind bracing and other requirements.

Stacked top chord must NOT be notched or cut in area (NNL). Dropped top chord braced at 24" oc intervals. Attach stacked top chord (SC) to dropped top chord in notchable area using 3x4 tie-plates 24" oc. Center plate on stacked/dropped chord interface, plate length perpendicular to chord length. Splice top chord in notchable area using 3x6.

The overall height of this truss excluding overhang is 7-5-15.

+ Member to be laterally braced for horizontal wind loads. bracing system to be desiged and furnished by others.

WILLIAM H. KRICK
LICENSE
No. 70861
STATE OF FLORIDA
PROFESSIONAL ENGINEER

COA #0278

05/11/2022

Florida Certificate of Product Approval #FL 1999

****WARNING**** READ AND FOLLOW ALL NOTES ON THIS DRAWING!
****IMPORTANT**** FURNISH THIS DRAWING TO ALL CONTRACTORS INCLUDING THE INSTALLERS

Trusses require extreme care in fabricating, handling, shipping, installing and bracing. Refer to and follow the latest edition of BCSI (Building Component Safety Information, by TPI and SBCA) for safety practices prior to performing these functions. Installers shall provide temporary bracing per BCSI. Unless noted otherwise, top chord shall have properly attached structural sheathing and bottom chord shall have a properly attached rigid ceiling. Locations shown for permanent lateral restraint of webs shall have bracing installed per BCSI sections B3, B7, or B10, as applicable. Apply plates to each face of truss and position as shown above and on the Joint Details, unless noted otherwise. Refer to drawings 160A-Z for standard plate positions. Refer to job's General Notes page for additional information.

Alpine, a division of ITW Building Components Group Inc. shall not be responsible for any deviation from this drawing, any failure to build the truss in conformance with ANSI/TPI 1, or for handling, shipping, installation and bracing of trusses. A seal on this drawing or cover page listing this drawing, indicates acceptance of professional engineering responsibility solely for the design shown. The suitability and use of this drawing for any structure is the responsibility of the Building Designer per ANSI/TPI 1 Sec.2.

For more information see these web sites: Alpine: alpineitw.com; TPI: tpinst.org; SBCA: sbcacomponents.com; ICC: iccsafe.org; AWC: awc.org

ALPINE
AN ITW COMPANY
155 Harlem Ave
North Building, 4th Floor
Glenview, IL 60025

SEQN: 656881 HIP_ FROM: CDM	Ply: 1 Qty: 1	**Job Number:** 22-7559 Judy Baughn **Truss Label:** HJ01		Cust: R 215 JRef: 1Xff2150006 T40 DrwNo: 131.22.0812.08730 KD / WHK 05/11/2022

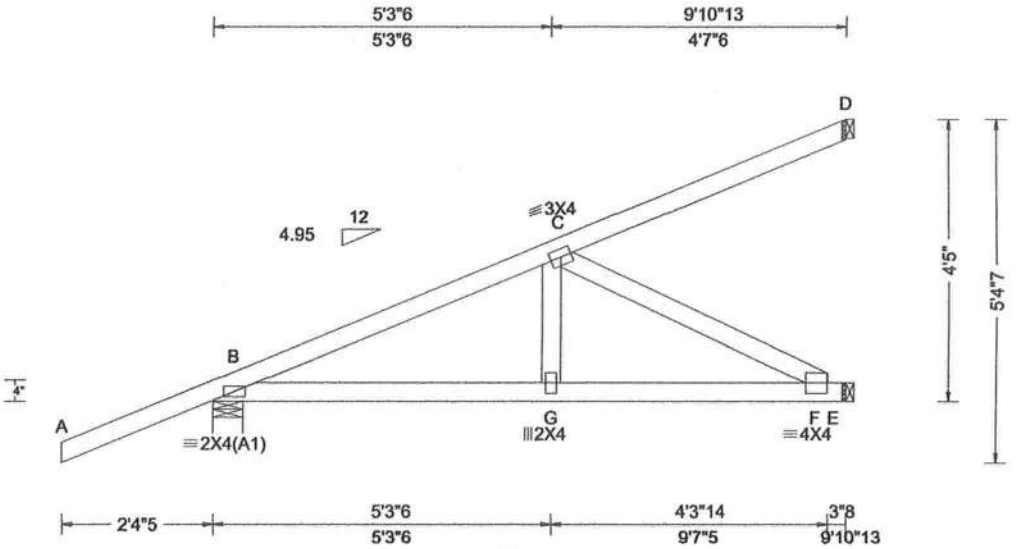

Loading Criteria (psf)	Wind Criteria	Snow Criteria (Pg,Pf in PSF)	Defl/CSI Criteria
TCLL: 20.00 TCDL: 10.00 BCLL: 0.00 BCDL: 10.00 Des Ld: 40.00 NCBCLL: 10.00 Soffit: 2.00 Load Duration: 1.25 Spacing: 24.0 "	Wind Std: ASCE 7-16 Speed: 130 mph Enclosure: Closed Risk Category: II EXP: C Kzt: NA Mean Height: 15.00 ft TCDL: 5.0 psf BCDL: 5.0 psf MWFRS Parallel Dist: 0 to h/2 C&C Dist a: 3.00 ft Loc. from endwall: not in 4.50 ft GCpi: 0.18 Wind Duration: 1.60	Pg: NA Ct: NA CAT: NA Pf: NA Ce: NA Lu: NA Cs: NA Snow Duration: NA Building Code: FBC 7th Ed. 2020 Res. TPI Std: 2014 Rep Fac: Varies by Ld Case FT/RT:20(0)/10(0) Plate Type(s): WAVE	PP Deflection in loc L/defl L/# VERT(LL): 0.020 G 999 240 VERT(CL): 0.038 G 999 180 HORZ(LL): -0.005 B - - HORZ(TL): 0.009 F - - Creep Factor: 2.0 Max TC CSI: 0.584 Max BC CSI: 0.639 Max Web CSI: 0.298 VIEW Ver: 21.02.01.1214.12

▲ Maximum Reactions (lbs)

	Gravity			Non-Gravity		
Loc	R+	/ R-	/ Rh	/ Rw	/ U	/ RL
B	379	/-	/-	/-	/249	/-
E	327	/-	/-	/-	/94	/-
D	79	/-	/-	/-	/29	/-

Wind reactions based on MWFRS
B Brg Wid = 5.7 Min Req = 1.5 (Truss)
E Brg Wid = 1.5 Min Req = -
D Brg Wid = 1.5 Min Req = -
Bearing B is a rigid surface.
Members not listed have forces less than 375#

Maximum Top Chord Forces Per Ply (lbs)

Chords	Tens.	Comp.
B - C	277	-590

Maximum Bot Chord Forces Per Ply (lbs)

Chords	Tens.	Comp.	Chords	Tens.	Comp.
B - G	556	-218	G - F	546	-218

Maximum Web Forces Per Ply (lbs)

Webs	Tens.	Comp.
C - F	246	-618

Lumber

Top chord: 2x4 SP #2;
Bot chord: 2x4 SP #2;
Webs: 2x4 SP #3;

Special Loads

------(Lumber Dur.Fac.=1.25 / Plate Dur.Fac.=1.25)

TC: From	0 plf at	-2.36 to	62 plf at	0.00
TC: From	2 plf at	0.00 to	2 plf at	9.90
BC: From	0 plf at	-2.36 to	4 plf at	0.00
BC: From	2 plf at	0.00 to	2 plf at	9.90

TC: -58 lb Conc. Load at 1.48
TC: 118 lb Conc. Load at 4.31
TC: 254 lb Conc. Load at 7.13
BC: 4 lb Conc. Load at 1.48
BC: 97 lb Conc. Load at 4.31
BC: 179 lb Conc. Load at 7.13

Wind

Wind loads and reactions based on MWFRS.

Wind loading based on both gable and hip roof types.

Additional Notes

The overall height of this truss excluding overhang is 4-5-0.

WILLIAM H. KRICK
LICENSE
No. 70861
STATE OF FLORIDA
PROFESSIONAL ENGINEER

COA #0278

05/11/2022

Florida Certificate of Product Approval #FL 1999

****WARNING**** READ AND FOLLOW ALL NOTES ON THIS DRAWING!
****IMPORTANT**** FURNISH THIS DRAWING TO ALL CONTRACTORS INCLUDING THE INSTALLERS

Trusses require extreme care in fabricating, handling, shipping, installing and bracing. Refer to and follow the latest edition of BCSI (Building Component Safety Information, by TPI and SBCA) for safety practices prior to performing these functions. Installers shall provide temporary bracing per BCSI. Unless noted otherwise, top chord shall have properly attached structural sheathing and bottom chord shall have a properly attached rigid ceiling. Locations shown for permanent lateral restraint of webs shall have bracing installed per BCSI sections B3, B7, or B10, as applicable. Apply plates to each face of truss and position as shown above and on the Joint Details, unless noted otherwise. Refer to drawings 160A-Z for standard plate positions. Refer to job's General Notes page for additional information.

Alpine, a division of ITW Building Components Group Inc. shall not be responsible for any deviation from this drawing, any failure to build the truss in conformance with ANSI/TPI 1, or for handling, shipping, installation and bracing of trusses. A seal on this drawing or cover page listing this drawing, indicates acceptance of professional engineering responsibility solely for the design shown. The suitability and use of this drawing for any structure is the responsibility of the Building Designer per ANSI/TPI 1 Sec.2.

For more information see these web sites: Alpine: alpineitw.com; TPI: tpinst.org; SBCA: sbcacomponents.com; ICC: iccsafe.org; AWC: awc.org

ALPINE
AN ITW COMPANY
155 Harlem Ave
North Building, 4th Floor
Glenview, IL 60025

SEQN: 656883 HIP_ FROM: CDM	Ply: 1 Qty: 1	**Job Number:** 22-7559 Judy Baughn **Truss Label:** HJ02	Cust: R 215 JRef: 1Xff2150006 T35 DrwNo: 131.22.0811.57737 KD / WHK 05/11/2022

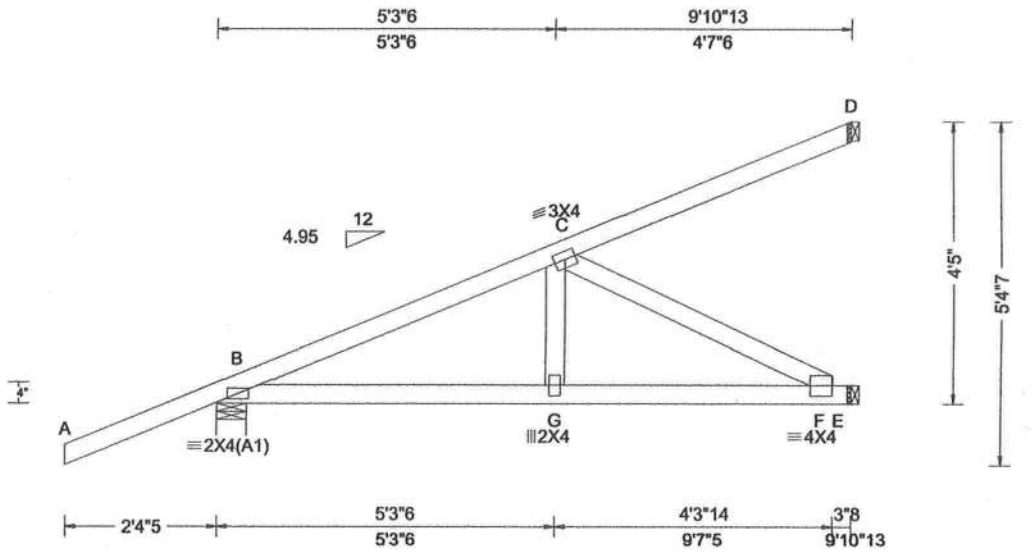

Loading Criteria (psf)	Wind Criteria	Snow Criteria (Pg,Pf in PSF)	Defl/CSI Criteria
TCLL: 20.00 TCDL: 10.00 BCLL: 0.00 BCDL: 10.00 Des Ld: 40.00 NCBCLL: 10.00 Soffit: 2.00 Load Duration: 1.25 Spacing: 24.0 "	Wind Std: ASCE 7-16 Speed: 130 mph Enclosure: Closed Risk Category: II EXP: C Kzt: NA Mean Height: 15.00 ft TCDL: 5.0 psf BCDL: 5.0 psf MWFRS Parallel Dist: 0 to h/2 C&C Dist a: 3.00 ft Loc. from endwall: not in 4.50 ft GCpi: 0.18 Wind Duration: 1.60	Pg: NA Ct: NA CAT: NA Pf: NA Ce: NA Lu: NA Cs: NA Snow Duration: NA Building Code: FBC 7th Ed. 2020 Res. TPI Std: 2014 Rep Fac: Varies by Ld Case FT/RT:20(0)/10(0) Plate Type(s): WAVE	PP Deflection in loc L/defl L/# VERT(LL): 0.021 G 999 240 VERT(CL): 0.040 G 999 180 HORZ(LL): 0.005 F - - HORZ(TL): 0.010 F - - Creep Factor: 2.0 Max TC CSI: 0.601 Max BC CSI: 0.662 Max Web CSI: 0.322 VIEW Ver: 21.02.01.1214.12

▲ Maximum Reactions (lbs)

	Gravity			Non-Gravity		
Loc	R+	/ R-	/ Rh	/ Rw	/ U	/ RL
B	379	/-	/-	/-	/254	/-
E	350	/-	/-	/-	/101	/-
D	82	/-	/-	/-	/30	/-

Wind reactions based on MWFRS
B Brg Wid = 5.7 Min Req = 1.5 (Truss)
E Brg Wid = 1.5 Min Req = -
D Brg Wid = 1.5 Min Req = -
Bearing B is a rigid surface.
Members not listed have forces less than 375#

Maximum Top Chord Forces Per Ply (lbs)

Chords	Tens.	Comp.
B - C	290	-639

Maximum Bot Chord Forces Per Ply (lbs)

Chords	Tens.	Comp.	Chords	Tens.	Comp.
B - G	600	-229	G - F	590	-229

Maximum Web Forces Per Ply (lbs)

Webs	Tens.	Comp.
C - F	259	-668

Lumber

Top chord: 2x4 SP #2;
Bot chord: 2x4 SP #2;
Webs: 2x4 SP #3;

Special Loads

-----(Lumber Dur.Fac.=1.25 / Plate Dur.Fac.=1.25)

TC: From	0 plf at	-2.36 to	62 plf at	0.00
TC: From	2 plf at	0.00 to	2 plf at	9.90
BC: From	0 plf at	-2.36 to	4 plf at	0.00
BC: From	2 plf at	0.00 to	2 plf at	9.90

TC: -58 lb Conc. Load at 1.48
TC: 141 lb Conc. Load at 4.31
TC: 267 lb Conc. Load at 7.13
BC: 4 lb Conc. Load at 1.48
BC: 103 lb Conc. Load at 4.31
BC: 183 lb Conc. Load at 7.13

Wind

Wind loads and reactions based on MWFRS.

Wind loading based on both gable and hip roof types.

Additional Notes

The overall height of this truss excluding overhang is 4-5-0.

WILLIAM H. KRICK
LICENSE
No. 70861
STATE OF FLORIDA
PROFESSIONAL ENGINEER

COA #0278

Florida Certificate of Product Approval #FL 1999

06/11/2022

****WARNING**** READ AND FOLLOW ALL NOTES ON THIS DRAWING!
****IMPORTANT**** FURNISH THIS DRAWING TO ALL CONTRACTORS INCLUDING THE INSTALLERS

Trusses require extreme care in fabricating, handling, shipping, installing and bracing. Refer to and follow the latest edition of BCSI (Building Component Safety Information, by TPI and SBCA) for safety practices prior to performing these functions. Installers shall provide temporary bracing per BCSI. Unless noted otherwise, top chord shall have properly attached structural sheathing and bottom chord shall have a properly attached rigid ceiling. Locations shown for permanent lateral restraint of webs shall have bracing installed per BCSI sections B3, B7, or B10, as applicable. Apply plates to each face of truss and position as shown above and on the Joint Details, unless noted otherwise. Refer to drawings 160A-Z for standard plate positions. Refer to job's General Notes page for additional information.

Alpine, a division of ITW Building Components Group Inc. shall not be responsible for any deviation from this drawing, any failure to build the truss in conformance with ANSI/TPI 1, or for handling, shipping, installation and bracing of trusses. A seal on this drawing or cover page listing this drawing, indicates acceptance of professional engineering responsibility solely for the design shown. The suitability and use of this drawing for any structure is the responsibility of the Building Designer per ANSI/TPI 1 Sec.2.

For more information see these web sites: Alpine: alpineitw.com; TPI: tpinst.org; SBCA: sbcacomponents.com; ICC: iccsafe.org; AWC: awc.org

ALPINE
AN ITW COMPANY
155 Harlem Ave
North Building, 4th Floor
Glenview, IL 60025

SEQN: 656831 HIP_	Ply: 1	Job Number: 22-7559	Cust: R 215 JRef: 1Xff2150006 T18
FROM: CDM	Qty: 1	Judy Baughn	DrwNo: 131.22.0811.42820
		Truss Label: HJ03	KD / WHK 05/11/2022

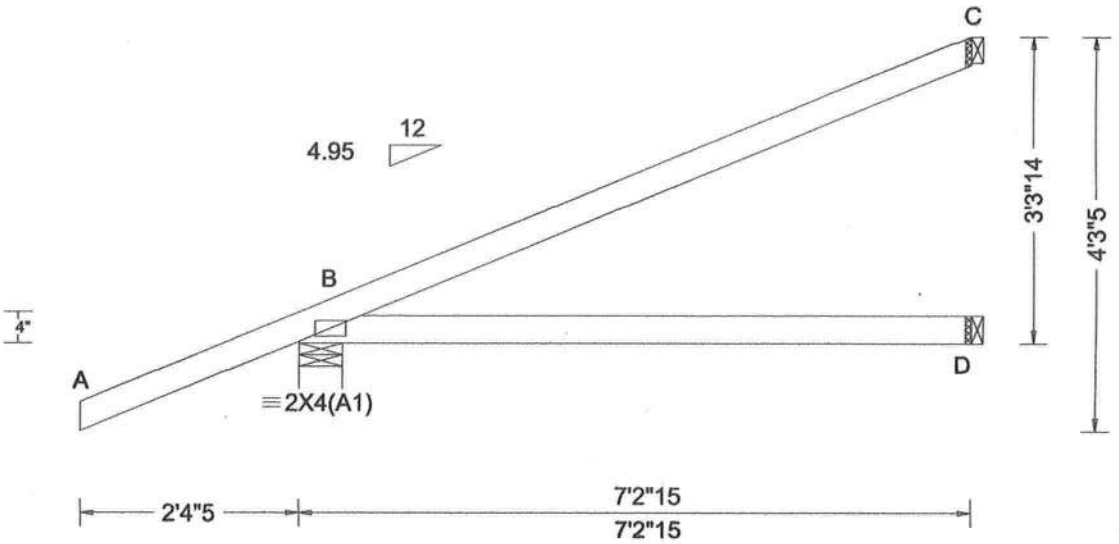

Loading Criteria (psf)	Wind Criteria	Snow Criteria (Pg,Pf in PSF)	Defl/CSI Criteria
TCLL: 20.00	Wind Std: ASCE 7-16	Pg: NA Ct: NA CAT: NA	PP Deflection in loc L/defl L/#
TCDL: 10.00	Speed: 130 mph	Pf: NA Ce: NA	VERT(LL): NA
BCLL: 0.00	Enclosure: Closed	Lu: NA Cs: NA	VERT(CL): NA
BCDL: 10.00	Risk Category: II	Snow Duration: NA	HORZ(LL): -0.015 B - -
Des Ld: 40.00	EXP: C Kzt: NA		HORZ(TL): 0.023 B - -
NCBCLL: 10.00	Mean Height: 15.00 ft	Building Code:	Creep Factor: 2.0
Soffit: 2.00	TCDL: 5.0 psf	FBC 7th Ed. 2020 Res.	Max TC CSI: 0.508
Load Duration: 1.25	BCDL: 5.0 psf	TPI Std: 2014	Max BC CSI: 0.515
Spacing: 24.0 "	MWFRS Parallel Dist: 0 to h/2	Rep Fac: Varies by Ld Case	Max Web CSI: 0.000
	C&C Dist a: 3.00 ft	FT/RT:20(0)/10(0)	
	Loc. from endwall: Any	Plate Type(s):	
	GCpi: 0.18	WAVE	VIEW Ver: 21.02.01.1214.12
	Wind Duration: 1.60		

▲ Maximum Reactions (lbs)

	Gravity			Non-Gravity		
Loc	R+	/ R-	/ Rh	/ Rw	/ U	/ RL
B	301	/-	/-	/-	/200	/-
D	129	/-	/-	/-	/13	/-
C	78	/-	/-	/-	/49	/-

Wind reactions based on MWFRS
B Brg Wid = 5.6 Min Req = 1.5 (Truss)
D Brg Wid = 1.5 Min Req = -
C Brg Wid = 1.5 Min Req = -
Bearing B is a rigid surface.
Members not listed have forces less than 375#

Lumber

Top chord: 2x4 SP #2;
Bot chord: 2x4 SP #2;

Special Loads

------(Lumber Dur.Fac.=1.25 / Plate Dur.Fac.=1.25)

TC: From	-0 plf at	-2.36 to	62 plf at	0.00
TC: From	2 plf at	0.00 to	2 plf at	7.24
BC: From	0 plf at	-2.36 to	4 plf at	0.00
BC: From	2 plf at	0.00 to	2 plf at	7.24

TC: -58 lb Conc. Load at 1.48
TC: 118 lb Conc. Load at 4.31
BC: 4 lb Conc. Load at 1.48
BC: 97 lb Conc. Load at 4.31

Wind

Wind loads and reactions based on MWFRS.

Wind loading based on both gable and hip roof types.

Additional Notes

The overall height of this truss excluding overhang is 3-3-14.

WILLIAM H. KRICK
LICENSE
No. 70861
STATE OF FLORIDA
PROFESSIONAL ENGINEER

COA #0278

05/11/2022

Florida Certificate of Product Approval #FL 1999

****WARNING**** READ AND FOLLOW ALL NOTES ON THIS DRAWING!
****IMPORTANT**** FURNISH THIS DRAWING TO ALL CONTRACTORS INCLUDING THE INSTALLERS

Trusses require extreme care in fabricating, handling, shipping, installing and bracing. Refer to and follow the latest edition of BCSI (Building Component Safety Information, by TPI and SBCA) for safety practices prior to performing these functions. Installers shall provide temporary bracing per BCSI. Unless noted otherwise, top chord shall have properly attached structural sheathing and bottom chord shall have a properly attached rigid ceiling. Locations shown for permanent lateral restraint of webs shall have bracing installed per BCSI sections B3, B7, or B10, as applicable. Apply plates to each face of truss and position as shown above and on the Joint Details, unless noted otherwise. Refer to drawings 160A-Z for standard plate positions. Refer to job's General Notes page for additional information.

Alpine, a division of ITW Building Components Group Inc. shall not be responsible for any deviation from this drawing, any failure to build the truss in conformance with ANSI/TPI 1, or for handling, shipping, installation and bracing of trusses. A seal on this drawing or cover page listing this drawing, indicates acceptance of professional engineering responsibility solely for the design shown. The suitability and use of this drawing for any structure is the responsibility of the Building Designer per ANSI/TPI 1 Sec.2.

For more information see these web sites: Alpine: alpineitw.com; TPI: tpinst.org; SBCA: sbcacomponents.com; ICC: iccsafe.org; AWC: awc.org

ALPINE AN ITW COMPANY
155 Harlem Ave
North Building, 4th Floor
Glenview, IL 60025

SEQN: 656837 HIP_ FROM: CDM	Ply: 1 Qty: 1	**Job Number:** 22-7559 Judy Baughn **Truss Label:** HJ04	Cust: R 215 JRef: 1Xff2150006 T15 DrwNo: 131.22.0811.31850 KD / WHK 05/11/2022	

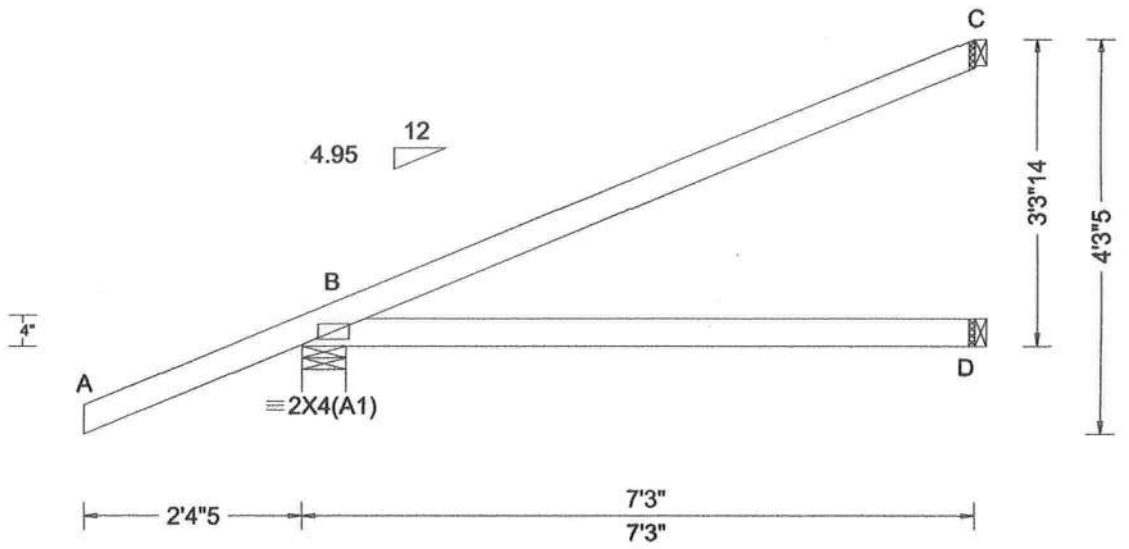

Loading Criteria (psf)	Wind Criteria	Snow Criteria (Pg,Pf in PSF)	Defl/CSI Criteria
TCLL: 20.00 TCDL: 10.00 BCLL: 0.00 BCDL: 10.00 Des Ld: 40.00 NCBCLL: 10.00 Soffit: 2.00 Load Duration: 1.25 Spacing: 24.0 "	Wind Std: ASCE 7-16 Speed: 130 mph Enclosure: Closed Risk Category: II EXP: C Kzt: NA Mean Height: 15.00 ft TCDL: 5.0 psf BCDL: 5.0 psf MWFRS Parallel Dist: 0 to h/2 C&C Dist a: 3.00 ft Loc. from endwall: not in 4.50 ft GCpi: 0.18 Wind Duration: 1.60	Pg: NA Ct: NA CAT: NA Pf: NA Ce: NA Lu: NA Cs: NA Snow Duration: NA Building Code: FBC 7th Ed. 2020 Res. TPI Std: 2014 Rep Fac: Varies by Ld Case FT/RT:20(0)/10(0) Plate Type(s): WAVE	PP Deflection in loc L/defl L/# VERT(LL): NA VERT(CL): NA HORZ(LL): -0.015 B - - HORZ(TL): 0.023 B - - Creep Factor: 2.0 Max TC CSI: 0.509 Max BC CSI: 0.516 Max Web CSI: 0.000 VIEW Ver: 21.02.01.1214.12

▲ Maximum Reactions (lbs)

	Gravity		Non-Gravity			
Loc	R+	/ R-	/ Rh	/ Rw	/ U	/ RL
B	301	/-	/-	/-	/200	/-
D	129	/-	/-	/-	/13	/-
C	78	/-	/-	/-	/49	/-

Wind reactions based on MWFRS
B Brg Wid = 5.7 Min Req = 1.5 (Truss)
D Brg Wid = 1.5 Min Req = -
C Brg Wid = 1.5 Min Req = -
Bearing B is a rigid surface.
Members not listed have forces less than 375#

Lumber

Top chord: 2x4 SP #2;
Bot chord: 2x4 SP #2;

Special Loads

------(Lumber Dur.Fac.=1.25 / Plate Dur.Fac.=1.25)

TC: From	-0 plf at	-2.36 to	62 plf at	0.00
TC: From	2 plf at	0.00 to	2 plf at	7.25
BC: From	0 plf at	-2.36 to	4 plf at	0.00
BC: From	2 plf at	0.00 to	2 plf at	7.25

TC: -58 lb Conc. Load at 1.48
TC: 118 lb Conc. Load at 4.31
BC: 4 lb Conc. Load at 1.48
BC: 97 lb Conc. Load at 4.31

Wind

Wind loads and reactions based on MWFRS.

Wind loading based on both gable and hip roof types.

Additional Notes

The overall height of this truss excluding overhang is 3-3-14.

WILLIAM H. KRICK
LICENSE
No. 70861
STATE OF FLORIDA
PROFESSIONAL ENGINEER

COA #0278

05/11/2022

Florida Certificate of Product Approval #FL 1999

****WARNING**** READ AND FOLLOW ALL NOTES ON THIS DRAWING!
****IMPORTANT**** FURNISH THIS DRAWING TO ALL CONTRACTORS INCLUDING THE INSTALLERS

Trusses require extreme care in fabricating, handling, shipping, installing and bracing. Refer to and follow the latest edition of BCSI (Building Component Safety Information, by TPI and SBCA) for safety practices prior to performing these functions. Installers shall provide temporary bracing per BCSI. Unless noted otherwise, top chord shall have properly attached structural sheathing and bottom chord shall have a properly attached rigid ceiling. Locations shown for permanent lateral restraint of webs shall have bracing installed per BCSI sections B3, B7, or B10, as applicable. Apply plates to each face of truss and position as shown above and on the Joint Details, unless noted otherwise. Refer to drawings 160A-Z for standard plate positions. Refer to job's General Notes page for additional information.

Alpine, a division of ITW Building Components Group Inc. shall not be responsible for any deviation from this drawing, any failure to build the truss in conformance with ANSI/TPI 1, or for handling, shipping, installation and bracing of trusses. A seal on this drawing or cover page listing this drawing, indicates acceptance of professional engineering responsibility solely for the design shown. The suitability and use of this drawing for any structure is the responsibility of the Building Designer per ANSI/TPI 1 Sec.2.

For more information see these web sites: Alpine: alpineitw.com; TPI: tpinst.org; SBCA: sbcacomponents.com; ICC: iccsafe.org; AWC: awc.org

ALPINE
AN ITW COMPANY
155 Harlem Ave
North Building, 4th Floor
Glenview, IL 60025

SEQN: 656833 JACK FROM: CDM	Ply: 1 Qty: 6	**Job Number:** 22-7559 Judy Baughn **Truss Label:** J01	Cust: R 215 JRef: 1Xff2150006 T10 DrwNo: 131.22.0811.24277 KD / WHK 05/11/2022

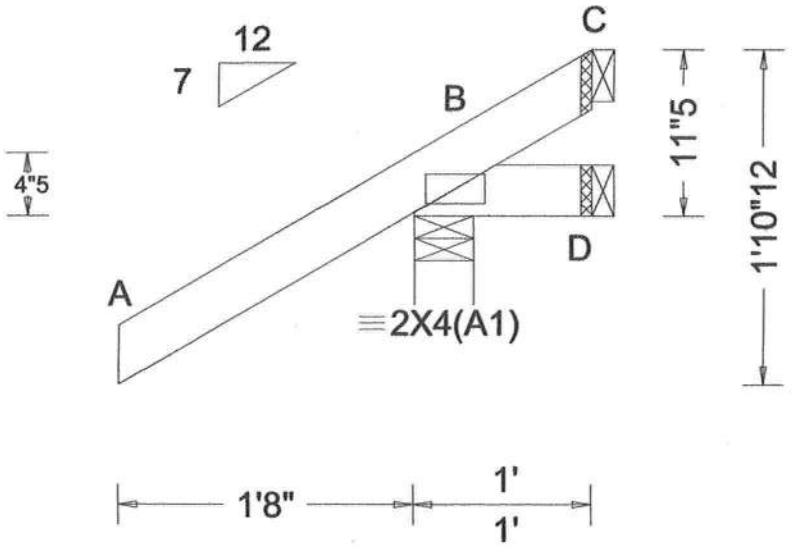

Loading Criteria (psf)	Wind Criteria	Snow Criteria (Pg,Pf in PSF)	Defl/CSI Criteria
TCLL: 20.00 TCDL: 10.00 BCLL: 0.00 BCDL: 10.00 Des Ld: 40.00 NCBCLL: 10.00 Soffit: 2.00 Load Duration: 1.25 Spacing: 24.0 "	Wind Std: ASCE 7-16 Speed: 130 mph Enclosure: Closed Risk Category: II EXP: C Kzt: NA Mean Height: 15.00 ft TCDL: 5.0 psf BCDL: 5.0 psf MWFRS Parallel Dist: 0 to h/2 C&C Dist a: 3.00 ft Loc. from endwall: Any GCpi: 0.18 Wind Duration: 1.60	Pg: NA Ct: NA CAT: NA Pf: NA Ce: NA Lu: NA Cs: NA Snow Duration: NA Building Code: FBC 7th Ed. 2020 Res. TPI Std: 2014 Rep Fac: Yes FT/RT:20(0)/10(0) Plate Type(s): WAVE	PP Deflection in loc L/defl L/# VERT(LL): NA VERT(CL): NA HORZ(LL): -0.000 B - - HORZ(TL): 0.001 B - - Creep Factor: 2.0 Max TC CSI: 0.308 Max BC CSI: 0.048 Max Web CSI: 0.000 VIEW Ver: 21.02.01.1214.12

▲ Maximum Reactions (lbs)

	Gravity			Non-Gravity		
Loc	R+	/ R-	/ Rh	/ Rw	/ U	/ RL
B	291	/-	/-	/238	/75	/47
D	2	/-23	/-	/17	/20	/-
C	-	/-72	/-	/42	/70	/-

Wind reactions based on MWFRS
B Brg Wid = 4.0 Min Req = 1.5 (Truss)
D Brg Wid = 1.5 Min Req = -
C Brg Wid = 1.5 Min Req = -
Bearing B is a rigid surface.
Members not listed have forces less than 375#

Lumber

Top chord: 2x4 SP #2;
Bot chord: 2x4 SP #2;

Wind

Wind loads based on MWFRS with additional C&C member design.

Wind loading based on both gable and hip roof types.

Additional Notes

The overall height of this truss excluding overhang is 0-11-5.

WILLIAM H. KRICK
LICENSE
No. 70861
STATE OF FLORIDA
PROFESSIONAL ENGINEER

COA #0278

06/11/2022

Florida Certificate of Product Approval #FL 1999

****WARNING**** READ AND FOLLOW ALL NOTES ON THIS DRAWING!
****IMPORTANT**** FURNISH THIS DRAWING TO ALL CONTRACTORS INCLUDING THE INSTALLERS

Trusses require extreme care in fabricating, handling, shipping, installing and bracing. Refer to and follow the latest edition of BCSI (Building Component Safety Information, by TPI and SBCA) for safety practices prior to performing these functions. Installers shall provide temporary bracing per BCSI. Unless noted otherwise, top chord shall have properly attached structural sheathing and bottom chord shall have a properly attached rigid ceiling. Locations shown for permanent lateral restraint of webs shall have bracing installed per BCSI sections B3, B7, or B10, as applicable. Apply plates to each face of truss and position as shown above and on the Joint Details, unless noted otherwise. Refer to drawings 160A-Z for standard plate positions. Refer to job's General Notes page for additional information.

Alpine, a division of ITW Building Components Group Inc. shall not be responsible for any deviation from this drawing, any failure to build the truss in conformance with ANSI/TPI 1, or for handling, shipping, installation and bracing of trusses. A seal on this drawing or cover page listing this drawing, indicates acceptance of professional engineering responsibility solely for the design shown. The suitability and use of this drawing for any structure is the responsibility of the Building Designer per ANSI/TPI 1 Sec.2.

For more information see these web sites: Alpine: alpineitw.com; TPI: tpinst.org; SBCA: sbcacomponents.com; ICC: iccsafe.org; AWC: awc.org

ALPINE
AN ITW COMPANY
155 Harlem Ave
North Building, 4th Floor
Glenview, IL 60025

SEQN: 656835 JACK FROM: CDM	Ply: 1 Qty: 5	**Job Number:** 22-7559 Judy Baughn **Truss Label:** J02	Cust: R 215 JRef: 1Xff2150006 T9 DrwNo: 131.22.0811.22030 KD / WHK 05/11/2022

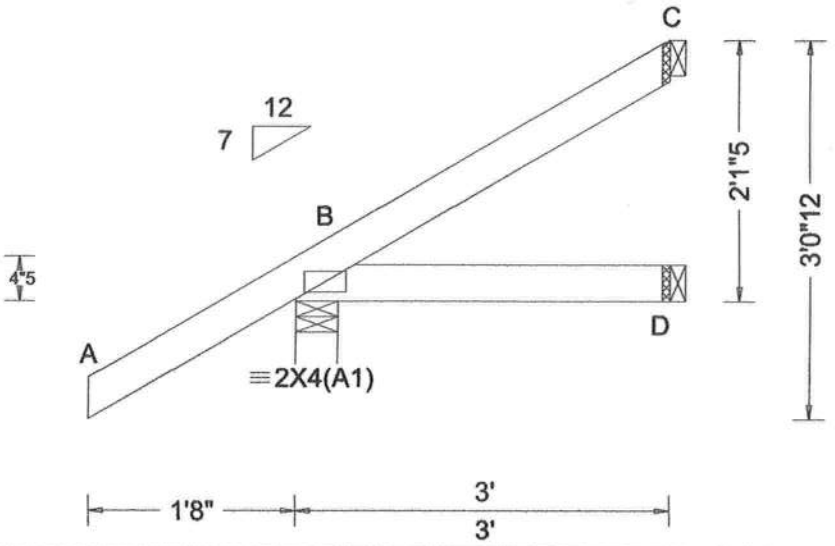

Loading Criteria (psf)	Wind Criteria	Snow Criteria (Pg,Pf in PSF)	Defl/CSI Criteria
TCLL: 20.00 TCDL: 10.00 BCLL: 0.00 BCDL: 10.00 Des Ld: 40.00 NCBCLL: 10.00 Soffit: 2.00 Load Duration: 1.25 Spacing: 24.0 "	Wind Std: ASCE 7-16 Speed: 130 mph Enclosure: Closed Risk Category: II EXP: C Kzt: NA Mean Height: 15.00 ft TCDL: 5.0 psf BCDL: 5.0 psf MWFRS Parallel Dist: 0 to h/2 C&C Dist a: 3.00 ft Loc. from endwall: not in 4.50 ft GCpi: 0.18 Wind Duration: 1.60	Pg: NA Ct: NA CAT: NA Pf: NA Ce: NA Lu: NA Cs: NA Snow Duration: NA Building Code: FBC 7th Ed. 2020 Res. TPI Std: 2014 Rep Fac: Yes FT/RT:20(0)/10(0) Plate Type(s): WAVE	PP Deflection in loc L/defl L/# VERT(LL): NA VERT(CL): NA HORZ(LL): 0.001 B - - HORZ(TL): 0.001 B - - Creep Factor: 2.0 Max TC CSI: 0.238 Max BC CSI: 0.062 Max Web CSI: 0.000 VIEW Ver: 21.02.01.1214.12

▲ Maximum Reactions (lbs)

	Gravity			Non-Gravity		
Loc	R+	/ R-	/ Rh	/ Rw	/ U	/ RL
B	283	/-	/-	/208	/41	/88
D	49	/-	/-	/33	/-	/-
C	59	/-	/-	/37	/37	/-

Wind reactions based on MWFRS
B Brg Wid = 4.0 Min Req = 1.5 (Truss)
D Brg Wid = 1.5 Min Req = -
C Brg Wid = 1.5 Min Req = -
Bearing B is a rigid surface.
Members not listed have forces less than 375#

Lumber

Top chord: 2x4 SP #2;
Bot chord: 2x4 SP #2;

Wind

Wind loads based on MWFRS with additional C&C member design.

Wind loading based on both gable and hip roof types.

Additional Notes

The overall height of this truss excluding overhang is 2-1-5.

WILLIAM H. KRICK
LICENSE
No. 70861
STATE OF FLORIDA
PROFESSIONAL ENGINEER

COA #0278

05/11/2022

Florida Certificate of Product Approval #FL 1999

****WARNING**** READ AND FOLLOW ALL NOTES ON THIS DRAWING!
****IMPORTANT**** FURNISH THIS DRAWING TO ALL CONTRACTORS INCLUDING THE INSTALLERS

Trusses require extreme care in fabricating, handling, shipping, installing and bracing. Refer to and follow the latest edition of BCSI (Building Component Safety Information, by TPI and SBCA) for safety practices prior to performing these functions. Installers shall provide temporary bracing per BCSI. Unless noted otherwise, top chord shall have properly attached structural sheathing and bottom chord shall have a properly attached rigid ceiling. Locations shown for permanent lateral restraint of webs shall have bracing installed per BCSI sections B3, B7, or B10, as applicable. Apply plates to each face of truss and position as shown above and on the Joint Details, unless noted otherwise. Refer to drawings 160A-Z for standard plate positions. Refer to job's General Notes page for additional information.

Alpine, a division of ITW Building Components Group Inc. shall not be responsible for any deviation from this drawing, any failure to build the truss in conformance with ANSI/TPI 1, or for handling, shipping, installation and bracing of trusses. A seal on this drawing or cover page listing this drawing, indicates acceptance of professional engineering responsibility solely for the design shown. The suitability and use of this drawing for any structure is the responsibility of the Building Designer per ANSI/TPI 1 Sec.2.

For more information see these web sites: Alpine: alpineitw.com; TPI: tpinst.org; SBCA: sbcacomponents.com; ICC: iccsafe.org; AWC: awc.org

ALPINE
AN ITW COMPANY
155 Harlem Ave
North Building, 4th Floor
Glenview, IL 60025

SEQN: 656872 JACK FROM: CDM	Ply: 1 Qty: 3	**Job Number:** 22-7559 Judy Baughn **Truss Label:** J03	Cust: R 215 JRef: 1Xff2150006 T11 DrwNo: 131.22.0811.19360 KD / WHK 05/11/2022

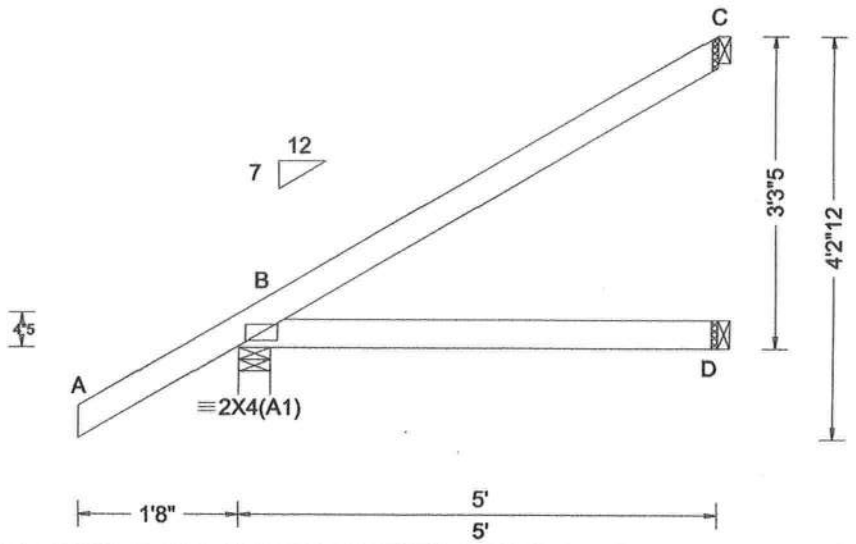

Loading Criteria (psf)	**Wind Criteria**	**Snow Criteria** (Pg,Pf in PSF)	**Defl/CSI Criteria**
TCLL: 20.00 TCDL: 10.00 BCLL: 0.00 BCDL: 10.00 Des Ld: 40.00 NCBCLL: 10.00 Soffit: 2.00 Load Duration: 1.25 Spacing: 24.0 "	Wind Std: ASCE 7-16 Speed: 130 mph Enclosure: Closed Risk Category: II EXP: C Kzt: NA Mean Height: 15.00 ft TCDL: 5.0 psf BCDL: 5.0 psf MWFRS Parallel Dist: 0 to h/2 C&C Dist a: 3.00 ft Loc. from endwall: not in 4.50 ft GCpi: 0.18 Wind Duration: 1.60	Pg: NA Ct: NA CAT: NA Pf: NA Ce: NA Lu: NA Cs: NA Snow Duration: NA Building Code: FBC 7th Ed. 2020 Res. TPI Std: 2014 Rep Fac: Yes FT/RT:20(0)/10(0) Plate Type(s): WAVE	PP Deflection in loc L/defl L/# VERT(LL): NA VERT(CL): NA HORZ(LL): 0.003 B - - HORZ(TL): 0.007 B - - Creep Factor: 2.0 Max TC CSI: 0.318 Max BC CSI: 0.234 Max Web CSI: 0.000 VIEW Ver: 21.02.01.1214.12

▲ Maximum Reactions (lbs)

	Gravity			Non-Gravity		
Loc	R+	/ R-	/ Rh	/ Rw	/ U	/ RL
B	350	/-	/-	/245	/38	/130
D	89	/-	/-	/52	/-	/-
C	127	/-	/-	/81	/71	/-

Wind reactions based on MWFRS
B Brg Wid = 4.0 Min Req = 1.5 (Truss)
D Brg Wid = 1.5 Min Req = -
C Brg Wid = 1.5 Min Req = -
Bearing B is a rigid surface.
Members not listed have forces less than 375#

Lumber

Top chord: 2x4 SP #2;
Bot chord: 2x4 SP #2;

Wind

Wind loads based on MWFRS with additional C&C member design.

Wind loading based on both gable and hip roof types.

Additional Notes

The overall height of this truss excluding overhang is 3-3-5.

COA #0278

05/11/2022

Florida Certificate of Product Approval #FL 1999

****WARNING**** READ AND FOLLOW ALL NOTES ON THIS DRAWING!
****IMPORTANT**** FURNISH THIS DRAWING TO ALL CONTRACTORS INCLUDING THE INSTALLERS

Trusses require extreme care in fabricating, handling, shipping, installing and bracing. Refer to and follow the latest edition of BCSI (Building Component Safety Information, by TPI and SBCA) for safety practices prior to performing these functions. Installers shall provide temporary bracing per BCSI. Unless noted otherwise, top chord shall have properly attached structural sheathing and bottom chord shall have a properly attached rigid ceiling. Locations shown for permanent lateral restraint of webs shall have bracing installed per BCSI sections B3, B7, or B10, as applicable. Apply plates to each face of truss and position as shown above and on the Joint Details, unless noted otherwise. Refer to drawings 160A-Z for standard plate positions. Refer to job's General Notes page for additional information.

Alpine, a division of ITW Building Components Group Inc. shall not be responsible for any deviation from this drawing, any failure to build the truss in conformance with ANSI/TPI 1, or for handling, shipping, installation and bracing of trusses. A seal on this drawing or cover page listing this drawing, indicates acceptance of professional engineering responsibility solely for the design shown. The suitability and use of this drawing for any structure is the responsibility of the Building Designer per ANSI/TPI 1 Sec.2.

For more information see these web sites: Alpine: alpineitw.com; TPI: tpinst.org; SBCA: sbcacomponents.com; ICC: iccsafe.org; AWC: awc.org

ALPINE
AN ITW COMPANY
155 Harlem Ave
North Building, 4th Floor
Glenview, IL 60025

SEQN: 656817 EJAC FROM: CDM	Ply: 1 Qty: 11	**Job Number:** 22-7559 Judy Baughn **Truss Label:** J04	Cust: R 215 JRef: 1Xff2150006 T32 DrwNo: 131.22.0811.16060 KD / WHK 05/11/2022

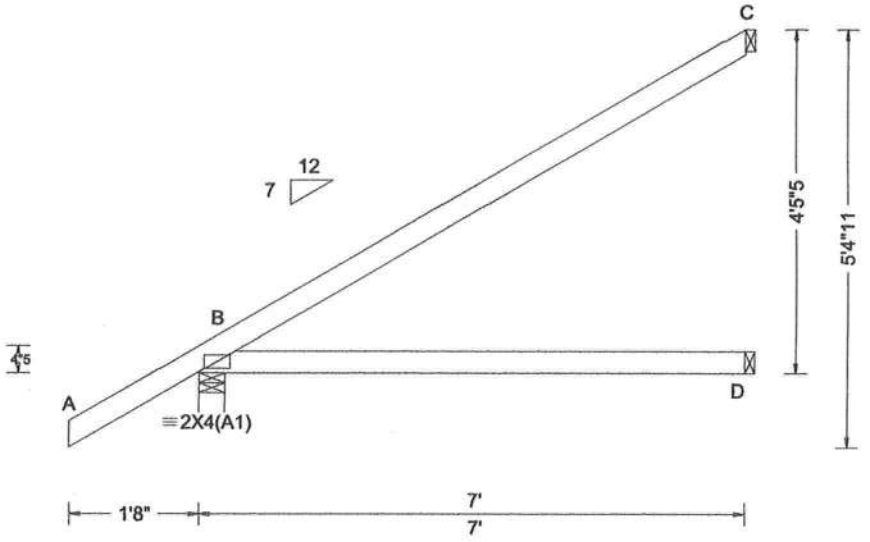

Loading Criteria (psf)	**Wind Criteria**	**Snow Criteria** (Pg,Pf in PSF)	**Defl/CSI Criteria**
TCLL: 20.00 TCDL: 10.00 BCLL: 0.00 BCDL: 10.00 Des Ld: 40.00 NCBCLL: 10.00 Soffit: 2.00 Load Duration: 1.25 Spacing: 24.0 "	Wind Std: ASCE 7-16 Speed: 130 mph Enclosure: Closed Risk Category: II EXP: C Kzt: NA Mean Height: 15.00 ft TCDL: 5.0 psf BCDL: 5.0 psf MWFRS Parallel Dist: h/2 to h C&C Dist a: 3.00 ft Loc. from endwall: not in 4.50 ft GCpi: 0.18 Wind Duration: 1.60	Pg: NA Ct: NA CAT: NA Pf: NA Ce: NA Lu: NA Cs: NA Snow Duration: NA Building Code: FBC 7th Ed. 2020 Res. TPI Std: 2014 Rep Fac: Yes FT/RT:20(0)/10(0) Plate Type(s): WAVE	PP Deflection in loc L/defl L/# VERT(LL): NA VERT(CL): NA HORZ(LL): 0.013 B - - HORZ(TL): 0.026 B - - Creep Factor: 2.0 Max TC CSI: 0.718 Max BC CSI: 0.515 Max Web CSI: 0.000 VIEW Ver: 21.02.01.1214.12

▲ Maximum Reactions (lbs)

Loc	Gravity R+	Gravity / R-	Gravity / Rh	Non-Gravity / Rw	Non-Gravity / U	Non-Gravity / RL
B	426	/-	/-	/291	/37	/171
D	129	/-	/-	/73	/-	/-
C	188	/-	/-	/123	/102	/-

Wind reactions based on MWFRS
B Brg Wid = 4.0 Min Req = 1.5 (Truss)
D Brg Wid = 1.5 Min Req = -
C Brg Wid = 1.5 Min Req = -
Bearing B is a rigid surface.
Members not listed have forces less than 375#

Lumber

Top chord: 2x4 SP #2;
Bot chord: 2x4 SP #2;

Wind

Wind loads based on MWFRS with additional C&C member design.

Wind loading based on both gable and hip roof types.

Additional Notes

The overall height of this truss excluding overhang is 4-5-5.

WILLIAM H. KRICK
LICENSE
No. 70861
STATE OF FLORIDA
PROFESSIONAL ENGINEER

COA #0278

05/11/2022

Florida Certificate of Product Approval #FL 1999

****WARNING**** READ AND FOLLOW ALL NOTES ON THIS DRAWING!
****IMPORTANT**** FURNISH THIS DRAWING TO ALL CONTRACTORS INCLUDING THE INSTALLERS

Trusses require extreme care in fabricating, handling, shipping, installing and bracing. Refer to and follow the latest edition of BCSI (Building Component Safety Information, by TPI and SBCA) for safety practices prior to performing these functions. Installers shall provide temporary bracing per BCSI. Unless noted otherwise, top chord shall have properly attached structural sheathing and bottom chord shall have a properly attached rigid ceiling. Locations shown for permanent lateral restraint of webs shall have bracing installed per BCSI sections B3, B7, or B10, as applicable. Apply plates to each face of truss and position as shown above and on the Joint Details, unless noted otherwise. Refer to drawings 160A-Z for standard plate positions. Refer to job's General Notes page for additional information.

Alpine, a division of ITW Building Components Group Inc. shall not be responsible for any deviation from this drawing, any failure to build the truss in conformance with ANSI/TPI 1, or for handling, shipping, installation and bracing of trusses. A seal on this drawing or cover page listing this drawing, indicates acceptance of professional engineering responsibility solely for the design shown. The suitability and use of this drawing for any structure is the responsibility of the Building Designer per ANSI/TPI 1 Sec.2.

For more information see these web sites: Alpine: alpineitw.com; TPI: tpinst.org; SBCA: sbcacomponents.com; ICC: iccsafe.org; AWC: awc.org

ALPINE AN ITW COMPANY
155 Harlem Ave
North Building, 4th Floor
Glenview, IL 60025

SEQN: 656875 EJAC FROM: CDM	Ply: 1 Qty: 2	**Job Number:** 22-7559 Judy Baughn **Truss Label:** J05	Cust: R 215 JRef: 1Xff2150006 T33 DrwNo: 131.22.0811.13483 KD / WHK 05/11/2022

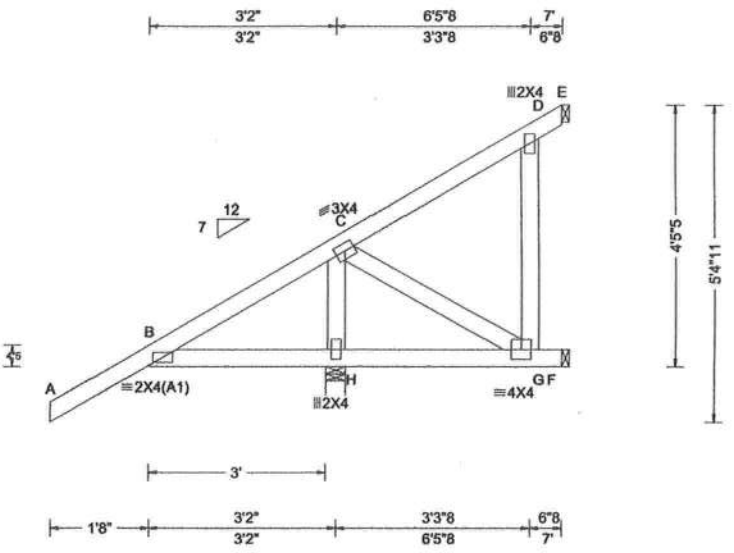

Loading Criteria (psf)	Wind Criteria	Snow Criteria (Pg,Pf in PSF)	Defl/CSI Criteria
TCLL: 20.00 TCDL: 10.00 BCLL: 0.00 BCDL: 10.00 Des Ld: 40.00 NCBCLL: 10.00 Soffit: 2.00 Load Duration: 1.25 Spacing: 24.0 "	Wind Std: ASCE 7-16 Speed: 130 mph Enclosure: Closed Risk Category: II EXP: C Kzt: NA Mean Height: 15.00 ft TCDL: 5.0 psf BCDL: 5.0 psf MWFRS Parallel Dist: h to 2h C&C Dist a: 3.00 ft Loc. from endwall: not in 9.00 ft GCpi: 0.18 Wind Duration: 1.60	Pg: NA Ct: NA CAT: NA Pf: NA Ce: NA Lu: NA Cs: NA Snow Duration: NA Building Code: FBC 7th Ed. 2020 Res. TPI Std: 2014 Rep Fac: Yes FT/RT:20(0)/10(0) Plate Type(s): WAVE	PP Deflection in loc L/defl L/# VERT(LL): 0.011 B 999 240 VERT(CL): 0.025 B 999 180 HORZ(LL): -0.004 E - - HORZ(TL): 0.011 D - - Creep Factor: 2.0 Max TC CSI: 0.238 Max BC CSI: 0.108 Max Web CSI: 0.175 VIEW Ver: 21.02.01.1214.12

▲ Maximum Reactions (lbs)

Loc	Gravity R+	Gravity / R-	Gravity / Rh	Non-Gravity / Rw	Non-Gravity / U	Non-Gravity / RL
H	762	/-	/-	/603	/70	/123
F	64	/-80	/-	/42	/52	/-
E	5	/-64	/-	/49	/63	/-

Wind reactions based on MWFRS
H Brg Wid = 4.0 Min Req = 1.5 (Truss)
F Brg Wid = 1.5 Min Req = -
E Brg Wid = 1.5 Min Req = -
Bearing H is a rigid surface.
Members not listed have forces less than 375#

Maximum Top Chord Forces Per Ply (lbs)

Chords	Tens.	Comp.
B - C	533	-487

Maximum Bot Chord Forces Per Ply (lbs)

Chords	Tens.	Comp.	Chords	Tens.	Comp.
B - H	557	-423	H - G	237	-400

Maximum Web Forces Per Ply (lbs)

Webs	Tens.	Comp.	Webs	Tens.	Comp.
H - C	482	-673	C - G	460	-273

Lumber

Top chord: 2x4 SP #2;
Bot chord: 2x4 SP #2;
Webs: 2x4 SP #3;

Wind

Wind loads based on MWFRS with additional C&C member design.

Left cantilever is exposed to wind

Wind loading based on both gable and hip roof types.

Additional Notes

The overall height of this truss excluding overhang is 4-5-5.

WILLIAM H. KRICK
LICENSE
No. 70861
STATE OF FLORIDA
PROFESSIONAL ENGINEER

COA #0278

05/11/2022

Florida Certificate of Product Approval #FL 1999

****WARNING**** READ AND FOLLOW ALL NOTES ON THIS DRAWING!
****IMPORTANT**** FURNISH THIS DRAWING TO ALL CONTRACTORS INCLUDING THE INSTALLERS

Trusses require extreme care in fabricating, handling, shipping, installing and bracing. Refer to and follow the latest edition of BCSI (Building Component Safety Information, by TPI and SBCA) for safety practices prior to performing these functions. Installers shall provide temporary bracing per BCSI. Unless noted otherwise, top chord shall have properly attached structural sheathing and bottom chord shall have a properly attached rigid ceiling. Locations shown for permanent lateral restraint of webs shall have bracing installed per BCSI sections B3, B7, or B10, as applicable. Apply plates to each face of truss and position as shown above and on the Joint Details, unless noted otherwise. Refer to drawings 160A-Z for standard plate positions. Refer to job's General Notes page for additional information.

Alpine, a division of ITW Building Components Group Inc. shall not be responsible for any deviation from this drawing, any failure to build the truss in conformance with ANSI/TPI 1, or for handling, shipping, installation and bracing of trusses. A seal on this drawing or cover page listing this drawing, indicates acceptance of professional engineering responsibility solely for the design shown. The suitability and use of this drawing for any structure is the responsibility of the Building Designer per ANSI/TPI 1 Sec.2.

For more information see these web sites: Alpine: alpineitw.com; TPI: tpinst.org; SBCA: sbcacomponents.com; ICC: iccsafe.org; AWC: awc.org

ALPINE
AN ITW COMPANY
155 Harlem Ave
North Building, 4th Floor
Glenview, IL 60025

SEQN: 656879 JACK FROM: CDM	Ply: 1 Qty: 1	**Job Number:** 22-7559 Judy Baughn **Truss Label:** J06	Cust: R 215 JRef: 1Xff2150006 T31 DrwNo: 131.22.0811.10740 KD / WHK 05/11/2022

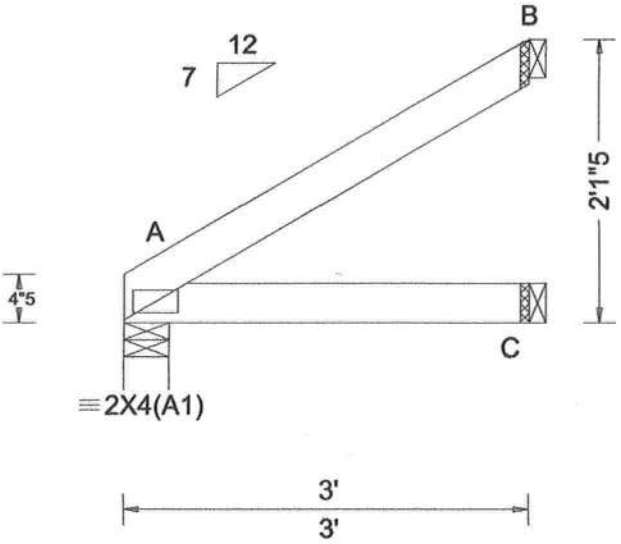

Loading Criteria (psf)	Wind Criteria	Snow Criteria (Pg,Pf in PSF)	Defl/CSI Criteria
TCLL: 20.00 TCDL: 10.00 BCLL: 0.00 BCDL: 10.00 Des Ld: 40.00 NCBCLL: 10.00 Soffit: 2.00 Load Duration: 1.25 Spacing: 24.0 "	Wind Std: ASCE 7-16 Speed: 130 mph Enclosure: Closed Risk Category: II EXP: C Kzt: NA Mean Height: 15.00 ft TCDL: 5.0 psf BCDL: 5.0 psf MWFRS Parallel Dist: 0 to h/2 C&C Dist a: 3.00 ft Loc. from endwall: not in 4.50 ft GCpi: 0.18 Wind Duration: 1.60	Pg: NA Ct: NA CAT: NA Pf: NA Ce: NA Lu: NA Cs: NA Snow Duration: NA Building Code: FBC 7th Ed. 2020 Res. TPI Std: 2014 Rep Fac: Yes FT/RT:20(0)/10(0) Plate Type(s): WAVE	PP Deflection in loc L/defl L/# VERT(LL): NA VERT(CL): NA HORZ(LL): 0.001 A - - HORZ(TL): 0.003 A - - Creep Factor: 2.0 Max TC CSI: 0.120 Max BC CSI: 0.080 Max Web CSI: 0.000 VIEW Ver: 21.02.01.1214.12

▲Maximum Reactions (lbs)

	Gravity			Non-Gravity		
Loc	R+	/ R-	/ Rh	/ Rw	/ U	/ RL
A	131	/-	/-	/81	/-	/60
C	55	/-	/-	/33	/-	/-
B	82	/-	/-	/55	/45	/-

Wind reactions based on MWFRS
A Brg Wid = 4.0 Min Req = 1.5 (Truss)
C Brg Wid = 1.5 Min Req = -
B Brg Wid = 1.5 Min Req = -
Bearing A is a rigid surface.
Members not listed have forces less than 375#

Lumber

Top chord: 2x4 SP #2;
Bot chord: 2x4 SP #2;

Wind

Wind loads based on MWFRS with additional C&C member design.

Wind loading based on both gable and hip roof types.

Additional Notes

The overall height of this truss excluding overhang is 2-1-5.

WILLIAM H. KRICK
LICENSE
No. 70861
STATE OF FLORIDA
PROFESSIONAL ENGINEER

COA #0278

05/11/2022

Florida Certificate of Product Approval #FL 1999

****WARNING**** READ AND FOLLOW ALL NOTES ON THIS DRAWING!
****IMPORTANT**** FURNISH THIS DRAWING TO ALL CONTRACTORS INCLUDING THE INSTALLERS

Trusses require extreme care in fabricating, handling, shipping, installing and bracing. Refer to and follow the latest edition of BCSI (Building Component Safety Information, by TPI and SBCA) for safety practices prior to performing these functions. Installers shall provide temporary bracing per BCSI. Unless noted otherwise, top chord shall have properly attached structural sheathing and bottom chord shall have a properly attached rigid ceiling. Locations shown for permanent lateral restraint of webs shall have bracing installed per BCSI sections B3, B7, or B10, as applicable. Apply plates to each face of truss and position as shown above and on the Joint Details, unless noted otherwise. Refer to drawings 160A-Z for standard plate positions. Refer to job's General Notes page for additional information.

Alpine, a division of ITW Building Components Group Inc. shall not be responsible for any deviation from this drawing, any failure to build the truss in conformance with ANSI/TPI 1, or for handling, shipping, installation and bracing of trusses. A seal on this drawing or cover page listing this drawing, indicates acceptance of professional engineering responsibility solely for the design shown. The suitability and use of this drawing for any structure is the responsibility of the Building Designer per ANSI/TPI 1 Sec.2.

For more information see these web sites: Alpine: alpineitw.com; TPI: tpinst.org; SBCA: sbcacomponents.com; ICC: iccsafe.org; AWC: awc.org

ALPINE
AN ITW COMPANY
155 Harlem Ave
North Building, 4th Floor
Glenview, IL 60025

SEQN: 656877 JACK FROM: CDM	Ply: 1 Qty: 1	**Job Number:** 22-7559 Judy Baughn **Truss Label:** J07	Cust: R 215 JRef: 1Xff2150006 T30 DrwNo: 131.22.0811.08660 KD / WHK 05/11/2022

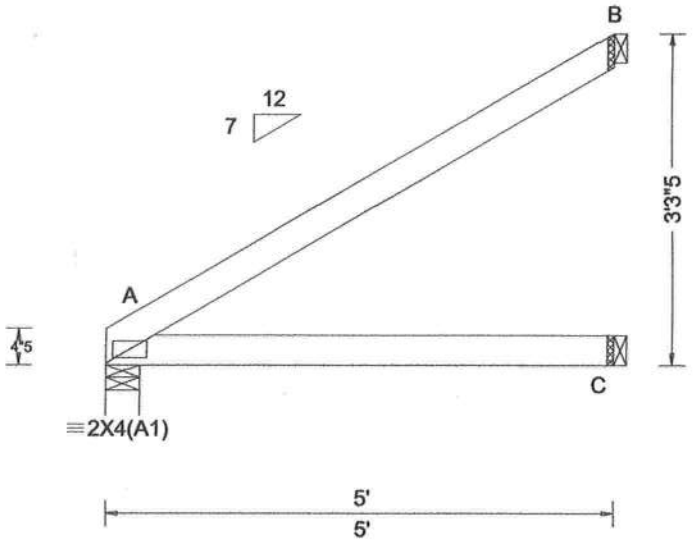

Loading Criteria (psf)	Wind Criteria	Snow Criteria (Pg,Pf in PSF)	Defl/CSI Criteria
TCLL: 20.00 TCDL: 10.00 BCLL: 0.00 BCDL: 10.00 Des Ld: 40.00 NCBCLL: 10.00 Soffit: 2.00 Load Duration: 1.25 Spacing: 24.0 "	Wind Std: ASCE 7-16 Speed: 130 mph Enclosure: Closed Risk Category: II EXP: C Kzt: NA Mean Height: 15.00 ft TCDL: 5.0 psf BCDL: 5.0 psf MWFRS Parallel Dist: 0 to h/2 C&C Dist a: 3.00 ft Loc. from endwall: not in 4.50 ft GCpi: 0.18 Wind Duration: 1.60	Pg: NA Ct: NA CAT: NA Pf: NA Ce: NA Lu: NA Cs: NA Snow Duration: NA Building Code: FBC 7th Ed. 2020 Res. TPI Std: 2014 Rep Fac: Yes FT/RT:20(0)/10(0) Plate Type(s): WAVE	PP Deflection in loc L/defl L/# VERT(LL): NA VERT(CL): NA HORZ(LL): 0.006 A - - HORZ(TL): 0.012 A - - Creep Factor: 2.0 Max TC CSI: 0.373 Max BC CSI: 0.256 Max Web CSI: 0.000 VIEW Ver: 21.02.01.1214.12

▲ Maximum Reactions (lbs)

	Gravity			Non-Gravity		
Loc	R+	/ R-	/ Rh	/ Rw	/ U	/ RL
A	214	/-	/-	/133	/2	/102
C	94	/-	/-	/56	/-	/-
B	140	/-	/-	/93	/75	/-

Wind reactions based on MWFRS
A Brg Wid = 4.0 Min Req = 1.5 (Truss)
C Brg Wid = 1.5 Min Req = -
B Brg Wid = 1.5 Min Req = -
Bearing A is a rigid surface.
Members not listed have forces less than 375#

Lumber

Top chord: 2x4 SP #2;
Bot chord: 2x4 SP #2;

Wind

Wind loads based on MWFRS with additional C&C member design.

Wind loading based on both gable and hip roof types.

Additional Notes

The overall height of this truss excluding overhang is 3-3-5.

WILLIAM H. KRICK
LICENSE
No. 70861
STATE OF FLORIDA
PROFESSIONAL ENGINEER

COA #0278

05/11/2022

Florida Certificate of Product Approval #FL 1999

****WARNING**** READ AND FOLLOW ALL NOTES ON THIS DRAWING!
****IMPORTANT**** FURNISH THIS DRAWING TO ALL CONTRACTORS INCLUDING THE INSTALLERS

Trusses require extreme care in fabricating, handling, shipping, installing and bracing. Refer to and follow the latest edition of BCSI (Building Component Safety Information, by TPI and SBCA) for safety practices prior to performing these functions. Installers shall provide temporary bracing per BCSI. Unless noted otherwise, top chord shall have properly attached structural sheathing and bottom chord shall have a properly attached rigid ceiling. Locations shown for permanent lateral restraint of webs shall have bracing installed per BCSI sections B3, B7, or B10, as applicable. Apply plates to each face of truss and position as shown above and on the Joint Details, unless noted otherwise. Refer to drawings 160A-Z for standard plate positions. Refer to job's General Notes page for additional information.

Alpine, a division of ITW Building Components Group Inc. shall not be responsible for any deviation from this drawing, any failure to build the truss in conformance with ANSI/TPI 1, or for handling, shipping, installation and bracing of trusses. A seal on this drawing or cover page listing this drawing, indicates acceptance of professional engineering responsibility solely for the design shown. The suitability and use of this drawing for any structure is the responsibility of the Building Designer per ANSI/TPI 1 Sec.2.

For more information see these web sites: Alpine: alpineitw.com; TPI: tpinst.org; SBCA: sbcacomponents.com; ICC: iccsafe.org; AWC: awc.org

ALPINE
AN ITW COMPANY
155 Harlem Ave
North Building, 4th Floor
Glenview, IL 60025

SEQN: 656825 JACK FROM: CDM	Ply: 1 Qty: 1	**Job Number:** 22-7559 Judy Baughn **Truss Label:** J08	Cust: R 215 JRef: 1Xff2150006 T7 DrwNo: 131.22.0811.06047 KD / WHK 05/11/2022

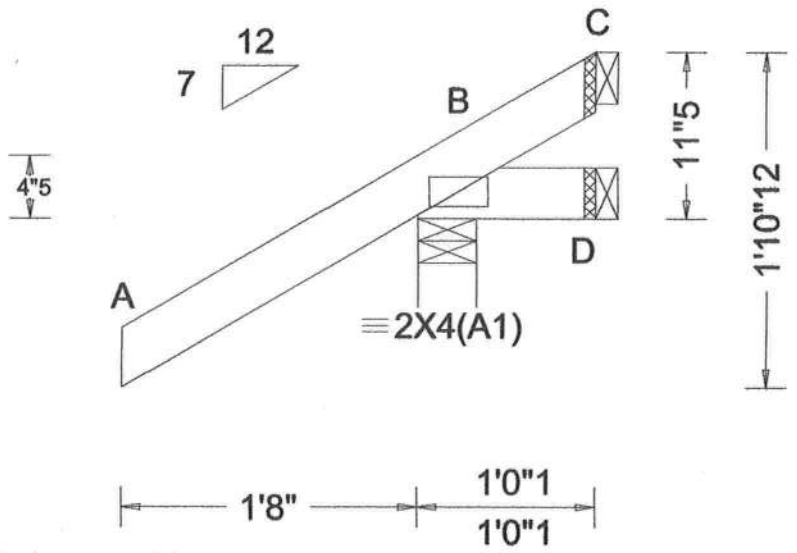

Loading Criteria (psf)	Wind Criteria	Snow Criteria (Pg,Pf in PSF)	Defl/CSI Criteria
TCLL: 20.00 TCDL: 10.00 BCLL: 0.00 BCDL: 10.00 Des Ld: 40.00 NCBCLL: 10.00 Soffit: 2.00 Load Duration: 1.25 Spacing: 24.0 "	Wind Std: ASCE 7-16 Speed: 130 mph Enclosure: Closed Risk Category: II EXP: C Kzt: NA Mean Height: 15.00 ft TCDL: 5.0 psf BCDL: 5.0 psf MWFRS Parallel Dist: 0 to h/2 C&C Dist a: 3.00 ft Loc. from endwall: Any GCpi: 0.18 Wind Duration: 1.60	Pg: NA Ct: NA CAT: NA Pf: NA Ce: NA Lu: NA Cs: NA Snow Duration: NA Building Code: FBC 7th Ed. 2020 Res. TPI Std: 2014 Rep Fac: Yes FT/RT:20(0)/10(0) Plate Type(s): WAVE	PP Deflection in loc L/defl L/# VERT(LL): NA VERT(CL): NA HORZ(LL): -0.000 B - - HORZ(TL): 0.001 B - - Creep Factor: 2.0 Max TC CSI: 0.308 Max BC CSI: 0.049 Max Web CSI: 0.000 VIEW Ver: 21.02.01.1214.12

▲ Maximum Reactions (lbs)

	Gravity			Non-Gravity		
Loc	R+	/ R-	/ Rh	/ Rw	/ U	/ RL
B	291	/-	/-	/238	/75	/47
D	2	/-23	/-	/17	/20	/-
C	-	/-72	/-	/42	/70	/-

Wind reactions based on MWFRS
B Brg Wid = 4.0 Min Req = 1.5 (Truss)
D Brg Wid = 1.5 Min Req = -
C Brg Wid = 1.5 Min Req = -
Bearing B is a rigid surface.
Members not listed have forces less than 375#

Lumber

Top chord: 2x4 SP #2;
Bot chord: 2x4 SP #2;

Wind

Wind loads based on MWFRS with additional C&C member design.

Wind loading based on both gable and hip roof types.

Additional Notes

The overall height of this truss excluding overhang is 0-11-5.

COA #0278

05/11/2022

Florida Certificate of Product Approval #FL 1999

****WARNING**** READ AND FOLLOW ALL NOTES ON THIS DRAWING!
****IMPORTANT**** FURNISH THIS DRAWING TO ALL CONTRACTORS INCLUDING THE INSTALLERS

Trusses require extreme care in fabricating, handling, shipping, installing and bracing. Refer to and follow the latest edition of BCSI (Building Component Safety Information, by TPI and SBCA) for safety practices prior to performing these functions. Installers shall provide temporary bracing per BCSI. Unless noted otherwise, top chord shall have properly attached structural sheathing and bottom chord shall have a properly attached rigid ceiling. Locations shown for permanent lateral restraint of webs shall have bracing installed per BCSI sections B3, B7, or B10, as applicable. Apply plates to each face of truss and position as shown above and on the Joint Details, unless noted otherwise. Refer to drawings 160A-Z for standard plate positions. Refer to job's General Notes page for additional information.

Alpine, a division of ITW Building Components Group Inc. shall not be responsible for any deviation from this drawing, any failure to build the truss in conformance with ANSI/TPI 1, or for handling, shipping, installation and bracing of trusses. A seal on this drawing or cover page listing this drawing, indicates acceptance of professional engineering responsibility solely for the design shown. The suitability and use of this drawing for any structure is the responsibility of the Building Designer per ANSI/TPI 1 Sec.2.

For more information see these web sites: Alpine: alpineitw.com; TPI: tpinst.org; SBCA: sbcacomponents.com; ICC: iccsafe.org; AWC: awc.org

ALPINE
AN ITW COMPANY
155 Harlem Ave
North Building, 4th Floor
Glenview, IL 60025

SEQN: 656829 JACK FROM: CDM	Ply: 1 Qty: 1	**Job Number:** 22-7559 Judy Baughn **Truss Label:** J11	Cust: R 215 JRef: 1Xff2150006 T3 DrwNo: 131.22.0810.59670 KD / WHK 05/11/2022

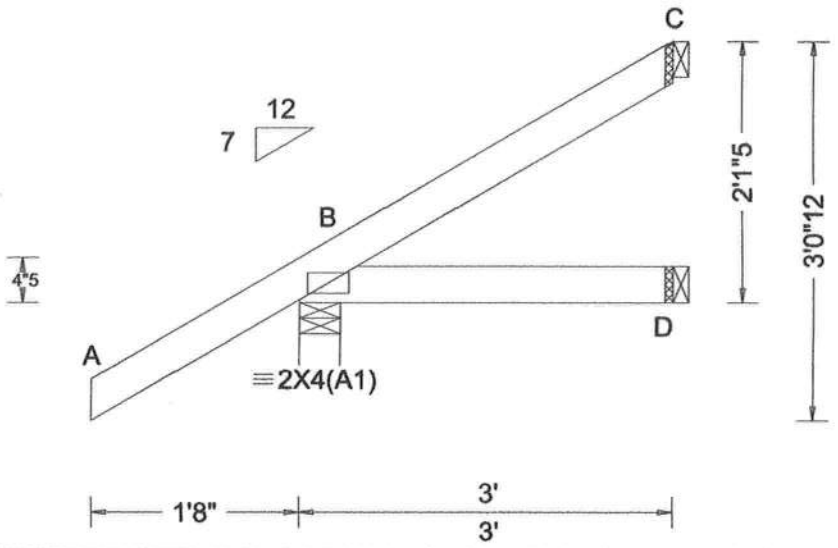

Loading Criteria (psf)	Wind Criteria	Snow Criteria (Pg,Pf in PSF)	Defl/CSI Criteria
TCLL: 20.00 TCDL: 10.00 BCLL: 0.00 BCDL: 10.00 Des Ld: 40.00 NCBCLL: 10.00 Soffit: 2.00 Load Duration: 1.25 Spacing: 24.0 "	Wind Std: ASCE 7-16 Speed: 130 mph Enclosure: Closed Risk Category: II EXP: C Kzt: NA Mean Height: 15.00 ft TCDL: 5.0 psf BCDL: 5.0 psf MWFRS Parallel Dist: 0 to h/2 C&C Dist a: 3.00 ft Loc. from endwall: not in 4.50 ft GCpi: 0.18 Wind Duration: 1.60	Pg: NA Ct: NA CAT: NA Pf: NA Ce: NA Lu: NA Cs: NA Snow Duration: NA Building Code: FBC 7th Ed. 2020 Res. TPI Std: 2014 Rep Fac: Yes FT/RT:20(0)/10(0) Plate Type(s): WAVE	PP Deflection in loc L/defl L/# VERT(LL): NA VERT(CL): NA HORZ(LL): 0.001 B - - HORZ(TL): 0.001 B - - Creep Factor: 2.0 Max TC CSI: 0.238 Max BC CSI: 0.063 Max Web CSI: 0.000 VIEW Ver: 21.02.01.1214.12

▲ Maximum Reactions (lbs)

	Gravity			Non-Gravity		
Loc	R+	/ R-	/ Rh	/ Rw	/ U	/ RL
B	283	/-	/-	/208	/41	/88
D	49	/-	/-	/33	/-	/-
C	59	/-	/-	/37	/37	/-

Wind reactions based on MWFRS
B Brg Wid = 4.0 Min Req = 1.5 (Truss)
D Brg Wid = 1.5 Min Req = -
C Brg Wid = 1.5 Min Req = -
Bearing B is a rigid surface.
Members not listed have forces less than 375#

Lumber

Top chord: 2x4 SP #2;
Bot chord: 2x4 SP #2;

Wind

Wind loads based on MWFRS with additional C&C member design.

Wind loading based on both gable and hip roof types.

Additional Notes

The overall height of this truss excluding overhang is 2-1-5.

WILLIAM H. KRICK
LICENSE
No. 70861
STATE OF FLORIDA
PROFESSIONAL ENGINEER

COA #0278

05/11/2022

Florida Certificate of Product Approval #FL 1999

****WARNING**** READ AND FOLLOW ALL NOTES ON THIS DRAWING!
****IMPORTANT**** FURNISH THIS DRAWING TO ALL CONTRACTORS INCLUDING THE INSTALLERS

Trusses require extreme care in fabricating, handling, shipping, installing and bracing. Refer to and follow the latest edition of BCSI (Building Component Safety Information, by TPI and SBCA) for safety practices prior to performing these functions. Installers shall provide temporary bracing per BCSI. Unless noted otherwise, top chord shall have properly attached structural sheathing and bottom chord shall have a properly attached rigid ceiling. Locations shown for permanent lateral restraint of webs shall have bracing installed per BCSI sections B3, B7, or B10, as applicable. Apply plates to each face of truss and position as shown above and on the Joint Details, unless noted otherwise. Refer to drawings 160A-Z for standard plate positions. Refer to job's General Notes page for additional information.

Alpine, a division of ITW Building Components Group Inc. shall not be responsible for any deviation from this drawing, any failure to build the truss in conformance with ANSI/TPI 1, or for handling, shipping, installation and bracing of trusses. A seal on this drawing or cover page listing this drawing, indicates acceptance of professional engineering responsibility solely for the design shown. The suitability and use of this drawing for any structure is the responsibility of the Building Designer per ANSI/TPI 1 Sec.2.

For more information see these web sites: Alpine: alpineitw.com; TPI: tpinst.org; SBCA: sbcacomponents.com; ICC: iccsafe.org; AWC: awc.org

ALPINE AN ITW COMPANY
155 Harlem Ave
North Building, 4th Floor
Glenview, IL 60025

SEQN: 656827 JACK FROM: CDM	Ply: 1 Qty: 1	**Job Number:** 22-7559 Judy Baughn **Truss Label:** J09	Cust: R 215 JRef: 1Xff2150006 T4 DrwNo: 131.22.0811.04210 KD / WHK 05/11/2022

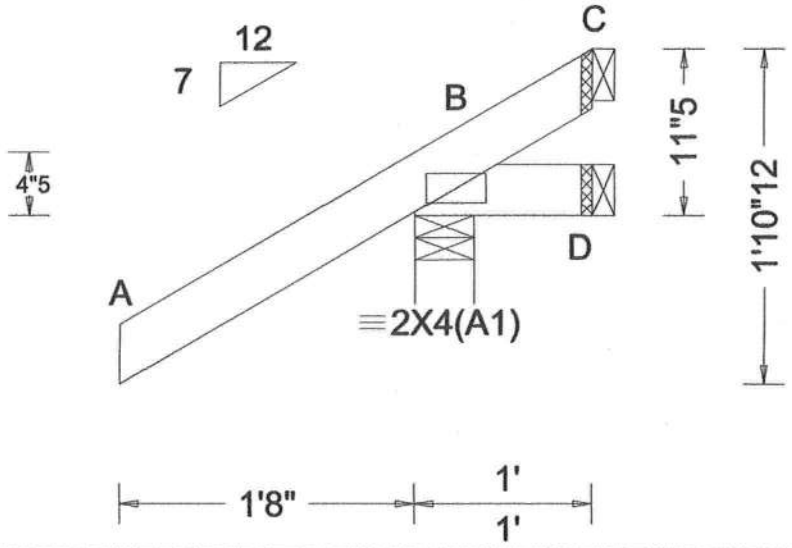

Loading Criteria (psf)	**Wind Criteria**	**Snow Criteria** (Pg,Pf in PSF)	**Defl/CSI Criteria**
TCLL: 20.00 TCDL: 10.00 BCLL: 0.00 BCDL: 10.00 Des Ld: 40.00 NCBCLL: 10.00 Soffit: 2.00 Load Duration: 1.25 Spacing: 24.0 "	Wind Std: ASCE 7-16 Speed: 130 mph Enclosure: Closed Risk Category: II EXP: C Kzt: NA Mean Height: 15.00 ft TCDL: 5.0 psf BCDL: 5.0 psf MWFRS Parallel Dist: 0 to h/2 C&C Dist a: 3.00 ft Loc. from endwall: Any GCpi: 0.18 Wind Duration: 1.60	Pg: NA Ct: NA CAT: NA Pf: NA Ce: NA Lu: NA Cs: NA Snow Duration: NA Building Code: FBC 7th Ed. 2020 Res. TPI Std: 2014 Rep Fac: Yes FT/RT:20(0)/10(0) Plate Type(s): WAVE	PP Deflection in loc L/defl L/# VERT(LL): NA VERT(CL): NA HORZ(LL): -0.000 B - - HORZ(TL): 0.001 B - - Creep Factor: 2.0 Max TC CSI: 0.309 Max BC CSI: 0.049 Max Web CSI: 0.000 VIEW Ver: 21.02.01.1214.12

▲ Maximum Reactions (lbs)

	Gravity			Non-Gravity		
Loc	R+	/ R-	/ Rh	/ Rw	/ U	/ RL
B	292	/-	/-	/238	/75	/47
D	2	/-23	/-	/17	/20	/-
C	-	/-72	/-	/42	/71	/-

Wind reactions based on MWFRS
B Brg Wid = 4.0 Min Req = 1.5 (Truss)
D Brg Wid = 1.5 Min Req = -
C Brg Wid = 1.5 Min Req = -
Bearing B is a rigid surface.
Members not listed have forces less than 375#

Lumber

Top chord: 2x4 SP #2;
Bot chord: 2x4 SP #2;

Wind

Wind loads based on MWFRS with additional C&C member design.

Wind loading based on both gable and hip roof types.

Additional Notes

The overall height of this truss excluding overhang is 0-11-5.

WILLIAM H. KRICK
LICENSE
No. 70861
STATE OF FLORIDA
PROFESSIONAL ENGINEER

COA #0278
05/11/2022
Florida Certificate of Product Approval #FL 1999

****WARNING**** READ AND FOLLOW ALL NOTES ON THIS DRAWING!
****IMPORTANT**** FURNISH THIS DRAWING TO ALL CONTRACTORS INCLUDING THE INSTALLERS

Trusses require extreme care in fabricating, handling, shipping, installing and bracing. Refer to and follow the latest edition of BCSI (Building Component Safety Information, by TPI and SBCA) for safety practices prior to performing these functions. Installers shall provide temporary bracing per BCSI. Unless noted otherwise, top chord shall have properly attached structural sheathing and bottom chord shall have a properly attached rigid ceiling. Locations shown for permanent lateral restraint of webs shall have bracing installed per BCSI sections B3, B7, or B10, as applicable. Apply plates to each face of truss and position as shown above and on the Joint Details, unless noted otherwise. Refer to drawings 160A-Z for standard plate positions. Refer to job's General Notes page for additional information.

Alpine, a division of ITW Building Components Group Inc. shall not be responsible for any deviation from this drawing, any failure to build the truss in conformance with ANSI/TPI 1, or for handling, shipping, installation and bracing of trusses. A seal on this drawing or cover page listing this drawing, indicates acceptance of professional engineering responsibility solely for the design shown. The suitability and use of this drawing for any structure is the responsibility of the Building Designer per ANSI/TPI 1 Sec.2.

For more information see these web sites: Alpine: alpineitw.com; TPI: tpinst.org; SBCA: sbcacomponents.com; ICC: iccsafe.org; AWC: awc.org

ALPINE
AN ITW COMPANY
155 Harlem Ave
North Building, 4th Floor
Glenview, IL 60025

SEQN: 656823 JACK FROM: CDM	Ply: 1 Qty: 1	**Job Number:** 22-7559 Judy Baughn **Truss Label:** J10	Cust: R 215 JRef: 1Xff2150006 T6 DrwNo: 131.22.0811.01340 KD / WHK 05/11/2022

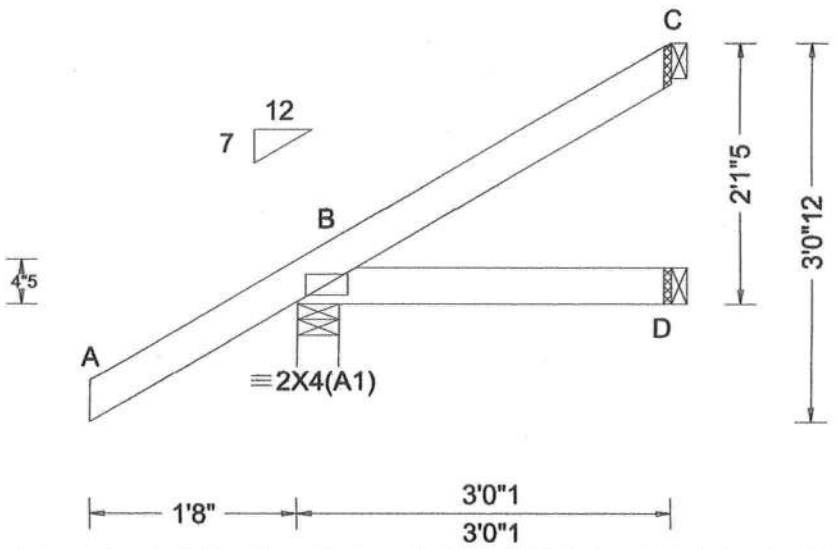

Loading Criteria (psf)	**Wind Criteria**	**Snow Criteria** (Pg,Pf in PSF)	**Defl/CSI Criteria**
TCLL: 20.00 TCDL: 10.00 BCLL: 0.00 BCDL: 10.00 Des Ld: 40.00 NCBCLL: 10.00 Soffit: 2.00 Load Duration: 1.25 Spacing: 24.0 "	Wind Std: ASCE 7-16 Speed: 130 mph Enclosure: Closed Risk Category: II EXP: C Kzt: NA Mean Height: 15.00 ft TCDL: 5.0 psf BCDL: 5.0 psf MWFRS Parallel Dist: 0 to h/2 C&C Dist a: 3.00 ft Loc. from endwall: Any GCpi: 0.18 Wind Duration: 1.60	Pg: NA Ct: NA CAT: NA Pf: NA Ce: NA Lu: NA Cs: NA Snow Duration: NA Building Code: FBC 7th Ed. 2020 Res. TPI Std: 2014 Rep Fac: Yes FT/RT:20(0)/10(0) Plate Type(s): WAVE	PP Deflection in loc L/defl L/# VERT(LL): NA VERT(CL): NA HORZ(LL): 0.001 B - - HORZ(TL): 0.001 B - - Creep Factor: 2.0 Max TC CSI: 0.308 Max BC CSI: 0.063 Max Web CSI: 0.000 VIEW Ver: 21.02.01.1214.12

▲ Maximum Reactions (lbs)

	Gravity			Non-Gravity		
Loc	R+	/ R-	/ Rh	/ Rw	/ U	/ RL
B	283	/-	/-	/208	/41	/88
D	49	/-	/-	/33	/-	/-
C	59	/-	/-	/37	/37	/-

Wind reactions based on MWFRS
B Brg Wid = 4.0 Min Req = 1.5 (Truss)
D Brg Wid = 1.5 Min Req = -
C Brg Wid = 1.5 Min Req = -
Bearing B is a rigid surface.
Members not listed have forces less than 375#

Lumber

Top chord: 2x4 SP #2;
Bot chord: 2x4 SP #2;

Wind

Wind loads based on MWFRS with additional C&C member design.

Wind loading based on both gable and hip roof types.

Additional Notes

The overall height of this truss excluding overhang is 2-1-5.

WILLIAM H. KRICK
LICENSE
No. 70861
STATE OF FLORIDA
PROFESSIONAL ENGINEER

COA #0278

05/11/2022

Florida Certificate of Product Approval #FL 1999

****WARNING**** READ AND FOLLOW ALL NOTES ON THIS DRAWING!
****IMPORTANT**** FURNISH THIS DRAWING TO ALL CONTRACTORS INCLUDING THE INSTALLERS

Trusses require extreme care in fabricating, handling, shipping, installing and bracing. Refer to and follow the latest edition of BCSI (Building Component Safety Information, by TPI and SBCA) for safety practices prior to performing these functions. Installers shall provide temporary bracing per BCSI. Unless noted otherwise, top chord shall have properly attached structural sheathing and bottom chord shall have a properly attached rigid ceiling. Locations shown for permanent lateral restraint of webs shall have bracing installed per BCSI sections B3, B7, or B10, as applicable. Apply plates to each face of truss and position as shown above and on the Joint Details, unless noted otherwise. Refer to drawings 160A-Z for standard plate positions. Refer to job's General Notes page for additional information.

Alpine, a division of ITW Building Components Group Inc. shall not be responsible for any deviation from this drawing, any failure to build the truss in conformance with ANSI/TPI 1, or for handling, shipping, installation and bracing of trusses. A seal on this drawing or cover page listing this drawing, indicates acceptance of professional engineering responsibility solely for the design shown. The suitability and use of this drawing for any structure is the responsibility of the Building Designer per ANSI/TPI 1 Sec.2.

For more information see these web sites: Alpine: alpineitw.com; TPI: tpinst.org; SBCA: sbcacomponents.com; ICC: iccsafe.org; AWC: awc.org

ALPINE AN ITW COMPANY
155 Harlem Ave
North Building, 4th Floor
Glenview, IL 60025

SEQN: 656821 EJAC FROM: CDM	Ply: 1 Qty: 3	**Job Number:** 22-7559 Judy Baughn **Truss Label:** J12	Cust: R 215 JRef: 1Xff2150006 T12 DrwNo: 131.22.0810.58220 KD / WHK 05/11/2022

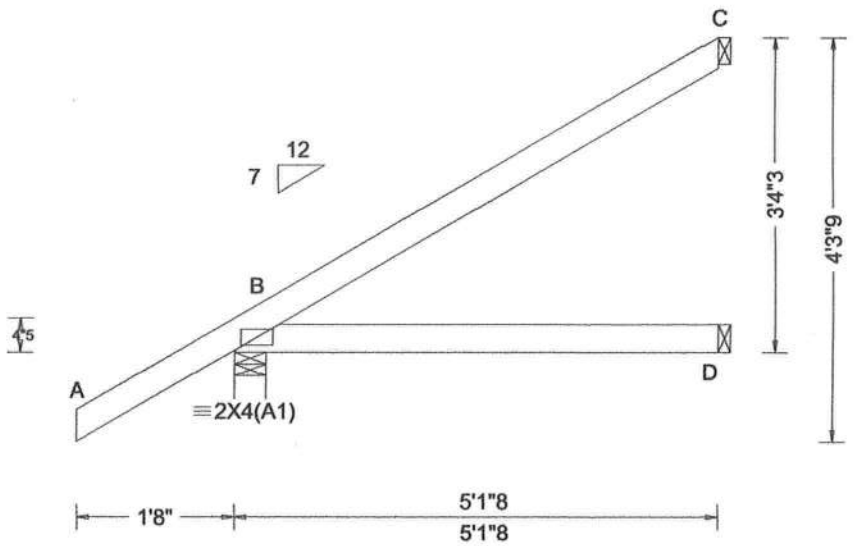

Loading Criteria (psf)	**Wind Criteria**	**Snow Criteria** (Pg,Pf in PSF)	**Defl/CSI Criteria**
TCLL: 20.00 TCDL: 10.00 BCLL: 0.00 BCDL: 10.00 Des Ld: 40.00 NCBCLL: 10.00 Soffit: 2.00 Load Duration: 1.25 Spacing: 24.0 "	Wind Std: ASCE 7-16 Speed: 130 mph Enclosure: Closed Risk Category: II EXP: C Kzt: NA Mean Height: 15.00 ft TCDL: 5.0 psf BCDL: 5.0 psf MWFRS Parallel Dist: 0 to h/2 C&C Dist a: 3.00 ft Loc. from endwall: not in 4.50 ft GCpi: 0.18 Wind Duration: 1.60	Pg: NA Ct: NA CAT: NA Pf: NA Ce: NA Lu: NA Cs: NA Snow Duration: NA Building Code: FBC 7th Ed. 2020 Res. TPI Std: 2014 Rep Fac: Yes FT/RT:20(0)/10(0) Plate Type(s): WAVE	PP Deflection in loc L/defl L/# VERT(LL): NA VERT(CL): NA HORZ(LL): 0.004 B - - HORZ(TL): 0.008 B - - Creep Factor: 2.0 Max TC CSI: 0.336 Max BC CSI: 0.248 Max Web CSI: 0.000 VIEW Ver: 21.02.01.1214.12

▲ Maximum Reactions (lbs)

	Gravity			Non-Gravity		
Loc	R+	/ R-	/ Rh	/ Rw	/ U	/ RL
B	355	/-	/-	/248	/38	/132
D	92	/-	/-	/54	/-	/-
C	131	/-	/-	/84	/73	/-

Wind reactions based on MWFRS
B Brg Wid = 4.0 Min Req = 1.5 (Truss)
D Brg Wid = 1.5 Min Req = -
C Brg Wid = 1.5 Min Req = -
Bearing B is a rigid surface.
Members not listed have forces less than 375#

Lumber

Top chord: 2x4 SP #2;
Bot chord: 2x4 SP #2;

Wind

Wind loads based on MWFRS with additional C&C member design.

Wind loading based on both gable and hip roof types.

Additional Notes

The overall height of this truss excluding overhang is 3-4-3.

WILLIAM H. KRICK
LICENSE
No. 70861
STATE OF
FLORIDA
PROFESSIONAL ENGINEER

COA #0278

06/11/2022

Florida Certificate of Product Approval #FL 1999

****WARNING**** READ AND FOLLOW ALL NOTES ON THIS DRAWING!
****IMPORTANT**** FURNISH THIS DRAWING TO ALL CONTRACTORS INCLUDING THE INSTALLERS

Trusses require extreme care in fabricating, handling, shipping, installing and bracing. Refer to and follow the latest edition of BCSI (Building Component Safety Information, by TPI and SBCA) for safety practices prior to performing these functions. Installers shall provide temporary bracing per BCSI. Unless noted otherwise, top chord shall have properly attached structural sheathing and bottom chord shall have a properly attached rigid ceiling. Locations shown for permanent lateral restraint of webs shall have bracing installed per BCSI sections B3, B7, or B10, as applicable. Apply plates to each face of truss and position as shown above and on the Joint Details, unless noted otherwise. Refer to drawings 160A-Z for standard plate positions. Refer to job's General Notes page for additional information.

Alpine, a division of ITW Building Components Group Inc. shall not be responsible for any deviation from this drawing, any failure to build the truss in conformance with ANSI/TPI 1, or for handling, shipping, installation and bracing of trusses. A seal on this drawing or cover page listing this drawing, indicates acceptance of professional engineering responsibility solely for the design shown. The suitability and use of this drawing for any structure is the responsibility of the Building Designer per ANSI/TPI 1 Sec.2.

For more information see these web sites: Alpine: alpineitw.com; TPI: tpinst.org; SBCA: sbcacomponents.com; ICC: iccsafe.org; AWC: awc.org

ALPINE
AN ITW COMPANY
155 Harlem Ave
North Building, 4th Floor
Glenview, IL 60025

SEQN: 656819 EJAC FROM: CDM	Ply: 1 Qty: 3	**Job Number:** 22-7559 Judy Baughn **Truss Label:** J13	Cust: R 215 JRef: 1Xff2150006 T36 DrwNo: 131.22.0810.56537 KD / WHK 05/11/2022

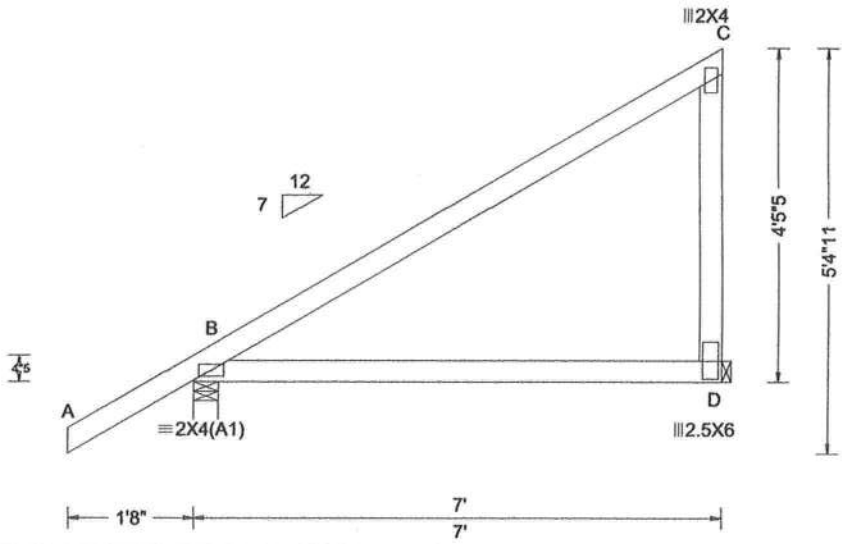

Loading Criteria (psf)	**Wind Criteria**	**Snow Criteria** (Pg,Pf in PSF)	**Defl/CSI Criteria**
TCLL: 20.00 TCDL: 10.00 BCLL: 0.00 BCDL: 10.00 Des Ld: 40.00 NCBCLL: 10.00 Soffit: 2.00 Load Duration: 1.25 Spacing: 24.0 "	Wind Std: ASCE 7-16 Speed: 130 mph Enclosure: Closed Risk Category: II EXP: C Kzt: NA Mean Height: 15.00 ft TCDL: 5.0 psf BCDL: 5.0 psf MWFRS Parallel Dist: h/2 to h C&C Dist a: 3.00 ft Loc. from endwall: not in 4.50 ft GCpi: 0.18 Wind Duration: 1.60	Pg: NA Ct: NA CAT: NA Pf: NA Ce: NA Lu: NA Cs: NA Snow Duration: NA Building Code: FBC 7th Ed. 2020 Res. TPI Std: 2014 Rep Fac: Yes FT/RT:20(0)/10(0) Plate Type(s): WAVE	PP Deflection in loc L/defl L/# VERT(LL): NA VERT(CL): NA HORZ(LL): 0.013 B - - HORZ(TL): 0.026 B - - Creep Factor: 2.0 Max TC CSI: 0.718 Max BC CSI: 0.515 Max Web CSI: 0.067 VIEW Ver: 21.02.01.1214.12

▲Maximum Reactions (lbs)

	Gravity			Non-Gravity		
Loc	R+	/ R-	/ Rh	/ Rw	/ U	/ RL
B	426	/-	/-	/291	/37	/171
D	269	/-	/-	/195	/85	/-

Wind reactions based on MWFRS
B Brg Wid = 4.0 Min Req = 1.5 (Truss)
D Brg Wid = 1.5 Min Req = -
Bearing B is a rigid surface.
Members not listed have forces less than 375#

Lumber

Top chord: 2x4 SP #2;
Bot chord: 2x4 SP #2;
Webs: 2x4 SP #3;

Wind

Wind loads based on MWFRS with additional C&C member design.

Right end vertical not exposed to wind pressure.

Wind loading based on both gable and hip roof types.

Additional Notes

The overall height of this truss excluding overhang is 4-5-5.

WILLIAM H. KRICK
LICENSE
No. 70861
STATE OF
FLORIDA
PROFESSIONAL ENGINEER

COA #0278

05/11/2022

Florida Certificate of Product Approval #FL 1999

****WARNING**** READ AND FOLLOW ALL NOTES ON THIS DRAWING!
****IMPORTANT**** FURNISH THIS DRAWING TO ALL CONTRACTORS INCLUDING THE INSTALLERS

Trusses require extreme care in fabricating, handling, shipping, installing and bracing. Refer to and follow the latest edition of BCSI (Building Component Safety Information, by TPI and SBCA) for safety practices prior to performing these functions. Installers shall provide temporary bracing per BCSI. Unless noted otherwise, top chord shall have properly attached structural sheathing and bottom chord shall have a properly attached rigid ceiling. Locations shown for permanent lateral restraint of webs shall have bracing installed per BCSI sections B3, B7, or B10, as applicable. Apply plates to each face of truss and position as shown above and on the Joint Details, unless noted otherwise. Refer to drawings 160A-Z for standard plate positions. Refer to job's General Notes page for additional information.

Alpine, a division of ITW Building Components Group Inc. shall not be responsible for any deviation from this drawing, any failure to build the truss in conformance with ANSI/TPI 1, or for handling, shipping, installation and bracing of trusses. A seal on this drawing or cover page listing this drawing, indicates acceptance of professional engineering responsibility solely for the design shown. The suitability and use of this drawing for any structure is the responsibility of the Building Designer per ANSI/TPI 1 Sec.2.

For more information see these web sites: Alpine: alpineitw.com; TPI: tpinst.org; SBCA: sbcacomponents.com; ICC: iccsafe.org; AWC: awc.org

ALPINE
AN ITW COMPANY
155 Harlem Ave
North Building, 4th Floor
Glenview, IL 60025

SEQN: 656815 EJAC FROM: CDM	Ply: 1 Qty: 5	**Job Number:** 22-7559 Judy Baughn **Truss Label:** J14	Cust: R 215 JRef: 1Xff2150006 T2 DrwNo: 131.22.0810.54740 KD / WHK 05/11/2022

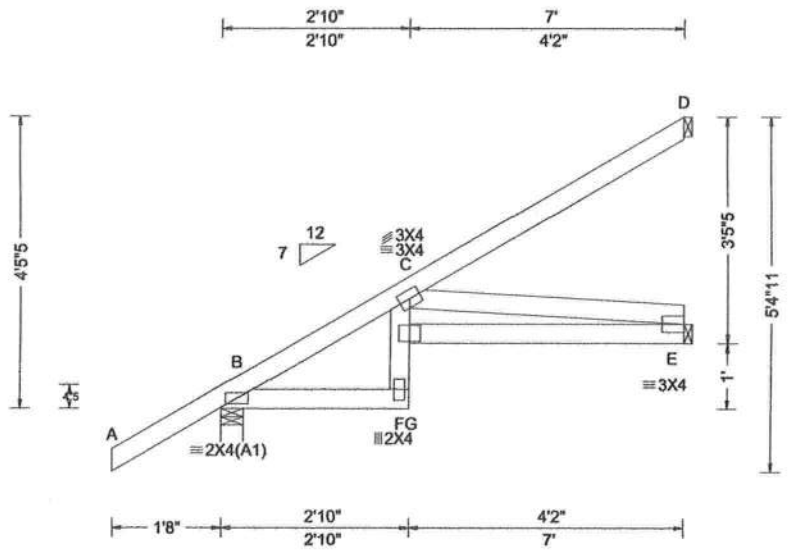

Loading Criteria (psf)	**Wind Criteria**	**Snow Criteria** (Pg,Pf in PSF)	**Defl/CSI Criteria**
TCLL: 20.00 TCDL: 10.00 BCLL: 0.00 BCDL: 10.00 Des Ld: 40.00 NCBCLL: 10.00 Soffit: 2.00 Load Duration: 1.25 Spacing: 24.0 "	Wind Std: ASCE 7-16 Speed: 130 mph Enclosure: Closed Risk Category: II EXP: C Kzt: NA Mean Height: 15.00 ft TCDL: 5.0 psf BCDL: 5.0 psf MWFRS Parallel Dist: h to 2h C&C Dist a: 3.00 ft Loc. from endwall: not in 9.00 ft GCpi: 0.18 Wind Duration: 1.60	Pg: NA Ct: NA CAT: NA Pf: NA Ce: NA Lu: NA Cs: NA Snow Duration: NA Building Code: FBC 7th Ed. 2020 Res. TPI Std: 2014 Rep Fac: Yes FT/RT:20(0)/10(0) Plate Type(s): WAVE	PP Deflection in loc L/defl L/# VERT(LL): 0.039 F 999 240 VERT(CL): 0.077 F 999 180 HORZ(LL): 0.025 E - - HORZ(TL): 0.050 E - - Creep Factor: 2.0 Max TC CSI: 0.322 Max BC CSI: 0.313 Max Web CSI: 0.905 VIEW Ver: 21.02.01.1214.12

▲ Maximum Reactions (lbs)

	Gravity			Non-Gravity		
Loc	R+	/ R-	/ Rh	/ Rw	/ U	/ RL
B	426	/-	/-	/291	/-	/123
E	155	/-	/-	/109	/-	/-
D	131	/-	/-	/86	/44	/-

Wind reactions based on MWFRS
B Brg Wid = 4.0 Min Req = 1.5 (Truss)
E Brg Wid = 1.5 Min Req = -
D Brg Wid = 1.5 Min Req = -
Bearing B is a rigid surface.
Members not listed have forces less than 375#

Maximum Bot Chord Forces Per Ply (lbs)

Chords	Tens.	Comp.
F - E	605	-536

Maximum Web Forces Per Ply (lbs)

Webs	Tens.	Comp.
C - E	538	-607

Lumber

Top chord: 2x4 SP #2;
Bot chord: 2x4 SP #2;
Webs: 2x4 SP #3;

Wind

Wind loads based on MWFRS with additional C&C member design.

Wind loading based on both gable and hip roof types.

Additional Notes

The overall height of this truss excluding overhang is 4-5-5.

COA #0278

Florida Certificate of Product Approval #FL 1999

06/11/2022

****WARNING**** READ AND FOLLOW ALL NOTES ON THIS DRAWING!
****IMPORTANT**** FURNISH THIS DRAWING TO ALL CONTRACTORS INCLUDING THE INSTALLERS

Trusses require extreme care in fabricating, handling, shipping, installing and bracing. Refer to and follow the latest edition of BCSI (Building Component Safety Information, by TPI and SBCA) for safety practices prior to performing these functions. Installers shall provide temporary bracing per BCSI. Unless noted otherwise, top chord shall have properly attached structural sheathing and bottom chord shall have a properly attached rigid ceiling. Locations shown for permanent lateral restraint of webs shall have bracing installed per BCSI sections B3, B7, or B10, as applicable. Apply plates to each face of truss and position as shown above and on the Joint Details, unless noted otherwise. Refer to drawings 160A-Z for standard plate positions. Refer to job's General Notes page for additional information.

Alpine, a division of ITW Building Components Group Inc. shall not be responsible for any deviation from this drawing, any failure to build the truss in conformance with ANSI/TPI 1, or for handling, shipping, installation and bracing of trusses. A seal on this drawing or cover page listing this drawing, indicates acceptance of professional engineering responsibility solely for the design shown. The suitability and use of this drawing for any structure is the responsibility of the Building Designer per ANSI/TPI 1 Sec.2.

For more information see these web sites: Alpine: alpineitw.com; TPI: tpinst.org; SBCA: sbcacomponents.com; ICC: iccsafe.org; AWC: awc.org

ALPINE
AN ITW COMPANY
155 Harlem Ave
North Building, 4th Floor
Glenview, IL 60025

Gable Stud Reinforcement Detail

ASCE 7-16: 140 mph Wind Speed, 15' Mean Height, Enclosed, Exposure C, Kzt = 1.00

Or: 120 mph Wind Speed, 15' Mean Height, Partially Enclosed, Exposure C, Kzt = 1.00
Or: 120 mph Wind Speed, 15' Mean Height, Enclosed, Exposure D, Kzt = 1.00
Or: 100 mph Wind Speed, 15' Mean Height, Partially Enclosed, Exposure D, Kzt = 1.00

Max Gable Vertical Length	2x4 Gable Vertical Spacing	Species	Brace Grade	No Braces	(1) 1x4 'L' Brace ✱ Group A	(1) 1x4 'L' Brace ✱ Group B	(1) 2x4 'L' Brace ✱ Group A	(1) 2x4 'L' Brace ✱ Group B	(2) 2x4 'L' Brace ✱✱ Group A	(2) 2x4 'L' Brace ✱✱ Group B	(1) 2x6 'L' Brace ✱ Group A	(1) 2x6 'L' Brace ✱ Group B	(2) 2x6 'L' Brace ✱✱ Group A	(2) 2x6 'L' Brace ✱✱ Group B
	24" o.c.	SPF HF	#1 / #2	4' 3"	7' 3"	7' 7"	8' 7"	8' 11"	10' 3"	10' 8"	13' 6"	14' 0"	14' 0"	14' 0"
			#3	4' 1"	6' 7"	7' 1"	8' 6"	8' 10"	10' 1"	10' 6"	13' 4"	13' 10"	14' 0"	14' 0"
			Stud	4' 1"	6' 7"	7' 0"	8' 6"	8' 10"	10' 1"	10' 6"	13' 4"	13' 10"	14' 0"	14' 0"
			Standard	4' 1"	5' 8"	6' 0"	7' 7"	8' 1"	10' 1"	10' 6"	11' 10"	12' 8"	14' 0"	14' 0"
		SP DFL	#1	4' 6"	7' 4"	7' 8"	8' 8"	9' 0"	10' 4"	10' 9"	13' 8"	14' 0"	14' 0"	14' 0"
			#2	4' 3"	7' 3"	7' 7"	8' 7"	8' 11"	10' 3"	10' 8"	13' 6"	14' 0"	14' 0"	14' 0"
			#3	4' 2"	6' 0"	6' 4"	7' 11"	8' 6"	10' 2"	10' 7"	12' 5"	13' 4"	14' 0"	14' 0"
			Stud	4' 2"	6' 0"	6' 4"	7' 11"	8' 6"	10' 2"	10' 7"	12' 5"	13' 4"	14' 0"	14' 0"
			Standard	4' 0"	5' 3"	5' 7"	7' 0"	7' 6"	9' 6"	10' 2"	11' 0"	11' 10"	14' 0"	14' 0"
	16" o.c.	SPF HF	#1 / #2	4' 11"	8' 4"	8' 8"	9' 10"	10' 3"	11' 8"	12' 2"	14' 0"	14' 0"	14' 0"	14' 0"
			#3	4' 8"	8' 1"	8' 8"	9' 8"	10' 1"	11' 7"	12' 1"	14' 0"	14' 0"	14' 0"	14' 0"
			Stud	4' 8"	8' 1"	8' 6"	9' 8"	10' 1"	11' 7"	12' 1"	14' 0"	14' 0"	14' 0"	14' 0"
			Standard	4' 8"	6' 11"	7' 5"	9' 3"	9' 11"	11' 7"	12' 1"	14' 0"	14' 0"	14' 0"	14' 0"
		SP DFL	#1	5' 1"	8' 5"	8' 9"	9' 11"	10' 4"	11' 10"	12' 4"	14' 0"	14' 0"	14' 0"	14' 0"
			#2	4' 11"	8' 4"	8' 8"	9' 10"	10' 3"	11' 8"	12' 2"	14' 0"	14' 0"	14' 0"	14' 0"
			#3	4' 9"	7' 4"	7' 9"	9' 9"	10' 2"	11' 8"	12' 1"	14' 0"	14' 0"	14' 0"	14' 0"
			Stud	4' 9"	7' 4"	7' 9"	9' 9"	10' 2"	11' 8"	12' 1"	14' 0"	14' 0"	14' 0"	14' 0"
			Standard	4' 8"	6' 5"	6' 10"	8' 7"	9' 2"	11' 7"	12' 1"	13' 6"	14' 0"	14' 0"	14' 0"
	12" o.c.	SPF HF	#1 / #2	5' 5"	9' 2"	9' 6"	10' 10"	11' 3"	11' 8"	13' 5"	14' 0"	14' 0"	14' 0"	14' 0"
			#3	5' 1"	9' 0"	9' 4"	10' 8"	11' 1"	12' 9"	13' 3"	14' 0"	14' 0"	14' 0"	14' 0"
			Stud	5' 1"	9' 0"	9' 4"	10' 8"	11' 1"	12' 9"	13' 3"	14' 0"	14' 0"	14' 0"	14' 0"
			Standard	5' 1"	8' 0"	8' 6"	10' 8"	11' 1"	12' 9"	13' 3"	14' 0"	14' 0"	14' 0"	14' 0"
		SP DFL	#1	5' 8"	9' 3"	9' 8"	10' 11"	11' 4"	13' 0"	13' 6"	14' 0"	14' 0"	14' 0"	14' 0"
			#2	5' 5"	9' 2"	9' 6"	10' 10"	11' 3"	12' 11"	13' 5"	14' 0"	14' 0"	14' 0"	14' 0"
			#3	5' 3"	8' 5"	9' 0"	10' 9"	11' 2"	12' 10"	13' 4"	14' 0"	14' 0"	14' 0"	14' 0"
			Stud	5' 3"	8' 5"	9' 0"	10' 9"	11' 2"	12' 10"	13' 4"	14' 0"	14' 0"	14' 0"	14' 0"
			Standard	5' 1"	7' 5"	7' 11"	9' 11"	10' 7"	12' 9"	13' 3"	14' 0"	14' 0"	14' 0"	14' 0"

Bracing Group Species and Grades:

Group A:

Spruce-Pine-Fir

#1 / #2	Standard
#3	Stud

Hem-Fir

#2	Stud
#3	Standard

Douglas Fir-Larch

#3
Stud
Standard

Southern Pine✱✱✱

#3
Stud
Standard

Group B:

Hem-Fir

#1 & Btr
#1

Douglas Fir-Larch

#1
#2

Southern Pine✱✱✱

#1
#2

1x4 Braces shall be SRB (Stress-Rated Board).

✱✱✱For 1x4 So. Pine use only Industrial 55 or Industrial 45 Stress-Rated Boards. Group B values may be used with these grades.

Gable Truss Detail Notes:

Wind Load deflection criterion is L/240.

Provide uplift connections for 55 plf over continuous bearing (5 psf TC Dead Load).

Gable end supports load from 4' 0" outlookers with 2' 0" overhang, or 12" plywood overhang.

Attach 'L' braces with 10d (0.128"x3.0" min) nails.

✱ For (1) 'L' brace: space nails at 2" o.c. in 18" end zones and 4" o.c. between zones.

✱✱For (2) 'L' braces: space nails at 3" o.c. in 18" end zones and 6" o.c. between zones.

'L' bracing must be a minimum of 80% of web member length.

Gable Vertical Plate Sizes

Vertical Length	No Splice
Less than 4' 0"	1X4 or 2X3
Greater than 4' 0"	3X4

+ Refer to common truss design for peak, splice, and heel plates.

Refer to the Building Designer for conditions not addressed by this detail.

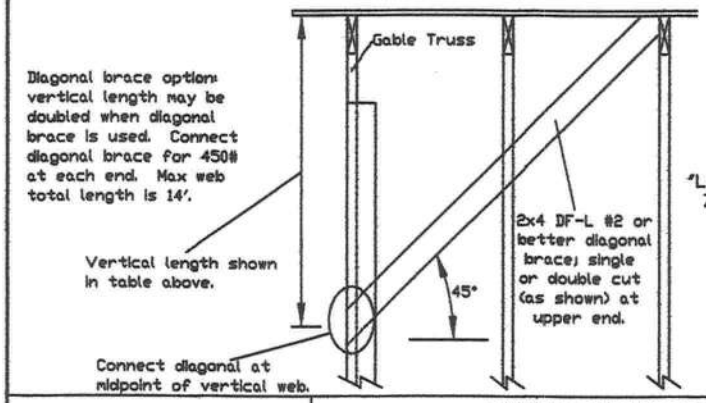

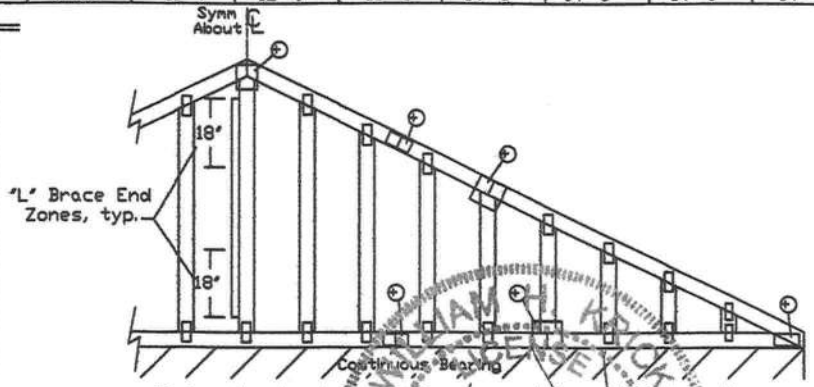

Refer to chart above for max gable vertical length.

✱✱✱WARNING✱✱✱ READ AND FOLLOW ALL NOTES ON THIS DRAWING
✱✱✱IMPORTANT✱✱✱ FURNISH THIS DRAWING TO ALL CONTRACTORS INCLUDING THE INSTALLERS.

Trusses require extreme care in fabricating, handling, shipping, installing and bracing. Refer to, and follow the latest edition of BCSI (Building Component Safety Information, by TPI and SBCA) for safety practices prior to performing these functions. Installers shall provide temporary bracing per BCSI. Unless noted otherwise, top chord shall have properly attached structural sheathing and bottom chord shall have a properly attached rigid ceiling. Locations shown for permanent lateral restraint of webs shall have bracing installed per BCSI sections B3, B7 or B10, as applicable. Apply plates to each face of truss and position as shown above and on the Joint Details, unless noted otherwise. Refer to drawings 160A-Z for standard plate positions.

Alpine, a division of ITW Building Components Group Inc. shall not be responsible for any deviation from this drawing, any failure to build the truss in conformance with ANSI/TPI 1, or for handling, shipping, installation & bracing of trusses.

A seal on this drawing or cover page listing this drawing, indicates acceptance of professional engineering responsibility solely for the design shown. The suitability and use of this drawing for any structure is the responsibility of the Building Designer per ANSI/TPI 1 Sec.2.

For more information see this job's general notes page and these web sites:

ALPINE
AN ITW COMPANY
155 Harlem Ave
North Building, 4th Floor
Glenview, IL 60025

WILLIAM H. KOCK
LICENSED
No. 70861
STATE OF FLORIDA
PROFESSIONAL ENGINEER
COA #0278
05/11/2022

MAX. TOT. LD. 60 PSF

REF	ASCE7-16-GAB14015
DATE	01/26/2018
DRWG	A14015ENC160118

Gable Detail
For Let-In Verticals

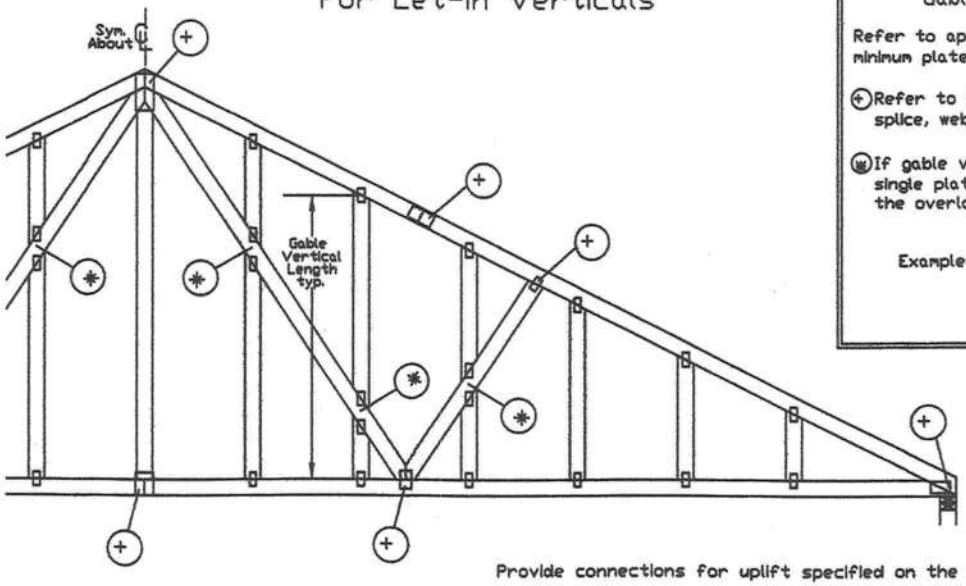

Gable Truss Plate Sizes

Refer to appropriate Alpine gable detail for minimum plate sizes for vertical studs.

(+) Refer to Engineered truss design for peak, splice, web, and heel plates.

(*) If gable vertical plates overlap, use a single plate that covers the total area of the overlapped plates to span the web.

Example:

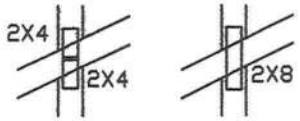

'T' Reinforcement Attachment Detail

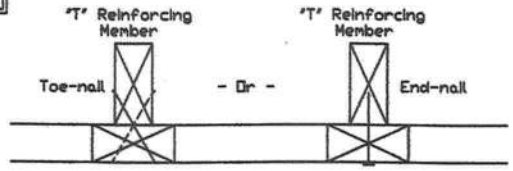

Provide connections for uplift specified on the engineered truss design.

Attach each 'T' reinforcing member with

End Driven Nails:
10d Common (0.148"x 3.",min) Nails at 4" o.c. plus
(4) nails in the top and bottom chords.

Toenailed Nails:
10d Common (0.148"x3",min) Toenails at 4" o.c. plus
(4) toenails in the top and bottom chords.

This detail to be used with the appropriate Alpine gable detail for ASCE wind load.

ASCE 7-05 Gable Detail Drawings
A13015051014, A12015051014, A11015051014, A10015051014, A14015051014, A13030051014, A12030051014, A11030051014, A10030051014, A14030051014

ASCE 7-10 & ASCE 7-16 Gable Detail Drawings
A11515ENC100118, A12015ENC100118, A14015ENC100118, A16015ENC100118, A18015ENC100118, A20015ENC100118, A20015END100118, A20015PED100118, A11530ENC100118, A12030ENC100118, A14030ENC100118, A16030ENC100118, A18030ENC100118, A20030ENC100118, A20030END100118, A20030PED100118, S11515ENC100118, S12015ENC100118, S14015ENC100118, S16015ENC100118, S18015ENC100118, S20015ENC100118, S20015END100118, S20015PED100118, S11530ENC100118, S12030ENC100118, S14030ENC100118, S16030ENC100118, S18030ENC100118, S20030ENC100118, S20030END100118, S20030PED100118

See appropriate Alpine gable detail for maximum unreinforced gable vertical length.

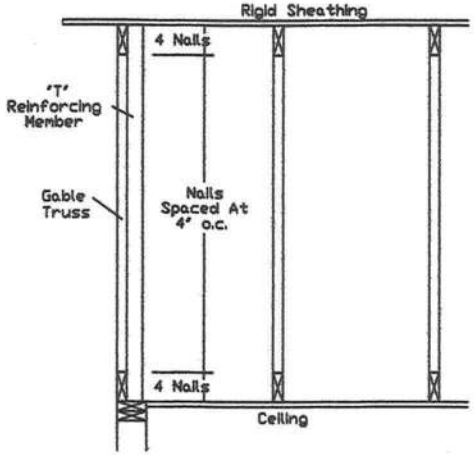

To convert from 'L' to 'T' reinforcing members, multiply 'T' increase by length (based on appropriate Alpine gable detail).

Maximum allowable 'T' reinforced gable vertical length is 14' from top to bottom chord.

'T' reinforcing member material must match size, specie, and grade of the 'L' reinforcing member.

Web Length Increase w/ 'T' Brace

'T' Reinf. Mbr. Size	'T' Increase
2x4	30 %
2x6	20 %

Example:
ASCE 7-10 Wind Speed = 120 mph
Mean Roof Height = 30 ft, Kzt = 1.00
Gable Vertical = 24"o.c. SP #3
'T' Reinforcing Member Size = 2x4
'T' Brace Increase (From Above) = 30% = 1.30
(1) 2x4 'L' Brace Length = 8' 7"
Maximum 'T' Reinforced Gable Vertical Length
1.30 x 8' 7" = 11' 2"

ALPINE
AN ITW COMPANY
155 Harlem Ave
North Building, 4th Floor
Glenview, IL 60026

WARNING READ AND FOLLOW ALL NOTES ON THIS DRAWING!
IMPORTANT FURNISH THIS DRAWING TO ALL CONTRACTORS INCLUDING THE INSTALLERS.

Trusses require extreme care in fabricating, handling, shipping, installing and bracing. Refer to and follow the latest edition of BCSI (Building Component Safety Information, by TPI and SBCA) for safety practices prior to performing these functions. Installers shall provide temporary bracing per BCSI. Unless noted otherwise, top chord shall have properly attached structural sheathing and bottom chord shall have a properly attached rigid ceiling. Locations shown for permanent lateral restraint of webs shall have bracing installed per BCSI sections B3, B7 or B10, as applicable. Apply plates to each face of truss and position as shown above and on the Joint Details, unless noted otherwise. Refer to drawings 160A-Z for standard plate positions.

Alpine, a division of ITW Building Components Group Inc. shall not be responsible for any deviation from this drawing, any failure to build the truss in conformance with ANSI/TPI 1, or for handling, shipping, installation & bracing of trusses.

A seal on this drawing or cover page listing this drawing, indicates acceptance of professional engineering responsibility solely for the design shown. The suitability and use of this drawing for any structure is the responsibility of the Building Designer per ANSI/TPI 1 Sec.2.

For more information see this job's general notes page and these web sites:

WILLIAM F. PRICK LICENSE No. 70861 STATE OF FLORIDA PROFESSIONAL ENGINEER

05/11/2022

COA #0278
Florida Certificate of Product Approval #FL 1990

MAX. TOT. LD. 60 PSF
DUR. FAC. ANY

REF	LET-IN VERT
DATE	01/02/2018
DRWG	GBLLETIN0118

CLR Reinforcing Member Substitution

This detail is to be used when a Continuous Lateral Restraint (CLR) is specified on a truss design but an alternative web reinforcement method is desired.

Notes:

This detail is only applicable for changing the specified CLR shown on single ply sealed designs to T-reinforcement or L-reinforcement or scab reinforcement.

Alternative reinforcement specified in chart below may be conservative. For minimum alternative reinforcement, re-run design with appropriate reinforcement type.

Use scabs instead of L- or T- reinforcement on webs with intersecting truss joints, such as K-web joints, that may interfere with proper application along the narrow face of the web.

Web Member Size	Specified CLR Restraint	Alternative Reinforcement T- or L- Reinf.	Alternative Reinforcement Scab Reinf.
2x3 or 2x4	1 row	2x4	1-2x4
2x3 or 2x4	2 rows	2x6	2-2x4
2x6	1 row	2x4	1-2x6
2x6	2 rows	2x6	2-2x4(*)
2x8	1 row	2x6	1-2x8
2x8	2 rows	2x6	2-2x6(*)

T-reinforcement, L-reinforcement, or scab reinforcement to be same species and grade or better than web member unless specified otherwise on Engineer's sealed design.

(*) Center scab on wide face of web. Apply (1) scab to each face of web.

T-Reinforcement or L-Reinforcement:

Apply to either side of web narrow face. Attach with 10d (0.128"x3.0",min) nails at 6" o.c. Reinforcing member is a minimum 80% of web member length.

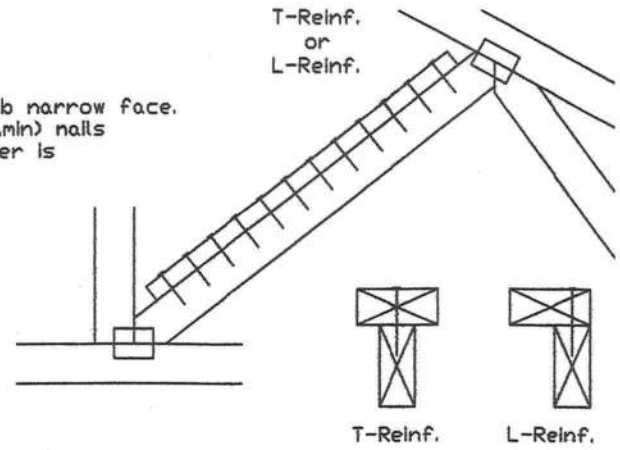

Scab Reinforcement:

Apply scab(s) to wide face of web. No more than (1) scab per face. Attach with 10d (0.128"x3.0",min) nails at 6" o.c. Reinforcing member is a minimum 80% of web member length.

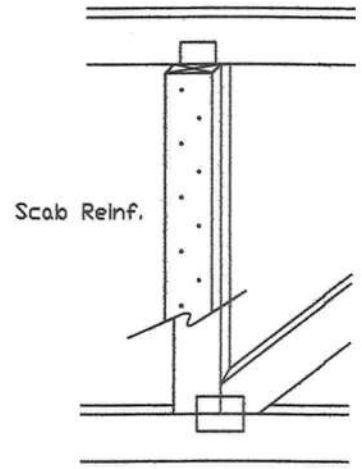

WILLIAM H. KRICK
LICENSE
No. 70861
STATE OF FLORIDA
PROFESSIONAL ENGINEER

ALPINE
AN ITW COMPANY
155 Harlem Ave
North Building, 4th Floor
Glenview, IL 60025

WARNING READ AND FOLLOW ALL NOTES ON THIS DRAWING!
IMPORTANT FURNISH THIS DRAWING TO ALL CONTRACTORS INCLUDING THE INSTALLERS.

Trusses require extreme care in fabricating, handling, shipping, installing and bracing. Refer to and follow the latest edition of BCSI (Building Component Safety Information, by TPI and SBCA) for safety practices prior to performing these functions. Installers shall provide temporary bracing per BCSI. Unless noted otherwise, top chord shall have properly attached structural sheathing and bottom chord shall have a properly attached rigid ceiling. Locations shown for permanent lateral restraint of webs shall have bracing installed per BCSI sections B3, B7 or B10, as applicable. Apply plates to each face of truss and position as shown above and on the Joint Details, unless noted otherwise. Refer to drawings 160A-Z for standard plate positions.

Alpine, a division of ITW Building Components Group Inc. shall not be responsible for any deviation from this drawing, any failure to build the truss in conformance with ANSI/TPI 1, or for handling, shipping, installation & bracing of trusses.

A seal on this drawing or cover page listing this drawing, indicates acceptance of professional engineering responsibility solely for the design shown. The suitability and use of this drawing for any structure is the responsibility of the Building Designer per ANSI/TPI 1 Sec.2.

For more information see this job's general notes page and these web sites:

TC LL	PSF	
TC DL	PSF	
BC DL	PSF	
BC LL	PSF	
TOT. LD.	PSF	
DUR. FAC.		

REF	CLR Subst.
DATE	01/02/19
DRWG	BRCLBSUB0119

COA #0 278 05/11/2022
Florida Certificate of Product Approval #FL 1999

NAIL SPACING DETAIL

MINIMUM SPACING FOR SINGLE BLOCK IS SHOWN. DOUBLE NAIL SPACINGS AND STAGGER NAILING FOR TWO BLOCKS. GREATER SPACING MAY BE REQUIRED TO AVOID SPLITTING.

BLOCK LOCATION, SIZE, LENGTH,GRADE AND TOTAL NUMBER AND TYPE OF NAILS ARE TO BE SPECIFIED ON SEALED DESIGN REFERENCING THIS DETAIL.

LOAD PERPENDICULAR TO GRAIN
A - EDGE DISTANCE AND SPACING BETWEEN STAGGERED ROWS OF NAILS (6 NAIL DIAMETERS)
B - SPACING OF NAILS IN A ROW (12 NAIL DIAMETERS)
C - END DISTANCE (15 NAIL DIAMETERS)

LOAD PARALLEL TO GRAIN
A - EDGE DISTANCE (6 NAIL DIAMETERS)
C - SPACING OF NAILS IN A ROW AND END DISTANCE (15 NAIL DIAMETERS)
D - SPACING BETWEEN STAGGERED ROWS OF NAILS (7 1/2 NAIL DIAMETERS)

IF NAIL HOLES ARE PREBORED, SOME SPACING MAY BE REDUCED BY THE AMOUNTS GIVEN BELOW:
* SPACING MAY BE REDUCED BY 50%
** SPACING MAY BE REDUCED BY 33%

MINIMUM NAIL SPACING DISTANCES

NAIL TYPE	DISTANCES A	B*	C**	D
8d BOX (0.113"X 2.5",MIN)	3/4"	1 3/8"	1 3/4"	7/8"
10d BOX (0.128"X 3.",MIN)	7/8"	1 5/8"	2"	1"
12d BOX (0.128"X 3.25",MIN)	7/8"	1 5/8"	2"	1"
16d BOX (0.135"X 3.5",MIN)	7/8"	1 5/8"	2 1/8"	1 1/8"
20d BOX (0.148"X 4.",MIN)	1"	1 7/8"	2 1/4"	1 1/8"
8d COMMON (0.131"X 2.5",MIN)	7/8"	1 5/8"	2"	1"
10d COMMON (0.148"X 3.",MIN)	1"	1 7/8"	2 1/4"	1 1/8"
12d COMMON (0.148"X 3.25",MIN)	1"	1 7/8"	2 1/4"	1 1/8"
16d COMMON (0.162"X 3.5",MIN)	1'	2"	2 1/2"	1 1/4"
GUN (0.120"X 2.5",MIN)	3/4"	1 1/2"	1 7/8"	1"
GUN (0.131"X 2.5",MIN)	7/8"	1 5/8"	2"	1"
GUN (0.120"X 3.",MIN)	3/4"	1 1/2"	1 7/8"	1"
GUN (0.131"X 3.",MIN)	7/8"	1 5/8"	2"	1"

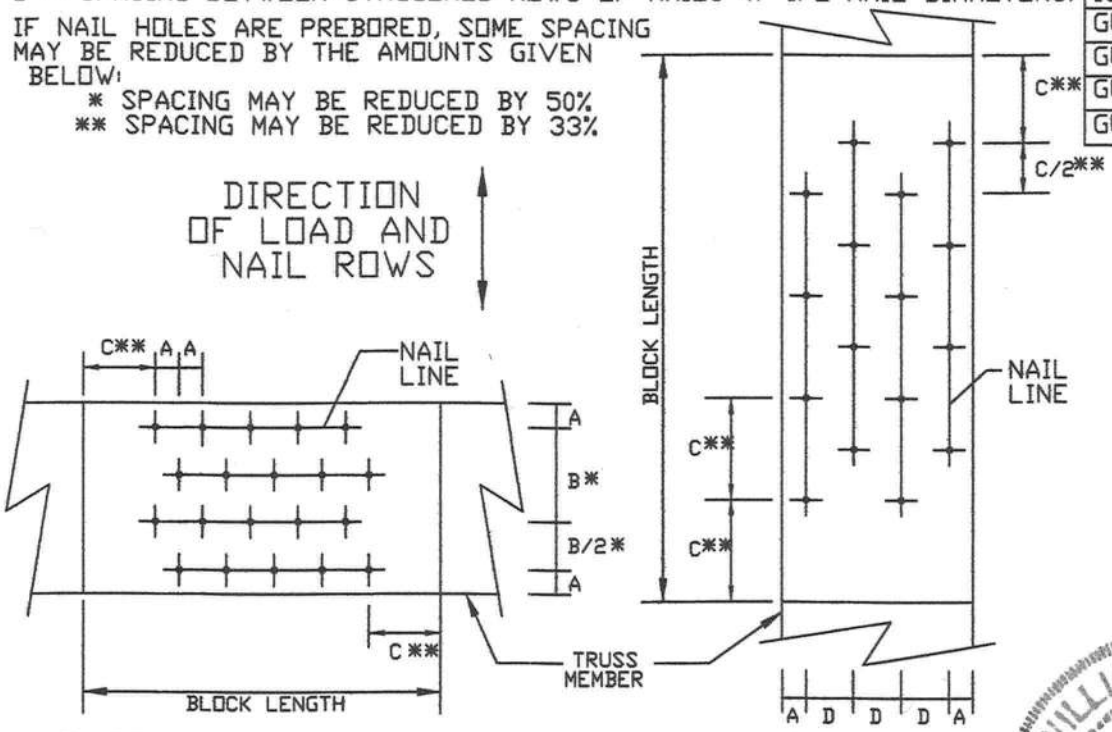

LOAD APPLIED PERPENDICULAR TO GRAIN LOAD APPLIED PARALLEL TO GRAIN

WILLIAM H. KRICK LICENSE No. 70801 STATE OF FLORIDA PROFESSIONAL ENGINEER

WARNING READ AND FOLLOW ALL NOTES ON THIS DRAWING!
IMPORTANT FURNISH THIS DRAWING TO ALL CONTRACTORS INCLUDING THE INSTALLERS.

Trusses require extreme care in fabricating, handling, shipping, installing and bracing. Refer to and follow the latest edition of BCSI (Building Component Safety Information, by TPI and SBCA) for safety practices prior to performing these functions. Installers shall provide temporary bracing per BCSI. Unless noted otherwise, top chord shall have properly attached structural sheathing and bottom chord shall have a properly attached rigid ceiling. Locations shown for permanent lateral restraint of webs shall have bracing installed per BCSI sections B3, B7 or B10, as applicable. Apply plates to each face of truss and position as shown above and on the Joint Details, unless noted otherwise. Refer to drawings 160A-Z for standard plate positions.

Alpine, a division of ITW Building Components Group Inc. shall not be responsible for any deviation from this drawing, any failure to build the truss in conformance with ANSI/TPI 1, or for handling, shipping, installation & bracing of trusses.

A seal on this drawing or cover page listing this drawing, indicates acceptance of professional engineering responsibility solely for the design shown. The suitability and use of this drawing for any structure is the responsibility of the Building Designer per ANSI/TPI 1 Sec.2.

For more information see this job's general notes page and these web sites:

ALPINE AN ITW COMPANY
155 Harlem Ave
North Building, 4th Floor
Glenview, IL 60025

COA #0 278 05/11/2022
Florida Certificate of Product Approval #FL 1999

REF	NAIL SPACE
DATE	10/01/14
DRWG	CNNAILSP1014

This document has been electronically signed using a Digital Signature. Printed copies without an original signature must be verified using the original electronic version.

WILLIAM H. KRICK
LICENSE
No. 70861
STATE OF
FLORIDA
PROFESSIONAL ENGINEER

COA #0 278

Florida Certificate of Product Approval #FL 1999
05/11/2022

Alpine, an ITW Company
155 Harlem Ave
North Building, 4th Floor
Glenview, IL 60025
Phone: (800)755-6001
www.alpineitw.com

Site Information:	Page 1:
Customer: W. B. Howland Company, Inc.	*Job Number:* 22-7559
Job Description: Judy Baughn	
Address: Lot 11 Marion Place, LAKE CITY, FL	

Job Engineering Criteria:	
Design Code: FBC 7th Ed. 2020 Res.	*IntelliVIEW Version:* 21.02.01 *JRef #:* 1Xff2150006
Wind Standard: ASCE 7-16 *Wind Speed (mph):* 130 *Building Type:* Closed	*Design Loading (psf):* 40.00

This package contains general notes pages, 49 truss drawing(s) and 4 detail(s).

Item	Drawing Number	Truss	Item	Drawing Number	Truss
1	131.22.0817.12267	A01	2	131.22.0816.09757	B01
3	131.22.0815.58500	B02	4	131.22.0815.46707	B03
5	131.22.0815.44870	B04	6	131.22.0815.16527	B05
7	131.22.0815.14730	C01	8	131.22.0814.57893	C02
9	131.22.0814.55547	C03	10	131.22.0814.53603	C04
11	131.22.0814.51437	C05	12	131.22.0814.49760	C06
13	131.22.0814.47757	C07	14	131.22.0814.45207	C08
15	131.22.0814.43433	C09	16	131.22.0814.41420	C10
17	131.22.0814.39027	C11	18	131.22.0814.27277	D01
19	131.22.0814.14407	D02	20	131.22.0814.05043	D03
21	131.22.0814.03123	D04	22	131.22.0814.01340	D05
23	131.22.0813.59597	D06	24	131.22.0813.53477	D07
25	131.22.0813.51707	D08	26	131.22.0813.49880	D09
27	131.22.0813.47980	D10	28	131.22.0813.46337	D11
29	131.22.0813.44613	D12	30	131.22.0813.42793	D13
31	131.22.0813.40353	D14	32	131.22.0812.08730	HJ01
33	131.22.0811.57737	HJ02	34	131.22.0811.42820	HJ03
35	131.22.0811.31850	HJ04	36	131.22.0811.24277	J01
37	131.22.0811.22030	J02	38	131.22.0811.19360	J03
39	131.22.0811.16060	J04	40	131.22.0811.13483	J05
41	131.22.0811.10740	J06	42	131.22.0811.08660	J07
43	131.22.0811.06047	J08	44	131.22.0811.04210	J09
45	131.22.0811.01340	J10	46	131.22.0810.59670	J11
47	131.22.0810.58220	J12	48	131.22.0810.56537	J13
49	131.22.0810.54740	J14	50	A14015ENC160118	

This document has been electronically signed using a Digital Signature. Printed copies without an original signature must be verified using the original electronic version.

WILLIAM H. KRICK
LICENSE
No. 70861
STATE OF
FLORIDA
PROFESSIONAL ENGINEER

COA #0 278

Florida Certificate of Product Approval #FL 1999
05/11/2022

Alpine, an ITW Company
155 Harlem Ave
North Building, 4th Floor
Glenview, IL 60025
Phone: (800)755-6001
www.alpineitw.com

Site Information:	Page 2:
Customer: W. B. Howland Company, Inc.	*Job Number:* 22-7559
Job Description: Judy Baughn	
Address: Lot 11 Marion Place, LAKE CITY, FL	

Item	Drawing Number	Truss
51	GBLLETIN0118	
53	CNNAILSP1014	

Item	Drawing Number	Truss
52	BRCLBSUB0119	

General Notes

Truss Design Engineer Scope of Work, Design Assumptions and Design Responsibilities:
The design responsibilities assumed in the preparation of these design drawings are those specified in ANSI/TPI 1, Chapter 2; and the National Design Standard for Metal Plate Connected Wood Truss Construction, by the Truss Plate Institute. The truss component designs conform to the applicable provisions of ANSI/TPI 1 and NDS, the National Design Specification for Wood Construction by AWC. The truss component designs are based on the specified loading and dimension information furnished by others to the Truss Design Engineer. The Truss Design Engineer has no duty to independently verify the accuracy or completeness of the information provided by others and may rely on that information without liability. The responsibility for verification of that information remains with others neither employed nor controlled by the Truss Design Engineer. The Truss Design Engineer's seal and signature on the attached drawings, or cover page listing these drawings, indicates acceptance of professional engineering responsibility solely for the truss component designs and not for the technical information furnished by others which technical information and consequences thereof remain their sole responsibility.

The suitability and use of these drawings for any particular structure is the responsibility of the Building Designer in accordance with ANSI/TPI 1 Chapter 2. The Building Designer is responsible for determining that the dimensions and loads for each truss component match those required by the plans and by the actual use of the individual component, and for ascertaining that the loads shown on the drawings meet or exceed applicable building code requirements and any additional factors required in the particular application. Truss components using metal connector plates with integral teeth shall not be placed in environments that will cause the moisture content of the wood in which plates are embedded to exceed 19% and/or cause corrosion of connector plates and other metal fasteners.

The Truss Design Engineer shall not be responsible for items beyond the specific scope of the agreed contracted work set forth herein, including but not limited to: verifying the dimensions of the truss component, calculation of any of the truss component design loads, inspection of the truss components before or after installation, the design of temporary or permanent bracing and their attachment required in the roof and/or floor systems, the design of diaphragms or shear walls, the design of load transfer connections to and from diaphragms and shear walls, the design of load transfer to the foundation, the design of connections for truss components to their bearing supports, the design of the bearing supports, installation of the truss components, observation of the truss component installation process, review of truss assembly procedures, sequencing of the truss component installation, construction means and methods, site and/or worker safety in the installation of the truss components and/or its connections.

This document may be a high quality facsimile of the original engineering document which is a digitally signed electronic file with third party authentication. A wet or embossed seal copy of this engineering document is available upon request.

Temporary Lateral Restraint and Bracing:
Temporary lateral restraint and diagonal bracing shall be installed according to the provisions of BCSI chapters B1, B2, B7 and/or B10 (Building Component Safety Information, by TPI and SBCA), or as specified by the Building Designer or other Registered Design Professional. The required locations for lateral restraint and/or bracing depicted on these drawings are only for the permanent lateral support of the truss members to reduce buckling lengths, and do not apply to and may not be relied upon for the temporary stability of the truss components during their installation.

Permanent Lateral Restraint and Bracing:
The required locations for lateral restraint or bracing depicted on these drawings are for the permanent lateral support of the truss members to reduce buckling lengths. Permanent lateral support shall be installed according to the provisions of BCSI chapters B3, B7 and/or B10, or as specified by the Building Designer or other Registered Design Professional. These drawings do not depict or specify installation/erection bracing, wind bracing, portal bracing or similar building stability bracing which are parts of the overall building design to be specified, designed and detailed by the Building Designer.

Connector Plate Information:
Alpine connector plates are made of ASTM A653 or ASTM A1063 galvanized steel with the following designations, gauges and grades: W=Wave, 20ga, grade 40; H=High Strength, 20ga, grade 60; S=Super Strength, 18ga, grade 60. Information on model code compliance is contained in the ICC Evaluation Service report ESR-1118, available on-line at www.icc-es.org.

Fire Retardant Treated Lumber:
Fire retardant treated lumber must be properly re-dried and maintained below 19% or less moisture level through all stages of construction and usage. Fire retardant treated lumber may be more brittle than untreated lumber. Special handling care must be taken to prevent breakage during all handling activities.

General Notes (continued)

Key to Terms:
Information provided on drawings reflects a summary of the pertinent information required for the truss design. Detailed information on load cases, reactions, member lengths, forces and members requiring permanent lateral support may be found in calculation sheets available upon written request.

BCDL = Bottom Chord standard design Dead Load in pounds per square foot.
BCLL = Bottom Chord standard design Live Load in pounds per square foot.
CL = Certified lumber.
Des Ld = total of TCLL, TCDL, BCLL and BCDL Design Load in pounds per square foot.
FRT = Fire Retardant Treated lumber.
FRT-DB = D-Blaze Fire Retardant Treated lumber.
FRT-DC = Dricon Fire Retardant Treated lumber.
FRT-FP = FirePRO Fire Retardant Treated lumber.
FRT-FL = FlamePRO Fire Retardant Treated lumber.
FRT-FT = FlameTech Fire Retardant Treated lumber.
FRT-PG = PYRO-GUARD Fire Retardant Treated lumber.
g = green lumber.
HORZ(LL) = maximum Horizontal panel point deflection due to Live Load, in inches.
HORZ(TL) = maximum Horizontal panel point long term deflection in inches, due to Total Load, including creep adjustment.
HPL = additional Horizontal Load added to a truss Piece in pounds per linear foot or pounds.
Ic = Incised lumber.
FJ = Finger Jointed lumber.
L/# = user specified divisor for limiting span/deflection ratio for evaluation of actual L/defl value.
L/defl = ratio of Length between bearings, in inches, divided by the vertical Deflection due to creep, in inches, at the referenced panel point. Reported as 999 if greater than or equal to 999.
Loc = Location, starting location of left end of bearing or panel point (joint) location of deflection.
Max BC CSI = Maximum bending and axial Combined Stress Index for Bottom Chords for of all load cases.
Max TC CSI = Maximum bending and axial Combined Stress Index for Top Chords for of all load cases.
Max Web CSI= Maximum bending and axial Combined Stress Index for Webs for of all load cases.
NCBCLL = Non-Concurrent Bottom Chord design Live Load in pounds per square foot.
PL = additional Load applied at a user specified angle on a truss Piece in pounds per linear foot or pounds.
PLB = additional vertical load added to a Bottom chord Piece of a truss in pounds per linear foot or pounds
PLT = additional vertical load added to a Top chord Piece of a truss in pounds per linear foot or pounds.
PP = Panel Point.
R = maximum downward design Reaction, in pounds, from all specified gravity load cases, at the indicated location (Loc).
-R = maximum upward design Reaction, in pounds, from all specified gravity load cases, at the identified location (Loc).
Rh = maximum horizontal design Reaction in either direction, in pounds, from all specified gravity load cases, at the indicated location (Loc).
RL = maximum horizontal design Reaction in either direction, in pounds, from all specified non-gravity (wind or seismic) load cases, at the indicated location (Loc).
Rw = maximum downward design Reaction, in pounds, from all specified non-gravity (wind or seismic) load cases, at the identified location (Loc).
TCDL = Top Chord standard design Dead Load in pounds per square foot.
TCLL = Top Chord standard design Live Load in pounds per square foot.
U = maximum Upward design reaction, in pounds, from all specified non-gravity (wind or seismic) load cases, at the indicated location (Loc).
VERT(CL) = maximum Vertical panel point deflection in inches due to Live Load and Creep Component of Dead Load in inches.
VERT(CTL) = maximum Vertical panel point deflection ratios due to Live Load and Creep Component of Dead Load, and maximum long term Vertical panel point deflection in inches due to Total load, including creep adjustment.
VERT(LL) = maximum Vertical panel point deflection in inches due to Live Load.
VERT(TL) = maximum Vertical panel point long term deflection in inches due to Total load, including creep adjustment.
W = Width of non-hanger bearing, in inches.

Refer to ASCE-7 for Wind and Seismic abbreviations.
Uppercase Acronyms not explained above are as defined in TPI 1.

References:

1. AWC: American Wood Council; 222 Catoctin Circle SE, Suite 201; Leesburg, VA 20175; www.awc.org.
2. ICC: International Code Council; www.iccsafe.org.
3. Alpine, a division of ITW Building Components Group Inc.: 155 Harlem Ave, North Building, 4th Floor, Glenview, IL 60025; www.alpineitw.com.
4. TPI: Truss Plate Institute, 2670 Crain Highway, Suite 203, Waldorf, MD 20601; www.tpinst.org.
5. SBCA: Wood Truss Council of America, 6300 Enterprise Lane, Madison, WI 53719; www. sbcacomponents.com.

SEQN: 656852 HIPS	Ply: 2	Job Number: 22-7559	Cust: R 215 JRef: 1Xff2150006 T24
FROM: CDM	Qty: 1	Judy Baughn	DrwNo: 131.22.0817.12267
		Truss Label: A01	KD / WHK 05/11/2022

2 Complete Trusses Required

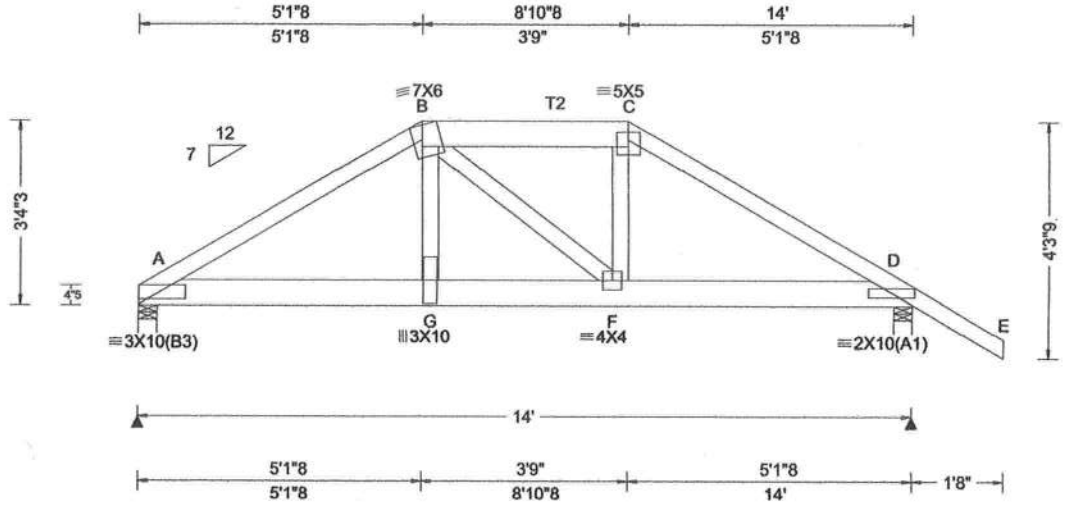

Loading Criteria (psf)
TCLL: 20.00
TCDL: 10.00
BCLL: 0.00
BCDL: 10.00
Des Ld: 40.00
NCBCLL: 10.00
Soffit: 2.00
Load Duration: 1.25
Spacing: 24.0 "

Wind Criteria
Wind Std: ASCE 7-16
Speed: 130 mph
Enclosure: Closed
Risk Category: II
EXP: C Kzt: NA
Mean Height: 15.00 ft
TCDL: 5.0 psf
BCDL: 5.0 psf
MWFRS Parallel Dist: 0 to h/2
C&C Dist a: 3.00 ft
Loc. from endwall: not in 4.50 ft
GCpi: 0.18
Wind Duration: 1.60

Snow Criteria (Pg,Pf in PSF)
Pg: NA Ct: NA CAT: NA
Pf: NA Ce: NA
Lu: NA Cs: NA
Snow Duration: NA

Building Code:
FBC 7th Ed. 2020 Res.
TPI Std: 2014
Rep Fac: Varies by Ld Case
FT/RT:20(0)/10(0)
Plate Type(s):
WAVE

Defl/CSI Criteria

PP Deflection in	loc	L/defl	L/#
VERT(LL): 0.053	G	999	240
VERT(CL): 0.107	G	999	180
HORZ(LL): 0.014	D	-	-
HORZ(TL): 0.027	D	-	-

Creep Factor: 2.0
Max TC CSI: 0.514
Max BC CSI: 0.475
Max Web CSI: 0.738

VIEW Ver: 21.02.01.1214.12

▲ Maximum Reactions (lbs)

Loc	Gravity R+	Gravity /R-	Gravity /Rh	Non-Gravity /Rw	Non-Gravity /U	Non-Gravity /RL
A	4984	/-	/-	/-	/967	/-
D	3095	/-	/-	/-	/697	/-

Wind reactions based on MWFRS
A Brg Wid = 4.0 Min Req = 2.1 (Truss)
D Brg Wid = 4.0 Min Req = 1.5 (Truss)
Bearings A & D are a rigid surface.
Members not listed have forces less than 375#

Maximum Top Chord Forces Per Ply (lbs)

Chords	Tens.	Comp.	Chords	Tens.	Comp.
A - B	737	-3431	C - D	631	-2785
B - C	553	-2493			

Maximum Bot Chord Forces Per Ply (lbs)

Chords	Tens.	Comp.	Chords	Tens.	Comp.
A - G	2957	-630	F - D	2378	-534
G - F	3053	-646			

Maximum Web Forces Per Ply (lbs)

Webs	Tens.	Comp.	Webs	Tens.	Comp.
B - G	1936	-331	F - C	1157	-196
B - F	122	-733			

Lumber

Top chord: 2x4 SP #2; T2 2x6 SP #2;
Bot chord: 2x6 SP 2400f-2.0E;
Webs: 2x4 SP #3;

Nailnote

Nail Schedule:0.131"x3", min. nails
Top Chord: 1 Row @12.00" o.c.
Bot Chord: 1 Row @ 3.25" o.c.
Webs : 1 Row @ 4" o.c.
Use equal spacing between rows and stagger nails in each row to avoid splitting.

Special Loads

------(Lumber Dur.Fac.=1.25 / Plate Dur.Fac.=1.25)

TC: From	63 plf at	0.00 to	63 plf at	2.93
TC: From	32 plf at	2.93 to	32 plf at	8.87
TC: From	63 plf at	8.87 to	63 plf at	15.66
BC: From	10 plf at	0.00 to	10 plf at	8.84
BC: From	20 plf at	8.84 to	20 plf at	14.00
BC: From	5 plf at	14.00 to	5 plf at	15.66

TC: 209 lb Conc. Load at 5.15, 8.84
TC: 131 lb Conc. Load at 7.00
BC: 1159 lb Conc. Load at 0.93
BC: 1154 lb Conc. Load at 2.93, 4.93
BC: 221 lb Conc. Load at 5.15, 8.84
BC: 2620 lb Conc. Load at 6.93

Purlins

In lieu of structural panels use purlins to brace all flat TC @ 24" oc.

Wind

Wind loads and reactions based on MWFRS.
Wind loading based on both gable and hip roof types.

Additional Notes

The overall height of this truss excluding overhang is 3-4-3.

WILLIAM H. KRICK
LICENSE
No. 70861
STATE OF FLORIDA
PROFESSIONAL ENGINEER

COA #0278
05/11/2022
Florida Certificate of Product Approval #FL 1999

****WARNING**** READ AND FOLLOW ALL NOTES ON THIS DRAWING!
****IMPORTANT**** FURNISH THIS DRAWING TO ALL CONTRACTORS INCLUDING THE INSTALLERS

Trusses require extreme care in fabricating, handling, shipping, installing and bracing. Refer to and follow the latest edition of BCSI (Building Component Safety Information, by TPI and SBCA) for safety practices prior to performing these functions. Installers shall provide temporary bracing per BCSI. Unless noted otherwise, top chord shall have properly attached structural sheathing and bottom chord shall have a properly attached rigid ceiling. Locations shown for permanent lateral restraint of webs shall have bracing installed per BCSI sections B3, B7, or B10, as applicable. Apply plates to each face of truss and position as shown above and on the Joint Details, unless noted otherwise. Refer to drawings 160A-Z for standard plate positions. Refer to job's General Notes page for additional information.

Alpine, a division of ITW Building Components Group Inc. shall not be responsible for any deviation from this drawing, any failure to build the truss in conformance with ANSI/TPI 1, or for handling, shipping, installation and bracing of trusses. A seal on this drawing or cover page listing this drawing, indicates acceptance of professional engineering responsibility solely for the design shown. The suitability and use of this drawing for any structure is the responsibility of the Building Designer per ANSI/TPI 1 Sec.2.

For more information see these web sites: Alpine: alpineitw.com; TPI: tpinst.org; SBCA: sbcacomponents.com; ICC: iccsafe.org; AWC: awc.org

ALPINE AN ITW COMPANY
155 Harlem Ave
North Building, 4th Floor
Glenview, IL 60025

SEQN: 656904 COMN FROM: CDM	Ply: 1 Qty: 1	**Job Number:** 22-7559 Judy Baughn **Truss Label:** B01	Cust: R 215 JRef: 1Xff2150006 T8 DrwNo: 131.22.0816.09757 KD / WHK 05/11/2022

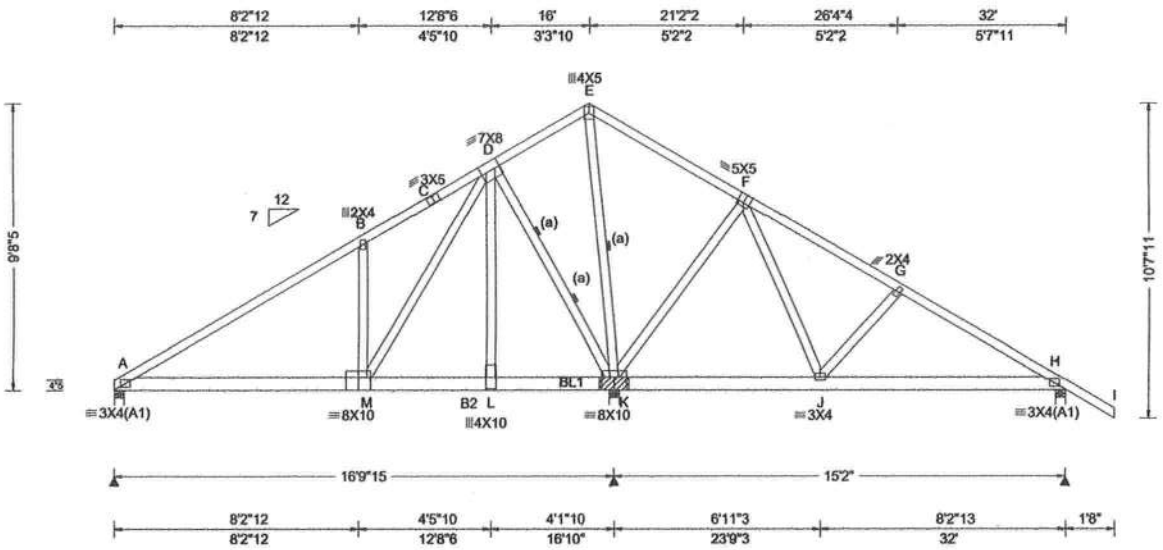

Loading Criteria (psf)

TCLL:	20.00
TCDL:	10.00
BCLL:	0.00
BCDL:	10.00
Des Ld:	40.00
NCBCLL:	10.00
Soffit:	2.00

Load Duration: 1.25
Spacing: 24.0 "

Wind Criteria
Wind Std: ASCE 7-16
Speed: 130 mph
Enclosure: Closed
Risk Category: II
EXP: C Kzt: NA
Mean Height: 15.00 ft
TCDL: 5.0 psf
BCDL: 5.0 psf
MWFRS Parallel Dist: 0 to h/2
C&C Dist a: 3.20 ft
Loc. from endwall: not in 9.00 ft
GCpi: 0.18
Wind Duration: 1.60

Snow Criteria (Pg,Pf in PSF)
Pg: NA Ct: NA CAT: NA
Pf: NA Ce: NA
Lu: NA Cs: NA
Snow Duration: NA

Building Code:
FBC 7th Ed. 2020 Res.
TPI Std: 2014
Rep Fac: Varies by Ld Case
FT/RT:20(0)/10(0)
Plate Type(s):
WAVE

Defl/CSI Criteria

PP Deflection in	loc	L/defl	L/#
VERT(LL): 0.048	B	999	240
VERT(CL): 0.099	B	999	180
HORZ(LL): 0.015	A	-	-
HORZ(TL): 0.031	A	-	-

Creep Factor: 2.0
Max TC CSI: 0.900
Max BC CSI: 0.643
Max Web CSI: 0.951

VIEW Ver: 21.02.01.1214.12

▲ Maximum Reactions (lbs)

Loc	Gravity R+	Gravity / R-	Gravity / Rh	Non-Gravity / Rw	Non-Gravity / U	Non-Gravity / RL
A	1050	/-	/-	/-	/106	/-
K	4916	/-	/-	/-	/537	/-
H	344	/-91	/-	/-	/97	/-

Wind reactions based on MWFRS
A Brg Wid = 3.9 Min Req = 1.5 (Truss)
K Brg Wid = 4.0 Min Req = -
H Brg Wid = 4.0 Min Req = 1.5 (Truss)
Bearings A, K, & H are a rigid surface.
Members not listed have forces less than 375#

Maximum Top Chord Forces Per Ply (lbs)

Chords	Tens.	Comp.	Chords	Tens.	Comp.
A - B	162	-1664	E - F	1055	-127
B - C	143	-1620	F - G	655	-136
C - D	114	-1543	G - H	575	-213
D - E	915	-101			

Maximum Bot Chord Forces Per Ply (lbs)

Chords	Tens.	Comp.	Chords	Tens.	Comp.
A - M	1337	-101	K - J	22	-619
M - L	753	-60	J - H	167	-466
L - K	778	-59			

Maximum Web Forces Per Ply (lbs)

Webs	Tens.	Comp.	Webs	Tens.	Comp.
B - M	157	-428	E - K	178	-1166
M - D	1157	-112	K - F	113	-543
D - L	2496	-114	F - J	460	0
D - K	225	-2913			

Lumber

Top chord: 2x4 SP #2;
Bot chord: 2x6 SP #2; B2 2x6 SP 2400f-2.0E;
Webs: 2x4 SP #3;

Bracing

(a) Continuous lateral restraint equally spaced on member.

Special Loads

——(Lumber Dur.Fac.=1.25 / Plate Dur.Fac.=1.25)

TC: From	63 plf at	0.00 to	63 plf at	33.66
BC: From	20 plf at	0.00 to	20 plf at	11.06
BC: From	10 plf at	11.06 to	10 plf at	16.83
BC: From	20 plf at	16.83 to	20 plf at	32.00
BC: From	5 plf at	32.00 to	5 plf at	33.66

BC: 1149 lb Conc. Load at 11.06,13.06
BC: 1144 lb Conc. Load at 14.93

Wind

Wind loads and reactions based on MWFRS.

Wind loading based on both gable and hip roof types.

Bearing Block(s)

Brg blocks:0.131"x3", min. nails

brg	x-loc	#blocks	length/blk	#nails/blk	wall plate
2	16.664'	1	12"	7	Rigid Surface

Brg block to be same size and species as chord.
Refer to drawing CNNAILSP1014 for more information.

Additional Notes

The overall height of this truss excluding overhang is 9-8-5.

WILLIAM H. KRICK
LICENSE
No. 70861
STATE OF FLORIDA
PROFESSIONAL ENGINEER

COA #0278

05/11/2022

Florida Certificate of Product Approval #FL 1999

****WARNING**** READ AND FOLLOW ALL NOTES ON THIS DRAWING!
****IMPORTANT**** FURNISH THIS DRAWING TO ALL CONTRACTORS INCLUDING THE INSTALLERS

Trusses require extreme care in fabricating, handling, shipping, installing and bracing. Refer to and follow the latest edition of BCSI (Building Component Safety Information, by TPI and SBCA) for safety practices prior to performing these functions. Installers shall provide temporary bracing per BCSI. Unless noted otherwise, top chord shall have properly attached structural sheathing and bottom chord shall have a properly attached rigid ceiling. Locations shown for permanent lateral restraint of webs shall have bracing installed per BCSI sections B3, B7, or B10, as applicable. Apply plates to each face of truss and position as shown above and on the Joint Details, unless noted otherwise. Refer to drawings 160A-Z for standard plate positions. Refer to job's General Notes page for additional information.

Alpine, a division of ITW Building Components Group Inc. shall not be responsible for any deviation from this drawing, any failure to build the truss in conformance with ANSI/TPI 1, or for handling, shipping, installation and bracing of trusses. A seal on this drawing or cover page listing this drawing, indicates acceptance of professional engineering responsibility solely for the design shown. The suitability and use of this drawing for any structure is the responsibility of the Building Designer per ANSI/TPI 1 Sec.2.

For more information see these web sites: Alpine: alpineitw.com; TPI: tpinst.org; SBCA: sbcacomponents.com; ICC: iccsafe.org; AWC: awc.org

ALPINE
AN ITW COMPANY
155 Harlem Ave
North Building, 4th Floor
Glenview, IL 60025

SEQN: 656896 COMN	Ply: 1	Job Number: 22-7559	Cust: R 215 JRef: 1Xff2150006 T14
FROM: CDM	Qty: 7	Judy Baughn	DrwNo: 131.22.0815.58500
		Truss Label: B02	KD / WHK 05/11/2022

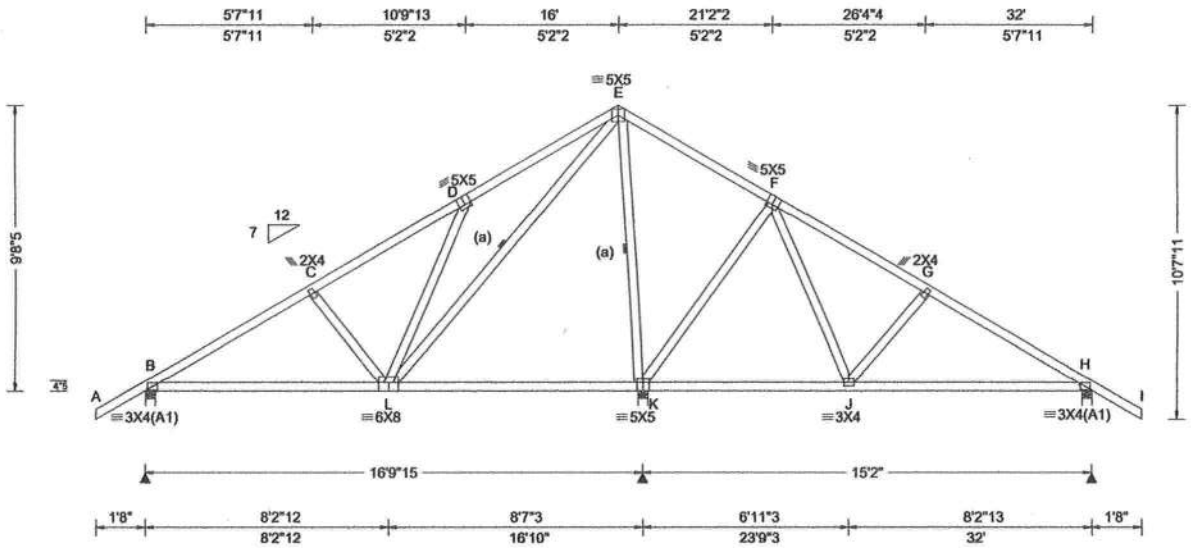

Loading Criteria (psf)
TCLL: 20.00
TCDL: 10.00
BCLL: 0.00
BCDL: 10.00
Des Ld: 40.00
NCBCLL: 10.00
Soffit: 2.00
Load Duration: 1.25
Spacing: 24.0 "

Wind Criteria
Wind Std: ASCE 7-16
Speed: 130 mph
Enclosure: Closed
Risk Category: II
EXP: C Kzt: NA
Mean Height: 15.00 ft
TCDL: 5.0 psf
BCDL: 5.0 psf
MWFRS Parallel Dist: > 2h
C&C Dist a: 3.20 ft
Loc. from endwall: not in 9.00 ft
GCpi: 0.18
Wind Duration: 1.60

Snow Criteria (Pg,Pf in PSF)
Pg: NA Ct: NA CAT: NA
Pf: NA Ce: NA
Lu: NA Cs: NA
Snow Duration: NA

Building Code:
FBC 7th Ed. 2020 Res.
TPI Std: 2014
Rep Fac: Yes
FT/RT:20(0)/10(0)
Plate Type(s):
WAVE

Defl/CSI Criteria

PP Deflection in	loc	L/defl	L/#
VERT(LL): 0.045	D	999	240
VERT(CL): 0.085	D	999	180
HORZ(LL): 0.021	D	-	-
HORZ(TL): 0.039	D	-	-

Creep Factor: 2.0
Max TC CSI: 0.422
Max BC CSI: 0.639
Max Web CSI: 0.744

VIEW Ver: 21.02.01.1214.12

▲ Maximum Reactions (lbs)

Loc	Gravity R+	Gravity /R-	Gravity /Rh	Non-Gravity /Rw	Non-Gravity /U	Non-Gravity /RL
B	694	/-	/-	/424	/17	/292
K	1977	/-	/-	/927	/-	/-
H	605	/-	/-	/426	/53	/-

Wind reactions based on MWFRS
B Brg Wid = 3.9 Min Req = 1.5 (Truss)
K Brg Wid = 4.0 Min Req = 2.3
H Brg Wid = 4.0 Min Req = 1.5 (Truss)
Bearings B, K, & H are a rigid surface.
Members not listed have forces less than 375#

Maximum Top Chord Forces Per Ply (lbs)

Chords	Tens.	Comp.	Chords	Tens.	Comp.
B - C	133	-776	E - F	488	0
C - D	137	-565	G - H	97	-558
D - E	405	-792			

Maximum Bot Chord Forces Per Ply (lbs)

Chords	Tens.	Comp.	Chords	Tens.	Comp.
B - L	608	-208	J - H	417	-8

Maximum Web Forces Per Ply (lbs)

Webs	Tens.	Comp.	Webs	Tens.	Comp.
L - D	305	-498	K - F	227	-602
L - E	1233	-425	F - J	460	-58
E - K	208	-1132			

Lumber
Top chord: 2x4 SP #2;
Bot chord: 2x4 SP #2;
Webs: 2x4 SP #3;

Bracing
(a) Continuous lateral restraint equally spaced on member.

Loading
Truss passed check for 20 psf additional bottom chord live load in areas with 42"-high x 24"-wide clearance.

Wind
Wind loads based on MWFRS with additional C&C member design.
Wind loading based on both gable and hip roof types.

Additional Notes
The overall height of this truss excluding overhang is 9-8-5.

THIS TRUSS MUST BE INSTALLED AS SHOWN AND NOT END FOR END.

WILLIAM H. KRICK
LICENSE
No. 70861
STATE OF FLORIDA
PROFESSIONAL ENGINEER

COA #0278
05/11/2022
Florida Certificate of Product Approval #FL 1999

WARNING READ AND FOLLOW ALL NOTES ON THIS DRAWING!
IMPORTANT FURNISH THIS DRAWING TO ALL CONTRACTORS INCLUDING THE INSTALLERS

Trusses require extreme care in fabricating, handling, shipping, installing and bracing. Refer to and follow the latest edition of BCSI (Building Component Safety Information, by TPI and SBCA) for safety practices prior to performing these functions. Installers shall provide temporary bracing per BCSI. Unless noted otherwise, top chord shall have properly attached structural sheathing and bottom chord shall have a properly attached rigid ceiling. Locations shown for permanent lateral restraint of webs shall have bracing installed per BCSI sections B3, B7, or B10, as applicable. Apply plates to each face of truss and position as shown above and on the Joint Details, unless noted otherwise. Refer to drawings 160A-Z for standard plate positions. Refer to job's General Notes page for additional information.

Alpine, a division of ITW Building Components Group Inc. shall not be responsible for any deviation from this drawing, any failure to build the truss in conformance with ANSI/TPI 1, or for handling, shipping, installation and bracing of trusses. A seal on this drawing or cover page listing this drawing, indicates acceptance of professional engineering responsibility solely for the design shown. The suitability and use of this drawing for any structure is the responsibility of the Building Designer per ANSI/TPI 1 Sec.2.
For more information see these web sites: Alpine: alpineitw.com; TPI: tpinst.org; SBCA: sbcacomponents.com; ICC: iccsafe.org; AWC: awc.org

ALPINE
AN ITW COMPANY
155 Harlem Ave
North Building, 4th Floor
Glenview, IL 60025

SEQN: 656941 COMN	Ply: 1	Job Number: 22-7559	Cust: R 215 JRef: 1Xff2150006 T16
FROM: CDM	Qty: 3	Judy Baughn	DrwNo: 131.22.0815.46707
		Truss Label: B03	KD / WHK 05/11/2022

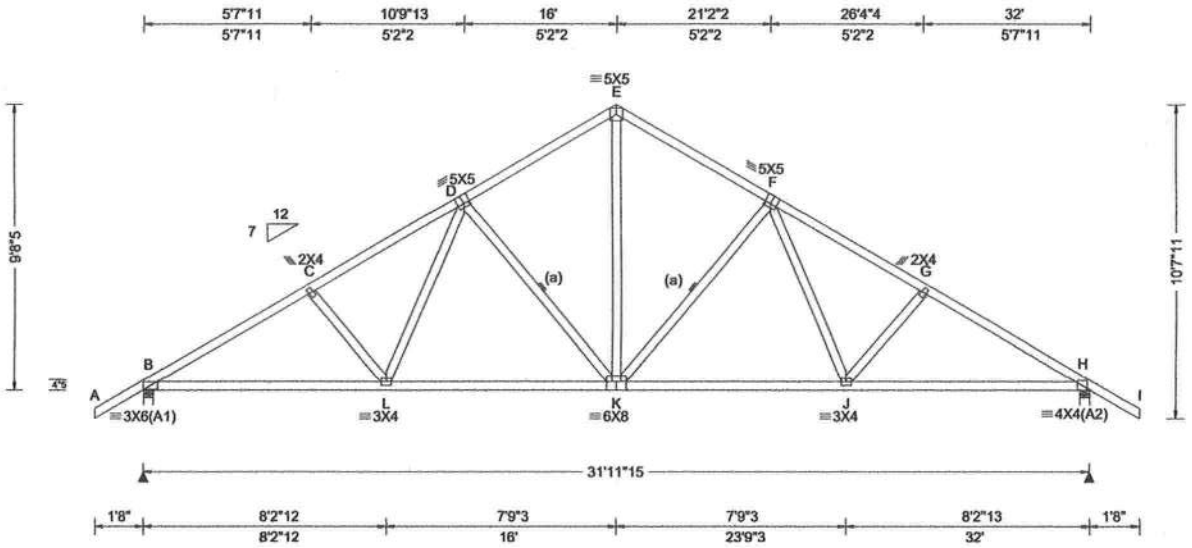

Loading Criteria (psf)

TCLL:	20.00
TCDL:	10.00
BCLL:	0.00
BCDL:	10.00
Des Ld:	40.00
NCBCLL:	10.00
Soffit:	2.00

Load Duration: 1.25
Spacing: 24.0 "

Wind Criteria
Wind Std: ASCE 7-16
Speed: 130 mph
Enclosure: Closed
Risk Category: II
EXP: C Kzt: NA
Mean Height: 15.00 ft
TCDL: 5.0 psf
BCDL: 5.0 psf
MWFRS Parallel Dist: > 2h
C&C Dist a: 3.20 ft
Loc. from endwall: not in 9.00 ft
GCpi: 0.18
Wind Duration: 1.60

Snow Criteria (Pg,Pf in PSF)
Pg: NA Ct: NA CAT: NA
Pf: NA Ce: NA
Lu: NA Cs: NA
Snow Duration: NA

Building Code:
FBC 7th Ed. 2020 Res.
TPI Std: 2014
Rep Fac: Yes
FT/RT:20(0)/10(0)
Plate Type(s):
WAVE

Defl/CSI Criteria

PP Deflection in	loc	L/defl	L/#
VERT(LL): 0.095	K	999	240
VERT(CL): 0.195	K	999	180
HORZ(LL): 0.042	H	-	-
HORZ(TL): 0.086	H	-	-

Creep Factor: 2.0
Max TC CSI: 0.361
Max BC CSI: 0.758
Max Web CSI: 0.407

VIEW Ver: 21.02.01.1214.12

▲ Maximum Reactions (lbs)

	Gravity			Non-Gravity		
Loc	R+	/ R-	/ Rh	/ Rw	/ U	/ RL
B	1437	/-	/-	/861	/10	/292
H	1450	/-	/-	/867	/10	/-

Wind reactions based on MWFRS
B Brg Wid = 3.9 Min Req = 1.7 (Truss)
H Brg Wid = 4.0 Min Req = 1.7 (Truss)
Bearings B & H are a rigid surface.
Members not listed have forces less than 375#

Maximum Top Chord Forces Per Ply (lbs)

Chords	Tens.	Comp.	Chords	Tens.	Comp.
B - C	425	-2209	E - F	383	-1401
C - D	430	-1998	F - G	423	-1963
D - E	383	-1401	G - H	418	-2169

Maximum Bot Chord Forces Per Ply (lbs)

Chords	Tens.	Comp.	Chords	Tens.	Comp.
B - L	1844	-249	K - J	1482	-127
L - K	1493	-127	J - H	1798	-249

Maximum Web Forces Per Ply (lbs)

Webs	Tens.	Comp.	Webs	Tens.	Comp.
L - D	470	-55	K - F	204	-537
D - K	208	-556	F - J	440	-47
E - K	996	-241			

Lumber

Top chord: 2x4 SP #2;
Bot chord: 2x4 SP #2;
Webs: 2x4 SP #3;

Bracing

(a) Continuous lateral restraint equally spaced on member.

Wind

Wind loads based on MWFRS with additional C&C member design.

Wind loading based on both gable and hip roof types.

Additional Notes

The overall height of this truss excluding overhang is 9-8-5.

WILLIAM H. KRICK
LICENSE
No. 70861
STATE OF FLORIDA
PROFESSIONAL ENGINEER

COA #0278
Florida Certificate of Product Approval #FL 1999
05/11/2022

****WARNING**** READ AND FOLLOW ALL NOTES ON THIS DRAWING!
****IMPORTANT**** FURNISH THIS DRAWING TO ALL CONTRACTORS INCLUDING THE INSTALLERS

Trusses require extreme care in fabricating, handling, shipping, installing and bracing. Refer to and follow the latest edition of BCSI (Building Component Safety Information, by TPI and SBCA) for safety practices prior to performing these functions. Installers shall provide temporary bracing per BCSI. Unless noted otherwise, top chord shall have properly attached structural sheathing and bottom chord shall have a properly attached rigid ceiling. Locations shown for permanent lateral restraint of webs shall have bracing installed per BCSI sections B3, B7, or B10, as applicable. Apply plates to each face of truss and position as shown above and on the Joint Details, unless noted otherwise. Refer to drawings 160A-Z for standard plate positions. Refer to job's General Notes page for additional information.

Alpine, a division of ITW Building Components Group Inc. shall not be responsible for any deviation from this drawing, any failure to build the truss in conformance with ANSI/TPI 1, or for handling, shipping, installation and bracing of trusses. A seal on this drawing or cover page listing this drawing, indicates acceptance of professional engineering responsibility solely for the design shown. The suitability and use of this drawing for any structure is the responsibility of the Building Designer per ANSI/TPI 1 Sec.2.

For more information see these web sites: Alpine: alpineitw.com; TPI: tpinst.org; SBCA: sbcacomponents.com; ICC: iccsafe.org; AWC: awc.org

ALPINE AN ITW COMPANY
155 Harlem Ave
North Building, 4th Floor
Glenview, IL 60025

SEQN: 656943 COMN	Ply: 1	Job Number: 22-7559	Cust: R 215 JRef: 1Xff2150006 T17
FROM: CDM	Qty: 5	Judy Baughn	DrwNo: 131.22.0815.44870
		Truss Label: B04	KD / WHK 05/11/2022

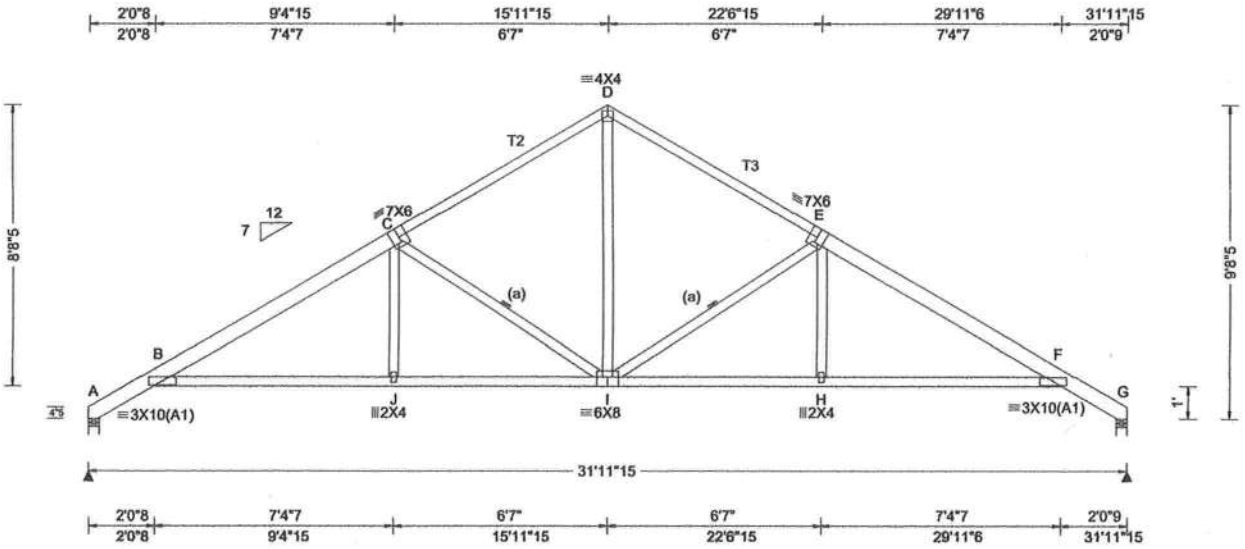

Loading Criteria (psf)

TCLL:	20.00
TCDL:	10.00
BCLL:	0.00
BCDL:	10.00
Des Ld:	40.00
NCBCLL:	10.00
Soffit:	2.00

Load Duration: 1.25
Spacing: 24.0 "

Wind Criteria
Wind Std: ASCE 7-16
Speed: 130 mph
Enclosure: Closed
Risk Category: II
EXP: C Kzt: NA
Mean Height: 15.00 ft
TCDL: 5.0 psf
BCDL: 5.0 psf
MWFRS Parallel Dist: > 2h
C&C Dist a: 3.20 ft
Loc. from endwall: not in 9.00 ft
GCpi: 0.18
Wind Duration: 1.60

Snow Criteria (Pg,Pf in PSF)
Pg: NA Ct: NA CAT: NA
Pf: NA Ce: NA
Lu: NA Cs: NA
Snow Duration: NA

Building Code:
FBC 7th Ed. 2020 Res.
TPI Std: 2014
Rep Fac: Yes
FT/RT:20(0)/10(0)
Plate Type(s):
WAVE

Defl/CSI Criteria

PP Deflection in	loc	L/defl	L/#
VERT(LL): 0.437	I	862	240
VERT(CL): 0.880	I	428	180
HORZ(LL): 0.252	F	-	-
HORZ(TL): 0.508	F	-	-

Creep Factor: 2.0
Max TC CSI: 0.802
Max BC CSI: 0.830
Max Web CSI: 0.435

VIEW Ver: 21.02.01.1214.12

▲ Maximum Reactions (lbs)

	Gravity			Non-Gravity		
Loc	R+	/ R-	/ Rh	/ Rw	/ U	/ RL
A	1289	/-	/-	/729	/19	/242
G	1290	/-	/-	/730	/19	/-

Wind reactions based on MWFRS
A Brg Wid = 3.9 Min Req = 1.5 (Truss)
G Brg Wid = 4.0 Min Req = 1.5 (Truss)
Bearings A & G are a rigid surface.
Members not listed have forces less than 375#

Maximum Top Chord Forces Per Ply (lbs)

Chords	Tens.	Comp.	Chords	Tens.	Comp.
A - B	144	-640	D - E	391	-1568
B - C	411	-2227	E - F	411	-2227
C - D	391	-1568	F - G	144	-640

Maximum Bot Chord Forces Per Ply (lbs)

Chords	Tens.	Comp.	Chords	Tens.	Comp.
B - J	1975	-249	I - H	1971	-250
J - I	1971	-250	H - F	1975	-249

Maximum Web Forces Per Ply (lbs)

Webs	Tens.	Comp.	Webs	Tens.	Comp.
C - I	251	-890	I - E	251	-890
D - I	1142	-231			

Lumber

Top chord: 2x6 SP 2400f-2.0E; T2,T3 2x4 SP #2;
Bot chord: 2x4 SP #2;
Webs: 2x4 SP #3;

Bracing

(a) Continuous lateral restraint equally spaced on member.

Wind

Wind loads based on MWFRS with additional C&C member design.

Wind loading based on both gable and hip roof types.

Additional Notes

The overall height of this truss excluding overhang is 9-8-5.

WILLIAM H. KRICK
LICENSE
No. 70861
STATE OF FLORIDA
PROFESSIONAL ENGINEER

COA #0278

05/11/2022

Florida Certificate of Product Approval #FL 1999

****WARNING**** READ AND FOLLOW ALL NOTES ON THIS DRAWING!
****IMPORTANT**** FURNISH THIS DRAWING TO ALL CONTRACTORS INCLUDING THE INSTALLERS

Trusses require extreme care in fabricating, handling, shipping, installing and bracing. Refer to and follow the latest edition of BCSI (Building Component Safety Information, by TPI and SBCA) for safety practices prior to performing these functions. Installers shall provide temporary bracing per BCSI. Unless noted otherwise, top chord shall have properly attached structural sheathing and bottom chord shall have a properly attached rigid ceiling. Locations shown for permanent lateral restraint of webs shall have bracing installed per BCSI sections B3, B7, or B10, as applicable. Apply plates to each face of truss and position as shown above and on the Joint Details, unless noted otherwise. Refer to drawings 160A-Z for standard plate positions. Refer to job's General Notes page for additional information.

Alpine, a division of ITW Building Components Group Inc. shall not be responsible for any deviation from this drawing, any failure to build the truss in conformance with ANSI/TPI 1, or for handling, shipping, installation and bracing of trusses. A seal on this drawing or cover page listing this drawing, indicates acceptance of professional engineering responsibility solely for the design shown. The suitability and use of this drawing for any structure is the responsibility of the Building Designer per ANSI/TPI 1 Sec.2.

For more information see these web sites: Alpine: alpineitw.com; TPI: tpinst.org; SBCA: sbcacomponents.com; ICC: iccsafe.org; AWC: awc.org

ALPINE
AN ITW COMPANY
155 Harlem Ave
North Building, 4th Floor
Glenview, IL 60025

SEQN: 656939 COMN	Ply: 1	**Job Number:** 22-7559	Cust: R 215 JRef: 1Xff2150006 T1
FROM: CDM	Qty: 1	Judy Baughn	DrwNo: 131.22.0815.16527
		Truss Label: B05	KD / WHK 05/11/2022

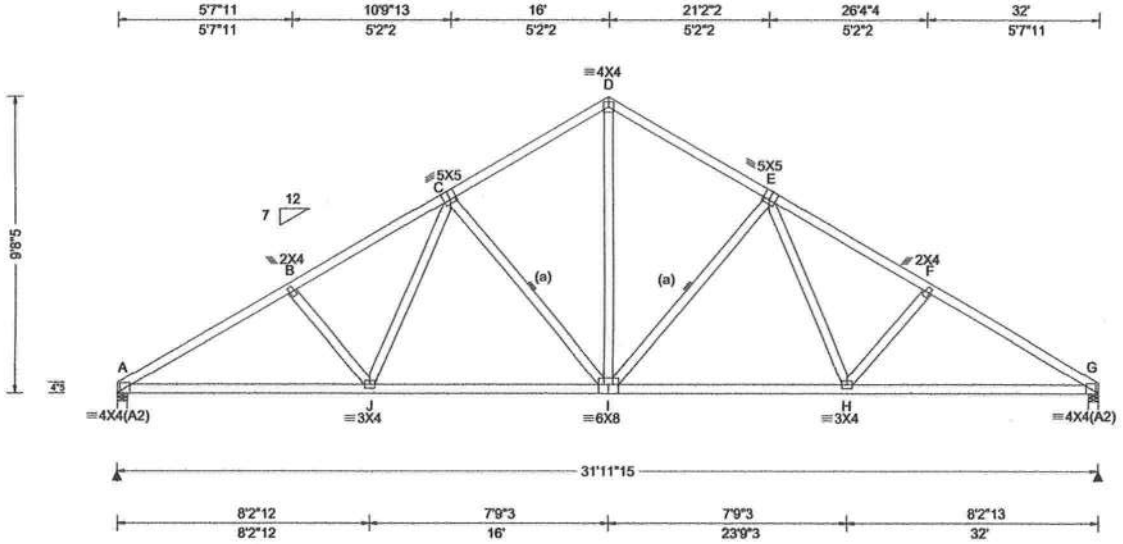

Loading Criteria (psf)
TCLL: 20.00
TCDL: 10.00
BCLL: 0.00
BCDL: 10.00
Des Ld: 40.00
NCBCLL: 10.00
Soffit: 2.00
Load Duration: 1.25
Spacing: 24.0 "

Wind Criteria
Wind Std: ASCE 7-16
Speed: 130 mph
Enclosure: Closed
Risk Category: II
EXP: C Kzt: NA
Mean Height: 15.00 ft
TCDL: 5.0 psf
BCDL: 5.0 psf
MWFRS Parallel Dist: h to 2h
C&C Dist a: 3.20 ft
Loc. from endwall: not in 9.00 ft
GCpi: 0.18
Wind Duration: 1.60

Snow Criteria (Pg,Pf in PSF)
Pg: NA Ct: NA CAT: NA
Pf: NA Ce: NA
Lu: NA Cs: NA
Snow Duration: NA

Building Code:
FBC 7th Ed. 2020 Res.
TPI Std: 2014
Rep Fac: Yes
FT/RT:20(0)/10(0)
Plate Type(s):
WAVE

Defl/CSI Criteria

PP Deflection in	loc	L/defl	L/#
VERT(LL): 0.093	I	999	240
VERT(CL): 0.194	I	999	180
HORZ(LL): 0.042	G	-	-
HORZ(TL): 0.087	G	-	-

Creep Factor: 2.0
Max TC CSI: 0.411
Max BC CSI: 0.772
Max Web CSI: 0.418

VIEW Ver: 21.02.01.1214.12

▲ Maximum Reactions (lbs)

Loc	Gravity R+	/ R-	/ Rh	Non-Gravity / Rw	/ U	/ RL
A	1324	/-	/-	/765	/16	/242
G	1336	/-	/-	/772	/16	/-

Wind reactions based on MWFRS
A Brg Wid = 3.9 Min Req = 1.6 (Truss)
G Brg Wid = 4.0 Min Req = 1.6 (Truss)
Bearings A & G are a rigid surface.
Members not listed have forces less than 375#

Maximum Top Chord Forces Per Ply (lbs)

Chords	Tens.	Comp.	Chords	Tens.	Comp.
A - B	443	-2240	D - E	391	-1413
B - C	446	-2027	E - F	440	-1995
C - D	390	-1412	F - G	436	-2203

Maximum Bot Chord Forces Per Ply (lbs)

Chords	Tens.	Comp.	Chords	Tens.	Comp.
A - J	1877	-310	I - H	1498	-172
J - I	1509	-174	H - G	1835	-303

Maximum Web Forces Per Ply (lbs)

Webs	Tens.	Comp.	Webs	Tens.	Comp.
J - C	479	-65	I - E	209	-547
C - I	212	-564	E - H	449	-58
D - I	1006	-247			

Lumber
Top chord: 2x4 SP #2;
Bot chord: 2x4 SP #2;
Webs: 2x4 SP #3;

Bracing
(a) Continuous lateral restraint equally spaced on member.

Wind
Wind loads based on MWFRS with additional C&C member design.
Wind loading based on both gable and hip roof types.

Additional Notes
The overall height of this truss excluding overhang is 9-8-5.

WILLIAM H. KRICK
LICENSE
No. 70861
STATE OF FLORIDA
PROFESSIONAL ENGINEER

COA #0278
05/11/2022
Florida Certificate of Product Approval #FL 1999

****WARNING**** READ AND FOLLOW ALL NOTES ON THIS DRAWING!
****IMPORTANT**** FURNISH THIS DRAWING TO ALL CONTRACTORS INCLUDING THE INSTALLERS

Trusses require extreme care in fabricating, handling, shipping, installing and bracing. Refer to and follow the latest edition of BCSI (Building Component Safety Information, by TPI and SBCA) for safety practices prior to performing these functions. Installers shall provide temporary bracing per BCSI. Unless noted otherwise, top chord shall have properly attached structural sheathing and bottom chord shall have a properly attached rigid ceiling. Locations shown for permanent lateral restraint of webs shall have bracing installed per BCSI sections B3, B7, or B10, as applicable. Apply plates to each face of truss and position as shown above and on the Joint Details, unless noted otherwise. Refer to drawings 160A-Z for standard plate positions. Refer to job's General Notes page for additional information.

Alpine, a division of ITW Building Components Group Inc. shall not be responsible for any deviation from this drawing, any failure to build the truss in conformance with ANSI/TPI 1, or for handling, shipping, installation and bracing of trusses. A seal on this drawing or cover page listing this drawing, indicates acceptance of professional engineering responsibility solely for the design shown. The suitability and use of this drawing for any structure is the responsibility of the Building Designer per ANSI/TPI 1 Sec.2.

For more information see these web sites: Alpine: alpineitw.com; TPI: tpinst.org; SBCA: sbcacomponents.com; ICC: iccsafe.org; AWC: awc.org

ALPINE
AN ITW COMPANY
155 Harlem Ave
North Building, 4th Floor
Glenview, IL 60025

SEQN: 656886 HIPS	Ply: 1	Job Number: 22-7559	Cust: R 215 JRef: 1Xff2150006 T23
FROM: CDM	Qty: 1	Judy Baughn	DrwNo: 131.22.0815.14730
		Truss Label: C01	KD / WHK 05/11/2022

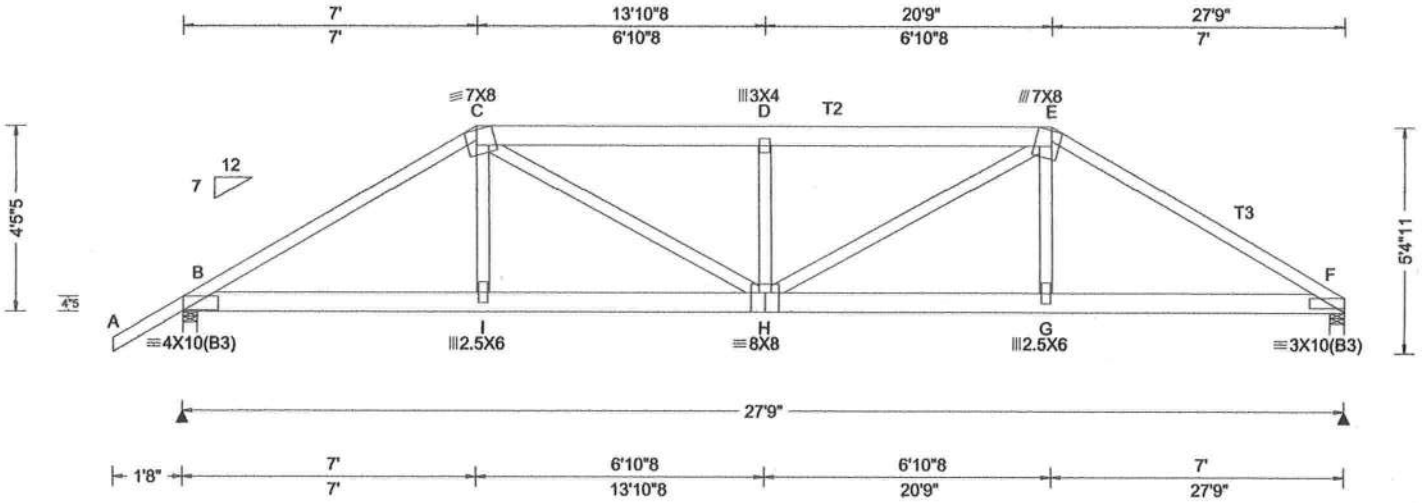

Loading Criteria (psf)

TCLL:	20.00
TCDL:	10.00
BCLL:	0.00
BCDL:	10.00
Des Ld:	40.00
NCBCLL:	10.00
Soffit:	2.00

Load Duration: 1.25
Spacing: 24.0 "

Wind Criteria
Wind Std: ASCE 7-16
Speed: 130 mph
Enclosure: Closed
Risk Category: II
EXP: C Kzt: NA
Mean Height: 15.00 ft
TCDL: 5.0 psf
BCDL: 5.0 psf
MWFRS Parallel Dist: 0 to h/2
C&C Dist a: 3.00 ft
Loc. from endwall: not in 4.50 ft
GCpi: 0.18
Wind Duration: 1.60

Snow Criteria (Pg,Pf in PSF)
Pg: NA Ct: NA CAT: NA
Pf: NA Ce: NA
Lu: NA Cs: NA
Snow Duration: NA

Building Code:
FBC 7th Ed. 2020 Res.
TPI Std: 2014
Rep Fac: Varies by Ld Case
FT/RT:20(0)/10(0)
Plate Type(s):
WAVE

Defl/CSI Criteria

PP Deflection in	loc	L/defl	L/#
VERT(LL): 0.164	D	999	240
VERT(CL): 0.332	D	993	180
HORZ(LL): 0.049	F	-	-
HORZ(TL): 0.100	F	-	-

Creep Factor: 2.0
Max TC CSI: 0.919
Max BC CSI: 0.899
Max Web CSI: 0.531

VIEW Ver: 21.02.01.1214.12

▲ Maximum Reactions (lbs)

Loc	Gravity R+	Gravity / R-	Gravity / Rh	Non-Gravity / Rw	Non-Gravity / U	Non-Gravity / RL
B	2488	/-	/-	/-	/673	/-
F	2242	/-	/-	/-	/651	/-

Wind reactions based on MWFRS
B Brg Wid = 4.0 Min Req = 2.9 (Truss)
F Brg Wid = 4.0 Min Req = 2.6 (Truss)
Bearings B & F are a rigid surface.
Members not listed have forces less than 375#

Maximum Top Chord Forces Per Ply (lbs)

Chords	Tens.	Comp.	Chords	Tens.	Comp.
B - C	1180	-4254	D - E	1399	-4609
C - D	1399	-4610	E - F	1248	-3999

Maximum Bot Chord Forces Per Ply (lbs)

Chords	Tens.	Comp.	Chords	Tens.	Comp.
B - I	3602	-992	H - G	3403	-1053
I - H	3628	-991	G - F	3378	-1049

Maximum Web Forces Per Ply (lbs)

Webs	Tens.	Comp.	Webs	Tens.	Comp.
C - I	725	0	H - E	1395	-400
C - H	1134	-471	G - E	682	-103
D - H	468	-799			

Lumber

Top chord: 2x4 SP #2; T2 2x6 SP #2;
T3 2x4 SP M-31;
Bot chord: 2x6 SP #2;
Webs: 2x4 SP #3;

Special Loads

-----(Lumber Dur.Fac.=1.25 / Plate Dur.Fac.=1.25)

TC: From	63 plf at	-1.67 to	63 plf at	7.00
TC: From	32 plf at	7.00 to	32 plf at	20.75
TC: From	63 plf at	20.75 to	63 plf at	27.75
BC: From	5 plf at	-1.67 to	5 plf at	0.00
BC: From	20 plf at	0.00 to	20 plf at	7.03
BC: From	10 plf at	7.03 to	10 plf at	20.72
BC: From	20 plf at	20.72 to	20 plf at	27.75

TC: 268 lb Conc. Load at 7.03
TC: 188 lb Conc. Load at 9.06,11.06,13.06,14.69
TC: 5 lb Conc. Load at 16.69,18.69
TC: 270 lb Conc. Load at 20.72
BC: 456 lb Conc. Load at 7.03
BC: 129 lb Conc. Load at 9.06,11.06,13.06,14.69
BC: 64 lb Conc. Load at 16.69,18.69
BC: 479 lb Conc. Load at 20.72

Purlins

In lieu of structural panels use purlins to brace all flat TC @ 24" oc.

Wind

Wind loads and reactions based on MWFRS.
Wind loading based on both gable and hip roof types.

Additional Notes

The overall height of this truss excluding overhang is 4-5-5.

WILLIAM H. KRICK
LICENSE
No. 70861
STATE OF FLORIDA
PROFESSIONAL ENGINEER

COA #0278
06/11/2022
Florida Certificate of Product Approval #FL 1999

****WARNING**** READ AND FOLLOW ALL NOTES ON THIS DRAWING!
****IMPORTANT**** FURNISH THIS DRAWING TO ALL CONTRACTORS INCLUDING THE INSTALLERS

Trusses require extreme care in fabricating, handling, shipping, installing and bracing. Refer to and follow the latest edition of BCSI (Building Component Safety Information, by TPI and SBCA) for safety practices prior to performing these functions. Installers shall provide temporary bracing per BCSI. Unless noted otherwise, top chord shall have properly attached structural sheathing and bottom chord shall have a properly attached rigid ceiling. Locations shown for permanent lateral restraint of webs shall have bracing installed per BCSI sections B3, B7, or B10, as applicable. Apply plates to each face of truss and position as shown above and on the Joint Details, unless noted otherwise. Refer to drawings 160A-Z for standard plate positions. Refer to job's General Notes page for additional information.

Alpine, a division of ITW Building Components Group Inc. shall not be responsible for any deviation from this drawing, any failure to build the truss in conformance with ANSI/TPI 1, or for handling, shipping, installation and bracing of trusses. A seal on this drawing or cover page listing this drawing, indicates acceptance of professional engineering responsibility solely for the design shown. The suitability and use of this drawing for any structure is the responsibility of the Building Designer per ANSI/TPI 1 Sec.2.

For more information see these web sites: Alpine: alpineitw.com; TPI: tpinst.org; SBCA: sbcacomponents.com; ICC: iccsafe.org; AWC: awc.org

ALPINE
AN ITW COMPANY
155 Harlem Ave
North Building, 4th Floor
Glenview, IL 60025

SEQN: 656870 HIPS FROM: CDM	Ply: 1 Qty: 1	**Job Number:** 22-7559 Judy Baughn **Truss Label:** C02	Cust: R 215 JRef: 1Xff2150006 T19 DrwNo: 131.22.0814.57893 KD / WHK 05/11/2022

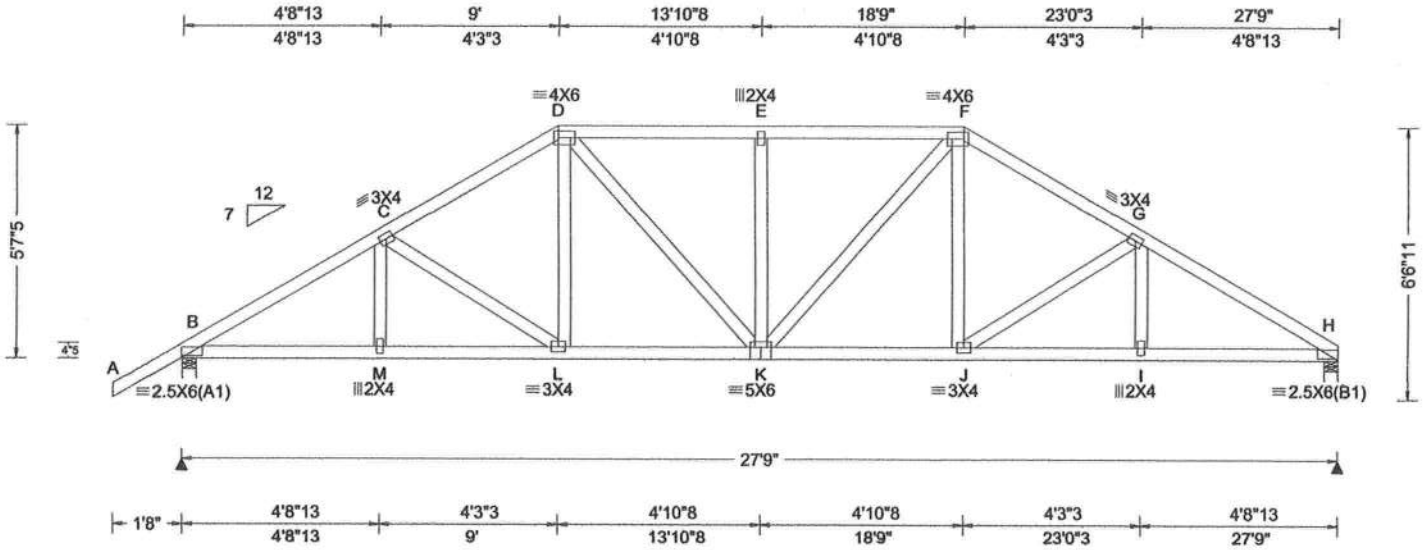

Loading Criteria (psf)	**Wind Criteria**	**Snow Criteria** (Pg,Pf in PSF)	**Defl/CSI Criteria**
TCLL: 20.00 TCDL: 10.00 BCLL: 0.00 BCDL: 10.00 Des Ld: 40.00 NCBCLL: 10.00 Soffit: 2.00 Load Duration: 1.25 Spacing: 24.0 "	Wind Std: ASCE 7-16 Speed: 130 mph Enclosure: Closed Risk Category: II EXP: C Kzt: NA Mean Height: 15.00 ft TCDL: 5.0 psf BCDL: 5.0 psf MWFRS Parallel Dist: h/2 to h C&C Dist a: 3.00 ft Loc. from endwall: not in 9.00 ft GCpi: 0.18 Wind Duration: 1.60	Pg: NA Ct: NA CAT: NA Pf: NA Ce: NA Lu: NA Cs: NA Snow Duration: NA Building Code: FBC 7th Ed. 2020 Res. TPI Std: 2014 Rep Fac: Yes FT/RT:20(0)/10(0) Plate Type(s): WAVE	PP Deflection in loc L/defl L/# VERT(LL): 0.073 E 999 240 VERT(CL): 0.150 E 999 180 HORZ(LL): 0.032 H - - HORZ(TL): 0.065 H - - Creep Factor: 2.0 Max TC CSI: 0.330 Max BC CSI: 0.548 Max Web CSI: 0.198 VIEW Ver: 21.02.01.1214.12

▲ Maximum Reactions (lbs)

	Gravity			Non-Gravity		
Loc	R+	/ R-	/ Rh	/ Rw	/ U	/ RL
B	1271	/-	/-	/753	/227	/166
H	1150	/-	/-	/657	/196	/-

Wind reactions based on MWFRS
B Brg Wid = 4.0 Min Req = 1.5 (Truss)
H Brg Wid = 4.0 Min Req = 1.5 (Truss)
Bearings B & H are a rigid surface.
Members not listed have forces less than 375#

Maximum Top Chord Forces Per Ply (lbs)

Chords	Tens.	Comp.	Chords	Tens.	Comp.
B - C	659	-1860	E - F	746	-1494
C - D	676	-1572	F - G	683	-1582
D - E	746	-1494	G - H	677	-1893

Maximum Bot Chord Forces Per Ply (lbs)

Chords	Tens.	Comp.	Chords	Tens.	Comp.
B - M	1536	-500	K - J	1309	-435
M - L	1535	-501	J - I	1571	-520
L - K	1302	-434	I - H	1572	-519

Lumber

Top chord: 2x4 SP #2;
Bot chord: 2x4 SP #2;
Webs: 2x4 SP #3;

Purlins

In lieu of structural panels use purlins to brace all flat TC @ 24" oc.

Wind

Wind loads based on MWFRS with additional C&C member design.

Wind loading based on both gable and hip roof types.

Additional Notes

The overall height of this truss excluding overhang is 5-7-5.

WILLIAM H. KRICK
LICENSE
No. 70861
STATE OF FLORIDA
PROFESSIONAL ENGINEER

COA #0278

Florida Certificate of Product Approval #FL 1999

06/11/2022

****WARNING**** READ AND FOLLOW ALL NOTES ON THIS DRAWING!
****IMPORTANT**** FURNISH THIS DRAWING TO ALL CONTRACTORS INCLUDING THE INSTALLERS

Trusses require extreme care in fabricating, handling, shipping, installing and bracing. Refer to and follow the latest edition of BCSI (Building Component Safety Information, by TPI and SBCA) for safety practices prior to performing these functions. Installers shall provide temporary bracing per BCSI. Unless noted otherwise, top chord shall have properly attached structural sheathing and bottom chord shall have a properly attached rigid ceiling. Locations shown for permanent lateral restraint of webs shall have bracing installed per BCSI sections B3, B7, or B10, as applicable. Apply plates to each face of truss and position as shown above and on the Joint Details, unless noted otherwise. Refer to drawings 160A-Z for standard plate positions. Refer to job's General Notes page for additional information.

Alpine, a division of ITW Building Components Group Inc. shall not be responsible for any deviation from this drawing, any failure to build the truss in conformance with ANSI/TPI 1, or for handling, shipping, installation and bracing of trusses. A seal on this drawing or cover page listing this drawing, indicates acceptance of professional engineering responsibility solely for the design shown. The suitability and use of this drawing for any structure is the responsibility of the Building Designer per ANSI/TPI 1 Sec.2.

For more information see these web sites: Alpine: alpineitw.com; TPI: tpinst.org; SBCA: sbcacomponents.com; ICC: iccsafe.org; AWC: awc.org

ALPINE
AN ITW COMPANY
155 Harlem Ave
North Building, 4th Floor
Glenview, IL 60025

SEQN: 656867 HIPS FROM: CDM	Ply: 1 Qty: 1	**Job Number:** 22-7559 Judy Baughn **Truss Label:** C03	Cust: R 215 JRef: 1Xff2150006 T20 DrwNo: 131.22.0814.55547 KD / WHK 05/11/2022

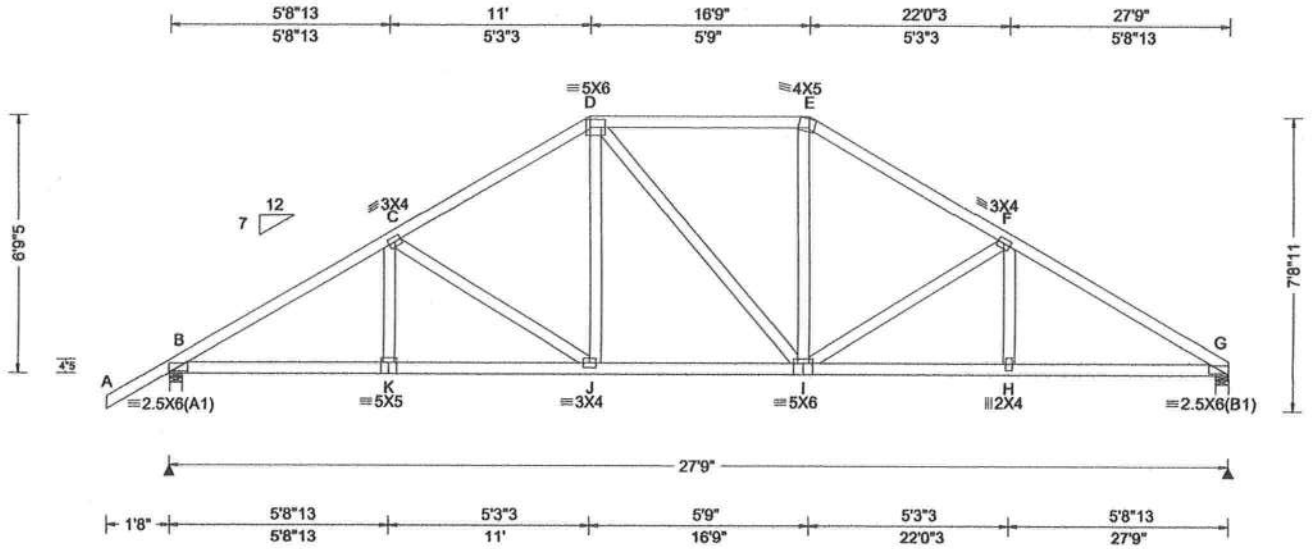

Loading Criteria (psf)	**Wind Criteria**	**Snow Criteria** (Pg,Pf in PSF)	**Defl/CSI Criteria**
TCLL: 20.00 TCDL: 10.00 BCLL: 0.00 BCDL: 10.00 Des Ld: 40.00 NCBCLL: 10.00 Soffit: 2.00 Load Duration: 1.25 Spacing: 24.0 "	Wind Std: ASCE 7-16 Speed: 130 mph Enclosure: Closed Risk Category: II EXP: C Kzt: NA Mean Height: 15.00 ft TCDL: 5.0 psf BCDL: 5.0 psf MWFRS Parallel Dist: h/2 to h C&C Dist a: 3.00 ft Loc. from endwall: not in 9.00 ft GCpi: 0.18 Wind Duration: 1.60	Pg: NA Ct: NA CAT: NA Pf: NA Ce: NA Lu: NA Cs: NA Snow Duration: NA Building Code: FBC 7th Ed. 2020 Res. TPI Std: 2014 Rep Fac: Yes FT/RT:20(0)/10(0) Plate Type(s): WAVE	PP Deflection in loc L/defl L/# VERT(LL): 0.064 J 999 240 VERT(CL): 0.132 J 999 180 HORZ(LL): 0.031 G - - HORZ(TL): 0.064 G - - Creep Factor: 2.0 Max TC CSI: 0.354 Max BC CSI: 0.452 Max Web CSI: 0.336 VIEW Ver: 21.02.01.1214.12

▲ Maximum Reactions (lbs)

	Gravity			Non-Gravity		
Loc	R+	/ R-	/ Rh	/ Rw	/ U	/ RL
B	1271	/-	/-	/759	/224	/196
G	1150	/-	/-	/663	/193	/-

Wind reactions based on MWFRS
B Brg Wid = 4.0 Min Req = 1.5 (Truss)
G Brg Wid = 4.0 Min Req = 1.5 (Truss)
Bearings B & G are a rigid surface.
Members not listed have forces less than 375#

Maximum Top Chord Forces Per Ply (lbs)

Chords	Tens.	Comp.	Chords	Tens.	Comp.
B - C	534	-1841	E - F	539	-1443
C - D	538	-1446	F - G	545	-1867
D - E	511	-1181			

Maximum Bot Chord Forces Per Ply (lbs)

Chords	Tens.	Comp.	Chords	Tens.	Comp.
B - K	1513	-382	I - H	1539	-395
K - J	1511	-383	H - G	1541	-394
J - I	1177	-276			

Maximum Web Forces Per Ply (lbs)

Webs	Tens.	Comp.	Webs	Tens.	Comp.
C - J	142	-399	I - E	395	-26
D - J	393	-24	I - F	151	-434

Lumber

Top chord: 2x4 SP #2;
Bot chord: 2x4 SP #2;
Webs: 2x4 SP #3;

Purlins

In lieu of structural panels use purlins to brace all flat TC @ 24" oc.

Wind

Wind loads based on MWFRS with additional C&C member design.

Wind loading based on both gable and hip roof types.

Additional Notes

The overall height of this truss excluding overhang is 6-9-5.

WILLIAM H. KRICK
LICENSE
No. 70861
STATE OF FLORIDA
PROFESSIONAL ENGINEER

COA #0278

Florida Certificate of Product Approval #FL 1999

05/11/2022

****WARNING**** READ AND FOLLOW ALL NOTES ON THIS DRAWING!
****IMPORTANT**** FURNISH THIS DRAWING TO ALL CONTRACTORS INCLUDING THE INSTALLERS

Trusses require extreme care in fabricating, handling, shipping, installing and bracing. Refer to and follow the latest edition of BCSI (Building Component Safety Information, by TPI and SBCA) for safety practices prior to performing these functions. Installers shall provide temporary bracing per BCSI. Unless noted otherwise, top chord shall have properly attached structural sheathing and bottom chord shall have a properly attached rigid ceiling. Locations shown for permanent lateral restraint of webs shall have bracing installed per BCSI sections B3, B7, or B10, as applicable. Apply plates to each face of truss and position as shown above and on the Joint Details, unless noted otherwise. Refer to drawings 160A-Z for standard plate positions. Refer to job's General Notes page for additional information.

Alpine, a division of ITW Building Components Group Inc. shall not be responsible for any deviation from this drawing, any failure to build the truss in conformance with ANSI/TPI 1, or for handling, shipping, installation and bracing of trusses. A seal on this drawing or cover page listing this drawing, indicates acceptance of professional engineering responsibility solely for the design shown. The suitability and use of this drawing for any structure is the responsibility of the Building Designer per ANSI/TPI 1 Sec.2.

For more information see these web sites: Alpine: alpineitw.com; TPI: tpinst.org; SBCA: sbcacomponents.com; ICC: iccsafe.org; AWC: awc.org

ALPINE
AN ITW COMPANY
155 Harlem Ave
North Building, 4th Floor
Glenview, IL 60025

SEQN: 656864 HIPS	Ply: 1	Job Number: 22-7559	Cust: R 215 JRef: 1Xff2150006 T21
FROM: CDM	Qty: 1	Judy Baughn	DrwNo: 131.22.0814.53603
		Truss Label: C04	KD / WHK 05/11/2022

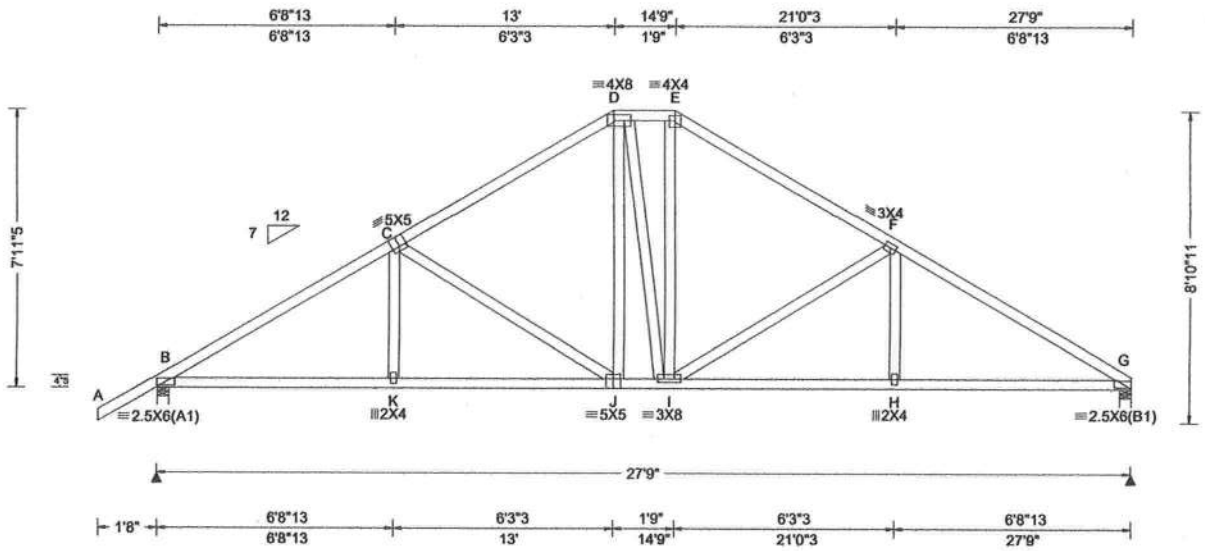

Loading Criteria (psf)

TCLL:	20.00
TCDL:	10.00
BCLL:	0.00
BCDL:	10.00
Des Ld:	40.00
NCBCLL:	10.00
Soffit:	2.00

Load Duration: 1.25
Spacing: 24.0 "

Wind Criteria
Wind Std: ASCE 7-16
Speed: 130 mph
Enclosure: Closed
Risk Category: II
EXP: C Kzt: NA
Mean Height: 15.00 ft
TCDL: 5.0 psf
BCDL: 5.0 psf
MWFRS Parallel Dist: h/2 to h
C&C Dist a: 3.00 ft
Loc. from endwall: not in 9.00 ft
GCpi: 0.18
Wind Duration: 1.60

Snow Criteria (Pg,Pf in PSF)
Pg: NA Ct: NA CAT: NA
Pf: NA Ce: NA
Lu: NA Cs: NA
Snow Duration: NA

Building Code:
FBC 7th Ed. 2020 Res.
TPI Std: 2014
Rep Fac: Yes
FT/RT:20(0)/10(0)
Plate Type(s):
WAVE

Defl/CSI Criteria

PP Deflection in	loc	L/defl	L/#
VERT(LL): 0.064	J	999	240
VERT(CL): 0.131	J	999	180
HORZ(LL): 0.031	G	-	-
HORZ(TL): 0.064	G	-	-

Creep Factor: 2.0
Max TC CSI: 0.486
Max BC CSI: 0.530
Max Web CSI: 0.606

VIEW Ver: 21.02.01.1214.12

▲ Maximum Reactions (lbs)

	Gravity			Non-Gravity		
Loc	R+	/ R-	/ Rh	/ Rw	/ U	/ RL
B	1271	/-	/-	/760	/221	/226
G	1150	/-	/-	/664	/189	/-

Wind reactions based on MWFRS
B Brg Wid = 4.0 Min Req = 1.5 (Truss)
G Brg Wid = 4.0 Min Req = 1.5 (Truss)
Bearings B & G are a rigid surface.
Members not listed have forces less than 375#

Maximum Top Chord Forces Per Ply (lbs)

Chords	Tens.	Comp.	Chords	Tens.	Comp.
B - C	401	-1817	E - F	387	-1302
C - D	388	-1306	F - G	410	-1837
D - E	381	-1037			

Maximum Bot Chord Forces Per Ply (lbs)

Chords	Tens.	Comp.	Chords	Tens.	Comp.
B - K	1484	-257	I - H	1504	-269
K - J	1481	-258	H - G	1507	-268
J - I	1035	-104			

Maximum Web Forces Per Ply (lbs)

Webs	Tens.	Comp.	Webs	Tens.	Comp.
C - J	183	-532	I - F	197	-560

Lumber
Top chord: 2x4 SP #2;
Bot chord: 2x4 SP #2;
Webs: 2x4 SP #3;

Purlins
In lieu of structural panels use purlins to brace all flat TC @ 24" oc.

Wind
Wind loads based on MWFRS with additional C&C member design.
Wind loading based on both gable and hip roof types.

Additional Notes
The overall height of this truss excluding overhang is 7-11-5.

WILLIAM H. KRICK
LICENSE
No. 70861
STATE OF FLORIDA
PROFESSIONAL ENGINEER

COA #0278
05/11/2022
Florida Certificate of Product Approval #FL 1999

****WARNING**** READ AND FOLLOW ALL NOTES ON THIS DRAWING!
****IMPORTANT**** FURNISH THIS DRAWING TO ALL CONTRACTORS INCLUDING THE INSTALLERS

Trusses require extreme care in fabricating, handling, shipping, installing and bracing. Refer to and follow the latest edition of BCSI (Building Component Safety Information, by TPI and SBCA) for safety practices prior to performing these functions. Installers shall provide temporary bracing per BCSI. Unless noted otherwise, top chord shall have properly attached structural sheathing and bottom chord shall have a properly attached rigid ceiling. Locations shown for permanent lateral restraint of webs shall have bracing installed per BCSI sections B3, B7, or B10, as applicable. Apply plates to each face of truss and position as shown above and on the Joint Details, unless noted otherwise. Refer to drawings 160A-Z for standard plate positions. Refer to job's General Notes page for additional information.

Alpine, a division of ITW Building Components Group Inc. shall not be responsible for any deviation from this drawing, any failure to build the truss in conformance with ANSI/TPI 1, or for handling, shipping, installation and bracing of trusses. A seal on this drawing or cover page listing this drawing, indicates acceptance of professional engineering responsibility solely for the design shown. The suitability and use of this drawing for any structure is the responsibility of the Building Designer per ANSI/TPI 1 Sec.2.

For more information see these web sites: Alpine: alpineitw.com; TPI: tpinst.org; SBCA: sbcacomponents.com; ICC: iccsafe.org; AWC: awc.org

ALPINE
AN ITW COMPANY
155 Harlem Ave
North Building, 4th Floor
Glenview, IL 60025

SEQN: 656861 COMN FROM: CDM	Ply: 1 Qty: 2	**Job Number:** 22-7559 Judy Baughn **Truss Label:** C05	Cust: R 215 JRef: 1Xff2150006 T22 DrwNo: 131.22.0814.51437 KD / WHK 05/11/2022

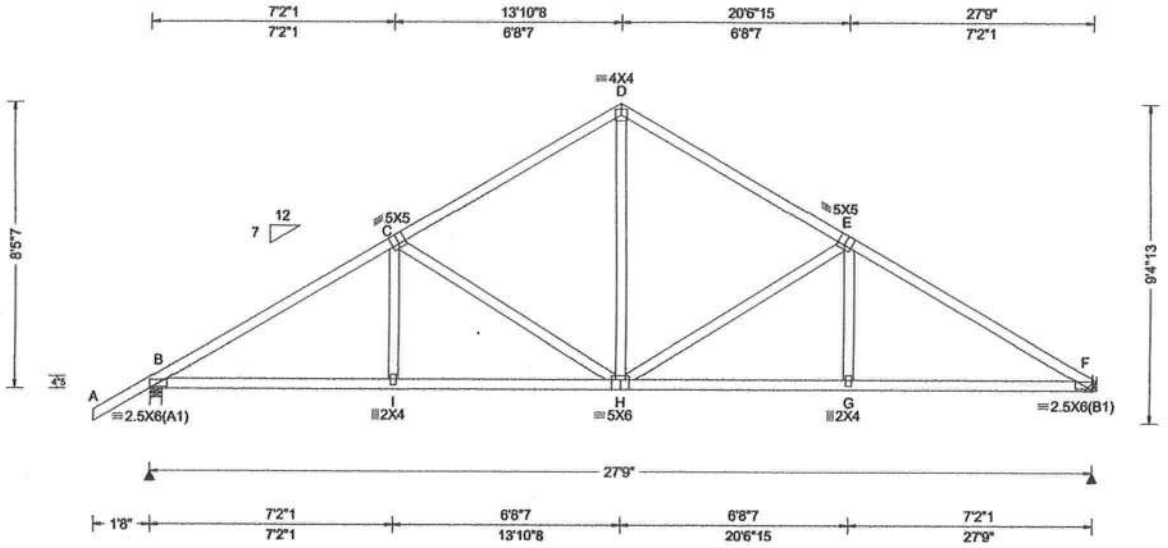

Loading Criteria (psf)

TCLL:	20.00
TCDL:	10.00
BCLL:	0.00
BCDL:	10.00
Des Ld:	40.00
NCBCLL:	10.00
Soffit:	2.00

Load Duration: 1.25
Spacing: 24.0 "

Wind Criteria
Wind Std: ASCE 7-16
Speed: 130 mph
Enclosure: Closed
Risk Category: II
EXP: C Kzt: NA
Mean Height: 15.00 ft
TCDL: 5.0 psf
BCDL: 5.0 psf
MWFRS Parallel Dist: h to 2h
C&C Dist a: 3.00 ft
Loc. from endwall: not in 9.00 ft
GCpi: 0.18
Wind Duration: 1.60

Snow Criteria (Pg,Pf in PSF)
Pg: NA Ct: NA CAT: NA
Pf: NA Ce: NA
Lu: NA Cs: NA
Snow Duration: NA

Building Code:
FBC 7th Ed. 2020 Res.
TPI Std: 2014
Rep Fac: Yes
FT/RT:20(0)/10(0)
Plate Type(s):
WAVE

Defl/CSI Criteria

PP Deflection in	loc	L/defl	L/#
VERT(LL): 0.064	H	999	240
VERT(CL): 0.132	H	999	180
HORZ(LL): 0.031	F	-	-
HORZ(TL): 0.064	F	-	-

Creep Factor: 2.0
Max TC CSI: 0.547
Max BC CSI: 0.579
Max Web CSI: 0.703

VIEW Ver: 21.02.01.1214.12

▲ Maximum Reactions (lbs)

	Gravity			Non-Gravity		
Loc	R+	/ R-	/ Rh	/ Rw	/ U	/ RL
B	1272	/-	/-	/759	/21	/239
F	1149	/-	/-	/663	/13	/-

Wind reactions based on MWFRS
B Brg Wid = 4.0 Min Req = 1.5 (Truss)
F Brg Wid = - Min Req = -
Bearing B is a rigid surface.
Members not listed have forces less than 375#

Maximum Top Chord Forces Per Ply (lbs)

Chords	Tens.	Comp.	Chords	Tens.	Comp.
B - C	340	-1801	D - E	324	-1256
C - D	323	-1255	E - F	349	-1822

Maximum Bot Chord Forces Per Ply (lbs)

Chords	Tens.	Comp.	Chords	Tens.	Comp.
B - I	1464	-199	H - G	1485	-210
I - H	1462	-200	G - F	1488	-209

Maximum Web Forces Per Ply (lbs)

Webs	Tens.	Comp.	Webs	Tens.	Comp.
C - H	196	-561	H - E	207	-589
D - H	752	-149			

Lumber
Top chord: 2x4 SP #2;
Bot chord: 2x4 SP #2;
Webs: 2x4 SP #3;

Hangers / Ties
(J) Hanger Support Required, by others

Wind
Wind loads based on MWFRS with additional C&C member design.
Wind loading based on both gable and hip roof types.

Additional Notes
The overall height of this truss excluding overhang is 8-5-7.

WILLIAM H. KRICK
LICENSE
No. 70861
STATE OF FLORIDA
PROFESSIONAL ENGINEER

COA #0278
05/11/2022
Florida Certificate of Product Approval #FL 1999

****WARNING**** READ AND FOLLOW ALL NOTES ON THIS DRAWING!
****IMPORTANT**** FURNISH THIS DRAWING TO ALL CONTRACTORS INCLUDING THE INSTALLERS

Trusses require extreme care in fabricating, handling, shipping, installing and bracing. Refer to and follow the latest edition of BCSI (Building Component Safety Information, by TPI and SBCA) for safety practices prior to performing these functions. Installers shall provide temporary bracing per BCSI. Unless noted otherwise, top chord shall have properly attached structural sheathing and bottom chord shall have a properly attached rigid ceiling. Locations shown for permanent lateral restraint of webs shall have bracing installed per BCSI sections B3, B7, or B10, as applicable. Apply plates to each face of truss and position as shown above and on the Joint Details, unless noted otherwise. Refer to drawings 160A-Z for standard plate positions. Refer to job's General Notes page for additional information.

Alpine, a division of ITW Building Components Group Inc. shall not be responsible for any deviation from this drawing, any failure to build the truss in conformance with ANSI/TPI 1, or for handling, shipping, installation and bracing of trusses. A seal on this drawing or cover page listing this drawing, indicates acceptance of professional engineering responsibility solely for the design shown. The suitability and use of this drawing for any structure is the responsibility of the Building Designer per ANSI/TPI 1 Sec.2.

For more information see these web sites: Alpine: alpineitw.com; TPI: tpinst.org; SBCA: sbcacomponents.com; ICC: iccsafe.org; AWC: awc.org

ALPINE
AN ITW COMPANY
155 Harlem Ave
North Building, 4th Floor
Glenview, IL 60025

SEQN: 656858 HIPM	Ply: 1	**Job Number:** 22-7559	Cust: R 215 JRef: 1Xff2150006 T28
FROM: CDM	Qty: 1	Judy Baughn	DrwNo: 131.22.0814.49760
		Truss Label: C06	KD / WHK 05/11/2022

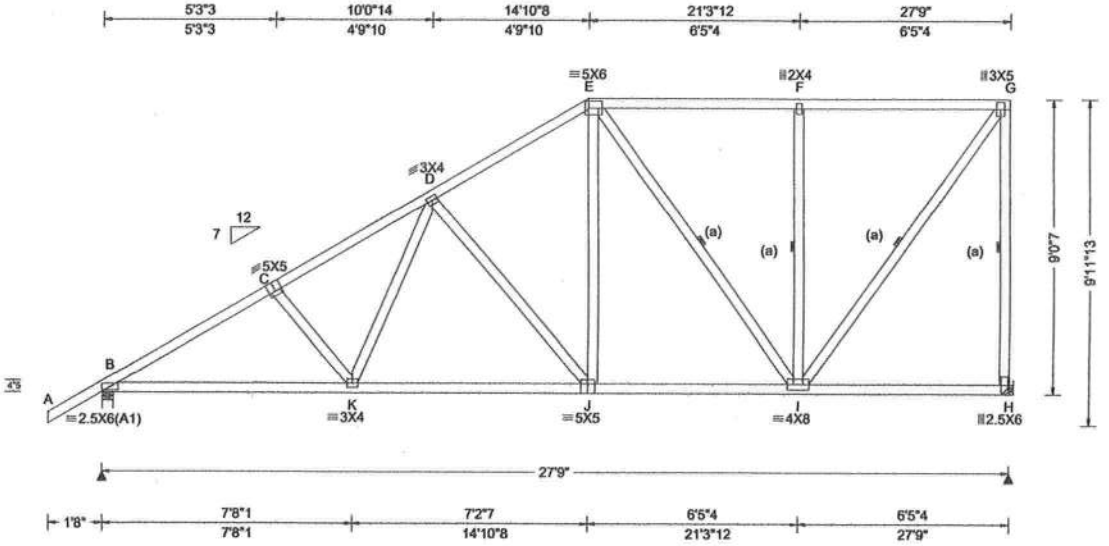

Loading Criteria (psf)	**Wind Criteria**	**Snow Criteria** (Pg,Pf in PSF)	**Defl/CSI Criteria**
TCLL: 20.00	Wind Std: ASCE 7-16	Pg: NA Ct: NA CAT: NA	PP Deflection in loc L/defl L/#
TCDL: 10.00	Speed: 130 mph	Pf: NA Ce: NA	VERT(LL): 0.059 D 999 240
BCLL: 0.00	Enclosure: Closed	Lu: NA Cs: NA	VERT(CL): 0.122 D 999 180
BCDL: 10.00	Risk Category: II	Snow Duration: NA	HORZ(LL): 0.021 H - -
Des Ld: 40.00	EXP: C Kzt: NA		HORZ(TL): 0.043 H - -
NCBCLL: 10.00	Mean Height: 15.00 ft	Building Code:	Creep Factor: 2.0
Soffit: 2.00	TCDL: 5.0 psf	FBC 7th Ed. 2020 Res.	Max TC CSI: 0.727
Load Duration: 1.25	BCDL: 5.0 psf	TPI Std: 2014	Max BC CSI: 0.609
Spacing: 24.0 "	MWFRS Parallel Dist: h to 2h	Rep Fac: Yes	Max Web CSI: 0.569
	C&C Dist a: 3.00 ft	FT/RT:20(0)/10(0)	
	Loc. from endwall: not in 9.00 ft	Plate Type(s):	
	GCpi: 0.18	WAVE	VIEW Ver: 21.02.01.1214.12
	Wind Duration: 1.60		

▲ Maximum Reactions (lbs)

	Gravity			Non-Gravity		
Loc	R+	/ R-	/ Rh	/ Rw	/ U	/ RL
B	1277	/-	/-	/817	/69	/242
H	1144	/-	/-	/641	/204	/-

Wind reactions based on MWFRS
B Brg Wid = 4.0 Min Req = 1.5 (Truss)
H Brg Wid = - Min Req = -
Bearing B is a rigid surface.
Members not listed have forces less than 375#

Maximum Top Chord Forces Per Ply (lbs)

Chords	Tens.	Comp.	Chords	Tens.	Comp.
B - C	449	-1852	E - F	348	-687
C - D	455	-1662	F - G	348	-687
D - E	435	-1143			

Maximum Bot Chord Forces Per Ply (lbs)

Chords	Tens.	Comp.	Chords	Tens.	Comp.
B - K	1528	-629	J - I	921	-420
K - J	1239	-529			

Maximum Web Forces Per Ply (lbs)

Webs	Tens.	Comp.	Webs	Tens.	Comp.
K - D	411	-36	F - I	452	-473
D - J	178	-498	I - G	1158	-587
E - J	535	-75	G - H	620	-1092
E - I	121	-395			

Lumber

Top chord: 2x4 SP #2;
Bot chord: 2x4 SP #2;
Webs: 2x4 SP #3;

Bracing

(a) Continuous lateral restraint equally spaced on member.

Hangers / Ties

(J) Hanger Support Required, by others

Purlins

In lieu of structural panels use purlins to brace all flat TC @ 24" oc.

Wind

Wind loads based on MWFRS with additional C&C member design.

Right end vertical not exposed to wind pressure.

Wind loading based on both gable and hip roof types.

Additional Notes

The overall height of this truss excluding overhang is 9-0-7.

WILLIAM H. KRICK
LICENSE
No. 70861
STATE OF FLORIDA
PROFESSIONAL ENGINEER

COA #0278

05/11/2022

Florida Certificate of Product Approval #FL 1999

WARNING READ AND FOLLOW ALL NOTES ON THIS DRAWING!
IMPORTANT FURNISH THIS DRAWING TO ALL CONTRACTORS INCLUDING THE INSTALLERS

Trusses require extreme care in fabricating, handling, shipping, installing and bracing. Refer to and follow the latest edition of BCSI (Building Component Safety Information, by TPI and SBCA) for safety practices prior to performing these functions. Installers shall provide temporary bracing per BCSI. Unless noted otherwise, top chord shall have properly attached structural sheathing and bottom chord shall have a properly attached rigid ceiling. Locations shown for permanent lateral restraint of webs shall have bracing installed per BCSI sections B3, B7, or B10, as applicable. Apply plates to each face of truss and position as shown above and on the Joint Details, unless noted otherwise. Refer to drawings 160A-Z for standard plate positions. Refer to job's General Notes page for additional information.

Alpine, a division of ITW Building Components Group Inc. shall not be responsible for any deviation from this drawing, any failure to build the truss in conformance with ANSI/TPI 1, or for handling, shipping, installation and bracing of trusses. A seal on this drawing or cover page listing this drawing, indicates acceptance of professional engineering responsibility solely for the design shown. The suitability and use of this drawing for any structure is the responsibility of the Building Designer per ANSI/TPI 1 Sec.2.

For more information see these web sites: Alpine: alpineitw.com; TPI: tpinst.org; SBCA: sbcacomponents.com; ICC: iccsafe.org; AWC: awc.org

ALPINE
AN ITW COMPANY
155 Harlem Ave
North Building, 4th Floor
Glenview, IL 60025

SEQN: 656855 HIPM FROM: CDM	Ply: 1 Qty: 1	**Job Number:** 22-7559 Judy Baughn **Truss Label:** C07	Cust: R 215 JRef: 1Xff2150006 T27 DrwNo: 131.22.0814.47757 KD / WHK 05/11/2022

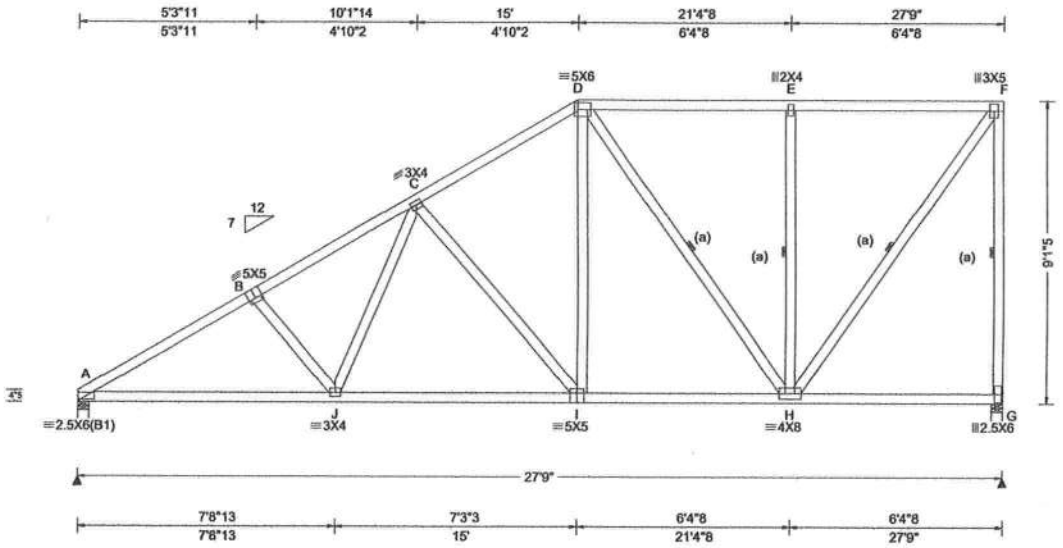

Loading Criteria (psf)	**Wind Criteria**	**Snow Criteria** (Pg,Pf in PSF)	**Defl/CSI Criteria**
TCLL: 20.00 TCDL: 10.00 BCLL: 0.00 BCDL: 10.00 Des Ld: 40.00 NCBCLL: 10.00 Soffit: 2.00 Load Duration: 1.25 Spacing: 24.0 "	Wind Std: ASCE 7-16 Speed: 130 mph Enclosure: Closed Risk Category: II EXP: C Kzt: NA Mean Height: 15.00 ft TCDL: 5.0 psf BCDL: 5.0 psf MWFRS Parallel Dist: h to 2h C&C Dist a: 3.00 ft Loc. from endwall: not in 9.00 ft GCpi: 0.18 Wind Duration: 1.60	Pg: NA Ct: NA CAT: NA Pf: NA Ce: NA Lu: NA Cs: NA Snow Duration: NA Building Code: FBC 7th Ed. 2020 Res. TPI Std: 2014 Rep Fac: Yes FT/RT:20(0)/10(0) Plate Type(s): WAVE	PP Deflection in loc L/defl L/# VERT(LL): 0.058 C 999 240 VERT(CL): 0.121 C 999 180 HORZ(LL): 0.020 G - - HORZ(TL): 0.043 G - - Creep Factor: 2.0 Max TC CSI: 0.710 Max BC CSI: 0.632 Max Web CSI: 0.597 VIEW Ver: 21.02.01.1214.12

▲ Maximum Reactions (lbs)

	Gravity			Non-Gravity		
Loc	R+	/ R-	/ Rh	/ Rw	/ U	/ RL
A	1160	/-	/-	/722	/55	/225
G	1148	/-	/-	/646	/204	/-

Wind reactions based on MWFRS
A Brg Wid = 4.0 Min Req = 1.5 (Truss)
G Brg Wid = 4.0 Min Req = 1.5 (Truss)
Bearings A & G are a rigid surface.
Members not listed have forces less than 375#

Maximum Top Chord Forces Per Ply (lbs)

Chords	Tens.	Comp.	Chords	Tens.	Comp.
A - B	469	-1880	D - E	345	-679
B - C	474	-1686	E - F	344	-679
C - D	435	-1140			

Maximum Bot Chord Forces Per Ply (lbs)

Chords	Tens.	Comp.	Chords	Tens.	Comp.
A - J	1560	-654	I - H	918	-420
J - I	1246	-536			

Maximum Web Forces Per Ply (lbs)

Webs	Tens.	Comp.	Webs	Tens.	Comp.
J - C	426	-48	E - H	448	-467
C - I	185	-514	H - F	1158	-588
D - I	541	-79	F - G	620	-1096
D - H	128	-408			

Lumber

Top chord: 2x4 SP #2;
Bot chord: 2x4 SP #2;
Webs: 2x4 SP #3;

Bracing

(a) Continuous lateral restraint equally spaced on member.

Purlins

In lieu of structural panels use purlins to brace all flat TC @ 24" oc.

Wind

Wind loads based on MWFRS with additional C&C member design.

Right end vertical not exposed to wind pressure.

Wind loading based on both gable and hip roof types.

Additional Notes

The overall height of this truss excluding overhang is 9-1-5.

WILLIAM H. KRICK
LICENSE
No. 70861
STATE OF FLORIDA
PROFESSIONAL ENGINEER

COA #0278

05/11/2022

Florida Certificate of Product Approval #FL 1999

****WARNING**** READ AND FOLLOW ALL NOTES ON THIS DRAWING!
****IMPORTANT**** FURNISH THIS DRAWING TO ALL CONTRACTORS INCLUDING THE INSTALLERS

Trusses require extreme care in fabricating, handling, shipping, installing and bracing. Refer to and follow the latest edition of BCSI (Building Component Safety Information, by TPI and SBCA) for safety practices prior to performing these functions. Installers shall provide temporary bracing per BCSI. Unless noted otherwise, top chord shall have properly attached structural sheathing and bottom chord shall have a properly attached rigid ceiling. Locations shown for permanent lateral restraint of webs shall have bracing installed per BCSI sections B3, B7, or B10, as applicable. Apply plates to each face of truss and position as shown above and on the Joint Details, unless noted otherwise. Refer to drawings 160A-Z for standard plate positions. Refer to job's General Notes page for additional information.

Alpine, a division of ITW Building Components Group Inc. shall not be responsible for any deviation from this drawing, any failure to build the truss in conformance with ANSI/TPI 1, or for handling, shipping, installation and bracing of trusses. A seal on this drawing or cover page listing this drawing, indicates acceptance of professional engineering responsibility solely for the design shown. The suitability and use of this drawing for any structure is the responsibility of the Building Designer per ANSI/TPI 1 Sec.2.

For more information see these web sites: Alpine: alpineitw.com; TPI: tpinst.org; SBCA: sbcacomponents.com; ICC: iccsafe.org; AWC: awc.org

ALPINE
AN ITW COMPANY
155 Harlem Ave
North Building, 4th Floor
Glenview, IL 60025

SEQN: 656849 HIPM FROM: CDM	Ply: 1 Qty: 1	**Job Number:** 22-7559 Judy Baughn **Truss Label:** C08	Cust: R 215 JRef: 1Xff2150006 T26 DrwNo: 131.22.0814.45207 KD / WHK 05/11/2022

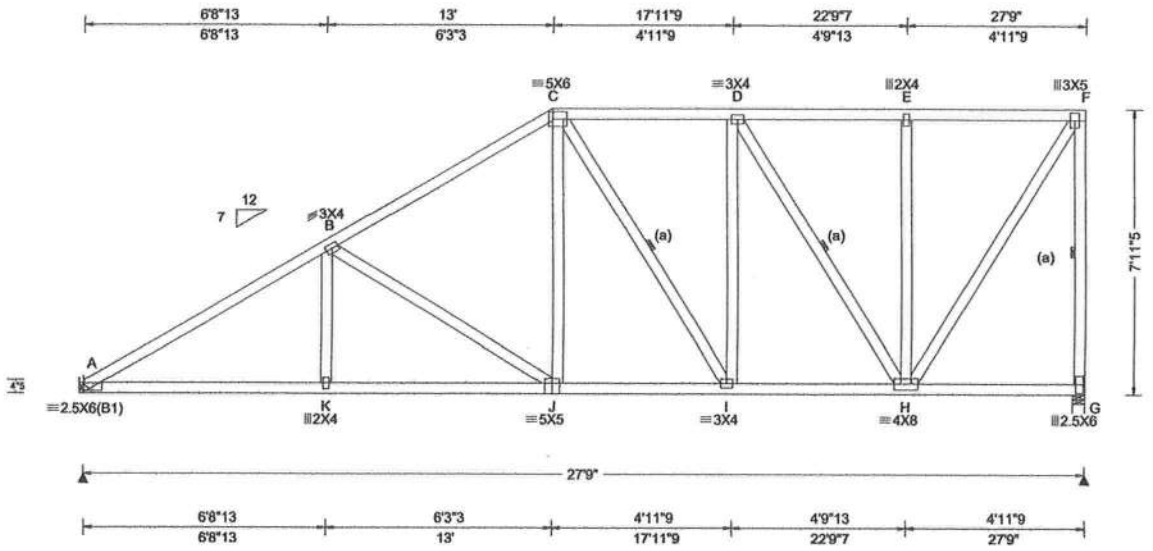

Loading Criteria (psf)
TCLL: 20.00
TCDL: 10.00
BCLL: 0.00
BCDL: 10.00
Des Ld: 40.00
NCBCLL: 10.00
Soffit: 2.00
Load Duration: 1.25
Spacing: 24.0 "

Wind Criteria
Wind Std: ASCE 7-16
Speed: 130 mph
Enclosure: Closed
Risk Category: II
EXP: C Kzt: NA
Mean Height: 15.00 ft
TCDL: 5.0 psf
BCDL: 5.0 psf
MWFRS Parallel Dist: h/2 to h
C&C Dist a: 3.00 ft
Loc. from endwall: not in 9.00 ft
GCpi: 0.18
Wind Duration: 1.60

Snow Criteria (Pg,Pf in PSF)
Pg: NA Ct: NA CAT: NA
Pf: NA Ce: NA
Lu: NA Cs: NA
Snow Duration: NA

Building Code:
FBC 7th Ed. 2020 Res.
TPI Std: 2014
Rep Fac: Yes
FT/RT:20(0)/10(0)
Plate Type(s):
WAVE

Defl/CSI Criteria

PP Deflection in	loc	L/defl	L/#
VERT(LL): 0.055	J	999	240
VERT(CL): 0.114	J	999	180
HORZ(LL): 0.022	G	-	-
HORZ(TL): 0.047	G	-	-

Creep Factor: 2.0
Max TC CSI: 0.485
Max BC CSI: 0.534
Max Web CSI: 0.937

VIEW Ver: 21.02.01.1214.12

▲ Maximum Reactions (lbs)

	Gravity			Non-Gravity		
Loc	R+	/ R-	/ Rh	/ Rw	/ U	/ RL
A	1159	/-	/-	/711	/159	/267
G	1149	/-	/-	/627	/245	/-

Wind reactions based on MWFRS
A Brg Wid = - Min Req = -
G Brg Wid = 4.0 Min Req = 1.5 (Truss)
Bearing G is a rigid surface.
Members not listed have forces less than 375#

Maximum Top Chord Forces Per Ply (lbs)

Chords	Tens.	Comp.	Chords	Tens.	Comp.
A - B	541	-1862	D - E	332	-637
B - C	526	-1333	E - F	332	-637
C - D	494	-969			

Maximum Bot Chord Forces Per Ply (lbs)

Chords	Tens.	Comp.	Chords	Tens.	Comp.
A - K	1528	-656	J - I	1059	-503
K - J	1525	-657	I - H	960	-495

Maximum Web Forces Per Ply (lbs)

Webs	Tens.	Comp.	Webs	Tens.	Comp.
B - J	186	-556	H - F	1169	-609
C - J	448	-45	F - G	632	-1108
D - H	312	-620			

Lumber
Top chord: 2x4 SP #2;
Bot chord: 2x4 SP #2;
Webs: 2x4 SP #3;

Bracing
(a) Continuous lateral restraint equally spaced on member.

Hangers / Ties
(J) Hanger Support Required, by others

Purlins
In lieu of structural panels use purlins to brace all flat TC @ 24" oc.

Wind
Wind loads based on MWFRS with additional C&C member design.
Right end vertical not exposed to wind pressure.
Wind loading based on both gable and hip roof types.

Additional Notes
The overall height of this truss excluding overhang is 7-11-5.

WILLIAM H. KRICK
LICENSE
No. 70861
STATE OF FLORIDA
PROFESSIONAL ENGINEER

COA #0278
06/11/2022
Florida Certificate of Product Approval #FL 1999

****WARNING**** READ AND FOLLOW ALL NOTES ON THIS DRAWING!
****IMPORTANT**** FURNISH THIS DRAWING TO ALL CONTRACTORS INCLUDING THE INSTALLERS

Trusses require extreme care in fabricating, handling, shipping, installing and bracing. Refer to and follow the latest edition of BCSI (Building Component Safety Information, by TPI and SBCA) for safety practices prior to performing these functions. Installers shall provide temporary bracing per BCSI. Unless noted otherwise, top chord shall have properly attached structural sheathing and bottom chord shall have a properly attached rigid ceiling. Locations shown for permanent lateral restraint of webs shall have bracing installed per BCSI sections B3, B7, or B10, as applicable. Apply plates to each face of truss and position as shown above and on the Joint Details, unless noted otherwise. Refer to drawings 160A-Z for standard plate positions. Refer to job's General Notes page for additional information.

Alpine, a division of ITW Building Components Group Inc. shall not be responsible for any deviation from this drawing, any failure to build the truss in conformance with ANSI/TPI 1, or for handling, shipping, installation and bracing of trusses. A seal on this drawing or cover page listing this drawing, indicates acceptance of professional engineering responsibility solely for the design shown. The suitability and use of this drawing for any structure is the responsibility of the Building Designer per ANSI/TPI 1 Sec.2.

For more information see these web sites: Alpine: alpineitw.com; TPI: tpinst.org; SBCA: sbcacomponents.com; ICC: iccsafe.org; AWC: awc.org

ALPINE
AN ITW COMPANY
155 Harlem Ave
North Building, 4th Floor
Glenview, IL 60025

SEQN: 656846 HIPS	Ply: 1	Job Number: 22-7559	Cust: R 215 JRef: 1Xff2150006 T25
FROM: CDM	Qty: 1	Judy Baughn	DrwNo: 131.22.0814.43433
		Truss Label: C09	KD / WHK 05/11/2022

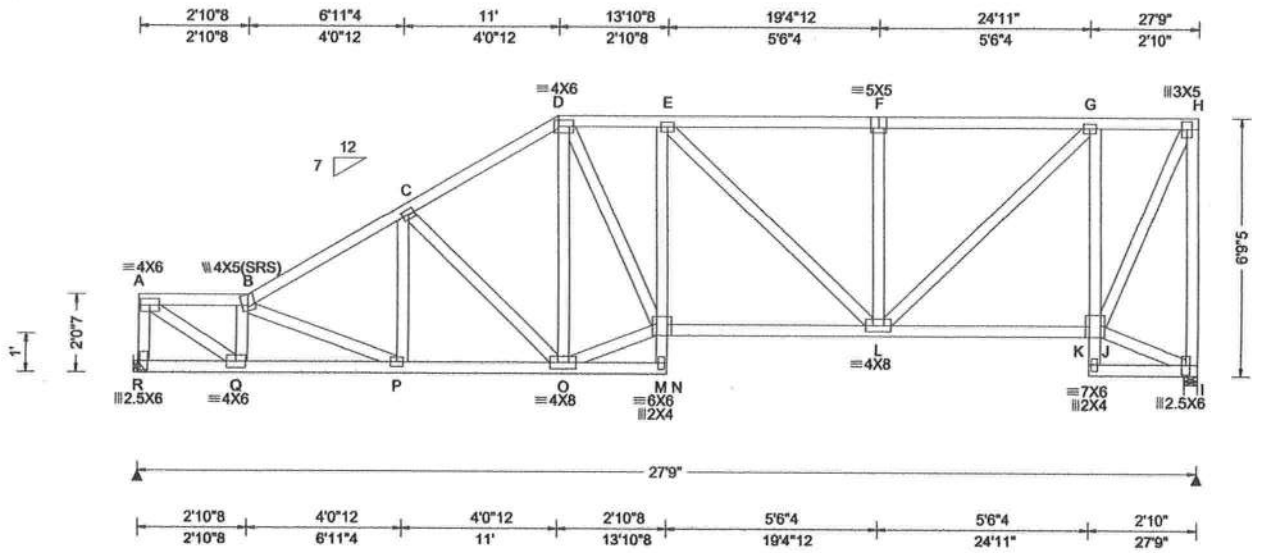

Loading Criteria (psf)

TCLL:	20.00
TCDL:	10.00
BCLL:	0.00
BCDL:	10.00
Des Ld:	40.00
NCBCLL:	10.00
Soffit:	2.00

Load Duration: 1.25
Spacing: 24.0 "

Wind Criteria
Wind Std: ASCE 7-16
Speed: 130 mph
Enclosure: Closed
Risk Category: II
EXP: C Kzt: NA
Mean Height: 15.00 ft
TCDL: 5.0 psf
BCDL: 5.0 psf
MWFRS Parallel Dist: h/2 to h
C&C Dist a: 3.00 ft
Loc. from endwall: not in 9.00 ft
GCpi: 0.18
Wind Duration: 1.60

Snow Criteria (Pg,Pf in PSF)
Pg: NA Ct: NA CAT: NA
Pf: NA Ce: NA
Lu: NA Cs: NA
Snow Duration: NA

Building Code:
FBC 7th Ed. 2020 Res.
TPI Std: 2014
Rep Fac: Yes
FT/RT:20(0)/10(0)
Plate Type(s):
WAVE

Defl/CSI Criteria

PP Deflection in	loc	L/defl	L/#
VERT(LL): 0.074	E	999	240
VERT(CL): 0.153	E	999	180
HORZ(LL): 0.036	I	-	-
HORZ(TL): 0.075	I	-	-

Creep Factor: 2.0
Max TC CSI: 0.370
Max BC CSI: 0.522
Max Web CSI: 0.917

VIEW Ver: 21.02.01.1214.12

▲ Maximum Reactions (lbs)

	Gravity			Non-Gravity		
Loc	R+	/ R-	/ Rh	/ Rw	/ U	/ RL
R	1154	/-	/-	/653	/177	/166
I	1154	/-	/-	/610	/235	/-

Wind reactions based on MWFRS
R Brg Wid = - Min Req = -
I Brg Wid = 4.0 Min Req = 1.5 (Truss)
Bearing I is a rigid surface.
Members not listed have forces less than 375#

Maximum Top Chord Forces Per Ply (lbs)

Chords	Tens.	Comp.	Chords	Tens.	Comp.
A - B	565	-1556	E - F	676	-1272
B - C	669	-1793	F - G	676	-1272
C - D	650	-1447	G - H	304	-548
D - E	793	-1520			

Maximum Bot Chord Forces Per Ply (lbs)

Chords	Tens.	Comp.	Chords	Tens.	Comp.
Q - P	1722	-809	M - L	1526	-800
P - O	1492	-701	L - J	575	-321

Maximum Web Forces Per Ply (lbs)

Webs	Tens.	Comp.	Webs	Tens.	Comp.
A - R	455	-1121	O - M	1277	-626
A - Q	1867	-677	L - G	984	-511
Q - B	431	-1007	G - J	627	-988
C - O	156	-431	J - H	1205	-669
D - M	728	-450	H - I	641	-1122

Lumber
Top chord: 2x4 SP #2;
Bot chord: 2x4 SP #2;
Webs: 2x4 SP #3;

Plating Notes
All plates are 3X4 except as noted.

Hangers / Ties
(J) Hanger Support Required, by others

Purlins
In lieu of structural panels use purlins to brace all flat TC @ 24" oc.

Wind
Wind loads based on MWFRS with additional C&C member design.
End verticals not exposed to wind pressure.
Wind loading based on both gable and hip roof types.

Additional Notes
The overall height of this truss excluding overhang is 6-9-5.

WILLIAM H. KRICK
LICENSE
No. 70861
STATE OF FLORIDA
PROFESSIONAL ENGINEER

COA #0278
05/11/2022
Florida Certificate of Product Approval #FL 1999

WARNING READ AND FOLLOW ALL NOTES ON THIS DRAWING!
IMPORTANT FURNISH THIS DRAWING TO ALL CONTRACTORS INCLUDING THE INSTALLERS

Trusses require extreme care in fabricating, handling, shipping, installing and bracing. Refer to and follow the latest edition of BCSI (Building Component Safety Information, by TPI and SBCA) for safety practices prior to performing these functions. Installers shall provide temporary bracing per BCSI. Unless noted otherwise, top chord shall have properly attached structural sheathing and bottom chord shall have a properly attached rigid ceiling. Locations shown for permanent lateral restraint of webs shall have bracing installed per BCSI sections B3, B7, or B10, as applicable. Apply plates to each face of truss and position as shown above and on the Joint Details, unless noted otherwise. Refer to drawings 160A-Z for standard plate positions. Refer to job's General Notes page for additional information.

Alpine, a division of ITW Building Components Group Inc. shall not be responsible for any deviation from this drawing, any failure to build the truss in conformance with ANSI/TPI 1, or for handling, shipping, installation and bracing of trusses. A seal on this drawing or cover page listing this drawing, indicates acceptance of professional engineering responsibility solely for the design shown. The suitability and use of this drawing for any structure is the responsibility of the Building Designer per ANSI/TPI 1 Sec.2.

For more information see these web sites: Alpine: alpineitw.com; TPI: tpinst.org; SBCA: sbcacomponents.com; ICC: iccsafe.org; AWC: awc.org

ALPINE AN ITW COMPANY
155 Harlem Ave
North Building, 4th Floor
Glenview, IL 60025

SEQN: 656843 HIPS	Ply: 1	Job Number: 22-7559	Cust: R 215 JRef: 1Xff2150006 T29
FROM: CDM	Qty: 1	Judy Baughn	DrwNo: 131.22.0814.41420
		Truss Label: C10	KD / WHK 05/11/2022

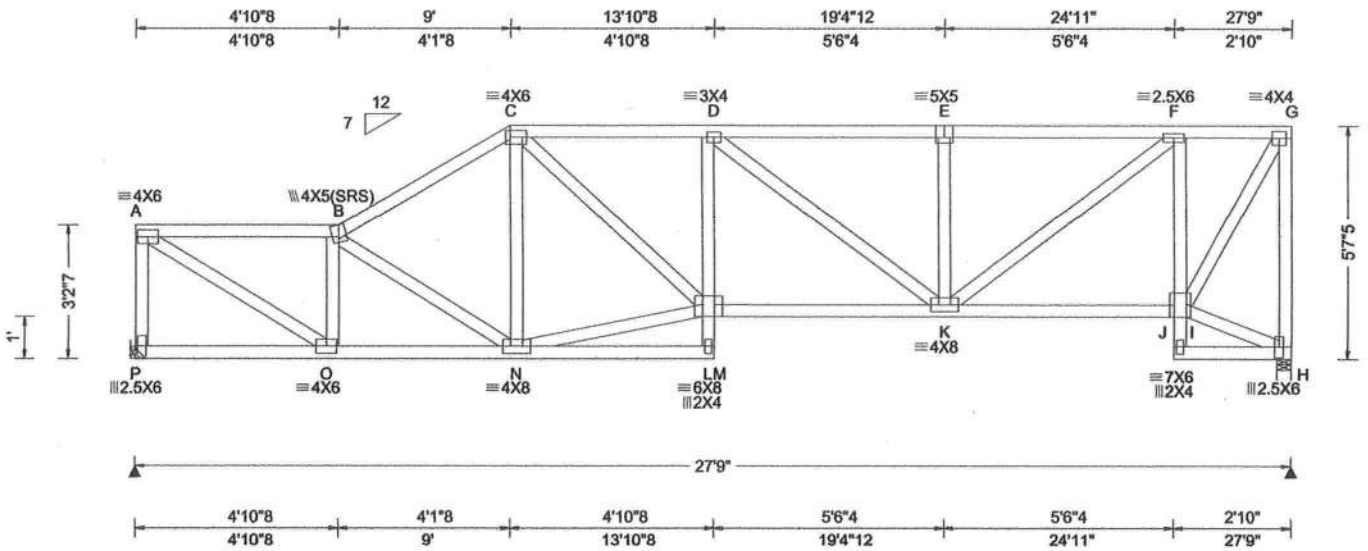

Loading Criteria (psf)

TCLL:	20.00
TCDL:	10.00
BCLL:	0.00
BCDL:	10.00
Des Ld:	40.00
NCBCLL:	10.00
Soffit:	2.00

Load Duration: 1.25
Spacing: 24.0 "

Wind Criteria
Wind Std: ASCE 7-16
Speed: 130 mph
Enclosure: Closed
Risk Category: II
EXP: C Kzt: NA
Mean Height: 15.00 ft
TCDL: 5.0 psf
BCDL: 5.0 psf
MWFRS Parallel Dist: h/2 to h
C&C Dist a: 3.00 ft
Loc. from endwall: not in 9.00 ft
GCpi: 0.18
Wind Duration: 1.60

Snow Criteria (Pg,Pf in PSF)
Pg: NA Ct: NA CAT: NA
Pf: NA Ce: NA
Lu: NA Cs: NA
Snow Duration: NA

Building Code:
FBC 7th Ed. 2020 Res.
TPI Std: 2014
Rep Fac: Yes
FT/RT:20(0)/10(0)
Plate Type(s):
WAVE

Defl/CSI Criteria

PP Deflection in	loc	L/defl	L/#
VERT(LL): 0.092	D	999	240
VERT(CL): 0.191	D	999	180
HORZ(LL): 0.039	H	-	-
HORZ(TL): 0.080	H	-	-

Creep Factor: 2.0
Max TC CSI: 0.430
Max BC CSI: 0.583
Max Web CSI: 0.691

VIEW Ver: 21.02.01.1214.12

▲ Maximum Reactions (lbs)

Loc	Gravity R+	Gravity / R-	Gravity / Rh	Non-Gravity / Rw	Non-Gravity / U	Non-Gravity / RL
P	1154	/-	/-	/611	/194	/84
H	1154	/-	/-	/589	/224	/-

Wind reactions based on MWFRS
P Brg Wid = - Min Req = -
H Brg Wid = 4.0 Min Req = 1.5 (Truss)
Bearing H is a rigid surface.
Members not listed have forces less than 375#

Maximum Top Chord Forces Per Ply (lbs)

Chords	Tens.	Comp.	Chords	Tens.	Comp.
A - B	716	-1543	D - E	885	-1612
B - C	785	-1617	E - F	885	-1612
C - D	1082	-1943	F - G	406	-704

Maximum Bot Chord Forces Per Ply (lbs)

Chords	Tens.	Comp.	Chords	Tens.	Comp.
O - N	1632	-854	K - I	737	-428
L - K	1954	-1092			

Maximum Web Forces Per Ply (lbs)

Webs	Tens.	Comp.	Webs	Tens.	Comp.
A - P	584	-1109	D - K	261	-432
A - O	1814	-839	K - F	1112	-599
O - B	508	-890	F - I	648	-984
C - L	801	-500	I - G	1284	-741
N - L	1341	-706	G - H	664	-1121

Lumber

Top chord: 2x4 SP #2;
Bot chord: 2x4 SP #2;
Webs: 2x4 SP #3;

Hangers / Ties

(J) Hanger Support Required, by others

Purlins

In lieu of structural panels use purlins to brace all flat TC @ 24" oc.

Wind

Wind loads based on MWFRS with additional C&C member design.

End verticals not exposed to wind pressure.

Wind loading based on both gable and hip roof types.

Additional Notes

The overall height of this truss excluding overhang is 5-7-5.

WILLIAM H. KRICK
LICENSE
No. 70861
STATE OF FLORIDA
PROFESSIONAL ENGINEER

COA #0278

05/11/2022

Florida Certificate of Product Approval #FL 1999

****WARNING**** READ AND FOLLOW ALL NOTES ON THIS DRAWING!
****IMPORTANT**** FURNISH THIS DRAWING TO ALL CONTRACTORS INCLUDING THE INSTALLERS

Trusses require extreme care in fabricating, handling, shipping, installing and bracing. Refer to and follow the latest edition of BCSI (Building Component Safety Information, by TPI and SBCA) for safety practices prior to performing these functions. Installers shall provide temporary bracing per BCSI. Unless noted otherwise, top chord shall have properly attached structural sheathing and bottom chord shall have a properly attached rigid ceiling. Locations shown for permanent lateral restraint of webs shall have bracing installed per BCSI sections B3, B7, or B10, as applicable. Apply plates to each face of truss and position as shown above and on the Joint Details, unless noted otherwise. Refer to drawings 160A-Z for standard plate positions. Refer to job's General Notes page for additional information.

Alpine, a division of ITW Building Components Group Inc. shall not be responsible for any deviation from this drawing, any failure to build the truss in conformance with ANSI/TPI 1, or for handling, shipping, installation and bracing of trusses. A seal on this drawing or cover page listing this drawing, indicates acceptance of professional engineering responsibility solely for the design shown. The suitability and use of this drawing for any structure is the responsibility of the Building Designer per ANSI/TPI 1 Sec.2.

For more information see these web sites: Alpine: alpineitw.com; TPI: tpinst.org; SBCA: sbcacomponents.com; ICC: iccsafe.org; AWC: awc.org

ALPINE AN ITW COMPANY
155 Harlem Ave
North Building, 4th Floor
Glenview, IL 60025

SEQN: 656840 SPEC	Ply: 1	Job Number: 22-7559	Cust: R 215 JRef:1Xff2150006 T5
FROM: CDM	Qty: 1	Judy Baughn	DrwNo: 131.22.0814.39027
		Truss Label: C11	KD / WHK 05/11/2022

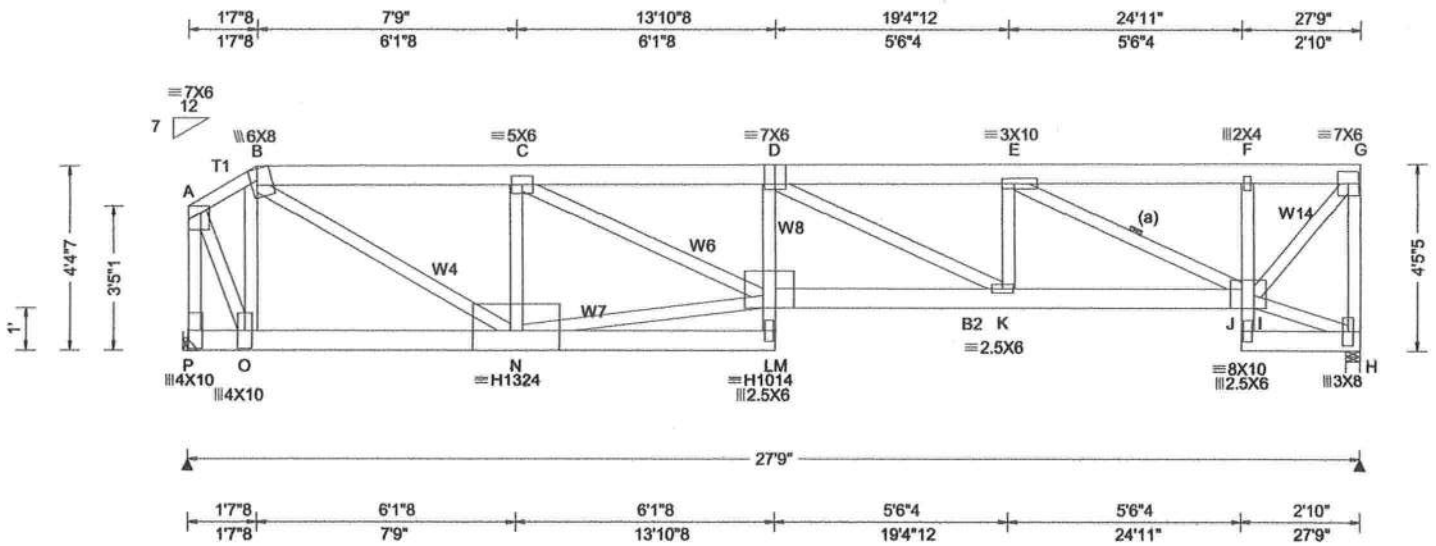

Loading Criteria (psf)

TCLL:	20.00
TCDL:	10.00
BCLL:	0.00
BCDL:	10.00
Des Ld:	40.00
NCBCLL:	10.00
Soffit:	2.00

Load Duration: 1.25
Spacing: 24.0 "

Wind Criteria
Wind Std: ASCE 7-16
Speed: 130 mph
Enclosure: Closed
Risk Category: II
EXP: C Kzt: NA
Mean Height: 15.00 ft
TCDL: 5.0 psf
BCDL: 5.0 psf
MWFRS Parallel Dist: 0 to h/2
C&C Dist a: 3.00 ft
Loc. from endwall: not in 4.50 ft
GCpi: 0.18
Wind Duration: 1.60

Snow Criteria (Pg,Pf in PSF)
Pg: NA Ct: NA CAT: NA
Pf: NA Ce: NA
Lu: NA Cs: NA
Snow Duration: NA

Building Code:
FBC 7th Ed. 2020 Res.
TPI Std: 2014
Rep Fac: Varies by Ld Case
FT/RT:20(0)/10(0)
Plate Type(s):
WAVE, HS

Defl/CSI Criteria

PP Deflection in	loc	L/defl	L/#
VERT(LL): 0.244	D	999	240
VERT(CL): 0.492	D	677	180
HORZ(LL): 0.087	H	-	-
HORZ(TL): 0.175	H	-	-

Creep Factor: 2.0
Max TC CSI: 0.693
Max BC CSI: 0.624
Max Web CSI: 0.938

VIEW Ver: 21.02.01.1214.12

▲ Maximum Reactions (lbs)

	Gravity			Non-Gravity		
Loc	R+	/ R-	/ Rh	/ Rw	/ U	/ RL
P	2528	/-	/-	/-	/611	/-
H	2499	/-	/-	/-	/498	/-

Wind reactions based on MWFRS
P Brg Wid = - Min Req = -
H Brg Wid = 4.0 Min Req = 2.9 (Truss)
Bearing H is a rigid surface.
Members not listed have forces less than 375#

Maximum Top Chord Forces Per Ply (lbs)

Chords	Tens.	Comp.	Chords	Tens.	Comp.
A - B	287	-1142	D - E	1045	-5322
B - C	891	-3896	E - F	467	-2324
C - D	1382	-6359	F - G	464	-2300

Maximum Bot Chord Forces Per Ply (lbs)

Chords	Tens.	Comp.	Chords	Tens.	Comp.
O - N	1081	-266	K - I	5235	-1035
L - K	6418	-1398			

Maximum Web Forces Per Ply (lbs)

Webs	Tens.	Comp.	Webs	Tens.	Comp.
A - P	702	-2796	D - K	403	-1247
A - O	2410	-598	K - E	953	-109
O - B	308	-1393	E - I	636	-3259
B - N	3346	-743	F - I	205	-501
N - C	532	-1799	I - G	3336	-673
N - L	3773	-870	G - H	504	-2438
C - L	2667	-525			

Lumber

Top chord: 2x6 SP #2; T1 2x4 SP #2;
Bot chord: 2x6 SP #2; B2 2x6 SP 2400f-2.0E;
Webs: 2x4 SP #3; W4,W6,W7,W8,W14 2x4 SP #2;

Bracing

(a) Continuous lateral restraint equally spaced on member.

Special Loads

——(Lumber Dur.Fac.=1.25 / Plate Dur.Fac.=1.25)
TC: From 63 plf at 0.00 to 63 plf at 1.62
TC: From 32 plf at 1.62 to 32 plf at 27.75
BC: From 10 plf at 0.00 to 10 plf at 27.75
TC: 188 lb Conc. Load at 7.81, 9.81,11.81,13.81 25.81
TC: 131 lb Conc. Load at 15.81,17.81,19.81,21.81 23.81
BC: 269 lb Conc. Load at 1.81, 3.81, 5.81
BC: 129 lb Conc. Load at 7.81, 9.81,11.81,13.81 25.81
BC: 155 lb Conc. Load at 15.81,17.81,19.81,21.81 23.81

Hangers / Ties

(J) Hanger Support Required, by others

Wind

Wind loads and reactions based on MWFRS.
End verticals not exposed to wind pressure.
Wind loading based on both gable and hip roof types.

Additional Notes

The overall height of this truss excluding overhang is 4-5-5.

WILLIAM H. KRICK
LICENSE
No. 70861
STATE OF FLORIDA
PROFESSIONAL ENGINEER

COA #0278
05/11/2022
Florida Certificate of Product Approval #FL 1999

****WARNING**** READ AND FOLLOW ALL NOTES ON THIS DRAWING!
****IMPORTANT**** FURNISH THIS DRAWING TO ALL CONTRACTORS INCLUDING THE INSTALLERS

Trusses require extreme care in fabricating, handling, shipping, installing and bracing. Refer to and follow the latest edition of BCSI (Building Component Safety Information, by TPI and SBCA) for safety practices prior to performing these functions. Installers shall provide temporary bracing per BCSI. Unless noted otherwise, top chord shall have properly attached structural sheathing and bottom chord shall have a properly attached rigid ceiling. Locations shown for permanent lateral restraint of webs shall have bracing installed per BCSI sections B3, B7, or B10, as applicable. Apply plates to each face of truss and position as shown above and on the Joint Details, unless noted otherwise. Refer to drawings 160A-Z for standard plate positions. Refer to job's General Notes page for additional information.

Alpine, a division of ITW Building Components Group Inc. shall not be responsible for any deviation from this drawing, any failure to build the truss in conformance with ANSI/TPI 1, or for handling, shipping, installation and bracing of trusses. A seal on this drawing or cover page listing this drawing, indicates acceptance of professional engineering responsibility solely for the design shown. The suitability and use of this drawing for any structure is the responsibility of the Building Designer per ANSI/TPI 1 Sec.2.

For more information see these web sites: Alpine: alpineitw.com; TPI: tpinst.org; SBCA: sbcacomponents.com; ICC: iccsafe.org; AWC: awc.org

ALPINE
AN ITW COMPANY
155 Harlem Ave
North Building, 4th Floor
Glenview, IL 60025

SEQN: 656922 GABL FROM: CDM	Ply: 1 Qty: 1	**Job Number:** 22-7559 Judy Baughn **Truss Label:** D01	Cust: R 215 JRef: 1Xff2150006 T13 DrwNo: 131.22.0814.27277 KD / WHK 05/11/2022

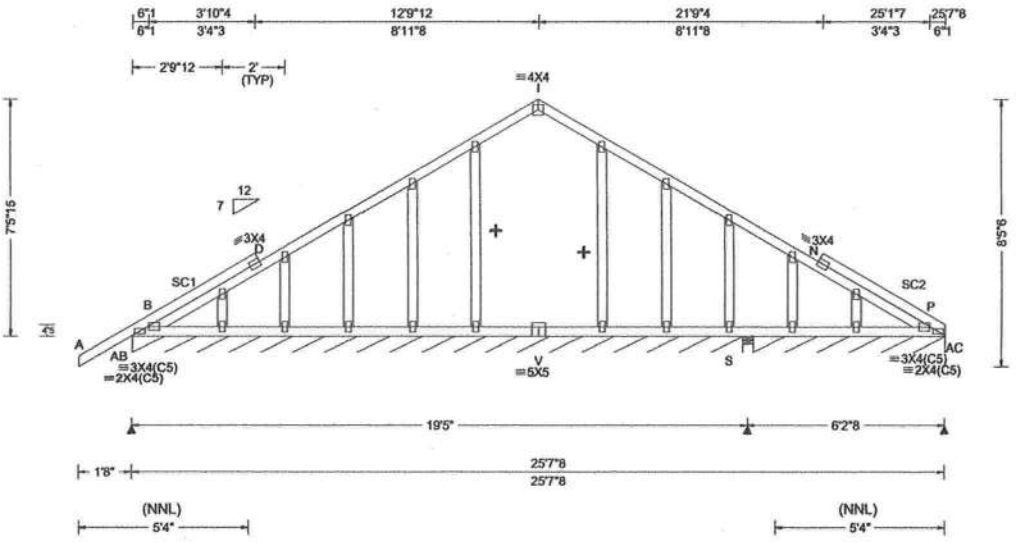

Loading Criteria (psf)	**Wind Criteria**	**Snow Criteria** (Pg,Pf in PSF)	**Defl/CSI Criteria**
TCLL: 20.00	Wind Std: ASCE 7-16	Pg: NA Ct: NA CAT: NA	PP Deflection in loc L/defl L/#
TCDL: 10.00	Speed: 130 mph	Pf: NA Ce: NA	VERT(LL): 0.005 I 999 240
BCLL: 0.00	Enclosure: Closed	Lu: NA Cs: NA	VERT(CL): 0.008 I 999 180
BCDL: 10.00	Risk Category: II	Snow Duration: NA	HORZ(LL): 0.006 N - -
Des Ld: 40.00	EXP: C Kzt: NA		HORZ(TL): 0.007 N - -
NCBCLL: 10.00	Mean Height: 15.00 ft	Building Code:	Creep Factor: 2.0
Soffit: 2.00	TCDL: 5.0 psf	FBC 7th Ed. 2020 Res.	Max TC CSI: 0.318
Load Duration: 1.25	BCDL: 5.0 psf	TPI Std: 2014	Max BC CSI: 0.066
Spacing: 24.0 "	MWFRS Parallel Dist: 0 to h/2	Rep Fac: Yes	Max Web CSI: 0.108
	C&C Dist a: 3.00 ft	FT/RT:20(0)/10(0)	
	Loc. from endwall: Any	Plate Type(s):	
	GCpi: 0.18	WAVE	VIEW Ver: 21.02.01.1214.12
	Wind Duration: 1.60		

▲ Maximum Reactions (lbs), or *=PLF

Loc	Gravity R+	Gravity / R-	Gravity / Rh	Non-Gravity / Rw	Non-Gravity / U	Non-Gravity / RL
AB	*88	/-	/-	/50	/17	/11
S	30	/-	/-	/15	/-	/-
AC	*88	/-	/-	/51	/7	/-

Wind reactions based on MWFRS
AB Brg Wid = 231 Min Req = -
S Brg Wid = 4.0 Min Req = 1.5 (Truss)
AC Brg Wid = 72.5 Min Req = -
Bearings AB, S, & S are a rigid surface.
Members not listed have forces less than 375#

Maximum Bot Chord Forces Per Ply (lbs)

Chords	Tens.	Comp.
V - P	438	-138

Lumber

Top chord: 2x4 SP #2;
Bot chord: 2x4 SP #2;
Webs: 2x4 SP #3;
Stack Chord: SC1 2x4 SP #2;
Stack Chord: SC2 2x4 SP #2;

+ Member to be laterally braced for horizontal wind loads. bracing system to be desiged and furnished by others.

Plating Notes

All plates are 2X4 except as noted.

Loading

Gable end supports 8" max rake overhang. Top chord must not be cut or notched.

Wind

Wind loads based on MWFRS with additional C&C member design.

Wind loading based on both gable and hip roof types.

Additional Notes

See DWGS A14015ENC160118 & GBLLETIN0118 for gable wind bracing and other requirements.

Stacked top chord must NOT be notched or cut in area (NNL). Dropped top chord braced at 24" oc intervals. Attach stacked top chord (SC) to dropped top chord in notchable area using 3x4 tie-plates 24" oc. Center plate on stacked/dropped chord interface, plate length perpendicular to chord length. Splice top chord in notchable area using 3x6.

The overall height of this truss excluding overhang is 7-5-15.

WILLIAM H. KRICK
LICENSE
No. 70861
STATE OF FLORIDA
PROFESSIONAL ENGINEER

COA #0278
Florida Certificate of Product Approval #FL 1999
05/11/2022

****WARNING**** READ AND FOLLOW ALL NOTES ON THIS DRAWING!
****IMPORTANT**** FURNISH THIS DRAWING TO ALL CONTRACTORS INCLUDING THE INSTALLERS

Trusses require extreme care in fabricating, handling, shipping, installing and bracing. Refer to and follow the latest edition of BCSI (Building Component Safety Information, by TPI and SBCA) for safety practices prior to performing these functions. Installers shall provide temporary bracing per BCSI. Unless noted otherwise, top chord shall have properly attached structural sheathing and bottom chord shall have a properly attached rigid ceiling. Locations shown for permanent lateral restraint of webs shall have bracing installed per BCSI sections B3, B7, or B10, as applicable. Apply plates to each face of truss and position as shown above and on the Joint Details, unless noted otherwise. Refer to drawings 160A-Z for standard plate positions. Refer to job's General Notes page for additional information.

Alpine, a division of ITW Building Components Group Inc. shall not be responsible for any deviation from this drawing, any failure to build the truss in conformance with ANSI/TPI 1, or for handling, shipping, installation and bracing of trusses. A seal on this drawing or cover page listing this drawing, indicates acceptance of professional engineering responsibility solely for the design shown. The suitability and use of this drawing for any structure is the responsibility of the Building Designer per ANSI/TPI 1 Sec.2.

For more information see these web sites: Alpine: alpineitw.com; TPI: tpinst.org; SBCA: sbcacomponents.com; ICC: iccsafe.org; AWC: awc.org

ALPINE
AN ITW COMPANY
155 Harlem Ave
North Building, 4th Floor
Glenview, IL 60025

SEQN: 657717 COMN FROM: CDM	Ply: 1 Qty: 1	**Job Number:** 22-7559 Judy Baughn **Truss Label:** D02	Cust: R 215 JRef: 1Xff2150006 T41 DrwNo: 131.22.0814.14407 KD / WHK 05/11/2022

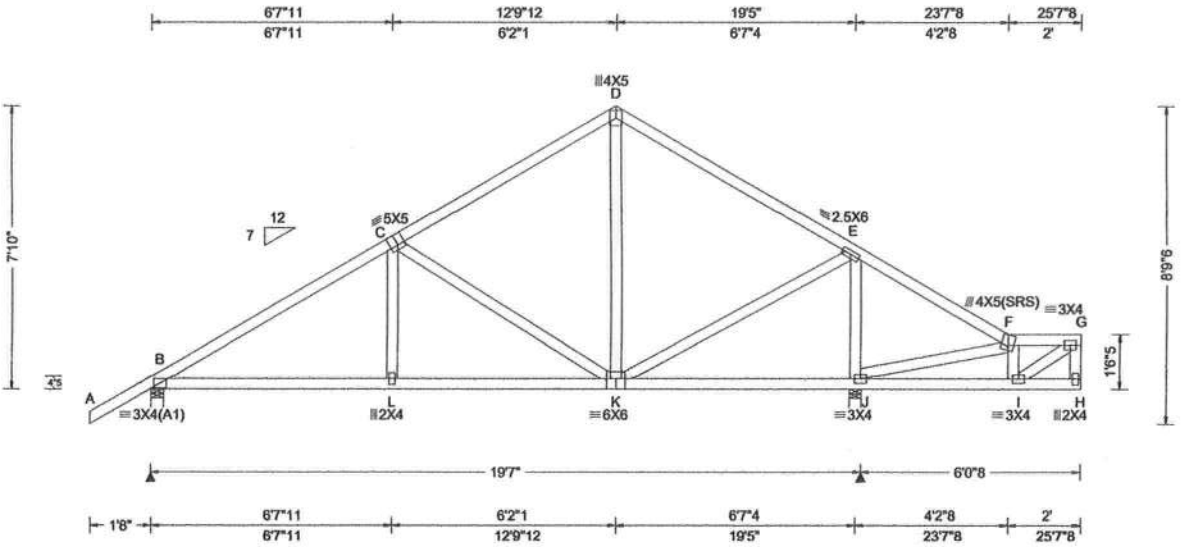

Loading Criteria (psf)	**Wind Criteria**	**Snow Criteria** (Pg,Pf in PSF)	**Defl/CSI Criteria**
TCLL: 20.00 TCDL: 10.00 BCLL: 0.00 BCDL: 10.00 Des Ld: 40.00 NCBCLL: 10.00 Soffit: 2.00 Load Duration: 1.25 Spacing: 24.0 "	Wind Std: ASCE 7-16 Speed: 130 mph Enclosure: Closed Risk Category: II EXP: C Kzt: NA Mean Height: 15.00 ft TCDL: 5.0 psf BCDL: 5.0 psf MWFRS Parallel Dist: 0 to h/2 C&C Dist a: 3.00 ft Loc. from endwall: Any GCpi: 0.18 Wind Duration: 1.60	Pg: NA Ct: NA CAT: NA Pf: NA Ce: NA Lu: NA Cs: NA Snow Duration: NA Building Code: FBC 7th Ed. 2020 Res. TPI Std: 2014 Rep Fac: Yes FT/RT:20(0)/10(0) Plate Type(s): WAVE	PP Deflection in loc L/defl L/# VERT(LL): 0.023 L 999 240 VERT(CL): 0.049 L 999 180 HORZ(LL): 0.008 C - - HORZ(TL): 0.017 K - - Creep Factor: 2.0 Max TC CSI: 0.486 Max BC CSI: 0.413 Max Web CSI: 0.530 VIEW Ver: 21.02.01.1214.12

▲ Maximum Reactions (lbs)

	Gravity			Non-Gravity		
Loc	R+	/ R-	/ Rh	/ Rw	/ U	/ RL
B	897	/-	/-	/557	/156	/211
J	1384	/-	/-	/891	/184	/-

Wind reactions based on MWFRS
B Brg Wid = 4.0 Min Req = 1.5 (Truss)
J Brg Wid = 4.0 Min Req = 1.5 (Truss)
Bearings B & J are a rigid surface.
Members not listed have forces less than 375#

Maximum Top Chord Forces Per Ply (lbs)

Chords	Tens.	Comp.	Chords	Tens.	Comp.
B - C	295	-1104	D - E	250	-604
C - D	249	-600	E - F	517	-180

Maximum Bot Chord Forces Per Ply (lbs)

Chords	Tens.	Comp.	Chords	Tens.	Comp.
B - L	870	-213	L - K	868	-214

Maximum Web Forces Per Ply (lbs)

Webs	Tens.	Comp.	Webs	Tens.	Comp.
C - K	247	-522	E - J	449	-1182
K - E	757	-140			

Lumber

Top chord: 2x4 SP #2;
Bot chord: 2x4 SP #2;
Webs: 2x4 SP #3;

Purlins

In lieu of structural panels use purlins to brace all flat TC @ 24" oc.

Wind

Wind loads based on MWFRS with additional C&C member design.

Right end vertical not exposed to wind pressure.

Right cantilever is exposed to wind

Wind loading based on both gable and hip roof types.

Additional Notes

The overall height of this truss excluding overhang is 7-10-0.

WILLIAM H. KRICK
LICENSE
No. 70861
STATE OF FLORIDA
PROFESSIONAL ENGINEER

COA #0278

05/11/2022

Florida Certificate of Product Approval #FL 1999

****WARNING**** READ AND FOLLOW ALL NOTES ON THIS DRAWING!
****IMPORTANT**** FURNISH THIS DRAWING TO ALL CONTRACTORS INCLUDING THE INSTALLERS

Trusses require extreme care in fabricating, handling, shipping, installing and bracing. Refer to and follow the latest edition of BCSI (Building Component Safety Information, by TPI and SBCA) for safety practices prior to performing these functions. Installers shall provide temporary bracing per BCSI. Unless noted otherwise, top chord shall have properly attached structural sheathing and bottom chord shall have a properly attached rigid ceiling. Locations shown for permanent lateral restraint of webs shall have bracing installed per BCSI sections B3, B7, or B10, as applicable. Apply plates to each face of truss and position as shown above and on the Joint Details, unless noted otherwise. Refer to drawings 160A-Z for standard plate positions. Refer to job's General Notes page for additional information.

Alpine, a division of ITW Building Components Group Inc. shall not be responsible for any deviation from this drawing, any failure to build the truss in conformance with ANSI/TPI 1, or for handling, shipping, installation and bracing of trusses. A seal on this drawing or cover page listing this drawing, indicates acceptance of professional engineering responsibility solely for the design shown. The suitability and use of this drawing for any structure is the responsibility of the Building Designer per ANSI/TPI 1 Sec.2.

For more information see these web sites: Alpine: alpineitw.com; TPI: tpinst.org; SBCA: sbcacomponents.com; ICC: iccsafe.org; AWC: awc.org

ALPINE
AN ITW COMPANY
155 Harlem Ave
North Building, 4th Floor
Glenview, IL 60025

SEQN: 657720 COMN	Ply: 1	**Job Number:** 22-7559	Cust: R 215 JRef: 1Xff2150006 T39
FROM: CDM	Qty: 1	Judy Baughn	DrwNo: 131.22.0814.05043
		Truss Label: D03	KD / WHK 05/11/2022

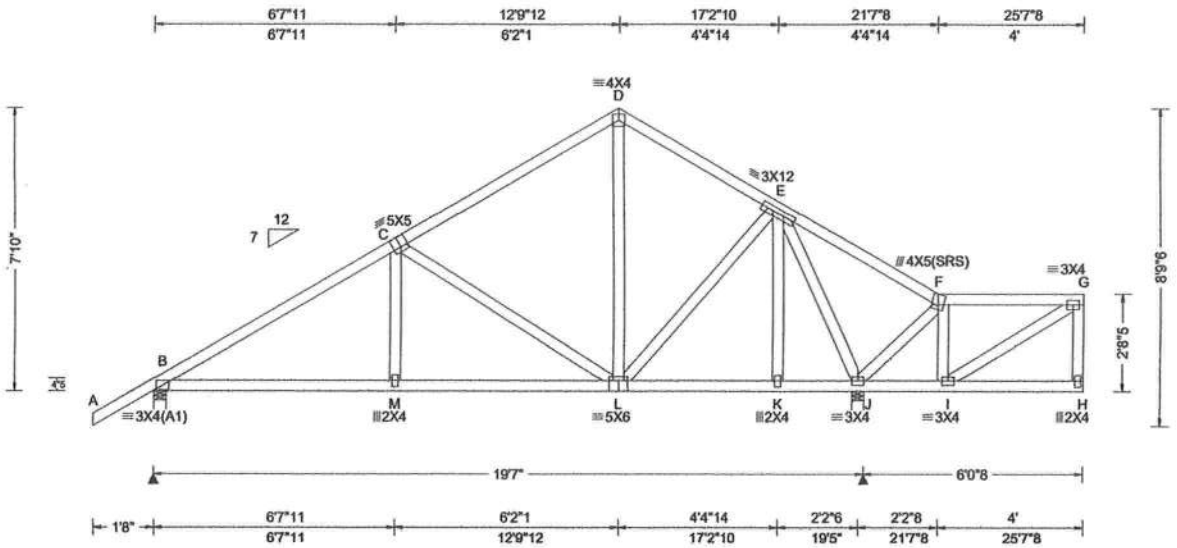

Loading Criteria (psf)

TCLL:	20.00
TCDL:	10.00
BCLL:	0.00
BCDL:	10.00
Des Ld:	40.00
NCBCLL:	10.00
Soffit:	2.00

Load Duration: 1.25
Spacing: 24.0 "

Wind Criteria
Wind Std: ASCE 7-16
Speed: 130 mph
Enclosure: Closed
Risk Category: II
EXP: C Kzt: NA
Mean Height: 15.00 ft
TCDL: 5.0 psf
BCDL: 5.0 psf
MWFRS Parallel Dist: 0 to h/2
C&C Dist a: 3.00 ft
Loc. from endwall: not in 4.50 ft
GCpi: 0.18
Wind Duration: 1.60

Snow Criteria (Pg,Pf in PSF)
Pg: NA Ct: NA CAT: NA
Pf: NA Ce: NA
Lu: NA Cs: NA
Snow Duration: NA

Building Code:
FBC 7th Ed. 2020 Res.
TPI Std: 2014
Rep Fac: Yes
FT/RT:20(0)/10(0)
Plate Type(s):
WAVE

Defl/CSI Criteria

PP Deflection in	loc	L/defl	L/#
VERT(LL): 0.022	M	999	240
VERT(CL): 0.048	M	999	180
HORZ(LL): 0.009	G	-	-
HORZ(TL): 0.019	G	-	-

Creep Factor: 2.0
Max TC CSI: 0.435
Max BC CSI: 0.421
Max Web CSI: 0.663

VIEW Ver: 21.02.01.1214.12

▲ Maximum Reactions (lbs)

	Gravity			Non-Gravity		
Loc	R+	/ R-	/ Rh	/ Rw	/ U	/ RL
B	889	/-	/-	/551	/150	/211
J	1395	/-	/-	/864	/193	/-

Wind reactions based on MWFRS
B Brg Wid = 4.0 Min Req = 1.5 (Truss)
J Brg Wid = 4.0 Min Req = 1.5 (Truss)
Bearings B & J are a rigid surface.
Members not listed have forces less than 375#

Maximum Top Chord Forces Per Ply (lbs)

Chords	Tens.	Comp.	Chords	Tens.	Comp.
B - C	183	-1091	D - E	180	-540
C - D	171	-578	E - F	580	-237

Maximum Bot Chord Forces Per Ply (lbs)

Chords	Tens.	Comp.	Chords	Tens.	Comp.
B - M	861	-157	M - L	858	-158

Maximum Web Forces Per Ply (lbs)

Webs	Tens.	Comp.	Webs	Tens.	Comp.
C - L	184	-538	E - J	322	-1203
L - E	451	-92			

Lumber
Top chord: 2x4 SP #2;
Bot chord: 2x4 SP #2;
Webs: 2x4 SP #3;

Purlins
In lieu of structural panels use purlins to brace all flat TC @ 24" oc.

Wind
Wind loads based on MWFRS with additional C&C member design.
Right end vertical not exposed to wind pressure.
Right cantilever is exposed to wind
Wind loading based on both gable and hip roof types.

Additional Notes
The overall height of this truss excluding overhang is 7-10-0.

WILLIAM H. KRICK
LICENSE
No. 70861
STATE OF FLORIDA
PROFESSIONAL ENGINEER

COA #0278
05/11/2022
Florida Certificate of Product Approval #FL 1999

****WARNING**** READ AND FOLLOW ALL NOTES ON THIS DRAWING!
****IMPORTANT**** FURNISH THIS DRAWING TO ALL CONTRACTORS INCLUDING THE INSTALLERS

Trusses require extreme care in fabricating, handling, shipping, installing and bracing. Refer to and follow the latest edition of BCSI (Building Component Safety Information, by TPI and SBCA) for safety practices prior to performing these functions. Installers shall provide temporary bracing per BCSI. Unless noted otherwise, top chord shall have properly attached structural sheathing and bottom chord shall have a properly attached rigid ceiling. Locations shown for permanent lateral restraint of webs shall have bracing installed per BCSI sections B3, B7, or B10, as applicable. Apply plates to each face of truss and position as shown above and on the Joint Details, unless noted otherwise. Refer to drawings 160A-Z for standard plate positions. Refer to job's General Notes page for additional information.

Alpine, a division of ITW Building Components Group Inc. shall not be responsible for any deviation from this drawing, any failure to build the truss in conformance with ANSI/TPI 1, or for handling, shipping, installation and bracing of trusses. A seal on this drawing or cover page listing this drawing, indicates acceptance of professional engineering responsibility solely for the design shown. The suitability and use of this drawing for any structure is the responsibility of the Building Designer per ANSI/TPI 1 Sec.2.

For more information see these web sites: Alpine: alpineitw.com; TPI: tpinst.org; SBCA: sbcacomponents.com; ICC: iccsafe.org; AWC: awc.org

ALPINE
AN ITW COMPANY
155 Harlem Ave
North Building, 4th Floor
Glenview, IL 60025

SEQN: 657723 COMN FROM: CDM	Ply: 1 Qty: 1	**Job Number:** 22-7559 Judy Baughn **Truss Label:** D04	Cust: R 215 JRef: 1Xff2150006 T48 DrwNo: 131.22.0814.03123 KD / WHK 05/11/2022

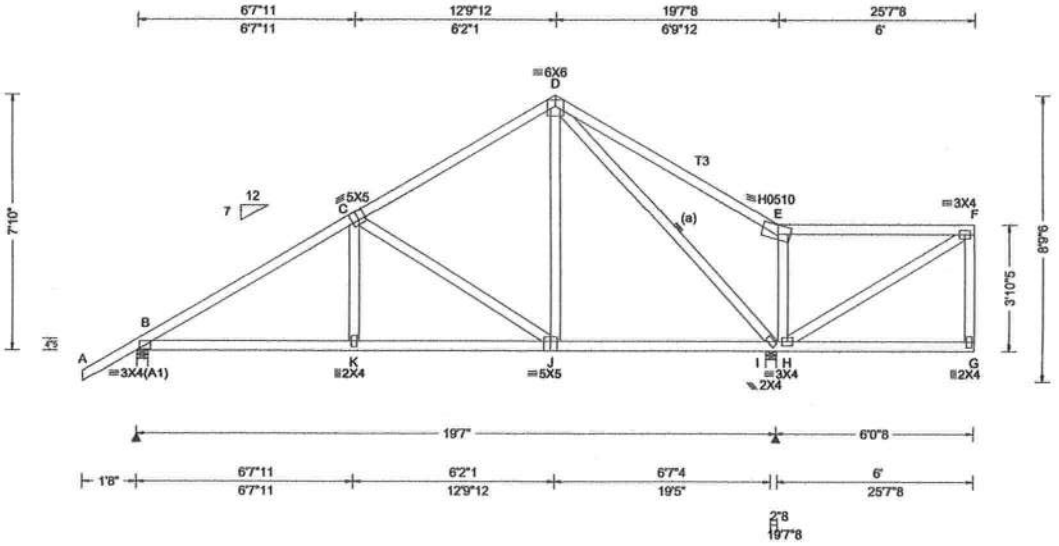

Loading Criteria (psf)	**Wind Criteria**	**Snow Criteria** (Pg,Pf in PSF)	**Defl/CSI Criteria**
TCLL: 20.00 TCDL: 10.00 BCLL: 0.00 BCDL: 10.00 Des Ld: 40.00 NCBCLL: 10.00 Soffit: 2.00 Load Duration: 1.25 Spacing: 24.0 "	Wind Std: ASCE 7-16 Speed: 130 mph Enclosure: Closed Risk Category: II EXP: C Kzt: NA Mean Height: 15.00 ft TCDL: 5.0 psf BCDL: 5.0 psf MWFRS Parallel Dist: h/2 to h C&C Dist a: 3.00 ft Loc. from endwall: not in 4.50 ft GCpi: 0.18 Wind Duration: 1.60	Pg: NA Ct: NA CAT: NA Pf: NA Ce: NA Lu: NA Cs: NA Snow Duration: NA Building Code: FBC 7th Ed. 2020 Res. TPI Std: 2014 Rep Fac: Yes FT/RT:20(0)/10(0) Plate Type(s): WAVE, HS	PP Deflection in loc L/defl L/# VERT(LL): 0.029 K 999 240 VERT(CL): 0.053 K 999 180 HORZ(LL): 0.011 I - - HORZ(TL): 0.021 I - - Creep Factor: 2.0 Max TC CSI: 0.769 Max BC CSI: 0.561 Max Web CSI: 0.576 VIEW Ver: 21.02.01.1214.12

▲ Maximum Reactions (lbs)

	Gravity			Non-Gravity		
Loc	R+	/ R-	/ Rh	/ Rw	/ U	/ RL
B	889	/-	/-	/552	/143	/211
I	1592	/-	/-	/834	/230	/-

Wind reactions based on MWFRS
B Brg Wid = 4.0 Min Req = 1.5 (Truss)
I Brg Wid = 4.0 Min Req = 1.5 (Truss)
Bearings B & I are a rigid surface.
Members not listed have forces less than 375#

Maximum Top Chord Forces Per Ply (lbs)

Chords	Tens.	Comp.	Chords	Tens.	Comp.
B - C	174	-1097	D - E	475	-217
C - D	153	-577			

Maximum Bot Chord Forces Per Ply (lbs)

Chords	Tens.	Comp.	Chords	Tens.	Comp.
B - K	868	-191	J - I	389	-73
K - J	866	-192			

Maximum Web Forces Per Ply (lbs)

Webs	Tens.	Comp.	Webs	Tens.	Comp.
C - J	206	-568	E - H	302	-468
J - D	463	-40	H - F	262	-436
D - I	237	-1021			

Lumber

Top chord: 2x4 SP #2; T3 2x4 SP M-31;
Bot chord: 2x4 SP #2;
Webs: 2x4 SP #3;

Bracing

(a) Continuous lateral restraint equally spaced on member.

Purlins

In lieu of structural panels use purlins to brace all flat TC @ 24" oc.

Wind

Wind loads based on MWFRS with additional C&C member design.

Right end vertical not exposed to wind pressure.

Right cantilever is exposed to wind

Wind loading based on both gable and hip roof types.

Additional Notes

The overall height of this truss excluding overhang is 7-10-0.

WILLIAM H. KRICK
LICENSE
No. 70861
STATE OF FLORIDA
PROFESSIONAL ENGINEER

COA #0278

05/11/2022

Florida Certificate of Product Approval #FL 1999

****WARNING**** READ AND FOLLOW ALL NOTES ON THIS DRAWING!
****IMPORTANT**** FURNISH THIS DRAWING TO ALL CONTRACTORS INCLUDING THE INSTALLERS

Trusses require extreme care in fabricating, handling, shipping, installing and bracing. Refer to and follow the latest edition of BCSI (Building Component Safety Information, by TPI and SBCA) for safety practices prior to performing these functions. Installers shall provide temporary bracing per BCSI. Unless noted otherwise, top chord shall have properly attached structural sheathing and bottom chord shall have a properly attached rigid ceiling. Locations shown for permanent lateral restraint of webs shall have bracing installed per BCSI sections B3, B7, or B10, as applicable. Apply plates to each face of truss and position as shown above and on the Joint Details, unless noted otherwise. Refer to drawings 160A-Z for standard plate positions. Refer to job's General Notes page for additional information.

Alpine, a division of ITW Building Components Group Inc. shall not be responsible for any deviation from this drawing, any failure to build the truss in conformance with ANSI/TPI 1, or for handling, shipping, installation and bracing of trusses. A seal on this drawing or cover page listing this drawing, indicates acceptance of professional engineering responsibility solely for the design shown. The suitability and use of this drawing for any structure is the responsibility of the Building Designer per ANSI/TPI 1 Sec.2.

For more information see these web sites: Alpine: alpineitw.com; TPI: tpinst.org; SBCA: sbcacomponents.com; ICC: iccsafe.org; AWC: awc.org

ALPINE
AN ITW COMPANY
155 Harlem Ave
North Building, 4th Floor
Glenview, IL 60025

SEQN: 657726 COMN FROM: CDM	Ply: 1 Qty: 1	**Job Number:** 22-7559 Judy Baughn **Truss Label:** D05	Cust: R 215 JRef: 1Xff2150006 T49 DrwNo: 131.22.0814.01340 KD / WHK 05/11/2022

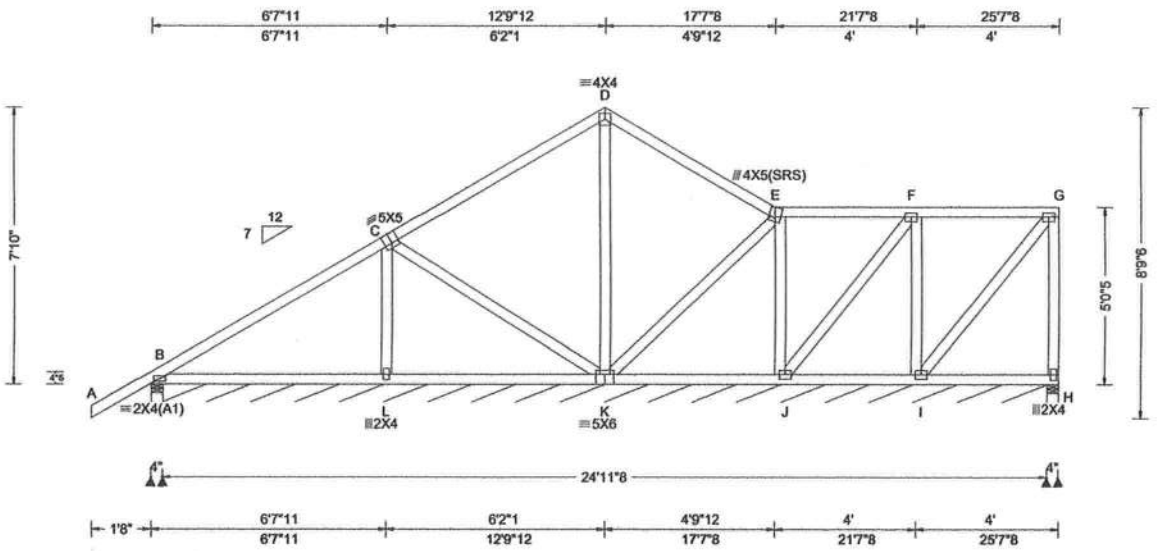

Loading Criteria (psf)

TCLL:	20.00
TCDL:	10.00
BCLL:	0.00
BCDL:	10.00
Des Ld:	40.00
NCBCLL:	10.00
Soffit:	2.00

Load Duration: 1.25
Spacing: 24.0 "

Wind Criteria
Wind Std: ASCE 7-16
Speed: 130 mph
Enclosure: Closed
Risk Category: II
EXP: C Kzt: NA
Mean Height: 15.00 ft
TCDL: 5.0 psf
BCDL: 5.0 psf
MWFRS Parallel Dist: h/2 to h
C&C Dist a: 3.00 ft
Loc. from endwall: not in 9.00 ft
GCpi: 0.18
Wind Duration: 1.60

Snow Criteria (Pg,Pf in PSF)
Pg: NA Ct: NA CAT: NA
Pf: NA Ce: NA
Lu: NA Cs: NA
Snow Duration: NA

Building Code:
FBC 7th Ed. 2020 Res.
TPI Std: 2014
Rep Fac: Yes
FT/RT:20(0)/10(0)
Plate Type(s):
WAVE

Defl/CSI Criteria

PP Deflection in	loc	L/defl	L/#
VERT(LL): 0.006	B	999	240
VERT(CL): 0.013	B	999	180
HORZ(LL): 0.005	B	-	-
HORZ(TL): 0.009	B	-	-

Creep Factor: 2.0
Max TC CSI: 0.526
Max BC CSI: 0.336
Max Web CSI: 0.293

VIEW Ver: 21.02.01.1214.12

▲Maximum Reactions (lbs), or *=PLF

	Gravity			Non-Gravity		
Loc	R+	/ R-	/ Rh	/ Rw	/ U	/ RL
B	442	/-	/-	/276	/48	/211
B*	66	/-	/-	/38	/13	/-
H	153	/-	/-	/78	/29	/-

Wind reactions based on MWFRS
B Brg Wid = 4.0 Min Req = 1.5 (Truss)
B Brg Wid = 299 Min Req = -
H Brg Wid = 4.0 Min Req = 1.5 (Truss)
Bearings B, B, & H are a rigid surface.
Members not listed have forces less than 375#

Lumber

Top chord: 2x4 SP #2;
Bot chord: 2x4 SP #2;
Webs: 2x4 SP #3;

Plating Notes

All plates are 3X4 except as noted.

Purlins

In lieu of structural panels use purlins to brace all flat TC @ 24" oc.

Wind

Wind loads based on MWFRS with additional C&C member design.

Right end vertical not exposed to wind pressure.

Wind loading based on both gable and hip roof types.

Additional Notes

The overall height of this truss excluding overhang is 7-10-0.

WILLIAM H. KRICK
LICENSE
No. 70861
STATE OF FLORIDA
PROFESSIONAL ENGINEER

COA #0278
05/11/2022
Florida Certificate of Product Approval #FL 1999

****WARNING**** READ AND FOLLOW ALL NOTES ON THIS DRAWING!
****IMPORTANT**** FURNISH THIS DRAWING TO ALL CONTRACTORS INCLUDING THE INSTALLERS

Trusses require extreme care in fabricating, handling, shipping, installing and bracing. Refer to and follow the latest edition of BCSI (Building Component Safety Information, by TPI and SBCA) for safety practices prior to performing these functions. Installers shall provide temporary bracing per BCSI. Unless noted otherwise, top chord shall have properly attached structural sheathing and bottom chord shall have a properly attached rigid ceiling. Locations shown for permanent lateral restraint of webs shall have bracing installed per BCSI sections B3, B7, or B10, as applicable. Apply plates to each face of truss and position as shown above and on the Joint Details, unless noted otherwise. Refer to drawings 160A-Z for standard plate positions. Refer to job's General Notes page for additional information.

Alpine, a division of ITW Building Components Group Inc. shall not be responsible for any deviation from this drawing, any failure to build the truss in conformance with ANSI/TPI 1, or for handling, shipping, installation and bracing of trusses. A seal on this drawing or cover page listing this drawing, indicates acceptance of professional engineering responsibility solely for the design shown. The suitability and use of this drawing for any structure is the responsibility of the Building Designer per ANSI/TPI 1 Sec.2.

For more information see these web sites: Alpine: alpineitw.com; TPI: tpinst.org; SBCA: sbcacomponents.com; ICC: iccsafe.org; AWC: awc.org

ALPINE
AN ITW COMPANY
155 Harlem Ave
North Building, 4th Floor
Glenview, IL 60025

SEQN: 657729 COMN FROM: CDM	Ply: 1 Qty: 2	**Job Number:** 22-7559 Judy Baughn **Truss Label:** D06	Cust: R 215 JRef: 1Xff2150006 T43 DrwNo: 131.22.0813.59597 KD / WHK 05/11/2022

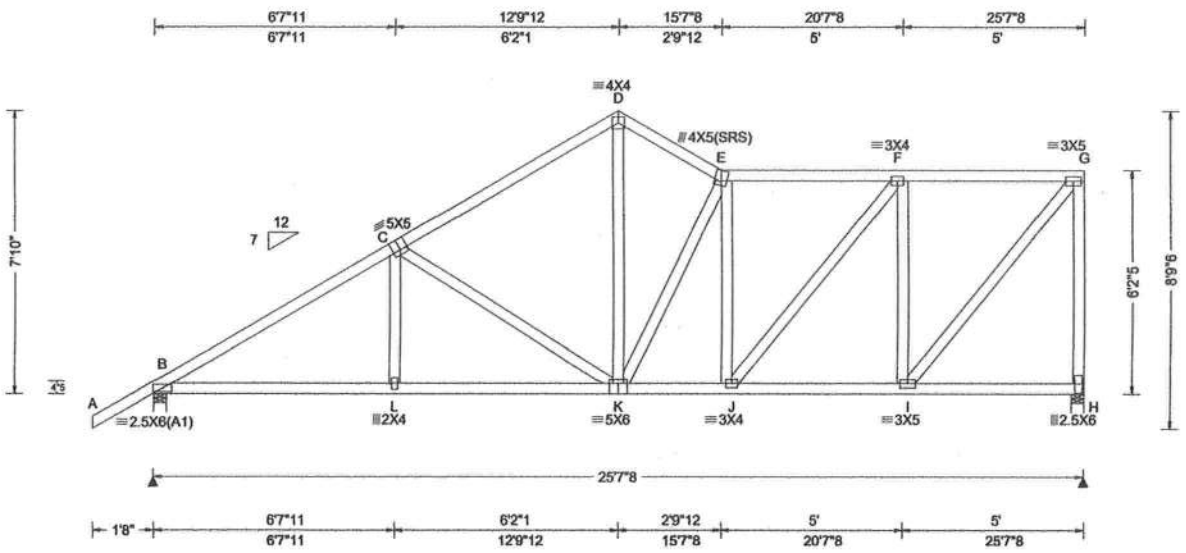

Loading Criteria (psf)	Wind Criteria	Snow Criteria (Pg,Pf in PSF)	Defl/CSI Criteria
TCLL: 20.00 TCDL: 10.00 BCLL: 0.00 BCDL: 10.00 Des Ld: 40.00 NCBCLL: 10.00 Soffit: 2.00 Load Duration: 1.25 Spacing: 24.0 "	Wind Std: ASCE 7-16 Speed: 130 mph Enclosure: Closed Risk Category: II EXP: C Kzt: NA Mean Height: 15.00 ft TCDL: 5.0 psf BCDL: 5.0 psf MWFRS Parallel Dist: h/2 to h C&C Dist a: 3.00 ft Loc. from endwall: not in 9.00 ft GCpi: 0.18 Wind Duration: 1.60	Pg: NA Ct: NA CAT: NA Pf: NA Ce: NA Lu: NA Cs: NA Snow Duration: NA Building Code: FBC 7th Ed. 2020 Res. TPI Std: 2014 Rep Fac: Yes FT/RT:20(0)/10(0) Plate Type(s): WAVE	PP Deflection in loc L/defl L/# VERT(LL): 0.054 K 999 240 VERT(CL): 0.111 K 999 180 HORZ(LL): 0.019 C - - HORZ(TL): 0.040 C - - Creep Factor: 2.0 Max TC CSI: 0.421 Max BC CSI: 0.491 Max Web CSI: 0.692 VIEW Ver: 21.02.01.1214.12

▲ Maximum Reactions (lbs)

	Gravity			Non-Gravity		
Loc	R+	/ R-	/ Rh	/ Rw	/ U	/ RL
B	1189	/-	/-	/740	/183	/234
H	1055	/-	/-	/571	/210	/-

Wind reactions based on MWFRS
B Brg Wid = 4.0 Min Req = 1.5 (Truss)
H Brg Wid = 4.0 Min Req = 1.5 (Truss)
Bearings B & H are a rigid surface.
Members not listed have forces less than 375#

Maximum Top Chord Forces Per Ply (lbs)

Chords	Tens.	Comp.	Chords	Tens.	Comp.
B - C	398	-1663	E - F	429	-1076
C - D	390	-1160	F - G	337	-731
D - E	411	-1083			

Maximum Bot Chord Forces Per Ply (lbs)

Chords	Tens.	Comp.	Chords	Tens.	Comp.
B - L	1352	-470	K - J	1092	-434
L - K	1350	-471	J - I	770	-360

Maximum Web Forces Per Ply (lbs)

Webs	Tens.	Comp.	Webs	Tens.	Comp.
C - K	176	-521	F - I	468	-775
D - K	761	-277	I - G	1151	-531
K - E	276	-418	G - H	536	-1016
J - F	501	-111			

Lumber

Top chord: 2x4 SP #2;
Bot chord: 2x4 SP #2;
Webs: 2x4 SP #3;

Purlins

In lieu of structural panels use purlins to brace all flat TC @ 24" oc.

Wind

Wind loads based on MWFRS with additional C&C member design.

Right end vertical not exposed to wind pressure.

Wind loading based on both gable and hip roof types.

Additional Notes

The overall height of this truss excluding overhang is 7-10-0.

WILLIAM H. KRICK
LICENSE
No. 70861
STATE OF FLORIDA
PROFESSIONAL ENGINEER

COA #0278
05/11/2022
Florida Certificate of Product Approval #FL 1999

****WARNING**** READ AND FOLLOW ALL NOTES ON THIS DRAWING!
****IMPORTANT**** FURNISH THIS DRAWING TO ALL CONTRACTORS INCLUDING THE INSTALLERS

Trusses require extreme care in fabricating, handling, shipping, installing and bracing. Refer to and follow the latest edition of BCSI (Building Component Safety Information, by TPI and SBCA) for safety practices prior to performing these functions. Installers shall provide temporary bracing per BCSI. Unless noted otherwise, top chord shall have properly attached structural sheathing and bottom chord shall have a properly attached rigid ceiling. Locations shown for permanent lateral restraint of webs shall have bracing installed per BCSI sections B3, B7, or B10, as applicable. Apply plates to each face of truss and position as shown above and on the Joint Details, unless noted otherwise. Refer to drawings 160A-Z for standard plate positions. Refer to job's General Notes page for additional information.

Alpine, a division of ITW Building Components Group Inc. shall not be responsible for any deviation from this drawing, any failure to build the truss in conformance with ANSI/TPI 1, or for handling, shipping, installation and bracing of trusses. A seal on this drawing or cover page listing this drawing, indicates acceptance of professional engineering responsibility solely for the design shown. The suitability and use of this drawing for any structure is the responsibility of the Building Designer per ANSI/TPI 1 Sec.2.

For more information see these web sites: Alpine: alpineitw.com; TPI: tpinst.org; SBCA: sbcacomponents.com; ICC: iccsafe.org; AWC: awc.org

ALPINE
AN ITW COMPANY
155 Harlem Ave
North Building, 4th Floor
Glenview, IL 60025

SEQN: 657732 COMN	Ply: 1	Job Number: 22-7559	Cust: R 215 JRef: 1Xff2150006 T37
FROM: CDM	Qty: 2	Judy Baughn	DrwNo: 131.22.0813.53477
		Truss Label: D07	KD / WHK 05/11/2022

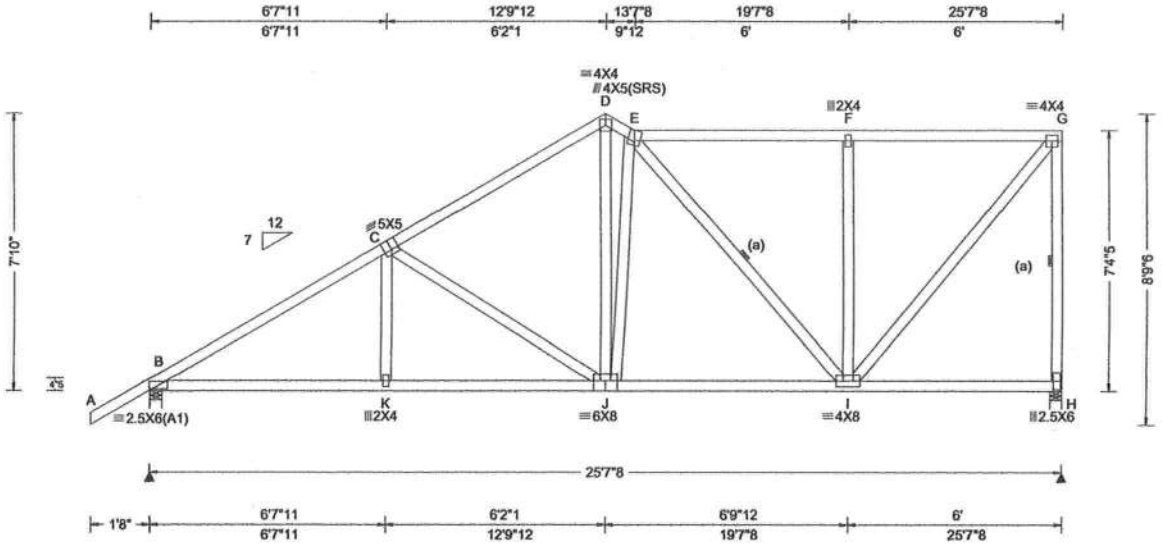

Loading Criteria (psf)

TCLL:	20.00
TCDL:	10.00
BCLL:	0.00
BCDL:	10.00
Des Ld:	40.00
NCBCLL:	10.00
Soffit:	2.00

Load Duration: 1.25
Spacing: 24.0 "

Wind Criteria
Wind Std: ASCE 7-16
Speed: 130 mph
Enclosure: Closed
Risk Category: II
EXP: C Kzt: NA
Mean Height: 15.00 ft
TCDL: 5.0 psf
BCDL: 5.0 psf
MWFRS Parallel Dist: h/2 to h
C&C Dist a: 3.00 ft
Loc. from endwall: not in 9.00 ft
GCpi: 0.18
Wind Duration: 1.60

Snow Criteria (Pg,Pf in PSF)
Pg: NA Ct: NA CAT: NA
Pf: NA Ce: NA
Lu: NA Cs: NA
Snow Duration: NA

Building Code:
FBC 7th Ed. 2020 Res.
TPI Std: 2014
Rep Fac: Yes
FT/RT:20(0)/10(0)
Plate Type(s):
WAVE

Defl/CSI Criteria

PP Deflection in	loc	L/defl	L/#
VERT(LL): 0.060	E	999	240
VERT(CL): 0.114	E	999	180
HORZ(LL): 0.021	I	-	-
HORZ(TL): 0.040	I	-	-

Creep Factor: 2.0
Max TC CSI: 0.515
Max BC CSI: 0.532
Max Web CSI: 0.921

VIEW Ver: 21.02.01.1214.12

▲ Maximum Reactions (lbs)

	Gravity			Non-Gravity		
Loc	R+	/ R-	/ Rh	/ Rw	/ U	/ RL
B	1243	/-	/-	/753	/174	/276
H	1214	/-	/-	/579	/222	/-

Wind reactions based on MWFRS
B Brg Wid = 4.0 Min Req = 1.5 (Truss)
H Brg Wid = 4.0 Min Req = 1.5 (Truss)
Bearings B & H are a rigid surface.
Members not listed have forces less than 375#

Maximum Top Chord Forces Per Ply (lbs)

Chords	Tens.	Comp.	Chords	Tens.	Comp.
B - C	431	-1759	E - F	377	-813
C - D	430	-1278	F - G	377	-813
D - E	473	-1130			

Maximum Bot Chord Forces Per Ply (lbs)

Chords	Tens.	Comp.	Chords	Tens.	Comp.
B - K	1434	-538	J - I	1059	-441
K - J	1432	-539			

Maximum Web Forces Per Ply (lbs)

Webs	Tens.	Comp.	Webs	Tens.	Comp.
C - J	173	-495	F - I	446	-451
D - J	854	-353	I - G	1256	-582
E - I	103	-379	G - H	586	-1104

Lumber
Top chord: 2x4 SP #2;
Bot chord: 2x4 SP #2;
Webs: 2x4 SP #3;

Bracing
(a) Continuous lateral restraint equally spaced on member.

Loading
Truss passed check for 20 psf additional bottom chord live load in areas with 42"-high x 24"-wide clearance.

Purlins
In lieu of structural panels use purlins to brace all flat TC @ 24" oc.

Wind
Wind loads based on MWFRS with additional C&C member design.
Right end vertical not exposed to wind pressure.
Wind loading based on both gable and hip roof types.

Additional Notes
The overall height of this truss excluding overhang is 7-10-0.

WILLIAM H. KRICK
LICENSE
No. 70861
STATE OF
FLORIDA
PROFESSIONAL ENGINEER

COA #0278
06/11/2022
Florida Certificate of Product Approval #FL 1999

****WARNING**** READ AND FOLLOW ALL NOTES ON THIS DRAWING!
****IMPORTANT**** FURNISH THIS DRAWING TO ALL CONTRACTORS INCLUDING THE INSTALLERS

Trusses require extreme care in fabricating, handling, shipping, installing and bracing. Refer to and follow the latest edition of BCSI (Building Component Safety Information, by TPI and SBCA) for safety practices prior to performing these functions. Installers shall provide temporary bracing per BCSI. Unless noted otherwise, top chord shall have properly attached structural sheathing and bottom chord shall have a properly attached rigid ceiling. Locations shown for permanent lateral restraint of webs shall have bracing installed per BCSI sections B3, B7, or B10, as applicable. Apply plates to each face of truss and position as shown above and on the Joint Details, unless noted otherwise. Refer to drawings 160A-Z for standard plate positions. Refer to job's General Notes page for additional information.

Alpine, a division of ITW Building Components Group Inc. shall not be responsible for any deviation from this drawing, any failure to build the truss in conformance with ANSI/TPI 1, or for handling, shipping, installation and bracing of trusses. A seal on this drawing or cover page listing this drawing, indicates acceptance of professional engineering responsibility solely for the design shown. The suitability and use of this drawing for any structure is the responsibility of the Building Designer per ANSI/TPI 1 Sec.2.

For more information see these web sites: Alpine: alpineitw.com; TPI: tpinst.org; SBCA: sbcacomponents.com; ICC: iccsafe.org; AWC: awc.org

ALPINE
AN ITW COMPANY
155 Harlem Ave
North Building, 4th Floor
Glenview, IL 60025

SEQN: 657735 COMN FROM: CDM	Ply: 1 Qty: 2	**Job Number:** 22-7559 Judy Baughn **Truss Label:** D08	Cust: R 215 JRef: 1Xff2150006 T46 DrwNo: 131.22.0813.51707 KD / WHK 05/11/2022

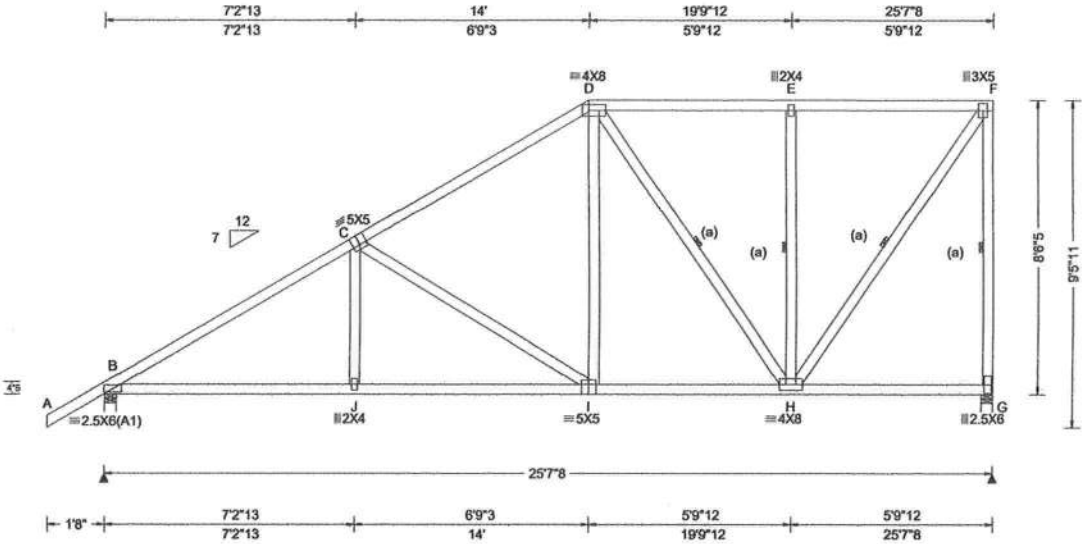

Loading Criteria (psf)

TCLL:	20.00
TCDL:	10.00
BCLL:	0.00
BCDL:	10.00
Des Ld:	40.00
NCBCLL:	10.00
Soffit:	2.00

Load Duration: 1.25
Spacing: 24.0 "

Wind Criteria
Wind Std: ASCE 7-16
Speed: 130 mph
Enclosure: Closed
Risk Category: II
EXP: C Kzt: NA
Mean Height: 15.00 ft
TCDL: 5.0 psf
BCDL: 5.0 psf
MWFRS Parallel Dist: h to 2h
C&C Dist a: 3.00 ft
Loc. from endwall: not in 9.00 ft
GCpi: 0.18
Wind Duration: 1.60

Snow Criteria (Pg,Pf in PSF)
Pg: NA Ct: NA CAT: NA
Pf: NA Ce: NA
Lu: NA Cs: NA
Snow Duration: NA

Building Code:
FBC 7th Ed. 2020 Res.
TPI Std: 2014
Rep Fac: Yes
FT/RT:20(0)/10(0)
Plate Type(s):
WAVE

Defl/CSI Criteria

PP Deflection in	loc	L/defl	L/#
VERT(LL): 0.056	J	999	240
VERT(CL): 0.105	J	999	180
HORZ(LL): 0.021	H	-	-
HORZ(TL): 0.039	H	-	-

Creep Factor: 2.0
Max TC CSI: 0.544
Max BC CSI: 0.554
Max Web CSI: 0.989

VIEW Ver: 21.02.01.1214.12

▲ Maximum Reactions (lbs)

	Gravity			Non-Gravity		
Loc	R+	/ R-	/ Rh	/ Rw	/ U	/ RL
B	1240	/-	/-	/764	/62	/229
G	1230	/-	/-	/594	/188	/-

Wind reactions based on MWFRS
B Brg Wid = 4.0 Min Req = 1.5 (Truss)
G Brg Wid = 4.0 Min Req = 1.5 (Truss)
Bearings B & G are a rigid surface.
Members not listed have forces less than 375#

Maximum Top Chord Forces Per Ply (lbs)

Chords	Tens.	Comp.	Chords	Tens.	Comp.
B - C	396	-1739	D - E	321	-684
C - D	392	-1187	E - F	321	-684

Maximum Bot Chord Forces Per Ply (lbs)

Chords	Tens.	Comp.	Chords	Tens.	Comp.
B - J	1411	-543	I - H	927	-393
J - I	1409	-544			

Maximum Web Forces Per Ply (lbs)

Webs	Tens.	Comp.	Webs	Tens.	Comp.
C - I	191	-573	E - H	425	-410
D - I	510	-44	H - F	1186	-556
D - H	125	-421	F - G	594	-1115

Lumber

Top chord: 2x4 SP #2;
Bot chord: 2x4 SP #2;
Webs: 2x4 SP #3;

Bracing

(a) Continuous lateral restraint equally spaced on member.

Loading

Truss passed check for 20 psf additional bottom chord live load in areas with 42"-high x 24"-wide clearance.

Purlins

In lieu of structural panels use purlins to brace all flat TC @ 24" oc.

Wind

Wind loads based on MWFRS with additional C&C member design.

Right end vertical not exposed to wind pressure.

Wind loading based on both gable and hip roof types.

Additional Notes

The overall height of this truss excluding overhang is 8-6-5.

WILLIAM H. KRICK
LICENSE
No. 70861
STATE OF
FLORIDA
PROFESSIONAL ENGINEER

COA #0278
Florida Certificate of Product Approval #FL 1999
05/11/2022

****WARNING**** READ AND FOLLOW ALL NOTES ON THIS DRAWING!
****IMPORTANT**** FURNISH THIS DRAWING TO ALL CONTRACTORS INCLUDING THE INSTALLERS

Trusses require extreme care in fabricating, handling, shipping, installing and bracing. Refer to and follow the latest edition of BCSI (Building Component Safety Information, by TPI and SBCA) for safety practices prior to performing these functions. Installers shall provide temporary bracing per BCSI. Unless noted otherwise, top chord shall have properly attached structural sheathing and bottom chord shall have a properly attached rigid ceiling. Locations shown for permanent lateral restraint of webs shall have bracing installed per BCSI sections B3, B7, or B10, as applicable. Apply plates to each face of truss and position as shown above and on the Joint Details, unless noted otherwise. Refer to drawings 160A-Z for standard plate positions. Refer to job's General Notes page for additional information.

Alpine, a division of ITW Building Components Group Inc. shall not be responsible for any deviation from this drawing, any failure to build the truss in conformance with ANSI/TPI 1, or for handling, shipping, installation and bracing of trusses. A seal on this drawing or cover page listing this drawing, indicates acceptance of professional engineering responsibility solely for the design shown. The suitability and use of this drawing for any structure is the responsibility of the Building Designer per ANSI/TPI 1 Sec.2.

For more information see these web sites: Alpine: alpineitw.com; TPI: tpinst.org; SBCA: sbcacomponents.com; ICC: iccsafe.org; AWC: awc.org

ALPINE
AN ITW COMPANY
155 Harlem Ave
North Building, 4th Floor
Glenview, IL 60025

SEQN: 657738 HIPM	Ply: 1	Job Number: 22-7559	Cust: R 215 JRef: 1Xff2150006 T50
FROM: CDM	Qty: 1	Judy Baughn	DrwNo: 131.22.0813.49880
		Truss Label: D09	KD / WHK 05/11/2022

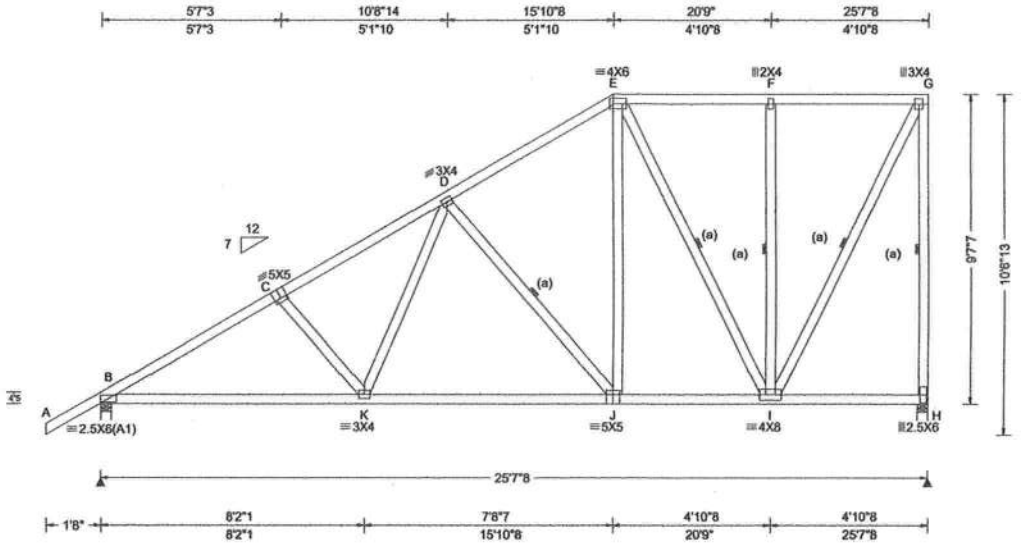

Loading Criteria (psf)

TCLL:	20.00
TCDL:	10.00
BCLL:	0.00
BCDL:	10.00
Des Ld:	40.00
NCBCLL:	10.00
Soffit:	2.00

Load Duration: 1.25
Spacing: 24.0 "

Wind Criteria
Wind Std: ASCE 7-16
Speed: 130 mph
Enclosure: Closed
Risk Category: II
EXP: C Kzt: NA
Mean Height: 15.00 ft
TCDL: 5.0 psf
BCDL: 5.0 psf
MWFRS Parallel Dist: h to 2h
C&C Dist a: 3.00 ft
Loc. from endwall: not in 9.00 ft
GCpi: 0.18
Wind Duration: 1.60

Snow Criteria (Pg,Pf in PSF)
Pg: NA Ct: NA CAT: NA
Pf: NA Ce: NA
Lu: NA Cs: NA
Snow Duration: NA

Building Code:
FBC 7th Ed. 2020 Res.
TPI Std: 2014
Rep Fac: Yes
FT/RT:20(0)/10(0)
Plate Type(s):
WAVE

Defl/CSI Criteria

PP Deflection in	loc	L/defl	L/#
VERT(LL): 0.052	K	999	240
VERT(CL): 0.107	K	999	180
HORZ(LL): 0.018	C	-	-
HORZ(TL): 0.036	C	-	-

Creep Factor: 2.0
Max TC CSI: 0.308
Max BC CSI: 0.667
Max Web CSI: 0.940

VIEW Ver: 21.02.01.1214.12

▲ Maximum Reactions (lbs)

	Gravity			Non-Gravity		
Loc	R+	/ R-	/ Rh	/ Rw	/ U	/ RL
B	1189	/-	/-	/771	/44	/257
H	1055	/-	/-	/616	/185	/-

Wind reactions based on MWFRS
B Brg Wid = 4.0 Min Req = 1.5 (Truss)
H Brg Wid = 4.0 Min Req = 1.5 (Truss)
Bearings B & H are a rigid surface.
Members not listed have forces less than 375#

Maximum Top Chord Forces Per Ply (lbs)

Chords	Tens.	Comp.	Chords	Tens.	Comp.
B - C	340	-1672	E - F	235	-466
C - D	345	-1467	F - G	235	-466
D - E	312	-897			

Maximum Bot Chord Forces Per Ply (lbs)

Chords	Tens.	Comp.	Chords	Tens.	Comp.
B - K	1372	-555	J - I	699	-311
K - J	1051	-438			

Maximum Web Forces Per Ply (lbs)

Webs	Tens.	Comp.	Webs	Tens.	Comp.
K - D	454	-41	E - I	164	-503
D - J	200	-551	I - G	1005	-507
E - J	552	-94	G - H	570	-1014

Lumber
Top chord: 2x4 SP #2;
Bot chord: 2x4 SP #2;
Webs: 2x4 SP #3;

Bracing
(a) Continuous lateral restraint equally spaced on member.

Purlins
In lieu of structural panels use purlins to brace all flat TC @ 24" oc.

Wind
Wind loads based on MWFRS with additional C&C member design.
Right end vertical not exposed to wind pressure.
Wind loading based on both gable and hip roof types.

Additional Notes
The overall height of this truss excluding overhang is 9-7-7.

WILLIAM H. KRICK
LICENSE
No. 70861
STATE OF FLORIDA
PROFESSIONAL ENGINEER

COA #0278
05/11/2022
Florida Certificate of Product Approval #FL 1999

****WARNING**** READ AND FOLLOW ALL NOTES ON THIS DRAWING!
****IMPORTANT**** FURNISH THIS DRAWING TO ALL CONTRACTORS INCLUDING THE INSTALLERS

Trusses require extreme care in fabricating, handling, shipping, installing and bracing. Refer to and follow the latest edition of BCSI (Building Component Safety Information, by TPI and SBCA) for safety practices prior to performing these functions. Installers shall provide temporary bracing per BCSI. Unless noted otherwise, top chord shall have properly attached structural sheathing and bottom chord shall have a properly attached rigid ceiling. Locations shown for permanent lateral restraint of webs shall have bracing installed per BCSI sections B3, B7, or B10, as applicable. Apply plates to each face of truss and position as shown above and on the Joint Details, unless noted otherwise. Refer to drawings 160A-Z for standard plate positions. Refer to job's General Notes page for additional information.

Alpine, a division of ITW Building Components Group Inc. shall not be responsible for any deviation from this drawing, any failure to build the truss in conformance with ANSI/TPI 1, or for handling, shipping, installation and bracing of trusses. A seal on this drawing or cover page listing this drawing, indicates acceptance of professional engineering responsibility solely for the design shown. The suitability and use of this drawing for any structure is the responsibility of the Building Designer per ANSI/TPI 1 Sec.2.

For more information see these web sites: Alpine: alpineitw.com; TPI: tpinst.org; SBCA: sbcacomponents.com; ICC: iccsafe.org; AWC: awc.org

ALPINE AN ITW COMPANY
155 Harlem Ave
North Building, 4th Floor
Glenview, IL 60025

SEQN: 657741 COMN	Ply: 1	Job Number: 22-7559	Cust: R 215 JRef: 1Xff2150006 T45
FROM: CDM	Qty: 1	Judy Baughn	DrwNo: 131.22.0813.47980
		Truss Label: D10	KD / WHK 05/11/2022

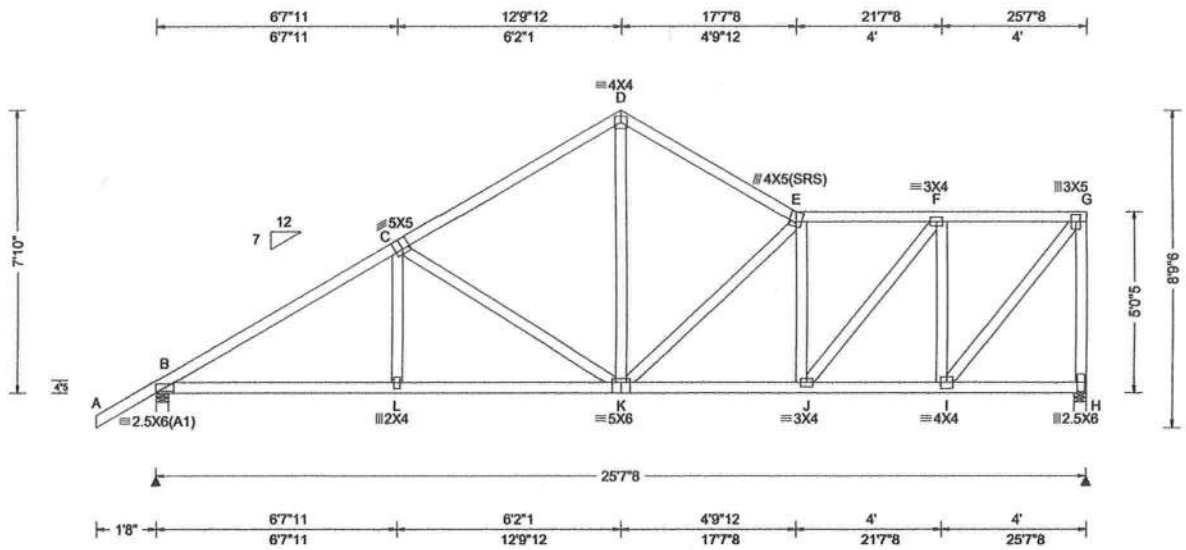

Loading Criteria (psf)

TCLL:	20.00
TCDL:	10.00
BCLL:	0.00
BCDL:	10.00
Des Ld:	40.00
NCBCLL:	10.00
Soffit:	2.00

Load Duration: 1.25
Spacing: 24.0 "

Wind Criteria
Wind Std: ASCE 7-16
Speed: 130 mph
Enclosure: Closed
Risk Category: II
EXP: C Kzt: NA
Mean Height: 15.00 ft
TCDL: 5.0 psf
BCDL: 5.0 psf
MWFRS Parallel Dist: h/2 to h
C&C Dist a: 3.00 ft
Loc. from endwall: not in 9.00 ft
GCpi: 0.18
Wind Duration: 1.60

Snow Criteria (Pg,Pf in PSF)
Pg: NA Ct: NA CAT: NA
Pf: NA Ce: NA
Lu: NA Cs: NA
Snow Duration: NA

Building Code:
FBC 7th Ed. 2020 Res.
TPI Std: 2014
Rep Fac: Yes
FT/RT:20(0)/10(0)
Plate Type(s):
WAVE

Defl/CSI Criteria

PP Deflection in	loc	L/defl	L/#
VERT(LL): 0.055	K	999	240
VERT(CL): 0.114	K	999	180
HORZ(LL): 0.021	I	-	-
HORZ(TL): 0.042	I	-	-

Creep Factor: 2.0
Max TC CSI: 0.413
Max BC CSI: 0.480
Max Web CSI: 0.520

VIEW Ver: 21.02.01.1214.12

▲ Maximum Reactions (lbs)

Loc	Gravity R+	Gravity R-	Gravity Rh	Non-Gravity Rw	Non-Gravity U	Non-Gravity RL
B	1189	/-	/-	/730	/191	/211
H	1055	/-	/-	/561	/199	/-

Wind reactions based on MWFRS
B Brg Wid = 4.0 Min Req = 1.5 (Truss)
H Brg Wid = 4.0 Min Req = 1.5 (Truss)
Bearings B & H are a rigid surface.
Members not listed have forces less than 375#

Maximum Top Chord Forces Per Ply (lbs)

Chords	Tens.	Comp.	Chords	Tens.	Comp.
B - C	369	-1661	E - F	420	-1210
C - D	359	-1164	F - G	304	-746
D - E	364	-1128			

Maximum Bot Chord Forces Per Ply (lbs)

Chords	Tens.	Comp.	Chords	Tens.	Comp.
B - L	1350	-402	K - J	1239	-430
L - K	1348	-403	J - I	798	-329

Maximum Web Forces Per Ply (lbs)

Webs	Tens.	Comp.	Webs	Tens.	Comp.
C - K	175	-513	J - F	685	-151
D - K	713	-210	F - I	416	-834
K - E	244	-450	I - G	1182	-481
E - J	165	-467	G - H	478	-1023

Lumber
Top chord: 2x4 SP #2;
Bot chord: 2x4 SP #2;
Webs: 2x4 SP #3;

Purlins
In lieu of structural panels use purlins to brace all flat TC @ 24" oc.

Wind
Wind loads based on MWFRS with additional C&C member design.
Right end vertical not exposed to wind pressure.
Wind loading based on both gable and hip roof types.

Additional Notes
The overall height of this truss excluding overhang is 7-10-0.

WILLIAM H. KRICK
LICENSE
No. 70861
STATE OF FLORIDA
PROFESSIONAL ENGINEER

COA #0278
05/11/2022
Florida Certificate of Product Approval #FL 1999

****WARNING**** READ AND FOLLOW ALL NOTES ON THIS DRAWING!
****IMPORTANT**** FURNISH THIS DRAWING TO ALL CONTRACTORS INCLUDING THE INSTALLERS

Trusses require extreme care in fabricating, handling, shipping, installing and bracing. Refer to and follow the latest edition of BCSI (Building Component Safety Information, by TPI and SBCA) for safety practices prior to performing these functions. Installers shall provide temporary bracing per BCSI. Unless noted otherwise, top chord shall have properly attached structural sheathing and bottom chord shall have a properly attached rigid ceiling. Locations shown for permanent lateral restraint of webs shall have bracing installed per BCSI sections B3, B7, or B10, as applicable. Apply plates to each face of truss and position as shown above and on the Joint Details, unless noted otherwise. Refer to drawings 160A-Z for standard plate positions. Refer to job's General Notes page for additional information.

Alpine, a division of ITW Building Components Group Inc. shall not be responsible for any deviation from this drawing, any failure to build the truss in conformance with ANSI/TPI 1, or for handling, shipping, installation and bracing of trusses. A seal on this drawing or cover page listing this drawing, indicates acceptance of professional engineering responsibility solely for the design shown. The suitability and use of this drawing for any structure is the responsibility of the Building Designer per ANSI/TPI 1 Sec.2.

For more information see these web sites: Alpine: alpineitw.com; TPI: tpinst.org; SBCA: sbcacomponents.com; ICC: iccsafe.org; AWC: awc.org

ALPINE AN ITW COMPANY
155 Harlem Ave
North Building, 4th Floor
Glenview, IL 60025

SEQN: 657744 COMN	Ply: 1	Job Number: 22-7559	Cust: R 215 JRef: 1Xff2150006 T38
FROM: CDM	Qty: 1	Judy Baughn	DrwNo: 131.22.0813.46337
		Truss Label: D11	KD / WHK 05/11/2022

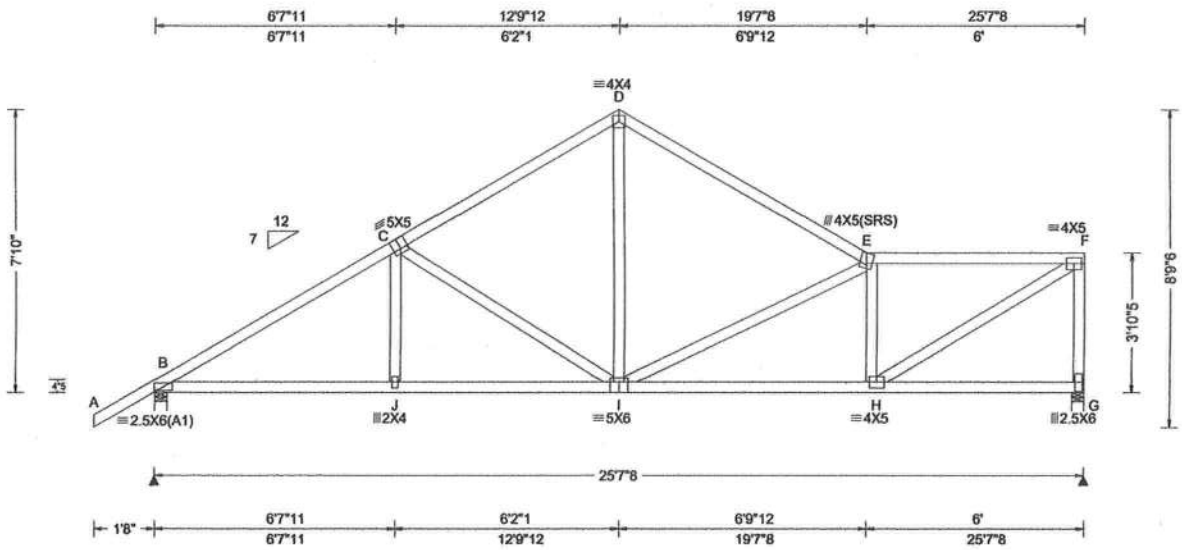

Loading Criteria (psf)	Wind Criteria	Snow Criteria (Pg,Pf in PSF)	Defl/CSI Criteria
TCLL: 20.00	Wind Std: ASCE 7-16	Pg: NA Ct: NA CAT: NA	PP Deflection in loc L/defl L/#
TCDL: 10.00	Speed: 130 mph	Pf: NA Ce: NA	VERT(LL): 0.060 I 999 240
BCLL: 0.00	Enclosure: Closed	Lu: NA Cs: NA	VERT(CL): 0.124 I 999 180
BCDL: 10.00	Risk Category: II	Snow Duration: NA	HORZ(LL): 0.021 G - -
Des Ld: 40.00	EXP: C Kzt: NA		HORZ(TL): 0.043 G - -
NCBCLL: 10.00	Mean Height: 15.00 ft	Building Code:	Creep Factor: 2.0
Soffit: 2.00	TCDL: 5.0 psf	FBC 7th Ed. 2020 Res.	Max TC CSI: 0.490
Load Duration: 1.25	BCDL: 5.0 psf	TPI Std: 2014	Max BC CSI: 0.539
Spacing: 24.0 "	MWFRS Parallel Dist: h/2 to h	Rep Fac: Yes	Max Web CSI: 0.655
	C&C Dist a: 3.00 ft	FT/RT:20(0)/10(0)	
	Loc. from endwall: not in 4.50 ft	Plate Type(s):	
	GCpi: 0.18	WAVE	VIEW Ver: 21.02.01.1214.12
	Wind Duration: 1.60		

▲ Maximum Reactions (lbs)

	Gravity			Non-Gravity		
Loc	R+	/ R-	/ Rh	/ Rw	/ U	/ RL
B	1189	/-	/-	/722	/197	/211
G	1055	/-	/-	/549	/190	/-

Wind reactions based on MWFRS
B Brg Wid = 4.0 Min Req = 1.5 (Truss)
G Brg Wid = 4.0 Min Req = 1.5 (Truss)
Bearings B & G are a rigid surface.
Members not listed have forces less than 375#

Maximum Top Chord Forces Per Ply (lbs)

Chords	Tens.	Comp.	Chords	Tens.	Comp.
B - C	343	-1658	D - E	330	-1182
C - D	333	-1170	E - F	417	-1374

Maximum Bot Chord Forces Per Ply (lbs)

Chords	Tens.	Comp.	Chords	Tens.	Comp.
B - J	1346	-336	I - H	1432	-444
J - I	1344	-337			

Maximum Web Forces Per Ply (lbs)

Webs	Tens.	Comp.	Webs	Tens.	Comp.
C - I	173	-496	E - H	330	-717
D - I	673	-161	H - F	1605	-481
I - E	284	-570	F - G	420	-1007

Lumber

Top chord: 2x4 SP #2;
Bot chord: 2x4 SP #2;
Webs: 2x4 SP #3;

Purlins

In lieu of structural panels use purlins to brace all flat TC @ 24" oc.

Wind

Wind loads based on MWFRS with additional C&C member design.

Right end vertical not exposed to wind pressure.

Wind loading based on both gable and hip roof types.

Additional Notes

The overall height of this truss excluding overhang is 7-10-0.

WILLIAM H. KRICK
LICENSE
No. 70861
STATE OF FLORIDA
PROFESSIONAL ENGINEER

COA #0278

Florida Certificate of Product Approval #FL 1999

06/11/2022

****WARNING**** READ AND FOLLOW ALL NOTES ON THIS DRAWING!
****IMPORTANT**** FURNISH THIS DRAWING TO ALL CONTRACTORS INCLUDING THE INSTALLERS

Trusses require extreme care in fabricating, handling, shipping, installing and bracing. Refer to and follow the latest edition of BCSI (Building Component Safety Information, by TPI and SBCA) for safety practices prior to performing these functions. Installers shall provide temporary bracing per BCSI. Unless noted otherwise, top chord shall have properly attached structural sheathing and bottom chord shall have a properly attached rigid ceiling. Locations shown for permanent lateral restraint of webs shall have bracing installed per BCSI sections B3, B7, or B10, as applicable. Apply plates to each face of truss and position as shown above and on the Joint Details, unless noted otherwise. Refer to drawings 160A-Z for standard plate positions. Refer to job's General Notes page for additional information.

Alpine, a division of ITW Building Components Group Inc. shall not be responsible for any deviation from this drawing, any failure to build the truss in conformance with ANSI/TPI 1, or for handling, shipping, installation and bracing of trusses. A seal on this drawing or cover page listing this drawing, indicates acceptance of professional engineering responsibility solely for the design shown. The suitability and use of this drawing for any structure is the responsibility of the Building Designer per ANSI/TPI 1 Sec.2.

For more information see these web sites: Alpine: alpineitw.com; TPI: tpinst.org; SBCA: sbcacomponents.com; ICC: iccsafe.org; AWC: awc.org

ALPINE AN ITW COMPANY
155 Harlem Ave
North Building, 4th Floor
Glenview, IL 60025

SEQN: 657747 COMN FROM: CDM	Ply: 1 Qty: 1	**Job Number:** 22-7559 Judy Baughn **Truss Label:** D12		Cust: R 215 JRef: 1Xf2150006 T44 DrwNo: 131.22.0813.44613 KD / WHK 05/11/2022

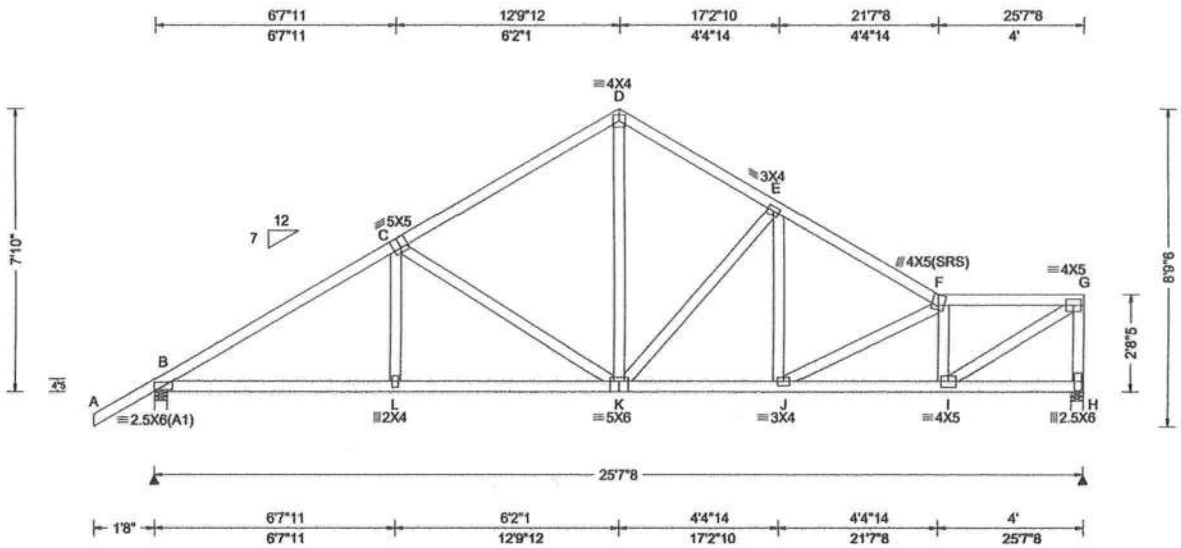

Loading Criteria (psf)

TCLL:	20.00
TCDL:	10.00
BCLL:	0.00
BCDL:	10.00
Des Ld:	40.00
NCBCLL:	10.00
Soffit:	2.00

Load Duration: 1.25
Spacing: 24.0 "

Wind Criteria
Wind Std: ASCE 7-16
Speed: 130 mph
Enclosure: Closed
Risk Category: II
EXP: C Kzt: NA
Mean Height: 15.00 ft
TCDL: 5.0 psf
BCDL: 5.0 psf
MWFRS Parallel Dist: 0 to h/2
C&C Dist a: 3.00 ft
Loc. from endwall: not in 4.50 ft
GCpi: 0.18
Wind Duration: 1.60

Snow Criteria (Pg,Pf in PSF)
Pg: NA Ct: NA CAT: NA
Pf: NA Ce: NA
Lu: NA Cs: NA
Snow Duration: NA

Building Code:
FBC 7th Ed. 2020 Res.
TPI Std: 2014
Rep Fac: Yes
FT/RT:20(0)/10(0)
Plate Type(s):
WAVE

Defl/CSI Criteria

PP Deflection in	loc	L/defl	L/#
VERT(LL): 0.060	K	999	240
VERT(CL): 0.124	K	999	180
HORZ(LL): 0.023	H	-	-
HORZ(TL): 0.047	H	-	-

Creep Factor: 2.0
Max TC CSI: 0.418
Max BC CSI: 0.485
Max Web CSI: 0.639

VIEW Ver: 21.02.01.1214.12

▲ Maximum Reactions (lbs)

Loc	Gravity R+	Gravity / R-	Gravity / Rh	Non-Gravity / Rw	Non-Gravity / U	Non-Gravity / RL
B	1189	/-	/-	/716	/202	/211
H	1055	/-	/-	/554	/182	/-

Wind reactions based on MWFRS
B Brg Wid = 4.0 Min Req = 1.5 (Truss)
H Brg Wid = 4.0 Min Req = 1.5 (Truss)
Bearings B & H are a rigid surface.
Members not listed have forces less than 375#

Maximum Top Chord Forces Per Ply (lbs)

Chords	Tens.	Comp.	Chords	Tens.	Comp.
B - C	326	-1662	E - F	355	-1488
C - D	314	-1162	F - G	366	-1416
D - E	323	-1123			

Maximum Bot Chord Forces Per Ply (lbs)

Chords	Tens.	Comp.	Chords	Tens.	Comp.
B - L	1351	-279	K - J	1216	-246
L - K	1349	-280	J - I	1517	-401

Maximum Web Forces Per Ply (lbs)

Webs	Tens.	Comp.	Webs	Tens.	Comp.
C - K	179	-518	F - I	285	-838
D - K	740	-177	I - G	1676	-430
K - E	176	-460	G - H	345	-1019

Lumber
Top chord: 2x4 SP #2;
Bot chord: 2x4 SP #2;
Webs: 2x4 SP #3;

Purlins
In lieu of structural panels use purlins to brace all flat TC @ 24" oc.

Wind
Wind loads based on MWFRS with additional C&C member design.
Right end vertical not exposed to wind pressure.
Wind loading based on both gable and hip roof types.

Additional Notes
The overall height of this truss excluding overhang is 7-10-0.

WILLIAM H. KRICK
LICENSE
No. 70861
STATE OF FLORIDA
PROFESSIONAL ENGINEER

COA #0278
05/11/2022
Florida Certificate of Product Approval #FL 1999

****WARNING**** READ AND FOLLOW ALL NOTES ON THIS DRAWING!
****IMPORTANT**** FURNISH THIS DRAWING TO ALL CONTRACTORS INCLUDING THE INSTALLERS

Trusses require extreme care in fabricating, handling, shipping, installing and bracing. Refer to and follow the latest edition of BCSI (Building Component Safety Information, by TPI and SBCA) for safety practices prior to performing these functions. Installers shall provide temporary bracing per BCSI. Unless noted otherwise, top chord shall have properly attached structural sheathing and bottom chord shall have a properly attached rigid ceiling. Locations shown for permanent lateral restraint of webs shall have bracing installed per BCSI sections B3, B7, or B10, as applicable. Apply plates to each face of truss and position as shown above and on the Joint Details, unless noted otherwise. Refer to drawings 160A-Z for standard plate positions. Refer to job's General Notes page for additional information.

Alpine, a division of ITW Building Components Group Inc. shall not be responsible for any deviation from this drawing, any failure to build the truss in conformance with ANSI/TPI 1, or for handling, shipping, installation and bracing of trusses. A seal on this drawing or cover page listing this drawing, indicates acceptance of professional engineering responsibility solely for the design shown. The suitability and use of this drawing for any structure is the responsibility of the Building Designer per ANSI/TPI 1 Sec.2.

For more information see these web sites: Alpine: alpineitw.com; TPI: tpinst.org; SBCA: sbcacomponents.com; ICC: iccsafe.org; AWC: awc.org

ALPINE
AN ITW COMPANY
155 Harlem Ave
North Building, 4th Floor
Glenview, IL 60025

SEQN: 657750 COMN	Ply: 1	Job Number: 22-7559	Cust: R 215 JRef: 1Xff2150006 T47
FROM: CDM	Qty: 1	Judy Baughn	DrwNo: 131.22.0813.42793
		Truss Label: D13	KD / WHK 05/11/2022

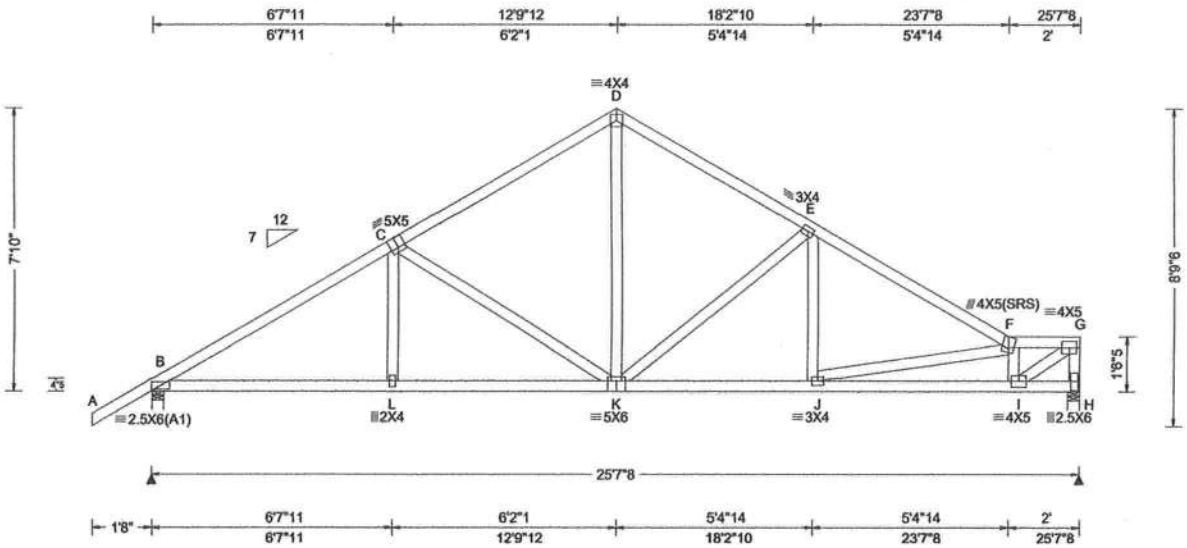

Loading Criteria (psf)

TCLL:	20.00
TCDL:	10.00
BCLL:	0.00
BCDL:	10.00
Des Ld:	40.00
NCBCLL:	10.00
Soffit:	2.00

Load Duration: 1.25
Spacing: 24.0 "

Wind Criteria
Wind Std: ASCE 7-16
Speed: 130 mph
Enclosure: Closed
Risk Category: II
EXP: C Kzt: NA
Mean Height: 15.00 ft
TCDL: 5.0 psf
BCDL: 5.0 psf
MWFRS Parallel Dist: 0 to h/2
C&C Dist a: 3.00 ft
Loc. from endwall: Any
GCpi: 0.18
Wind Duration: 1.60

Snow Criteria (Pg,Pf in PSF)
Pg: NA Ct: NA CAT: NA
Pf: NA Ce: NA
Lu: NA Cs: NA
Snow Duration: NA

Building Code:
FBC 7th Ed. 2020 Res.
TPI Std: 2014
Rep Fac: Yes
FT/RT:20(0)/10(0)
Plate Type(s):
WAVE

Defl/CSI Criteria

PP Deflection in	loc	L/defl	L/#
VERT(LL): 0.059	K	999	240
VERT(CL): 0.122	K	999	180
HORZ(LL): 0.026	H	-	-
HORZ(TL): 0.054	H	-	-

Creep Factor: 2.0
Max TC CSI: 0.414
Max BC CSI: 0.480
Max Web CSI: 0.657

VIEW Ver: 21.02.01.1214.12

▲ Maximum Reactions (lbs)

Loc	Gravity R+	Gravity / R-	Gravity / Rh	Non-Gravity / Rw	Non-Gravity / U	Non-Gravity / RL
B	1189	/-	/-	/712	/204	/211
H	1055	/-	/-	/580	/176	/-

Wind reactions based on MWFRS
B Brg Wid = 4.0 Min Req = 1.5 (Truss)
H Brg Wid = 4.0 Min Req = 1.5 (Truss)
Bearings B & H are a rigid surface.
Members not listed have forces less than 375#

Maximum Top Chord Forces Per Ply (lbs)

Chords	Tens.	Comp.	Chords	Tens.	Comp.
B - C	469	-1662	E - F	484	-1604
C - D	428	-1163	F - G	432	-1404
D - E	439	-1148			

Maximum Bot Chord Forces Per Ply (lbs)

Chords	Tens.	Comp.	Chords	Tens.	Comp.
B - L	1350	-363	K - J	1310	-341
L - K	1348	-365	J - I	1630	-520

Maximum Web Forces Per Ply (lbs)

Webs	Tens.	Comp.	Webs	Tens.	Comp.
C - K	247	-514	F - I	379	-978
D - K	722	-229	I - G	1724	-530
K - E	246	-510	G - H	340	-1033

Lumber

Top chord: 2x4 SP #2;
Bot chord: 2x4 SP #2;
Webs: 2x4 SP #3;

Purlins

In lieu of structural panels use purlins to brace all flat TC @ 24" oc.

Wind

Wind loads based on MWFRS with additional C&C member design.

Right end vertical not exposed to wind pressure.

Wind loading based on both gable and hip roof types.

Additional Notes

The overall height of this truss excluding overhang is 7-10-0.

WILLIAM H. KRICK
LICENSE
No. 70861
STATE OF FLORIDA
PROFESSIONAL ENGINEER

COA #0278

Florida Certificate of Product Approval #FL 1999

05/11/2022

****WARNING**** READ AND FOLLOW ALL NOTES ON THIS DRAWING!
****IMPORTANT**** FURNISH THIS DRAWING TO ALL CONTRACTORS INCLUDING THE INSTALLERS

Trusses require extreme care in fabricating, handling, shipping, installing and bracing. Refer to and follow the latest edition of BCSI (Building Component Safety Information, by TPI and SBCA) for safety practices prior to performing these functions. Installers shall provide temporary bracing per BCSI. Unless noted otherwise, top chord shall have properly attached structural sheathing and bottom chord shall have a properly attached rigid ceiling. Locations shown for permanent lateral restraint of webs shall have bracing installed per BCSI sections B3, B7, or B10, as applicable. Apply plates to each face of truss and position as shown above and on the Joint Details, unless noted otherwise. Refer to drawings 160A-Z for standard plate positions. Refer to job's General Notes page for additional information.

Alpine, a division of ITW Building Components Group Inc. shall not be responsible for any deviation from this drawing, any failure to build the truss in conformance with ANSI/TPI 1, or for handling, shipping, installation and bracing of trusses. A seal on this drawing or cover page listing this drawing, indicates acceptance of professional engineering responsibility solely for the design shown. The suitability and use of this drawing for any structure is the responsibility of the Building Designer per ANSI/TPI 1 Sec.2.

For more information see these web sites: Alpine: alpineitw.com; TPI: tpinst.org; SBCA: sbcacomponents.com; ICC: iccsafe.org; AWC: awc.org

ALPINE
AN ITW COMPANY
155 Harlem Ave
North Building, 4th Floor
Glenview, IL 60025

SEQN: 656925 GABL FROM: CDM	Ply: 1 Qty: 1	**Job Number:** 22-7559 Judy Baughn **Truss Label:** D14	Cust: R 215 JRef: 1Xff2150006 T34 DrwNo: 131.22.0813.40353 KD / WHK 05/11/2022

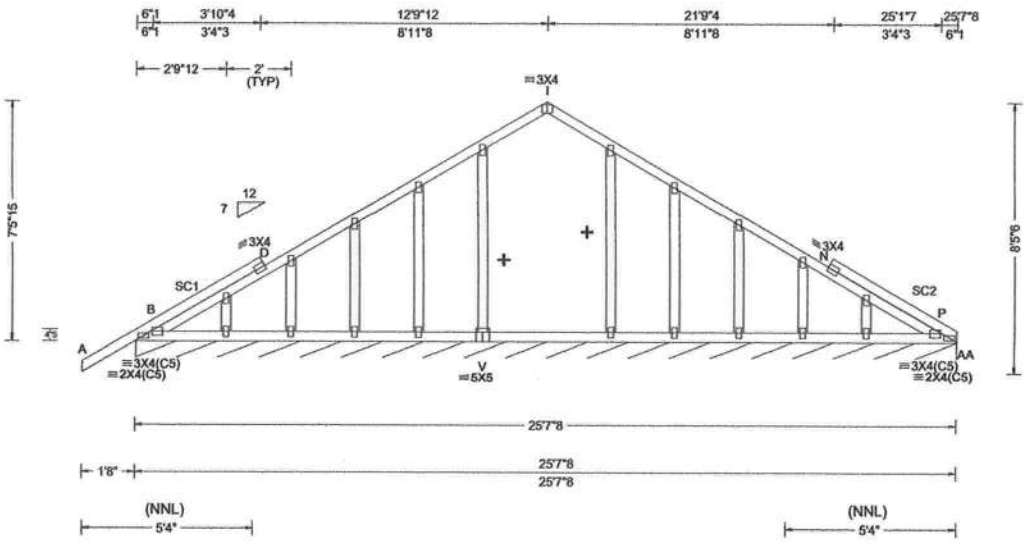

Loading Criteria (psf)	**Wind Criteria**	**Snow Criteria** (Pg,Pf in PSF)	**Defl/CSI Criteria**	**▲ Maximum Reactions (lbs), or *=PLF**
TCLL: 20.00 TCDL: 10.00 BCLL: 0.00 BCDL: 10.00 Des Ld: 40.00 NCBCLL: 10.00 Soffit: 2.00 Load Duration: 1.25 Spacing: 24.0 "	Wind Std: ASCE 7-16 Speed: 130 mph Enclosure: Closed Risk Category: II EXP: C Kzt: NA Mean Height: 15.00 ft TCDL: 5.0 psf BCDL: 5.0 psf MWFRS Parallel Dist: 0 to h/2 C&C Dist a: 3.00 ft Loc. from endwall: Any GCpi: 0.18 Wind Duration: 1.60	Pg: NA Ct: NA CAT: NA Pf: NA Ce: NA Lu: NA Cs: NA Snow Duration: NA Building Code: FBC 7th Ed. 2020 Res. TPI Std: 2014 Rep Fac: Yes FT/RT:20(0)/10(0) Plate Type(s): WAVE	PP Deflection in loc L/defl L/# VERT(LL): 0.005 I 999 240 VERT(CL): 0.008 I 999 180 HORZ(LL): 0.004 N - - HORZ(TL): 0.005 N - - Creep Factor: 2.0 Max TC CSI: 0.318 Max BC CSI: 0.095 Max Web CSI: 0.108 VIEW Ver: 21.02.01.1214.12	Gravity / Non-Gravity Loc R+ / R- / Rh / Rw / U / RL AA*88 /- /- /47 /14 /9 Wind reactions based on MWFRS AA Brg Wid = 307 Min Req = - Bearing B is a rigid surface. Members not listed have forces less than 375#

Lumber

Top chord: 2x4 SP #2;
Bot chord: 2x4 SP #2;
Webs: 2x4 SP #3;
Stack Chord: SC1 2x4 SP #2;
Stack Chord: SC2 2x4 SP #2;

Plating Notes

All plates are 2X4 except as noted.

Wind

Wind loads based on MWFRS with additional C&C member design.

Wind loading based on both gable and hip roof types.

Additional Notes

See DWGS A14015ENC160118 & GBLLETIN0118 for gable wind bracing and other requirements.

Stacked top chord must NOT be notched or cut in area (NNL). Dropped top chord braced at 24" oc intervals. Attach stacked top chord (SC) to dropped top chord in notchable area using 3x4 tie-plates 24" oc. Center plate on stacked/dropped chord interface, plate length perpendicular to chord length. Splice top chord in notchable area using 3x6.

The overall height of this truss excluding overhang is 7-5-15.

+ Member to be laterally braced for horizontal wind loads. bracing system to be desiged and furnished by others.

WILLIAM H. KRICK
LICENSE
No. 70861
STATE OF FLORIDA
PROFESSIONAL ENGINEER

COA #0278

05/11/2022

Florida Certificate of Product Approval #FL 1999

****WARNING**** READ AND FOLLOW ALL NOTES ON THIS DRAWING!
****IMPORTANT**** FURNISH THIS DRAWING TO ALL CONTRACTORS INCLUDING THE INSTALLERS

Trusses require extreme care in fabricating, handling, shipping, installing and bracing. Refer to and follow the latest edition of BCSI (Building Component Safety Information, by TPI and SBCA) for safety practices prior to performing these functions. Installers shall provide temporary bracing per BCSI. Unless noted otherwise, top chord shall have properly attached structural sheathing and bottom chord shall have a properly attached rigid ceiling. Locations shown for permanent lateral restraint of webs shall have bracing installed per BCSI sections B3, B7, or B10, as applicable. Apply plates to each face of truss and position as shown above and on the Joint Details, unless noted otherwise. Refer to drawings 160A-Z for standard plate positions. Refer to job's General Notes page for additional information.

Alpine, a division of ITW Building Components Group Inc. shall not be responsible for any deviation from this drawing, any failure to build the truss in conformance with ANSI/TPI 1, or for handling, shipping, installation and bracing of trusses. A seal on this drawing or cover page listing this drawing, indicates acceptance of professional engineering responsibility solely for the design shown. The suitability and use of this drawing for any structure is the responsibility of the Building Designer per ANSI/TPI 1 Sec.2.

For more information see these web sites: Alpine: alpineitw.com; TPI: tpinst.org; SBCA: sbcacomponents.com; ICC: iccsafe.org; AWC: awc.org

ALPINE
AN ITW COMPANY
155 Harlem Ave
North Building, 4th Floor
Glenview, IL 60025

SEQN: 656881 HIP_ FROM: CDM	Ply: 1 Qty: 1	**Job Number:** 22-7559 Judy Baughn **Truss Label:** HJ01	Cust: R 215 JRef: 1Xff2150006 T40 DrwNo: 131.22.0812.08730 KD / WHK 05/11/2022

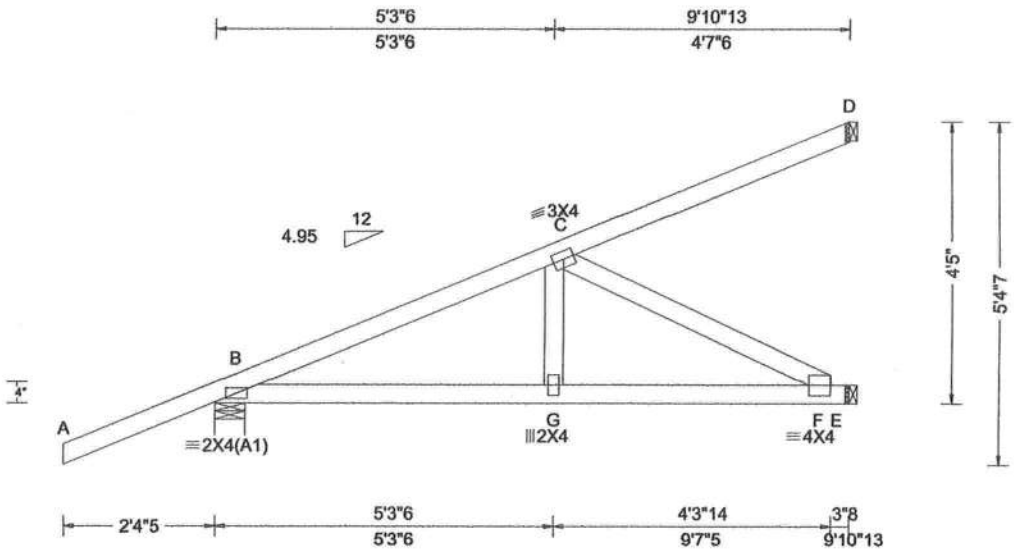

Loading Criteria (psf)		**Wind Criteria**	**Snow Criteria** (Pg,Pf in PSF)	**Defl/CSI Criteria**			
TCLL:	20.00	Wind Std: ASCE 7-16	Pg: NA Ct: NA CAT: NA	PP Deflection in	loc	L/defl	L/#
TCDL:	10.00	Speed: 130 mph	Pf: NA Ce: NA	VERT(LL): 0.020	G	999	240
BCLL:	0.00	Enclosure: Closed	Lu: NA Cs: NA	VERT(CL): 0.038	G	999	180
BCDL:	10.00	Risk Category: II	Snow Duration: NA	HORZ(LL): -0.005	B	-	-
Des Ld:	40.00	EXP: C Kzt: NA		HORZ(TL): 0.009	F	-	-
NCBCLL:	10.00	Mean Height: 15.00 ft	Building Code:	Creep Factor: 2.0			
Soffit:	2.00	TCDL: 5.0 psf	FBC 7th Ed. 2020 Res.	Max TC CSI: 0.584			
Load Duration: 1.25		BCDL: 5.0 psf	TPI Std: 2014	Max BC CSI: 0.639			
Spacing: 24.0 "		MWFRS Parallel Dist: 0 to h/2	Rep Fac: Varies by Ld Case	Max Web CSI: 0.298			
		C&C Dist a: 3.00 ft	FT/RT:20(0)/10(0)				
		Loc. from endwall: not in 4.50 ft	Plate Type(s):				
		GCpi: 0.18					
		Wind Duration: 1.60	WAVE	VIEW Ver: 21.02.01.1214.12			

▲ Maximum Reactions (lbs)

Loc	Gravity R+	Gravity / R-	/ Rh	Non-Gravity / Rw	/ U	/ RL
B	379	/-	/-	/-	/249	/-
E	327	/-	/-	/-	/94	/-
D	79	/-	/-	/-	/29	/-

Wind reactions based on MWFRS
B Brg Wid = 5.7 Min Req = 1.5 (Truss)
E Brg Wid = 1.5 Min Req = -
D Brg Wid = 1.5 Min Req = -
Bearing B is a rigid surface.
Members not listed have forces less than 375#

Maximum Top Chord Forces Per Ply (lbs)

Chords	Tens.	Comp.
B - C	277	-590

Maximum Bot Chord Forces Per Ply (lbs)

Chords	Tens.	Comp.	Chords	Tens.	Comp.
B - G	556	-218	G - F	546	-218

Maximum Web Forces Per Ply (lbs)

Webs	Tens.	Comp.
C - F	246	-618

Lumber

Top chord: 2x4 SP #2;
Bot chord: 2x4 SP #2;
Webs: 2x4 SP #3;

Special Loads

-----(Lumber Dur.Fac.=1.25 / Plate Dur.Fac.=1.25)

TC: From	0 plf at	-2.36 to	62 plf at	0.00
TC: From	2 plf at	0.00 to	2 plf at	9.90
BC: From	0 plf at	-2.36 to	4 plf at	0.00
BC: From	2 plf at	0.00 to	2 plf at	9.90

TC: -58 lb Conc. Load at 1.48
TC: 118 lb Conc. Load at 4.31
TC: 254 lb Conc. Load at 7.13
BC: 4 lb Conc. Load at 1.48
BC: 97 lb Conc. Load at 4.31
BC: 179 lb Conc. Load at 7.13

Wind

Wind loads and reactions based on MWFRS.

Wind loading based on both gable and hip roof types.

Additional Notes

The overall height of this truss excluding overhang is 4-5-0.

WILLIAM H. KRICK
LICENSE
No. 70861
STATE OF FLORIDA
PROFESSIONAL ENGINEER

COA #0278

05/11/2022

Florida Certificate of Product Approval #FL 1999

****WARNING**** READ AND FOLLOW ALL NOTES ON THIS DRAWING!
****IMPORTANT**** FURNISH THIS DRAWING TO ALL CONTRACTORS INCLUDING THE INSTALLERS

Trusses require extreme care in fabricating, handling, shipping, installing and bracing. Refer to and follow the latest edition of BCSI (Building Component Safety Information, by TPI and SBCA) for safety practices prior to performing these functions. Installers shall provide temporary bracing per BCSI. Unless noted otherwise, top chord shall have properly attached structural sheathing and bottom chord shall have a properly attached rigid ceiling. Locations shown for permanent lateral restraint of webs shall have bracing installed per BCSI sections B3, B7, or B10, as applicable. Apply plates to each face of truss and position as shown above and on the Joint Details, unless noted otherwise. Refer to drawings 160A-Z for standard plate positions. Refer to job's General Notes page for additional information.

Alpine, a division of ITW Building Components Group Inc. shall not be responsible for any deviation from this drawing, any failure to build the truss in conformance with ANSI/TPI 1, or for handling, shipping, installation and bracing of trusses. A seal on this drawing or cover page listing this drawing, indicates acceptance of professional engineering responsibility solely for the design shown. The suitability and use of this drawing for any structure is the responsibility of the Building Designer per ANSI/TPI 1 Sec.2.

For more information see these web sites: Alpine: alpineitw.com; TPI: tpinst.org; SBCA: sbcacomponents.com; ICC: iccsafe.org; AWC: awc.org

ALPINE
AN ITW COMPANY
155 Harlem Ave
North Building, 4th Floor
Glenview, IL 60025

SEQN: 656883 HIP_ FROM: CDM	Ply: 1 Qty: 1	**Job Number:** 22-7559 Judy Baughn **Truss Label:** HJ02	Cust: R 215 JRef: 1Xff2150006 T35 DrwNo: 131.22.0811.57737 KD / WHK 05/11/2022	

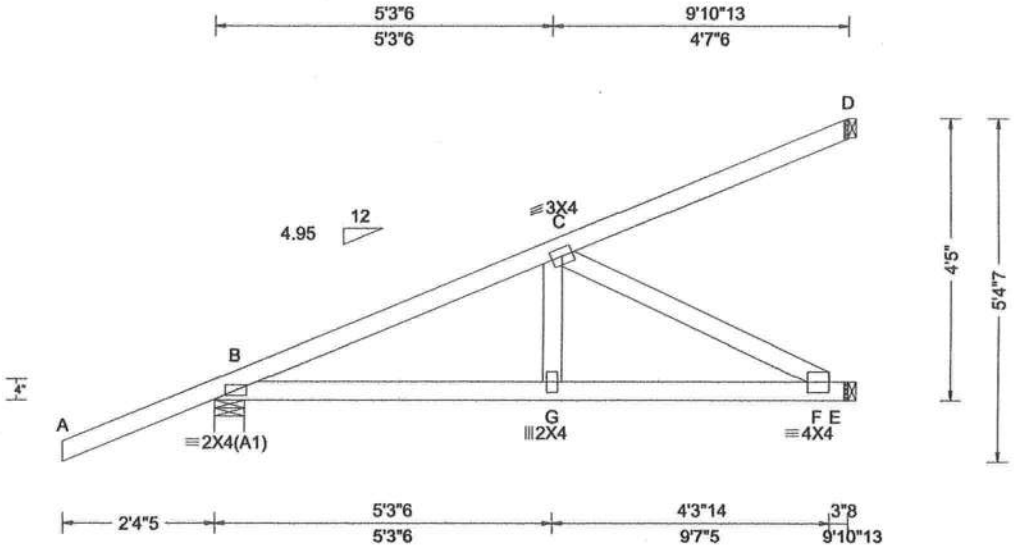

Loading Criteria (psf)		Wind Criteria	Snow Criteria (Pg,Pf in PSF)	Defl/CSI Criteria	
TCLL:	20.00	Wind Std: ASCE 7-16	Pg: NA Ct: NA CAT: NA	PP Deflection in loc L/defl L/#	
TCDL:	10.00	Speed: 130 mph	Pf: NA Ce: NA	VERT(LL): 0.021 G 999 240	
BCLL:	0.00	Enclosure: Closed	Lu: NA Cs: NA	VERT(CL): 0.040 G 999 180	
BCDL:	10.00	Risk Category: II	Snow Duration: NA	HORZ(LL): 0.005 F - -	
Des Ld:	40.00	EXP: C Kzt: NA		HORZ(TL): 0.010 F - -	
NCBCLL:	10.00	Mean Height: 15.00 ft	Building Code:	Creep Factor: 2.0	
Soffit:	2.00	TCDL: 5.0 psf	FBC 7th Ed. 2020 Res.	Max TC CSI: 0.601	
Load Duration: 1.25		BCDL: 5.0 psf	TPI Std: 2014	Max BC CSI: 0.662	
Spacing: 24.0 "		MWFRS Parallel Dist: 0 to h/2	Rep Fac: Varies by Ld Case	Max Web CSI: 0.322	
		C&C Dist a: 3.00 ft	FT/RT:20(0)/10(0)		
		Loc. from endwall: not in 4.50 ft	Plate Type(s):		
		GCpi: 0.18	WAVE	VIEW Ver: 21.02.01.1214.12	
		Wind Duration: 1.60			

▲ Maximum Reactions (lbs)

Loc	Gravity R+	Gravity / R-	Gravity / Rh	Non-Gravity / Rw	Non-Gravity / U	Non-Gravity / RL
B	379	/-	/-	/-	/254	/-
E	350	/-	/-	/-	/101	/-
D	82	/-	/-	/-	/30	/-

Wind reactions based on MWFRS
B Brg Wid = 5.7 Min Req = 1.5 (Truss)
E Brg Wid = 1.5 Min Req = -
D Brg Wid = 1.5 Min Req = -
Bearing B is a rigid surface.
Members not listed have forces less than 375#

Maximum Top Chord Forces Per Ply (lbs)

Chords	Tens.	Comp.
B - C	290	-639

Maximum Bot Chord Forces Per Ply (lbs)

Chords	Tens.	Comp.	Chords	Tens.	Comp.
B - G	600	-229	G - F	590	-229

Maximum Web Forces Per Ply (lbs)

Webs	Tens.	Comp.
C - F	259	-668

Lumber

Top chord: 2x4 SP #2;
Bot chord: 2x4 SP #2;
Webs: 2x4 SP #3;

Special Loads

——(Lumber Dur.Fac.=1.25 / Plate Dur.Fac.=1.25)

TC: From	0 plf at	-2.36 to	62 plf at	0.00
TC: From	2 plf at	0.00 to	2 plf at	9.90
BC: From	0 plf at	-2.36 to	4 plf at	0.00
BC: From	2 plf at	0.00 to	2 plf at	9.90

TC: -58 lb Conc. Load at 1.48
TC: 141 lb Conc. Load at 4.31
TC: 267 lb Conc. Load at 7.13
BC: 4 lb Conc. Load at 1.48
BC: 103 lb Conc. Load at 4.31
BC: 183 lb Conc. Load at 7.13

Wind

Wind loads and reactions based on MWFRS.

Wind loading based on both gable and hip roof types.

Additional Notes

The overall height of this truss excluding overhang is 4-5-0.

WILLIAM H. KRICK
LICENSE
No. 70861
STATE OF FLORIDA
PROFESSIONAL ENGINEER

COA #0278

05/11/2022

Florida Certificate of Product Approval #FL 1999

****WARNING**** READ AND FOLLOW ALL NOTES ON THIS DRAWING!
****IMPORTANT**** FURNISH THIS DRAWING TO ALL CONTRACTORS INCLUDING THE INSTALLERS

Trusses require extreme care in fabricating, handling, shipping, installing and bracing. Refer to and follow the latest edition of BCSI (Building Component Safety Information, by TPI and SBCA) for safety practices prior to performing these functions. Installers shall provide temporary bracing per BCSI. Unless noted otherwise, top chord shall have properly attached structural sheathing and bottom chord shall have a properly attached rigid ceiling. Locations shown for permanent lateral restraint of webs shall have bracing installed per BCSI sections B3, B7, or B10, as applicable. Apply plates to each face of truss and position as shown above and on the Joint Details, unless noted otherwise. Refer to drawings 160A-Z for standard plate positions. Refer to job's General Notes page for additional information.

Alpine, a division of ITW Building Components Group Inc. shall not be responsible for any deviation from this drawing, any failure to build the truss in conformance with ANSI/TPI 1, or for handling, shipping, installation and bracing of trusses. A seal on this drawing or cover page listing this drawing, indicates acceptance of professional engineering responsibility solely for the design shown. The suitability and use of this drawing for any structure is the responsibility of the Building Designer per ANSI/TPI 1 Sec.2.

For more information see these web sites: Alpine: alpineitw.com; TPI: tpinst.org; SBCA: sbcacomponents.com; ICC: iccsafe.org; AWC: awc.org

ALPINE
AN ITW COMPANY
155 Harlem Ave
North Building, 4th Floor
Glenview, IL 60025

SEQN: 656831 HIP_	Ply: 1	Job Number: 22-7559	Cust: R 215 JRef: 1Xff2150006 T18
FROM: CDM	Qty: 1	Judy Baughn	DrwNo: 131.22.0811.42820
		Truss Label: HJ03	KD / WHK 05/11/2022

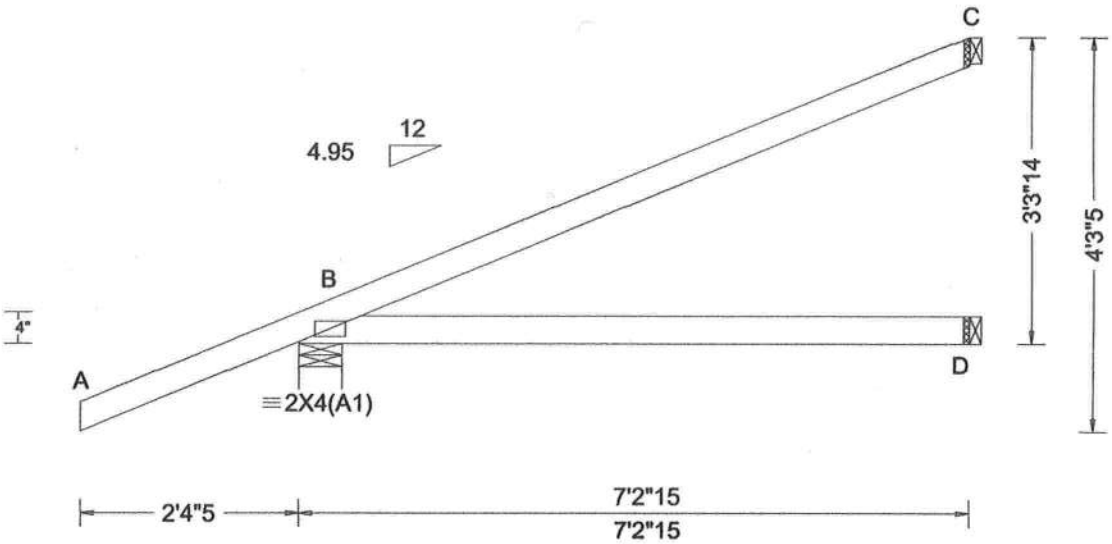

Loading Criteria (psf)	Wind Criteria	Snow Criteria (Pg,Pf in PSF)	Defl/CSI Criteria
TCLL: 20.00	Wind Std: ASCE 7-16	Pg: NA Ct: NA CAT: NA	PP Deflection in loc L/defl L/#
TCDL: 10.00	Speed: 130 mph	Pf: NA Ce: NA	VERT(LL): NA
BCLL: 0.00	Enclosure: Closed	Lu: NA Cs: NA	VERT(CL): NA
BCDL: 10.00	Risk Category: II	Snow Duration: NA	HORZ(LL): -0.015 B - -
Des Ld: 40.00	EXP: C Kzt: NA		HORZ(TL): 0.023 B - -
NCBCLL: 10.00	Mean Height: 15.00 ft	Building Code:	Creep Factor: 2.0
Soffit: 2.00	TCDL: 5.0 psf	FBC 7th Ed. 2020 Res.	Max TC CSI: 0.508
Load Duration: 1.25	BCDL: 5.0 psf	TPI Std: 2014	Max BC CSI: 0.515
Spacing: 24.0 "	MWFRS Parallel Dist: 0 to h/2	Rep Fac: Varies by Ld Case	Max Web CSI: 0.000
	C&C Dist a: 3.00 ft	FT/RT:20(0)/10(0)	
	Loc. from endwall: Any	Plate Type(s):	
	GCpi: 0.18	WAVE	VIEW Ver: 21.02.01.1214.12
	Wind Duration: 1.60		

▲ Maximum Reactions (lbs)

Loc	Gravity R+	Gravity / R-	Non-Gravity / Rh	Non-Gravity / Rw	Non-Gravity / U	Non-Gravity / RL
B	301	/-	/-	/-	/200	/-
D	129	/-	/-	/-	/13	/-
C	78	/-	/-	/-	/49	/-

Wind reactions based on MWFRS
B Brg Wid = 5.6 Min Req = 1.5 (Truss)
D Brg Wid = 1.5 Min Req = -
C Brg Wid = 1.5 Min Req = -
Bearing B is a rigid surface.
Members not listed have forces less than 375#

Lumber

Top chord: 2x4 SP #2;
Bot chord: 2x4 SP #2;

Special Loads

-----(Lumber Dur.Fac.=1.25 / Plate Dur.Fac.=1.25)

TC: From	-0 plf at	-2.36 to	62 plf at	0.00
TC: From	2 plf at	0.00 to	2 plf at	7.24
BC: From	0 plf at	-2.36 to	4 plf at	0.00
BC: From	2 plf at	0.00 to	2 plf at	7.24

TC: -58 lb Conc. Load at 1.48
TC: 118 lb Conc. Load at 4.31
BC: 4 lb Conc. Load at 1.48
BC: 97 lb Conc. Load at 4.31

Wind

Wind loads and reactions based on MWFRS.

Wind loading based on both gable and hip roof types.

Additional Notes

The overall height of this truss excluding overhang is 3-3-14.

WILLIAM H. KRICK
LICENSE
No. 70861
STATE OF
FLORIDA
PROFESSIONAL ENGINEER

COA #0278

05/11/2022

Florida Certificate of Product Approval #FL 1999

WARNING READ AND FOLLOW ALL NOTES ON THIS DRAWING!
IMPORTANT FURNISH THIS DRAWING TO ALL CONTRACTORS INCLUDING THE INSTALLERS

Trusses require extreme care in fabricating, handling, shipping, installing and bracing. Refer to and follow the latest edition of BCSI (Building Component Safety Information, by TPI and SBCA) for safety practices prior to performing these functions. Installers shall provide temporary bracing per BCSI. Unless noted otherwise, top chord shall have properly attached structural sheathing and bottom chord shall have a properly attached rigid ceiling. Locations shown for permanent lateral restraint of webs shall have bracing installed per BCSI sections B3, B7, or B10, as applicable. Apply plates to each face of truss and position as shown above and on the Joint Details, unless noted otherwise. Refer to drawings 160A-Z for standard plate positions. Refer to job's General Notes page for additional information.

Alpine, a division of ITW Building Components Group Inc. shall not be responsible for any deviation from this drawing, any failure to build the truss in conformance with ANSI/TPI 1, or for handling, shipping, installation and bracing of trusses. A seal on this drawing or cover page listing this drawing, indicates acceptance of professional engineering responsibility solely for the design shown. The suitability and use of this drawing for any structure is the responsibility of the Building Designer per ANSI/TPI 1 Sec.2.

For more information see these web sites: Alpine: alpineitw.com; TPI: tpinst.org; SBCA: sbcacomponents.com; ICC: iccsafe.org; AWC: awc.org

ALPINE AN ITW COMPANY
155 Harlem Ave
North Building, 4th Floor
Glenview, IL 60025

SEQN: 656837 HIP_	Ply: 1	Job Number: 22-7559	Cust: R 215 JRef: 1Xff2150006 T15
FROM: CDM	Qty: 1	Judy Baughn	DrwNo: 131.22.0811.31850
		Truss Label: HJ04	KD / WHK 05/11/2022

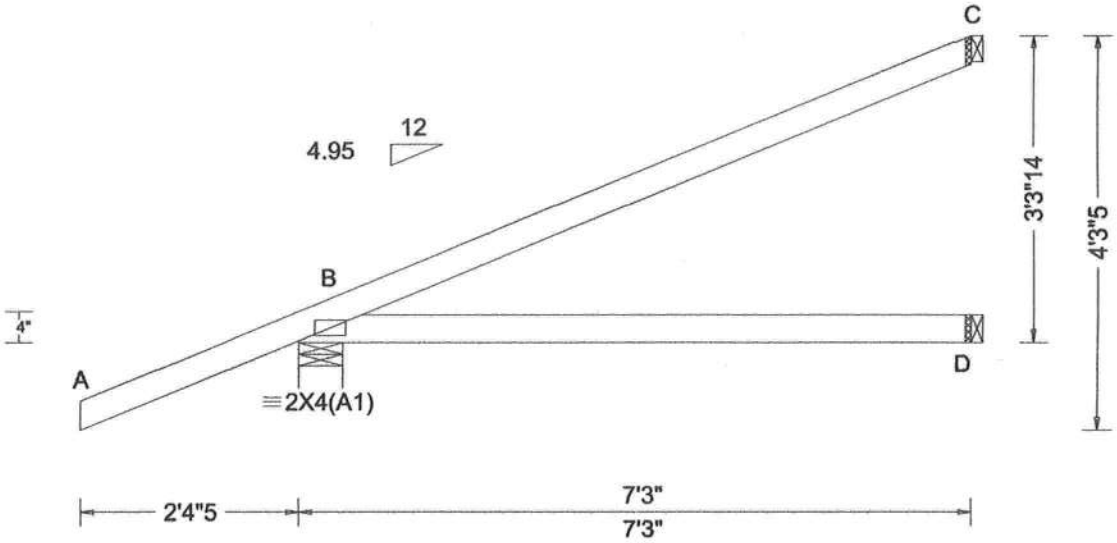

Loading Criteria (psf)	Wind Criteria	Snow Criteria (Pg,Pf in PSF)	Defl/CSI Criteria
TCLL: 20.00	Wind Std: ASCE 7-16	Pg: NA Ct: NA CAT: NA	PP Deflection in loc L/defl L/#
TCDL: 10.00	Speed: 130 mph	Pf: NA Ce: NA	VERT(LL): NA
BCLL: 0.00	Enclosure: Closed	Lu: NA Cs: NA	VERT(CL): NA
BCDL: 10.00	Risk Category: II	Snow Duration: NA	HORZ(LL): -0.015 B - -
Des Ld: 40.00	EXP: C Kzt: NA		HORZ(TL): 0.023 B - -
NCBCLL: 10.00	Mean Height: 15.00 ft	Building Code:	Creep Factor: 2.0
Soffit: 2.00	TCDL: 5.0 psf	FBC 7th Ed. 2020 Res.	Max TC CSI: 0.509
Load Duration: 1.25	BCDL: 5.0 psf	TPI Std: 2014	Max BC CSI: 0.516
Spacing: 24.0 "	MWFRS Parallel Dist: 0 to h/2	Rep Fac: Varies by Ld Case	Max Web CSI: 0.000
	C&C Dist a: 3.00 ft	FT/RT:20(0)/10(0)	
	Loc. from endwall: not in 4.50 ft	Plate Type(s):	
	GCpi: 0.18	WAVE	VIEW Ver: 21.02.01.1214.12
	Wind Duration: 1.60		

▲ Maximum Reactions (lbs)

	Gravity		Non-Gravity			
Loc	R+	/ R-	/ Rh	/ Rw	/ U	/ RL
B	301	/-	/-	/-	/200	/-
D	129	/-	/-	/-	/13	/-
C	78	/-	/-	/-	/49	/-

Wind reactions based on MWFRS
B Brg Wid = 5.7 Min Req = 1.5 (Truss)
D Brg Wid = 1.5 Min Req = -
C Brg Wid = 1.5 Min Req = -
Bearing B is a rigid surface.
Members not listed have forces less than 375#

Lumber

Top chord: 2x4 SP #2;
Bot chord: 2x4 SP #2;

Special Loads

-----(Lumber Dur.Fac.=1.25 / Plate Dur.Fac.=1.25)

TC: From	-0 plf at	-2.36 to	62 plf at	0.00
TC: From	2 plf at	0.00 to	2 plf at	7.25
BC: From	0 plf at	-2.36 to	4 plf at	0.00
BC: From	2 plf at	0.00 to	2 plf at	7.25

TC: -58 lb Conc. Load at 1.48
TC: 118 lb Conc. Load at 4.31
BC: 4 lb Conc. Load at 1.48
BC: 97 lb Conc. Load at 4.31

Wind

Wind loads and reactions based on MWFRS.

Wind loading based on both gable and hip roof types.

Additional Notes

The overall height of this truss excluding overhang is 3-3-14.

WILLIAM H. KRICK
LICENSE
No. 70861
STATE OF FLORIDA
PROFESSIONAL ENGINEER

COA #0278

05/11/2022

Florida Certificate of Product Approval #FL 1999

WARNING READ AND FOLLOW ALL NOTES ON THIS DRAWING!
IMPORTANT FURNISH THIS DRAWING TO ALL CONTRACTORS INCLUDING THE INSTALLERS

Trusses require extreme care in fabricating, handling, shipping, installing and bracing. Refer to and follow the latest edition of BCSI (Building Component Safety Information, by TPI and SBCA) for safety practices prior to performing these functions. Installers shall provide temporary bracing per BCSI. Unless noted otherwise, top chord shall have properly attached structural sheathing and bottom chord shall have a properly attached rigid ceiling. Locations shown for permanent lateral restraint of webs shall have bracing installed per BCSI sections B3, B7, or B10, as applicable. Apply plates to each face of truss and position as shown above and on the Joint Details, unless noted otherwise. Refer to drawings 160A-Z for standard plate positions. Refer to job's General Notes page for additional information.

Alpine, a division of ITW Building Components Group Inc. shall not be responsible for any deviation from this drawing, any failure to build the truss in conformance with ANSI/TPI 1, or for handling, shipping, installation and bracing of trusses. A seal on this drawing or cover page listing this drawing, indicates acceptance of professional engineering responsibility solely for the design shown. The suitability and use of this drawing for any structure is the responsibility of the Building Designer per ANSI/TPI 1 Sec.2.

For more information see these web sites: Alpine: alpineitw.com; TPI: tpinst.org; SBCA: sbcacomponents.com; ICC: iccsafe.org; AWC: awc.org

ALPINE AN ITW COMPANY
155 Harlem Ave
North Building, 4th Floor
Glenview, IL 60025

SEQN: 656833 JACK FROM: CDM	Ply: 1 Qty: 6	**Job Number:** 22-7559 Judy Baughn **Truss Label:** J01	Cust: R 215 JRef: 1Xff2150006 T10 DrwNo: 131.22.0811.24277 KD / WHK 05/11/2022

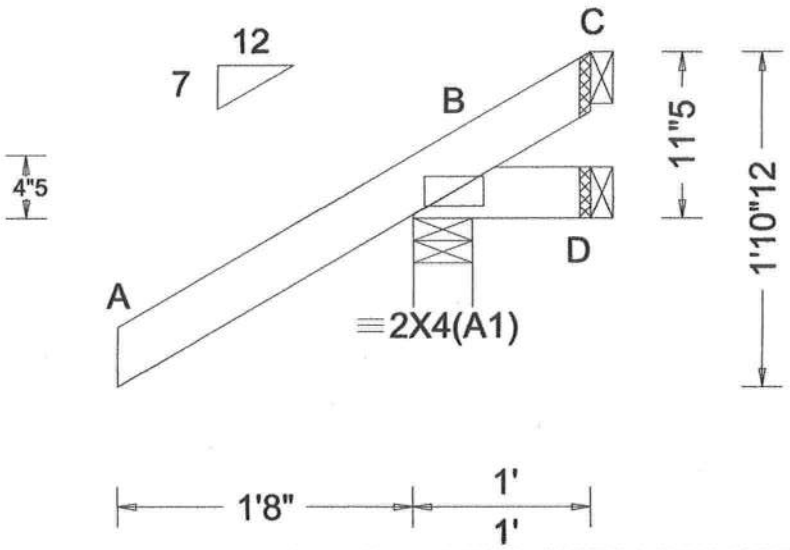

Loading Criteria (psf)	**Wind Criteria**	**Snow Criteria** (Pg,Pf in PSF)	**Defl/CSI Criteria**
TCLL: 20.00 TCDL: 10.00 BCLL: 0.00 BCDL: 10.00 Des Ld: 40.00 NCBCLL: 10.00 Soffit: 2.00 Load Duration: 1.25 Spacing: 24.0 "	Wind Std: ASCE 7-16 Speed: 130 mph Enclosure: Closed Risk Category: II EXP: C Kzt: NA Mean Height: 15.00 ft TCDL: 5.0 psf BCDL: 5.0 psf MWFRS Parallel Dist: 0 to h/2 C&C Dist a: 3.00 ft Loc. from endwall: Any GCpi: 0.18 Wind Duration: 1.60	Pg: NA Ct: NA CAT: NA Pf: NA Ce: NA Lu: NA Cs: NA Snow Duration: NA Building Code: FBC 7th Ed. 2020 Res. TPI Std: 2014 Rep Fac: Yes FT/RT:20(0)/10(0) Plate Type(s): WAVE	PP Deflection in loc L/defl L/# VERT(LL): NA VERT(CL): NA HORZ(LL): -0.000 B - - HORZ(TL): 0.001 B - - Creep Factor: 2.0 Max TC CSI: 0.308 Max BC CSI: 0.048 Max Web CSI: 0.000 VIEW Ver: 21.02.01.1214.12

▲ Maximum Reactions (lbs)

	Gravity			Non-Gravity		
Loc	R+	/ R-	/ Rh	/ Rw	/ U	/ RL
B	291	/-	/-	/238	/75	/47
D	2	/-23	/-	/17	/20	/-
C	-	/-72	/-	/42	/70	/-

Wind reactions based on MWFRS
B Brg Wid = 4.0 Min Req = 1.5 (Truss)
D Brg Wid = 1.5 Min Req = -
C Brg Wid = 1.5 Min Req = -
Bearing B is a rigid surface.
Members not listed have forces less than 375#

Lumber

Top chord: 2x4 SP #2;
Bot chord: 2x4 SP #2;

Wind

Wind loads based on MWFRS with additional C&C member design.

Wind loading based on both gable and hip roof types.

Additional Notes

The overall height of this truss excluding overhang is 0-11-5.

WILLIAM H. KRICK
LICENSE
No. 70861
STATE OF FLORIDA
PROFESSIONAL ENGINEER

COA #0278

05/11/2022

Florida Certificate of Product Approval #FL 1999

****WARNING**** READ AND FOLLOW ALL NOTES ON THIS DRAWING!
****IMPORTANT**** FURNISH THIS DRAWING TO ALL CONTRACTORS INCLUDING THE INSTALLERS

Trusses require extreme care in fabricating, handling, shipping, installing and bracing. Refer to and follow the latest edition of BCSI (Building Component Safety Information, by TPI and SBCA) for safety practices prior to performing these functions. Installers shall provide temporary bracing per BCSI. Unless noted otherwise, top chord shall have properly attached structural sheathing and bottom chord shall have a properly attached rigid ceiling. Locations shown for permanent lateral restraint of webs shall have bracing installed per BCSI sections B3, B7, or B10, as applicable. Apply plates to each face of truss and position as shown above and on the Joint Details, unless noted otherwise. Refer to drawings 160A-Z for standard plate positions. Refer to job's General Notes page for additional information.

Alpine, a division of ITW Building Components Group Inc. shall not be responsible for any deviation from this drawing, any failure to build the truss in conformance with ANSI/TPI 1, or for handling, shipping, installation and bracing of trusses. A seal on this drawing or cover page listing this drawing, indicates acceptance of professional engineering responsibility solely for the design shown. The suitability and use of this drawing for any structure is the responsibility of the Building Designer per ANSI/TPI 1 Sec.2.

For more information see these web sites: Alpine: alpineitw.com; TPI: tpinst.org; SBCA: sbcacomponents.com; ICC: iccsafe.org; AWC: awc.org

ALPINE
AN ITW COMPANY
155 Harlem Ave
North Building, 4th Floor
Glenview, IL 60025

SEQN: 656835 JACK	Ply: 1	Job Number: 22-7559	Cust: R 215 JRef: 1Xff2150006 T9
FROM: CDM	Qty: 5	Judy Baughn	DrwNo: 131.22.0811.22030
		Truss Label: J02	KD / WHK 05/11/2022

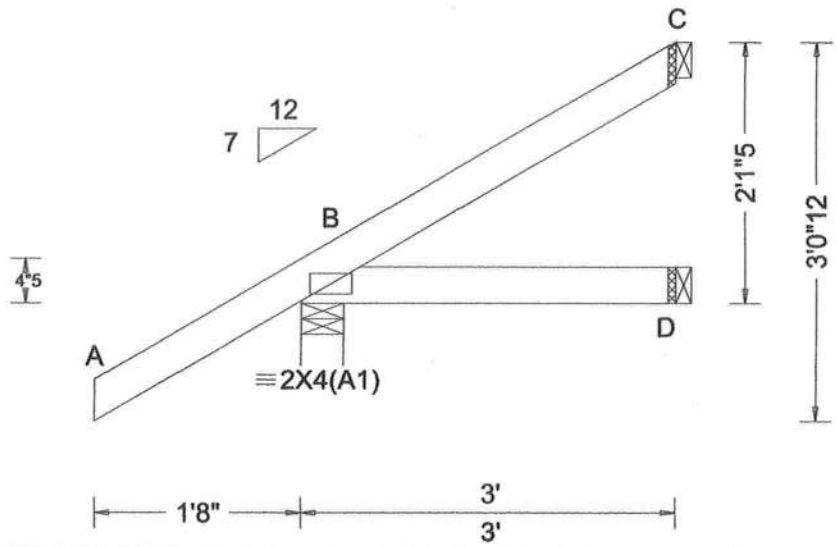

Loading Criteria (psf)	Wind Criteria	Snow Criteria (Pg,Pf in PSF)	Defl/CSI Criteria
TCLL: 20.00	Wind Std: ASCE 7-16	Pg: NA Ct: NA CAT: NA	PP Deflection in loc L/defl L/#
TCDL: 10.00	Speed: 130 mph	Pf: NA Ce: NA	VERT(LL): NA
BCLL: 0.00	Enclosure: Closed	Lu: NA Cs: NA	VERT(CL): NA
BCDL: 10.00	Risk Category: II	Snow Duration: NA	HORZ(LL): 0.001 B - -
Des Ld: 40.00	EXP: C Kzt: NA		HORZ(TL): 0.001 B - -
NCBCLL: 10.00	Mean Height: 15.00 ft	Building Code:	Creep Factor: 2.0
Soffit: 2.00	TCDL: 5.0 psf	FBC 7th Ed. 2020 Res.	Max TC CSI: 0.238
Load Duration: 1.25	BCDL: 5.0 psf	TPI Std: 2014	Max BC CSI: 0.062
Spacing: 24.0 "	MWFRS Parallel Dist: 0 to h/2	Rep Fac: Yes	Max Web CSI: 0.000
	C&C Dist a: 3.00 ft	FT/RT:20(0)/10(0)	
	Loc. from endwall: not in 4.50 ft	Plate Type(s):	
	GCpi: 0.18	WAVE	VIEW Ver: 21.02.01.1214.12
	Wind Duration: 1.60		

▲ Maximum Reactions (lbs)

	Gravity			Non-Gravity		
Loc	R+	/ R-	/ Rh	/ Rw	/ U	/ RL
B	283	/-	/-	/208	/41	/88
D	49	/-	/-	/33	/-	/-
C	59	/-	/-	/37	/37	/-

Wind reactions based on MWFRS
B Brg Wid = 4.0 Min Req = 1.5 (Truss)
D Brg Wid = 1.5 Min Req = -
C Brg Wid = 1.5 Min Req = -
Bearing B is a rigid surface.
Members not listed have forces less than 375#

Lumber

Top chord: 2x4 SP #2;
Bot chord: 2x4 SP #2;

Wind

Wind loads based on MWFRS with additional C&C member design.

Wind loading based on both gable and hip roof types.

Additional Notes

The overall height of this truss excluding overhang is 2-1-5.

COA #0278

05/11/2022

Florida Certificate of Product Approval #FL 1999

****WARNING**** READ AND FOLLOW ALL NOTES ON THIS DRAWING!
****IMPORTANT**** FURNISH THIS DRAWING TO ALL CONTRACTORS INCLUDING THE INSTALLERS

Trusses require extreme care in fabricating, handling, shipping, installing and bracing. Refer to and follow the latest edition of BCSI (Building Component Safety Information, by TPI and SBCA) for safety practices prior to performing these functions. Installers shall provide temporary bracing per BCSI. Unless noted otherwise, top chord shall have properly attached structural sheathing and bottom chord shall have a properly attached rigid ceiling. Locations shown for permanent lateral restraint of webs shall have bracing installed per BCSI sections B3, B7, or B10, as applicable. Apply plates to each face of truss and position as shown above and on the Joint Details, unless noted otherwise. Refer to drawings 160A-Z for standard plate positions. Refer to job's General Notes page for additional information.

Alpine, a division of ITW Building Components Group Inc. shall not be responsible for any deviation from this drawing, any failure to build the truss in conformance with ANSI/TPI 1, or for handling, shipping, installation and bracing of trusses. A seal on this drawing or cover page listing this drawing, indicates acceptance of professional engineering responsibility solely for the design shown. The suitability and use of this drawing for any structure is the responsibility of the Building Designer per ANSI/TPI 1 Sec.2.

For more information see these web sites: Alpine: alpineitw.com; TPI: tpinst.org; SBCA: sbcacomponents.com; ICC: iccsafe.org; AWC: awc.org

ALPINE AN ITW COMPANY
155 Harlem Ave
North Building, 4th Floor
Glenview, IL 60025

SEQN: 656872 JACK FROM: CDM	Ply: 1 Qty: 3	**Job Number:** 22-7559 Judy Baughn **Truss Label:** J03	Cust: R 215 JRef: 1Xff2150006 T11 DrwNo: 131.22.0811.19360 KD / WHK 05/11/2022

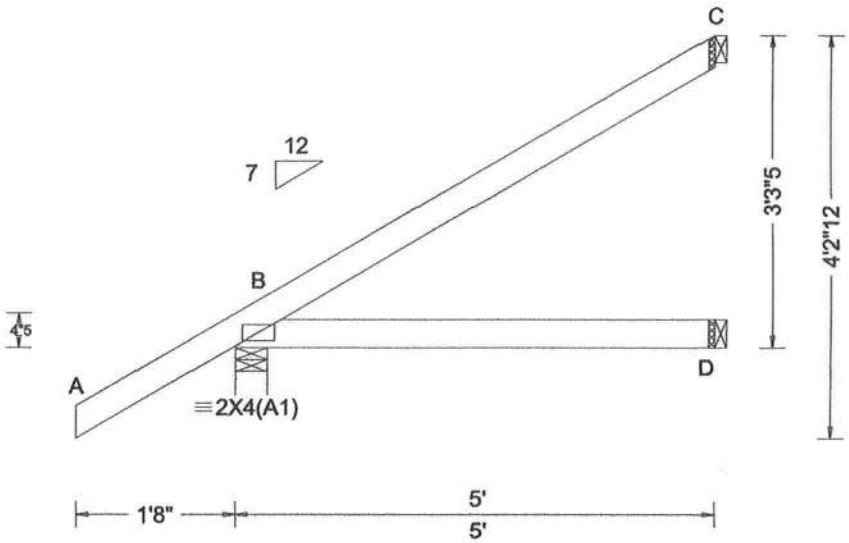

Loading Criteria (psf)	Wind Criteria	Snow Criteria (Pg,Pf in PSF)	Defl/CSI Criteria
TCLL: 20.00 TCDL: 10.00 BCLL: 0.00 BCDL: 10.00 Des Ld: 40.00 NCBCLL: 10.00 Soffit: 2.00 Load Duration: 1.25 Spacing: 24.0 "	Wind Std: ASCE 7-16 Speed: 130 mph Enclosure: Closed Risk Category: II EXP: C Kzt: NA Mean Height: 15.00 ft TCDL: 5.0 psf BCDL: 5.0 psf MWFRS Parallel Dist: 0 to h/2 C&C Dist a: 3.00 ft Loc. from endwall: not in 4.50 ft GCpi: 0.18 Wind Duration: 1.60	Pg: NA Ct: NA CAT: NA Pf: NA Ce: NA Lu: NA Cs: NA Snow Duration: NA Building Code: FBC 7th Ed. 2020 Res. TPI Std: 2014 Rep Fac: Yes FT/RT:20(0)/10(0) Plate Type(s): WAVE	PP Deflection in loc L/defl L/# VERT(LL): NA VERT(CL): NA HORZ(LL): 0.003 B - - HORZ(TL): 0.007 B - - Creep Factor: 2.0 Max TC CSI: 0.318 Max BC CSI: 0.234 Max Web CSI: 0.000 VIEW Ver: 21.02.01.1214.12

▲ Maximum Reactions (lbs)

	Gravity			Non-Gravity		
Loc	R+	/ R-	/ Rh	/ Rw	/ U	/ RL
B	350	/-	/-	/245	/38	/130
D	89	/-	/-	/52	/-	/-
C	127	/-	/-	/81	/71	/-

Wind reactions based on MWFRS
B Brg Wid = 4.0 Min Req = 1.5 (Truss)
D Brg Wid = 1.5 Min Req = -
C Brg Wid = 1.5 Min Req = -
Bearing B is a rigid surface.
Members not listed have forces less than 375#

Lumber

Top chord: 2x4 SP #2;
Bot chord: 2x4 SP #2;

Wind

Wind loads based on MWFRS with additional C&C member design.

Wind loading based on both gable and hip roof types.

Additional Notes

The overall height of this truss excluding overhang is 3-3-5.

WILLIAM H. KRICK
LICENSE
No. 70861
STATE OF FLORIDA
PROFESSIONAL ENGINEER

COA #0278

05/11/2022

Florida Certificate of Product Approval #FL 1999

****WARNING**** READ AND FOLLOW ALL NOTES ON THIS DRAWING!
****IMPORTANT**** FURNISH THIS DRAWING TO ALL CONTRACTORS INCLUDING THE INSTALLERS

Trusses require extreme care in fabricating, handling, shipping, installing and bracing. Refer to and follow the latest edition of BCSI (Building Component Safety Information, by TPI and SBCA) for safety practices prior to performing these functions. Installers shall provide temporary bracing per BCSI. Unless noted otherwise, top chord shall have properly attached structural sheathing and bottom chord shall have a properly attached rigid ceiling. Locations shown for permanent lateral restraint of webs shall have bracing installed per BCSI sections B3, B7, or B10, as applicable. Apply plates to each face of truss and position as shown above and on the Joint Details, unless noted otherwise. Refer to drawings 160A-Z for standard plate positions. Refer to job's General Notes page for additional information.

Alpine, a division of ITW Building Components Group Inc. shall not be responsible for any deviation from this drawing, any failure to build the truss in conformance with ANSI/TPI 1, or for handling, shipping, installation and bracing of trusses. A seal on this drawing or cover page listing this drawing, indicates acceptance of professional engineering responsibility solely for the design shown. The suitability and use of this drawing for any structure is the responsibility of the Building Designer per ANSI/TPI 1 Sec.2.

For more information see these web sites: Alpine: alpineitw.com; TPI: tpinst.org; SBCA: sbcacomponents.com; ICC: iccsafe.org; AWC: awc.org

ALPINE AN ITW COMPANY
155 Harlem Ave
North Building, 4th Floor
Glenview, IL 60025

SEQN: 656817 EJAC FROM: CDM	Ply: 1 Qty: 11	**Job Number:** 22-7559 Judy Baughn **Truss Label:** J04	Cust: R 215 JRef: 1Xff2150006 T32 DrwNo: 131.22.0811.16060 KD / WHK 05/11/2022

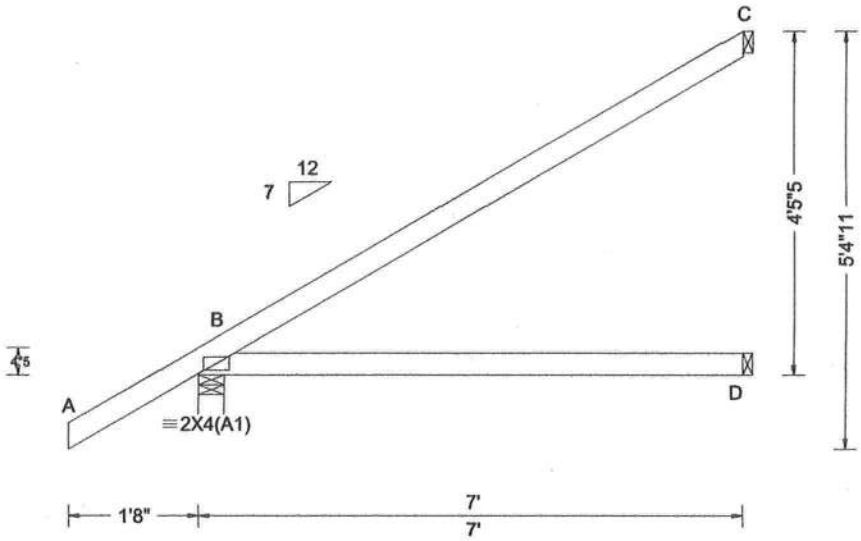

Loading Criteria (psf)
TCLL: 20.00
TCDL: 10.00
BCLL: 0.00
BCDL: 10.00
Des Ld: 40.00
NCBCLL: 10.00
Soffit: 2.00
Load Duration: 1.25
Spacing: 24.0 "

Wind Criteria
Wind Std: ASCE 7-16
Speed: 130 mph
Enclosure: Closed
Risk Category: II
EXP: C Kzt: NA
Mean Height: 15.00 ft
TCDL: 5.0 psf
BCDL: 5.0 psf
MWFRS Parallel Dist: h/2 to h
C&C Dist a: 3.00 ft
Loc. from endwall: not in 4.50 ft
GCpi: 0.18
Wind Duration: 1.60

Snow Criteria (Pg,Pf in PSF)
Pg: NA Ct: NA CAT: NA
Pf: NA Ce: NA
Lu: NA Cs: NA
Snow Duration: NA

Building Code:
FBC 7th Ed. 2020 Res.
TPI Std: 2014
Rep Fac: Yes
FT/RT:20(0)/10(0)
Plate Type(s):
WAVE

Defl/CSI Criteria
PP Deflection in loc L/defl L/#
VERT(LL): NA
VERT(CL): NA
HORZ(LL): 0.013 B - -
HORZ(TL): 0.026 B - -
Creep Factor: 2.0
Max TC CSI: 0.718
Max BC CSI: 0.515
Max Web CSI: 0.000

VIEW Ver: 21.02.01.1214.12

▲Maximum Reactions (lbs)

	Gravity			Non-Gravity		
Loc	R+	/ R-	/ Rh	/ Rw	/ U	/ RL
B	426	/-	/-	/291	/37	/171
D	129	/-	/-	/73	/-	/-
C	188	/-	/-	/123	/102	/-

Wind reactions based on MWFRS
B Brg Wid = 4.0 Min Req = 1.5 (Truss)
D Brg Wid = 1.5 Min Req = -
C Brg Wid = 1.5 Min Req = -
Bearing B is a rigid surface.
Members not listed have forces less than 375#

Lumber

Top chord: 2x4 SP #2;
Bot chord: 2x4 SP #2;

Wind

Wind loads based on MWFRS with additional C&C member design.

Wind loading based on both gable and hip roof types.

Additional Notes

The overall height of this truss excluding overhang is 4-5-5.

WILLIAM H. KRICK
LICENSE
No. 70861
STATE OF
FLORIDA
PROFESSIONAL ENGINEER

COA #0278

06/11/2022

Florida Certificate of Product Approval #FL 1999

****WARNING**** READ AND FOLLOW ALL NOTES ON THIS DRAWING!
****IMPORTANT**** FURNISH THIS DRAWING TO ALL CONTRACTORS INCLUDING THE INSTALLERS

Trusses require extreme care in fabricating, handling, shipping, installing and bracing. Refer to and follow the latest edition of BCSI (Building Component Safety Information, by TPI and SBCA) for safety practices prior to performing these functions. Installers shall provide temporary bracing per BCSI. Unless noted otherwise, top chord shall have properly attached structural sheathing and bottom chord shall have a properly attached rigid ceiling. Locations shown for permanent lateral restraint of webs shall have bracing installed per BCSI sections B3, B7, or B10, as applicable. Apply plates to each face of truss and position as shown above and on the Joint Details, unless noted otherwise. Refer to drawings 160A-Z for standard plate positions. Refer to job's General Notes page for additional information.

Alpine, a division of ITW Building Components Group Inc. shall not be responsible for any deviation from this drawing, any failure to build the truss in conformance with ANSI/TPI 1, or for handling, shipping, installation and bracing of trusses. A seal on this drawing or cover page listing this drawing, indicates acceptance of professional engineering responsibility solely for the design shown. The suitability and use of this drawing for any structure is the responsibility of the Building Designer per ANSI/TPI 1 Sec.2.

For more information see these web sites: Alpine: alpineitw.com; TPI: tpinst.org; SBCA: sbcacomponents.com; ICC: iccsafe.org; AWC: awc.org

ALPINE AN ITW COMPANY
155 Harlem Ave
North Building, 4th Floor
Glenview, IL 60025

SEQN: 656875 EJAC FROM: CDM	Ply: 1 Qty: 2	**Job Number:** 22-7559 Judy Baughn **Truss Label:** J05	Cust: R 215 JRef: 1Xff2150006 T33 DrwNo: 131.22.0811.13483 KD / WHK 05/11/2022

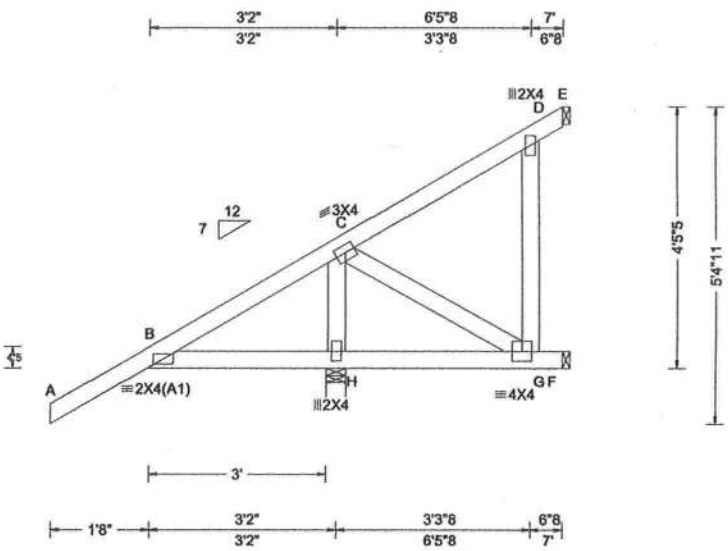

Loading Criteria (psf)

TCLL:	20.00
TCDL:	10.00
BCLL:	0.00
BCDL:	10.00
Des Ld:	40.00
NCBCLL:	10.00
Soffit:	2.00

Load Duration: 1.25
Spacing: 24.0 "

Wind Criteria
Wind Std: ASCE 7-16
Speed: 130 mph
Enclosure: Closed
Risk Category: II
EXP: C Kzt: NA
Mean Height: 15.00 ft
TCDL: 5.0 psf
BCDL: 5.0 psf
MWFRS Parallel Dist: h to 2h
C&C Dist a: 3.00 ft
Loc. from endwall: not in 9.00 ft
GCpi: 0.18
Wind Duration: 1.60

Snow Criteria (Pg,Pf in PSF)
Pg: NA Ct: NA CAT: NA
Pf: NA Ce: NA
Lu: NA Cs: NA
Snow Duration: NA

Building Code:
FBC 7th Ed. 2020 Res.
TPI Std: 2014
Rep Fac: Yes
FT/RT:20(0)/10(0)
Plate Type(s):
WAVE

Defl/CSI Criteria

PP Deflection in	loc	L/defl	L/#
VERT(LL): 0.011	B	999	240
VERT(CL): 0.025	B	999	180
HORZ(LL): -0.004	E	-	-
HORZ(TL): 0.011	D	-	-

Creep Factor: 2.0
Max TC CSI: 0.238
Max BC CSI: 0.108
Max Web CSI: 0.175

VIEW Ver: 21.02.01.1214.12

▲Maximum Reactions (lbs)

	Gravity			Non-Gravity		
Loc	R+	/ R-	/ Rh	/ Rw	/ U	/ RL
H	762	/-	/-	/603	/70	/123
F	64	/-80	/-	/42	/52	/-
E	5	/-64	/-	/49	/63	/-

Wind reactions based on MWFRS
H Brg Wid = 4.0 Min Req = 1.5 (Truss)
F Brg Wid = 1.5 Min Req = -
E Brg Wid = 1.5 Min Req = -
Bearing H is a rigid surface.
Members not listed have forces less than 375#

Maximum Top Chord Forces Per Ply (lbs)

Chords	Tens.	Comp.
B - C	533	-487

Maximum Bot Chord Forces Per Ply (lbs)

Chords	Tens.	Comp.	Chords	Tens.	Comp.
B - H	557	-423	H - G	237	-400

Maximum Web Forces Per Ply (lbs)

Webs	Tens.	Comp.	Webs	Tens.	Comp.
H - C	482	-673	C - G	460	-273

Lumber
Top chord: 2x4 SP #2;
Bot chord: 2x4 SP #2;
Webs: 2x4 SP #3;

Wind
Wind loads based on MWFRS with additional C&C member design.
Left cantilever is exposed to wind
Wind loading based on both gable and hip roof types.

Additional Notes
The overall height of this truss excluding overhang is 4-5-5.

WILLIAM H. KRICK
LICENSE
No. 70861
STATE OF FLORIDA
PROFESSIONAL ENGINEER

COA #0278
05/11/2022
Florida Certificate of Product Approval #FL 1999

****WARNING**** READ AND FOLLOW ALL NOTES ON THIS DRAWING!
****IMPORTANT**** FURNISH THIS DRAWING TO ALL CONTRACTORS INCLUDING THE INSTALLERS

Trusses require extreme care in fabricating, handling, shipping, installing and bracing. Refer to and follow the latest edition of BCSI (Building Component Safety Information, by TPI and SBCA) for safety practices prior to performing these functions. Installers shall provide temporary bracing per BCSI. Unless noted otherwise, top chord shall have properly attached structural sheathing and bottom chord shall have a properly attached rigid ceiling. Locations shown for permanent lateral restraint of webs shall have bracing installed per BCSI sections B3, B7, or B10, as applicable. Apply plates to each face of truss and position as shown above and on the Joint Details, unless noted otherwise. Refer to drawings 160A-Z for standard plate positions. Refer to job's General Notes page for additional information.

Alpine, a division of ITW Building Components Group Inc. shall not be responsible for any deviation from this drawing, any failure to build the truss in conformance with ANSI/TPI 1, or for handling, shipping, installation and bracing of trusses. A seal on this drawing or cover page listing this drawing, indicates acceptance of professional engineering responsibility solely for the design shown. The suitability and use of this drawing for any structure is the responsibility of the Building Designer per ANSI/TPI 1 Sec.2.

For more information see these web sites: Alpine: alpineitw.com; TPI: tpinst.org; SBCA: sbcacomponents.com; ICC: iccsafe.org; AWC: awc.org

ALPINE
AN ITW COMPANY
155 Harlem Ave
North Building, 4th Floor
Glenview, IL 60025

SEQN: 656879 JACK FROM: CDM	Ply: 1 Qty: 1	**Job Number:** 22-7559 Judy Baughn **Truss Label:** J06	Cust: R 215 JRef: 1Xff2150006 T31 DrwNo: 131.22.0811.10740 KD / WHK 05/11/2022

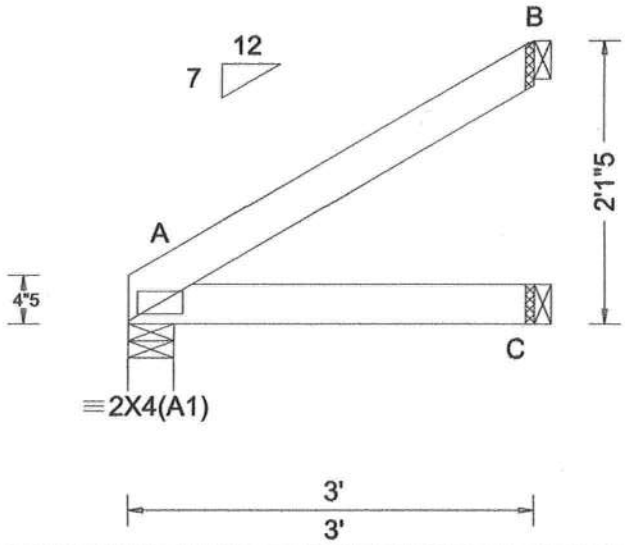

Loading Criteria (psf)

TCLL:	20.00
TCDL:	10.00
BCLL:	0.00
BCDL:	10.00
Des Ld:	40.00
NCBCLL:	10.00
Soffit:	2.00

Load Duration: 1.25
Spacing: 24.0 "

Wind Criteria
Wind Std: ASCE 7-16
Speed: 130 mph
Enclosure: Closed
Risk Category: II
EXP: C Kzt: NA
Mean Height: 15.00 ft
TCDL: 5.0 psf
BCDL: 5.0 psf
MWFRS Parallel Dist: 0 to h/2
C&C Dist a: 3.00 ft
Loc. from endwall: not in 4.50 ft
GCpi: 0.18
Wind Duration: 1.60

Snow Criteria (Pg,Pf in PSF)
Pg: NA Ct: NA CAT: NA
Pf: NA Ce: NA
Lu: NA Cs: NA
Snow Duration: NA

Building Code:
FBC 7th Ed. 2020 Res.
TPI Std: 2014
Rep Fac: Yes
FT/RT:20(0)/10(0)
Plate Type(s):
WAVE

Defl/CSI Criteria
PP Deflection in loc L/defl L/#
VERT(LL): NA
VERT(CL): NA
HORZ(LL): 0.001 A - -
HORZ(TL): 0.003 A - -
Creep Factor: 2.0
Max TC CSI: 0.120
Max BC CSI: 0.080
Max Web CSI: 0.000

VIEW Ver: 21.02.01.1214.12

▲ Maximum Reactions (lbs)

	Gravity			Non-Gravity		
Loc	R+	/ R-	/ Rh	/ Rw	/ U	/ RL
A	131	/-	/-	/81	/-	/60
C	55	/-	/-	/33	/-	/-
B	82	/-	/-	/55	/45	/-

Wind reactions based on MWFRS
A Brg Wid = 4.0 Min Req = 1.5 (Truss)
C Brg Wid = 1.5 Min Req = -
B Brg Wid = 1.5 Min Req = -
Bearing A is a rigid surface.
Members not listed have forces less than 375#

Lumber

Top chord: 2x4 SP #2;
Bot chord: 2x4 SP #2;

Wind

Wind loads based on MWFRS with additional C&C member design.

Wind loading based on both gable and hip roof types.

Additional Notes

The overall height of this truss excluding overhang is 2-1-5.

WILLIAM H. KRICK
LICENSE
No. 70861
STATE OF FLORIDA
PROFESSIONAL ENGINEER

COA #0278

05/11/2022

Florida Certificate of Product Approval #FL 1999

****WARNING**** READ AND FOLLOW ALL NOTES ON THIS DRAWING!
****IMPORTANT**** FURNISH THIS DRAWING TO ALL CONTRACTORS INCLUDING THE INSTALLERS

Trusses require extreme care in fabricating, handling, shipping, installing and bracing. Refer to and follow the latest edition of BCSI (Building Component Safety Information, by TPI and SBCA) for safety practices prior to performing these functions. Installers shall provide temporary bracing per BCSI. Unless noted otherwise, top chord shall have properly attached structural sheathing and bottom chord shall have a properly attached rigid ceiling. Locations shown for permanent lateral restraint of webs shall have bracing installed per BCSI sections B3, B7, or B10, as applicable. Apply plates to each face of truss and position as shown above and on the Joint Details, unless noted otherwise. Refer to drawings 160A-Z for standard plate positions. Refer to job's General Notes page for additional information.

Alpine, a division of ITW Building Components Group Inc. shall not be responsible for any deviation from this drawing, any failure to build the truss in conformance with ANSI/TPI 1, or for handling, shipping, installation and bracing of trusses. A seal on this drawing or cover page listing this drawing, indicates acceptance of professional engineering responsibility solely for the design shown. The suitability and use of this drawing for any structure is the responsibility of the Building Designer per ANSI/TPI 1 Sec.2.

For more information see these web sites: Alpine: alpineitw.com; TPI: tpinst.org; SBCA: sbcacomponents.com; ICC: iccsafe.org; AWC: awc.org

ALPINE AN ITW COMPANY
155 Harlem Ave
North Building, 4th Floor
Glenview, IL 60025

SEQN: 656877 JACK FROM: CDM	Ply: 1 Qty: 1	**Job Number:** 22-7559 Judy Baughn **Truss Label:** J07	Cust: R 215 JRef: 1Xff2150006 T30 DrwNo: 131.22.0811.08660 KD / WHK 05/11/2022

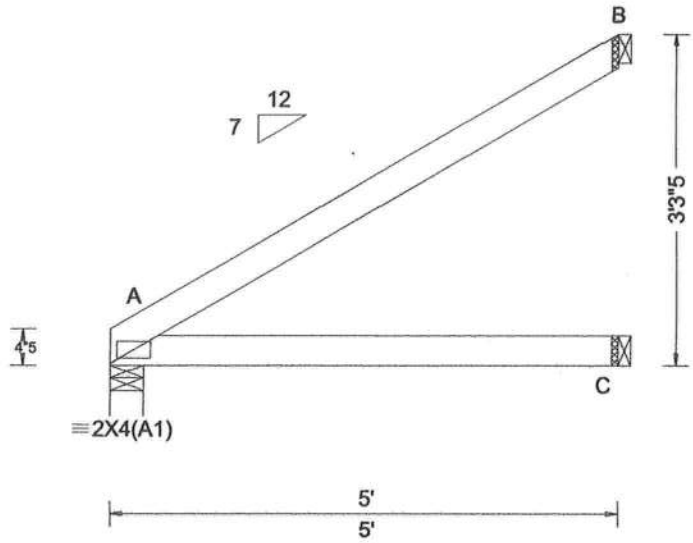

Loading Criteria (psf)	Wind Criteria	Snow Criteria (Pg,Pf in PSF)	Defl/CSI Criteria
TCLL: 20.00 TCDL: 10.00 BCLL: 0.00 BCDL: 10.00 Des Ld: 40.00 NCBCLL: 10.00 Soffit: 2.00 Load Duration: 1.25 Spacing: 24.0 "	Wind Std: ASCE 7-16 Speed: 130 mph Enclosure: Closed Risk Category: II EXP: C Kzt: NA Mean Height: 15.00 ft TCDL: 5.0 psf BCDL: 5.0 psf MWFRS Parallel Dist: 0 to h/2 C&C Dist a: 3.00 ft Loc. from endwall: not in 4.50 ft GCpi: 0.18 Wind Duration: 1.60	Pg: NA Ct: NA CAT: NA Pf: NA Ce: NA Lu: NA Cs: NA Snow Duration: NA Building Code: FBC 7th Ed. 2020 Res. TPI Std: 2014 Rep Fac: Yes FT/RT:20(0)/10(0) Plate Type(s): WAVE	PP Deflection in loc L/defl L/# VERT(LL): NA VERT(CL): NA HORZ(LL): 0.006 A - - HORZ(TL): 0.012 A - - Creep Factor: 2.0 Max TC CSI: 0.373 Max BC CSI: 0.256 Max Web CSI: 0.000 VIEW Ver: 21.02.01.1214.12

▲ Maximum Reactions (lbs)

	Gravity			Non-Gravity		
Loc	R+	/ R-	/ Rh	/ Rw	/ U	/ RL
A	214	/-	/-	/133	/2	/102
C	94	/-	/-	/56	/-	/-
B	140	/-	/-	/93	/75	/-

Wind reactions based on MWFRS
A Brg Wid = 4.0 Min Req = 1.5 (Truss)
C Brg Wid = 1.5 Min Req = -
B Brg Wid = 1.5 Min Req = -
Bearing A is a rigid surface.
Members not listed have forces less than 375#

Lumber

Top chord: 2x4 SP #2;
Bot chord: 2x4 SP #2;

Wind

Wind loads based on MWFRS with additional C&C member design.

Wind loading based on both gable and hip roof types.

Additional Notes

The overall height of this truss excluding overhang is 3-3-5.

WILLIAM H. KRICK
LICENSE
No. 70861
STATE OF FLORIDA
PROFESSIONAL ENGINEER

COA #0278

05/11/2022

Florida Certificate of Product Approval #FL 1999

****WARNING**** READ AND FOLLOW ALL NOTES ON THIS DRAWING!
****IMPORTANT**** FURNISH THIS DRAWING TO ALL CONTRACTORS INCLUDING THE INSTALLERS

Trusses require extreme care in fabricating, handling, shipping, installing and bracing. Refer to and follow the latest edition of BCSI (Building Component Safety Information, by TPI and SBCA) for safety practices prior to performing these functions. Installers shall provide temporary bracing per BCSI. Unless noted otherwise, top chord shall have properly attached structural sheathing and bottom chord shall have a properly attached rigid ceiling. Locations shown for permanent lateral restraint of webs shall have bracing installed per BCSI sections B3, B7, or B10, as applicable. Apply plates to each face of truss and position as shown above and on the Joint Details, unless noted otherwise. Refer to drawings 160A-Z for standard plate positions. Refer to job's General Notes page for additional information.

Alpine, a division of ITW Building Components Group Inc. shall not be responsible for any deviation from this drawing, any failure to build the truss in conformance with ANSI/TPI 1, or for handling, shipping, installation and bracing of trusses. A seal on this drawing or cover page listing this drawing, indicates acceptance of professional engineering responsibility solely for the design shown. The suitability and use of this drawing for any structure is the responsibility of the Building Designer per ANSI/TPI 1 Sec.2.

For more information see these web sites: Alpine: alpineitw.com; TPI: tpinst.org; SBCA: sbcacomponents.com; ICC: iccsafe.org; AWC: awc.org

ALPINE AN ITW COMPANY
155 Harlem Ave
North Building, 4th Floor
Glenview, IL 60025

SEQN: 656825 JACK FROM: CDM	Ply: 1 Qty: 1	**Job Number:** 22-7559 Judy Baughn **Truss Label:** J08	Cust: R 215 JRef: 1Xff2150006 T7 DrwNo: 131.22.0811.06047 KD / WHK 05/11/2022

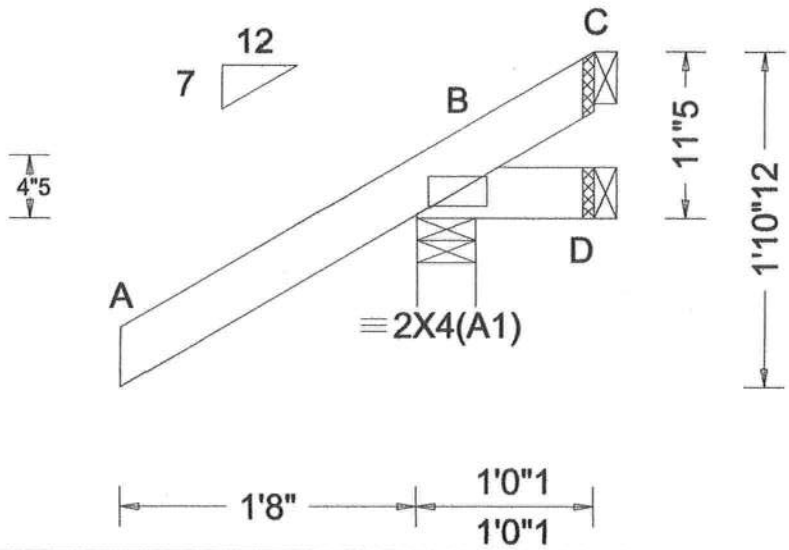

Loading Criteria (psf)
TCLL: 20.00
TCDL: 10.00
BCLL: 0.00
BCDL: 10.00
Des Ld: 40.00
NCBCLL: 10.00
Soffit: 2.00
Load Duration: 1.25
Spacing: 24.0 "

Wind Criteria
Wind Std: ASCE 7-16
Speed: 130 mph
Enclosure: Closed
Risk Category: II
EXP: C Kzt: NA
Mean Height: 15.00 ft
TCDL: 5.0 psf
BCDL: 5.0 psf
MWFRS Parallel Dist: 0 to h/2
C&C Dist a: 3.00 ft
Loc. from endwall: Any
GCpi: 0.18
Wind Duration: 1.60

Snow Criteria (Pg,Pf in PSF)
Pg: NA Ct: NA CAT: NA
Pf: NA Ce: NA
Lu: NA Cs: NA
Snow Duration: NA

Building Code:
FBC 7th Ed. 2020 Res.
TPI Std: 2014
Rep Fac: Yes
FT/RT:20(0)/10(0)
Plate Type(s):
WAVE

Defl/CSI Criteria
PP Deflection in loc L/defl L/#
VERT(LL): NA
VERT(CL): NA
HORZ(LL): -0.000 B - -
HORZ(TL): 0.001 B - -
Creep Factor: 2.0
Max TC CSI: 0.308
Max BC CSI: 0.049
Max Web CSI: 0.000

VIEW Ver: 21.02.01.1214.12

▲ Maximum Reactions (lbs)

	Gravity			Non-Gravity		
Loc	R+	/ R-	/ Rh	/ Rw	/ U	/ RL
B	291	/-	/-	/238	/75	/47
D	2	/-23	/-	/17	/20	/-
C	-	/-72	/-	/42	/70	/-

Wind reactions based on MWFRS
B Brg Wid = 4.0 Min Req = 1.5 (Truss)
D Brg Wid = 1.5 Min Req = -
C Brg Wid = 1.5 Min Req = -
Bearing B is a rigid surface.
Members not listed have forces less than 375#

Lumber

Top chord: 2x4 SP #2;
Bot chord: 2x4 SP #2;

Wind

Wind loads based on MWFRS with additional C&C member design.

Wind loading based on both gable and hip roof types.

Additional Notes

The overall height of this truss excluding overhang is 0-11-5.

WILLIAM H. KRICK
LICENSE
No. 70861
STATE OF FLORIDA
PROFESSIONAL ENGINEER

COA #0278

05/11/2022

Florida Certificate of Product Approval #FL 1999

****WARNING**** READ AND FOLLOW ALL NOTES ON THIS DRAWING!
****IMPORTANT**** FURNISH THIS DRAWING TO ALL CONTRACTORS INCLUDING THE INSTALLERS

Trusses require extreme care in fabricating, handling, shipping, installing and bracing. Refer to and follow the latest edition of BCSI (Building Component Safety Information, by TPI and SBCA) for safety practices prior to performing these functions. Installers shall provide temporary bracing per BCSI. Unless noted otherwise, top chord shall have properly attached structural sheathing and bottom chord shall have a properly attached rigid ceiling. Locations shown for permanent lateral restraint of webs shall have bracing installed per BCSI sections B3, B7, or B10, as applicable. Apply plates to each face of truss and position as shown above and on the Joint Details, unless noted otherwise. Refer to drawings 160A-Z for standard plate positions. Refer to job's General Notes page for additional information.

Alpine, a division of ITW Building Components Group Inc. shall not be responsible for any deviation from this drawing, any failure to build the truss in conformance with ANSI/TPI 1, or for handling, shipping, installation and bracing of trusses. A seal on this drawing or cover page listing this drawing, indicates acceptance of professional engineering responsibility solely for the design shown. The suitability and use of this drawing for any structure is the responsibility of the Building Designer per ANSI/TPI 1 Sec.2.

For more information see these web sites: Alpine: alpineitw.com; TPI: tpinst.org; SBCA: sbcacomponents.com; ICC: iccsafe.org; AWC: awc.org

ALPINE AN ITW COMPANY
155 Harlem Ave
North Building, 4th Floor
Glenview, IL 60025

SEQN: 656827 JACK FROM: CDM	Ply: 1 Qty: 1	**Job Number:** 22-7559 Judy Baughn **Truss Label:** J09	Cust: R 215 JRef: 1Xff2150006 T4 DrwNo: 131.22.0811.04210 KD / WHK 05/11/2022

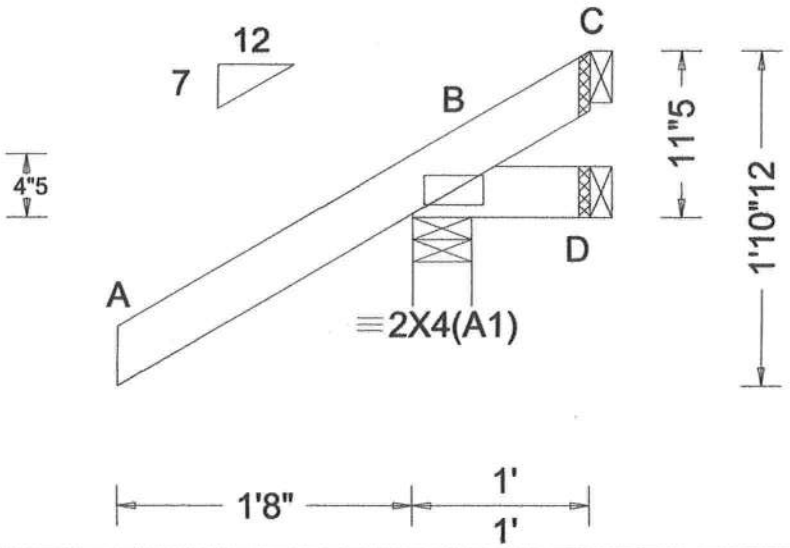

Loading Criteria (psf)
TCLL: 20.00
TCDL: 10.00
BCLL: 0.00
BCDL: 10.00
Des Ld: 40.00
NCBCLL: 10.00
Soffit: 2.00
Load Duration: 1.25
Spacing: 24.0 "

Wind Criteria
Wind Std: ASCE 7-16
Speed: 130 mph
Enclosure: Closed
Risk Category: II
EXP: C Kzt: NA
Mean Height: 15.00 ft
TCDL: 5.0 psf
BCDL: 5.0 psf
MWFRS Parallel Dist: 0 to h/2
C&C Dist a: 3.00 ft
Loc. from endwall: Any
GCpi: 0.18
Wind Duration: 1.60

Snow Criteria (Pg,Pf in PSF)
Pg: NA Ct: NA CAT: NA
Pf: NA Ce: NA
Lu: NA Cs: NA
Snow Duration: NA

Building Code:
FBC 7th Ed. 2020 Res.
TPI Std: 2014
Rep Fac: Yes
FT/RT:20(0)/10(0)
Plate Type(s):
WAVE

Defl/CSI Criteria
PP Deflection in loc L/defl L/#
VERT(LL): NA
VERT(CL): NA
HORZ(LL): -0.000 B - -
HORZ(TL): 0.001 B - -
Creep Factor: 2.0
Max TC CSI: 0.309
Max BC CSI: 0.049
Max Web CSI: 0.000

VIEW Ver: 21.02.01.1214.12

▲ Maximum Reactions (lbs)

	Gravity			Non-Gravity		
Loc	R+	/ R-	/ Rh	/ Rw	/ U	/ RL
B	292	/-	/-	/238	/75	/47
D	2	/-23	/-	/17	/20	/-
C	-	/-72	/-	/42	/71	/-

Wind reactions based on MWFRS
B Brg Wid = 4.0 Min Req = 1.5 (Truss)
D Brg Wid = 1.5 Min Req = -
C Brg Wid = 1.5 Min Req = -
Bearing B is a rigid surface.
Members not listed have forces less than 375#

Lumber

Top chord: 2x4 SP #2;
Bot chord: 2x4 SP #2;

Wind

Wind loads based on MWFRS with additional C&C member design.

Wind loading based on both gable and hip roof types.

Additional Notes

The overall height of this truss excluding overhang is 0-11-5.

COA #0278

05/11/2022

Florida Certificate of Product Approval #FL 1999

****WARNING**** READ AND FOLLOW ALL NOTES ON THIS DRAWING!
****IMPORTANT**** FURNISH THIS DRAWING TO ALL CONTRACTORS INCLUDING THE INSTALLERS

Trusses require extreme care in fabricating, handling, shipping, installing and bracing. Refer to and follow the latest edition of BCSI (Building Component Safety Information, by TPI and SBCA) for safety practices prior to performing these functions. Installers shall provide temporary bracing per BCSI. Unless noted otherwise, top chord shall have properly attached structural sheathing and bottom chord shall have a properly attached rigid ceiling. Locations shown for permanent lateral restraint of webs shall have bracing installed per BCSI sections B3, B7, or B10, as applicable. Apply plates to each face of truss and position as shown above and on the Joint Details, unless noted otherwise. Refer to drawings 160A-Z for standard plate positions. Refer to job's General Notes page for additional information.

Alpine, a division of ITW Building Components Group Inc. shall not be responsible for any deviation from this drawing, any failure to build the truss in conformance with ANSI/TPI 1, or for handling, shipping, installation and bracing of trusses. A seal on this drawing or cover page listing this drawing, indicates acceptance of professional engineering responsibility solely for the design shown. The suitability and use of this drawing for any structure is the responsibility of the Building Designer per ANSI/TPI 1 Sec.2.

For more information see these web sites: Alpine: alpineitw.com; TPI: tpinst.org; SBCA: sbcacomponents.com; ICC: iccsafe.org; AWC: awc.org

ALPINE AN ITW COMPANY
155 Harlem Ave
North Building, 4th Floor
Glenview, IL 60025