DATE 06/03/2010

Columbia County Building Permit

This Permit Must Be Prominently Posted on Premises During Construction

PERMIT
000028623

APPLICANT KEVIN BEDENBAUGH PHONE 386 792-4061

ADDRESS 232 NW CHADLEY LANE LAKE CITY FL 32055

OWNER BRIAN & MELINDA SGANGA PHONE 288-4354

ADDRESS 497 NW GABLES GLEN LAKE CITY FL 32055

CONTRACTOR KEVIN BEDENBAUGH PHONE 755-2422

LOCATION OF PROPERTY 90W, TR LAKE JEFFREY, TL GABLES GLEN, LAST LOT ON LEFT

TYPE DEVELOPMENT SFD,UTILITY ESTIMATED COST OF CONSTRUCTION 175600.00

HEATED FLOOR AREA 2544.00 TOTAL AREA 3512.00 HEIGHT ____ STORIES 1

FOUNDATION CONC WALLS FRAMED ROOF PITCH 6/12 FLOOR SLAB

LAND USE & ZONING A-3 MAX. HEIGHT ____

Minimum Set Back Requirments: STREET-FRONT 30.00 REAR 25.00 SIDE 25.00

NO. EX.D.U. 0 FLOOD ZONE X DEVELOPMENT PERMIT NO. ____

PARCEL ID 06-3S-16-02017-106 SUBDIVISION GABLES

LOT 6 BLOCK ____ PHASE ____ UNIT ____ TOTAL ACRES 4.70

000001822		CGC1516042		
Culvert Permit No.	Culvert Waiver	Contractor's License Number	Applicant/Owner/Contractor	
CULVERT	10-249	BK	HD	Y
Driveway Connection	Septic Tank Number	LU & Zoning checked by	Approved for Issuance	New Resident

COMMENTS: ONE FOOT ABOVE THE ROAD, NOC ON FILE

Check # or Cash 4315

FOR BUILDING & ZONING DEPARTMENT ONLY

Temporary Power ____ date/app. by Foundation ____ date/app. by Monolithic ____ date/app. by (footer/Slab)

Under slab rough-in plumbing ____ date/app. by Slab ____ date/app. by Sheathing/Nailing ____ date/app. by

Framing ____ date/app. by Insulation ____ date/app. by

Rough-in plumbing above slab and below wood floor ____ date/app. by Electrical rough-in ____ date/app. by

Heat & Air Duct ____ date/app. by Peri. beam (Lintel) ____ date/app. by Pool ____ date/app. by

Permanent power ____ date/app. by C.O. Final ____ date/app. by Culvert ____ date/app. by

Pump pole ____ date/app. by Utility Pole ____ date/app. by M/H tie downs, blocking, electricity and plumbing ____ date/app. by

Reconnection ____ date/app. by RV ____ date/app. by Re-roof ____ date/app. by

BUILDING PERMIT FEE $ 880.00 CERTIFICATION FEE $ 17.56 SURCHARGE FEE $ 17.56

MISC. FEES $ 0.00 ZONING CERT. FEE $ 50.00 FIRE FEE $ 0.00 WASTE FEE $ ____

FLOOD DEVELOPMENT FEE $ ____ FLOOD ZONE FEE $ 25.00 CULVERT FEE $ 25.00 **TOTAL FEE** 1015.12

INSPECTORS OFFICE ____ CLERKS OFFICE ____

NOTICE: IN ADDITION TO THE REQUIREMENTS OF THIS PERMIT, THERE MAY BE ADDITIONAL RESTRICTIONS APPLICABLE TO THIS PROPERTY THAT MAY BE FOUND IN THE PUBLIC RECORDS OF THIS COUNTY. AND THERE MAY BE ADDITIONAL PERMITS REQUIRED FROM OTHER GOVERNMENTAL ENTITIES SUCH AS WATER MANAGEMENT DISTRICTS, STATE AGENCIES, OR FEDERAL AGENCIES.

"WARNING TO OWNER: YOUR FAILURE TO RECORD A NOTICE OF COMMENCEMENT MAY RESULT IN YOUR PAYING TWICE FOR IMPROVEMENTS TO YOUR PROPERTY. IF YOU INTEND TO OBTAIN FINANCING, CONSULT WITH YOUR LENDER OR AN ATTORNEY BEFORE RECORDING YOUR NOTICE OF COMMENCEMENT."

EVERY PERMIT ISSUED SHALL BECOME INVALID UNLESS THE WORK AUTHORIZED BY SUCH PERMIT IS COMMENCED WITHIN 180 DAYS AFTER ITS ISSUANCE, OR IF THE WORK AUTHORIZED BY SUCH PERMIT IS SUSPENDED OR ABANDONED FOR A PERIOD OF 180 DAYS AFTER THE TIME THE WORK IS COMMENCED. A VALID PERMIT RECIEVES AN APPROVED INSPECTION EVERY 180 DAYS. WORK SHALL BE CONSIDERED NOT SUSPENDED, ABANDONED OR INVALID WHEN THE PERMIT HAS RECIEVED AN APPROVED INSPECTION WITHIN 180 DAYS OT THE PREVIOUS INSPECTION.

The Issuance of this Permit Does Not Waive Compliance by Permittee with Deed Restrictions.

28623

July 14, 2010

Mr. Randy Jones
Columbia County Building Department

Subject: Finished Floor Elevation
Lot 6 Gables Subdivision
Parcel 06-3S-16-02017-106

Dear Mr. Jones:

I have visited the subject site and looked at the SRWMD construction plans to check the floor elevation of the house being constructed by Plumb Level Construction for Brian Sganga. If the adjacent ground around all sides of the building is graded to direct the runoff around and away from the building and the natural runoff of storm water continues toward the west, there should be no flooding problems associated with the floor elevation of the building.

Sincerely,

Arthur N. Bedenbaugh

Arthur N. Bedenbaugh 7-14-10
FLP.E. #9162
637 SW Hillcrest St.
Lake City, FL 32025

CERTIFICATE OF

OCCUPANCY

COLUMBIA COUNTY, FLORIDA

Department of Building and Zoning Inspection

This Certificate of Occupancy is issued to the below named permit holder for the building and premises at the below named location, and certifies that the work has been completed in accordance with the Columbia County Building Code.

Parcel Number 06-3S-16-02017-106 **Building permit No.** 000028623

Use Classification SFD,UTILITY **Fire:** 6.42

Permit Holder KEVIN BEDENBAUGH **Waste:** 16.75

Owner of Building BRIAN & MELINDA SGANGA **Total:** 23.17

Location: 497 NW GABLES GLEN, LAE CITY, FL

Date: 09/03/2010

Building Inspector

POST IN A CONSPICUOUS PLACE
(Business Places Only)

28623

CORPORATE HEADQUARTERS:

P.O. BOX 5369
116 N.W. 16TH AVENUE
GAINESVILLE, FL 32602-5369

(352) 376-2661
FAX (352) 376-2791

FOUNDED 1949

FLORIDA PEST CONTROL & CHEMICAL CO.
Since 1949

SCIENTIFIC PEST CONTROL DIRECTED BY GRADUATE ENTOMOLOGISTS

Complete Pest Control Service
Member Florida & National Pest Control Associations

Reply to: 536 SE Baya Dr
Lake City, FL 32025
Phone (386) 752-1703 Fax (386) 752-0171

TERMITE TREATMENT CERTIFICATION

Owner: Mr Brian Sganga	Permit Number: 28623
Lot:	Block:
Subdivision: Gables	Street Address: 497 NW Gables Gln
City: Lake City	County: Columbia
General Contractor: Plumb Level Const.	Area Treated: 3512sf
Date: 6-9-10	Time: 1430
Name of applicator: James Parker	Applicator ID Number: JE55238
Product Used: Active Ingredient: % Concentration Premise: Imidacloprid: 0.05%	Number of gallons used: 250
Method of termite prevention treatment: **Soil treatment**	

The building has received a complete treatment for the prevention of subterranean termites. Treatment is in accordance with rules and laws established by the Florida Department of Agriculture and Consumer Services.

This form is proof of complete treatment for Certificate of Occupancy or Closing.

THIS IS PROOF OF WARRANTY

Warranty and Treatment Certifications Have Been Issued.

Authorized Signature:	Date:
Tim Coleman	9-3-10

BRANCHES:

• Crystal River • Daytona Beach • Ft. Walton Beach • Jacksonville South • Jacksonville West • Lake City • Milton • Ocala • Orlando • Palatka • Panama City • Pensacola • Starke • St. Augustine • Tallahassee • Winter Haven • Leesburg • Kissimmee •

COLUMBIA COUNTY BUILDING DEPARTMENT
RESIDENTIAL CHECK LIST REQUIRMENTS

MINIMUM PLAN REQUIREMENTS FOR THE FLORIDA BUILDING CODE RESIDENTIAL 2007 ONE (1) AND TWO (2) FAMILY DWELLINGS

ALL REQUIREMENTS ARE SUBJECT TO CHANGE

ALL BUILDING PLANS MUST INDICATE COMPLIANCE with the Current 2007 FLORIDA BUILDING CODES RESIDENTIAL. ALL PLANS OR DRAWINGS SHALL PROVIDE CALCULATIONS AND DETAILS THAT HAVE THE SEAL AND SIGNATURE OF A CERTIFIED ARCHITECT OR ENGINEER REGISTERED IN THE STATE OF FLORIDA, OR ALTERNATE METHODOLOGIES, APPROVED BY THE STATE OF FLORIDA BUILDING COMMISSION FOR ONE-AND-TWO FAMILY DWELLINGS.

FOR DESIGN PURPOSES THE FOLLOWING BASIC WIND SPEEDS ARE PER FIGURE R301.2(4) of the FLORIDA BUILDING CODES RESIDENTIAL (Florida Wind speed map) **SHALL BE USED.**

WIND SPEED LINE SHALL BE DEFINED AS FOLLOWS: THE CENTERLINE OF INTERSTATE 75.

ALL BUILDINGS CONSTRUCTED EAST OF SAID LINE SHALL BE -------- 100 MPH
ALL BUILDINGS CONSTRUCTED WEST OF SAID LINE SHALL BE --------110 MPH
NO AREA IN COLUMBIA COUNTY IS IN A WIND BORNE DEBRIS REGION

	GENERAL REQUIREMENTS: APPLICANT – PLEASE CHECK ALL APPLICABLE BOXES BEFORE SUBMITTAL			Items to Include- Each Box shall be Circled as Applicable		
				Yes	No	N/A
1	Two (2) complete sets of plans containing the following:			✓		
2	All drawings must be clear, concise, drawn to scale, details that are not used shall be marked void			✓		
3	Condition space (Sq. Ft.)		Total (Sq. Ft.) under roof	IIIIIIII	IIIIIIII	IIIII

Designers name and signature shall be on all documents and a licensed architect or engineer, signature and official embossed seal shall be affixed to the plans and documents as per the FLORIDA BUILDING CODES RESIDENTIAL R101.2.1

Site Plan information including:

4	Dimensions of lot or parcel of land	✓		
5	Dimensions of all building set backs	✓		
6	Location of all other structures (include square footage of structures) on parcel, existing or proposed well and septic tank and all utility easements.	✓		
7	Provide a full legal description of property.	✓		

Wind-load Engineering Summary, calculations and any details required

	GENERAL REQUIREMENTS: APPLICANT – PLEASE CHECK ALL APPLICABLE BOXES BEFORE SUBMITTAL	Items to Include- Each Box shall be Circled as Applicable		
8	Plans or specifications must show compliance with FBCR Chapter 3	IIIIII	IIIII	IIIIII
		YES	NO	N/A
9	Basic wind speed (3-second gust), miles per hour	✓		
10	(Wind exposure – if more than one wind exposure is used, the wind exposure and applicable wind direction shall be indicated)	✓		
11	Wind importance factor and nature of occupancy	✓		
12	The applicable internal pressure coefficient, Components and Cladding	✓		
13	The design wind pressure in terms of psf (kN/m²), to be used for the design of exterior component, cladding materials not specifally designed by the registered design professional.	✓		

Elevations Drawing including:

14	All side views of the structure	✓		
15	Roof pitch	✓		
16	Overhang dimensions and detail with attic ventilation	✓		
17	Location, size and height above roof of chimneys			✓
18	Location and size of skylights with Florida Product Approval			✓
18	Number of stories	✓		
20A	Building height from the established grade to the roofs highest peak		✓	

Floor Plan including:

20	Dimensioned area plan showing rooms, attached garage, breeze ways, covered porches, deck, balconies	✓		
21	Raised floor surfaces located more than 30 inches above the floor or grade			✓
22	All exterior and interior shear walls indicated	✓		
23	Shear wall opening shown (Windows, Doors and Garage doors)	✓		
24	Emergency escape and rescue opening shown in each bedroom (net clear opening shown)	✓		✓
25	Safety glazing of glass where needed	✓		
26	Fireplaces types (gas appliance) (vented or non-vented) or wood burning with Hearth (see chapter 10 of FBCR)			✓
27	Stairs with dimensions (width, tread and riser and total run) details of guardrails, Handrails (see FBCR SECTION 311)			✓
28	Identify accessibility of bathroom (see FBCR SECTION 322)	✓		

All materials placed within opening or onto/into exterior walls, soffits or roofs shall have Florida product approval number and mfg. installation information submitted with the plan (see Florida product approval form)

GENERAL REQUIREMENTS: APPLICANT – PLEASE CHECK ALL APPLICABLE BOXES BEFORE SUBMITTAL	Items to Include- Each Box shall be Circled as Applicable

FBCR 403: Foundation Plans

		YES	NO	N/A
29	Location of all load-bearing walls footings indicated as standard, monolithic, dimensions, size and type of reinforcing.	✓		
30	All posts and/or column footing including size and reinforcing	✓		
31	Any special support required by soil analysis such as piling.	✓		
32	Assumed load-bearing valve of soil 1000 Pound Per Square Foot	✓		
33	Location of horizontal and vertical steel, for foundation or walls (include # size and type)	✓		

FBCR 506: CONCRETE SLAB ON GRADE

34	Show Vapor retarder (6mil. Polyethylene with joints lapped 6 inches and sealed)	✓		
35	Show control joints, synthetic fiber reinforcement or welded fire fabric reinforcement and Supports	✓		

FBCR 320: PROTECTION AGAINST TERMITES

36	Indicate on the foundation plan if soil treatment is used for subterranean termite prevention or submit other approved termite protection methods. **Protection shall be provided by registered termiticides**	✓		

FBCR 606: Masonry Walls and Stem walls (load bearing & shear Walls)

37	Show all materials making up walls, wall height, and Block size, mortar type	✓		
38	Show all Lintel sizes, type, spans and tie-beam sizes and spacing of reinforcement	✓		

Metal frame shear wall and roof systems shall be designed, signed and sealed by Florida Prof. Engineer or Architect

Floor Framing System: First and/or second story

39	Floor truss package shall including layout and details, signed and sealed by Florida Registered Professional Engineer			
40	Show conventional floor joist type, size, span, spacing and attachment to load bearing walls, stem walls and/or priers			
41	Girder type, size and spacing to load bearing walls, stem wall and/or priers			
42	Attachment of joist to girder			
43	Wind load requirements where applicable			
44	Show required under-floor crawl space			
45	Show required amount of ventilation opening for under-floor spaces			
46	Show required covering of ventilation opening			
47	Show the required access opening to access to under-floor spaces			
	Show the sub-floor structural panel sheathing type, thickness and fastener schedule on the edges &			

48	intermediate of the areas structural panel sheathing			
49	Show Draftstopping, Fire caulking and Fire blocking			
50	Show fireproofing requirements for garages attached to living spaces, per FBCR section 309			
51	Provide live and dead load rating of floor framing systems (psf).			

FBCR CHAPTER 6 WOOD WALL FRAMING CONSTRUCTION

	GENERAL REQUIREMENTS: APPLICANT – PLEASE CHECK ALL APPLICABLE BOXES BEFORE SUBMITTAL	Items to Include- Each Box shall be Circled as Applicable		
		YES	NO	N/A
52	Stud type, grade, size, wall height and oc spacing for all load bearing or shear walls	✓		
53	Fastener schedule for structural members per table FBCR 602.3 are to be shown	✓		
54	Show Wood structural panel's sheathing attachment to studs, joist, trusses, rafters and structural members, showing fastener schedule attachment on the edges & intermediate of the areas structural panel sheathing	✓		
55	Show all required connectors with a max uplift rating and required number of connectors and oc spacing for continuous connection of structural walls to foundation and roof trusses or rafter systems	✓		
56	Show sizes, type, span lengths and required number of support jack studs, king studs for shear wall opening and girder or header per FBCR Table 502.5 (1)	✓		
57	Indicate where pressure treated wood will be placed	✓		
58	Show all wall structural panel sheathing, grade, thickness and show fastener schedule for structural panel sheathing edges & intermediate areas	✓		
59	A detail showing gable truss bracing, wall balloon framing details or/ and wall hinge bracing detail	✓		

FBCR :ROOF SYSTEMS:

60	Truss design drawing shall meet section FBCR 802.10 Wood trusses	✓		
61	Include a layout and truss details, signed and sealed by Florida Professional Engineer	✓		
62	Show types of connector's assemblies' and resistance uplift rating for all trusses and rafters	✓		
63	Show gable ends with rake beams showing reinforcement or gable truss and wall bracing details	✓		
64	Provide dead load rating of trusses	✓		

FBCR 802:Conventional Roof Framing Layout

65	Rafter and ridge beams sizes, span, species and spacing			
66	Connectors to wall assemblies' include assemblies' resistance to uplift rating			
67	Valley framing and support details			
68	Provide dead load rating of rafter system			

FBCR Table 602,3(2) & FBCR 803 ROOF SHEATHING

69	Include all materials which will make up the roof decking, identification of structural panel sheathing, grade, thickness	✓		
70	Show fastener Size and schedule for structural panel sheathing on the edges & intermediate areas	✓		

FBCR ROOF ASSEMBLIES FRC Chapter 9

71	Include all materials which will make up the roof assembles covering			
72	Submit Florida Product Approval numbers for each component of the roof assembles covering			

FBCR Chapter 11 Energy Efficiency Code for residential building

Residential construction shall comply with this code by using the following compliance methods in the FBCR chapter11 Residential buildings compliance methods. *Two of the required forms are to be submitted, showing dimensions condition area equal to the total condition living space area*

	GENERAL REQUIREMENTS: APPLICANT – PLEASE CHECK ALL APPLICABLE BOXES BEFORE SUBMITTAL	Items to Include- Each Box shall be Circled as Applicable		
		YES	NO	N/A
73	Show the insulation R value for the following areas of the structure			
74	Attic space			
75	Exterior wall cavity			
76	Crawl space			

HVAC information

77	Submit two copies of a Manual J sizing equipment or equivalent computation study			
78	Exhaust fans locations in bathrooms			
79	Show clothes dryer route and total run of exhaust duct			

Plumbing Fixture layout shown

80	All fixtures waste water lines shall be shown on the foundation plan			
81	Show the location of water heater			

Private Potable Water

82	Pump motor horse power			
83	Reservoir pressure tank gallon capacity			
84	Rating of cycle stop valve if used			

Electrical layout shown including

85	Switches, outlets/receptacles, lighting and all required GFCI outlets identified			
86	Ceiling fans			
87	Smoke detectors & Carbon dioxide detectors			
88	Service panel, sub-panel, location(s) and total ampere ratings			
89	On the electrical plans identify the electrical service overcurrent protection device for the main electrical service. This device shall be installed on the exterior of structures to serve as a disconnecting means for the utility company electrical service. Conductors used from the exterior disconnecting means to a panel or sub panel shall have four-wire conductors, of which one conductor shall be used as an equipment ground. Indicate if the utility company service entrance cable will be of the overhead or underground type.			

90	Appliances and HVAC equipment and disconnects	✓		
91	Arc Fault Circuits (AFCI) in bedrooms	✓		

Disclosure Statement for Owner Builders *If you as the applicant will be acting as an owner/builder under section 489.103(7) of the Florida Statutes, submit the required owner builder disclosure statement form.*

Notice Of Commencement

A notice of commencement form **recorded** in the Columbia County Clerk Office is required to be filed with the building department Before Any Inspections can be preformed.

GENERAL REQUIREMENTS: APPLICANT – PLEASE CHECK ALL APPLICABLE BOXES BEFORE SUBMITTAL	Items to Include- Each Box shall be Circled as Applicable

THE FOLLOWING ITEMS MUST BE SUBMITTED WITH BUILDING PLANS

		YES	NO	N/A
92	**Building Permit Application** A current Building Permit Application form is to be completed and submitted for all residential projects	✓		
93	**Parcel Number** The parcel number (Tax ID number) from the Property Appraiser (386) 758-1084 is required. A copy of property deed is also requested	✓		
94	**Environmental Health Permit or Sewer Tap Approval** A copy of a approved Columbia County Environmental Health (386) 758-1058	✓		
95	**City of Lake City** A permit showing an approved waste water sewer tap			✓
96	**Toilet facilities shall be provided for all construction sites**	✓		
97	**Town of Fort White** (386) 497-2321 If the parcel in the application for building permit is within the Corporate city limits of Fort White an approval land use development letter issued by the Town of Fort is required to be submitted with the application for a building permit.			✓
98	**Flood Information:** All projects within the Floodway of the Suwannee or Santa Fe Rivers shall require permitting through the Suwannee River Water Management District, before submitting a application to this office. Any project located within a flood zone where the base flood elevation (100 year flood) has been established shall meet the requirements of Section 8.5.2 of the Columbia County Land Development Regulations. Any project located within a flood zone where the base flood elevation has not been established (Zone A) shall meet the requirements of Section 8.5.3 of the Columbia County Land Development Regulations			✓
99	CERTIFIED FINISHED FLOOR ELEVATIONS will be required on any project where the base flood elevation (100 year flood) has been established			
100	A development permit will also be required. Development permit cost is **$50.00**			
101	**Driveway Connection:** If the property does not have an existing access to a public road, then an application for a culvert permit (**$25.00**) must be made. If the applicant feels that a culvert is not needed, they may apply for a culvert waiver (**$50.00**). All culvert waivers are sent to the Columbia County Public Works Department for approval or denial.	✓		
102	**911 Address:** If the project is located in an area where a 911 address has not been issued, then application for a 911address must be applied for and **received** through the Columbia County Emergency Management Office of 911 Addressing Department (386) 758-1125	✓		

Section R101.2.1 of the Florida Building Code Residential:

The provisions of Chapter 1, Florida Building Code, Building shall govern the administration and enforcement of the Florida Building Code, Residential.

Section 105 of the Florida Building Code defines the:

Time limitation of application.

An application for a permit for any proposed work shall be deemed to have been abandoned 180 days after the date of filing, unless such application has been pursued in good faith or a permit has been issued; except that the building official is authorized to grant one or more extensions of time for additional periods not exceeding 90 days each. The extension shall be requested in writing and justifiable cause demonstrated.

Single-family residential dwelling.

Section 105.3.4 A building permit for a single-family residential dwelling must be issued within 30 working days of application therefor unless unusual circumstances require a longer time for processing the applicati or unless the permit application fails to satisfy the Florida Building Code or the enforcing agency's laws or ordinances.

Permit intent.

Section 105.4.1: A permit issued shall be constructed to be a license to proceed with the work and not as authority to violate, cancel, alter or set aside any of the provisions of the technical codes, nor shall issuance a permit prevent the building official from thereafter requiring a correction of errors in plans, construction or violations of this code. Every permit issued shall become invalid unless the work authorized by such permit is commenced within six months after its issuance, or if the work authorized by such permit is suspended or abandoned for a period of six months after the time the work is commenced.

If work has commenced.

Section 105.4.1.1: If work has commenced and the permit is revoked, becomes null and void, or expires because of lack of progress or abandonment, a new permit covering the proposed construction shall be obtained before proceeding with the work.

New Permit.

Section 105.4.1.2: If a new permit is not obtained within 180 days from the date the initial permit became nu and void, the building official is authorized to require that any work which has been commenced or completed be removed from the building site. Alternately, a new permit may be issued on application, providing the work in place and required to complete the structure meets all applicable regulations in effect at the time the initial permit became null and void and any regulations which may have become effective between the date of expiration and the date if issuance of the new permit.

Work Shall Be:

Section 105.4.1.3: Work shall be considered to be in active progress when the permit has received an approved inspection within 180 days. This provision shall not be applicable in case of civil commotion or strike or when the building work is halted due directly to judicial injunction, order or similar process.

The Fee:

Section 105.4.1.4: The fee for renewal reissuance and extension of a permit shall be set forth by the administrative authority.

When the submitted application is approved for permitting the applican will be notified by phone as to the date and time a building permit will b prepared and issued by the Columbia County Building & Zoning Department

Location: Project Name:

As required by Florida Statute 553.842 and Florida Administrative Code 9B-72, please provide the information and t product approval number(s) on the building components listed below if they will be utilized on the construction proje which you are applying for a building permit on or after April 1, 2004. We recommend you contact your local produ supplier should you not know the product approval number for any of the applicable listed products. More informati about statewide product approval can be obtained at www.floridabuilding.org

Category/Subcategory	Manufacturer	Product Description	Approval Numb
A. EXTERIOR DOORS			FL 4242 -
1. Swinging			
2. Sliding			
3. Sectional			
4. Roll up			
5. Automatic			
6. Other			
B. WINDOWS			
1. Single hung			FL. 5108
2. Horizontal Slider			FL. 5451
3. Casement			
4. Double Hung			
5. Fixed			FL. 5418
6. Awning			
7. Pass -through			
8. Projected			
9. Mullion			
10. Wind Breaker			
11 Dual Action			
12. Other			
C. PANEL WALL			
1. Siding			FL. 889-R
2. Soffits			FL 4899
3. EIFS			
4. Storefronts			
5. Curtain walls			
6. Wall louver			
7. Glass block			
8. Membrane			FL 3820-R1
9. Greenhouse			
10. Other			
D. ROOFING PRODUCTS			
1. Asphalt Shingles			FL. 586-R2
2. Underlayments			FL 1814-R1
3. Roofing Fasteners			
4. Non-structural Metal Rf			FL 7518.1
5. Built-Up Roofing			
6. Modified Bitumen			
7. Single Ply Roofing Sys			
8. Roofing Tiles			
9. Roofing Insulation			
10. Waterproofing			
11. Wood shingles /shakes			
12. Roofing Slate			

Subcategory (cont.)	Manufacturer	Product Description	Approval Number(s
Liquid Applied Roof Sys			
Cements-Adhesives – Coatings			FL. 1960-R.
15. Roof Tile Adhesive			
16. Spray Applied Polyurethane Roof			
17. Other			
E. SHUTTERS			
1. Accordion			
2. Bahama			
3. Storm Panels			
4. Colonial			
5. Roll-up			
6. Equipment			
7. Others			
F. SKYLIGHTS			
1. Skylight			FL 451-R1
2. Other			
G. STRUCTURAL COMPONENTS			
1. Wood connector/anchor			FL. 474-R1
2. Truss plates			
3. Engineered lumber			FL 1008-R1
4. Railing			
5. Coolers-freezers			
6. Concrete Admixtures			
7. Material			
8. Insulation Forms			
9. Plastics			
10. Deck-Roof			
11. Wall			
12. Sheds			
13. Other			
H. NEW EXTERIOR ENVELOPE PRODUCTS			
1.			
2.			

The products listed below did not demonstrate product approval at plan review. I understand that at the time of inspection of these products, the following information must be available to the inspector on the jobsite; 1) copy of the product approval, 2) the performance characteristics which the product was tested and certified to comply with, 3) copy of the applicable manufacturers installation requirements.

I understand these products may have to be removed if approval cannot be demonstrated during inspection

Contractor or Contractor's Authorized Agent Signature

Print Name

Date

Location

Permit # (FOR STAFF USE ONLY)

A & B Well Drilling, Inc.

5673 NW Lake Jeffery Road
Lake City, FL, 32055
(O) 386-758-3409
(F) 386-758-3410
(C) 386-623-3151

5/21/2010

To: Columbia **County Building Department**

Description of well to be installed for Customer: Sganga
Located at Address: NW Gables Way

1 hp 15 GPM Submersible Pump, 1 ¼" drop pipe, 86 gallon captive tank and back flow prevention, With SRWMD permit.

Bruce Park

Sincerely
Bruce Park
President

STATE OF FLORIDA
DEPARTMENT OF HEALTH
APPLICATION FOR ONSITE SEWAGE DISPOSAL SYSTEM CONSTRUCTION PERMIT

Permit Application Number 10-0249

Sganga ---------- PART II - SITEPLAN ----------

Scale: 1 Inch = ~~50 feet~~ 100ft

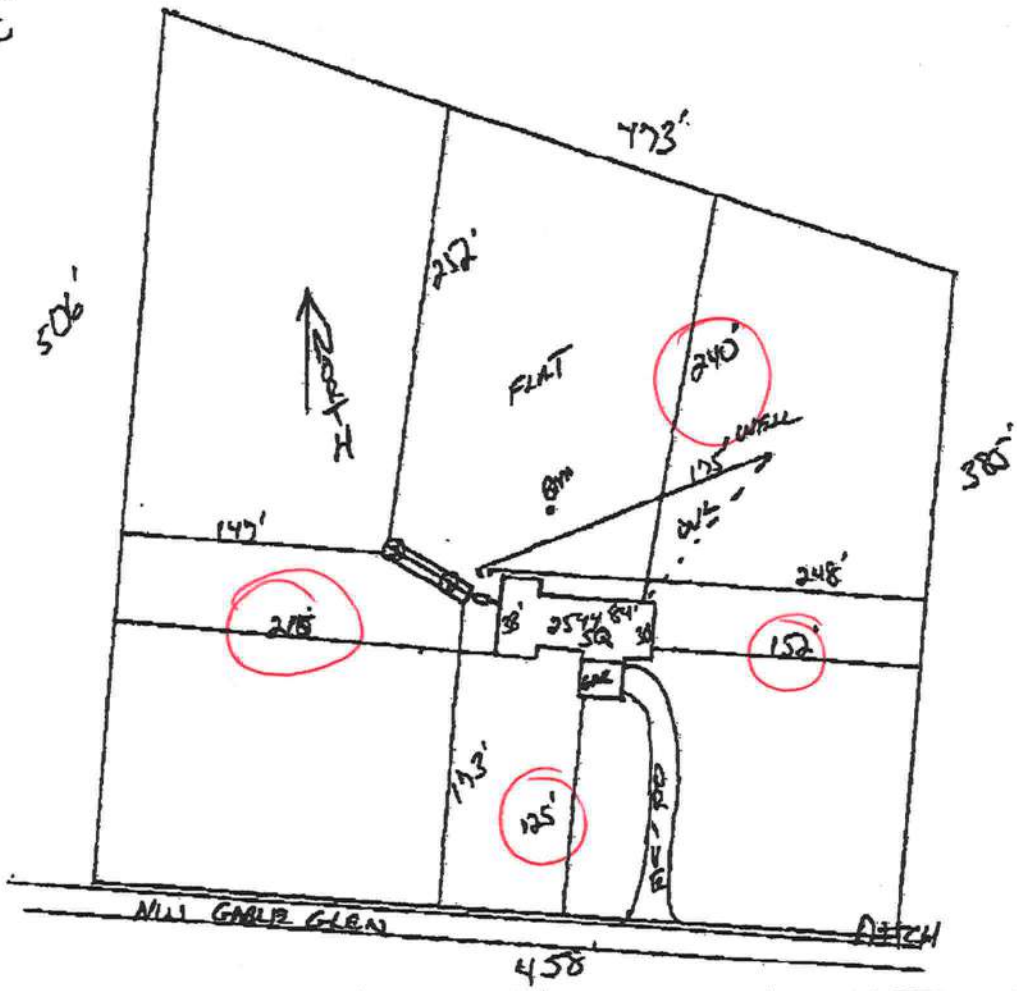

Notes: _____

Site Plan submitted by: Rod Bell

MASTER CONTRACTOR

Plan Approved X Not Approved

Date 5/12/10

By _____ Columbia CHD County Health Department

ALL CHANGES MUST BE APPROVED BY THE COUNTY HEALTH DEPARTMENT

SF

10-0247

STATE OF FLORIDA
DEPARTMENT OF HEALTH
ONSITE SEWAGE TREATMENT AND DISPOSAL SYSTEM
APPLICATION FOR CONSTRUCTION PERMIT

PERMIT NO. 9605437
DATE PAID: 5/13/10
FEE PAID: 910.00
RECEIPT #: 1216824

APPLICATION FOR:
[X] New System [ ] Existing System [ ] Holding Tank [ ] Innovative
[ ] Repair [ ] Abandonment [ ] Temporary [ ] _____

APPLICANT: Brian Spanga

AGENT: ROCKY FORD, A & B CONSTRUCTION TELEPHONE: 386-497-2311

MAILING ADDRESS: P.O. BOX 39 FT. WHITE, FL, 32038

TO BE COMPLETED BY APPLICANT OR APPLICANT'S AUTHORIZED AGENT. SYSTEMS MUST BE CONSTRUCTED BY A PERSON LICENSED PURSUANT TO 489.105(3)(m) OR 489.552, FLORIDA STATUTES. IT IS THE APPLICANT'S RESPONSIBILITY TO PROVIDE DOCUMENTATION OF THE DATE THE LOT WAS CREATED OR PLATTED (MM/DD/YY) IF REQUESTING CONSIDERATION OF STATUTORY GRANDFATHER PROVISIONS.

PROPERTY INFORMATION

LOT: 6 BLOCK: na SUB: Gables PLATTED: '07

PROPERTY ID #: 06-3S-16-02017-106 ZONING: Res. I/M OR EQUIVALENT: [Y / (N)]

PROPERTY SIZE: 4.7 ACRES WATER SUPPLY: [X] PRIVATE PUBLIC [ ]<=2000GPD [ ]>2000GPD

IS SEWER AVAILABLE AS PER 381.0065, FS? [Y (N)] DISTANCE TO SEWER: — FT

PROPERTY ADDRESS: NW Gables Glen, LC, FL, 32055

DIRECTIONS TO PROPERTY: Lake Jeffery (CR 250) West, Cross I-75, TL on NW Gambles Glen, 6th lot on left (last lot on left before Cul-de-sac)

BUILDING INFORMATION [X] RESIDENTIAL [ ] COMMERCIAL

Unit No	Type of Establishment	No. of Bedrooms	Building Area Sqft	Commercial/Institutional System Design Table 1, Chapter 64E-6, FAC
1	SF Residential	3	2544	
2				
3				

[N] Floor/Equipment Drains [N] Other (Specify) _____

SIGNATURE: Rocky D Ford DATE: 5/12/2010

STATE OF FLORIDA
DEPARTMENT OF HEALTH
ONSITE SEWAGE TREATMENT AND DISPOSAL SYSTEM

PERMIT #: 12-SC-1143589
APPLICATION #: AP965437
DATE PAID: 5/13/10
FEE PAID: 310.00
RECEIPT #: 12682416
DOCUMENT #: PR810517

CONSTRUCTION PERMIT FOR: OSTDS New

APPLICANT: BRIAN 10-0249N SGANGA

PROPERTY ADDRESS: NW GABLES Gln Lake City, FL 32055

LOT: 6 BLOCK: SUBDIVISION: GABLES

PROPERTY ID #: 02017-106 [SECTION, TOWNSHIP, RANGE, PARCEL NUMBER] [OR TAX ID NUMBER]

SYSTEM MUST BE CONSTRUCTED IN ACCORDANCE WITH SPECIFICATIONS AND STANDARDS OF SECTION 381.0065, F.S., AND CHAPTER 64E-6, F.A.C. DEPARTMENT APPROVAL OF SYSTEM DOES NOT GUARANTEE SATISFACTORY PERFORMANCE FOR ANY SPECIFIC PERIOD OF TIME. ANY CHANGE IN MATERIAL FACTS, WHICH SERVED AS A BASIS FOR ISSUANCE OF THIS PERMIT, REQUIRE THE APPLICANT TO MODIFY THE PERMIT APPLICATION. SUCH MODIFICATIONS MAY RESULT IN THIS PERMIT BEING MADE NULL AND VOID. ISSUANCE OF THIS PERMIT DOES NOT EXEMPT THE APPLICANT FROM COMPLIANCE WITH OTHER FEDERAL, STATE, OR LOCAL PERMITTING REQUIRED FOR DEVELOPMENT OF THIS PROPERTY.

SYSTEM DESIGN AND SPECIFICATIONS

T [1,050] GALLONS / GPD Septic CAPACITY
A [ ] GALLONS / GPD N/A CAPACITY
N [ ] GALLONS GREASE INTERCEPTOR CAPACITY [MAXIMUM CAPACITY SINGLE TANK:1250 GALLONS]
K [ ] GALLONS DOSING TANK CAPACITY [ ]GALLONS @[ ]DOSES PER 24 HRS #Pumps [ ]

D [500] SQUARE FEET Drainfield SYSTEM
R [ ] SQUARE FEET N/A SYSTEM
A TYPE SYSTEM: [X] STANDARD [ ] FILLED [ ] MOUND [ ]
I CONFIGURATION: [X] TRENCH [ ] BED [ ]
N
F LOCATION OF BENCHMARK: Nail in large oak NE of site.
I ELEVATION OF PROPOSED SYSTEM SITE [24.00] [INCHES / FT] [ABOVE / BELOW] BENCHMARK/REFERENCE POINT
E BOTTOM OF DRAINFIELD TO BE [46.00] [INCHES / FT] [ABOVE / BELOW] BENCHMARK/REFERENCE POINT
L
D FILL REQUIRED: [0.00] INCHES EXCAVATION REQUIRED: [0] INCHES

O
T
H
E
R

The licensed contractor installing the system is responsible for installing the minimum category of tank in accordance with s. 64E-6.013(3)(f), FAC.

911 Address shall be required before final approval.

SPECIFICATIONS BY: Rocky Ford TITLE: Master Contractor

APPROVED BY: [signature] TITLE: Environmental Specialist I Columbia CHD

DATE ISSUED: 05/17/2010 EXPIRATION DATE: 11/17/2011

DH 4016, 08/09 (Obsolates all previous editions which may not be used)
Incorporated: 64E-6.003, FAC

v 1.1.4 AP965437 SE017250

SF

This Instrument Prepared By:
Michael H. Harrell
Abstract & Title Services, Inc.
PO Box 7175
Lake City, Florida 32055
ATS# 2-17774

Inst:200912019663 Date:11/24/2009 Time:2:06 PM
Doc Stamp-Deed:315.00
DC,P Bevitt Ciason,Columbia County Page 1 of 1 B:1184 P:2064

GENERAL WARRANTY DEED

Individual to Individual (or Corporation/LLC)

This Warranty Deed made this 23rd day of November, 2009 by

Daniel Crapps

hereinafter called the Grantor, to

Brian J. Spangs, and his wife, Melinda D. Spangs

whose post office address is PO Box 714, Lake City, FL 32056, hereinafter called the Grantee.

(Wherever used herein the terms "Grantor" and "Grantee" include all the parties to this instrument and the heirs, legal representatives and assigns of Individuals, and the successors and assigns of Corporation.)

The Grantor, for and in consideration of the sum of $10.00 and other valuable considerations, receipt whereof is hereby acknowledged, hereby grants, bargains, sells, unto the Grantee all that certain land, situate in Columbia County, Florida, viz: TAX ID: R02017-106 :

Lot 6, Gables Subdivision, a subdivision according to the plat thereof, as recorded in Plat Book 9, Pages 37-38, Public Records of Columbia County, Florida.

The above described property is not nor has it ever been the Homestead of the Grantor who in fact resides at 2707 130th Terrace, Wellborn FL 32094.

Together with all the tenements, hereditaments, and appurtenances thereto belonging or in anyways appertaining.

To have and to hold, the same in fee simple forever.

And the Grantor hereby covenants with said Grantee that the Grantor is lawfully seized of said land in fee simple; that the Grantor has good right and lawful authority to sell and convey said land, and hereby warrants the title to said land and will defend the same against the lawful claims of all persons whomsoever; and that said land is free of all encumbrances except taxes accruing subsequent to December 31, 2008.

In witness whereof, the said Grantor has signed and sealed these presents the day and year first above written.

WITNESS
Printed Name: Lisa Hicks

Daniel Crapps

WITNESS
Printed Name: Raymond J. Ward

State of Florida
County of Columbia

I hereby certify that on this 23rd day of November, 2009, before me, an officer duly authorized to administer oaths and take acknowledgements, personally appeared Daniel Crapps, who is personally known to me or produced a _____ for identification, and known to me to be the person described in and who executed the foregoing instrument, who acknowledged before me that he/she/they executed the same, and an oath was not taken.

(SEAL)

NOTARY PUBLIC

My Commission Expires: 8-23-10

VERA USA HICKS
Notary Public, State of Florida
My Comm. Expires Aug. 23, 2010
Comm. No. DD 568090

ITW Building Components Group, Inc.

1950 Marley Drive Haines City, FL 33844
Florida Engineering Certificate of Authorization Number: 0 278
Florida Certificate of Product Approval # FL1999
 Document ID:1U1V215-Z0117102255

Truss Fabricator: W.B. Howland
Job Identification: 6623B-/SGANGA RESIDENCE /Plumb Level Construction -- , **
Truss Count: 12
Model Code: Florida Building Code 2007 and 2009 Supplement
Truss Criteria: FBC2007Res/TPI-2002(STD)
Engineering Software: Alpine Software,Version 9.02.
Structural Engineer of Record: The identity of the structural EOR did not exist as of
Address: the seal date per section 61G15-31.003(5a) of the FAC
Minimum Design Loads: Roof - 40.0 PSF @ 1.25 Duration
Floor - N/A
Wind - 110 MPH ASCE 7-05 -Closed

Seal Date: 05/17/2010

-Truss Design Engineer-
William H. Krick
Florida License Number: 70861
1950 Marley Drive
Haines City, FL 33844

Notes:

1. Determination as to the suitability of these truss components for the structure is the responsibility of the building designer/engineer of record, as defined in ANSI/TPI 1
2. The drawing date shown on this index sheet must match the date shown on the individual truss component drawing.
3. As shown on attached drawings; the drawing number is preceded by: HCUSR215

Details: BRCLBSUB-A1101505-GBLLETIN-

#	Ref Description	Drawing#	Date
1	67371--A1	10137001	05/17/10
2	67372--A2	10137002	05/17/10
3	67373--A3	10137003	05/17/10
4	67374--A4	10137004	05/17/10
5	67375--A5	10137005	05/17/10
6	67376--A6	10137006	05/17/10
7	67377--A7	10137007	05/17/10
8	67378--A8	10137008	05/17/10
9	67379--A9	10137009	05/17/10
10	67380--A10	10137010	05/17/10
11	67381--A11	10137011	05/17/10
12	67382--A12	10137012	05/17/10

Top chord 2x4 SP #2 N
Bot chord 2x4 SP #2 N
Webs 2x4 SP #2 N

Roof overhang supports 2.00 psf soffit load.

Bottom chord checked for 10.00 psf non-concurrent live load.

The overall height of this truss excluding overhang is 7-11-11.

110 mph wind, 15.00 ft mean hgt, ASCE 7-05, PART._ENC. bldg, not located within 4.50 ft from roof edge, CAT II, EXP C, wind TC DL=5.0 psf, wind BC DL=5.0 psf. Iw=1.00 GCpi(+/-)=0.55

Wind reactions based on MWFRS pressures.

Deflection meets L/240 live and L/180 total load.

MWFRS loads based on trusses located at least 15.00 ft. from roof edge.

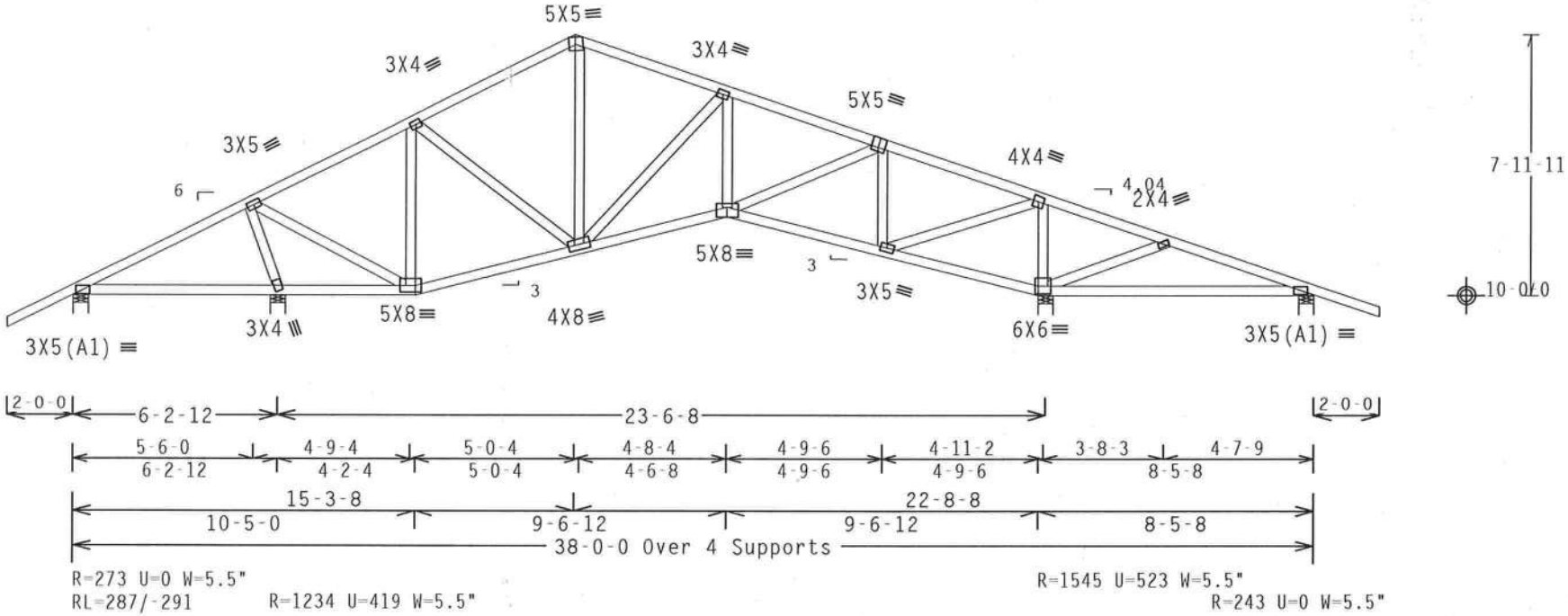

Design Crit: FBC2007Res/TPI-2002(STD)

PLT TYP. Wave FT/RT=20%(0%)/10(0) 9.02.03.0 QTY:12 FL/-/5/-/-/R/- Scale =.1875"/Ft.

ALPINE
ITW Building Components Group Inc.
Haines City, FL 33844
FL COA #0 278

WARNING TRUSSES REQUIRE EXTREME CARE IN FABRICATION, HANDLING, SHIPPING, INSTALLING AND BRACING. REFER TO BCSI (BUILDING COMPONENT SAFETY INFORMATION), PUBLISHED BY TPI (TRUSS PLATE INSTITUTE, 218 NORTH LEE STREET, SUITE 312, ALEXANDRIA, VA, 22314) AND WICA (WOOD TRUSS COUNCIL OF AMERICA, 6300 ENTERPRISE LANE, MADISON, WI 53719) FOR SAFETY PRACTICES PRIOR TO PERFORMING THESE FUNCTIONS. UNLESS OTHERWISE INDICATED TOP CHORD SHALL HAVE PROPERLY ATTACHED STRUCTURAL PANELS AND BOTTOM CHORD SHALL HAVE A PROPERLY ATTACHED RIGID CEILING.

IMPORTANT FURNISH A COPY OF THIS DESIGN TO THE INSTALLATION CONTRACTOR. ITW BCG, INC. SHALL NOT BE RESPONSIBLE FOR ANY DEVIATION FROM THIS DESIGN; ANY FAILURE TO BUILD THE TRUSS IN CONFORMANCE WITH TPI; OR FABRICATING, HANDLING, SHIPPING, INSTALLING & BRACING OF TRUSSES.
DESIGN CONFORMS WITH APPLICABLE PROVISIONS OF NDS (NATIONAL DESIGN SPEC. BY AF&PA) AND TPI. ITW BCG CONNECTOR PLATES ARE MADE OF 20/18/16GA (W,H/SS/K) ASTM A653 GRADE 40/60 (W, K/H,SS) GALV. STEEL. APPLY PLATES TO EACH FACE OF TRUSS AND, UNLESS OTHERWISE LOCATED ON THIS DESIGN, POSITION PER DRAWINGS 160A-Z. ANY INSPECTION OF PLATES FOLLOWED BY (1) SHALL BE PER ANNEX A3 OF TPI1-2002 SEC.3. A SEAL ON THIS DRAWING INDICATES ACCEPTANCE OF PROFESSIONAL ENGINEERING RESPONSIBILITY SOLELY FOR THE TRUSS COMPONENT DESIGN SHOWN. THE SUITABILITY AND USE OF THIS COMPONENT FOR ANY BUILDING IS THE RESPONSIBILITY OF THE BUILDING DESIGNER PER ANSI/TPI 1 SEC. 2.

WILLIAM H. KRICK LICENSE No.7086 STATE OF FLORIDA PROFESSIONAL ENGINEER
May 17 '10

TC LL	20.0 PSF	REF	R215-- 67371
TC DL	10.0 PSF	DATE	05/17/10
BC DL	10.0 PSF	DRW	HCUSR215 10137001
BC LL	0.0 PSF	HC-ENG	KD/WHK
TOT.LD.	40.0 PSF	SEQN-	263762
DUR.FAC.	1.25	FROM	CGN
SPACING	24.0"	JREF-	1U1V215_Z01

(6623B-/SGANGA RESIDENCE /Plumb Level Construction -- , ** - A2)

Top chord 2x4 SP #2 N
Bot chord 2x4 SP #2 N
Webs 2x4 SP #2 N

Roof overhang supports 2.00 psf soffit load.

(A) Continuous lateral bracing equally spaced on member.

Bottom chord checked for 10.00 psf non-concurrent live load.

The overall height of this truss excluding overhang is 7-11-11.

110 mph wind, 15.00 ft mean hgt, ASCE 7-05, CLOSED bldg, Located anywhere in roof, CAT II, EXP C, wind TC DL=5.0 psf, wind BC DL=5.0 psf. Iw=1.00 GCpi(+/-)=0.18

Wind reactions based on MWFRS pressures.

Truss passed check for 20 psf additional bottom chord live load in areas with 42"-high x 24"-wide clearance.

Deflection meets L/240 live and L/180 total load.

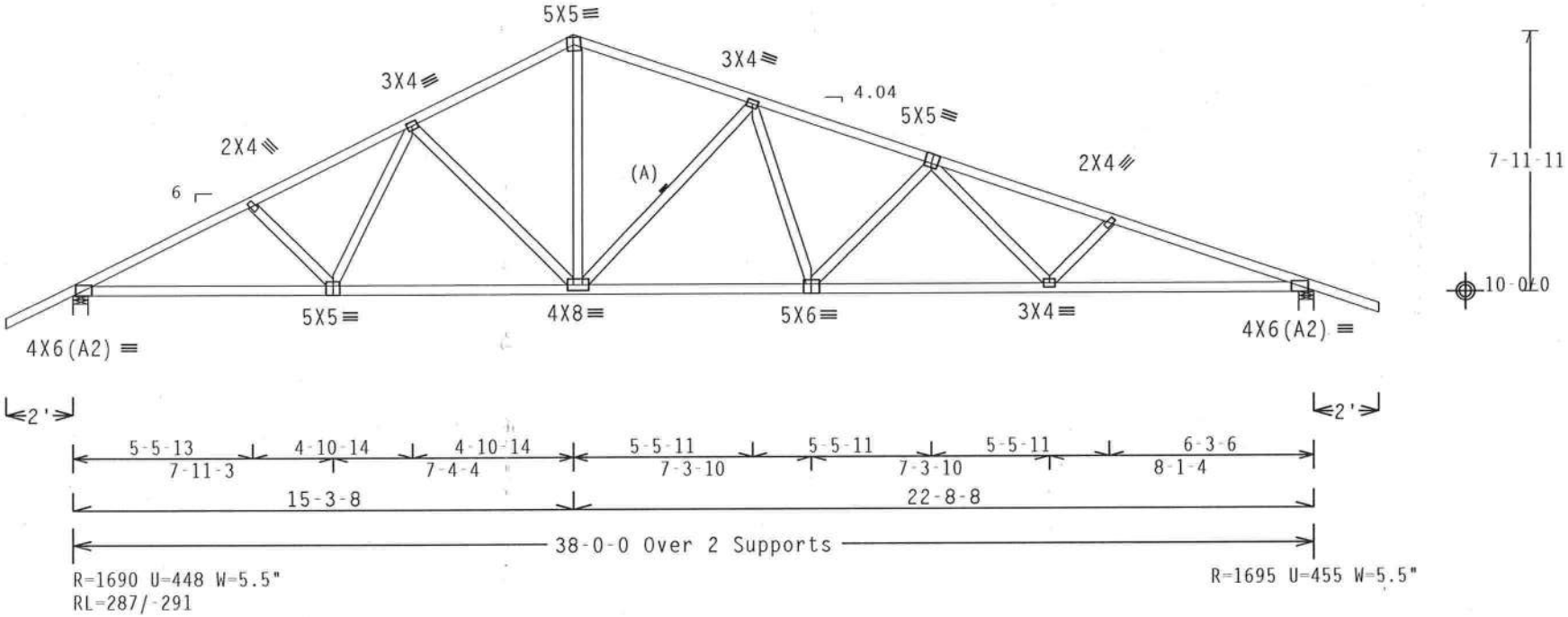

Design Crit: FBC2007Res/TPI-2002(STD)

PLT TYP. Wave | FT/RT=20%(0%)/10(0) | 9.02.03.0 | QTY:10 FL/-/5/-/-/R/- | Scale =.1875"/Ft.

ALPINE
ITW Building Components Group Inc.
Haines City, FL 33844
FL COA #0 278

WARNING TRUSSES REQUIRE EXTREME CARE IN FABRICATION, HANDLING, SHIPPING, INSTALLING AND BRACING. REFER TO BCSI (BUILDING COMPONENT SAFETY INFORMATION), PUBLISHED BY TPI (TRUSS PLATE INSTITUTE, 218 NORTH LEE STREET, SUITE 312, ALEXANDRIA, VA, 22314) AND WTCA (WOOD TRUSS COUNCIL OF AMERICA, 6300 ENTERPRISE LANE, MADISON, WI 53719) FOR SAFETY PRACTICES PRIOR TO PERFORMING THESE FUNCTIONS. UNLESS OTHERWISE INDICATED TOP CHORD SHALL HAVE PROPERLY ATTACHED STRUCTURAL PANELS AND BOTTOM CHORD SHALL HAVE A PROPERLY ATTACHED RIGID CEILING.

IMPORTANT FURNISH A COPY OF THIS DESIGN TO THE INSTALLATION CONTRACTOR. ITW BCG, INC. SHALL NOT BE RESPONSIBLE FOR ANY DEVIATION FROM THIS DESIGN; ANY FAILURE TO BUILD THE TRUSS IN COMFORMANCE WITH TPI; OR FABRICATING, HANDLING, SHIPPING, INSTALLING & BRACING OF TRUSSES. DESIGN CONFORMS WITH APPLICABLE PROVISIONS OF NDS (NATIONAL DESIGN SPEC, BY AF&PA) AND TPI. ITW BCG CONNECTOR PLATES ARE MADE OF 20/18/16GA (W,H/SS/K) ASTM A653 GRADE 40/60 (W, K/H,SS) GALV. STEEL. APPLY PLATES TO EACH FACE OF TRUSS AND, UNLESS OTHERWISE LOCATED ON THIS DESIGN, POSITION PER DRAWINGS 160A-Z. ANY INSPECTION OF PLATES FOLLOWED BY (1) SHALL BE PER ANNEX A3 OF TPI1-2002 SEC.3. A SEAL ON THIS DRAWING INDICATES ACCEPTANCE OF PROFESSIONAL ENGINEERING RESPONSIBILITY SOLELY FOR THE TRUSS COMPONENT DESIGN SHOWN. THE SUITABILITY AND USE OF THIS COMPONENT FOR ANY BUILDING IS THE RESPONSIBILITY OF THE BUILDING DESIGNER PER ANSI/TPI 1 SEC. 2.

WILLIAM H. KRICK LICENSE No. 70366 STATE OF FLORIDA PROFESSIONAL ENGINEER
May 17 '10

TC LL	20.0 PSF	REF	R215-- 67372
TC DL	10.0 PSF	DATE	05/17/10
BC DL	10.0 PSF	DRW	HCUSR215 10137002
BC LL	0.0 PSF	HC-ENG	KD/WHK *
TOT.LD.	40.0 PSF	SEQN-	263819
DUR.FAC.	1.25	FROM	CGN
SPACING	24.0"	JREF-	1U1V215_Z01

(6623B-/SGANGA RESIDENCE /Plumb Level Construction -- , ** - A3)

Top chord 2x4 SP #2 N
Bot chord 2x4 SP #2 N
Webs 2x4 SP #2 N

Truss spaced at 24.0" OC designed to support 2-0-0 top chord outlookers. Cladding load shall not exceed 0.00 PSF. Top chord must not be cut or notched.

Truss passed check for 20 psf additional bottom chord live load in areas with 42"-high x 24"-wide clearance.

The overall height of this truss excluding overhang is 7-7-14.

THE BUILDING DESIGNER IS RESPONSIBLE FOR THE DESIGN OF THE ROOF AND CEILING DIAPHRAGMS, GABLE END SHEAR WALLS, AND SUPPORTING SHEAR WALLS. SHEAR WALLS MUST PROVIDE CONTINUOUS LATERAL RESTRAINT TO THE GABLE END. ALL CONNECTIONS TO BE DESIGNED BY THE BUILDING DESIGNER.

110 mph wind, 15.00 ft mean hgt, ASCE 7-05, CLOSED bldg, Located anywhere in roof, CAT II, EXP C, wind TC DL=5.0 psf, wind BC DL=5.0 psf. Iw=1.00 GCpi(+/-)=0.18

Wind reactions based on MWFRS pressures.

See DWGS A11015050109 & GBLLETIN0109 for more requirements.

Bottom chord checked for 10.00 psf non-concurrent live load.

Deflection meets L/240 live and L/180 total load.

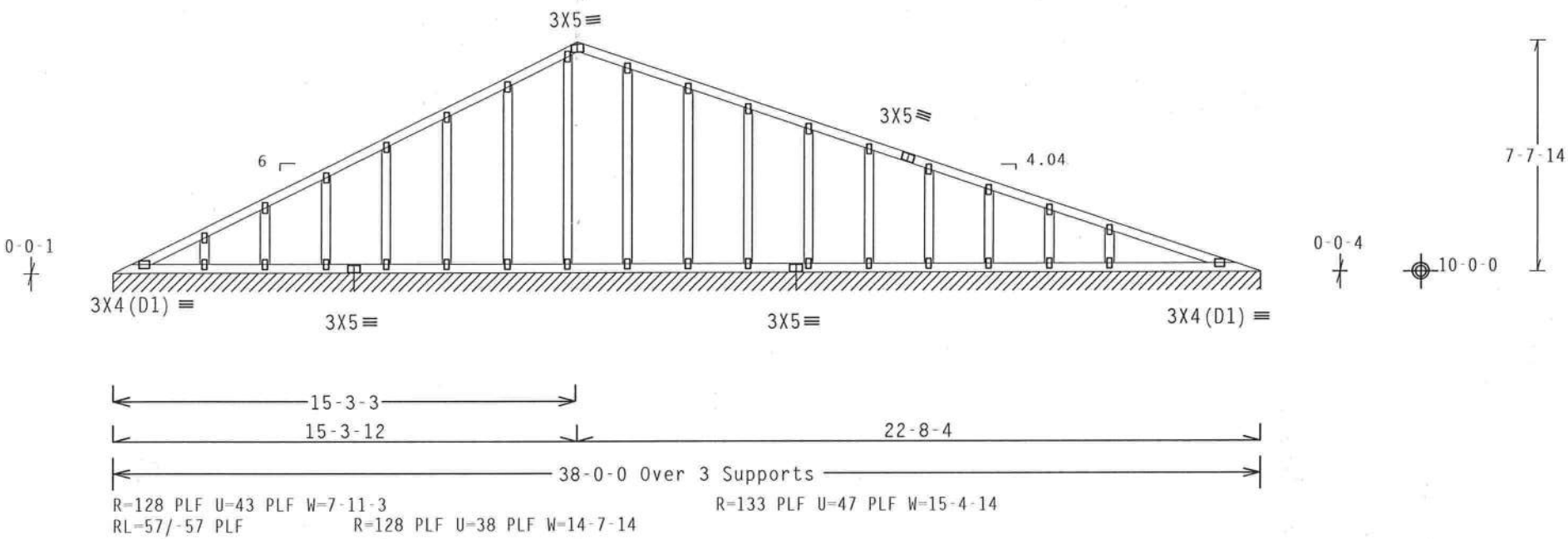

Note: All Plates Are 2X4 Except As Shown.

Design Crit: FBC2007Res/TPI-2002(STD)

PLT TYP. Wave | FT/RT=20%(0%)/10(0) | 9.02.03.00 | QTY:1 | FL/-/5/-/-/R/- | Scale =.1875"/Ft.

ALPINE
ITW Building Components Group Inc.
Haines City, FL 33844
FL COA #0 278

WARNING TRUSSES REQUIRE EXTREME CARE IN FABRICATION, HANDLING, SHIPPING, INSTALLING AND BRACING. REFER TO BCSI (BUILDING COMPONENT SAFETY INFORMATION), PUBLISHED BY TPI (TRUSS PLATE INSTITUTE, 218 NORTH LEE STREET, SUITE 312, ALEXANDRIA, VA, 22314) AND WTCA (WOOD TRUSS COUNCIL OF AMERICA, 6300 ENTERPRISE LANE, MADISON, WI 53719) FOR SAFETY PRACTICES PRIOR TO PERFORMING THESE FUNCTIONS. UNLESS OTHERWISE INDICATED TOP CHORD SHALL HAVE PROPERLY ATTACHED STRUCTURAL PANELS AND BOTTOM CHORD SHALL HAVE A PROPERLY ATTACHED RIGID CEILING.

IMPORTANTFURNISH A COPY OF THIS DESIGN TO THE INSTALLATION CONTRACTOR. ITW BCG, INC. SHALL NOT BE RESPONSIBLE FOR ANY DEVIATION FROM THIS DESIGN; ANY FAILURE TO BUILD THE TRUSS IN CONFORMANCE WITH TPI; OR FABRICATING, HANDLING, SHIPPING, INSTALLING & BRACING OF TRUSSES. DESIGN CONFORMS WITH APPLICABLE PROVISIONS OF NDS (NATIONAL DESIGN SPEC. BY AF&PA) AND TPI. ITW BCG CONNECTOR PLATES ARE MADE OF 20/18/16GA (W.H/SS/K) ASTM A653 GRADE 40/60 (W. K/H.SS) GALV. STEEL. APPLY PLATES TO EACH FACE OF TRUSS AND, UNLESS OTHERWISE LOCATED ON THIS DESIGN, POSITION PER DRAWINGS 160A-Z. ANY INSPECTION OF PLATES FOLLOWED BY (1) SHALL BE PER ANNEX A3 OF TPI1-2002 SEC.3. A SEAL ON THIS DRAWING INDICATES ACCEPTANCE OF PROFESSIONAL ENGINEERING RESPONSIBILITY SOLELY FOR THE TRUSS COMPONENT DESIGN SHOWN. THE SUITABILITY AND USE OF THIS COMPONENT FOR ANY BUILDING IS THE RESPONSIBILITY OF THE BUILDING DESIGNER PER ANSI/TPI 1 SEC. 2.

WILLIAM H. KRICK LICENSE No. 70861 STATE OF FLORIDA PROFESSIONAL ENGINEER
May 17 '10

TC LL	20.0 PSF	REF R215-- 67373
TC DL	10.0 PSF	DATE 05/17/10
BC DL	10.0 PSF	DRW HCUSR215 10137003
BC LL	0.0 PSF	HC-ENG KD/WHK
TOT.LD.	40.0 PSF	SEQN- 263823
DUR.FAC.	1.25	FROM CGN
SPACING	24.0"	JREF- 1U1V215_Z01

(6623B-/SGANGA RESIDENCE /Plumb Level Construction -- , ** - A4)

Top chord 2x4 SP #2 N
Bot chord 2x4 SP #2 N
Webs 2x4 SP #2 N

Bottom chord checked for 10.00 psf non-concurrent live load.

Deflection meets L/240 live and L/180 total load.

MWFRS loads based on trusses located at least 30.00 ft. from roof edge.

110 mph wind, 15.00 ft mean hgt, ASCE 7-05, PART._ENC. bldg, not located within 4.50 ft from roof edge, CAT II, EXP C, wind TC DL=5.0 psf, wind BC DL=5.0 psf. Iw=1.00 GCpi(+/-)=0.55

Wind reactions based on MWFRS pressures.

The overall height of this truss excluding overhang is 7-11-11.

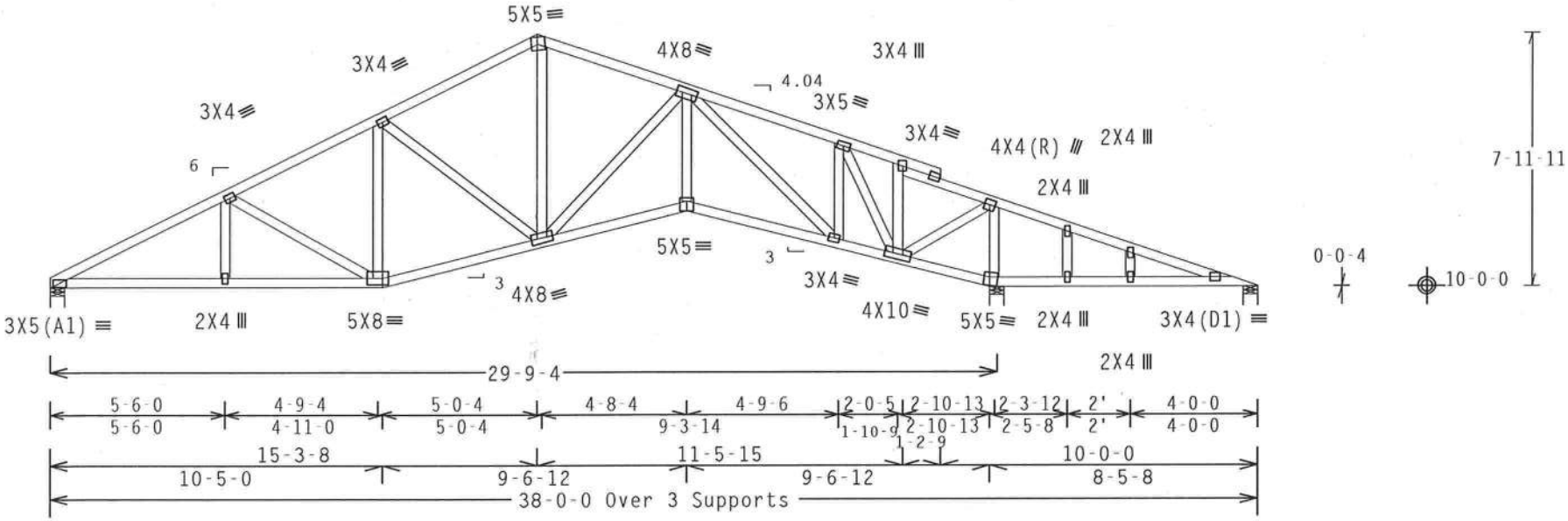

R=1090 U=323 W=5.5"
RL=235/-229

R=1950 U=553 W=5.5"
R=0 Rw=36 U=0 W=5.5"

Design Crit: FBC2007Res/TPI-2002(STD)

PLT TYP. Wave | FT/RT=20%(0%)/10(0) | 9.02.03.0610 | QTY:1 | FL/-/5/-/-/R/- | Scale =.1875"/Ft.

ALPINE
ITW Building Components Group Inc.
Haines City, FL 33844
FL COA #0 278

WARNING TRUSSES REQUIRE EXTREME CARE IN FABRICATION, HANDLING, SHIPPING, INSTALLING AND BRACING. REFER TO BCSI (BUILDING COMPONENT SAFETY INFORMATION), PUBLISHED BY TPI (TRUSS PLATE INSTITUTE, 218 NORTH LEE STREET, SUITE 312, ALEXANDRIA, VA, 22314) AND WTCA (WOOD TRUSS COUNCIL OF AMERICA, 6300 ENTERPRISE LANE, MADISON, WI 53719) FOR SAFETY PRACTICES PRIOR TO PERFORMING THESE FUNCTIONS. UNLESS OTHERWISE INDICATED TOP CHORD SHALL HAVE PROPERLY ATTACHED STRUCTURAL PANELS AND BOTTOM CHORD SHALL HAVE A PROPERLY ATTACHED RIGID CEILING.

IMPORTANT FURNISH A COPY OF THIS DESIGN TO THE INSTALLATION CONTRACTOR. ITW BCG, INC. SHALL NOT BE RESPONSIBLE FOR ANY DEVIATION FROM THIS DESIGN; ANY FAILURE TO BUILD THE TRUSS IN CONFORMANCE WITH TPI; OR FABRICATING, HANDLING, SHIPPING, INSTALLING & BRACING OF TRUSSES. DESIGN CONFORMS WITH APPLICABLE PROVISIONS OF NDS (NATIONAL DESIGN SPEC, BY AF&PA) AND TPI. ITW BCG CONNECTOR PLATES ARE MADE OF 20/18/16GA (W,H/SS/K) ASTM A653 GRADE 40/60 (W, K/H,SS) GALV. STEEL. APPLY PLATES TO EACH FACE OF TRUSS AND, UNLESS OTHERWISE LOCATED ON THIS DESIGN, POSITION PER DRAWINGS 160A-Z. ANY INSPECTION OF PLATES FOLLOWED BY (I) SHALL BE PER ANNEX A3 OF TPI1-2002 SEC.3. A SEAL ON THIS DRAWING INDICATES ACCEPTANCE OF PROFESSIONAL ENGINEERING RESPONSIBILITY SOLELY FOR THE TRUSS COMPONENT DESIGN SHOWN. THE SUITABILITY AND USE OF THIS COMPONENT FOR ANY BUILDING IS THE RESPONSIBILITY OF THE BUILDING DESIGNER PER ANSI/TPI 1 SEC. 2.

WILLIAM H. KRICK LICENSED No. 70861 STATE OF FLORIDA PROFESSIONAL ENGINEER
May 17, 10

TC LL	20.0 PSF	REF	R215-- 67374
TC DL	10.0 PSF	DATE	05/17/10
BC DL	10.0 PSF	DRW	HCUSR215 10137004
BC LL	0.0 PSF	HC-ENG	KD/WHK
TOT.LD.	40.0 PSF	SEQN-	263811
DUR.FAC.	1.25	FROM	CGN
SPACING	24.0"	JREF-	1U1V215_Z01

(6623B-/SGANGA RESIDENCE /Plumb Level Construction -- , ** - A5)

Top chord 2x4 SP #2 N
Bot chord 2x4 SP #2 N
Webs 2x4 SP #2 N

Roof overhang supports 2.00 psf soffit load.

Bottom chord checked for 10.00 psf non-concurrent live load.

The overall height of this truss excluding overhang is 7-11-11.

110 mph wind, 15.00 ft mean hgt, ASCE 7-05, PART._ENC. bldg, not located within 4.50 ft from roof edge, CAT II, EXP C, wind TC DL=5.0 psf, wind BC DL=5.0 psf. Iw=1.00 GCpi(+/-)=0.55

Wind reactions based on MWFRS pressures.

Deflection meets L/240 live and L/180 total load.

MWFRS loads based on trusses located at least 30.00 ft. from roof edge.

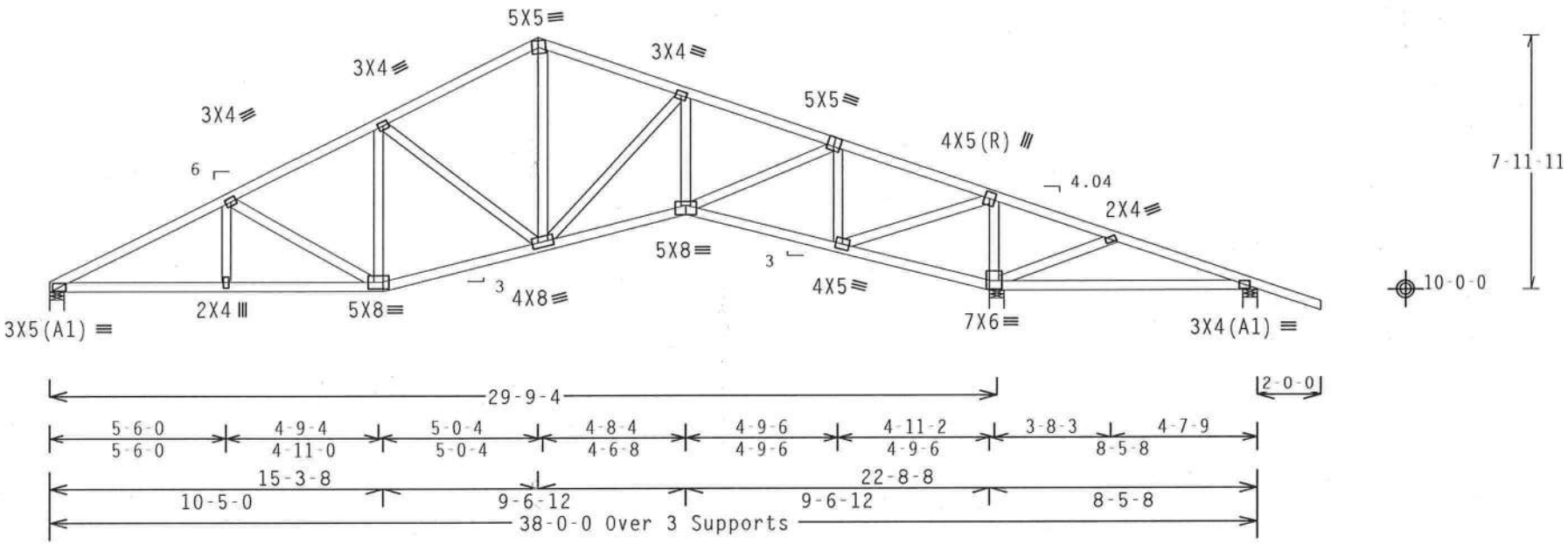

Design Crit: FBC2007Res/TPI-2002(STD)

PLT TYP. Wave | FT/RT=20%(0%)/10(0) | 9.02.03.0 | QTY:3 | FL/-/5/-/-/R/- | Scale =.1875"/Ft.

ALPINE
ITW Building Components Group Inc.
Haines City, FL 33844
FL COA #0 278

WARNING TRUSSES REQUIRE EXTREME CARE IN FABRICATION, HANDLING, SHIPPING, INSTALLING AND BRACING. REFER TO BCSI (BUILDING COMPONENT SAFETY INFORMATION), PUBLISHED BY TPI (TRUSS PLATE INSTITUTE, 218 NORTH LEE STREET, SUITE 312, ALEXANDRIA, VA, 22314) AND WTCA (WOOD TRUSS COUNCIL OF AMERICA, 6300 ENTERPRISE LANE, MADISON, WI 53719) FOR SAFETY PRACTICES PRIOR TO PERFORMING THESE FUNCTIONS. UNLESS OTHERWISE INDICATED TOP CHORD SHALL HAVE PROPERLY ATTACHED STRUCTURAL PANELS AND BOTTOM CHORD SHALL HAVE A PROPERLY ATTACHED RIGID CEILING.

IMPORTANT FURNISH A COPY OF THIS DESIGN TO THE INSTALLATION CONTRACTOR. ITW BCG, INC. SHALL NOT BE RESPONSIBLE FOR ANY DEVIATION FROM THIS DESIGN; ANY FAILURE TO BUILD THE TRUSS IN CONFORMANCE WITH TPI; OR FABRICATING, HANDLING, SHIPPING, INSTALLING & BRACING OF TRUSSES. DESIGN CONFORMS WITH APPLICABLE PROVISIONS OF NDS (NATIONAL DESIGN SPEC. BY AF&PA) AND TPI. ITW BCG CONNECTOR PLATES ARE MADE OF 20/18/16GA (W,H/SS/K) ASTM A653 GRADE 40/60 (W, K/H,SS) GALV. STEEL. APPLY PLATES TO EACH FACE OF TRUSS AND, UNLESS OTHERWISE LOCATED ON THIS DESIGN, POSITION PER DRAWINGS 160A-Z. ANY INSPECTION OF PLATES FOLLOWED BY (I) SHALL BE PER ANNEX A3 OF TPI1-2002 SEC.3. A SEAL ON THIS DRAWING INDICATES ACCEPTANCE OF PROFESSIONAL ENGINEERING RESPONSIBILITY SOLELY FOR THE TRUSS COMPONENT DESIGN SHOWN. THE SUITABILITY AND USE OF THIS COMPONENT FOR ANY BUILDING IS THE RESPONSIBILITY OF THE BUILDING DESIGNER PER ANSI/TPI 1 SEC. 2.

WILLIAM H. KRICK LICENSE No. 70361 STATE OF FLORIDA PROFESSIONAL ENGINEER
May 17 '10

TC LL	20.0 PSF	REF	R215-- 67375
TC DL	10.0 PSF	DATE	05/17/10
BC DL	10.0 PSF	DRW	HCUSR215 10137005
BC LL	0.0 PSF	HC-ENG	KD/WHK
TOT.LD.	40.0 PSF	SEQN-	263766
DUR.FAC.	1.25	FROM	CGN
SPACING	24.0"	JREF-	1U1V215_Z01

(6623B-/SGANGA RESIDENCE /Plumb Level Construction -- , ** - A6)

Top chord 2x4 SP #2 N
Bot chord 2x4 SP #2 N
Webs 2x4 SP #2 N

Roof overhang supports 2.00 psf soffit load.

Calculated horizontal deflection is 0.16" due to live load and 0.15" due to dead load.

Deflection meets L/240 live and L/180 total load.

MWFRS loads based on trusses located at least 30.00 ft. from roof edge.

110 mph wind, 15.00 ft mean hgt, ASCE 7-05, CLOSED bldg, not located within 4.50 ft from roof edge, CAT II, EXP C, wind TC DL=5.0 psf, wind BC DL=5.0 psf. Iw=1.00 GCpi(+/-)=0.18

Wind reactions based on MWFRS pressures.

(A) Continuous lateral bracing equally spaced on member.

Bottom chord checked for 10.00 psf non-concurrent live load.

The overall height of this truss excluding overhang is 7-9-15.

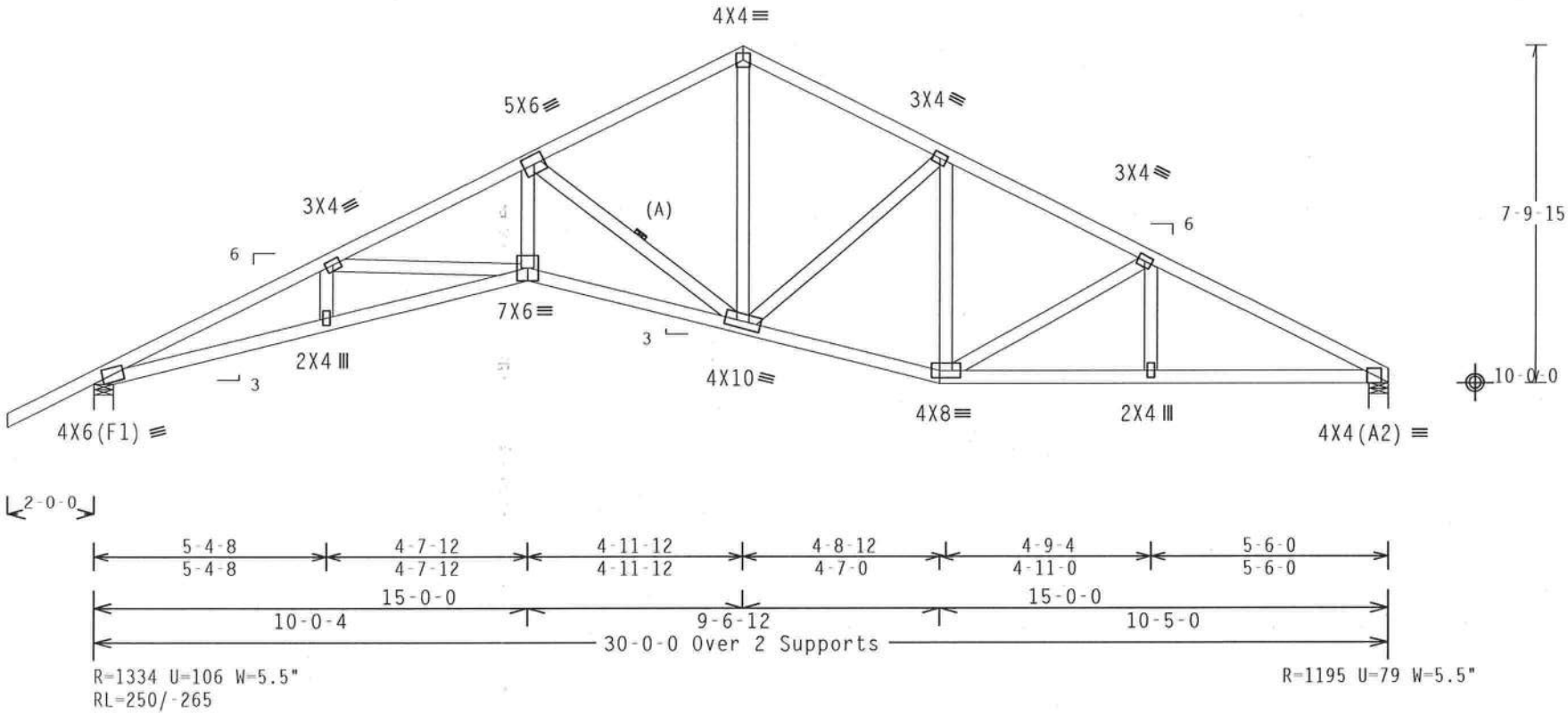

Design Crit: FBC2007Res/TPI-2002(STD)

PLT TYP. Wave | FT/RT=20%(0%)/10(0) | 9.02.03.061 | QTY:3 | FL/-/5/-/-/R/- | Scale =.25"/Ft.

ALPINE
ITW Building Components Group Inc.
Haines City, FL 33844
FL COA #0 278

WARNING TRUSSES REQUIRE EXTREME CARE IN FABRICATION, HANDLING, SHIPPING, INSTALLING AND BRACING. REFER TO BCSI (BUILDING COMPONENT SAFETY INFORMATION), PUBLISHED BY TPI (TRUSS PLATE INSTITUTE, 218 NORTH LEE STREET, SUITE 312, ALEXANDRIA, VA, 22314) AND WTCA (WOOD TRUSS COUNCIL OF AMERICA, 6300 ENTERPRISE LANE, MADISON, WI 53719) FOR SAFETY PRACTICES PRIOR TO PERFORMING THESE FUNCTIONS. UNLESS OTHERWISE INDICATED TOP CHORD SHALL HAVE PROPERLY ATTACHED STRUCTURAL PANELS AND BOTTOM CHORD SHALL HAVE A PROPERLY ATTACHED RIGID CEILING.

IMPORTANT FURNISH A COPY OF THIS DESIGN TO THE INSTALLATION CONTRACTOR. ITW BCG, INC. SHALL NOT BE RESPONSIBLE FOR ANY DEVIATION FROM THIS DESIGN; ANY FAILURE TO BUILD THE TRUSS IN CONFORMANCE WITH TPI; OR FABRICATING, HANDLING, SHIPPING, INSTALLING & BRACING OF TRUSSES. DESIGN CONFORMS WITH APPLICABLE PROVISIONS OF NDS (NATIONAL DESIGN SPEC, BY AF&PA) AND TPI. ITW BCG CONNECTOR PLATES ARE MADE OF 20/18/16GA (W,H/SS/K) ASTM A653 GRADE 40/60 (W, K/H,SS) GALV. STEEL. APPLY PLATES TO EACH FACE OF TRUSS AND, UNLESS OTHERWISE LOCATED ON THIS DESIGN, POSITION PER DRAWINGS 160A-Z. ANY INSPECTION OF PLATES FOLLOWED BY (1) SHALL BE PER ANNEX A3 OF TPI1-2002 SEC.3. A SEAL ON THIS DRAWING INDICATES ACCEPTANCE OF PROFESSIONAL ENGINEERING RESPONSIBILITY SOLELY FOR THE TRUSS COMPONENT DESIGN SHOWN. THE SUITABILITY AND USE OF THIS COMPONENT FOR ANY BUILDING IS THE RESPONSIBILITY OF THE BUILDING DESIGNER PER ANSI/TPI 1 SEC. 2.

WILLIAM H. KRICK LICENSE No. 70861 STATE OF FLORIDA PROFESSIONAL ENGINEER
May 17, 10

TC LL	20.0 PSF	REF	R215-- 67376
TC DL	10.0 PSF	DATE	05/17/10
BC DL	10.0 PSF	DRW	HCUSR215 10137006
BC LL	0.0 PSF	HC-ENG	KD/WHK *
TOT.LD.	40.0 PSF	SEQN-	263831
DUR.FAC.	1.25	FROM	CGN
SPACING	24.0"	JREF-	1U1V215_Z01

(6623B-/SGANGA RESIDENCE /Plumb Level Construction -- , ** - A7)

Top chord 2x4 SP #2 N
Bot chord 2x4 SP #2 N
Webs 2x4 SP #2 N

Roof overhang supports 2.00 psf soffit load.

Bottom chord checked for 10.00 psf non-concurrent live load.

The overall height of this truss excluding overhang is 7-9-15.

110 mph wind, 15.00 ft mean hgt, ASCE 7-05, CLOSED bldg, not located within 4.50 ft from roof edge, CAT II, EXP C, wind TC DL=5.0 psf, wind BC DL=5.0 psf. Iw=1.00 GCpi(+/-)=0.18

Wind reactions based on MWFRS pressures.

Deflection meets L/240 live and L/180 total load.

MWFRS loads based on trusses located at least 15.00 ft. from roof edge.

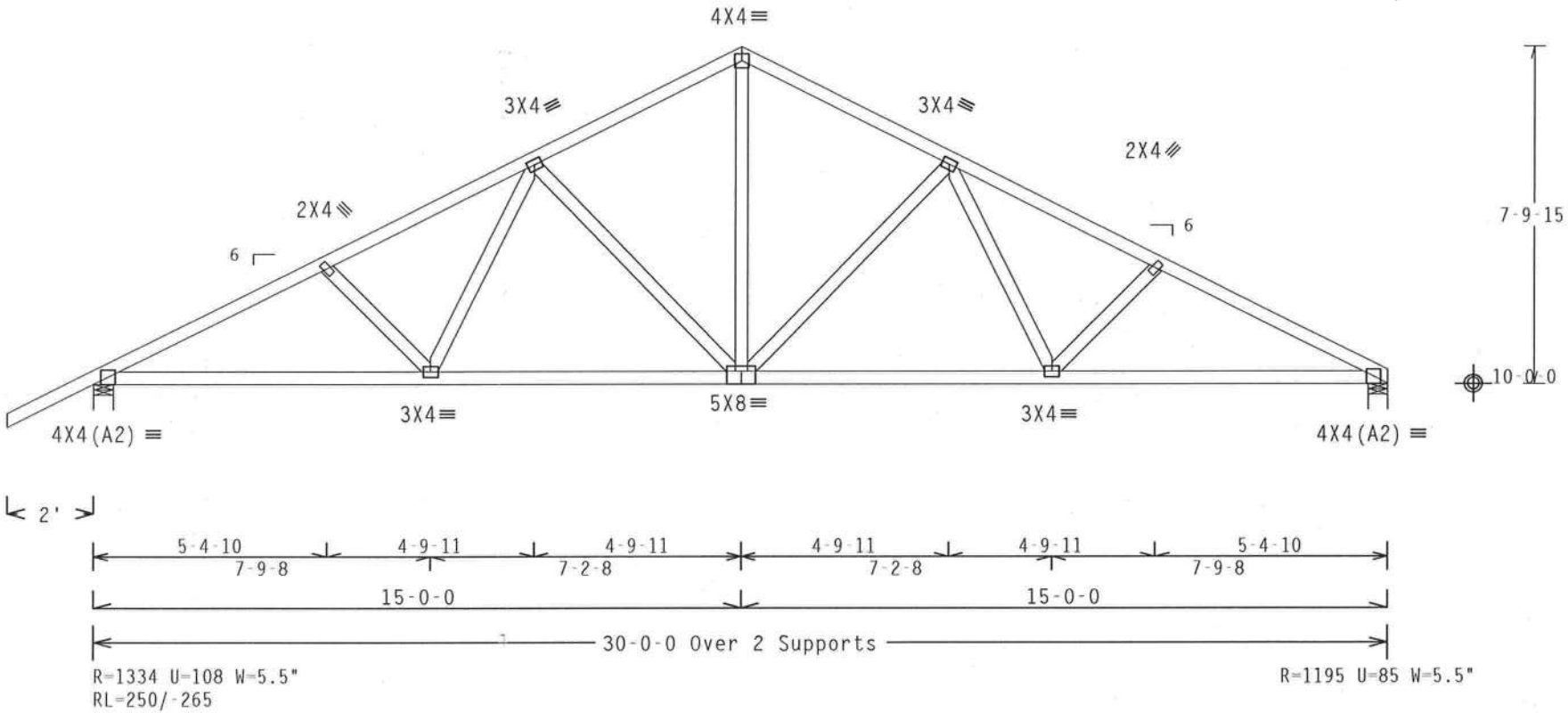

Design Crit: FBC2007Res/TPI-2002(STD)

PLT TYP. Wave | FT/RT=20%(0%)/10(0) | 9.02.03.0610 | QTY:6 | FL/-/5/-/-/R/- | Scale =.25"/Ft.

ALPINE
ITW Building Components Group Inc.
Haines City, FL 33844
FL COA #0 278

WARNING TRUSSES REQUIRE EXTREME CARE IN FABRICATION, HANDLING, SHIPPING, INSTALLING AND BRACING. REFER TO BCSI (BUILDING COMPONENT SAFETY INFORMATION), PUBLISHED BY TPI (TRUSS PLATE INSTITUTE, 218 NORTH LEE STREET, SUITE 312, ALEXANDRIA, VA, 22314) AND WTCA (WOOD TRUSS COUNCIL OF AMERICA, 6300 ENTERPRISE LANE, MADISON, WI 53719) FOR SAFETY PRACTICES PRIOR TO PERFORMING THESE FUNCTIONS. UNLESS OTHERWISE INDICATED TOP CHORD SHALL HAVE PROPERLY ATTACHED STRUCTURAL PANELS AND BOTTOM CHORD SHALL HAVE A PROPERLY ATTACHED RIGID CEILING.

IMPORTANTFURNISH A COPY OF THIS DESIGN TO THE INSTALLATION CONTRACTOR. ITW BCG, INC. SHALL NOT BE RESPONSIBLE FOR ANY DEVIATION FROM THIS DESIGN; ANY FAILURE TO BUILD THE TRUSS IN CONFORMANCE WITH TPI; OR FABRICATING, HANDLING, SHIPPING, INSTALLING & BRACING OF TRUSSES. DESIGN CONFORMS WITH APPLICABLE PROVISIONS OF NDS (NATIONAL DESIGN SPEC, BY AF&PA) AND TPI. ITW BCG CONNECTOR PLATES ARE MADE OF 20/18/16GA (W,H/SS/K) ASTM A653 GRADE 40/60 (W, K/H,SS) GALV. STEEL. APPLY PLATES TO EACH FACE OF TRUSS AND, UNLESS OTHERWISE LOCATED ON THIS DESIGN, POSITION PER DRAWINGS 160A-Z. ANY INSPECTION OF PLATES FOLLOWED BY (i) SHALL BE PER ANNEX A3 OF TPI1-2002 SEC.3. A SEAL ON THIS DRAWING INDICATES ACCEPTANCE OF PROFESSIONAL ENGINEERING RESPONSIBILITY SOLELY FOR THE TRUSS COMPONENT DESIGN SHOWN. THE SUITABILITY AND USE OF THIS COMPONENT FOR ANY BUILDING IS THE RESPONSIBILITY OF THE BUILDING DESIGNER PER ANSI/TPI 1 SEC. 2.

WILLIAM H. KRICK LICENSE No. 30881 STATE OF FLORIDA PROFESSIONAL ENGINEER
May 17, 10

TC LL	20.0 PSF	REF	R215-- 67377
TC DL	10.0 PSF	DATE	05/17/10
BC DL	10.0 PSF	DRW	HCUSR215 10137007
BC LL	0.0 PSF	HC-ENG	KD/WHK *
TOT.LD.	40.0 PSF	SEQN-	263829
DUR.FAC.	1.25	FROM	CGN
SPACING	24.0"	JREF-	1U1V215_Z01

(6623B-/SGANGA RESIDENCE /Plumb Level Construction -- , ** - A8)

Top chord 2x4 SP #2 N
Bot chord 2x4 SP #2 N
Webs 2x4 SP #2 N

Roof overhang supports 2.00 psf soffit load.

Bottom chord checked for 10.00 psf non-concurrent live load.

The overall height of this truss excluding overhang is 7-9-15.

110 mph wind, 15.00 ft mean hgt, ASCE 7-05, CLOSED bldg, Located anywhere in roof, CAT II, EXP C, wind TC DL=5.0 psf, wind BC DL=5.0 psf. Iw=1.00 GCpi(+/-)=0.18

Wind reactions based on MWFRS pressures.

Deflection meets L/240 live and L/180 total load.

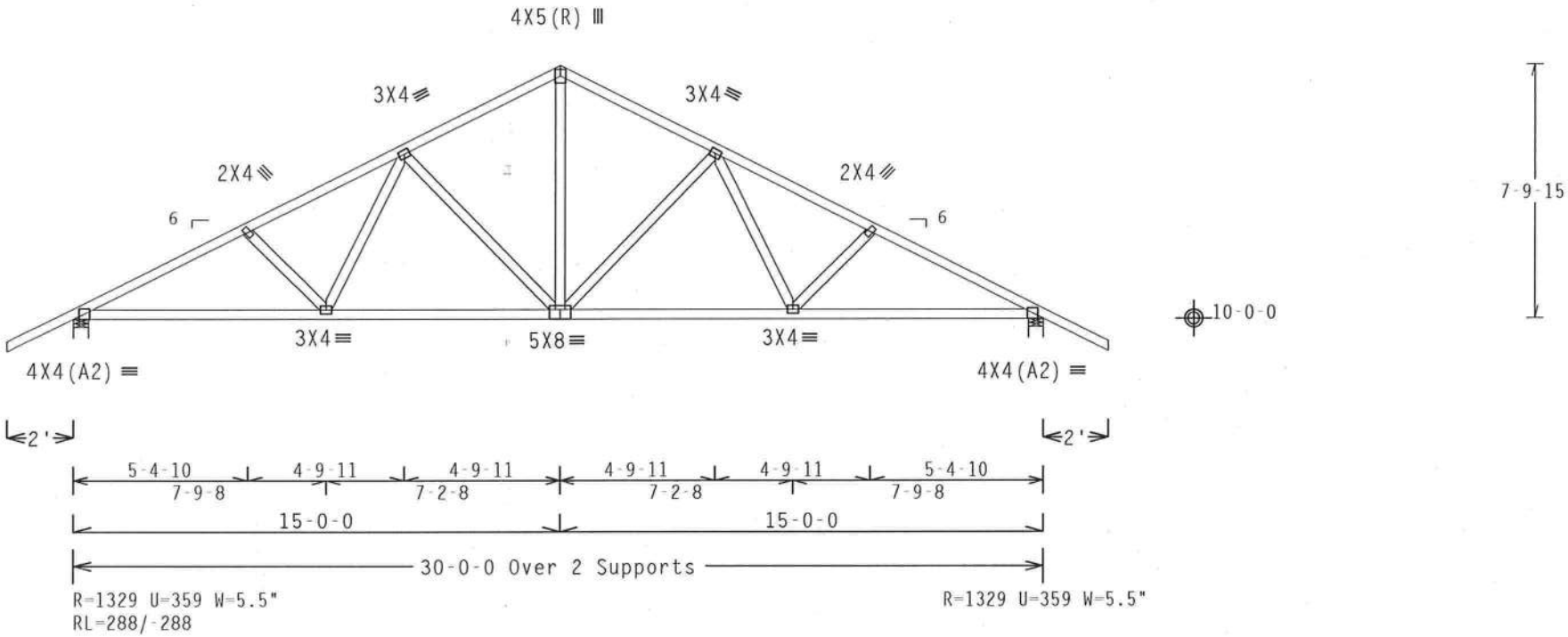

Design Crit: FBC2007Res/TPI-2002(STD)

PLT TYP. Wave | FT/RT=20%(0%)/10(0) | 9.02.03.0610-17 | QTY:6 | FL/-/5/-/-/R/- | Scale =.1875"/Ft.

ALPINE
ITW Building Components Group Inc.
Haines City, FL 33844
FL COA #0 278

WARNING TRUSSES REQUIRE EXTREME CARE IN FABRICATION, HANDLING, SHIPPING, INSTALLING AND BRACING. REFER TO BCSI (BUILDING COMPONENT SAFETY INFORMATION), PUBLISHED BY TPI (TRUSS PLATE INSTITUTE, 218 NORTH LEE STREET, SUITE 312, ALEXANDRIA, VA, 22314) AND WTCA (WOOD TRUSS COUNCIL OF AMERICA, 6300 ENTERPRISE LANE, MADISON, WI 53719) FOR SAFETY PRACTICES PRIOR TO PERFORMING THESE FUNCTIONS. UNLESS OTHERWISE INDICATED TOP CHORD SHALL HAVE PROPERLY ATTACHED STRUCTURAL PANELS AND BOTTOM CHORD SHALL HAVE A PROPERLY ATTACHED RIGID CEILING.

IMPORTANTFURNISH A COPY OF THIS DESIGN TO THE INSTALLATION CONTRACTOR. ITW BCG, INC. SHALL NOT BE RESPONSIBLE FOR ANY DEVIATION FROM THIS DESIGN; ANY FAILURE TO BUILD THE TRUSS IN CONFORMANCE WITH TPI; OR FABRICATING, HANDLING, SHIPPING, INSTALLING & BRACING OF TRUSSES.
DESIGN CONFORMS WITH APPLICABLE PROVISIONS OF NDS (NATIONAL DESIGN SPEC. BY AF&PA) AND TPI. ITW BCG CONNECTOR PLATES ARE MADE OF 20/18/16GA (W,H/SS/K) ASTM A653 GRADE 40/60 (W, K/H,SS) GALV. STEEL. APPLY PLATES TO EACH FACE OF TRUSS AND, UNLESS OTHERWISE LOCATED ON THIS DESIGN, POSITION PER DRAWINGS 160A-Z. ANY INSPECTION OF PLATES FOLLOWED BY (1) SHALL BE PER ANNEX A3 OF TPI1-2002 SEC.3. A SEAL ON THIS DRAWING INDICATES ACCEPTANCE OF PROFESSIONAL ENGINEERING RESPONSIBILITY SOLELY FOR THE TRUSS COMPONENT DESIGN SHOWN. THE SUITABILITY AND USE OF THIS COMPONENT FOR ANY BUILDING IS THE RESPONSIBILITY OF THE BUILDING DESIGNER PER ANSI/TPI 1 SEC. 2.

WILLIAM H. KRICK LICENSE No.70366 STATE OF FLORIDA PROFESSIONAL ENGINEER
May 17, 10

TC LL	20.0 PSF	REF	R215-- 67378
TC DL	10.0 PSF	DATE	05/17/10
BC DL	10.0 PSF	DRW	HCUSR215 10137008
BC LL	0.0 PSF	HC-ENG	KD/WHK *
TOT.LD.	40.0 PSF	SEQN-	263827
DUR.FAC.	1.25	FROM	CGN
SPACING	24.0"	JREF-	1U1V215_Z01

(6623B-/SGANGA RESIDENCE /Plumb Level Construction -- , ** - A9)

Top chord 2x4 SP #2 N
Bot chord 2x4 SP #2 N
Webs 2x4 SP #2 N

Truss spaced at 24.0" OC designed to support 2-0-0 top chord outlookers. Cladding load shall not exceed 0.00 PSF. Top chord must not be cut or notched.

Bottom chord checked for 10.00 psf non-concurrent live load.

The overall height of this truss excluding overhang is 7-6-0.

THE BUILDING DESIGNER IS RESPONSIBLE FOR THE DESIGN OF THE ROOF AND CEILING DIAPHRAGMS, GABLE END SHEAR WALLS, AND SUPPORTING SHEAR WALLS. SHEAR WALLS MUST PROVIDE CONTINUOUS LATERAL RESTRAINT TO THE GABLE END. ALL CONNECTIONS TO BE DESIGNED BY THE BUILDING DESIGNER.

110 mph wind, 15.00 ft mean hgt, ASCE 7-05, CLOSED bldg, Located anywhere in roof, CAT II, EXP C, wind TC DL=5.0 psf, wind BC DL=5.0 psf. Iw=1.00 GCpi(+/-)=0.18

Wind reactions based on MWFRS pressures.

See DWGS A11015050109 & GBLLETIN0109 for more requirements.

Deflection meets L/240 live and L/180 total load.

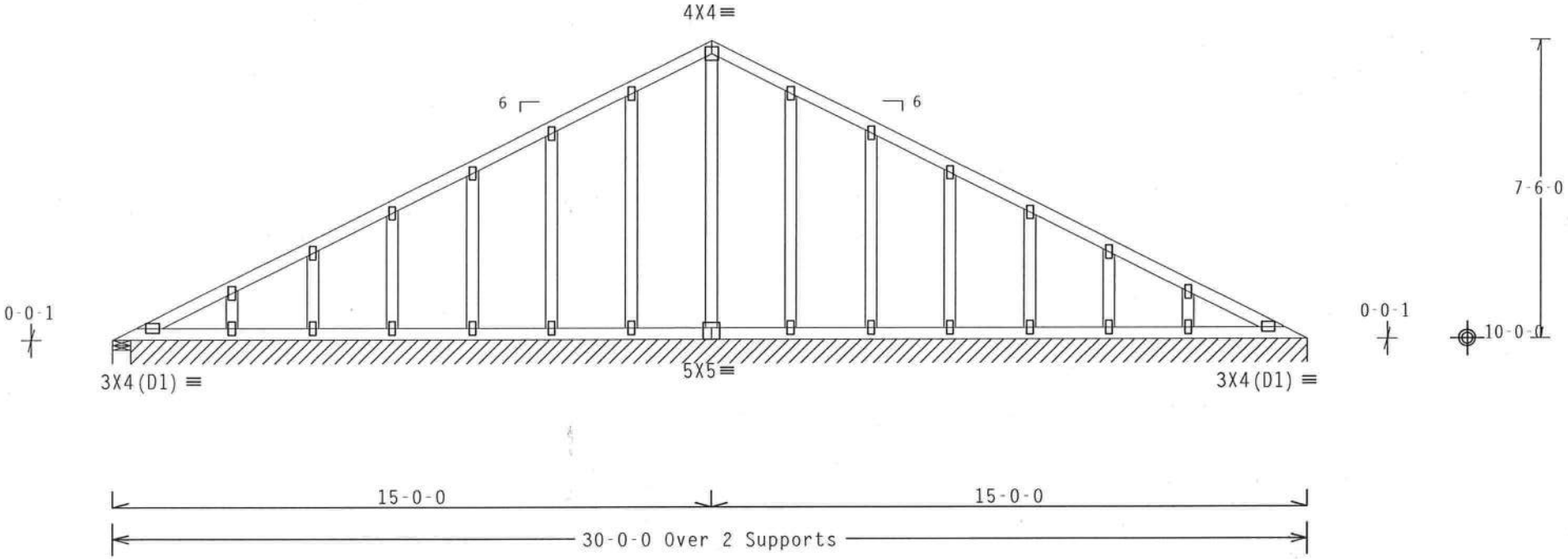

Note: All Plates Are 2X4 Except As Shown.

Design Crit: FBC2007Res/TPI-2002(STD)

PLT TYP. Wave | FT/RT=20%(0%)/10(0) | 9.02.03.061 | QTY:1 | FL/-/5/-/-/R/- | Scale =.25"/Ft.

ALPINE
ITW Building Components Group Inc.
Haines City, FL 33844
FL COA #0 278

WARNING TRUSSES REQUIRE EXTREME CARE IN FABRICATION, HANDLING, SHIPPING, INSTALLING AND BRACING. REFER TO BCSI (BUILDING COMPONENT SAFETY INFORMATION), PUBLISHED BY TPI (TRUSS PLATE INSTITUTE, 218 NORTH LEE STREET, SUITE 312, ALEXANDRIA, VA, 22314) AND WTCA (WOOD TRUSS COUNCIL OF AMERICA, 6300 ENTERPRISE LANE, MADISON, WI 53719) FOR SAFETY PRACTICES PRIOR TO PERFORMING THESE FUNCTIONS. UNLESS OTHERWISE INDICATED TOP CHORD SHALL HAVE PROPERLY ATTACHED STRUCTURAL PANELS AND BOTTOM CHORD SHALL HAVE A PROPERLY ATTACHED RIGID CEILING.

IMPORTANT FURNISH A COPY OF THIS DESIGN TO THE INSTALLATION CONTRACTOR. ITW BCG, INC. SHALL NOT BE RESPONSIBLE FOR ANY DEVIATION FROM THIS DESIGN; ANY FAILURE TO BUILD THE TRUSS IN CONFORMANCE WITH TPI; OR FABRICATING, HANDLING, SHIPPING, INSTALLING & BRACING OF TRUSSES.
DESIGN CONFORMS WITH APPLICABLE PROVISIONS OF NDS (NATIONAL DESIGN SPEC. BY AF&PA) AND TPI. ITW BCG CONNECTOR PLATES ARE MADE OF 20/18/16GA (W,H/SS/K) ASTM A653 GRADE 40/60 (W, K/H,SS) GALV. STEEL. APPLY PLATES TO EACH FACE OF TRUSS AND, UNLESS OTHERWISE LOCATED ON THIS DESIGN, POSITION PER DRAWINGS 160A-Z. ANY INSPECTION OF PLATES FOLLOWED BY (1) SHALL BE PER ANNEX A3 OF TPI1-2002 SEC.3. A SEAL ON THIS DRAWING INDICATES ACCEPTANCE OF PROFESSIONAL ENGINEERING RESPONSIBILITY SOLELY FOR THE TRUSS COMPONENT DESIGN SHOWN. THE SUITABILITY AND USE OF THIS COMPONENT FOR ANY BUILDING IS THE RESPONSIBILITY OF THE BUILDING DESIGNER PER ANSI/TPI 1 SEC. 2.

WILLIAM H. KRICK LICENSE No. 70861 STATE OF FLORIDA PROFESSIONAL ENGINEER
May 17, 10

TC LL	20.0 PSF	REF	R215-- 67379
TC DL	10.0 PSF	DATE	05/17/10
BC DL	10.0 PSF	DRW	HCUSR215 10137009
BC LL	0.0 PSF	HC-ENG	KD/WHK
TOT.LD.	40.0 PSF	SEQN-	263825
DUR.FAC.	1.25	FROM	CGN
SPACING	24.0"	JREF-	1U1V215_Z01

Top chord 2x4 SP #2 N
Bot chord 2x4 SP #2 N
Webs 2x4 SP #2 N

Roof overhang supports 2.00 psf soffit load.

Truss passed check for 20 psf additional bottom chord live load in areas with 42"-high x 24"-wide clearance.

The overall height of this truss excluding overhang is 6-3-15.

110 mph wind, 15.00 ft mean hgt, ASCE 7-05, CLOSED bldg, Located anywhere in roof, CAT II, EXP C, wind TC DL=5.0 psf, wind BC DL=5.0 psf. Iw=1.00 GCpi(+/-)=0.18

Wind reactions based on MWFRS pressures.

Bottom chord checked for 10.00 psf non-concurrent live load.

Deflection meets L/240 live and L/180 total load.

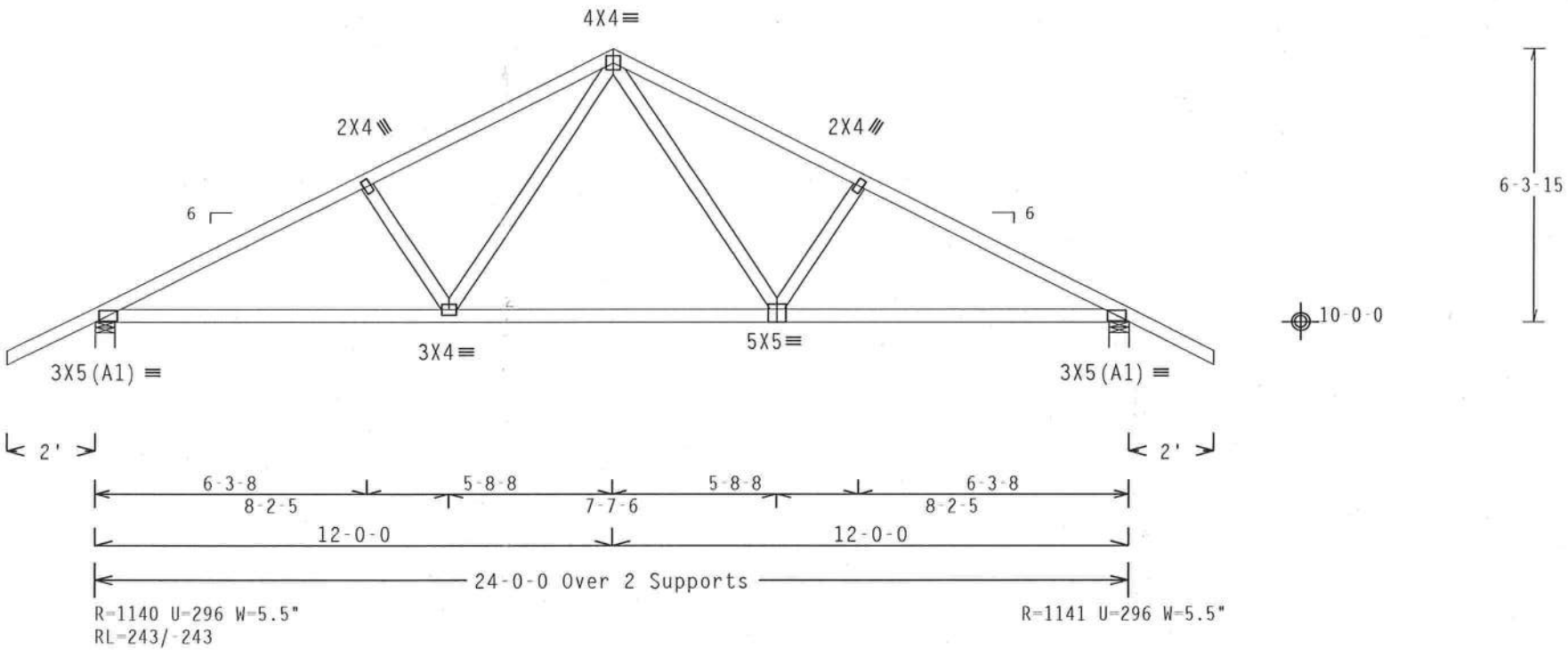

Design Crit: FBC2007Res/TPI-2002(STD)

PLT TYP. Wave FT/RT=20%(0%)/10(0) 9.02.03.06 QTY:11 FL/-/5/-/-/R/- Scale =.25"/Ft.

ALPINE
ITW Building Components Group Inc.
Haines City, FL 33844
FL COA #0 278

WARNING TRUSSES REQUIRE EXTREME CARE IN FABRICATION, HANDLING, SHIPPING, INSTALLING AND BRACING. REFER TO BCSI (BUILDING COMPONENT SAFETY INFORMATION), PUBLISHED BY TPI (TRUSS PLATE INSTITUTE, 218 NORTH LEE STREET, SUITE 312, ALEXANDRIA, VA, 22314) AND WTCA (WOOD TRUSS COUNCIL OF AMERICA, 6300 ENTERPRISE LANE, MADISON, WI 53719) FOR SAFETY PRACTICES PRIOR TO PERFORMING THESE FUNCTIONS. UNLESS OTHERWISE INDICATED TOP CHORD SHALL HAVE PROPERLY ATTACHED STRUCTURAL PANELS AND BOTTOM CHORD SHALL HAVE A PROPERLY ATTACHED RIGID CEILING.

IMPORTANT FURNISH A COPY OF THIS DESIGN TO THE INSTALLATION CONTRACTOR. ITW BCG, INC. SHALL NOT BE RESPONSIBLE FOR ANY DEVIATION FROM THIS DESIGN; ANY FAILURE TO BUILD THE TRUSS IN CONFORMANCE WITH TPI; OR FABRICATING, HANDLING, SHIPPING, INSTALLING & BRACING OF TRUSSES.
DESIGN CONFORMS WITH APPLICABLE PROVISIONS OF NDS (NATIONAL DESIGN SPEC, BY AF&PA) AND TPI. ITW BCG CONNECTOR PLATES ARE MADE OF 20/18/16GA (W,H/SS/K) ASTM A653 GRADE 40/60 (H, K/H,SS) GALV. STEEL. APPLY PLATES TO EACH FACE OF TRUSS AND, UNLESS OTHERWISE LOCATED ON THIS DESIGN, POSITION PER DRAWINGS 160A-Z. ANY INSPECTION OF PLATES FOLLOWED BY (1) SHALL BE PER ANNEX A3 OF TPI1-2002 SEC.3. A SEAL ON THIS DRAWING INDICATES ACCEPTANCE OF PROFESSIONAL ENGINEERING RESPONSIBILITY SOLELY FOR THE TRUSS COMPONENT DESIGN SHOWN. THE SUITABILITY AND USE OF THIS COMPONENT FOR ANY BUILDING IS THE RESPONSIBILITY OF THE BUILDING DESIGNER PER ANSI/TPI 1 SEC. 2.

WILLIAM H. KRICK LICENSE No 70361 STATE OF FLORIDA PROFESSIONAL ENGINEER
May 17 '10

TC LL	20.0 PSF	REF	R215-- 67380
TC DL	10.0 PSF	DATE	05/17/10
BC DL	10.0 PSF	DRW	HCUSR215 10137010
BC LL	0.0 PSF	HC-ENG	KD/WHK *
TOT.LD.	40.0 PSF	SEQN-	263835
DUR.FAC.	1.25	FROM	CGN
SPACING	24.0"	JREF-	1U1V215_Z01

(6623B-/SGANGA RESIDENCE /Plumb Level Construction -- , ** - A11)

Top chord 2x4 SP #2 N
Bot chord 2x4 SP #2 N
Webs 2x4 SP #2 N

Bottom chord checked for 10.00 psf non-concurrent live load.

Deflection meets L/240 live and L/180 total load.

MWFRS loads based on trusses located at least 15.00 ft. from roof edge.

110 mph wind, 15.00 ft mean hgt, ASCE 7-05, CLOSED bldg, not located within 4.50 ft from roof edge, CAT II, EXP C, wind TC DL=5.0 psf, wind BC DL=5.0 psf. Iw=1.00 GCpi(+/-)=0.18

Wind reactions based on MWFRS pressures.

The overall height of this truss excluding overhang is 6-3-15.

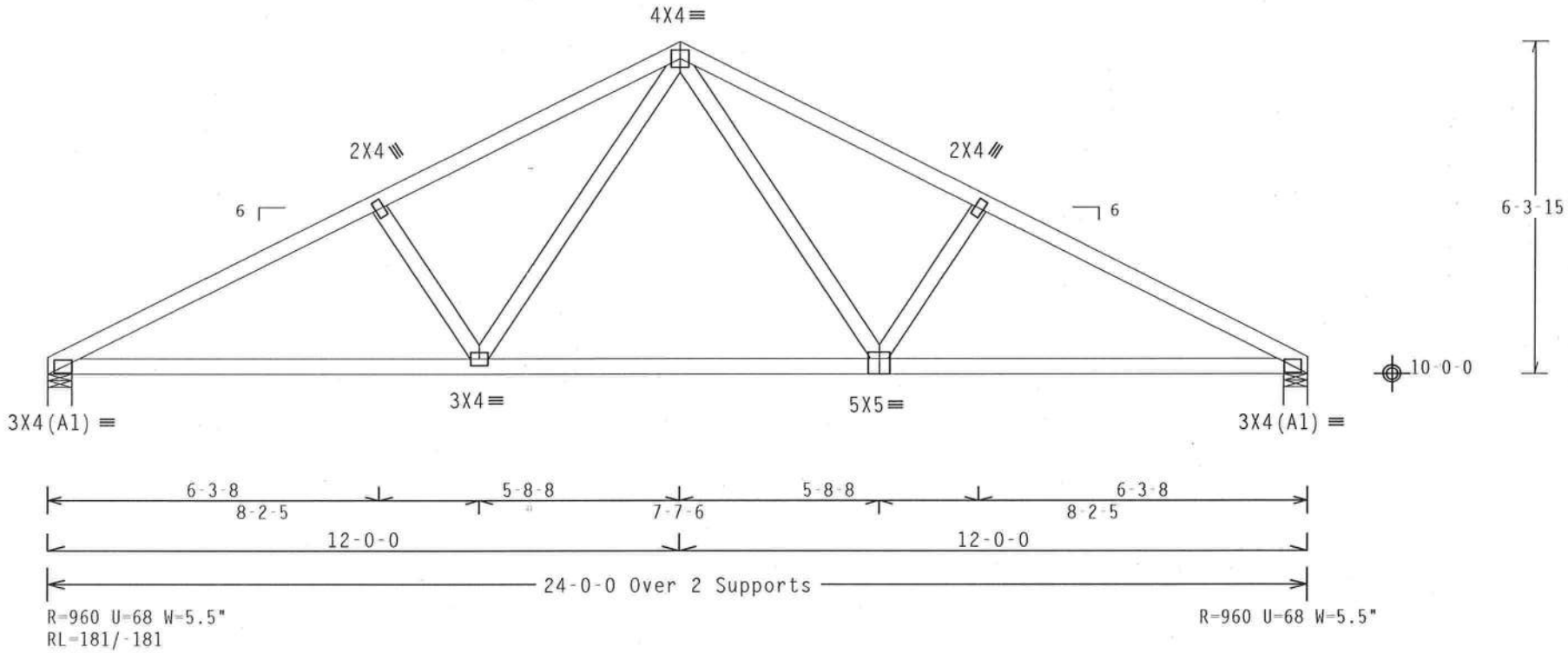

Design Crit: FBC2007Res/TPI-2002(STD)

PLT TYP. Wave | FT/RT=20%(0%)/10(0) | 9.02.03 | QTY:1 | FL/-/5/-/-/R/- | Scale =.3125"/Ft.

ALPINE
ITW Building Components Group Inc.
Haines City, FL 33844
FL COA #0 278

WARNING TRUSSES REQUIRE EXTREME CARE IN FABRICATION, HANDLING, SHIPPING, INSTALLING AND BRACING. REFER TO BCSI (BUILDING COMPONENT SAFETY INFORMATION), PUBLISHED BY TPI (TRUSS PLATE INSTITUTE, 218 NORTH LEE STREET, SUITE 312, ALEXANDRIA, VA, 22314) AND WTCA (WOOD TRUSS COUNCIL OF AMERICA, 6300 ENTERPRISE LANE, MADISON, WI 53719) FOR SAFETY PRACTICES PRIOR TO PERFORMING THESE FUNCTIONS. UNLESS OTHERWISE INDICATED TOP CHORD SHALL HAVE PROPERLY ATTACHED STRUCTURAL PANELS AND BOTTOM CHORD SHALL HAVE A PROPERLY ATTACHED RIGID CEILING.

IMPORTANT FURNISH A COPY OF THIS DESIGN TO THE INSTALLATION CONTRACTOR. ITW BCG, INC. SHALL NOT BE RESPONSIBLE FOR ANY DEVIATION FROM THIS DESIGN; ANY FAILURE TO BUILD THE TRUSS IN CONFORMANCE WITH TPI; OR FABRICATING, HANDLING, SHIPPING, INSTALLING & BRACING OF TRUSSES.
DESIGN CONFORMS WITH APPLICABLE PROVISIONS OF NDS (NATIONAL DESIGN SPEC, BY AF&PA) AND TPI. ITW BCG CONNECTOR PLATES ARE MADE OF 20/18/16GA (W,H/SS/K) ASTM A653 GRADE 40/60 (W, K/H,SS) GALV. STEEL. APPLY PLATES TO EACH FACE OF TRUSS AND, UNLESS OTHERWISE LOCATED ON THIS DESIGN, POSITION PER DRAWINGS 160A-Z. ANY INSPECTION OF PLATES FOLLOWED BY (1) SHALL BE PER ANNEX A3 OF TPI1-2002 SEC.3. A SEAL ON THIS DRAWING INDICATES ACCEPTANCE OF PROFESSIONAL ENGINEERING RESPONSIBILITY SOLELY FOR THE TRUSS COMPONENT DESIGN SHOWN. THE SUITABILITY AND USE OF THIS COMPONENT FOR ANY BUILDING IS THE RESPONSIBILITY OF THE BUILDING DESIGNER PER ANSI/TPI 1 SEC. 2.

WILLIAM H. KRICK LICENSE No. 70861 STATE OF FLORIDA PROFESSIONAL ENGINEER
May 17 '10

TC LL	20.0 PSF	REF	R215-- 67381
TC DL	10.0 PSF	DATE	05/17/10
BC DL	10.0 PSF	DRW	HCUSR215 10137011
BC LL	0.0 PSF	HC-ENG	KD/WHK *
TOT.LD.	40.0 PSF	SEQN-	263837
DUR.FAC.	1.25	FROM	CGN
SPACING	24.0"	JREF-	1U1V215_Z01

(6623B-/SGANGA RESIDENCE /Plumb Level Construction -- , ** - A12)

Top chord 2x4 SP #2 N
Bot chord 2x4 SP #2 N
Webs 2x4 SP #2 N

Truss spaced at 24.0" OC designed to support 2-0-0 top chord outlookers. Cladding load shall not exceed 0.00 PSF. Top chord must not be cut or notched.

Bottom chord checked for 10.00 psf non-concurrent live load.

The overall height of this truss excluding overhang is 6-0-0.

THE BUILDING DESIGNER IS RESPONSIBLE FOR THE DESIGN OF THE ROOF AND CEILING DIAPHRAGMS, GABLE END SHEAR WALLS, AND SUPPORTING SHEAR WALLS. SHEAR WALLS MUST PROVIDE CONTINUOUS LATERAL RESTRAINT TO THE GABLE END. ALL CONNECTIONS TO BE DESIGNED BY THE BUILDING DESIGNER.

110 mph wind, 15.00 ft mean hgt, ASCE 7-05, CLOSED bldg, Located anywhere in roof, CAT II, EXP C, wind TC DL=5.0 psf, wind BC DL=5.0 psf. Iw=1.00 GCpi(+/-)=0.18

Wind reactions based on MWFRS pressures.

See DWGS A11015050109 & GBLLETIN0109 for more requirements.

Deflection meets L/240 live and L/180 total load.

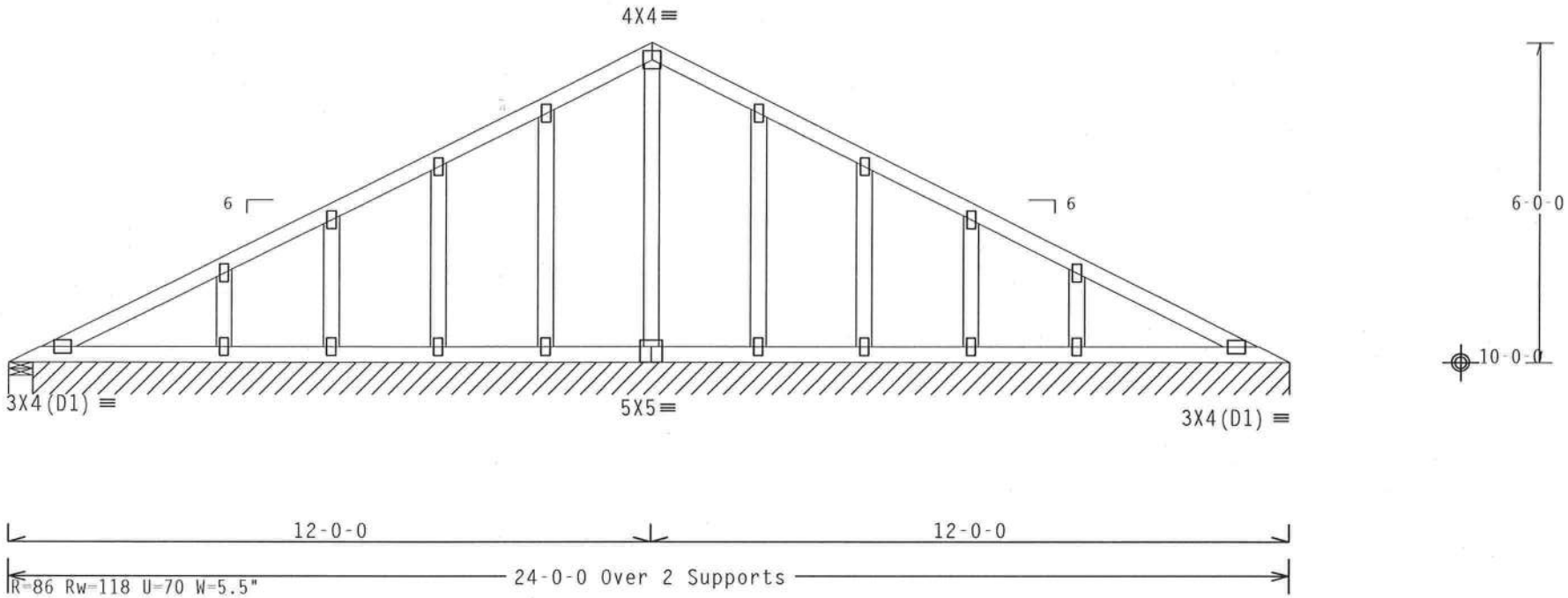

Note: All Plates Are 2X4 Except As Shown.

Design Crit: FBC2007Res/TPI-2002(STD)

PLT TYP. Wave FT/RT=20%(0%)/10(0) 9.02.03.0610.07 QTY:1 FL/-/5/-/-/R/- Scale =.3125"/Ft.

ALPINE
ITW Building Components Group Inc.
Haines City, FL 33844
FL COA #0 278

WARNING TRUSSES REQUIRE EXTREME CARE IN FABRICATION, HANDLING, SHIPPING, INSTALLING AND BRACING. REFER TO BCSI (BUILDING COMPONENT SAFETY INFORMATION), PUBLISHED BY TPI (TRUSS PLATE INSTITUTE, 218 NORTH LEE STREET, SUITE 312, ALEXANDRIA, VA, 22314) AND WTCA (WOOD TRUSS COUNCIL OF AMERICA, 6300 ENTERPRISE LANE, MADISON, WI 53719) FOR SAFETY PRACTICES PRIOR TO PERFORMING THESE FUNCTIONS. UNLESS OTHERWISE INDICATED TOP CHORD SHALL HAVE PROPERLY ATTACHED STRUCTURAL PANELS AND BOTTOM CHORD SHALL HAVE A PROPERLY ATTACHED RIGID CEILING.

IMPORTANT FURNISH A COPY OF THIS DESIGN TO THE INSTALLATION CONTRACTOR. ITW BCG, INC. SHALL NOT BE RESPONSIBLE FOR ANY DEVIATION FROM THIS DESIGN; ANY FAILURE TO BUILD THE TRUSS IN CONFORMANCE WITH TPI; OR FABRICATING, HANDLING, SHIPPING, INSTALLING & BRACING OF TRUSSES.
DESIGN CONFORMS WITH APPLICABLE PROVISIONS OF NDS (NATIONAL DESIGN SPEC, BY AF&PA) AND TPI. ITW BCG CONNECTOR PLATES ARE MADE OF 20/18/16GA (W,H/SS/K) ASTM A653 GRADE 40/60 (W, K/H,SS) GALV. STEEL. APPLY PLATES TO EACH FACE OF TRUSS AND, UNLESS OTHERWISE LOCATED ON THIS DESIGN, POSITION PER DRAWINGS 160A-Z. ANY INSPECTION OF PLATES FOLLOWED BY (1) SHALL BE PER ANNEX A3 OF TPI1-2002 SEC.3. A SEAL ON THIS DRAWING INDICATES ACCEPTANCE OF PROFESSIONAL ENGINEERING RESPONSIBILITY SOLELY FOR THE TRUSS COMPONENT DESIGN SHOWN. THE SUITABILITY AND USE OF THIS COMPONENT FOR ANY BUILDING IS THE RESPONSIBILITY OF THE BUILDING DESIGNER PER ANSI/TPI 1 SEC. 2.

WILLIAM H. KRICK LICENSE No 70861 STATE OF FLORIDA PROFESSIONAL ENGINEER
May 17, 10

TC LL	20.0 PSF	REF R215-- 67382
TC DL	10.0 PSF	DATE 05/17/10
BC DL	10.0 PSF	DRW HCUSR215 10137012
BC LL	0.0 PSF	HC-ENG KD/WHK
TOT.LD.	40.0 PSF	SEQN- 263839
DUR.FAC.	1.25	FROM CGN
SPACING	24.0"	JREF- 1U1V215_Z01

CLB WEB BRACE SUBSTITUTION

THIS DETAIL IS TO BE USED WHEN CONTINUOUS LATERAL BRACING (CLB) IS SPECIFIED ON A TRUSS DESIGN BUT AN ALTERNATIVE WEB BRACING METHOD IS DESIRED.

NOTES:

THIS DETAIL IS ONLY APPLICABLE FOR CHANGING THE SPECIFIED CLB SHOWN ON SINGLE PLY SEALED DESIGNS TO T-BRACING OR SCAB BRACING.

ALTERNATIVE BRACING SPECIFIED IN CHART BELOW MAY BE CONSERVATIVE. FOR MINIMUM ALTERNATIVE BRACING, RE-RUN DESIGN WITH APPROPRIATE BRACING.

WEB MEMBER SIZE	SPECIFIED CLB BRACING	ALTERNATIVE BRACING T OR L-BRACE	ALTERNATIVE BRACING SCAB BRACE
2X3 OR 2X4	1 ROW	2X4	1-2X4
2X3 OR 2X4	2 ROWS	2X6	2-2X4
2X6	1 ROW	2X4	1-2X6
2X6	2 ROWS	2X6	2-2X4(*)
2X8	1 ROW	2X6	1-2X8
2X8	2 ROWS	2X6	2-2X6(*)

T-BRACE, L-BRACE AND SCAB BRACE TO BE SAME SPECIES AND GRADE OR BETTER THAN WEB MEMBER UNLESS SPECIFIED OTHERWISE ON ENGINEER'S SEALED DESIGN.

(*) CENTER SCAB ON WIDE FACE OF WEB. APPLY (1) SCAB TO EACH FACE OF WEB.

T-BRACING OR L-BRACING:

APPLY TO EITHER SIDE OF WEB NARROW FACE.
ATTACH WITH 10d BOX OR GUN
(0.128"x 3.",MIN) NAILS.
AT 6" O.C.
BRACE IS A
MINIMUM 80% OF WEB
MEMBER LENGTH

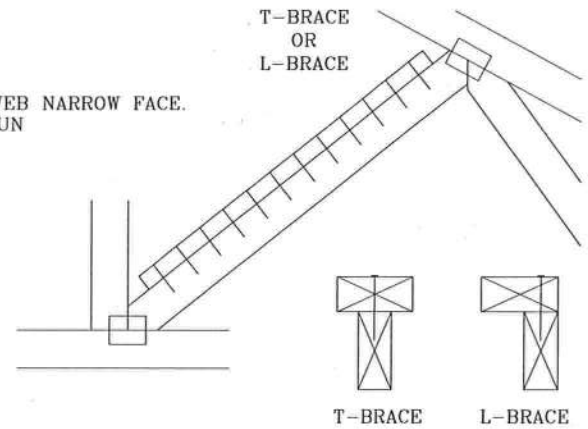

SCAB BRACING:

APPLY SCAB(S) TO WIDE FACE OF WEB.
NO MORE THAN (1) SCAB PER FACE.
ATTACH WITH 10d BOX OR GUN
(0.128"x 3.",MIN) NAILS.
AT 6" O.C.
BRACE IS A MINIMUM
80% OF WEB MEMBER LENGTH

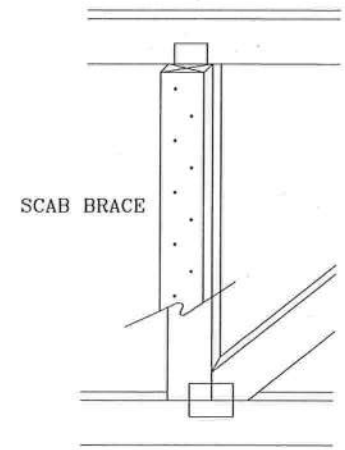

TW Building Components Group Inc.

Earth City, MO 63045

WARNING READ AND FOLLOW ALL NOTES ON THIS SHEET!
Trusses require extreme care in fabricating, handling, shipping, installing and bracing. Refer to and follow BCSI (Building Component Safety Information, by TPI and WTCA) for safety practices prior to performing these functions. Installers shall provide temporary bracing per BCSI. Unless noted otherwise, top chord shall have properly attached structural panels and bottom chord shall have a properly attached rigid ceiling. Locations shown for permanent lateral restraint of webs shall have bracing installed per BCSI sections B3 & B7. See this job's general notes page for more information.

IMPORTANT FURNISH COPY OF THIS DESIGN TO INSTALLATION CONTRACTOR.
ITW Building Components Group Inc. (ITWBCG) shall not be responsible for any deviation from this design, any failure to build the truss in conformance with TPI, or fabricating, handling, shipping, installing & bracing of trusses. ITWBCG connector plates are made of 20/18/16GA (W,H/S/K) ASTM A653 grade 37/40/60 (K/W/H,S) galv. steel. Apply plates to each face of truss, positioned as shown above and on Joint Details. A seal on this drawing or cover page indicates acceptance and professional engineering responsibility solely for the truss component design shown. The suitability and use of this component for any building is the responsibility of the Building Designer per ANST/TPI 1 Sec. 2.
ITW-BCG: www.itwbcg.com; TPI: www.tpinst.com; WTCA: www.sbcindustry.com; ICC: www.iccsafe.org

WILLIAM H. KRICK LICENSE No. 70861 STATE OF FLORIDA PROFESSIONAL ENGINEER

TC LL	PSF	REF CLB SUBST.
TC DL	PSF	DATE 1/1/09
BC DL	PSF	DRWG BRCLBSUB0109
BC LL	PSF	
TOT. LD.	PSF	
DUR. FAC.		
SPACING		

GABLE STUD REINFORCEMENT DETAIL

ASCE 7-05: 110 MPH WIND SPEED, 15' MEAN HEIGHT, ENCLOSED, I = 1.00, EXPOSURE C, Kzt = 1.00

MAX GABLE VERTICAL LENGTH

2X4 GABLE VERTICAL SPACING	SPECIES	BRACE GRADE	NO BRACES	(1) 1X4 "L" BRACE * GROUP A	(1) 1X4 "L" BRACE * GROUP B	(1) 2X4 "L" BRACE * GROUP A	(1) 2X4 "L" BRACE * GROUP B	(2) 2X4 "L" BRACE ** GROUP A	(2) 2X4 "L" BRACE ** GROUP B	(1) 2X6 "L" BRACE * GROUP A	(1) 2X6 "L" BRACE * GROUP B	(2) 2X6 "L" BRACE ** GROUP A	(2) 2X6 "L" BRACE ** GROUP B
24" O.C.	SPF HF	#1 / #2	3' 10"	6' 8"	6' 10"	7' 11"	8' 1"	9' 5"	9' 8"	12' 5"	12' 9"	14' 0"	14' 0"
		#3	3' 9"	6' 0"	6' 0"	7' 11"	7' 11"	9' 5"	9' 5"	12' 4"	12' 4"	14' 0"	14' 0"
		STUD	3' 9"	6' 0"	6' 0"	7' 11"	7' 11"	9' 5"	9' 5"	12' 3"	12' 3"	14' 0"	14' 0"
		STANDARD	3' 9"	5' 2"	5' 2"	6' 9"	6' 9"	9' 1"	9' 1"	10' 7"	10' 7"	14' 0"	14' 0"
	SP DFL	#1	4' 3"	6' 8"	7' 2"	7' 11"	8' 6"	9' 5"	10' 2"	12' 5"	13' 5"	14' 0"	14' 0"
		#2	4' 2"	6' 8"	7' 2"	7' 11"	8' 6"	9' 5"	10' 2"	12' 5"	13' 5"	14' 0"	14' 0"
		#3	4' 0"	6' 2"	6' 2"	7' 11"	8' 1"	9' 5"	9' 11"	12' 5"	12' 8"	14' 0"	14' 0"
		STUD	4' 0"	6' 1"	6' 1"	7' 11"	8' 0"	9' 5"	9' 11"	12' 5"	12' 6"	14' 0"	14' 0"
		STANDARD	3' 10"	5' 3"	5' 3"	6' 11"	6' 11"	9' 4"	9' 4"	10' 10"	10' 10"	14' 0"	14' 0"
16" O.C.	SPF HF	#1 / #2	4' 5"	7' 8"	7' 10"	9' 1"	9' 4"	10' 10"	11' 1"	14' 0"	14' 0"	14' 0"	14' 0"
		#3	4' 4"	7' 4"	7' 4"	9' 1"	9' 1"	10' 10"	10' 10"	14' 0"	14' 0"	14' 0"	14' 0"
		STUD	4' 4"	7' 4"	7' 4"	9' 1"	9' 1"	10' 10"	10' 10"	14' 0"	14' 0"	14' 0"	14' 0"
		STANDARD	4' 4"	6' 4"	6' 4"	8' 4"	8' 4"	10' 10"	10' 10"	12' 11"	12' 11"	14' 0"	14' 0"
	SP DFL	#1	4' 10"	7' 8"	8' 3"	9' 1"	9' 9"	10' 10"	11' 8"	14' 0"	14' 0"	14' 0"	14' 0"
		#2	4' 9"	7' 8"	8' 3"	9' 1"	9' 9"	10' 10"	11' 8"	14' 0"	14' 0"	14' 0"	14' 0"
		#3	4' 6"	7' 7"	7' 7"	9' 1"	9' 6"	10' 10"	11' 4"	14' 0"	14' 0"	14' 0"	14' 0"
		STUD	4' 6"	7' 6"	7' 6"	9' 1"	9' 6"	10' 10"	11' 4"	14' 0"	14' 0"	14' 0"	14' 0"
		STANDARD	4' 5"	6' 5"	6' 5"	8' 6"	8' 6"	10' 10"	11' 1"	13' 3"	13' 3"	14' 0"	14' 0"
12" O.C.	SPF HF	#1 / #2	4' 11"	8' 5"	8' 8"	10' 0"	10' 3"	11' 11"	12' 3"	14' 0"	14' 0"	14' 0"	14' 0"
		#3	4' 9"	8' 5"	8' 5"	10' 0"	10' 0"	11' 11"	11' 11"	14' 0"	14' 0"	14' 0"	14' 0"
		STUD	4' 9"	8' 5"	8' 5"	10' 0"	10' 0"	11' 11"	11' 11"	14' 0"	14' 0"	14' 0"	14' 0"
		STANDARD	4' 9"	7' 3"	7' 3"	9' 7"	9' 7"	11' 11"	11' 11"	14' 0"	14' 0"	14' 0"	14' 0"
	SP DFL	#1	5' 4"	8' 5"	9' 1"	10' 0"	10' 9"	11' 11"	12' 10"	14' 0"	14' 0"	14' 0"	14' 0"
		#2	5' 3"	8' 5"	9' 1"	10' 0"	10' 9"	11' 11"	12' 10"	14' 0"	14' 0"	14' 0"	14' 0"
		#3	5' 0"	8' 5"	8' 5"	10' 0"	10' 6"	11' 11"	12' 6"	14' 0"	14' 0"	14' 0"	14' 0"
		STUD	5' 0"	8' 5"	8' 7"	10' 0"	10' 6"	11' 11"	12' 6"	14' 0"	14' 0"	14' 0"	14' 0"
		STANDARD	4' 11"	7' 5"	7' 5"	9' 10"	9' 10"	11' 11"	12' 3"	14' 0"	14' 0"	14' 0"	14' 0"

BRACING GROUP SPECIES AND GRADES:

GROUP A:

SPRUCE-PINE-FIR

#1 / #2	STANDARD
#3	STUD

HEM-FIR

#2	STUD
#3	STANDARD

DOUGLAS FIR-LARCH

#3
STUD
STANDARD

SOUTHERN PINE

#3
STUD
STANDARD

GROUP B:

HEM-FIR

#1 & BTR
#1

SOUTHERN PINE

#1
#2

DOUGLAS FIR-LARCH

#1
#2

GABLE TRUSS DETAIL NOTES:

LIVE LOAD DEFLECTION CRITERIA IS L/240.

PROVIDE UPLIFT CONNECTIONS FOR 80 PLF OVER CONTINUOUS BEARING (5 PSF TC DEAD LOAD).

GABLE END SUPPORTS LOAD FROM 4' 0" OUTLOOKERS WITH 2' 0" OVERHANG, OR 12" PLYWOOD OVERHANG.

ATTACH EACH "L" BRACE WITH 10d NAILS. (0.128"x3" min)

* FOR (1) "L" BRACE: SPACE NAILS AT 2" O.C. IN 18" END ZONES AND 4" O.C. BETWEEN ZONES.

** FOR (2) "L" BRACES: SPACE NAILS AT 3" O.C. IN 18" END ZONES AND 6" O.C. BETWEEN ZONES.

"L" BRACING MUST BE A MINIMUM OF 80% OF WEB MEMBER LENGTH.

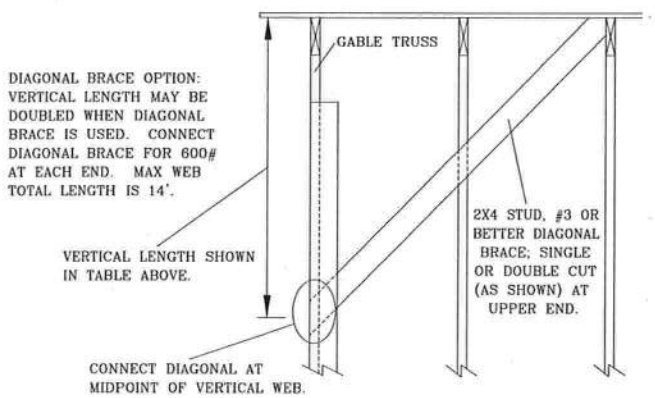

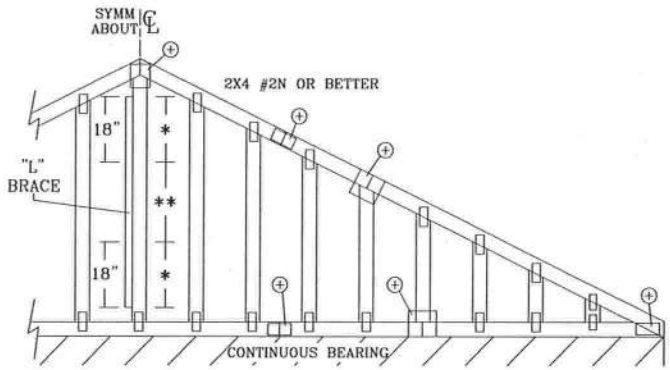

REFER TO CHART ABOVE FOR MAX GABLE VERTICAL LENGTH.

GABLE VERTICAL PLATE SIZES

VERTICAL LENGTH	NO SPLICE
LESS THAN 4' 0"	1X4 OR 2X3
GREATER THAN 4' 0", BUT LESS THAN 11' 6"	2.5X4
GREATER THAN 11' 6"	3X4

\+ REFER TO COMMON TRUSS DESIGN FOR PEAK, SPLICE, AND HEEL PLATES.

TW Building Components Group Inc.

Earth City, MO 63045

WARNING READ AND FOLLOW ALL NOTES ON THIS SHEET!
Trusses require extreme care in fabricating, handling, shipping, installing and bracing. Refer to and follow BCSI (Building Component Safety Information, by TPI and WTCA) for safety practices prior to performing these functions. Installers shall provide temporary bracing per BCSI. Unless noted otherwise, top chord shall have properly attached structural panels and bottom chord shall have a properly attached rigid ceiling. Locations shown for permanent lateral restraint of webs shall have bracing installed per BCSI sections B3 & B7. See this job's general notes page for more information.

IMPORTANT FURNISH COPY OF THIS DESIGN TO INSTALLATION CONTRACTOR.
ITW Building Components Group Inc. (ITWBCG) shall not be responsible for any deviation from this design, any failure to build the truss in conformance with TPI, or fabricating, handling, shipping, installing & bracing of trusses. ITWBCG connector plates are made of 20/18/16GA (W,H/S/K) ASTM A653 grade 37/40/60 (K/W/H,S) galv. steel. Apply plates to each face of truss, positioned as shown above and on Joint Details. A seal on this drawing or cover page indicates acceptance and professional engineering responsibility solely for the truss component design shown. The suitability and use of this component for any building is the responsibility of the Building Designer per ANST/TPI 1 Sec. 2.
ITW-BCG: www.itwbcg.com; TPI: www.tpinst.com; WTCA: www.sbcindustry.com; ICC: www.icesafe.org

WILLIAM H. KNICK LICENSE No. 70661 STATE OF FLORIDA PROFESSIONAL ENGINEER

May 12 10

MAX. TOT. LD. 60 PSF

MAX. SPACING 24.0"

REF	ASCE7-05-GAB11015
DATE	1/1/09
DRWG	A11015050109

GABLE DETAIL
FOR LET-IN VERTICALS

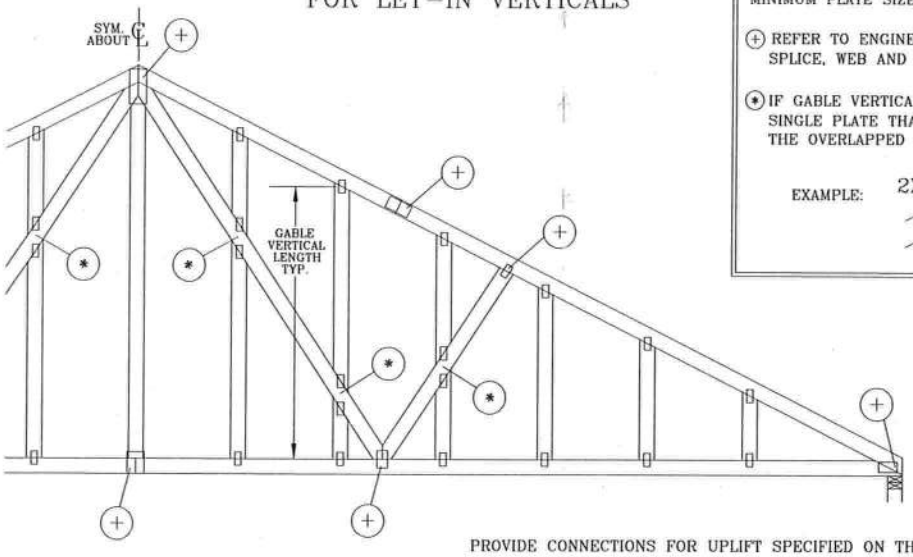

GABLE TRUSS PLATE SIZES

REFER TO APPROPRIATE ITW GABLE DETAIL FOR MINIMUM PLATE SIZES FOR VERTICAL STUDS.

(+) REFER TO ENGINEERED TRUSS DESIGN FOR PEAK, SPLICE, WEB AND HEEL PLATES.

(*) IF GABLE VERTICAL PLATES OVERLAP, USE A SINGLE PLATE THAT COVERS THE TOTAL AREA OF THE OVERLAPPED PLATES TO SPAN THE WEB.

EXAMPLE:

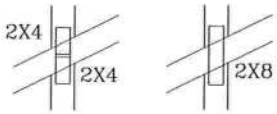

"T" REINFORCEMENT ATTACHMENT DETAIL

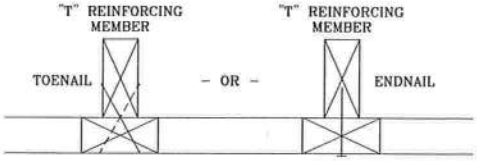

TO CONVERT FROM "L" TO "T" REINFORCING MEMBERS, MULTIPLY "T" INCREASE BY LENGTH (BASED ON APPROPRIATE ITW GABLE DETAIL).

MAXIMUM ALLOWABLE "T" REINFORCED GABLE VERTICAL LENGTH IS 14' FROM TOP TO BOTTOM CHORD.

WEB LENGTH INCREASE W/ "T" BRACE

WIND SPEED AND MRH	"T" REINF. MBR. SIZE	"T" INCREASE
140 MPH	2x4	10 %
15 FT	2x6	50 %
140 MPH	2x4	10 %
30 FT	2x6	50 %
130 MPH	2x4	10 %
15 FT	2x6	50 %
130 MPH	2x4	10 %
30 FT	2x6	50 %
120 MPH	2x4	10 %
15 FT	2x6	50 %
120 MPH	2x4	10 %
30 FT	2x6	40 %
110 MPH	2x4	10 %
15 FT	2x6	40 %
110 MPH	2x4	10 %
30 FT	2x6	50 %
100 MPH	2x4	20 %
15 FT	2x6	30 %
100 MPH	2x4	10 %
30 FT	2x6	40 %
90 MPH	2x4	20 %
15 FT	2x6	20 %
90 MPH	2x4	20 %
30 FT	2x6	30 %

EXAMPLE:
ASCE WIND SPEED = 100 MPH
MEAN ROOF HEIGHT = 30 FT, Kzt = 1.00
GABLE VERTICAL = 24" O.C. SP #3
"T" REINFORCING MEMBER SIZE = 2X4
"T" BRACE INCREASE (FROM ABOVE) = 10% = 1.10
(1) 2X4 "L" BRACE LENGTH = 6' 7"
MAXIMUM "T" REINFORCED GABLE VERTICAL LENGTH
1.10 x 6' 7" = 7' 3"

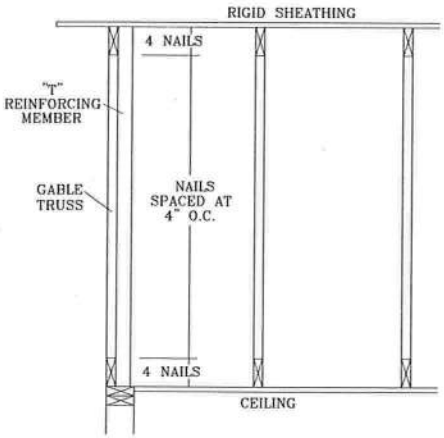

PROVIDE CONNECTIONS FOR UPLIFT SPECIFIED ON THE ENGINEERED TRUSS DESIGN.

ATTACH EACH "T" REINFORCING MEMBER WITH
END DRIVEN NAILS:
10d COMMON (0.148"X 3.",MIN) NAILS AT 4" O.C. PLUS
(4) NAILS IN TOP AND BOTTOM CHORD.

TOENAILED NAILS:
10d COMMON (0.148"x3",MIN) TOENAILS AT 4" O.C. PLUS
(4) TOENAILS IN TOP AND BOTTOM CHORD.

THIS DETAIL TO BE USED WITH THE APPROPRIATE ITW GABLE DETAIL FOR ASCE WIND LOAD.
ASCE 7-98 GABLE DETAIL DRAWINGS
A13015980109, A12015980109, A11015980109, A10015980109,
A13030980109, A12030980109, A11030980109, A10030980109
ASCE 7-02 GABLE DETAIL DRAWINGS
A13015020109, A12015020109, A11015020109, A10015020109, A14015020109,
A13030020109, A12030020109, A11030020109, A10030020109, A14030020109
ASCE 7-05 GABLE DETAIL DRAWINGS
A13015050109, A12015050109, A11015050109, A10015050109, A14015050109,
A13030050109, A12030050109, A11030050109, A10030050109, A14030050109

SEE APPROPRIATE ITW GABLE DETAIL FOR MAXIMUM UNREINFORCED GABLE VERTICAL LENGTH.

ITW
Building Components Group Inc.
Earth City, MO 63045

WARNING READ AND FOLLOW ALL NOTES ON THIS SHEET!
Trusses require extreme care in fabricating, handling, shipping, installing and bracing. Refer to and follow BCSI (Building Component Safety Information, by TPI and WTCA) for safety practices prior to performing these functions. Installers shall provide temporary bracing per BCSI. Unless noted otherwise, top chord shall have properly attached structural panels and bottom chord shall have a properly attached rigid ceiling. Locations shown for permanent lateral restraint of webs shall have bracing installed per BCSI sections B3 & B7. See this job's general notes page for more information.

IMPORTANT FURNISH COPY OF THIS DESIGN TO INSTALLATION CONTRACTOR.
ITW Building Components Group Inc. (ITWBCG) shall not be responsible for any deviation from this design, any failure to build the truss in conformance with TPI, or fabricating, handling, shipping, installing & bracing of trusses. ITWBCG connector plates are made of 20/18/16GA (W,H/S/K) ASTM A653 grade 37/40/60 (K/W/H,S) galv. steel. Apply plates to each face of truss, positioned as shown above and on Joint Details. A seal on this drawing or cover page indicates acceptance and professional engineering responsibility solely for the truss component design shown. The suitability and use of this component for any building is the responsibility of the Building Designer per ANSI/TPI 1 Sec. 2.
ITW-BCG: www.itwbcg.com; TPI: www.tpinst.com; WTCA: www.sbcindustry.com; ICC: www.iccsafe.org

WILLIAM H. KRICK
LICENSE
No. 70361
STATE OF FLORIDA
PROFESSIONAL ENGINEER

MAX TOT. LD. 60 PSF
DUR. FAC. ANY
MAX SPACING 24.0"

REF	LET-IN VERT
DATE	1/1/09
DRWG	GBLLETIN0109

SUBCONTRACTOR VERIFICATION FORM

APPLICATION NUMBER _____ CONTRACTOR KEVIN L. BEDENBAUGH PHONE 386-792-4061

THIS FORM MUST BE SUBMITTED PRIOR TO THE ISSUANCE OF A PERMIT

In Columbia County one permit will cover all trades doing work at the permitted site. It is REQUIRED that we have records of the subcontractors who actually did the trade specific work under the permit. Per Florida Statute 440 and Ordinance 89-6, a contractor shall require all subcontractors to provide evidence of workers' compensation or exemption, general liability insurance and a valid Certificate of Competency license in Columbia County.

Any changes, the permitted contractor is responsible for the corrected form being submitted to this office prior to the start of that subcontractor beginning any work. Violations will result in stop work orders and/or fines.

ELECTRICAL OK	Print Name Donald R Davis License #: EC0002306	Signature Phone #: 386-623-0499
MECHANICAL/ A/C OK	Print Name Joseph W Davis II License #: CAC1816529	Signature Phone #: 386-623-3487
PLUMBING/ GAS OK	Print Name Joseph W Davis II License #: CFCO-57304	Signature Phone #: 386-623-3487
ROOFING	Print Name KEVIN BEDENBAUGH License #: RC0067079	Signature Kevin Bedenbaugh Phone #: 386-755-2422.
SHEET METAL	Print Name License #:	Signature Phone #:
FIRE SYSTEM/ SPRINKLER	Print Name License#:	Signature Phone #:
SOLAR	Print Name License #:	Signature Phone #:

Specialty License	License Number	Sub-Contractors Printed Name	Sub-Contractors Signature
MASON			
CONCRETE FINISHER	CGC1516042	KEVIN L. BEDENBAUGH	KLB
FRAMING	CGC1516042	KEVIN L. BEDENBAUGH	KLB
INSULATION	CGC1516042	KEVIN L. BEDENBAUGH	KLB
STUCCO			
DRYWALL	000621	Jesse Ambros	Jesse Ambros
PLASTER			
CABINET INSTALLER	CGC1516042	KEVIN L. BEDENBAUGH	KLB
PAINTING	CGC1516042	KEVIN L. BEDENBAUGH	KLB
ACOUSTICAL CEILING			
GLASS	000618	CARL BULLARD JR	Carl Bullard Jr
CERAMIC TILE	000876	Ryan C Hardin	Ryan Hardin
FLOOR COVERING	000546	Ryan C Hardin	Ryan Hardin
ALUM/VINYL SIDING	CGC1516042	KEVIN L. BEDENBAUGH	KLB
GARAGE DOOR	000619	CARL BULLARD JR	Carl Bullard Jr
METAL BLDG ERECTOR			

F. S. 440.103 Building permits; identification of minimum premium policy.--Every employer shall, as a condition to applying for and receiving a building permit, show proof and certify to the permit issuer that it has secured compensation for its employees under this chapter as provided in ss. 440.10 and 440.38, and shall be presented each time the employer applies for a building permit.

10.00
5.00
13.00

*THIS INSTRUMENT WAS PREPARED BY:
FIRST FEDERAL BANK OF FLORIDA
4705 WEST U.S. HIGHWAY 90
P.O. BOX 2029
LAKE CITY, FLORIDA 32056

PERMIT NO._____ TAX FOLIO NO._____

NOTICE OF COMMENCEMENT

STATE OF FLORIDA
COUNTY OF Columbia

The undersigned hereby gives notice that improvement will be made to certain real property, and in accordance with Chapter 713, Florida Statutes, the following information is provided in this Notice of Commencement.

1. Description of property: Lot 6, Gables S/D, a s/d according to the plat thereof recorded at Plat Book 9, pages 37-38, public records of COLUMBIA County, Florida.

2. General description of improvement: Construction of Dwelling

3. Owner information:
   a. Name and address: Brian J. Sganga and Melinda D. Sganga

   b. Interest in property: Fee Simple
   c. Name and address of fee simple title holder (if other than Owner): NONE

4. a. Contractor (name and address): Plumb Level Construction Co. LLC 232 NW Chadley Lane, Lake City, FL 32055

   b. Contractor's phone number 386-792-4061

5. Surety:
   a. Name and address: N/A

   b. Phone Number

   c. Amount of bond:

Inst:201012007379 Date:5/11/2010 Time:8:38 AM
DC,P.DeWitt Cason,Columbia County Page 1 of 1 B:1194 P:152

6. Lender FIRST FEDERAL BANK OF FLORIDA
   4705 WEST U.S. HIGHWAY 90
   P. O. BOX 2029
   LAKE CITY, FLORIDA 32056
   (386) 755-0600

7. Persons within the State of Florida designated by Owner upon whom notices or other document may be served as provided by Section 713.13 (1) (a) 7., Florida Statutes. NONE

8. In addition to himself, Owner designates PAULA HACKER of FIRST FEDERAL BANK OF FLORIDA, 4705 West U.S. Highway 90 / P. O. Box 2029, Lake City, Florida 32056 to receive a copy of the Lienor's Notice as provided in Section 713.13 (1) (b), Florida Statutes.

9. Expiration date of notice of commencement (the expiration date is 1 year from the date of recording unless a different date is specified).

WARNING TO OWNER: ANY PAYMENTS MADE BY THE OWNER AFTER THE EXPIRATION OF THE NOTICE OF COMMENCEMENT ARE CONSIDERED IMPROPER PAYMENTS UNDER CHAPTER 713, PART I, SECTION 713, 13, FLORIDA STATUTES AND CAN RESULT IN YOUR PAYING TWICE FOR IMPROVEMENTS TO YOUR PROPERTY. A NOTICE OF COMMENCEMENT MUST BE RECORDED AND POSTED ON THE JOB SITE BEFORE THE FIRST INSPECTION. IF YOU INTEND TO OBTAIN FINANCING, CONSULT WITH YOUR LENDER OR AN ATTORNEY BEFORE COMMENCING WORK OR RECORDING YOUR NOTICE OF COMMENCEMENT.

Signature of Owner or Owner's Authorized Officer/Director Partner/Manager

Signatory's Title/Office

The foregoing instrument was acknowledged before me this 10th day of May, 2010 by BRIAN J. SGANGA & MELINDA D. SGANGA (name of person) as N/A (type of authority, e.g. officer, trustee, attorney in fact) for: (name of party on behalf of whom instrument was executed.

ANDREA L. WALDEN
MY COMMISSION # DD 687722
EXPIRES: October 21, 2011
Bonded Thru Budget Notary Services

Signature of Notary Public – State of Florida
Print, Type, or Stamp Commission Name of Notary
Public Commission Number:
Personally Known _____ or Produced Identification FLD/L

Verification Pursuant to Section 92.525, Florida Statutes

Under penalties of perjury, I declare that I have read the foregoing and that the facts stated in it are true to the best of my knowledge and belief.

Signature of Natural Person Signing Above

(RC)

4315

Columbia County Building Permit Application

For Office Use Only Application # 1005-50 Date Received 5/24/10 By G Permit # 182228623

Zoning Official BLK Date 28.05.10 Flood Zone X Land Use A-3 Zoning A-3

FEMA Map # N/A Elevation N/A MFE Ft above Rd River N/A Plans Examiner HD Date 5-27-10

Comments

☑ NOC ☑ EH ☑ Deed or PA ☑ Site Plan ☐ State Road Info ☐ Parent Parcel #

☐ Dev Permit # ☐ In Floodway ☐ Letter of Auth. from Contractor ☐ F W Comp. letter

IMPACT FEES: EMS Fire Corr Road/Code

School = TOTAL Suspended ☑ UF ☑ 911 Address

Septic Permit No. 10-0249 Fax 386-755-2422

Name Authorized Person Signing Permit KEVIN BEDENBAUGH Phone 386-792-4061

Address 232 NW CHADLEY LN LAKE City, FL 32055

Owners Name BRIAN & MELINDA SGANGA Phone 386-288-4354

911 Address 497 NW GABLES GLEN LAKE City, FL 32055

Contractors Name PLUMB LEVEL CONSTRUCTION CO LLC. Phone 386-755-2422

Address 232 NW Chadley LN Lake City, FL 32055

Fee Simple Owner Name & Address

Bonding Co. Name & Address

Architect/Engineer Name & Address K & J Drafting & Design, MARK DISOSWAY PO BX 868 LAKE City, 3205

Mortgage Lenders Name & Address FIRST Federal SAVINGS BANK, Lake City, FL

Circle the correct power company – FL Power & Light – Clay Elec. – Suwannee Valley Elec. – Progress Energy

Property ID Number 06-3S-16-02017-106 Estimated Cost of Construction $200,000

Subdivision Name Gables Lot 6 Block Unit Phase

Driving Directions 90 WEST, TURN (R) ONTO LAKE Jeffery Hwy, CROSS I-75 go 1mile TURN (L) on Gables glen, LAST LOT ON (L) Before cul-de-sac.

Number of Existing Dwellings on Property Ø

Construction of Single Family Dwelling Total Acreage 4.7 Lot Size

Do you need a Culvert Permit or Culvert Waiver or Have an Existing Drive Total Building Height 19'

Actual Distance of Structure from Property Lines - Front 125' Side 215' Side 152' Rear 240'

Number of Stories 1 Heated Floor Area 2544 Total Floor Area 3512 Roof Pitch 6/12

Application is hereby made to obtain a permit to do work and installations as indicated. I certify that no work or installation has commenced prior to the issuance of a permit and that all work be performed to meet the standards of all laws regulating construction in this jurisdiction.

Spoke to Kevin on 5-28-10 LH

Columbia County Building Permit Application

TIME LIMITATIONS OF APPLICATION : An application for a permit for any proposed work shall be deemed to have been abandoned 180 days after the date of filing, unless such application has been pursued in good faith or a permit has been issued; except that the building official is authorized to grant one or more extensions of time for additional periods not exceeding 90 days each. The extension shall be requested in writing and justifiable cause demonstrated.

TIME LIMITATIONS OF PERMITS: Every permit issued shall become invalid unless the work authorized by such permit is commenced within 180 days after its issuance, or if the work authorized by such permit is suspended or abandoned for a period of 180 days after the time work is commenced. A valid permit receives an approved inspection every 180 days. Work shall be considered not suspended, abandoned or invalid when the permit has received an approved inspection within 180 days of the previous approved inspection.

FLORIDA'S CONSTRUCTION LIEN LAW: Protect Yourself and Your Investment: According to Florida Law, those who work on your property or provide materials, and are not paid-in-full, have a right to enforce their claim for payment against your property. This claim is known as a construction lien. If your contractor fails to pay subcontractors or material suppliers or neglects to make other legally required payments, the people who are owed money may look to your property for payment, even if you have paid your contractor in full.
This means if a lien is filed against your property, it could be sold against your will to pay for labor, materials or other services which your contractor may have failed to pay.

NOTICE OF RESPONSIBILITY TO BUILDING PERMITEE: ***YOU ARE HEREBY NOTIFIED*** as the recipient of a building permit from Columbia County, Florida, you will be held responsible to the County for any damage to sidewalks and/or road curbs and gutters, concrete features and structures, together with damage to drainage facilities, removal of sod, major changes to lot grades that result in ponding of water, or other damage to roadway and other public infrastructure facilities caused by you or your contractor, subcontractors, agents or representatives in the construction and/or improvement of the building and lot for which this permit is issued. No certificate of occupancy will be issued until all corrective work to these public infrastructures and facilities has been corrected.

WARNING TO OWNER: YOUR FAILURE TO RECORD A NOTICE OF COMMENCMENT MAY RESULT IN YOU PAYING TWICE FOR IMPROVEMENTS TO YOUR PROPERTY. A NOTICE OF COMMENCEMENT MUST BE RECORDED AND POSTED ON THE JOB SITE BEFORE THE FIRST INSPECTION. IF YOU INTEND TO OBTAIN FINANCING, CONSULT WITH YOUR LENDER OR ATTORNEY BEFORE RECORDING YOUR NOTICE OF COMMENCEMENT.

OWNERS CERTIFICATION: I CERTIFY THAT ALL THE FOREGOING INFORMATION IS ACCURATE AND THAT ALL WORK WILL BE DONE IN COMPLIANCE WITH ALL APPLICABLE LAWS REGULATING CONSTRUCTION AND ZONING.

NOTICE TO OWNER: There are some properties that may have deed restrictions recorded upon them. These restrictions may limit or prohibit the work applied for in your building permit. It may be to your advantage to check and see if your property is encumbered by any restrictions.

(Owners Must Sign All Applications Before Permit Issuance.)

Owners Signature ****OWNER BUILDERS MUST PERSONALLY APPEAR AND SIGN THE BUILDING PERMIT.**

CONTRACTORS AFFIDAVIT: By my signature I understand and agree that I have informed and provided this written statement to the owner of all the above written responsibilities in Columbia County for obtaining this Building Permit including all application and permit time limitations.

Contractor's Signature (Permitee)

Contractor's License Number CGC 1576042
Columbia County
Competency Card Number

Affirmed under penalty of perjury to by the Contractor and subscribed before me this 24 **day of** May **20**10.

Personally known X **or Produced Identification**

State of Florida Notary Signature (For the Contractor)

SEAL

STEPHANIE BURNS
MY COMMISSION EXPIRES
August 2, 2011
#DD 701259
Bonded thru
Troy Fain- Insurance
NOTARY PUBLIC, STATE OF FLORIDA

COLUMBIA COUNTY 9-1-1 ADDRESSING

P. O. Box 1787, Lake City, FL 32056-1787
PHONE: (386) 758-1125 * FAX: (386) 758-1365 * Email: ron_croft@columbiacountyfla.com

Addressing Maintenance

To maintain the Countywide Addressing Policy you must make application for a 9-1-1 Address at the time you apply for a building permit. The established standards for assigning and posting numbers to all principal buildings, dwellings, businesses and industries are contained in Columbia County Ordinance 2001-9. The addressing system is to enable Emergency Service Agencies to locate you in an emergency, and to assist the United States Postal Service and the public in the timely and efficient provision of services to residents and businesses of Columbia County.

DATE REQUESTED: 12/15/2009 **DATE ISSUED:** 12/15/2009

ENHANCED 9-1-1 ADDRESS:

497 NW GABLES GLN

LAKE CITY FL 32055

PROPERTY APPRAISER PARCEL NUMBER:

06-3S-16-02017-106

Remarks:

LOT 6 GABLES

Address Issued By: _____

Columbia County 9-1-1 Addressing / GIS Department

NOTICE: THIS ADDRESS WAS ISSUED BASED ON LOCATION INFORMATION RECEIVED FROM THE REQUESTER. SHOULD, AT A LATER DATE, THE LOCATION INFORMATION BE FOUND TO BE IN ERROR, THIS ADDRESS IS SUBJECT TO CHANGE.

1604

Columbia County Building Department
Culvert Permit

Culvert Permit No.
000001822

DATE 06/03/2010 PARCEL ID # 06-3S-16-02017-106

APPLICANT KEVIN BEDENBAUGH PHONE 386 792-4061

ADDRESS 232 NW CHADLEY LANE LAKE CITY FL 32055

OWNER BRIAN & MELINDA SGANGA PHONE 288-4354

ADDRESS 497 NW GABLES GLEN LAKE CITY FL 32055

CONTRACTOR KEVIN BEDENBAUGH PHONE 386 792-4061

LOCATION OF PROPERTY 90W, TR LAKE JEFFERY HIGHWAY, TL GABLES GLEN, LAST LOT ON LEFT

SUBDIVISION/LOT/BLOCK/PHASE/UNIT GABLES 6

SIGNATURE X

INSTALLATION REQUIREMENTS

[X] Culvert size will be 18 inches in diameter with a total lenght of 32 feet, leaving 24 feet of driving surface. Both ends will be mitered 4 foot with a 4 : 1 slope and poured with a 4 inch thick reinforced concrete slab.

INSTALLATION NOTE: Turnouts will be required as follows:
a) a majority of the current and existing driveway turnouts are paved, or;
b) the driveway to be served will be paved or formed with concrete.
Turnouts shall be concrete or paved a minimum of 12 feet wide or the width of the concrete or paved driveway, whichever is greater. The width shall conform to the current and existing paved or concreted turnouts.

[ ] Culvert installation shall conform to the approved site plan standards.

[ ] Department of Transportation Permit installation approved standards.

[ ] Other

ALL PROPER SAFETY REQUIREMENTS SHOULD BE FOLLOWED DURING THE INSTALATION OF THE CULVERT.

135 NE Hernando Ave., Suite B-21
Lake City, FL 32055
Phone: 386-758-1008 Fax: 386-758-2160

Amount Paid 25.00

COLUMBIA COUNTY GATEWAY TO FLORIDA

FORM 1100A-08

FLORIDA ENERGY EFFICIENCY CODE FOR BUILDING CONSTRUCTION

Florida Department of Community Affairs Residential Performance Method A

Project Name:	1005027SgangaRes	Builder Name:	Kevin Bedenbaugh
Street:		Permit Office:	Columbia County
City, State, Zip:	, FL ,	Permit Number:	28623
Owner:	Brian & Melinda Sganga	Jurisdiction:	221000
Design Location:	FL, Gainesville		

1. New construction or existing	New (From Plans)
2. Single family or multiple family	Single-family
3. Number of units, if multiple family	1
4. Number of Bedrooms	3
5. Is this a worst case?	Yes
6. Conditioned floor area (ft²)	2544

7. Windows	Description	Area
a. U-Factor:	Dbl, U=0.30	659.00 ft²
SHGC:	SHGC=0.30	
b. U-Factor:	N/A	ft²
SHGC:		
c. U-Factor:	N/A	ft²
SHGC:		
d. U-Factor:	N/A	ft²
SHGC:		
e. U-Factor:	N/A	ft²
SHGC:		

8. Floor Types	Insulation	Area
a. Slab-On-Grade Edge Insulation	R=0.0	2544.00 ft²
b. N/A	R=	ft²
c. N/A	R=	ft²

9. Wall Types	Insulation	Area
a. Frame - Wood, Exterior	R=13.0	2320.00 ft²
b. Frame - Wood, Adjacent	R=13.0	240.00 ft²
c. N/A	R=	ft²
d. N/A	R=	ft²

10. Ceiling Types	Insulation	Area
a. Under Attic (Vented)	R=30.0	2544.00 ft²
b. Knee Wall (Vented)	R=30.0	50.00 ft²
c. N/A	R=	ft²

11. Ducts
a. Sup: Attic Ret: Attic AH: Garage Sup. R= 6, 508.8 ft²

12. Cooling systems
a. Central Unit — Cap: 57.0 kBtu/hr, SEER: 13

13. Heating systems
a. Electric Heat Pump — Cap: 57.0 kBtu/hr, HSPF: 7.8

14. Hot water systems
a. Electric — Cap: 1 gallons, EF: 0.92

b. Conservation features
None

15. Credits — Pstat

Glass/Floor Area: 0.259

Total As-Built Modified Loads: 42.31
Total Baseline Loads: 50.65

PASS

I hereby certify that the plans and specifications covered by this calculation are in compliance with the Florida Energy Code.

PREPARED BY: _____
DATE: 5/13/10 EVAN BEAMSLEY

I hereby certify that this building, as designed, is in compliance with the Florida Energy Code.

OWNER/AGENT: _____
DATE: _____

Review of the plans and specifications covered by this calculation indicates compliance with the Florida Energy Code. Before construction is completed this building will be inspected for compliance with Section 553.908 Florida Statutes.

BUILDING OFFICIAL: _____
DATE: _____

PROJECT

Title:	1005027SgangaRes	Bedrooms:	3	Adress Type:	Street Address
Building Type:	FLAsBuilt	Conditioned Area:	2544	Lot #	
Owner:	Brian & Melinda Sganga	Total Stories:	1	SubDivision:	
# of Units:	1	Worst Case:	Yes	PlatBook:	
Builder Name:		Rotate Angle:	90	Street:	
Permit Office:		Cross Ventilation:		County:	Columbia
Jurisdiction:		Whole House Fan:		City, State, Zip:	, FL ,
Family Type:	Single-family				
New/Existing:	New (From Plans)				
Comment:					

CLIMATE

√	Design Location	TMY Site	IECC Zone	Design Temp 97.5 %	Design Temp 2.5 %	Int Design Temp Winter	Int Design Temp Summer	Heating Degree Days	Design Moisture	Daily Temp Range
____	FL, Gainesville	FL_GAINESVILLE_REGI	2	32	92	75	70	1305.5	51	Medium

FLOORS

√	#	Floor Type	Perimeter	R-Value	Area	Tile	Wood	Carpet
____	1	Slab-On-Grade Edge Insulatio	256 ft	0	2544 ft²	0.3	0.3	0.4

ROOF

√	#	Type	Materials	Roof Area	Gable Area	Roof Color	Solar Absor.	Tested	Deck Insul.	Pitch
____	1	Gable or shed	Composition shingles	2845 ft²	636 ft²	Dark	0.96	No	0	26.6 deg

ATTIC

√	#	Type	Ventilation	Vent Ratio (1 in)	Area	RBS	IRCC
____	1	Full attic	Vented	300	2544 ft²	N	N

CEILING

√	#	Ceiling Type	R-Value	Area	Framing Frac	Truss Type
____	1	Under Attic (Vented)	30	2544 ft²	0.11	Wood
____	2	Knee Wall (Vented)	30	50 ft²	0.11	Wood

WALLS

√	#	Ornt	Adjacent To	Wall Type	Cavity R-Value	Area	Sheathing R-Value	Framing Fraction	Solar Absor.
____	1	N	Exterior	Frame - Wood	13	840 ft²		0.23	0.75
____	2	E	Exterior	Frame - Wood	13	440 ft²		0.23	0.75
____	3	S	Exterior	Frame - Wood	13	600 ft²		0.23	0.75
____	4	W	Exterior	Frame - Wood	13	440 ft²		0.23	0.75
____	5	S	Garage	Frame - Wood	13	240 ft²		0.23	0.01

DOORS

√	#	Ornt	Door Type	Storms	U-Value	Area
____	1	E	Insulated	None	0.4	8 ft²
____	2	N	Insulated	None	0.4	24 ft²
____	3	N	Insulated	None	0.4	24 ft²
____	4	S	Insulated	None	0.4	24 ft²
____	5	W	Insulated	None	0.4	8 ft²

WINDOWS

Orientation shown is the entered orientation (=>) changed to Worst Case.

√	#	Ornt	Frame	Panes	NFRC	U-Factor	SHGC	Storms	Area	Overhang Depth	Overhang Separation	Int Shade	Screening
____	1	N=>E	Metal	Low-E Double	Yes	0.3	0.3	N	35 ft²	1 ft 6 in	2 ft 0 in	HERS 2006	None
____	2	N=>E	Metal	Low-E Double	Yes	0.3	0.3	N	70 ft²	1 ft 6 in	2 ft 0 in	HERS 2006	None
____	3	E=>S	Metal	Low-E Double	Yes	0.3	0.3	N	84 ft²	1 ft 6 in	6 ft 0 in	HERS 2006	None
____	4	E=>S	Metal	Low-E Double	Yes	0.3	0.3	N	8 ft²	1 ft 6 in	6 ft 0 in	HERS 2006	None
____	5	S=>W	Metal	Low-E Double	Yes	0.3	0.3	N	105 ft²	1 ft 6 in	2 ft 0 in	HERS 2006	None
____	6	S=>W	Metal	Low-E Double	Yes	0.3	0.3	N	126 ft²	7 ft 6 in	2 ft 0 in	HERS 2006	None
____	7	S=>W	Metal	Low-E Double	Yes	0.3	0.3	N	16 ft²	7 ft 6 in	2 ft 0 in	HERS 2006	None
____	8	W=>N	Metal	Low-E Double	Yes	0.3	0.3	N	35 ft²	1 ft 6 in	6 ft 0 in	HERS 2006	None
____	9	W=>N	Metal	Low-E Double	Yes	0.3	0.3	N	20 ft²	1 ft 6 in	6 ft 0 in	HERS 2006	None
____	10	E=>S	Metal	Low-E Double	Yes	0.3	0.3	N	16 ft²	31 ft 6 in	2 ft 0 in	HERS 2006	None
____	11	N=>E	Metal	Low-E Double	Yes	0.3	0.3	N	144 ft²	9 ft 6 in	2 ft 0 in	HERS 2006	None

INFILTRATION & VENTING

√	Method	SLA	CFM 50	ACH 50	ELA	EqLA	---- Forced Ventilation ---- Supply CFM	Exhaust CFM	Run Time Fraction	Fan Watts
____	Default	0.00036	2402	5.67	131.9	248.0	0 cfm	0 cfm	0	0

GARAGE

√	#	Floor Area	Ceiling Area	Exposed Wall Perimeter	Avg. Wall Height	Exposed Wall Insulation
____	1	576 ft²	576 ft²	72 ft	10 ft	(invalid)

COOLING SYSTEM

√	#	System Type	Subtype	Efficiency	Capacity	Air Flow	SHR	Ducts
____	1	Central Unit	None	SEER: 13	57 kBtu/hr	1710 cfm	0.75	sys#1

HEATING SYSTEM

√	#	System Type	Subtype	Efficiency	Capacity	Ducts
____	1	Electric Heat Pump	None	HSPF: 7.8	57 kBtu/hr	sys#1

HOT WATER SYSTEM

√	#	System Type	EF	Cap	Use	SetPnt	Conservation
_____	1	Electric	0.92	1 gal	60 gal	120 deg	None

SOLAR HOT WATER SYSTEM

√	FSEC Cert #	Company Name	System Model #	Collector Model #	Collector Area	Storage Volume	FEF
_____	None	None			ft²		

DUCTS

√	#	---- Supply ---- Location	R-Value	Area	---- Return ---- Location	Area	Leakage Type	Air Handler	CFM 25	Percent Leakage	QN	RLF
_____	1	Attic	6	508.8 ft	Attic	127.2 ft	Default Leakage	Garage	(Default)	(Default) %		

TEMPERATURES

Programable Thermostat: Y

Ceiling Fans:

	Jan	Feb	Mar	Apr	May	Jun	Jul	Aug	Sep	Oct	Nov	Dec
Cooling	[X]	[X]	[X]	[X]	[X]	[X]	[X]	[X]	[X]	[X]	[X]	[X]
Heating	[X]	[X]	[X]	[X]	[X]	[X]	[X]	[X]	[X]	[X]	[X]	[X]
Venting	[X]	[X]	[X]	[X]	[X]	[X]	[X]	[X]	[X]	[X]	[X]	[X]

Thermostat Schedule: HERS 2006 Reference

Schedule Type		Hours 1	2	3	4	5	6	7	8	9	10	11	12
Cooling (WD)	AM	78	78	78	78	78	78	78	78	80	80	80	80
	PM	80	80	78	78	78	78	78	78	78	78	78	78
Cooling (WEH)	AM	78	78	78	78	78	78	78	78	78	78	78	78
	PM	78	78	78	78	78	78	78	78	78	78	78	78
Heating (WD)	AM	66	66	66	66	66	68	68	68	68	68	68	68
	PM	68	68	68	68	68	68	68	68	68	68	66	66
Heating (WEH)	AM	66	66	66	66	66	68	68	68	68	68	68	68
	PM	68	68	68	68	68	68	68	68	68	68	66	66

FORM 1100A-08

Code Compliance Cheklist

Residential Whole Building Performance Method A - Details

ADDRESS:	PERMIT #:
, FL,	

INFILTRATION REDUCTION COMPLIANCE CHECKLIST

COMPONENTS	SECTION	REQUIREMENTS FOR EACH PRACTICE	CHECK
Exterior Windows & Doors	N1106.AB.1.1	Maximum: .3 cfm/sq.ft. window area; .5 cfm/sq.ft. door area.	
Exterior & Adjacent Walls	N1106.AB.1.2.1	Caulk, gasket, weatherstrip or seal between: windows/doors & frames, surrounding wall; foundation & wall sole or sill plate; joints between exterior wall panels at corners; utility penetrations; between wall panels & top/bottom plates; between walls and floor. EXCEPTION: Frame walls where a continuous infiltration barrier is installed that extends from, and is sealed to, the foundation to the top plate.	
Floors	N1106.AB.1.2.2	Penetrations/openings > 1/8" sealed unless backed by truss or joint members. EXCEPTION: Frame floors where a continuous infiltration barrier is installed that is sealed to the perimeter, penetrations and seams.	
Ceilings	N1106.AB.1.2.3	Between walls & ceilings; penetrations of ceiling plane to top floor; around shafts, chases, soffits, chimneys, cabinets sealed to continuous air barrier; gaps in gyp board & top plate; attic access. EXCEPTION: Frame ceilings where a continuous infiltration barrier is installed that is sealed at the perimeter, at penetrations and seams.	
Recessed Lighting Fixtures	N1106.AB.1.2.4	Type IC rated with no penetrations, sealed; or Type IC or non-IC rated, installed inside a sealed box with 1/2" clearance & 3" from insulation; or Type IC with < 2.0 cfm from conditioned space, tested.	
Multi-story Houses	N1106.AB.1.2.5	Air barrier on perimeter of floor cavity between floors.	
Additional Infiltration reqts	N1106.AB.1.3	Exhaust fans vented to outdoors, dampers; combustion space heaters comply with NFPA, have combustion air.	

OTHER PRESCRIPTIVE MEASURES (must be met or exceeded by all residences.)

COMPONENTS	SECTION	REQUIREMENTS	CHECK
Water Heaters	N1112.AB.3	Comply with efficiency requirements in Table N112.ABC.3. Switch or clearly marked circuit breaker (electric) or cutoff (gas) must be provided. External or built-in heat trap required.	
Swimming Pools & Spas	N1112.AB.2.3	Spas & heated pools must have covers (except solar heated). Non-commercial pools must have a pump timer. Gas spa & pool heaters must have a minimum thermal efficiency of 78%. Heat pump pool heaters shall have a minimum COP of 4.0.	
Shower heads	N1112.AB.2.4	Water flow must be restricted to no more than 2.5 gallons per minute at 80 PSIG.	
Air Distribution Systems	N1110.AB	All ducts, fittings, mechanical equipment and plenum chambers shall be mechanically attached, sealed, insulated and installed in accordance with the criteria of Section N1110.AB. Ducts in unconditioned attics: R-6 min. insulation.	
HVAC Controls	N1107.AB.2	Separate readily accessible manual or automatic thermostat for each system.	
Insulation	N1104.AB.1 N1102.B.1.1	Ceilings-Min. R-19. Common walls-frame R-11 or CBS R-3 both sides. Common ceiling & floors R-11.	

ENERGY PERFORMANCE LEVEL (EPL) DISPLAY CARD

ESTIMATED ENERGY PERFORMANCE INDEX* = 84

The lower the EnergyPerformance Index, the more efficient the home.

, , FL,

1. New construction or existing	New (From Plans)
2. Single family or multiple family	Single-family
3. Number of units, if multiple family	1
4. Number of Bedrooms	3
5. Is this a worst case?	Yes
6. Conditioned floor area (ft²)	2544

7. Windows**	Description	Area
a. U-Factor:	Dbl, U=0.30	659.00 ft²
SHGC:	SHGC=0.30	
b. U-Factor:	N/A	ft²
SHGC:		
c. U-Factor:	N/A	ft²
SHGC:		
d. U-Factor:	N/A	ft²
SHGC:		
e. U-Factor:	N/A	ft²
SHGC:		

8. Floor Types	Insulation	Area
a. Slab-On-Grade Edge Insulation	R=0.0	2544.00 ft²
b. N/A	R=	ft²
c. N/A	R=	ft²

9. Wall Types	Insulation	Area
a. Frame - Wood, Exterior	R=13.0	2320.00 ft²
b. Frame - Wood, Adjacent	R=13.0	240.00 ft²
c. N/A	R=	ft²
d. N/A	R=	ft²

10. Ceiling Types	Insulation	Area
a. Under Attic (Vented)	R=30.0	2544.00 ft²
b. Knee Wall (Vented)	R=30.0	50.00 ft²
c. N/A	R=	ft²

11. Ducts
a. Sup: Attic Ret: Attic AH: Garage Sup. R= 6, 508.8 ft²

12. Cooling systems
a. Central Unit — Cap: 57.0 kBtu/hr, SEER: 13

13. Heating systems
a. Electric Heat Pump — Cap: 57.0 kBtu/hr, HSPF: 7.8

14. Hot water systems
a. Electric — Cap: 1 gallons, EF: 0.92

b. Conservation features
None

15. Credits — Pstat

I certify that this home has complied with the Florida Energy Efficiency Code for Building Construction through the above energy saving features which will be installed (or exceeded) in this home before final inspection. Otherwise, a new EPL Display Card will be completed based on installed Code compliant features.

Builder Signature: _____ Date: _____

Address of New Home: _____ City/FL Zip: _____

*Note: The home's estimated Energy Performance Index is only available through the EnergyGauge USA - FlaRes2008 computer program. This is not a Building Energy Rating. If your Index is below 100, your home may qualify for incentives if you obtain a Florida Energy Gauge Rating. Contact the Energy Gauge Hotline at (321) 638-1492 or see the Energy Gauge web site at energygauge.com for information and a list of certified Raters. For information about Florida's Energy Efficiency Code for Building Construction, contact the Department of Community Affairs at (850) 487-1824.

**Label required by Section 13-104.4.5 of the Florida Building Code, Building, or Section B2.1.1 of Appendix G of the Florida Building Code, Residential, if not DEFAULT.

Residential System Sizing Calculation

Summary

Brian & Melinda Sganga

Project Title:
1005027SgangaRes

, FL

5/13/2010

Location for weather data: Gainesville, FL - Defaults: Latitude(29.7) Altitude(152 ft.) Temp Range(M)					
Humidity data: Interior RH (50%) Outdoor wet bulb (77F) Humidity difference(54gr.)					
Winter design temperature(MJ8 99%)	33	F	Summer design temperature(MJ8 99%)	92	F
Winter setpoint	70	F	Summer setpoint	75	F
Winter temperature difference	37	F	Summer temperature difference	17	F
Total heating load calculation	**43172**	**Btuh**	**Total cooling load calculation**	**48295**	**Btuh**
Submitted heating capacity	% of calc	Btuh	Submitted cooling capacity	% of calc	Btuh
Total (Electric Heat Pump)	132.0	57000	Sensible (SHR = 0.75)	108.5	42750
Heat Pump + Auxiliary(0.0kW)	132.0	57000	Latent	160.2	14250
			Total (Electric Heat Pump)	118.0	57000

WINTER CALCULATIONS

Winter Heating Load (for 2544 sqft)

Load component			Load	
Window total	659	sqft	7315	Btuh
Wall total	1813	sqft	5954	Btuh
Door total	88	sqft	1302	Btuh
Ceiling total	2594	sqft	3057	Btuh
Floor total	2544	sqft	11177	Btuh
Infiltration	212	cfm	8587	Btuh
Duct loss			5780	Btuh
Subtotal			**43172**	**Btuh**
Ventilation	0	cfm	0	Btuh
TOTAL HEAT LOSS			**43172**	**Btuh**

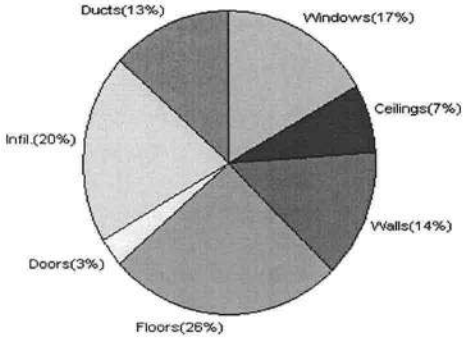

SUMMER CALCULATIONS

Summer Cooling Load (for 2544 sqft)

Load component			Load	
Window total	659	sqft	16333	Btuh
Wall total	1813	sqft	3657	Btuh
Door total	88	sqft	986	Btuh
Ceiling total	2594	sqft	4296	Btuh
Floor total			0	Btuh
Infiltration	170	cfm	3156	Btuh
Internal gain			3780	Btuh
Duct gain			7195	Btuh
Sens. Ventilation	0	cfm	0	Btuh
Blower Load			0	Btuh
Total sensible gain			**39403**	**Btuh**
Latent gain(ducts)			1494	Btuh
Latent gain(infiltration)			6198	Btuh
Latent gain(ventilation)			0	Btuh
Latent gain(internal/occupants/other)			1200	Btuh
Total latent gain			**8893**	**Btuh**
TOTAL HEAT GAIN			**48295**	**Btuh**

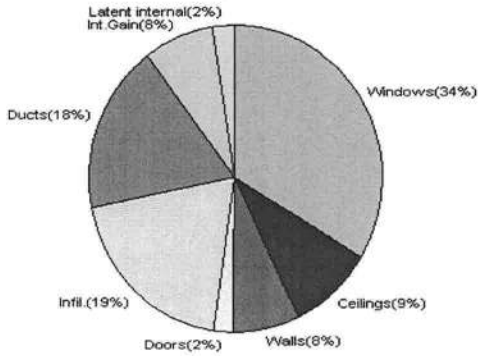

8th Edition

EnergyGauge® System Sizing
PREPARED BY: _____
DATE: 5/13/10 EVAN BERMSLIGY

System Sizing Calculations - Winter

Residential Load - Whole House Component Details

Brian & Melinda Sganga

Project Title:
1005027SgangaRes

, FL

Building Type: User

5/13/2010

Reference City: Gainesville, FL (Defaults) Winter Temperature Difference: 37.0 F (MJ8 99%)
This calculation is for Worst Case. The house has been rotated 270 degrees.

Component Loads for Whole House

Window	Panes/Type	Frame	U	Orientation	Area(sqft) X	HTM=	Load
1	2, NFRC 0.30	Metal	0.30	W	35.0	11.1	388 Btuh
2	2, NFRC 0.30	Metal	0.30	W	70.0	11.1	777 Btuh
3	2, NFRC 0.30	Metal	0.30	N	84.0	11.1	932 Btuh
4	2, NFRC 0.30	Metal	0.30	N	8.0	11.1	89 Btuh
5	2, NFRC 0.30	Metal	0.30	E	105.0	11.1	1166 Btuh
6	2, NFRC 0.30	Metal	0.30	E	126.0	11.1	1399 Btuh
7	2, NFRC 0.30	Metal	0.30	E	16.0	11.1	178 Btuh
8	2, NFRC 0.30	Metal	0.30	S	35.0	11.1	388 Btuh
9	2, NFRC 0.30	Metal	0.30	S	20.0	11.1	222 Btuh
10	2, NFRC 0.30	Metal	0.30	N	16.0	11.1	178 Btuh
11	2, NFRC 0.30	Metal	0.30	W	144.0	11.1	1598 Btuh
	Window Total				659.0(sqft)		7315 Btuh

Walls	Type	Ornt.	Ueff.	R-Value (Cav/Sh)	Area X	HTM=	Load
1	Frame - Wood	- Ext	(0.089)	13.0/0.0	543	3.28	1783 Btuh
2	Frame - Wood	- Ext	(0.089)	13.0/0.0	324	3.28	1064 Btuh
3	Frame - Wood	- Ext	(0.089)	13.0/0.0	353	3.28	1159 Btuh
4	Frame - Wood	- Ext	(0.089)	13.0/0.0	377	3.28	1238 Btuh
5	Frame - Wood	- Adj	(0.089)	13.0/0.0	216	3.28	709 Btuh
	Wall Total				1813(sqft)		5954 Btuh

Doors	Type	Storm	Ueff.	Area X	HTM=	Load
1	Insulated - Exterior,	n	(0.400)	8	14.8	118 Btuh
2	Insulated - Exterior,	n	(0.400)	24	14.8	355 Btuh
3	Insulated - Exterior,	n	(0.400)	24	14.8	355 Btuh
4	Insulated - Garage,	n	(0.400)	24	14.8	355 Btuh
5	Insulated - Exterior,	n	(0.400)	8	14.8	118 Btuh
	Door Total			88(sqft)		1302Btuh

Ceilings	Type/Color/Surface	Ueff.	R-Value	Area X	HTM=	Load
1	Vented Attic/D/Shing	(0.032)	30.0/0.0	2544	1.2	2998 Btuh
2	Knee Wall/D/Shing	(0.032)	30.0/0.0	50	1.2	59 Btuh
	Ceiling Total			2594(sqft)		3057Btuh

Floors	Type	Ueff.	R-Value	Size X	HTM=	Load
1	Slab On Grade	(1.180)	0.0	256.0 ft(perim.)	43.7	11177 Btuh
	Floor Total			2544 sqft		11177 Btuh

	Envelope Subtotal:	28805 Btuh

Infiltration	Type	ACH	Volume(cuft)	Wall Ratio	CFM=	
	Natural	0.50	25440	1.00	212.0	8587 Btuh

Duct load	Average sealed, R6.0, Supply(Att), Return(Att) (DLM of 0.155)	5780 Btuh

Manual J Winter Calculations

Residential Load - Component Details (continued)

Brian & Melinda Sganga

, FL

Project Title:
1005027SgangaRes
Building Type: User

5/13/2010

All Zones	**Sensible Subtotal All Zones**	**43172 Btuh**

WHOLE HOUSE TOTALS

Totals for Heating	Subtotal Sensible Heat Loss Ventilation Sensible Heat Loss Total Heat Loss	43172 Btuh 0 Btuh 43172 Btuh

EQUIPMENT

1. Electric Heat Pump	#	57000 Btuh

Key: Window types - NFRC (Requires U-Factor and Shading coefficient(SHGC) of glass as numerical values)
or - Glass as 'Clear' or 'Tint' (Uses U-Factor and SHGC defaults)
U - (Window U-Factor)
HTM - (ManualJ Heat Transfer Multiplier)

Version 8

System Sizing Calculations - Summer

Residential Load - Whole House Component Details

Brian & Melinda Sganga

Project Title:
1005027SgangaRes

, FL

5/13/2010

Reference City: Gainesville, FL Temperature Difference: 17.0F(MJ8 99%) Humidity difference: 54gr.
This calculation is for Worst Case. The house has been rotated 270 degrees.

Component Loads for Whole House

Window	Type* Panes	SHGC	U	InSh	IS	Ornt	Overhang Len	Hgt	Window Area(sqft) Gross	Shaded	Unshaded	HTM Shaded	Unshaded	Load
1	2 NFRC	0.30,	0.30	No	No	W	1.5ft	2.0ft	35.0	0.0	35.0	11	34	1191 Btuh
2	2 NFRC	0.30,	0.30	No	No	W	1.5ft	2.0ft	70.0	0.0	70.0	11	34	2382 Btuh
3	2 NFRC	0.30,	0.30	No	No	N	1.5ft	6.0ft	84.0	0.0	84.0	11	11	958 Btuh
4	2 NFRC	0.30,	0.30	No	No	N	1.5ft	6.0ft	8.0	0.0	8.0	11	11	91 Btuh
5	2 NFRC	0.30,	0.30	No	No	E	1.5ft	2.0ft	105.0	0.0	105.0	11	34	3572 Btuh
6	2 NFRC	0.30,	0.30	No	No	E	7.5ft	2.0ft	126.0	76.0	50.0	11	34	2567 Btuh
7	2 NFRC	0.30,	0.30	No	No	E	7.5ft	2.0ft	16.0	8.4	7.6	11	34	353 Btuh
8	2 NFRC	0.30,	0.30	No	No	S	1.5ft	6.0ft	35.0	12.6	22.4	11	14	452 Btuh
9	2 NFRC	0.30,	0.30	No	No	S	1.5ft	6.0ft	20.0	20.0	0.0	11	14	228 Btuh
10	2 NFRC	0.30,	0.30	No	No	N	31.5f	2.0ft	16.0	0.0	16.0	11	11	183 Btuh
11	2 NFRC	0.30,	0.30	No	No	W	9.5ft	2.0ft	144.0	105.9	38.1	11	34	2504 Btuh
	Excursion													1851 Btuh
	Window Total								659 (sqft)					16333 Btuh

Walls	Type	U-Value	R-Value Cav/Sheath	Area(sqft)	HTM	Load
1	Frame - Wood - Ext	0.09	13.0/0.0	543.0	2.1	1133 Btuh
2	Frame - Wood - Ext	0.09	13.0/0.0	324.0	2.1	676 Btuh
3	Frame - Wood - Ext	0.09	13.0/0.0	353.0	2.1	736 Btuh
4	Frame - Wood - Ext	0.09	13.0/0.0	377.0	2.1	786 Btuh
5	Frame - Wood - Adj	0.09	13.0/0.0	216.0	1.5	326 Btuh
	Wall Total			1813 (sqft)		3657 Btuh

Doors	Type	Area (sqft)	HTM	Load
1	Insulated - Exterior	8.0	11.2	90 Btuh
2	Insulated - Exterior	24.0	11.2	269 Btuh
3	Insulated - Exterior	24.0	11.2	269 Btuh
4	Insulated - Garage	24.0	11.2	269 Btuh
5	Insulated - Exterior	8.0	11.2	90 Btuh
	Door Total	88 (sqft)		986 Btuh

Ceilings	Type/Color/Surface	U-Value	R-Value	Area(sqft)	HTM	Load
1	Vented Attic/DarkShingle	0.032	30.0/0.0	2544.0	1.66	4213 Btuh
2	Knee Wall/DarkShingle	0.032	30.0/0.0	50.0	1.66	83 Btuh
	Ceiling Total			2594 (sqft)		4296 Btuh

Floors	Type	R-Value	Size	HTM	Load
1	Slab On Grade	0.0	2544 (ft-perimeter)	0.0	0 Btuh
	Floor Total		2544.0 (sqft)		0 Btuh

	Envelope Subtotal:	25271 Btuh

Manual J Summer Calculations

Residential Load - Component Details (continued)

Brian & Melinda Sganga

Project Title: 1005027SgangaRes

Climate:FL_GAINESVILLE_REGIONAL_A

, FL

5/13/2010

WHOLE HOUSE TOTALS

	Sensible Envelope Load All Zones	**32208 Btuh**
	Sensible Duct Load	7195 Btuh
	Total Sensible Zone Loads	**39403 Btuh**
	Sensible ventilation	0 Btuh
	Blower	0 Btuh
Whole House	**Total sensible gain**	**39403 Btuh**
Totals for Cooling	Latent infiltration gain (for 54 gr. humidity difference)	6198 Btuh
	Latent ventilation gain	0 Btuh
	Latent duct gain	1494 Btuh
	Latent occupant gain (6 people @ 200 Btuh per person)	1200 Btuh
	Latent other gain	0 Btuh
	Latent total gain	**8893 Btuh**
	TOTAL GAIN	**48295 Btuh**

EQUIPMENT

1. Central Unit	#	57000 Btuh

*Key: Window types (Panes - Number and type of panes of glass)
(SHGC - Shading coefficient of glass as SHGC numerical value)
(U - Window U-Factor)
(InSh - Interior shading device: none(No), Blinds(B), Draperies(D) or Roller Shades(R))
- For Blinds: Assume medium color, half closed
For Draperies: Assume medium weave, half closed
For Roller shades: Assume translucent, half closed
(IS - Insect screen: none(N), Full(F) or Half(½))
(Ornt - compass orientation)

Version 8

Notice of Treatment Add to

Applicator: Florida Pest Control & Chemical Co. (www.flapest .com)
Address: 536 SE Baya Ave
City Lake City Phone 752-1703

Site Location: Subdivision Gabbs Plumb level Coast
Lot # 6 Block# Permit # 28623
Address 497 NW Gabbs Gln. L.C.

Product used	Active Ingredient	% Concentration
☑ Premise	Imidacloprid	0.1%
☐ Termidor	Fipronil	0.12%
☐ Bora-Care	Disodium Octaborate Tetrahydrate	23.0%

Type treatment: ☑ Soil ☐ Wood

Area Treated	Square feet	Linear feet	Gallons Applied
Pet Garage	960	128	73.60

As per Florida Building Code 104.2.6 – If soil chemical barrier method for termite prevention is used, final exterior treatment shall be completed prior to final building approval.

If this notice is for the final exterior treatment, initial this line _____.

6-22-10 Date 5:25 Time 5299 Print Technician's Name

Remarks: _____

Applicator - White Permit File - Canary Permit Holder - Pink

10/05 ©

Not

Applicator: Florida Pest Co
Address: 536 SE Baya
City Lake City Fl

Site Location: Subdivision
Lot # 6 Block#
Address 497 NW Gab

Product used	
☑ Premise	
☐ Termidor	
☐ Bora-Care	Disodi

Type treatment: ☑

Area Treated	Squ
Dwl	3

As per Florida Building Cod
termite prevention is used, fi
to final building approval.

If this notice is for the final e

6-8-10 Date 14

Remarks: _____

Applicator - White Pe