第 73

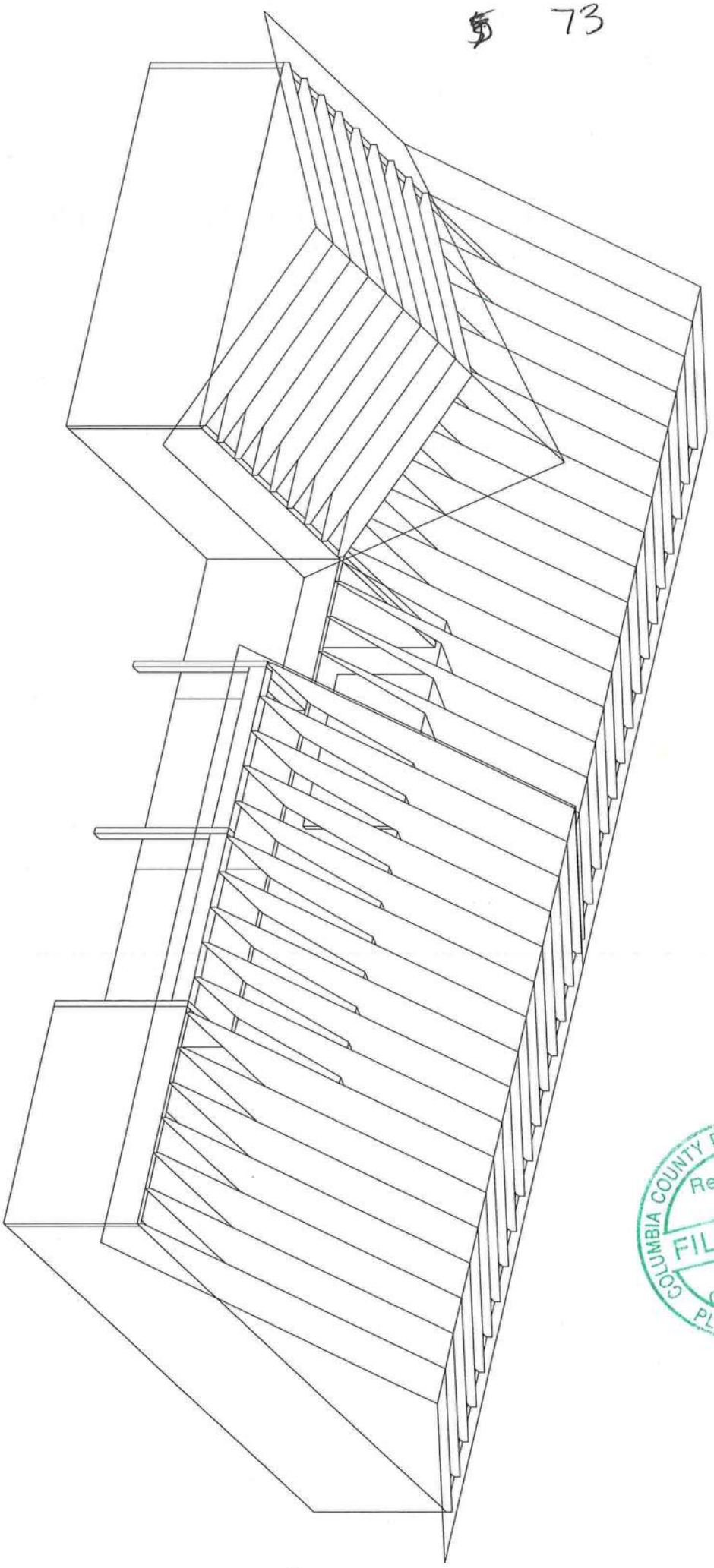

COLUMBIA COUNTY BUILDING DEPARTMENT
Received for
FILE COPY
Code Compliance
PLANS EXAMINER

Will Robinson Residence

Lake City, FL

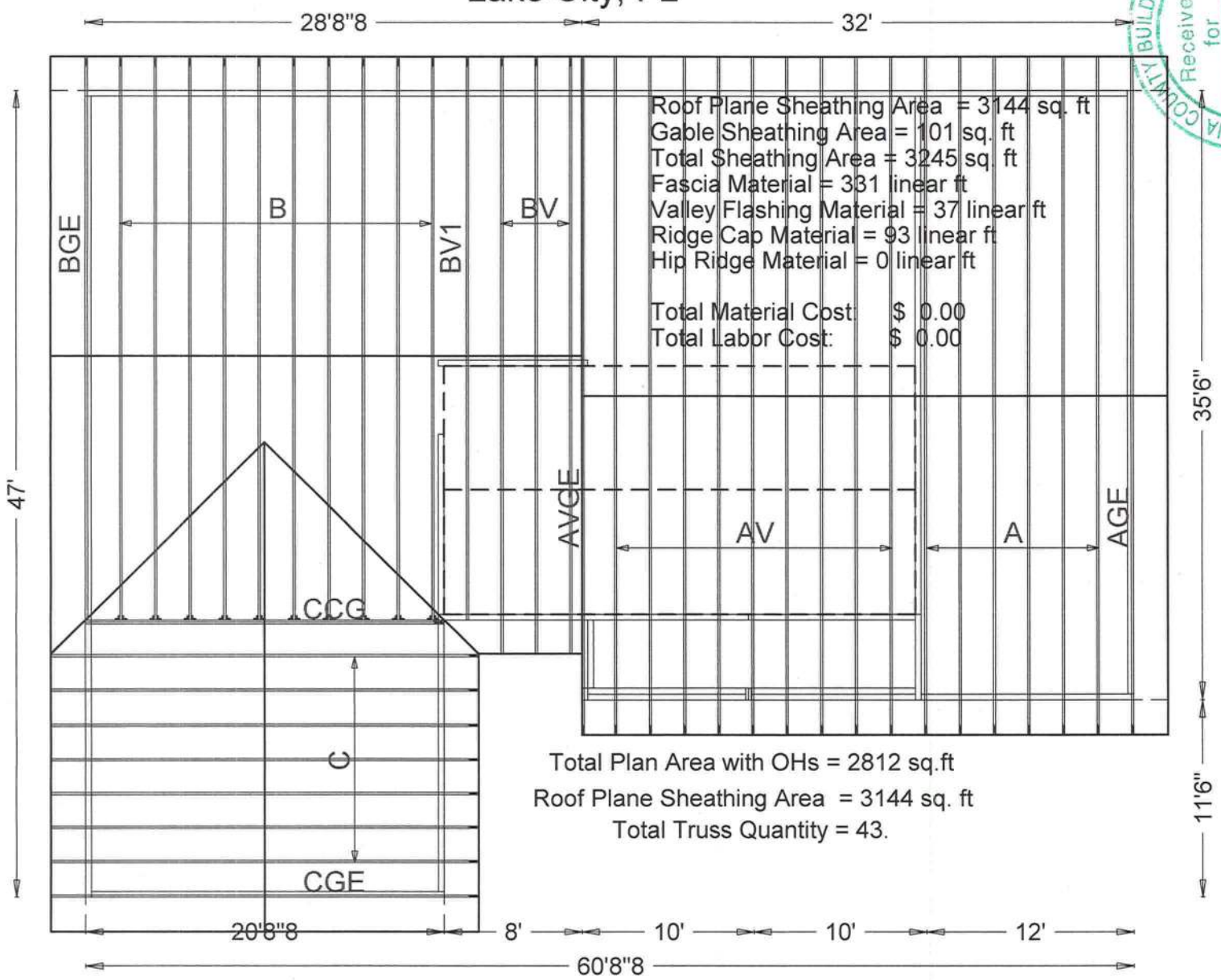

Roof Plane Sheathing Area = 3144 sq. ft
Gable Sheathing Area = 101 sq. ft
Total Sheathing Area = 3245 sq. ft
Fascia Material = 331 linear ft
Valley Flashing Material = 37 linear ft
Ridge Cap Material = 93 linear ft
Hip Ridge Material = 0 linear ft

Total Material Cost: $ 0.00
Total Labor Cost: $ 0.00

Total Plan Area with OHs = 2812 sq.ft
Roof Plane Sheathing Area = 3144 sq. ft
Total Truss Quantity = 43.

COLUMBIA COUNTY BUILDING DEPARTMENT
Received for Code Compliance
FILE COPY
PLANS EXAMINER

ANDERSON TRUSS COMPANY

Location:
JOB DESCRIPTION:: Fill in later
/: Will Robinson Residence

JOB NO:
12-175

PAGE NO:
1 OF 1

ITW Building Components Group, Inc.

1950 Marley Drive Haines City, FL 33844
Florida Engineering Certificate of Authorization Number: 0 278
Florida Certificate of Product Approval # FL1999
 Document ID:1UQS9114Z0431074932

WALTER P. FINN LICENSE No. 22839 STATE OF FLORIDA PROFESSIONAL ENGINEER
10/31/2012

Truss Fabricator:	Anderson Truss Company
Job Identification:	12-175--Fill in later Will Robinson Residence -- Lake City, FL
Truss Count:	12
Model Code:	Florida Building Code 2010
Truss Criteria:	FBC2010Res/TPI-2007(STD)
Engineering Software:	Alpine Software,Version 10.03.
Structural Engineer of Record:	The identity of the structural EOR did not exist as of
Address:	the seal date per section 61G15-31.003(5a) of the FAC
Minimum Design Loads:	Roof - 40.0 PSF @ 1.25 Duration
	Floor - N/A
	Wind - 120 MPH ASCE 7-10 -Closed

Notes:

1. Determination as to the suitability of these truss components for the structure is the responsibility of the building designer/engineer of record, as defined in ANSI/TPI 1
2. The drawing date shown on this index sheet must match the date shown on the individual truss component drawing.
3. As shown on attached drawings; the drawing number is preceded by: HCUSR9114

Walter P. Finn
-Truss Design Engineer-

1950 Marley Drive
Haines City, FL 33844

Details: BRCLBSUB-12015EC1-GBLLETIN-GABRST10-CNNAILSP-

#	Ref Description	Drawing#	Date
1	71708--B 30'10" Common	12304011	10/30/12
2	71709-BGE 30'10" Commo	12305010	10/31/12
3	71710--C 20'8"8 Common	12304012	10/30/12
4	71711-CGE 20'8"8 Gable	12305006	10/31/12
5	71712--A 35'6" Common	12305001	10/31/12
6	71713-AGE 35'6" Common	12305007	10/31/12
7	71714-A 35'6" Common G	12305002	10/31/12
8	71715-BV 30'10" Common	12305003	10/31/12
9	71716-BV1 30'10" Commo	12305004	10/31/12
10	71717--AV 35'6" Common	12305005	10/31/12
11	71718-AVGE 35'6" Gable	12305008	10/31/12
12	71719-CCG 20'8"8 Commo	12305009	10/31/12

COLUMBIA COUNTY BUILDING DEPARTMENT
Received for FILE COPY
Code Compliance
PLANS EXAMINER

THIS DWG PREPARED FROM COMPUTER INPUT (LOADS & DIMENSIONS) SUBMITTED BY TRUSS MFR.

(12-175--Fill in later Will Robinson Residence -- Lake City, FL - B 30'10" Common)

Top chord 2x4 SP M-30
Bot chord 2x4 SP #1
Webs 2x4 SP #3

120 mph wind, 15.00 ft mean hgt, ASCE 7-10, CLOSED bldg, Located anywhere in roof, RISK CAT II, EXP B, wind TC DL=5.0 psf, wind BC DL=5.0 psf. GCpi(+/-)=0.18

H = recommended connection based on manufacturer tested capacities and calculations. Conditions may exist that require different connections than indicated. Refer to manufacturer publication for additional information.

(H1) = (J) Hanger not calculated (2)2x6 SP SS supporting member.

Truss passed check for 20 psf additional bottom chord live load in areas with 42"-high x 24"-wide clearance.

This design is based on lumber values in effect prior to June 1, 2012 and shall only be used on projects designed and permitted prior to this date unless specifically approved in writing by the building authority having jurisdiction, the building designer and the project owner.

Wind loads and reactions based on MWFRS with additional C&C member design.

Hanger specified assumes connection to supporting chord is located a minimum of five times the depth of the supporting chord from any unsupported end, unless unsupported chord end has 85% plating coverage.

(a) Continuous lateral bracing equally spaced on member.

Bottom chord checked for 10.00 psf non-concurrent live load.

Deflection meets L/240 live and L/180 total load. Creep increase factor for dead load is 1.50.

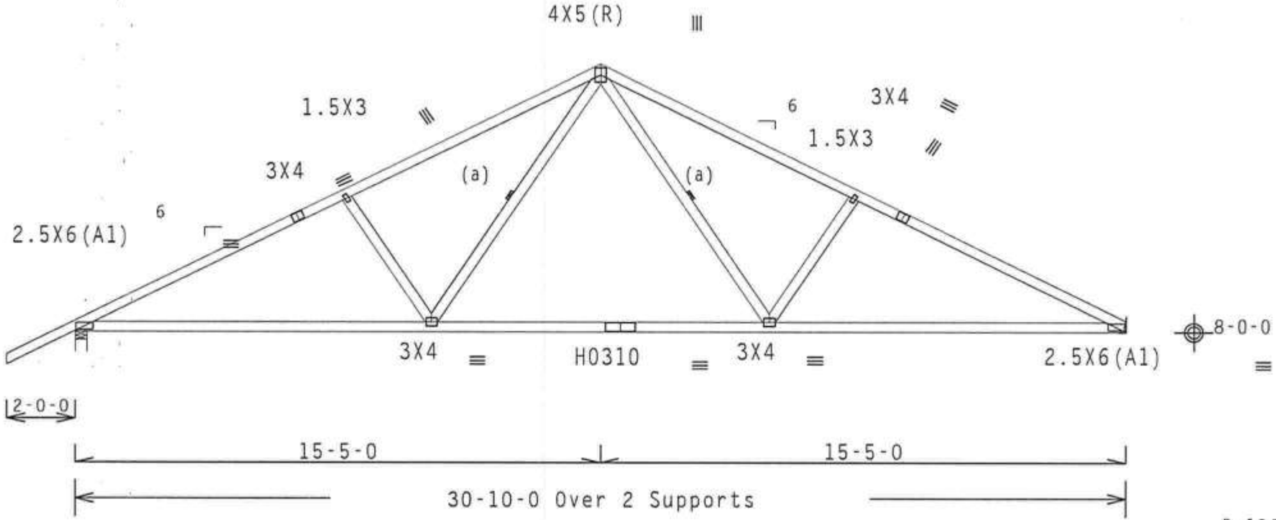

R=1362 U=0 H=Simpson LUS26

Supported Member Face: (4)

Supporting Member Face: (4)

Supporting Member : (2) 2x6 SP #2

R=1506 U=0 W=4"

RL=125/-132

Design Crit: FBC2010Res/TPI-2007(STD) FT/RT=10%(0%)/0(0) 10.03.[illegible] QTY 10 FL/-/4/-/-/R/-

PLT TYP. 20 Gauge HS,Wave

Scale =.1875"/Ft.

WARNING READ AND FOLLOW ALL NOTES ON THIS SHEET!
IMPORTANT FURNISH THIS DESIGN TO ALL CONTRACTORS INCLUDING INSTALLERS.

Trusses require extreme care in fabricating, handling, shipping, installing and bracing. [illegible] and follow the latest edition of BCSI (Building Component Safety Information, by TPI and WTCA) f[illegible] safety practices prior to performing these functions. Installers shall provide temporary bracing pe[illegible] BCSI. Unless noted otherwise, top chord shall have properly attached structural sheathing and botto[illegible] chord shall have a properly attached rigid ceiling. Locations shown for permanent lateral restrain[illegible] shall have bracing installed per BCSI sections B3, B7 or B10, as applicable.

ITW Building Components Group Inc. (ITWBCG) shall not be responsible for any deviation from th[illegible] any failure to build the truss in conformance with ANSI/TPI 1, or for handling, shipping, install[illegible] bracing of trusses. Apply plates to each face of truss and position as shown above and on the Joi[illegible] Details, unless noted otherwise. Refer to drawings 160A-Z for standard plate positions. A seal on [illegible] drawing or cover page listing this drawing, indicates acceptance of professional engineering responsibility solely for the design shown. The suitability and use of this design for any structure is the responsibility of the Building Designer per ANSI/TPI 1 Sec.2. For more information see: This job's general notes page; ITW-BCG: www.itwbcg.com; TPI: www.tpinst.org; WTCA: www.sbcindustry.com; ICC: www.iccsafe.org

ALPINE
Building Components Group Inc.
Haines City, FL 33844
FL COA #0 278

WALTER P. FINN
LICENSE
No. 22839
STATE OF
FLORIDA
PROFESSIONAL ENGINEER
10/31/2012

TC LL	20.0 PSF
TC DL	10.0 PSF
BC DL	10.0 PSF
BC LL	0.0 PSF
TOT.LD.	40.0 PSF
DUR.FAC.	1.25
SPACING	24.0"

REF	R9114- 71708
DATE	10/30/12
DRW	HCUSR9114 12304011
HC-ENG	JB/WPF
SEQN-	287396
JREF-	1UQS9114Z04

THIS DWG PREPARED FROM COMPUTER INPUT (LOADS & DIMENSIONS) SUBMITTED BY TRUSS MFR.

(12-175--Fill in later Will Robinson Residence -- Lake City, FL - BGE 30'10" Common)

Top chord 2x4 SP M-30
Bot chord 2x4 SP M-30
Webs 2x4 SP #3
:Stack Chord SC1 2x4 SP M-30::Stack Chord SC2 2x4 SP M-30:

120 mph wind, 15.00 ft mean hgt, ASCE 7-10, CLOSED bldg, Located anywhere in roof, RISK CAT II, EXP B, wind TC DL=5.0 psf, wind BC DL=5.0 psf. GCpi(+/-)=0.18

Gable end supports 8" max rake overhang.

Stacked top chord must NOT be notched or cut in area (NNL). Dropped top chord braced at 24" o.c. intervals. Attach stacked top chord (SC) to dropped top chord in notchable area using 3x4 tie-plates 24" o.c. Center plate on stacked/dropped chord interface, plate length perpendicular to chord length. Splice top chord in notchable area using 3x6.

This design is based on lumber values in effect prior to June 1, 2012 and shall only be used on projects designed and permitted prior to this date unless specifically approved in writing by the building authority having jurisdiction, the building designer and the project owner.

Wind loads and reactions based on MWFRS with additional C&C member design.

See DWGS A12015ENC100212, GBLLETIN0212, & GABRST100212 for more requirements.

In lieu of structural panels use purlins to brace TC @ 24" OC.

Bottom chord checked for 10.00 psf non-concurrent live load.

Deflection meets L/240 live and L/180 total load. Creep increase factor for dead load is 1.50.

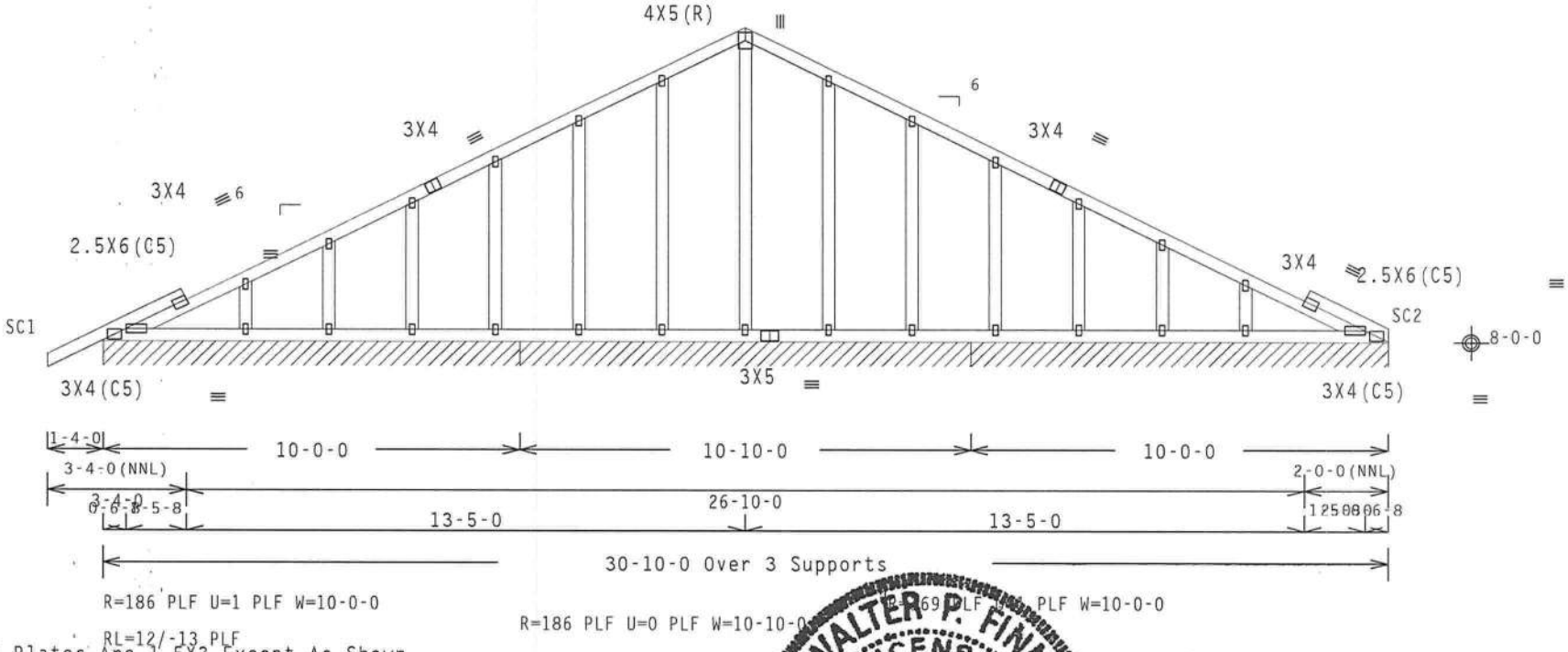

Note: All Plates Are 1.5X3 Except As Shown.

Design Crit: FBC2010Res/TPI-2007(STD) 10.03.11.0209.20 QTY: 1 FL/-/4/-/-/R/- Scale =.25"/Ft.

PLT TYP. Wave FT/RT=10%(0%)/0(0)

ALPINE
Building Components Group Inc.
Haines City, FL 33844
FL COA #0 278

WARNING READ AND FOLLOW ALL NOTES ON THIS SHEET!
IMPORTANT FURNISH THIS DESIGN TO ALL CONTRACTORS INCLUDING INSTALLERS.

Trusses require extreme care in fabricating, handling, shipping, installing and bracing. Refer to and follow the latest edition of BCSI (Building Component Safety Information, by TPI and WTCA) for safety practices prior to performing these functions. Installers shall provide temporary bracing per BCSI. Unless noted otherwise, top chord shall have properly attached structural sheathing and bottom chord shall have a properly attached rigid ceiling. Locations shown for permanent lateral restraint of webs shall have bracing installed per BCSI sections B3, B7 or B10, as applicable.

ITW Building Components Group Inc. (ITWBCG) shall not be responsible for any deviation from this design, any failure to build the truss in conformance with ANSI/TPI 1, or for handling, shipping, installing and bracing of trusses. Apply plates to each face of truss and position as shown above and on the Joint Details, unless noted otherwise. Refer to drawings 160A-Z for standard plate positions. A seal on this drawing or cover page listing this drawing, indicates acceptance of professional engineering responsibility solely for the design shown. The suitability and use of this design for any structure is the responsibility of the Building Designer per ANSI/TPI 1 Sec.2. For more information see: This job's general notes page; ITW-BCG: www.itwbcg.com; TPI: www.tpinst.org; WTCA: www.sbcindustry.com; ICC: www.iccsafe.org

WALTER P. FINN LICENSE No.22839 STATE OF FLORIDA PROFESSIONAL ENGINEER

10/31/2012

TC LL	20.0 PSF	REF R9114- 71709
TC DL	10.0 PSF	DATE 10/31/12
BC DL	10.0 PSF	DRW HCUSR9114 12305010
BC LL	0.0 PSF	HC-ENG JB/WPF
TOT.LD.	40.0 PSF	SEQN- 285707
DUR.FAC.	1.25	
SPACING	24.0"	JREF- 1UQS9114Z04

THIS DWG PREPARED FROM COMPUTER INPUT (LOADS & DIMENSIONS) SUBMITTED BY TRUSS MFR.

(12-175--Fill in later Will Robinson Residence -- Lake City, FL - C 20'8"8 Common)

Top chord 2x4 SP M-30
Bot chord 2x4 SP M-30
Webs 2x4 SP #3

120 mph wind, 15.00 ft mean hgt, ASCE 7-10, CLOSED bldg, Located anywhere in roof, RISK CAT II, EXP B, wind TC DL=5.0 psf, wind BC DL=5.0 psf. GCpi(+/-)=0.18

Bottom chord checked for 10.00 psf non-concurrent live load.

This design is based on lumber values in effect prior to June 1, 2012 and shall only be used on projects designed and permitted prior to this date unless specifically approved in writing by the building authority having jurisdiction, the building designer and the project owner.

Wind loads and reactions based on MWFRS with additional C&C member design.

Deflection meets L/240 live and L/180 total load. Creep increase factor for dead load is 1.50.

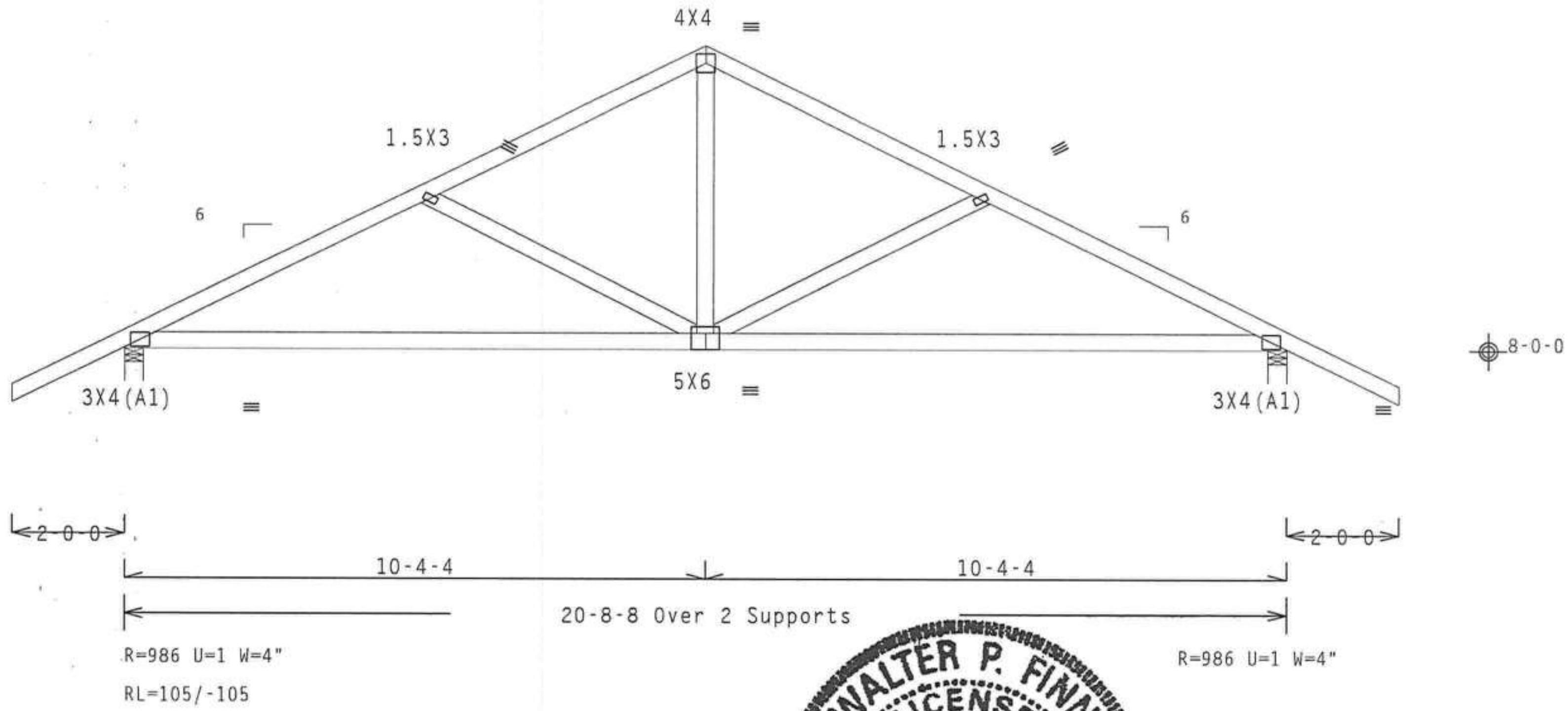

Design Crit: FBC2010Res/TPI-2007(STD
FT/RT=10%(0%)/0(0) 10.03.11.0800.20 QTY:7 FL/-/4/-/-/R/- Scale =.3125"/Ft.

PLT TYP. Wave

ALPINE
Building Components Group Inc.
Haines City, FL 33844
FL COA #0 278

WARNING READ AND FOLLOW ALL NOTES ON THIS SHEET!
IMPORTANT FURNISH THIS DESIGN TO ALL CONTRACTORS INCLUDING INSTALLERS.

Trusses require extreme care in fabricating, handling, shipping, installing and bracing. Refer to and follow the latest edition of BCSI (Building Component Safety Information, by TPI and WTCA) for safety practices prior to performing these functions. Installers shall provide temporary bracing per BCSI. Unless noted otherwise, top chord shall have properly attached structural sheathing and bottom chord shall have a properly attached rigid ceiling. Locations shown for permanent lateral restraint of webs shall have bracing installed per BCSI sections B3, B7 or B10, as applicable.

ITW Building Components Group Inc. (ITWBCG) shall not be responsible for any deviation from this design, any failure to build the truss in conformance with ANSI/TPI 1, or for handling, shipping, installation & bracing of trusses. Apply plates to each face of truss and position as shown above and on the Joint Details, unless noted otherwise. Refer to drawings 160A-Z for standard plate positions. A seal on this drawing or cover page listing this drawing, indicates acceptance of professional engineering responsibility solely for the design shown. The suitability and use of this design for any structure is the responsibility of the Building Designer per ANSI/TPI 1 Sec.2. For more information see: This job's general notes page; ITW-BCG: www.itwbcg.com; TPI: www.tpinst.org; WTCA: www.sbcindustry.com; ICC: www.iccsafe.org

WALTER P. FINN
LICENSE
No. 22839
STATE OF FLORIDA
PROFESSIONAL ENGINEER
10/31/2012

TC LL	20.0 PSF	REF	R9114- 71710
TC DL	10.0 PSF	DATE	10/30/12
BC DL	10.0 PSF	DRW	HCUSR9114 12304012
BC LL	0.0 PSF	HC-ENG	JB/WPF
TOT.LD.	40.0 PSF	SEQN-	287222
DUR.FAC.	1.25		
SPACING	24.0"	JREF-	1UQS9114Z04

THIS DWG PREPARED FROM COMPUTER INPUT (LOADS & DIMENSIONS) SUBMITTED BY TRUSS MFR.

(12-175--Fill in later Will Robinson Residence -- Lake City, FL - CGE 20'8"8 Gable)

Top chord 2x4 SP M-30
Bot chord 2x4 SP M-30
Webs 2x4 SP #3
:Stack Chord SC1 2x4 SP M-30::Stack Chord SC2 2x4 SP M-30:

120 mph wind, 15.00 ft mean hgt, ASCE 7-10, CLOSED bldg, Located anywhere in roof, RISK CAT II, EXP B, wind TC DL=5.0 psf, wind BC DL=5.0 psf. GCpi(+/-)=0.18

Gable end supports 8" max rake overhang.

Stacked top chord must NOT be notched or cut in area (NNL). Dropped top chord braced at 24" o.c. intervals. Attach stacked top chord (SC) to dropped top chord in notchable area using 3x4 tie-plates 24" o.c. Center plate on stacked/dropped chord interface, plate length perpendicular to chord length. Splice top chord in notchable area using 3x6.

This design is based on lumber values in effect prior to June 1, 2012 and shall only be used on projects designed and permitted prior to this date unless specifically approved in writing by the building authority having jurisdiction, the building designer and the project owner.

Wind loads and reactions based on MWFRS with additional C&C member design.

See DWGS A12015ENC100212, GBLLETIN0212, & GABRST100212 for more requirements.

In lieu of structural panels use purlins to brace TC @ 24" OC.

Bottom chord checked for 10.00 psf non-concurrent live load.

Deflection meets L/240 live and L/180 total load. Creep increase factor for dead load is 1.50.

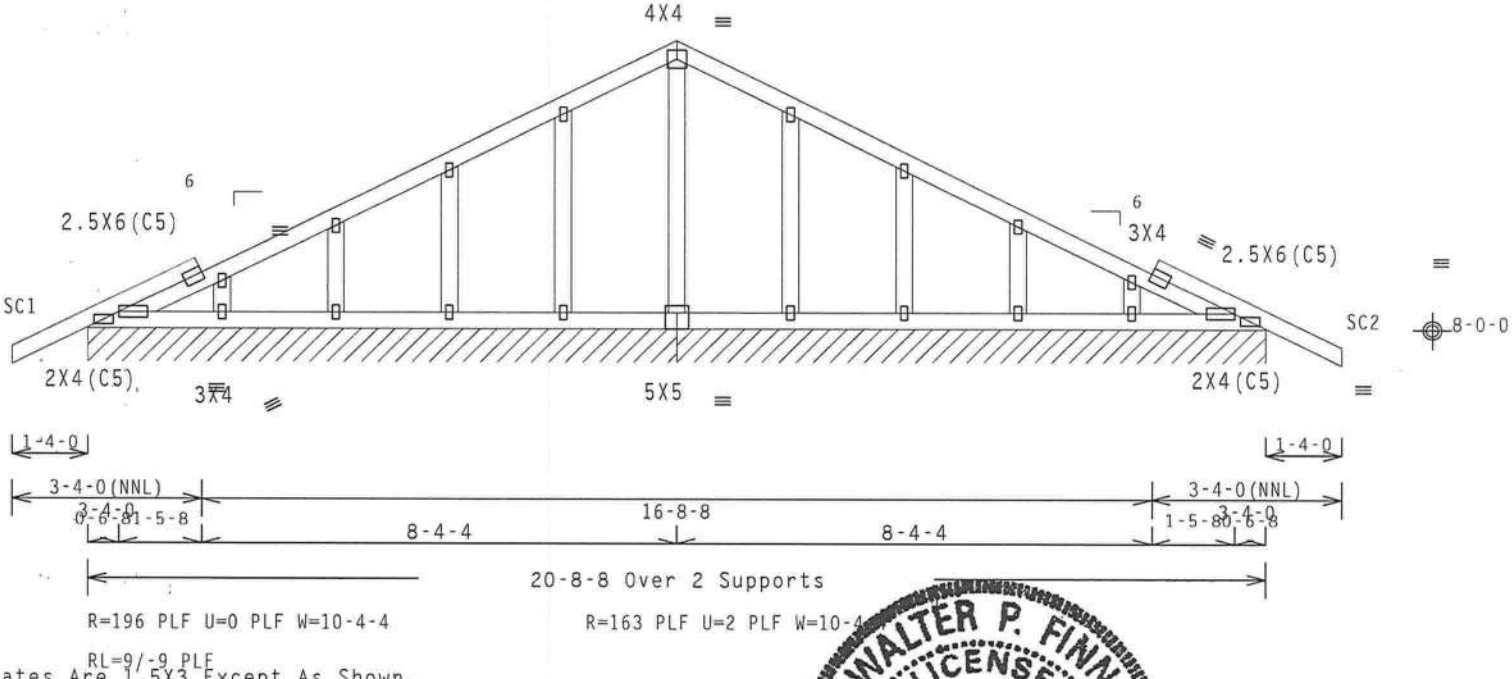

Note: All Plates Are 1.5X3 Except As Shown.

Design Crit: FBC2010Res/TPI-2007(STD)

PLT TYP. Wave FT/RT=10%(0%)/0(0) 10.03. QTY: FL/-/4/-/-/R/- Scale =.3125"/Ft.

ALPINE
Building Components Group Inc.
Haines City, FL 33844
FL COA #0 278

WARNING READ AND FOLLOW ALL NOTES ON THIS SHEET!
IMPORTANT FURNISH THIS DESIGN TO ALL CONTRACTORS INCLUDING INSTALLERS.

Trusses require extreme care in fabricating, handling, shipping, installing and bracing. Refer to and follow the latest edition of BCSI (Building Component Safety Information, by TPI and WTCA) for safety practices prior to performing these functions. Installers shall provide temporary bracing per BCSI. Unless noted otherwise, top chord shall have properly attached structural sheathing and bottom chord shall have a properly attached rigid ceiling. Locations shown for permanent lateral restraint of webs shall have bracing installed per BCSI sections B3, B7 or B10, as applicable.

ITW Building Components Group Inc. (ITWBCG) shall not be responsible for any deviation from this design, any failure to build the truss in conformance with ANSI/TPI 1, or for handling, shipping, installation and bracing of trusses. Apply plates to each face of truss and position as shown above and on the Joint Details, unless noted otherwise. Refer to drawings 160A-2 for standard plate positions. A seal on this drawing or cover page listing this drawing, indicates acceptance of professional engineering responsibility solely for the design shown. The suitability and use of this design for any structure is the responsibility of the Building Designer per ANSI/TPI 1 Sec.2. For more information see: This job's general notes page; ITW-BCG: www.itwbcg.com; TPI: www.tpinst.org; WTCA: www.sbcindustry.com; ICC: www.iccsafe.org

WALTER P. FINN LICENSE No.22839 STATE OF FLORIDA PROFESSIONAL ENGINEER

10/31/2012

TC LL	20.0 PSF	REF	R9114- 71711
TC DL	10.0 PSF	DATE	10/31/12
BC DL	10.0 PSF	DRW	HCUSR9114 12305006
BC LL	0.0 PSF	HC-ENG	JB/WPF
TOT.LD.	40.0 PSF	SEQN-	285711
DUR.FAC.	1.25		
SPACING	24.0"	JREF-	1UQS9114Z04

THIS DWG PREPARED FROM COMPUTER INPUT (LOADS & DIMENSIONS) SUBMITTED BY TRUSS MFR.

(12-175--Fill in later Will Robinson Residence -- Lake City, FL - A 35'6" Common)

Top chord 2x4 SP M-30
Bot chord 2x4 SP M-30
Webs 2x4 SP #3

120 mph wind, 15.00 ft mean hgt, ASCE 7-10, CLOSED bldg, Located anywhere in roof, RISK CAT II, EXP B, wind TC DL=5.0 psf, wind BC DL=5.0 psf. GCpi(+/-)=0.18

(a) Continuous lateral bracing equally spaced on member.

Bottom chord checked for 10.00 psf non-concurrent live load.

Deflection meets L/240 live and L/180 total load. Creep increase factor for dead load is 1.50.

This design is based on lumber values in effect prior to June 1, 2012 and shall only be used on projects designed and permitted prior to this date unless specifically approved in writing by the building authority having jurisdiction, the building designer and the project owner.

Wind loads and reactions based on MWFRS with additional C&C member design.

Truss passed check for 20 psf additional bottom chord live load in areas with 42"-high x 24"-wide clearance.

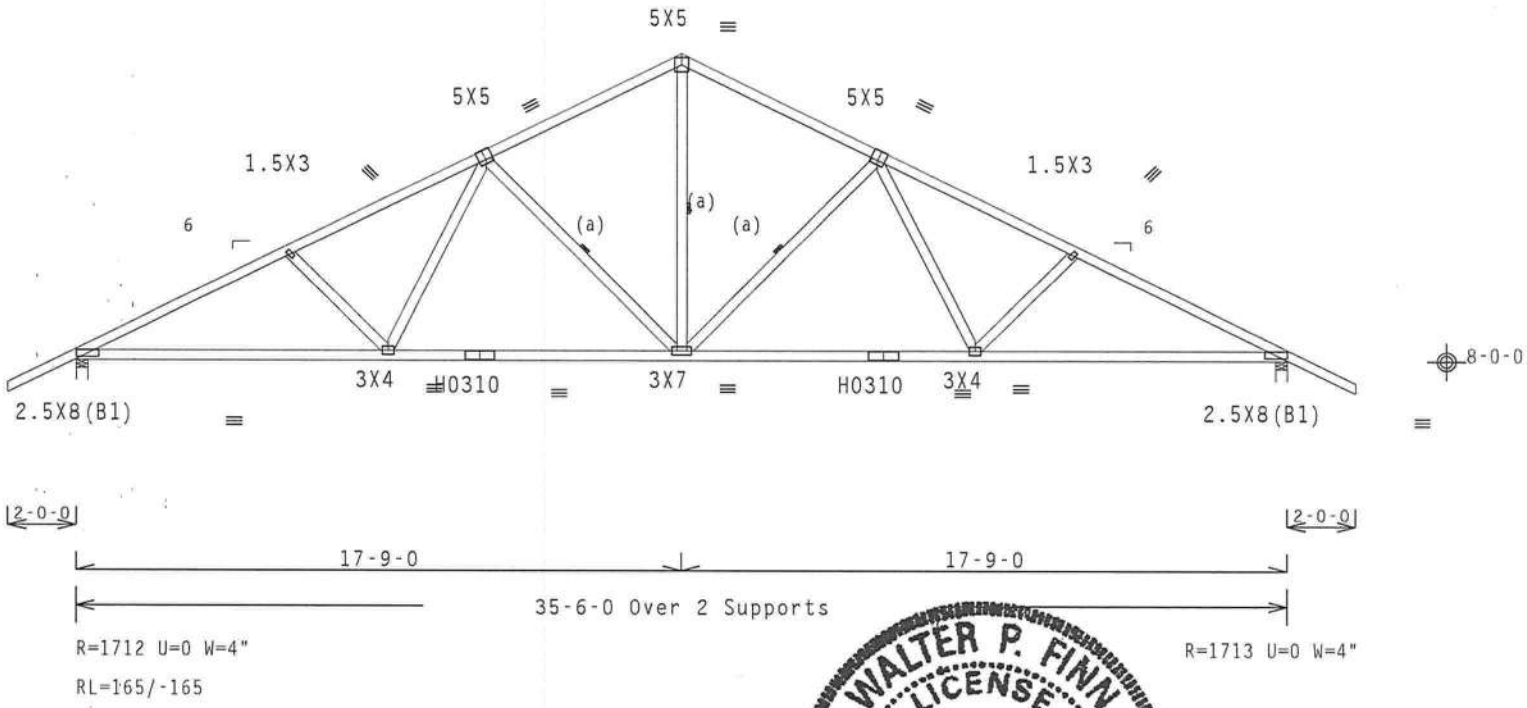

Design Crit: FBC2010Res/TPI-2007(STD)

PLT TYP. 20 Gauge HS,Wave FT/RT=10%(0%)/0(0) 10/03.1 QTY: FL/-/4/-/-/R/- Scale =.1875"/Ft.

ALPINE
Building Components Group Inc.
Haines City, FL 33844
FL COA #0 278

WARNING READ AND FOLLOW ALL NOTES ON THIS SHEET!
IMPORTANT FURNISH THIS DESIGN TO ALL CONTRACTORS INCLUDING INSTALLERS.

Trusses require extreme care in fabricating, handling, shipping, installing and bracing. Refer to and follow the latest edition of BCSI (Building Component Safety Information, by TPI and WTCA) for safety practices prior to performing these functions. Installers shall provide temporary bracing per BCSI. Unless noted otherwise, top chord shall have properly attached structural sheathing and bottom chord shall have a properly attached rigid ceiling. Locations shown for permanent lateral restraint of webs shall have bracing installed per BCSI sections B3, B7 or B10, as applicable.

ITW Building Components Group Inc. (ITWBCG) shall not be responsible for any deviation from this design, any failure to build the truss in conformance with ANSI/TPI 1, or for handling, shipping, installation and bracing of trusses. Apply plates to each face of truss and position as shown above and on the Joint Details, unless noted otherwise. Refer to drawings 160A-Z for standard plate positions. A seal on this drawing or cover page listing this drawing, indicates acceptance of professional engineering responsibility solely for the design shown. The suitability and use of this design for any structure is the responsibility of the Building Designer per ANSI/TPI 1 Sec.2. For more information see: This job's general notes page; ITW-BCG: www.itwbcg.com; TPI: www.tpinst.org; WTCA: www.sbcindustry.com; ICC: www.iccsafe.org

WALTER P. FINN LICENSE No.22839 STATE OF FLORIDA PROFESSIONAL ENGINEER

10/31/2012

TC LL	20.0 PSF	REF	R9114- 71712
TC DL	10.0 PSF	DATE	10/31/12
BC DL	10.0 PSF	DRW	HCUSR9114 12305001
BC LL	0.0 PSF	HC-ENG	JB/WPF
TOT.LD.	40.0 PSF	SEQN-	287270
DUR.FAC.	1.25		
SPACING	24.0"	JREF-	1UQS9114Z04

THIS DWG PREPARED FROM COMPUTER INPUT (LOADS & DIMENSIONS) SUBMITTED BY TRUSS MFR.

(12-175--Fill in later Will Robinson Residence -- Lake City, FL - AGE 35'6" Common)

Top chord 2x4 SP M-30
Bot chord 2x4 SP M-30
Webs 2x4 SP #3
:Stack Chord SC1 2x4 SP M-30::Stack Chord SC2 2x4 SP M-30:

120 mph wind, 15.00 ft mean hgt, ASCE 7-10, CLOSED bldg, Located anywhere in roof, RISK CAT II, EXP B, wind TC DL=5.0 psf, wind BC DL=5.0 psf, GCpi(+/-)=0.18

Gable end supports 8" max rake overhang.

Stacked top chord must NOT be notched or cut in area (NNL). Dropped top chord braced at 24" o.c. intervals. Attach stacked top chord (SC) to dropped top chord in notchable area using 3x4 tie-plates 24" o.c. Center plate on stacked/dropped chord interface, plate length perpendicular to chord length. Splice top chord in notchable area using 3x6.

Deflection meets L/240 live and L/180 total load. Creep increase factor for dead load is 1.50.

This design is based on lumber values in effect prior to June 1, 2012 and shall only be used on projects designed and permitted prior to this date unless specifically approved in writing by the building authority having jurisdiction, the building designer and the project owner.

Wind loads and reactions based on MWFRS with additional C&C member design.

See DWGS A12015ENC100212, GBLLETIN0212, & GABRST100212 for more requirements.

(a) 1x4 #3SRB SPF-S or better "L" brace. 80% length of web member. Attach with 8d Box or Gun (0.113"x2.5",min.)nails @ 6" OC.

In lieu of structural panels use purlins to brace TC @ 24" OC.

Bottom chord checked for 10.00 psf non-concurrent live load.

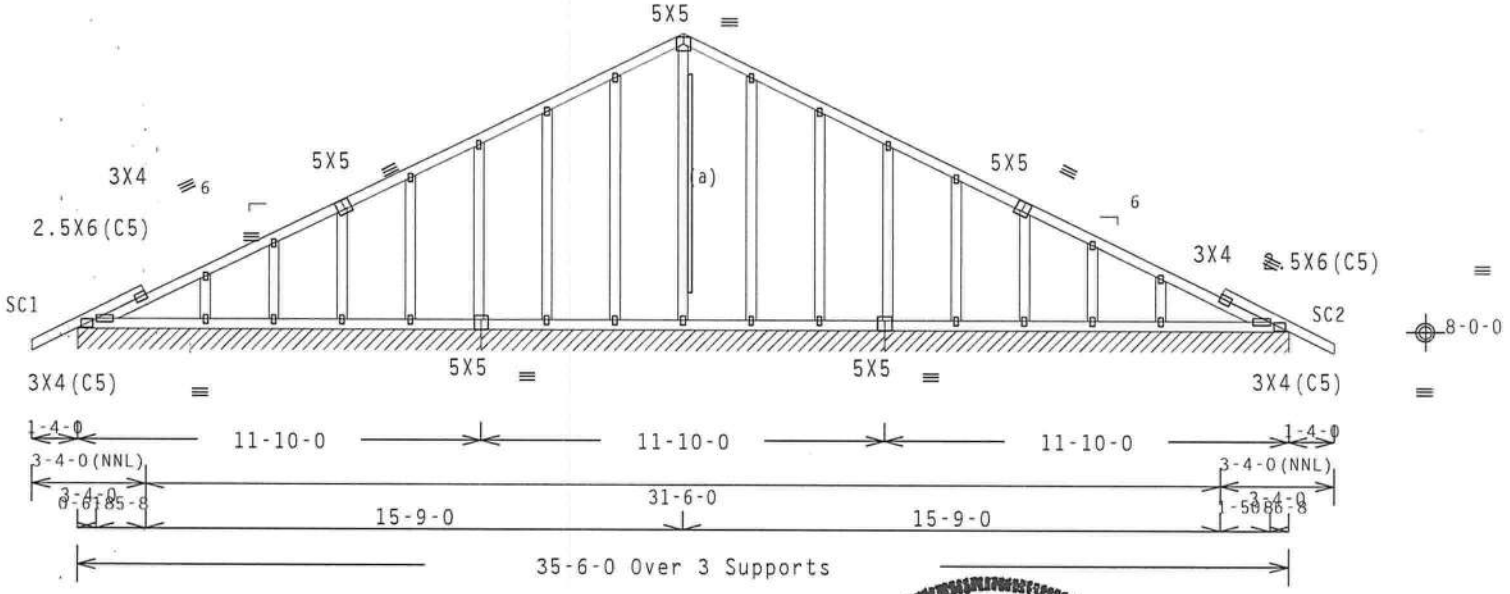

Note: All Plates Are 1.5X3 Except As Shown.

Design Crit: FBC2010Res/TPI-2007(STD)

PLT TYP. Wave FT/RT=10%(0%)/0(0) 10.03.11.0209.20 QTY 1 FL/-/4/-/-/R/- Scale =.1875"/Ft.

ALPINE
Building Components Group Inc.
Haines City, FL 33844
FL COA #0 278

WARNING READ AND FOLLOW ALL NOTES ON THIS SHEET!
IMPORTANT FURNISH THIS DESIGN TO ALL CONTRACTORS INCLUDING INSTALLERS.

Trusses require extreme care in fabricating, handling, shipping, installing and bracing. Refer to and follow the latest edition of BCSI (Building Component Safety Information, by TPI and WTCA) for recommended practices prior to performing these functions. Installers shall provide temporary bracing per BCSI. Unless noted otherwise, top chord shall have properly attached structural sheathing and bottom chord shall have a properly attached rigid ceiling. Locations shown for permanent lateral restraint of webs shall have bracing installed per BCSI sections B3, B7 or B10, as applicable.

ITW Building Components Group Inc. (ITWBCG) shall not be responsible for any deviation from this design, any failure to build the truss in conformance with ANSI/TPI 1, or for handling, shipping, installing and bracing of trusses. Apply plates to each face of truss and position as shown above and on the Joint Details, unless noted otherwise. Refer to drawings 160A-Z for standard plate positions. A seal on this drawing or cover page listing this drawing, indicates acceptance of professional engineering responsibility solely for the design shown. The suitability and use of this design for any structure is the responsibility of the Building Designer per ANSI/TPI 1 Sec.2. For more information see: This Job's general notes page; ITW-BCG: www.itwbcg.com; TPI: www.tpinst.org; WTCA: www.sbcindustry.com; ICC: www.iccsafe.org

WALTER F. FINN LICENSE No. 22839 STATE OF FLORIDA PROFESSIONAL ENGINEER
10/31/2012

TC LL	20.0 PSF	REF	R9114- 71713
TC DL	10.0 PSF	DATE	10/31/12
BC DL	10.0 PSF	DRW	HCUSR9114 12305007
BC LL	0.0 PSF	HC-ENG	JB/WPF
TOT.LD.	40.0 PSF	SEQN-	285695
DUR.FAC.	1.25		
SPACING	24.0"	JREF-	1UQS9114Z04

THIS DWG PREPARED FROM COMPUTER INPUT (LOADS & DIMENSIONS) SUBMITTED BY TRUSS MFR.

(12-175--Fill in later Will Robinson Residence -- Lake City, FL - A 35'6" Common Girder)

Top chord 2x4 SP M-30
Bot chord 2x4 SP M-30
Webs 2x4 SP #3

120 mph wind, 15.00 ft mean hgt, ASCE 7-10, CLOSED bldg, Located anywhere in roof, RISK CAT II, EXP B, wind TC DL=5.0 psf, wind BC DL=5.0 psf. GCpi(+/-)=0.18

(a) Continuous lateral bracing equally spaced on member.

Deflection meets L/240 live and L/180 total load. Creep increase factor for dead load is 1.50.

This design is based on lumber values in effect prior to June 1, 2012 and shall only be used on projects designed and permitted prior to this date unless specifically approved in writing by the building authority having jurisdiction, the building designer and the project owner.

Wind loads and reactions based on MWFRS with additional C&C member design.

Bottom chord checked for 10.00 psf non-concurrent live load.

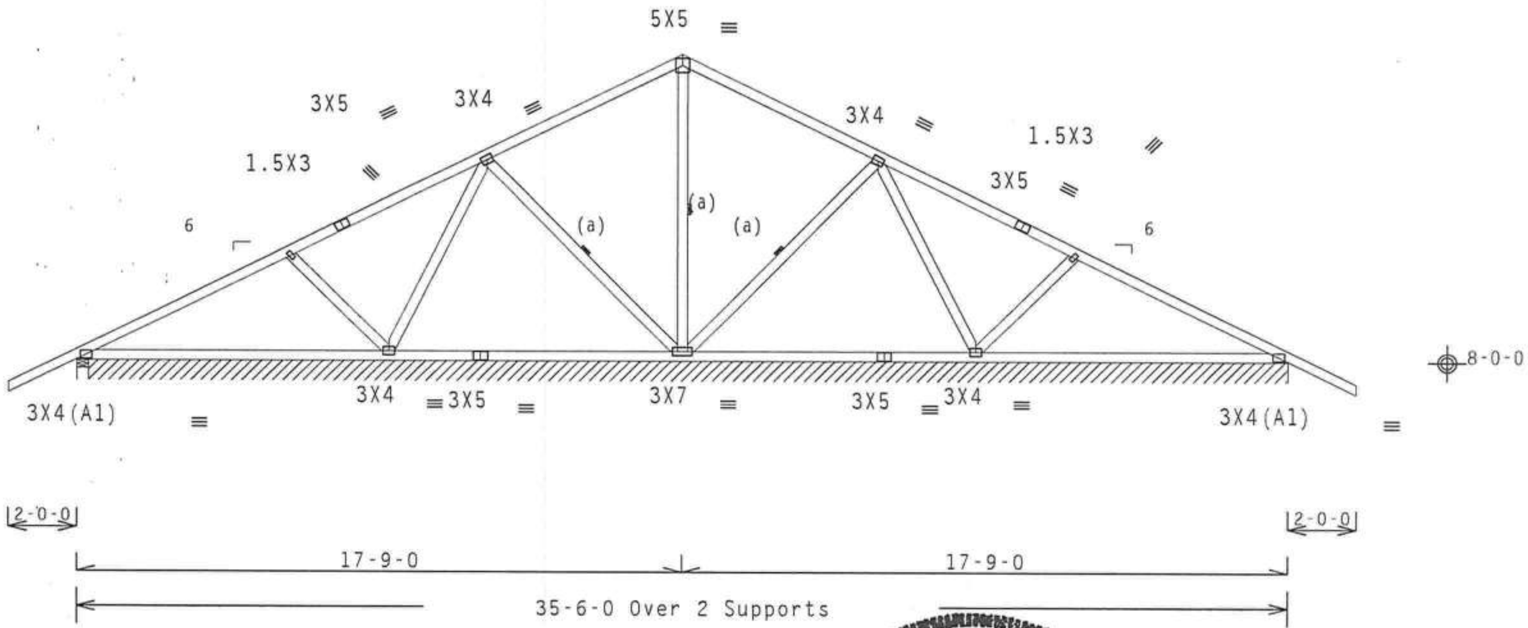

R=521 U=0 W=4"
R=76 PLF U=0 PLF W=35-2-0
RL=165/-165

Design Crit: FBC2010Res/TPI-2007(STD)
FT/RT=10%(0%)/0(0) 10.03.11.0800.20 QTY:1 FL/-/4/-/-/R/- Scale =.1875"/Ft.

PLT TYP. Wave

ALPINE
Building Components Group Inc.
Haines City, FL 33844
FL COA #0 278

WARNING READ AND FOLLOW ALL NOTES ON THIS SHEET!
IMPORTANT FURNISH THIS DESIGN TO ALL CONTRACTORS INCLUDING INSTALLERS.

Trusses require extreme care in fabricating, handling, shipping, installing and bracing. Refer to and follow the latest edition of BCSI (Building Component Safety Information, by TPI and WTCA) for safety practices prior to performing these functions. Installers shall provide temporary bracing per BCSI. Unless noted otherwise, top chord shall have properly attached structural sheathing and bottom chord shall have a properly attached rigid ceiling. Locations shown for permanent lateral restraint of webs shall have bracing installed per BCSI sections B3, B7 or B10, as applicable.

ITW Building Components Group Inc. (ITWBCG) shall not be responsible for any deviation from this design, any failure to build the truss in conformance with ANSI/TPI 1, or for handling, shipping, installation & bracing of trusses. Apply plates to each face of truss and position as shown above and on the Joint Details, unless noted otherwise. Refer to drawings 160A-Z for standard plate positions. A seal on this drawing or cover page listing this drawing, indicates acceptance of professional engineering responsibility solely for the design shown. The suitability and use of this design for any structure is the responsibility of the Building Designer per ANSI/TPI 1 Sec.2. For more information see: This job's general notes page; ITW-BCG: www.itwbcg.com; TPI: www.tpinst.org; WTCA: www.sbcindustry.com; ICC: www.iccsafe.org

WALTER P. FINN
LICENSE
No. 22839
STATE OF FLORIDA
PROFESSIONAL ENGINEER
10/31/2012

TC LL	20.0 PSF	REF	R9114- 71714
TC DL	10.0 PSF	DATE	10/31/12
BC DL	10.0 PSF	DRW	HCUSR9114 12305002
BC LL	0.0 PSF	HC-ENG	JB/WPF
TOT.LD.	40.0 PSF	SEQN-	287280
DUR.FAC.	1.25		
SPACING	24.0"	JREF-	1UQS9114Z04

THIS DWG PREPARED FROM COMPUTER INPUT (LOADS & DIMENSIONS) SUBMITTED BY TRUSS MFR.

(12-175--Fill in later Will Robinson Residence -- Lake City, FL - BV 30'10" Common)

Top chord 2x4 SP M-30
Bot chord 2x4 SP M-30
Webs 2x4 SP #3

120 mph wind, 15.00 ft mean hgt, ASCE 7-10, CLOSED bldg, not located within 9.00 ft from roof edge, RISK CAT II, EXP B, wind TC DL=5.0 psf, wind BC DL=5.0 psf. GCpi(+/-)=0.18

(a) Continuous lateral bracing equally spaced on member.

Deflection meets L/240 live and L/180 total load. Creep increase factor for dead load is 1.50.

MWFRS loads based on trusses located at least 15.00 ft. from roof edge.

This design is based on lumber values in effect prior to June 1, 2012 and shall only be used on projects designed and permitted prior to this date unless specifically approved in writing by the building authority having jurisdiction, the building designer and the project owner.

Wind loads and reactions based on MWFRS with additional C&C member design.

Bottom chord checked for 10.00 psf non-concurrent live load.

Shim all supports to solid bearing.

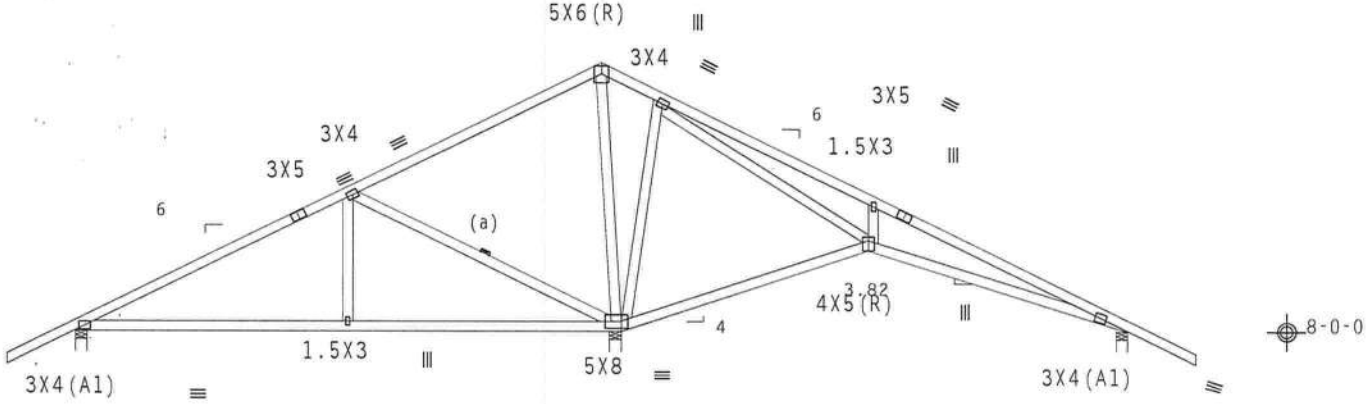

R=639 U=0 W=4"

R=1883 U=0 W=4"

R=645 U=0 W=4"

RL=143/-143

Design Crit: FBC2010Res/TPI-2007(STD) 10.03 11.0209 20 QTY 3 FL/-/4/-/-/R/-

PLT TYP. Wave FT/RT=10%(0%)/0(0)

Scale =.1875"/Ft.

ALPINE
Building Components Group Inc.
Haines City, FL 33844
FL COA #0 278

WARNING READ AND FOLLOW ALL NOTES ON THIS SHEET!
IMPORTANT FURNISH THIS DESIGN TO ALL CONTRACTORS INCLUDING INSTALLERS.

Trusses require extreme care in fabricating, handling, shipping, installing and bracing. Refer to and follow the latest edition of BCSI (Building Component Safety Information, by TPI and WTCA) for recommended practices prior to performing these functions. Installers shall provide temporary bracing per BCSI. Unless noted otherwise, top chord shall have properly attached structural sheathing and bottom chord shall have a properly attached rigid ceiling. Locations shown for permanent lateral restraint of webs shall have bracing installed per BCSI sections B3, B7 or B10, as applicable.

ITW Building Components Group Inc. (ITWBCG) shall not be responsible for any deviation from this design, any failure to build the truss in conformance with ANSI/TPI 1, or for handling, shipping, installing and bracing of trusses. Apply plates to each face of truss and position as shown above and on the Joint Details, unless noted otherwise. Refer to drawings 16DA-Z for standard plate positions. A seal on this drawing or cover page listing this drawing, indicates acceptance of professional engineering responsibility solely for the design shown. The suitability and use of this design for any structure is the responsibility of the Building Designer per ANSI/TPI 1 Sec.2. For more information see: This Job's general notes page; ITW-BCG: www.itwbcg.com; TPI: www.tpinst.org; WTCA: www.sbcindustry.com; ICC: www.iccsafe.org

WALTER P. FINN LICENSE No.22839 STATE OF FLORIDA PROFESSIONAL ENGINEER

10/31/2012

TC LL	20.0 PSF	REF	R9114- 71715
TC DL	10.0 PSF	DATE	10/31/12
BC DL	10.0 PSF	DRW	HCUSR9114 12305003
BC LL	0.0 PSF	HC-ENG	JB/WPF
TOT.LD.	40.0 PSF	SEQN-	287354
DUR.FAC.	1.25		
SPACING	24.0"	JREF-	1UQS9114Z04

THIS DWG PREPARED FROM COMPUTER INPUT (LOADS & DIMENSIONS) SUBMITTED BY TRUSS MFR.

(12-175--Fill in later Will Robinson Residence -- Lake City, FL - BV1 30'10" Common)

Top chord 2x4 SP M-30
Bot chord 2x4 SP M-30
Webs 2x4 SP #3

120 mph wind, 15.00 ft mean hgt, ASCE 7-10, CLOSED bldg, not located within 9.00 ft from roof edge, RISK CAT II, EXP B, wind TC DL=5.0 psf, wind BC DL=5.0 psf. GCpi(+/-)=0.18

(a) Continuous lateral bracing equally spaced on member.

Deflection meets L/240 live and L/180 total load. Creep increase factor for dead load is 1.50.

MWFRS loads based on trusses located at least 15.00 ft. from roof edge.

This design is based on lumber values in effect prior to June 1, 2012 and shall only be used on projects designed and permitted prior to this date unless specifically approved in writing by the building authority having jurisdiction, the building designer and the project owner.

Wind loads and reactions based on MWFRS with additional C&C member design.

Bottom chord checked for 10.00 psf non-concurrent live load.

Shim all supports to solid bearing.

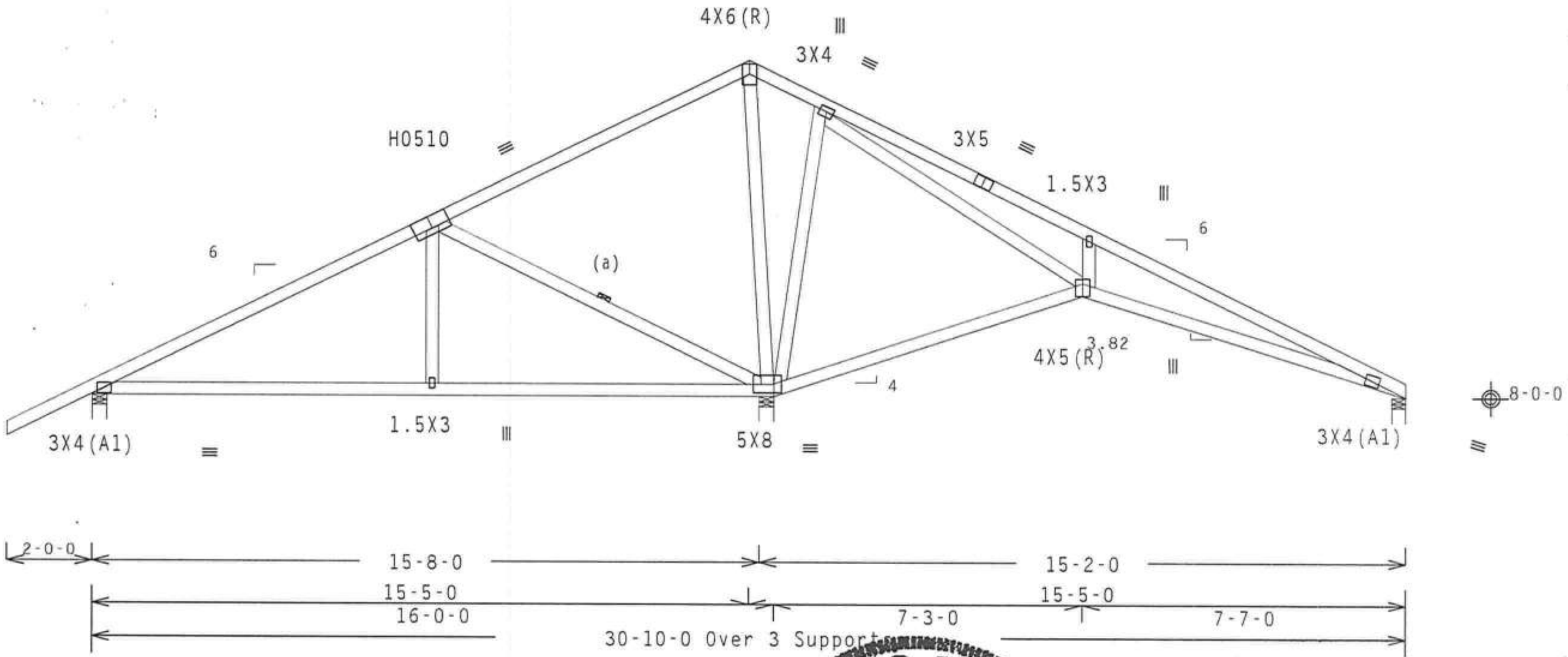

R=636 U=0 W=4"

RL=125/-132

R=19... W=4"

R=294 U=0 W=4"

PLT TYP. 20 Gauge HS,Wave

Design Crit: FBC2010Res/TPI-2007(STD)
FT/RT=10%(0%)/0(0) 10.03.

QTY: FL/-/4/-/-/R/- Scale =.25"/Ft.

WARNING READ AND FOLLOW ALL NOTES ON THIS SHEET!
IMPORTANT FURNISH THIS DESIGN TO ALL CONTRACTORS INCLUDING INSTALLERS.

Trusses require extreme care in fabricating, handling, shipping, installing and bracing. Refer to and follow the latest edition of BCSI (Building Component Safety Information, by TPI and WTCA) for safety practices prior to performing these functions. Installers shall provide temporary bracing per BCSI. Unless noted otherwise, top chord shall have properly attached structural sheathing and bottom chord shall have a properly attached rigid ceiling. Locations shown for permanent lateral restraint of webs shall have bracing installed per BCSI sections B3, B7 or B10, as applicable.

ITW Building Components Group Inc. (ITWBCG) shall not be responsible for any deviation from this design, any failure to build the truss in conformance with ANSI/TPI 1, or for handling, shipping, installation & bracing of trusses. Apply plates to each face of truss and position as shown above and on the Joint Details, unless noted otherwise. Refer to drawings 160A-Z for standard plate positions. A seal on this drawing or cover page listing this drawing, indicates acceptance of professional engineering responsibility solely for the design shown. The suitability and use of this design for any structure is the responsibility of the Building Designer per ANSI/TPI 1 Sec.2. For more information see: This job's general notes page; ITW-BCG: www.itwbcg.com; TPI: www.tpinst.org; WTCA: www.sbcindustry.com; ICC: www.iccsafe.org

ALPINE
Building Components Group Inc.
Haines City, FL 33844
FL COA #0 278

WALTER P. FINN
LICENSE
No. 22839
STATE OF FLORIDA
PROFESSIONAL ENGINEER
10/31/2012

TC LL	20.0 PSF	REF	R9114- 71716
TC DL	10.0 PSF	DATE	10/31/12
BC DL	10.0 PSF	DRW	HCUSR9114 12305004
BC LL	0.0 PSF	HC-ENG	JB/WPF
TOT.LD.	40.0 PSF	SEQN-	287374
DUR.FAC.	1.25		
SPACING	24.0"	JREF-	1UQS9114Z04

THIS DWG PREPARED FROM COMPUTER INPUT (LOADS & DIMENSIONS) SUBMITTED BY TRUSS MFR.

(12-175--Fill in later Will Robinson Residence -- Lake City, FL - AV 35'6" Common)

Top chord 2x4 SP M-30
Bot chord 2x4 SP M-30
Webs 2x4 SP #3

Negative reaction(s) of -345# MAX. (See below) from a non-wind load case requires uplift connection.

(a) Continuous lateral bracing equally spaced on member.

Truss passed check for 20 psf additional bottom chord live load in areas with 42"-high x 24"-wide clearance.

Bottom chord checked for 10.00 psf non-concurrent live load.

MWFRS loads based on trusses located at least 15.00 ft. from roof edge.

This design is based on lumber values in effect prior to June 1, 2012 and shall only be used on projects designed and permitted prior to this date unless specifically approved in writing by the building authority having jurisdiction, the building designer and the project owner.

120 mph wind, 15.00 ft mean hgt, ASCE 7-10, CLOSED bldg, not located within 9.00 ft from roof edge, RISK CAT II, EXP B, wind TC DL=5.0 psf, wind BC DL=5.0 psf. GCpi(+/-)=0.18

Wind loads and reactions based on MWFRS with additional C&C member design.

Deflection meets L/240 live and L/180 total load. Creep increase factor for dead load is 1.50.

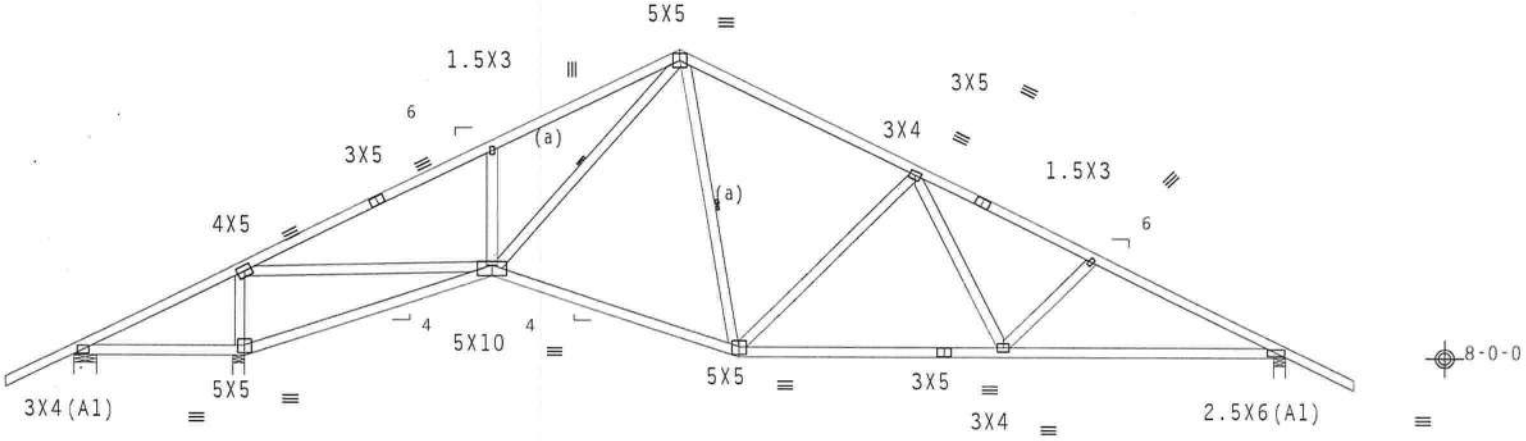

Design Crit: FBC2010Res/TPI-2007(STD) 10.03.11.0209.20 QTY 9 FL/-/4/-/-/R/-

PLT TYP. Wave FT/RT=10%(0%)/0(0) Scale =.1875"/Ft.

ALPINE
Building Components Group Inc.
Haines City, FL 33844
FL COA #0 278

WARNING READ AND FOLLOW ALL NOTES ON THIS SHEET!
IMPORTANT FURNISH THIS DESIGN TO ALL CONTRACTORS INCLUDING INSTALLERS.

Trusses require extreme care in fabricating, handling, shipping, installing and bracing. Refer to and follow the latest edition of BCSI (Building Component Safety Information, by TPI and WTCA) for safety practices prior to performing these functions. Installers shall provide temporary bracing per BCSI. Unless noted otherwise, top chord shall have properly attached structural sheathing and bottom chord shall have a properly attached rigid ceiling. Locations shown for permanent lateral restraint of webs shall have bracing installed per BCSI sections B3, B7 or B10, as applicable.

ITW Building Components Group Inc. (ITWBCG) shall not be responsible for any deviation from this design, any failure to build the truss in conformance with ANSI/TPI 1, or for handling, shipping, installing and bracing of trusses. Apply plates to each face of truss and position as shown above and on the Joint Details, unless noted otherwise. Refer to drawings 16DA-Z for standard plate positions. A seal on this drawing or cover page listing this drawing, indicates acceptance of professional engineering responsibility solely for the design shown. The suitability and use of this design for any structure is the responsibility of the Building Designer per ANSI/TPI 1 Sec.2. For more information see: This job's general notes page; ITW-BCG: www.itwbcg.com; TPI: www.tpinst.org; WTCA: www.sbcindustry.com; ICC: www.iccsafe.org

WALTER P. FINN LICENSE No. 22839 STATE OF FLORIDA PROFESSIONAL ENGINEER
10/31/2012

TC LL	20.0 PSF	REF	R9114- 71717
TC DL	10.0 PSF	DATE	10/31/12
BC DL	10.0 PSF	DRW	HCUSR9114 12305005
BC LL	0.0 PSF	HC-ENG	JB/WPF
TOT.LD.	40.0 PSF	SEQN-	287205
DUR.FAC.	1.25		
SPACING	24.0"	JREF-	1UQS9114Z04

THIS DWG PREPARED FROM COMPUTER INPUT (LOADS & DIMENSIONS) SUBMITTED BY TRUSS MFR.

(12-175--Fill in later Will Robinson Residence -- Lake City, FL - AVGE 35'6" Gable)

Top chord 2x4 SP #1
Bot chord 2x4 SP #1
Webs 2x4 SP #3
:Stack Chord SC1 2x4 SP #1:

Brg blocks:0.131"x3", min. nails

brg	x-loc	#blocks	length/blk	#nails/blk	wall plate
4	19.500'	1	12"	6	Rigid Surface

Brg block to be same size and species as chord.
Refer to drawing CNNAILSP0109 for more information.

Gable end supports 8" max rake overhang.

See DWGS A12015ENC100212, GBLLETIN0212, & GABRST100212 for more requirements.

Stacked top chord must NOT be notched or cut in area (NNL). Dropped top chord braced at 24" o.c. intervals. Attach stacked top chord (SC) to dropped top chord in notchable area using 3x4 tie-plates 24" o.c. Center plate on stacked/dropped chord interface, plate length perpendicular to chord length. Splice top chord in notchable area using 3x6.

Deflection meets L/240 live and L/180 total load. Creep increase factor for dead load is 1.50.

This design is based on lumber values in effect prior to June 1, 2012 and shall only be used on projects designed and permitted prior to this date unless specifically approved in writing by the building authority having jurisdiction, the building designer and the project owner.

Negative reaction(s) of -205# MAX. (See below) from a non-wind load case requires uplift connection.

120 mph wind, 15.00 ft mean hgt, ASCE 7-10, CLOSED bldg, Located anywhere in roof, RISK CAT II, EXP B, wind TC DL=5.0 psf, wind BC DL=5.0 psf. GCpi(+/-)=0.18

Wind loads and reactions based on MWFRS with additional C&C member design.

(a) 1x4 #3SRB SPF-S or better "L" brace. 80% length of web member. Attach with 8d Box or Gun (0.113"x2.5",min.)nails @ 6" OC.

In lieu of structural panels use purlins to brace TC @ 24" OC.

Bottom chord checked for 10.00 psf non-concurrent live load.

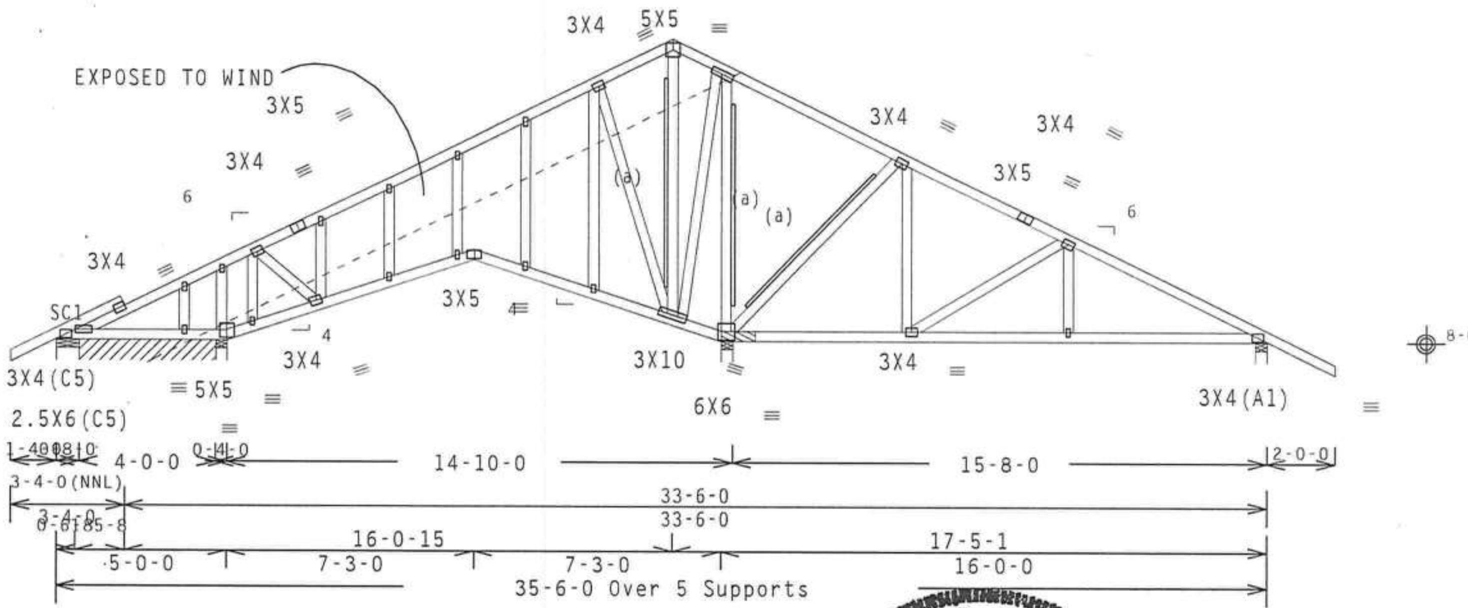

R=100/-194 U=105 W=8"
R=16/-51 PLF U=18 PLF W=4-0-0
R=2066 U=24 W=4"
R=4048 U=0 W
R=943 U=52 W=4"
RL=162/-158

Note: All Plates Are 1.5X3 Except As Shown.

Design Crit: FBC2010Res/TPI-2007(STD
FT/RT=10%(0%)/0(0)
10.03.
QTY:

PLT TYP. Wave

ALPINE
Building Components Group Inc.
Haines City, FL 33844
FL COA #0 278

WARNING READ AND FOLLOW ALL NOTES ON THIS SHEET!
IMPORTANT FURNISH THIS DESIGN TO ALL CONTRACTORS INCLUDING INSTALLERS.

Trusses require extreme care in fabricating, handling, shipping, installing and bracing. Refer to and follow the latest edition of BCSI (Building Component Safety Information, by TPI and WTCA) for safety practices prior to performing these functions. Installers shall provide temporary bracing per BCSI. Unless noted otherwise, top chord shall have properly attached structural sheathing and bottom chord shall have a properly attached rigid ceiling. Locations shown for permanent lateral restraint of webs shall have bracing installed per BCSI sections B3, B7 or B10, as applicable.

ITW Building Components Group Inc. (ITWBCG) shall not be responsible for any deviation from this design, any failure to build the truss in conformance with ANSI/TPI 1, or for handling, shipping, installation & bracing of trusses. Apply plates to each face of truss and position as shown above and on the Joint Details, unless noted otherwise. Refer to drawings 160A-Z for standard plate positions. A seal on this drawing or cover page listing this drawing, indicates acceptance of professional engineering responsibility solely for the design shown. The suitability and use of this design for any structure is the responsibility of the Building Designer per ANSI/TPI 1 Sec.2. For more information see: This job's general notes page; ITW-BCG: www.itwbcg.com; TPI: www.tpinst.org; WTCA: www.sbcindustry.com; ICC: www.iccsafe.org

WALTER P. FINN LICENSE No. 22839 STATE OF FLORIDA PROFESSIONAL ENGINEER

10/31/2012

FL/-/4/-/-/R/-		
TC LL	20.0 PSF	REF R9114- 71718
TC DL	10.0 PSF	DATE 10/31/12
BC DL	10.0 PSF	DRW HCUSR9114 12305008
BC LL	0.0 PSF	HC-ENG JB/WPF
TOT.LD.	40.0 PSF	SEQN- 285806
DUR.FAC.	1.25	
SPACING	24.0"	JREF- 1UQS9114Z04

Scale =.1875"/Ft.

THIS DWG PREPARED FROM COMPUTER INPUT (LOADS & DIMENSIONS) SUBMITTED BY TRUSS MFR.

(12-175--Fill in later Will Robinson Residence -- Lake City, FL - CCG 20'8"8 Common Girder)

Top chord 2x4 SP #1
Bot chord 2x6 SP SS
Webs 2x4 SP #3

This design is based on lumber values in effect prior to June 1, 2012 and shall only be used on projects designed and permitted prior to this date unless specifically approved in writing by the building authority having jurisdiction, the building designer and the project owner.

120 mph wind, 15.00 ft mean hgt, ASCE 7-10, CLOSED bldg, Located anywhere in roof, RISK CAT II, EXP B, wind TC DL=5.0 psf, wind BC DL=5.0 psf. GCpi(+/-)=0.18

Wind loads and reactions based on MWFRS with additional C&C member design.

Deflection meets L/240 live and L/180 total load. Creep increase factor for dead load is 1.50.

3 COMPLETE TRUSSES REQUIRED

Nail Schedule:0.131"x3", min. nails
Top Chord: 1 Row @12.00" o.c.
Bot Chord: 2 Rows @ 4.50" o.c. (Each Row)
Webs : 1 Row @ 4" o.c.
Repeat nailing as each layer is applied. Use equal spacing between rows and stagger nails in each row to avoid splitting.

Special loads
------(Lumber Dur.Fac.=1.25 / Plate Dur.Fac.=1.25)
TC- From 62 plf at 0.00 to 62 plf at 10.35
TC- From 62 plf at 10.35 to 62 plf at 20.71
BC- From 10 plf at 0.00 to 10 plf at 18.66
BC- From 20 plf at 18.66 to 20 plf at 20.71
BC- 1361.61 lb Conc. Load at 0.66, 2.66, 4.66, 6.66 8.66,10.66,12.66,14.66,16.66,18.66

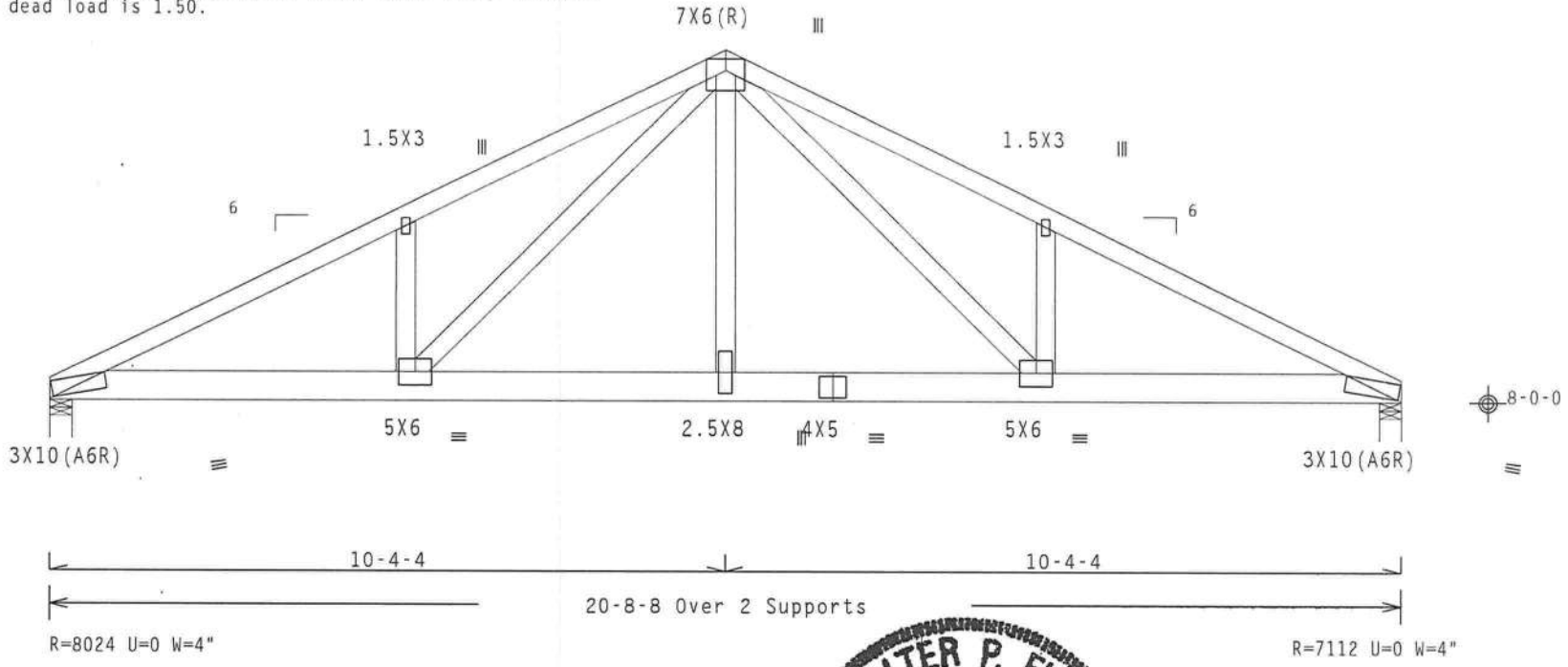

Design Crit: FBC2010Res/TPI-2007(STD)
FT/RT=10%(0%)/0(0) 10.03 11.0209.20 QTY 1 FL/-/4/-/-/R/- Scale =.375"/Ft.

PLT TYP. Wave

ALPINE
Building Components Group Inc.
Haines City, FL 33844
FL COA #0 278

WARNING READ AND FOLLOW ALL NOTES ON THIS SHEET!
IMPORTANT FURNISH THIS DESIGN TO ALL CONTRACTORS INCLUDING INSTALLERS.

Trusses require extreme care in fabricating, handling, shipping, installing and bracing. Refer to and follow the latest edition of BCSI (Building Component Safety Information, by TPI and WTCA) for recommended practices prior to performing these functions. Installers shall provide temporary bracing per BCSI. Unless noted otherwise, top chord shall have properly attached structural sheathing and bottom chord shall have a properly attached rigid ceiling. Locations shown for permanent lateral restraint of webs shall have bracing installed per BCSI sections B3, B7 or B10, as applicable.

ITW Building Components Group Inc. (ITWBCG) shall not be responsible for any deviation from this design, any failure to build the truss in conformance with ANSI/TPI 1, or for handling, shipping, installing and bracing of trusses. Apply plates to each face of truss and position as shown above and on the individual Details, unless noted otherwise. Refer to drawings 160A-Z for standard plate positions. A seal on this drawing or cover page listing this drawing, indicates acceptance of professional engineering responsibility solely for the design shown. The suitability and use of this design for any structure is the responsibility of the Building Designer per ANSI/TPI 1 Sec.2. For more information see: This job's general notes page; ITW-BCG: www.itwbcg.com; TPI: www.tpinst.org; WTCA: www.sbcindustry.com; ICC: www.iccsafe.org

WALTER P. FINN LICENSE No.22839 STATE OF FLORIDA PROFESSIONAL ENGINEER
10/31/2012

TC LL	20.0 PSF	REF	R9114- 71719
TC DL	10.0 PSF	DATE	10/31/12
BC DL	10.0 PSF	DRW	HCUSR9114 12305009
BC LL	0.0 PSF	HC-ENG	JB/WPF
TOT.LD.	40.0 PSF	SEQN-	285772
DUR.FAC.	1.25		
SPACING	24.0"	JREF-	1UQS9114Z04

CLB WEB BRACE SUBSTITUTION

THIS DETAIL IS TO BE USED WHEN CONTINUOUS LATERAL BRACING (CLB) IS SPECIFIED ON A TRUSS DESIGN BUT AN ALTERNATIVE WEB BRACING METHOD IS DESIRED.

NOTES:

THIS DETAIL IS ONLY APPLICABLE FOR CHANGING THE SPECIFIED CLB SHOWN ON SINGLE PLY SEALED DESIGNS TO T-BRACING OR SCAB BRACING.

ALTERNATIVE BRACING SPECIFIED IN CHART BELOW MAY BE CONSERVATIVE. FOR MINIMUM ALTERNATIVE BRACING, RE-RUN DESIGN WITH APPROPRIATE BRACING.

WEB MEMBER SIZE	SPECIFIED CLB BRACING	ALTERNATIVE BRACING T OR L-BRACE	ALTERNATIVE BRACING SCAB BRACE
2X3 OR 2X4	1 ROW	2X4	1-2X4
2X3 OR 2X4	2 ROWS	2X6	2-2X4
2X6	1 ROW	2X4	1-2X6
2X6	2 ROWS	2X6	2-2X4(*)
2X8	1 ROW	2X6	1-2X8
2X8	2 ROWS	2X6	2-2X6(*)

T-BRACE, L-BRACE AND SCAB BRACE TO BE SAME SPECIES AND GRADE OR BETTER THAN WEB MEMBER UNLESS SPECIFIED OTHERWISE ON ENGINEER'S SEALED DESIGN.

(*) CENTER SCAB ON WIDE FACE OF WEB. APPLY (1) SCAB TO EACH FACE OF WEB.

T-BRACING OR L-BRACING:

APPLY TO EITHER SIDE OF WEB NARROW FACE.
ATTACH WITH 10d BOX OR GUN (0.128"x 3.",MIN) NAILS.
AT 6" O.C.
BRACE IS A MINIMUM 80% OF WEB MEMBER LENGTH

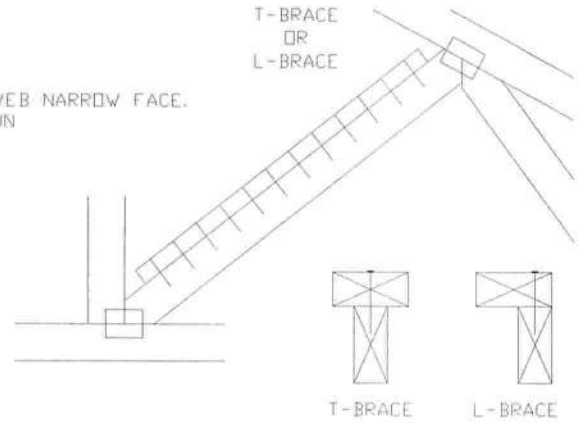

SCAB BRACING:

APPLY SCAB(S) TO WIDE FACE OF WEB.
NO MORE THAN (1) SCAB PER FACE.
ATTACH WITH 10d BOX OR GUN (0.128"x 3.",MIN) NAILS.
AT 6" O.C.
BRACE IS A MINIMUM 80% OF WEB MEMBER LENGTH

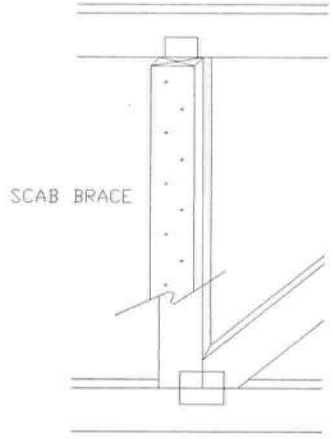

ITW Building Components Group Inc.
Earth City, MO 63045

WARNING READ AND FOLLOW ALL NOTES ON THIS SHEET!
Trusses require extreme care in fabricating, handling, shipping, installing and bracing. Refer to and follow BCSI (Building Component Safety Information, by TPI and WTCA) for safety practices prior to performing these functions. Installers shall provide temporary bracing per BCSI. Unless noted otherwise, top chord shall have properly attached structural panels and bottom chord shall have properly attached rigid ceiling. Locations shown for permanent lateral restraint of webs shall have bracing installed per BCSI sections B3 & B7. See this job's general notes page for more information.

IMPORTANT FURNISH COPY OF THIS DESIGN TO INSTALLATION CONTRACTOR.
ITW Building Components Group Inc. (ITWBCG) shall not be responsible for any deviation from this design, any failure to build the truss in conformance with TPI, or fabricating, handling, shipping, installing & bracing of trusses. ITWBCG connector plates are made of 20/18/16GA (W,H/S/K) ASTM grade 37/40/60 (K/W/H,S) galv. steel. Apply plates to each face of truss, positioned as shown on and on Joint Details.
A seal on this drawing or cover page indicates acceptance and professional engineering responsibility solely for the truss component design shown. The suitability and use of this component for any building is the responsibility of the Building Designer per ANSI/TPI 1 Sec. 2.
ITW-BCG: www.itwbcg.com; TPI: www.tpinst.com; WTCA: www.sbcindustry.com; ICC: www.iccsafe.org

WALTER P. FINN LICENSE No. 22839 STATE OF FLORIDA PROFESSIONAL ENGINEER

12
10/31/2012

TC LL	PSF	REF	CLB SUBST.
TC DL	PSF	DATE	1/1/09
BC DL	PSF	DRWG	BRCLBSUB0109
BC LL	PSF		
TOT. L.D.	PSF		
DUR. FAC.			
SPACING			

Gable Stud Reinforcement Detail

ASCE 7-10: 120 mph Wind Speed, 15' Mean Height, Enclosed, Exposure C, Kzt = 1.00

Or: 100 mph Wind Speed, 15' Mean Height, Partially Enclosed, Exposure C, Kzt = 1.00
Or: 100 mph Wind Speed, 15' Mean Height, Enclosed, Exposure D, Kzt = 1.00

Max Gable Vertical Length

2x4 Gable Vertical Spacing	Species	Brace Grade	No Braces	(1) 1x4 "L" Brace * Group A	(1) 1x4 "L" Brace * Group B	(1) 2x4 "L" Brace * Group A	(1) 2x4 "L" Brace * Group B	(2) 2x4 "L" Brace ** Group A	(2) 2x4 "L" Brace ** Group B	(1) 2x6 "L" Brace * Group A	(1) 2x6 "L" Brace * Group B	(2) 2x6 "L" Brace ** Group A	(2) 2x6 "L" Brace ** Group B
24" o.c.	SPF HF	#1 / #2	4' 10"	8' 2"	8' 6"	9' 8"	10' 1"	11' 6"	12' 0"	14' 0"	14' 0"	14' 0"	14' 0"
		#3	4' 7"	7' 9"	8' 3"	9' 7"	9' 11"	11' 5"	11' 10"	14' 0"	14' 0"	14' 0"	14' 0"
		Stud	4' 7"	8' 1"	8' 4"	9' 7"	9' 11"	11' 5"	11' 10"	14' 0"	14' 0"	14' 0"	14' 0"
		Standard	4' 7"	8' 1"	8' 4"	9' 7"	9' 11"	11' 5"	11' 10"	14' 0"	14' 0"	14' 0"	14' 0"
	SP DFL	#1	4' 11"	8' 3"	8' 7"	9' 9"	10' 1"	11' 7"	12' 1"	14' 0"	14' 0"	14' 0"	14' 0"
		#2	4' 10"	8' 2"	8' 6"	9' 8"	10' 1"	11' 6"	12' 0"	14' 0"	14' 0"	14' 0"	14' 0"
		#3	4' 7"	6' 11"	7' 4"	9' 3"	9' 10"	11' 5"	11' 10"	14' 0"	14' 0"	14' 0"	14' 0"
		Stud	4' 7"	6' 11"	7' 4"	9' 3"	9' 10"	11' 5"	11' 10"	14' 0"	14' 0"	14' 0"	14' 0"
		Standard	4' 7"	6' 0"	6' 4"	8' 0"	8' 6"	10' 10"	11' 7"	12' 6"	13' 5"	14' 0"	14' 0"
16" o.c.	SPF HF	#1 / #2	5' 6"	9' 5"	9' 9"	11' 1"	11' 6"	13' 2"	13' 9"	14' 0"	14' 0"	14' 0"	14' 0"
		#3	5' 3"	9' 3"	9' 9"	10' 11"	11' 4"	13' 0"	13' 7"	14' 0"	14' 0"	14' 0"	14' 0"
		Stud	5' 3"	9' 3"	9' 7"	10' 11"	11' 4"	13' 0"	13' 7"	14' 0"	14' 0"	14' 0"	14' 0"
		Standard	5' 3"	9' 3"	9' 7"	10' 11"	11' 4"	13' 0"	13' 7"	14' 0"	14' 0"	14' 0"	14' 0"
	SP DFL	#1	5' 8"	9' 5"	9' 10"	11' 2"	11' 7"	13' 3"	13' 10"	14' 0"	14' 0"	14' 0"	14' 0"
		#2	5' 6"	9' 5"	9' 9"	11' 1"	11' 6"	13' 2"	13' 9"	14' 0"	14' 0"	14' 0"	14' 0"
		#3	5' 3"	8' 6"	9' 0"	10' 11"	11' 4"	13' 0"	13' 7"	14' 0"	14' 0"	14' 0"	14' 0"
		Stud	5' 3"	8' 6"	9' 0"	10' 11"	11' 4"	13' 0"	13' 7"	14' 0"	14' 0"	14' 0"	14' 0"
		Standard	5' 3"	7' 4"	7' 10"	9' 9"	10' 5"	13' 0"	13' 7"	14' 0"	14' 0"	14' 0"	14' 0"
12" o.c.	SPF HF	#1 / #2	6' 1"	10' 4"	10' 8"	12' 2"	12' 8"	13' 2"	14' 0"	14' 0"	14' 0"	14' 0"	14' 0"
		#3	5' 9"	10' 2"	10' 7"	12' 0"	12' 6"	14' 0"	14' 0"	14' 0"	14' 0"	14' 0"	14' 0"
		Stud	5' 9"	10' 2"	10' 7"	12' 0"	12' 6"	14' 0"	14' 0"	14' 0"	14' 0"	14' 0"	14' 0"
		Standard	5' 9"	10' 2"	10' 7"	12' 0"	12' 6"	14' 0"	14' 0"	14' 0"	14' 0"	14' 0"	14' 0"
	SP DFL	#1	6' 2"	10' 5"	10' 9"	12' 3"	12' 9"	14' 0"	14' 0"	14' 0"	14' 0"	14' 0"	14' 0"
		#2	6' 1"	10' 4"	10' 8"	12' 2"	12' 8"	14' 0"	14' 0"	14' 0"	14' 0"	14' 0"	14' 0"
		#3	5' 9"	9' 9"	10' 5"	12' 0"	12' 6"	14' 0"	14' 0"	14' 0"	14' 0"	14' 0"	14' 0"
		Stud	5' 9"	9' 9"	10' 5"	12' 0"	12' 6"	14' 0"	14' 0"	14' 0"	14' 0"	14' 0"	14' 0"
		Standard	5' 9"	8' 6"	9' 0"	11' 3"	12' 1"	14' 0"	14' 0"	14' 0"	14' 0"	14' 0"	14' 0"

Bracing Group Species and Grades:

Group A:

Spruce-Pine-Fir: #1 / #2 Standard; #3 Stud

Hem-Fir: #2 Stud; #3 Standard

Douglas Fir-Larch: #3; Stud; Standard

Southern Pine***: #3; Stud; Standard

Group B:

Hem-Fir: #1 & Btr; #1

Douglas Fir-Larch: #1; #2

Southern Pine***: #1; #2

1x4 Braces shall be SRB (Stress-Rated Board).

***For 1x4 So. Pine use only Industrial 55 or Industrial 45 Stress-Rated Boards. Group B values may be used with these grades.

Gable Truss Detail Notes:

Wind Load deflection criterion is L/240.

Provide uplift connections for 35 plf over continuous bearing (5 psf TC Dead Load).

Gable end supports load from 4' 0" outlookers with 2' 0" overhang, or 12" plywood overhang.

So. Pine lumber design values based on the ALSC January, 2012 rulin

Attach "L" braces with 10d (0.128"x3.0" min) nails.

* For (1) "L" brace: space nails at 2" o.c. in 18" end zones and 4" o.c. between zones.

** For (2) "L" braces: space nails at 3" o.c. in 18" end zones and 6" o.c. between zones.

"L" bracing must be a minimum of 80% of web member length.

Gable Vertical Plate Sizes	
Vertical Length	No Splice
Less than 4' 0"	1X4 or 2X3
Greater than 4' 0", but less than 11' 6"	2X4
Greather than 11' 6"	2.5X4

+ Refer to common truss design for peak, splice, and heel plates.

Refer to the Building Designer for conditions not addressed by this detail.

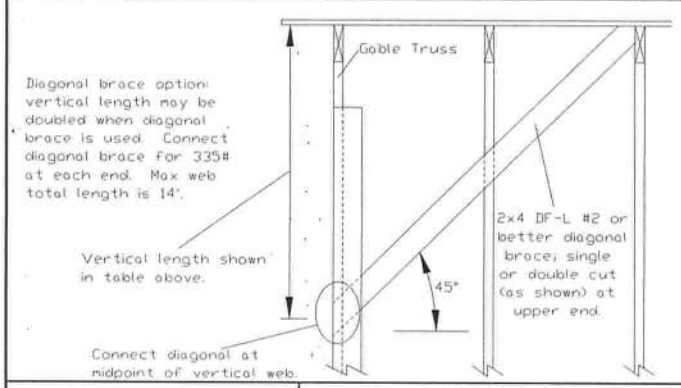

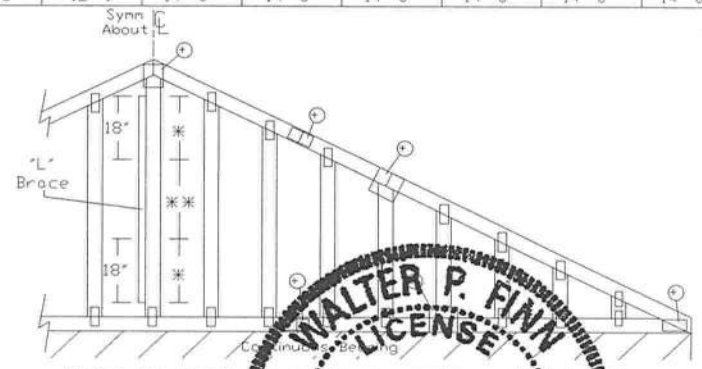

Refer to chart above for max gable vertical length.

WALTER P. FINN LICENSE No. 22839 STATE OF FLORIDA PROFESSIONAL ENGINEER

10/31/2012

ITW Building Components Group Inc.

Earth City, MO 63045

WARNING READ AND FOLLOW ALL NOTES ON THIS DRAWING!
IMPORTANT FURNISH THIS DRAWING TO ALL CONTRACTORS INCLUDING THE INSTALLERS.

Trusses require extreme care in fabricating, handling, shipping, installing and bracing. Refer to and follow the latest edition of BCSI (Building Component Safety Information, by TPI and WTCA) for safety practices prior to performing these functions. Installers shall provide temporary bracing per BCSI. Unless noted otherwise, top chord shall have properly attached structural sheathing and bottom chord shall have a properly attached rigid ceiling. Locations shown for permanent lateral restraint of webs shall have bracing installed per BCSI sections B3, B7 or B10, as applicable. Apply plates to each face of truss and position as shown above and on the Joint Details, unless noted otherwise. Refer to drawings 160A-Z for standard plate positions.

ITW Building Components Group Inc. shall not be responsible for any deviation from this drawing, or failure to build the truss in conformance with ANSI/TPI 1, or for handling, shipping, installation & bracing of trusses. A seal on this drawing or cover page listing this drawing, indicates acceptance of professional engineering responsibility solely for the design shown. The suitability and use of this drawing for any structure is the responsibility of the Building Designer per ANSI/TPI 1 Sec.2.
For more information see this job's general notes page and these web sites:
ITWBCG: www.itwbcg.com; TPI: www.tpinst.org; WTCA: www.sbcindustry.org; ICC: www.iccsafe.org

MAX. TOT. LD. 60 PSF

MAX. SPACING 24.0"

REF	ASCE7-10-GAB12015
DATE	2/14/12
DRWG	A12015ENC100212

Gable Detail
For Let-in Verticals

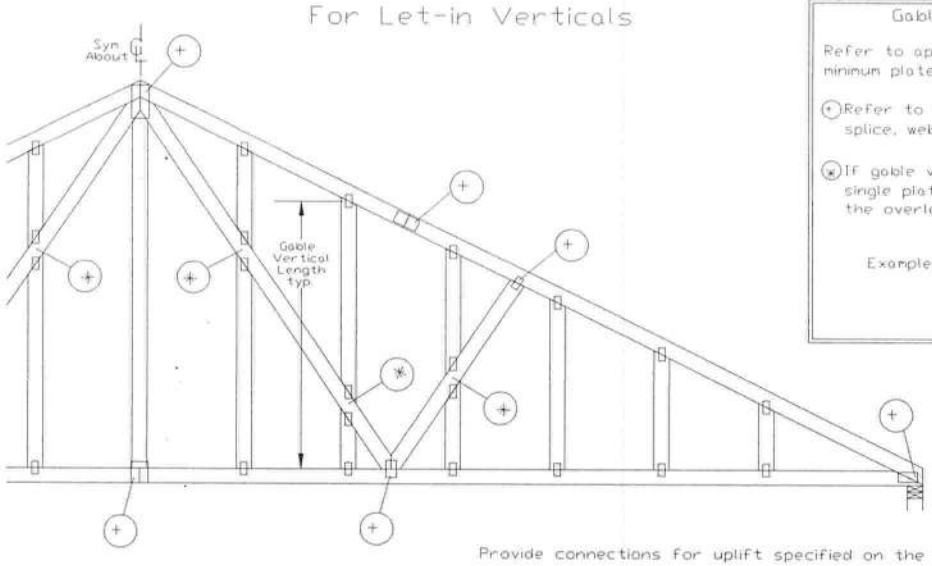

Gable Truss Plate Sizes

Refer to appropriate ITW gable detail for minimum plate sizes for vertical studs.

(+) Refer to Engineered truss design for peak, splice, web, and heel plates.

(*) If gable vertical plates overlap, use a single plate that covers the total area of the overlapped plates to span the web.

Example:

"T" Reinforcement Attachment Detail

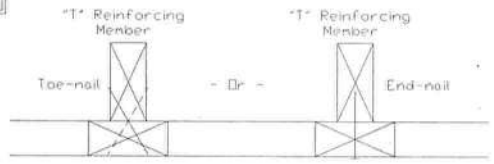

Provide connections for uplift specified on the engineered truss design.

Attach each "T" reinforcing member with

End Driven Nails:
10d Common (0.148"x 3.",min) Nails at 4" o.c. plus
(4) nails in the top and bottom chords.

Toenailed Nails:
10d Common (0.148"x3",min) Toenails at 4" o.c. plus
(4) toenails in the top and bottom chords.

This detail to be used with the appropriate ITW gable detail for ASCE wind load.

ASCE 7-98 Gable Detail Drawings
A13015980109, A12015980109, A11015980109, A10015980109,
A13030980109, A12030980109, A11030980109, A10030980109

ASCE 7-02 Gable Detail Drawings
A13015020109, A12015020109, A11015020109, A10015020109, A14015020109,
A13030020109, A12030020109, A11030020109, A10030020109, A14030020109

ASCE 7-05 Gable Detail Drawings
A13015050109, A12015050109, A11015050109, A10015050109, A14015050109,
A13030050109, A12030050109, A11030050109, A10030050109, A14030050109

ASCE 7-10 Gable Detail Drawings
A11515ENC100212, A12015ENC100212, A14015ENC100212,
A18015ENC100212, A20015ENC100212, A20015ENC[illegible]
A11530ENC100212, A12030ENC100212, A14030[illegible]
A18030ENC100212, A20030ENC100212, A20[illegible]

See appropriate ITW gable detail for maximum unreinforced gable vertical length.

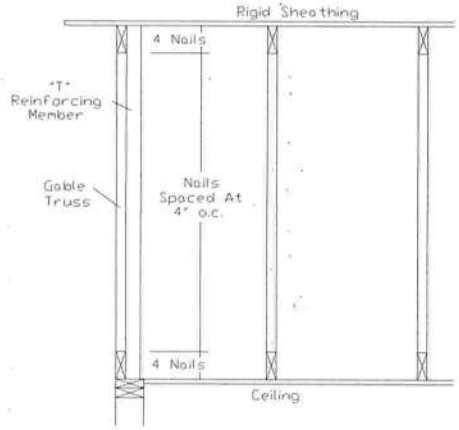

To convert from "L" to "T" reinforcing members, multiply "T" increase by length (based on appropriate ITW gable detail).

Maximum allowable "T" reinforced gable vertical length is 14' from top to bottom chord.

"T" reinforcing member material must match size, specie, and grade of the "L" reinforcing member.

Web Length Increase w/ "T" Brace

"T" Reinf. Mbr. Size	"T" Increase
2x4	30 %
2x6	20 %

Example:
ASCE 7-10 Wind Speed = 120 mph
Mean Roof Height = 30 ft, Kzt = 1.00
Gable Vertical = 24"o.c. SP #3
"T" Reinforcing Member Size = 2x4
"T" Brace Increase (From Above) = 30% = 1.30
(1) 2x4 "L" Brace Length = 8' 7"
Maximum "T" Reinforced Gable Vertical Length
1.30 x 8' 7" = 11' 2"

ITW Building Components Group Inc.

Earth City, MO 63045

WARNING! READ AND FOLLOW ALL NOTES ON THIS DRAWING!
IMPORTANT FURNISH THIS DRAWING TO ALL CONTRACTORS INCLUDING THE INSTALLERS.

Trusses require extreme care in fabricating, handling, shipping, installing and bracing. Refer to and follow the latest edition of BCSI (Building Component Safety Information, by TPI and WTCA) for recommended practices prior to performing these functions. Installers shall provide temporary bracing per BCSI. Unless noted otherwise, top chord shall have properly attached structural sheathing and bottom chord shall have a properly attached rigid ceiling. Locations shown for permanent lateral restraint of webs shall have bracing installed per BCSI sections B3, B7 or B10, as applicable. Apply plates to each face of truss and position as shown above and on the Joint Details, unless noted otherwise. Refer to drawings 160A-Z for standard plate positions.

ITW Building Components Group Inc. shall not be responsible for any deviation from this drawing, or failure to build the truss in conformance with ANSI/TPI 1, or for handling, shipping, installation & bracing of trusses. A seal on this drawing or cover page listing this drawing, indicates acceptance of professional engineering responsibility solely for the design shown. The suitability and use of this drawing for any structure is the responsibility of the Building Designer per ANSI/TPI 1 Sec.2.
For more information see this job's general notes page and these web sites:
ITWBCG: www.itwbcg.com; TPI: www.tpinst.org; WTCA: www.sbcindustry.org; ICC: www.iccsafe.or

WALTER P. FINN
LICENSE
No. 22839
STATE OF FLORIDA
PROFESSIONAL ENGINEER
07 12
10/31/2012

MAX. TOT. LD. 60 PSF
DUR. FAC. ANY
MAX. SPACING 24.0"

REF LET-IN VERT
DATE 2/16/12
DRWG GBLLETIN0212

ASCE 7-10: 120 mph, 30' Mean Height, Closed, Exposure C
Common Residential Gable End Wind Bracing Requirements - Stiffeners

120 mph, 30ft. Mean Hgt, ASCE 7-10, Enclosed, Exp C, or
100 mph, 30ft. Mean Hgt, ASCE 7-10, Enclosed, Exp D, or
100 mph, 30ft. Mean Hgt, ASCE 7-10, Part. Enclosed, Exp C,
Kzt = 1.00, Wind TC DL=5.0 psf, Wind BC DL=5.0 psf.

Lateral chord bracing requirements
Top: Continuous roof sheathing
Bot: Continuous ceiling diaphragm

See Engineer's sealed design referencing this detail for lumber, plates, and other information not shown on this detail.

Nails: 10d box or .gun (0.128"x3",min) nails.

H Less than 4'6" - no stud bracing required

H Greater than 4'6" to 7'6" in length provide a 2x6 stiffback at mid-height and brace stiffback to roof diaphragm every 6'0" (see detail below or refer to DRWG A12030ENC10).

H Greater than 7'6" to 12'0" max: provide a 2x6 stiffback at mid-height and brace to roof diaphragm every 4'0" (see detail below or refer to DRWG A12030ENC10).

✳ Optional 2x L-reinforcement attached to stiffback with 10d box or gun (0.128" x 3", min.) nails @ 6" o.c.

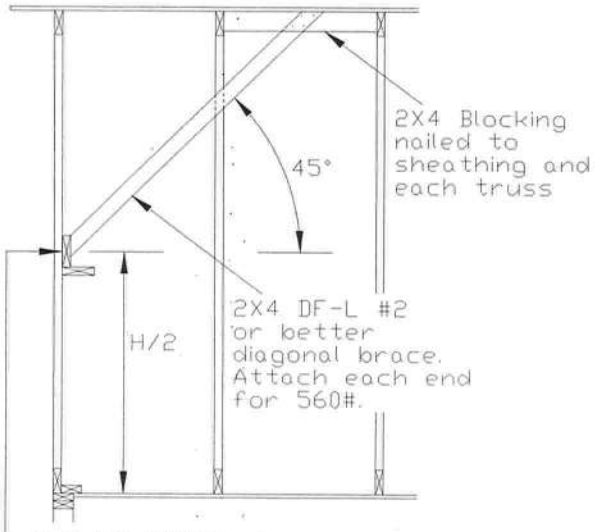

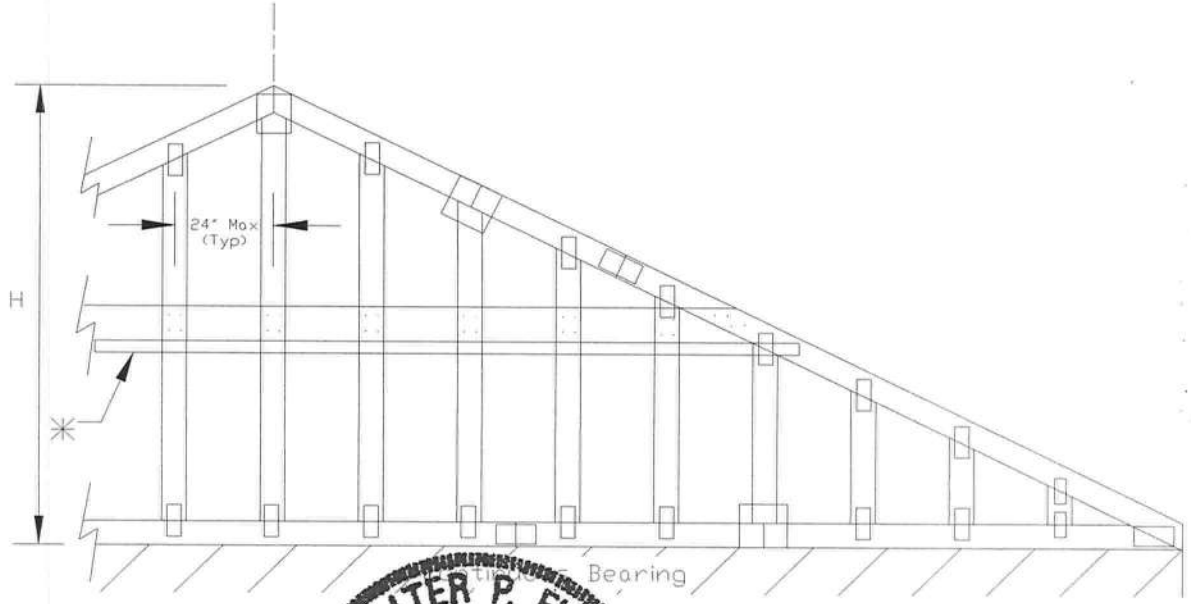

WALTER P. FINN
LICENSE
No. 22839
STATE OF FLORIDA
PROFESSIONAL ENGINEER
10/31/2012

ITW Building Components Group Inc.
Earth City, MO 63045

WARNING! READ AND FOLLOW ALL NOTES ON THIS DRAWING!
IMPORTANT FURNISH THIS DRAWING TO ALL CONTRACTORS INCLUDING THE INSTALLERS.

Trusses require extreme care in fabricating, handling, shipping, installing and bracing. Refer to and follow the latest edition of BCSI (Building Component Safety Information, by TPI and WTCA) for recommended practices prior to performing these functions. Installers shall provide temporary bracing per BCSI. Unless noted otherwise, top chord shall have properly attached structural sheathing and bottom chord shall have a properly attached rigid ceiling. Locations shown for permanent lateral restraint of webs shall have bracing installed per BCSI sections B3, B7 or B10, as applicable. Apply plates to each face of truss and position as shown above and on the Joint Details, unless noted otherwise. Refer to drawings 160A-Z for standard plate positions.

ITW Building Components Group Inc. shall not be responsible for any deviation from this drawing, or failure to build the truss in conformance with ANSI/TPI 1, or for handling, shipping, installation & bracing of trusses. A seal on this drawing or cover page listing this drawing, indicates acceptance of professional engineering responsibility solely for the design shown. The suitability and use of this drawing for any structure is the responsibility of the Building Designer per ANSI/TPI 1 Sec.2.
For more information see this job's general notes page and these web sites:
ITWBCG: www.itwbcg.com; TPI: www.tpinst.org; WTCA: www.sbcindustry.org; ICC: www.iccsafe.or

REF	GE WHALER
DATE	2/14/12
DRWG	GABRST100212

MAX. TOT. LD. 60 PSF

MAX. SPACING

NAIL SPACING DETAIL

MINIMUM SPACING FOR SINGLE BLOCK IS SHOWN. DOUBLE NAIL SPACINGS AND STAGGER NAILING FOR TWO BLOCKS. GREATER SPACING MAY BE REQUIRED TO AVOID SPLITTING.

BLOCK LOCATION, SIZE, LENGTH,GRADE AND TOTAL NUMBER AND TYPE OF NAILS ARE TO BE SPECIFIED ON SEALED DESIGN REFERENCING THIS DETAIL.

LOAD PERPENDICULAR TO GRAIN
A - EDGE DISTANCE AND SPACING BETWEEN STAGGERED ROWS OF NAILS (6 NAIL DIAMETERS)
B - SPACING OF NAILS IN A ROW (12 NAIL DIAMETERS)
C - END DISTANCE (15 NAIL DIAMETERS)

LOAD PARALLEL TO GRAIN
A - EDGE DISTANCE (6 NAIL DIAMETERS)
C - SPACING OF NAILS IN A ROW AND END DISTANCE (15 NAIL DIAMETERS)
D - SPACING BETWEEN STAGGERED ROWS OF NAILS (7 1/2 NAIL DIAMETERS)

IF NAIL HOLES ARE PREBORED, SOME SPACING MAY BE REDUCED BY THE AMOUNTS GIVEN BELOW:
* SPACING MAY BE REDUCED BY 50%
** SPACING MAY BE REDUCED BY 33%

MINIMUM NAIL SPACING DISTANCES

NAIL TYPE	DISTANCES A	B*	C**	D
8d BOX (0.113"X 2.5",MIN)	3/4"	1 3/8"	1 3/4"	7/8"
10d BOX (0.128"X 3.",MIN)	7/8"	1 5/8"	2"	1"
12d BOX (0.128"X 3.25",MIN)	7/8"	1 5/8"	2"	1"
16d BOX (0.135"X 3.5",MIN)	7/8"	1 5/8"	2 1/8"	1 1/8"
20d BOX (0.148"X 4.",MIN)	1"	1 7/8"	2 1/4"	1 1/8"
8d COMMON (0.131"X 2.5",MIN)	7/8"	1 5/8"	2"	1"
10d COMMON (0.148"X 3.",MIN)	1"	1 7/8"	2 1/4"	1 1/8"
12d COMMON (0.148"X 3.25",MIN)	1"	1 7/8"	2 1/4"	1 1/8"
16d COMMON (0.162"X 3.5",MIN)	1'	2"	2 1/2"	1, 1/4"
GUN (0.120"X 2.5",MIN)	3/4"	1 1/2"	1 7/8"	1"
GUN (0.131"X 2.5",MIN)	7/8"	1 5/8"	2"	1"
GUN (0.120"X 3.",MIN)	3/4"	1 1/2"	1 7/8"	1"
GUN (0.131"X 3.",MIN)	7/8"	1 5/8"	2"	1"

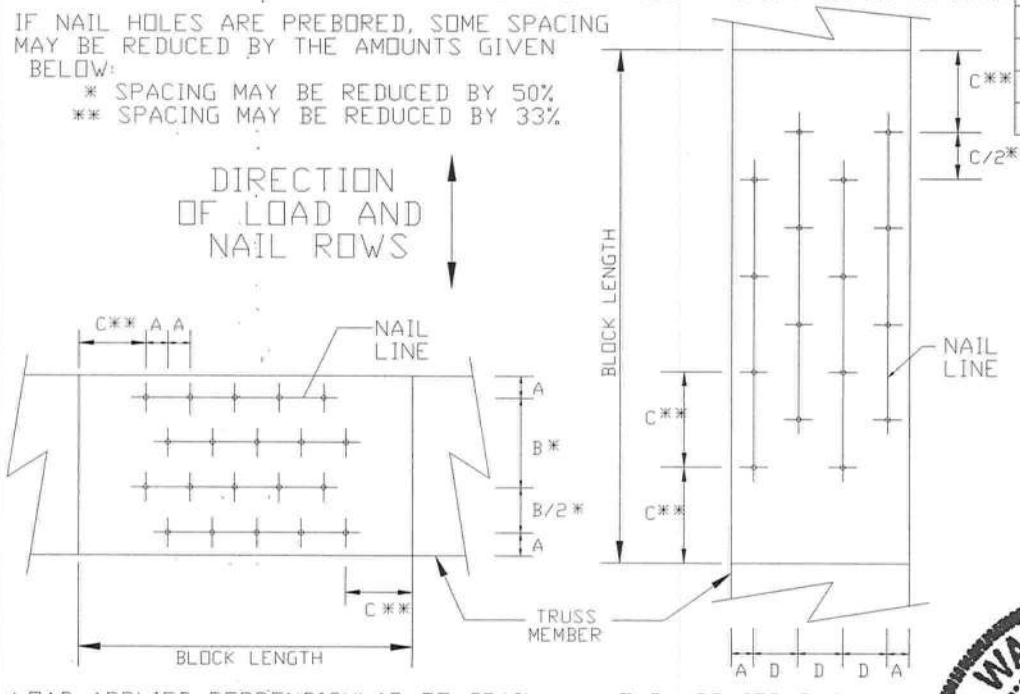

LOAD APPLIED PERPENDICULAR TO GRAIN LOAD APPLIED PARALLEL TO GRAIN

WALTER P. FINN
LICENSE
No. 22839
STATE OF FLORIDA
PROFESSIONAL ENGINEER

10/31/2012

ITW Building Components Group Inc.

Earth City, MO 63045

WARNING READ AND FOLLOW ALL NOTES ON THIS SHEET!
Trusses require extreme care in fabricating, handling, shipping, installing and bracing. Refer to and follow BCSI (Building Component Safety Information, by TPI and WTCA) for safety practices prior to performing these functions. Installers shall provide temporary bracing per BCSI. Unless noted otherwise, top chord shall have properly attached structural panels and bottom chord shall have a properly attached rigid ceiling. Locations shown for permanent lateral restraint of webs shall have bracing installed per BCSI sections B3 & B7. See this job's general notes page for more information.

IMPORTANT FURNISH COPY OF THIS DESIGN TO INSTALLATION CONTRACTOR.
ITW Building Components Group Inc. (ITWBCG) shall not be responsible for any deviation from this design, any failure to build the truss in conformance with TPI, or fabricating, handling, shipping, installing & bracing of trusses. ITWBCG connector plates are made of 20/18/16GA (W,H/S/K) ASTM grade 37/40/60 (K/W/H,S) galv. steel. Apply plates to each face of truss, positioned as shown above and on Joint Details.
A seal on this drawing or cover page indicates acceptance and professional engineering responsibility solely for the truss component design shown. The suitability and use of this component for any building is the responsibility of the Building Designer per ANST/TPI 1 Sec. 2.
ITW-BCG: www.itwbcg.com; TPI: www.tpinst.com; WTCA: www.sbcindustry.com; ICC: www.iccsafe.org

REF	NAIL SPACE
DATE	1/1/09
DRWG	CNNAILSP0109