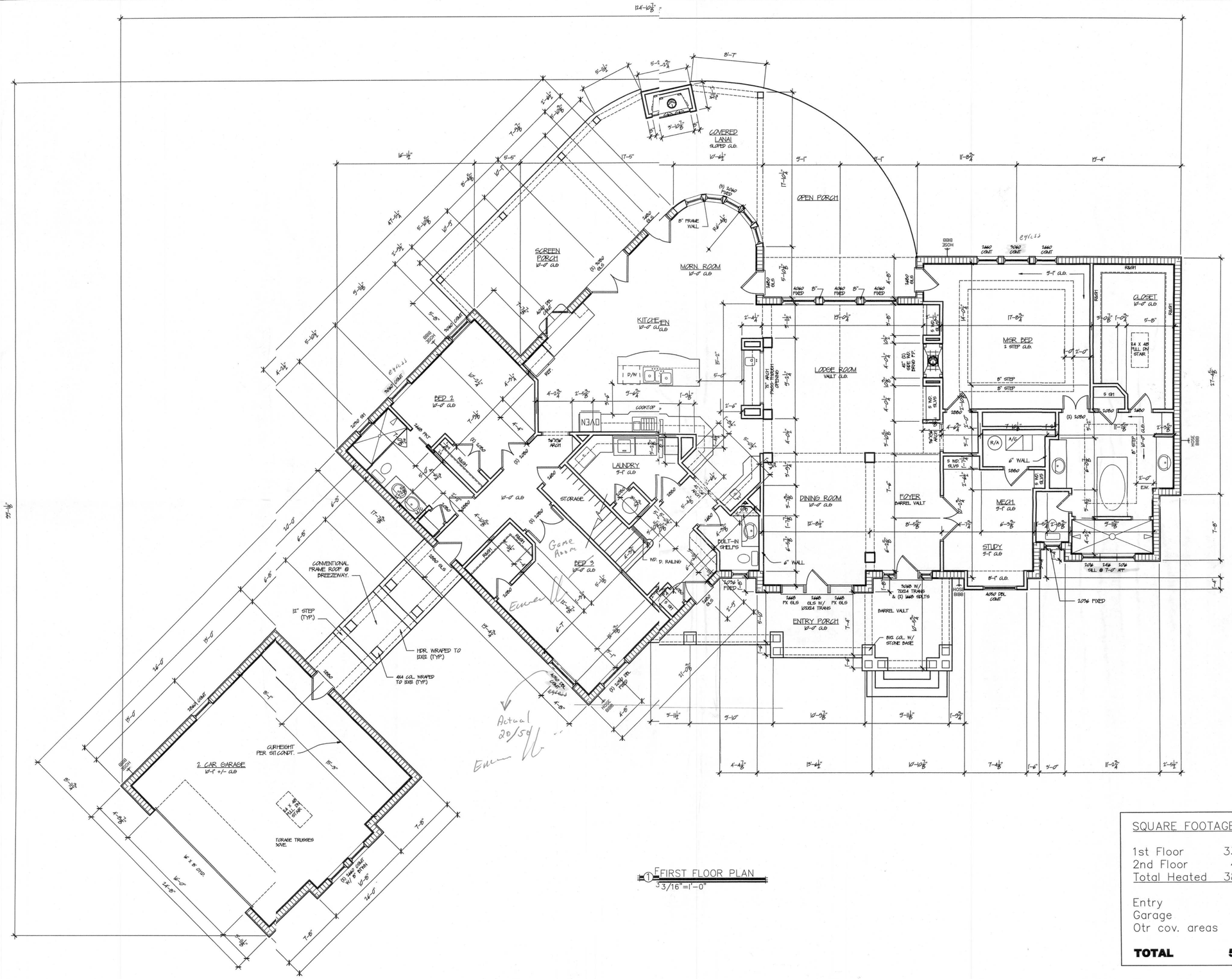

FIRST FLOOR PLAN
3/16"=1'-0"

SQUARE FOOTAGES	
1st Floor	3392
2nd Floor	472
Total Heated	3864
Entry	251
Garage	655
Otr cov. areas	665
TOTAL	**5435**

Builder Boy Inc.
Design Management
7855-803 Argyle Forest Blvd
Jacksonville, Fl 32244
Phone 904-334-4653

THIS DRAWING IS AN INSTRUMENT OF SERVICE AND IS THE PROPERTY OF BUILDER BOY INC. AS A CAD SERVICES. IT IS FURNISHED FOR CONTRACT DOCUMENT PURPOSE ONLY, AND ANY USE OR REPRODUCTION WITHOUT WRITTEN PERMISSION OF THIS COMPANY IS PROHIBITED. RIGHTS OF DESIGN AND INVENTION ARE EXPRESSLY RESERVED.

25

ENVIR SAKIRI
Lot 5 @ Hills of Huntsville
Lake City, Florida 32055

COLUMBIA COUNTY BUILDING DEPARTMENT
Received for FILE COPY
Code Compliance
PLANS EXAMINER

PROJECT 105-07
Ownder Build
New Construction

SHEET-DESC

Floor Plans
3/16" = 1'-0"

Date: 11/05/09

DRAWN BY:
David A. Johnson

Revised:

FILENAME:
f:builderboy/sakary

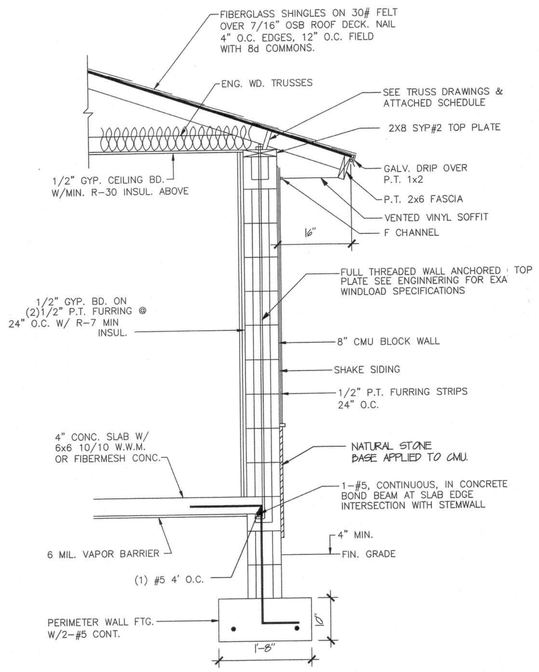

WALL SECTION

SCALE: N.T.S

NOTES:
ENGINEERS STRUCTURAL CRITERIA WILL OVERRIDE SHOWN DETAILS. FOR STRUCTURAL AND STRAPPING INFORMATION, REFER TO STRUCTURAL ENGINEERING SHEETS.

DIMENSIONS, HEIGHTS AND SITE ELEVATIONS ARE APPROXIMATE AND SUBJECT TO FIELD CONDITIONS. CONTRACTOR TO VERIFY BEFORE COMMENCEMENT

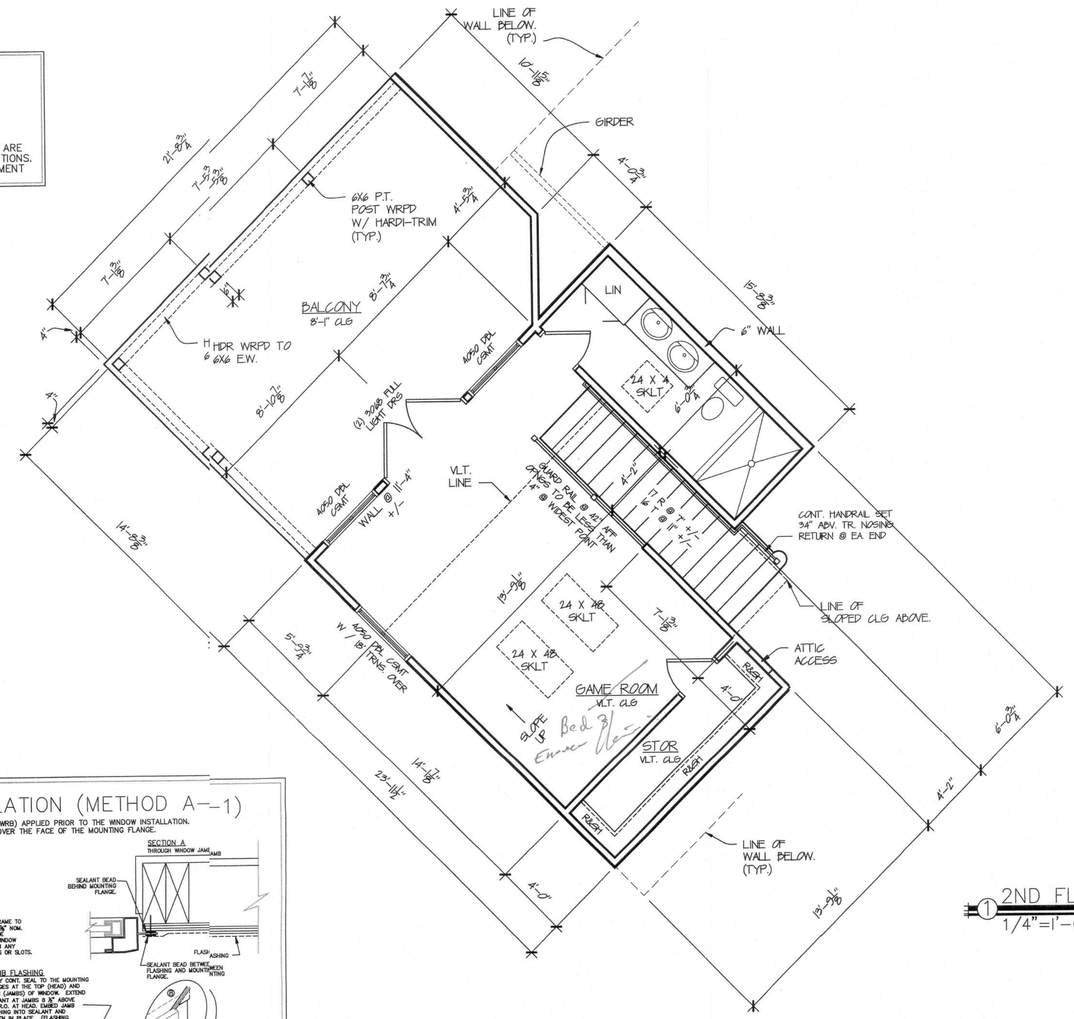

2ND FLOOR PLAN

1/4"=1'-0"

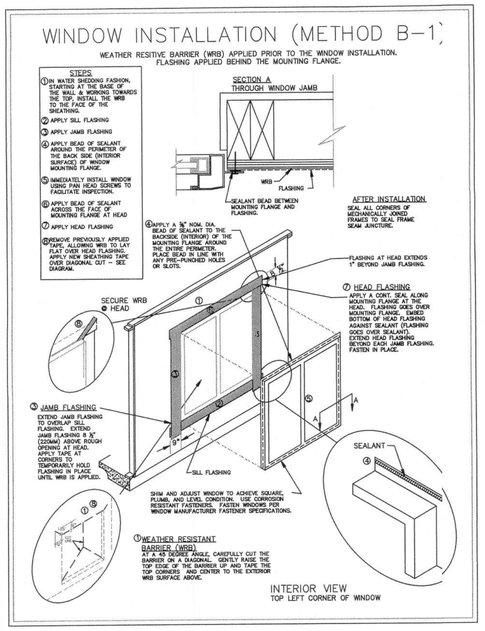

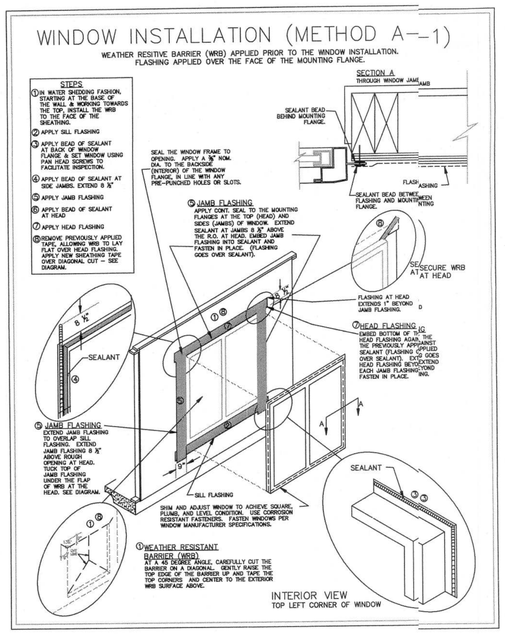

Builder Boy Inc.

Design Management

7855-803 Argyle Forest Blvd
Jacksonville, Fl 32244
Phone 904-334-4653

THIS DRAWING IS AN INSTRUMENT OF SERVICE AND IS THE PROPERTY OF BUILDERBOY INC. AND ANY CONTRACT DOCUMENT PURPOSE ONLY, AND ANY USE OR REPRODUCTION WITHOUT THE EXPRESSED WRITTEN PERMISSION OF BUILDERBOY INC. IS PROHIBITED. ALL RIGHTS OF DESIGN AND INVENTION ARE EXPRESSLY

ENVIR SAKIRI
Lot 5 @ Hills of Huntsville
Lake City, Florida 32055

PROJECT 105-07
Ownder Build
New Construction

SHEET-DESC

Floor Plans
SCALE: AS NOTED

Date: 11/05/09

DRAWN BY:
David A. Johnson

Revised:

FILENAME:
f:builderboy/salary

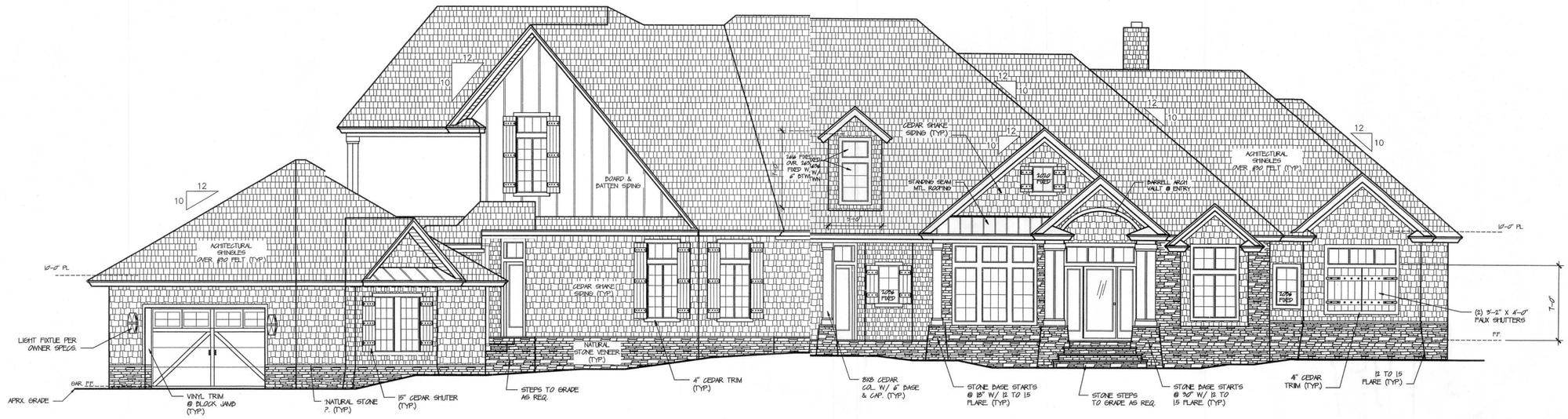

1 FRONT ELEVATON
3/16" 1'-0"

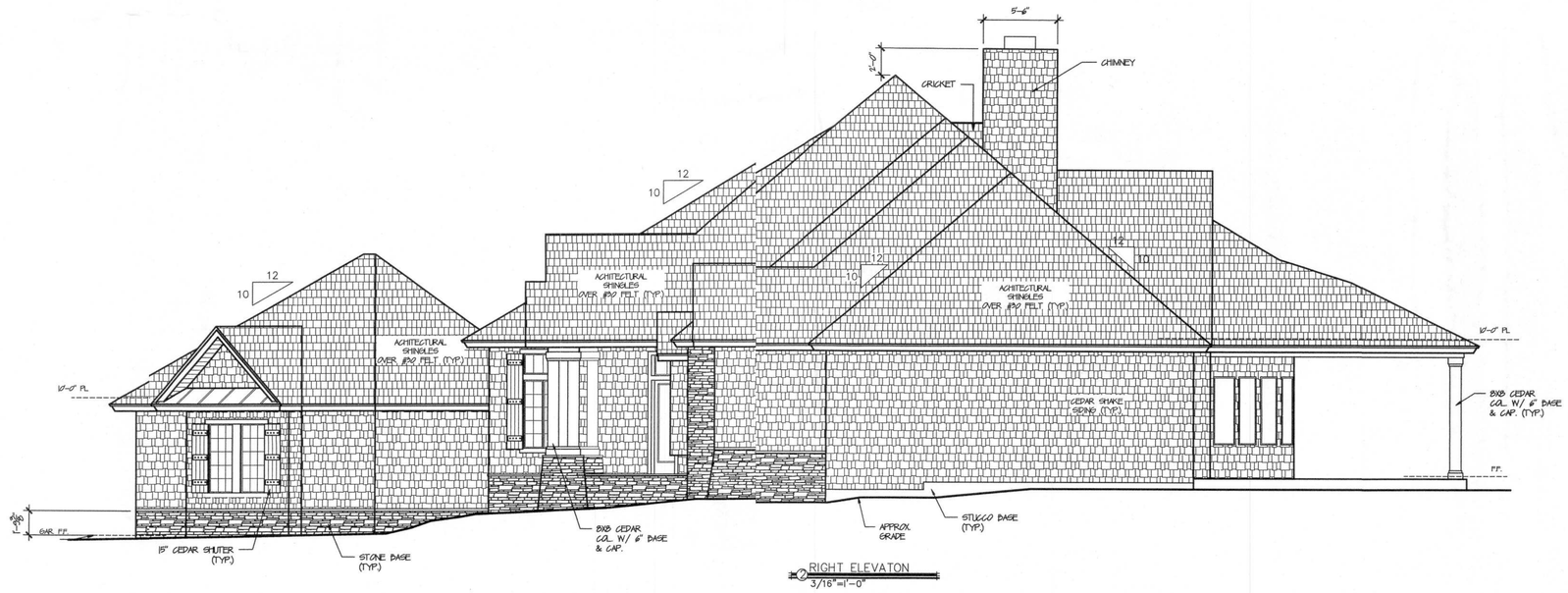

2 RIGHT ELEVATON
3/16"=1'-0"

Builder Boy Inc.

Design Management

7855-803 Argyle Forest Blvd
Jacksonville, Fl 32244
Phone 904-334-4653

THIS DRAWING IS AN INSTRUMENT OF SERVICE AND IS PROPERTY OF BUILDER BOY INC. CONTRACT CAD SERVICES. IT IS FURNISHED FOR CONTRACT DOCUMENT PURPOSE ONLY, AND ANY USE OR REPRODUCTION WITHOUT THE EXPRESSED WRITTEN PERMISSION OF BUILDER BOY INC. ARE RESERVED. RIGHTS OF DESIGN AND INVENTION ARE EXPRESSLY

ENVIR SAKIRI
Lot 5 @ Hills of Huntsville
Lake City, Florida 32055

PROJECT 105-07
Ownder Build
New Construction

SHEET-DESC

Elevations
1/4" = 3/16

Date: 11/05/09

DRAWN BY:
David A. Johnson

Revised:

FILENAME:
f:builderboy/sakary

REAR ELEVATON
3/16"=1'-0"

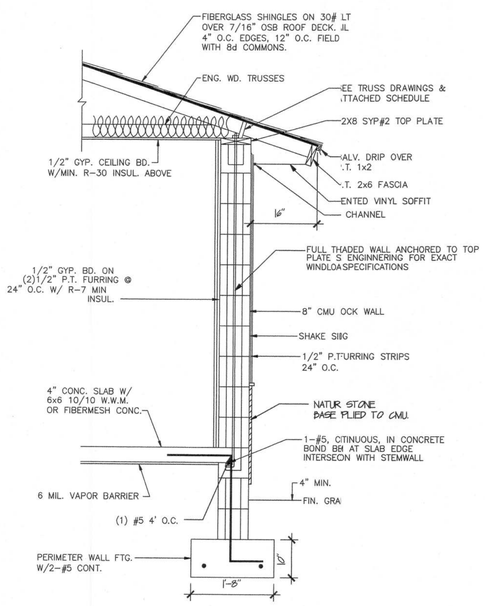

WALL SECTION
SCALE: N.T.S

Builder Boy Inc.

Design Management

7855-803 Argyle Forest Blvd
Jacksonville, Fl 32244
Phone 904-334-4653

THIS DRAWING IS AN INSTRUMENT OF SERVICE AND IS PROPERTY OF BUILDER BOY INC. CAD SERVICES. IT IS FURNISHED FOR CONTRACT DOCUMENT PURPOSE ONLY, AND ANY USE OR REPRODUCTION WITHOUT THE EXPRESSED WRITTEN CONSENT OF THE COMPANY IS PROHIBITED. ALL RIGHTS OF DESIGN AND INVENTION ARE EXPRESSLY

ENVIR SAKIRI
Lot 5 @ Hills of Huntsville
Lake City, Florida 32055

PROJECT 105-07
Ownder Build
New Construction

SHEET-DESC

Elevations SHEET 2
1/4" = 3/16

Date: 11/05/09

DRAWN BY:
David A. Johnson

Revised:

FILENAME:
f:builderboy/sakary

Builder Boy Inc.

Design Management

7855-803 Argyle Forest Blvd
Jacksonville, Fl 32244
Phone 904-334-4653

THIS DRAWING IS AN INSTRUMENT OF SERVICE AND THE PROPERTY OF BUILDERBOY INC. AND CAD SERVICES. IT IS FURNISHED FOR CONTRACT DOCUMENT PURPOSE ONLY, AND ANY USE OR REPRODUCTION WITHOUT THE EXPRESSED WRITTEN PERMISSION OF THIS COMPANYIS PROHIBITED. ALL RIGHTS OF DESIGN AND INVENTION ARE EXPRESSLY

ENVIR SAKIRI
Lot 5 @ Hills of Huntsville
Lake City, Florida 32055

PROJECT 105-47
Owner Build
New Construction

SHEET-DESC
Roof Plan
3/16" = 1'-0"

Date: 11/05/09

DRAWN BY:
David A. Johnson

Revised:

FILENAME:
f:builderboy/sakar

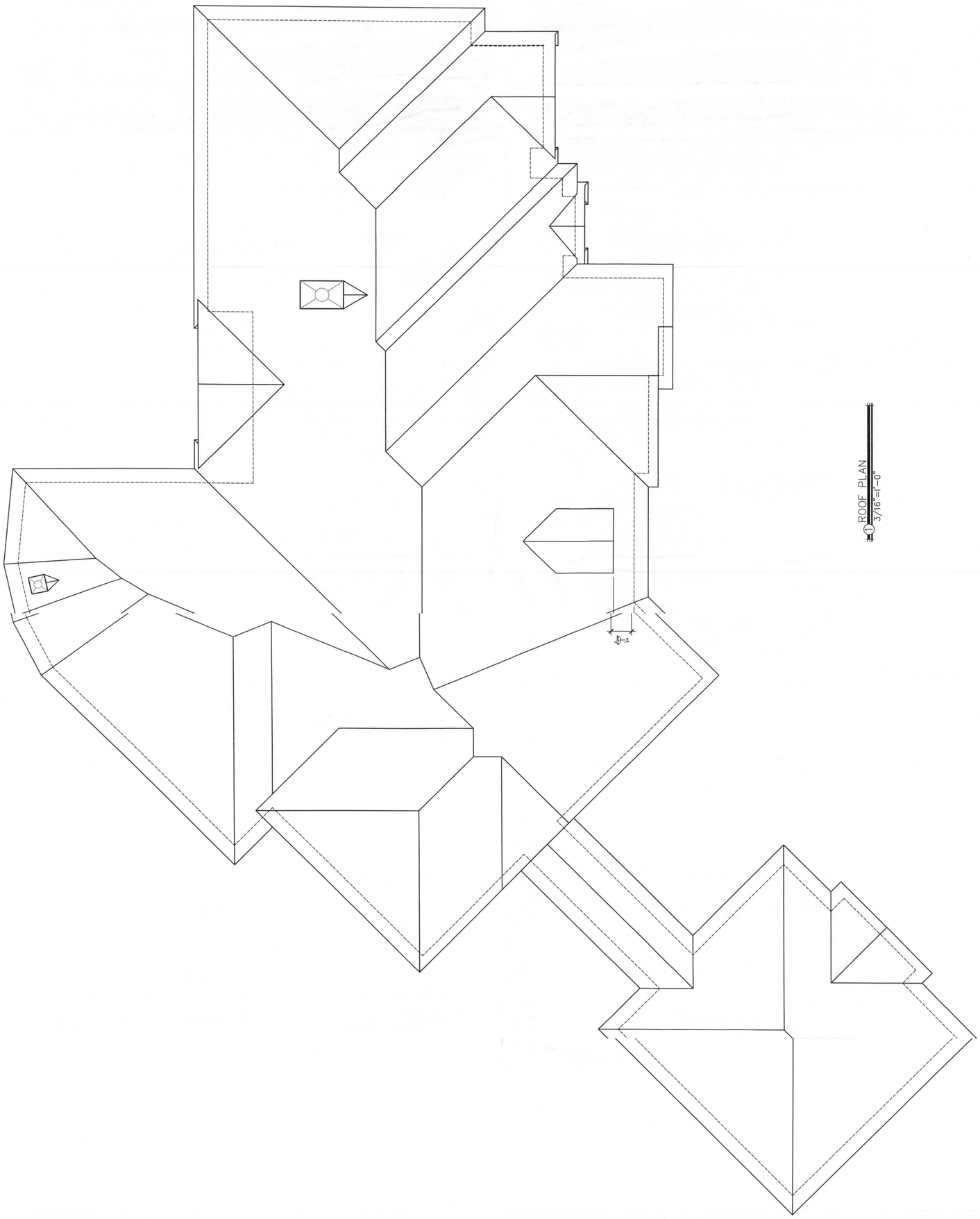

1 ROOF PLAN
3/16"=1'-0"

Builder Boy Inc.

Design Management

7855-803 Argyle Forest Blvd
Jacksonville, Fl 32244
Phone 904-334-4653

THIS DRAWING IS AN INSTRUMENT OF SERVICE AND THE PROPERTY OF BUILDERBOY INC. AND CAD SERVICES. IT IS FURNISHED FOR CONTRACT DOCUMENT PURPOSE ONLY, AND ANY USE OR REPRODUCTION WITHOUT THE EXPRESSED WRITTEN PERMISSION OF THIS COMPANYIS PROHIBITED. ALL RIGHTS OF DESIGN AND INVENTION ARE EXPRESSLY

ENVIR SAKIRI
Lot 5 @ Hills of Huntsville
Lake City, Florida 32055

PROJECT 105-07
Ownder Build
New Construction

SHEET-DESC
Foundation
3/16" = 1'-0"

Date: 11/05/09

DRAWN BY:
David A. Johnson

Revised:

FILENAME:
f:builderboy/sakary

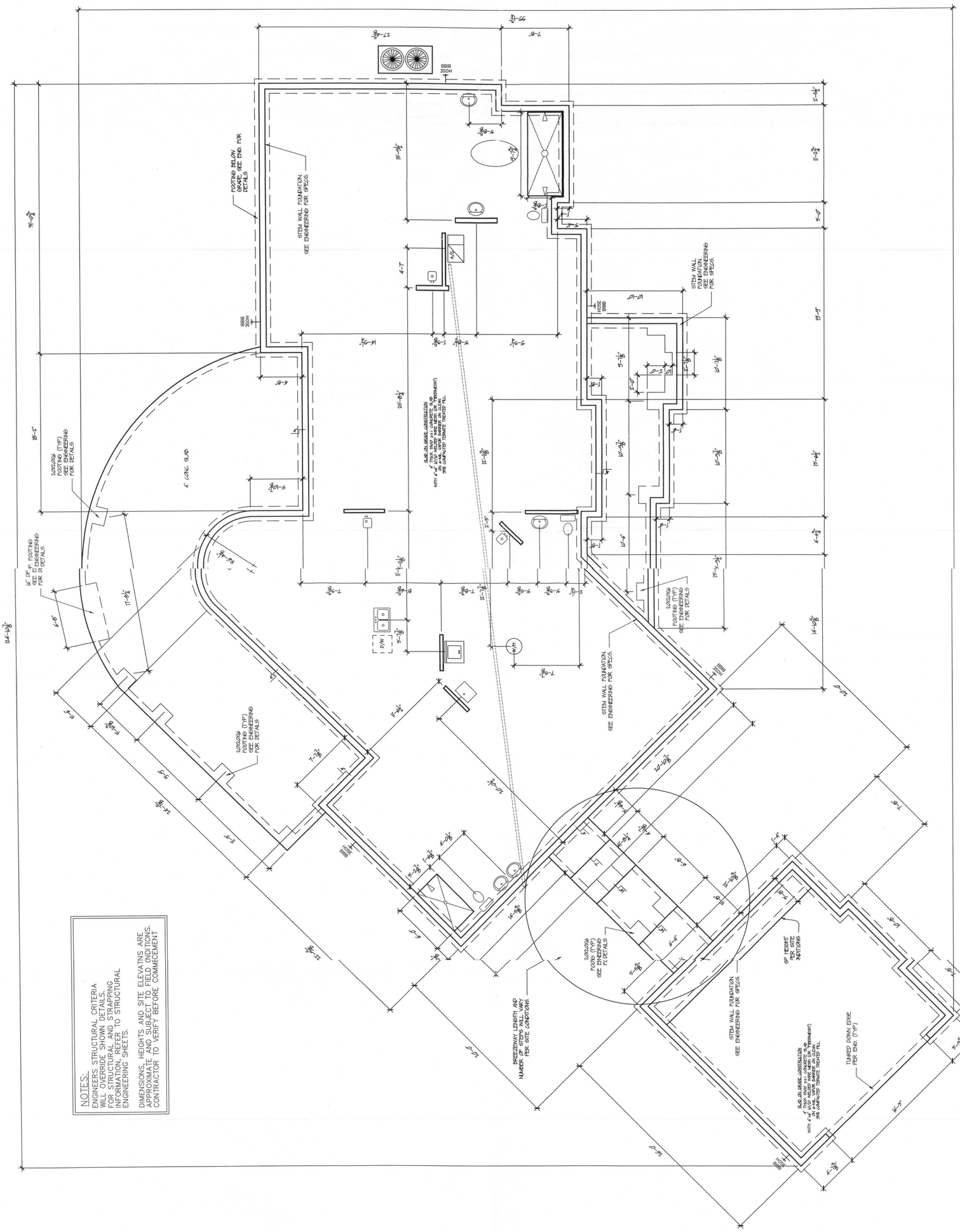

MATERIALS

1. f'c 8" precast lintel = 3500 psi
2. f'c prestressed lintel = 6000 psi
3. Grout per ASTM C476 f'c = 3000 psi w/ maximum 3/8 inch aggregate & 8 to 11 inch slump
4. Concrete Masonry Units (CMU) per ASTM C90 w/minimum net area compressive strength = 1900 psi
5. Rebar per ASTM A615 grade 60
6. Prestressing strand per ASTM A416 grade 270 low relaxation
7. Mortar per ASTM C270 type M or S

GENERAL NOTES

1. Provide full mortar bed and head joints.
2. Shore filled lintels as required.
3. Installation of lintel must comply with the architectural and/or structural documents.
4. U-Lintels are manufactured with 5 1/2" long notches at the ends to accomodate vertical cell reinforcing and grouting.
5. All lintels meet or exceed L/360 deflection, except lintels 17'-4" and longer with a nominal height of 8" meet or exceed L/180 deflection.
6. Bottom field added rebar to be located at the bottom of the lintel cavity.
7. 7/32" diameter wire stirrups are welded to the bottom steel for mechanical anchorage.
8. Cast-in-place concrete may be provided in composite lintel in lieu of concrete masonry units.

9. Safe load rating based on rational design analysis per ACI 318 and ACI 530
10. Product Approvals: Miami-Dade County, Florida No. 03-0606.05
11. The exterior surface of lintels installed in exterior concrete masonry walls shall have a coating of stucco applied in accordance with ASTM C-296 or other approved coating.
12. Lintels loaded simultaneously with vertical (gravity or uplift) and horizontal (lateral) loads should be checked for the combined loading with the following equation:

$$\frac{\text{Applied vertical load}}{\text{Safe vertical load}} + \frac{\text{Applied horizontal load}}{\text{Safe horizontal load}} \leq 1.0$$

13. Additional lateral load capacity can be obtained by the designer by providing additional reinforced concrete masonry above the lintel. See detail at right:

TYPE DESIGNATION

8F16-1B/1T-4'-0"

- F = FILLED WITH GROUT / U = UNFILLED / S = SOLID
- QUANTITY OF #5 FIELD ADDED REBAR AT BOTTOM OF LINTEL CAVITY
- NOMINAL WIDTH
- NOMINAL HEIGHT
- QUANTITY OF #5 FIELD ADDED REBAR AT TOP
- LENGTH

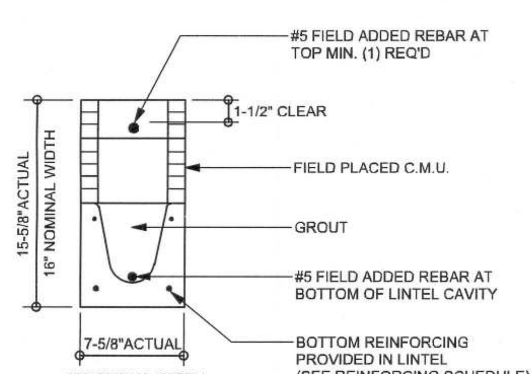

SAFE LOAD TABLE NOTES

1. All values based on minimum 4 inch nominal bearing.
Exception: Safe loads for unfilled lintels must be reduced by 20% if bearing length is less than 6 1/2 inches.
2. N.R. = Not Rated
3. Safe loads are superimposed allowable loads.
4. Safe loads based on grade 40 or grade 60 field rebar.
5. One #7 rebar may be substituted for two #5 rebars in 8" lintels only
6. The designer may evaluate concentrated loads from the safe load tables by calculating the maximum resisting moment and shear at d-away from face of support.

7. For composite lintel heights not shown, use safe load from next lower height shown.
8. For lintels lengths not shown, use safe load from next longest length shown
9. All safe loads in units of pounds per linear foot
10. All safe loads based on simply supported span.
11. The number in the the parenthesis indicates the percent reduction for grade 40 field added rebar.
Example 7'-6" lintel type 8F32-1B safe gravity load = 6472\H0.0469;(15)\H0.0781; w/ 15% reduction 6472 ⇒ (.85) = 5501 plf

SAFE GRAVITY LOADS FOR 8" PRECAST & PRESTRESSED U-LINTELS

CAST-CRETE — SAFE LOAD - POUNDS PER LINEAL FOOT

LENGTH			8U8	8F8-0B / 8F8-1B	8F12-0B / 8F12-1B	8F16-0B / 8F16-1B	8F20-0B / 8F20-1B	8F24	8F28-0B / 8F28-1B	8F32-0B / 8F32-1B
2'-10"	(34")	PRECAST	2231	3069	4605	6113	7547	897	10394	11809
				3069	4605	6113	7547	897	10394	11809
3'-6"	(42")	PRECAST	2231	3069	3719	5163	6607	805	9502	10951
				3069	4605	6113	7547	897	10394	11809
4'-0"	(48")	PRECAST	1966	2561	2751	3820	4890	59	7034	8107
				2693	4605	6113	7547	897	10394	11809
4'-6"	(54")	PRECAST	1599	1969	2110	2931	3753	457	5400	6224
				2189	4375	6113	7547 (7)	867	10294	11809
5'-4"	(64")	PRECAST	1217	1349	1438	1999	2560	31	3686	4249
				1663	3090	5365	7547(36)	734	8733 (19)	10127(19)
5'-10"	(70")	PRECAST	1062	1105	1173	1631	2090	254	3009	3470
				1451	2622	4360	7168 (45)	603	7181 (19)	8328 (20)
6'-6"	(78")	PRECAST	908	1238	2177	3480	3031	370	4383	5061
				1238	2177	3480	5381	838	10394(37)	8825 (14)
7'-6"	(90")	PRECAST	743	1011	1729	2632	2205	269	3191	3685
				1011	1729	2661	3898	561	8467(44)	6472 (15)
9'-4"	(112")	PRECAST	554	699	1160	1625	2564	348	2818	3302
				752	1245	1843	2564	348	4705(37)	6390(47)
10'-6"	(126")	PRECAST	475	535	890	1247	2093	277	2163	2536
				643	1052	1533	2093	271	3643 (38)	4754 (45)
11'-4"	(136")	PRECAST	362	582	945	1366	1846	242	3127	4006
				582	945	1366	1846	242	3127	4006
12'-0"	(144")	PRECAST	337	540	873	1254	1684	21	2805	3552
				540	873	1254	1684	21	2805	3552
13'-4"	(160")	PRECAST	296	471	755	1075	1428	183	2316	2883
				471	755	1075	1428	183	2316	2883
14'-0"	(168")	PRECAST	279	424	706	1002	1326	169	2127	2630
				442	706	1002	1326	169	2127	2630
14'-8"	(176")	PRESTRESSED	N.R.	NR	NR	NR	NR	NR	NR	NR
				458	783	1370	1902	224	2517	2712
15'-4"	(184")	PRESTRESSED	N.R.	NR	NR	NR	NR	NR	NR	NR
				412	710	1250	1733	205	2320	2513
17'-4"	(208")	PRESTRESSED	N.R.	NR	NR	NR	NR	NR	NR	NR
				300	536	950	1326	160	1849	2047
19'-4"	(232")	PRESTRESSED	N.R.	NR	NR	NR	NR	NR	NR	NR
				235	418	750	1037	128	1515	1716
21'-4"	(256")	PRESTRESSED	N.R.	NR	NR	NR	NR	NR	NR	NR
				180	340	598	845	11	1359	1468
22'-0"	(264")	PRESTRESSED	N.R.	NR	NR	NR	NR	NR	NR	NR
				165	315	550	784	104	1285	1399
24'-0"	(288")	PRESTRESSED	N.R.	NR	NR	NR	NR	NR	NR	NR
				129	250	450	654	88	1092	1222

SAFE UPLIFT LOADS FOR 8" PRECAST & PRESTRESSED U-LINTELS

CAST-CRETE — SAFE LOAD - POUNDS PER LINEAR FOOT

LENGTH			8F8-1T / 8F8-2T	8F12-1T / 8F12-2T	8F16-1T / 8F16-2T	8F20-1T / 8F20-2T	8F24-1T / 8F24-2T	8F28	8F32-1T / 8F32-2T
2'-10"	(34")	PRECAST	1972	3173	4460	5747	7034	83	9608
			1972	3173	4460	5747	7034	83	9608
3'-6"	(42")	PRECAST	1569	2524	3547	4569	5591	661	7636
			1569	2524	3547	4569	5591	661	7636
4'-0"	(48")	PRECAST	1363	2192	3079	3966	4853	574	6627
			1363	2192	3079	3966	4853	574	6627
4'-6"	(54")	PRECAST	1207	1940	2724	3508	4292	507	5861
			1207	1940	2724	3508	4292	507	5861
5'-4"	(64")	PRECAST	1016	1632	2290	2949	3607	426	4924
			1016	1632	2290	2949	3607	426	4924
5'-10"	(70")	PRECAST	909	1492	2093	2694	3295	389	4498
			929	1492	2093	2694	3295	389	4498
6'-6"	(78")	PRECAST	835 (12)	1340	1880	2419	2959	349	4038
			835	1340	1880	2419	2959	349	4038
7'-6"	(90")	PRECAST	727 (23)	1021	1634 (12)	2102 (11)	2571 (10)	303	3508 (9)
			727	1166	1634	2102	2571	303	3508
9'-4"	(112")	PRECAST	591	680	1133 (15)	1471 (15)	1811 (15)	215	2494 (15)
			591	851	1326	1705	2084	246	2842
10'-6"	(126")	PRECAST	530	552	914 (15)	1185 (15)	1458 (15)	173	2007 (15)
			530	686	1183	1526	1865	220	2544
11'-4"	(136")	PRECAST	474	485	798 (15)	1034 (15)	1272 (15)	151	1749 (15)
			494	599	1028	1422	1738	205	2369
12'-0"	(144")	PRECAST	470 (9)	441	723 (14)	936 (14)	1151 (15)	136	1582 (15)
			470	543	928	1349	1649	194	2247
13'-4"	(160")	PRECAST	418 (15)	373	606 (14)	783 (14)	962 (14)	114	1321 (14)
			428	455	770	1145	1444	171	1993
14'-0"	(168")	PRECAST	384 (15)	346	559 (14)	723 (14)	887 (14)	105	1218 (14)
			410	420	709	1050	1434 (8)	169	1954 (7)
14'-8"	(176")	PRESTRESSED	239	323	519 (13)	671 (13)	823 (13)	97	1129 (14)
			246	390	655	968	1324 (8)	162	1874 (11)
15'-4"	(184")	PRESTRESSED	224	302	485 (13)	626 (13)	767 (13)	90	1052 (13)
			230	364	609	897	1224 (8)	156	1801 (14)
17'-4"	(208")	PRESTRESSED	187	255	404 (12)	520 (12)	637 (12)	75	872 (12)
			192	303	500	732	993 (8)	126	1470 (14)
19'-4"	(232")	PRESTRESSED	162	222	347 (11)	446 (11)	546 (12)	64	746 (12)
			166	261	424	616	831 (8)	105	1225 (14)
21'-4"	(256")	PRESTRESSED	142	198	306 (11)	393 (11)	480 (11)	56	654 (11)
			142	230	369	531	713 (7)	90	1046 (13)
22'-0"	(264")	PRESTRESSED	137	192	295 (10)	378 (11)	461 (10)	54	629 (11)
			137	221	354	508	681 (7)	86	997 (13)
24'-0"	(288")	PRESTRESSED	124	175	267 (10)	341 (10)	416 (10)	49	566 (10)
			124	200	316	450	600 (7)	75	875 (13)

SAFE GRAVITY LOADS FOR 8" PRECAST w/ 2" RECESS DOOR-LINTELS

CAST-CRETE — SAFE LOAD - POUNDS PER LINEAR FOOT

LENGTH			8RU6	8RF6-0B / 8RF6-1B	8RF10-0B / 8RF10-1B	8RF14-0B / 8RF14-1B	8RF18-0B / 8RF18-1B	8RF22	8RF26-0B / 8RF26-1B	8RF30-0B / 8RF30-1B
4'-4"	(52")	PRECAST	1635	1749	3355	3280	4349	542	6493	7567
				1891	3699	5206	6639	806	9479	10893
4'-6"	(54")	PRECAST	1494	1596	3063	2992	3968	494	5924	6904
				1756	3699	5206	6639	806	9479	10893
5'-8"	(68")	PRECAST	866	920	1770	1716	2277	283	3402	3966
				1167	2481	4567	6389	806	7917 (19)	9311 (19)
5'-10"	(70")	PRECAST	810	859	1653	1600	2124	264	3174	3700
				1113	2342	4242	6639 (10)	806	7402 (19)	8706 (19)
6'-8"	(80")	PRECAST	797	901	1825	3120	5048	774	9448	7360
				901	1825	3120	5048	791	9479	10893 (32)
7'-6"	(90")	PRECAST	669	755	1490	2459	3776	574	7239	5623
				755	1490	2459	3776	574	8998 (19)	10893 (48)
9'-8"	(116")	PRECAST	411	466	999	1568	2253	312	4091	3146
				526	999	1568	2253	312	4150	5891 (47)

SAFE UPLIFT LOADS FOR 8" PRECAST w/ 2" RECESS DOOR U-LINTELS

CAST-CRETE — SAFE LOAD - POUNDS PER LINEAR FOOT

LENGTH			8RF6-1T / 8RF6-2T	8RF10-1T / 8RF10-2T	8RF14-1T / 8RF14-2T	8RF18-1T / 8RF18-2T	8RF22-1T / 8RF22-2T	8RF26	8RF30-1T / 8RF30-2T
4'-4"	(52")	PRECAST	905	1748	2635	3522	4409	529	6183
			905	1748	2635	3522	4409	529	6183
4'-6"	(54")	PRECAST	867	1675	2525	3374	4224	5074	5924
			867	1675	2525	3374	4224	5074	5924
5'-8"	(68")	PRECAST	675	1301	1960	2618	3277	393	4594
			675	1301	1960	2618	3277	393	4594
5'-10"	(70")	PRECAST	655	1262	1900	2538	3176	381	4453
			655	1262	1900	2538	3176	381	4453
6'-8"	(80")	PRECAST	570	1012	1651	2204	2758	331	3865
			570	1097	1651	2204	2758	331	3865
7'-6"	(90")	PRECAST	506	797	1462 (8)	1952 (7)	2442 (6)	293	3257
			506	967	1462	1952	2442	293	3421
9'-8"	(116")	PRECAST	395	491	931 (12)	1301 (15)	1640 (15)	1980	2322 (16)
			395	589	1135	1514	1893	2272	2652

EXTERIOR WALL STUD TABLE FOR SPF #2 STUDS

(1) 2x4 @ 16" OC	TO 10'-6" STUD HEIGHT
(1) 2x4 @ 12" OC	TO 11'-7" STUD HEIGHT
(1) 2x6 @ 16" OC	TO 16'-10" STUD HEIGHT
(1) 2x6 @ 12" OC	TO 18'-7" STUD HEIGHT

THIS STUD HEIGHT TABLE IS PER WFCM 2001, TABLE 3.20B, EXTERIOR LOAD BEARING & NON LOAD BEARING STUD LENGTHS RESISTING INTERIOR ZONE WINDLOADS 110 MPH EXPOSURE C. STUD SPACINGS SHALL BE MULTIPLIED BY 0.85 FOR FRAMING LOCATED WITHIN 4 FEET OF CORNERS FOR END ZONE LOADING. EXAMPLE 16" O.C. x 0.85 = 13.6" O.C.

GRADE & SPECIES TABLE

		Fb (psi)	E (10^6 psi)
2x8	SYP #2	1200	1.6
2x10	SYP #2	1050	1.6
2x12	SYP #2	975	1.6
GLB	24F-V3 SP	2400	1.8
LSL	TIMBERSTRAND	1700	1.7
LVL	MICROLAM	2900	2.0
PSL	PARALAM	2900	2.0

DOOR & WINDOW BUCK ATTACHMENT

TAPCON IN FACE OF CMU
2 1/2" MIN. EDGE DISTANCE
1 1/4" MIN. EMBEDMENT
3" MIN. SPACING

WINDOWS & DOORS UP TO 6'X8'

3/16" TAPCONS @ 2' O.C.
1/4" TAPCONS @ 3' O.C.

WINDOWS & DOORS UP TO 8'X12'

3/16" TAPCONS @ 16" O.C.
1/4" TAPCONS @ 24" O.C.

SLIDERS UP TO 8'HX20'W

3/16" TAPCONS @ 12" O.C.
1/4" TAPCONS @ 18" O.C.

GARAGE DOOR UP TO 10'W

(2) 3/16" TAPCONS & 16" O.C.
(2) 1/4" TAPCONS & 24" O.C.

GARAGE DOOR UP TO 18'W

(2) 3/16" TAPCONS & 8" O.C.
(2) 1/4" TAPCONS & 12" O.C.

WOOD ANCHOR TABLE

OBTAIN UPLIFT REQUIREMENTS FROM TRUSS MANUFACTURER'S ENGINEERING

UPLIFT LBS. SYP	UPLIFT LBS. SPF	TRUSS CONNECTOR*	TO PLATES	TO RAFTER/TRUSS	TO STUDS
< 420	< 245	H5A	3-8d	3-8d	
< 455	< 265	H5	4-8d	4-8d	
< 360	< 235	H4	4-8d	4-8d	
< 455	< 320	H3	4-8d	4-8d	
< 415	< 365	H2.5	5-8d	5-8d	
< 600	< 535	H2.5A	5-8d	5-8d	
< 950	< 820	H6	8-8d	8-8d	
< 745	< 565	H8	5-10d, 1 1/2"	5-10d, 1 1/2"	
< 1465	< 1050	H14-1	13-8d	12-8d, 1 1/2"	
< 1465	< 1050	H14-2	15-8d	12-8d, 1 1/2"	
< 990	< 850	H10-1	8-8d, 1 1/2"	8-8d, 1 1/2"	
< 760	< 655	H10-2	6-10d	6-10d	
< 1470	< 1265	H16-1	10-10d, 1 1/2"	2-10d, 1 1/2"	
< 1470	< 1265	H16-2	10-10d, 1 1/2"	2-10d, 1 1/2"	
< 1000	< 860	MTS24C	7-10d 1 1/2"	7-10d 1 1/2"	
< 1450	< 1245	HTS24	12-10d 1 1/2"	12-10d 1 1/2"	
< 2900	< 2490	2 - HTS24			
< 2050	< 1785	LGT2	14 -16d	14 -16d	
		HEAVY GIRDER TIEDOWNS*			TO FOUNDATION
< 3965	< 3330	MGT		22 -10d	1-5/8" THREADED ROD 12" EMBEDMENT
< 10980	< 6485	HGT-2		16 -10d	2-5/8" THREADED ROD 12" EMBEDMENT
< 10530	< 9035	HGT-3		16 -10d	2-5/8" THREADED ROD 12" EMBEDMENT
< 9250	< 9250	HGT-4		16 -10d	2-5/8" THREADED ROD 12" EMBEDMENT
		STUD STRAP CONNECTOR*			TO STUDS
< 435	< 435	SSP DOUBLE TOP PLATE	3 -10d		4 -10d
< 455	< 420	SSP SINGLE SILL PLATE	1 -10d		4 -10d
< 825	< 825	DSP DOUBLE TOP PLATE	6 -10d		8 -10d
< 825	< 600	DSP SINGLE SILL PLATE	2 -10d		8 -10d
< 885	< 760	SP4			6-10d, 1 1/2"
< 1240	< 1065	SPH4			10-10d, 1 1/2"
< 885	< 760	SP6			6-10d, 1 1/2"
< 1240	< 1065	SPH6			10-10d, 1 1/2"
< 1235	< 1165	LSTA18	14-10d		
< 1235	< 1235	LSTA21	16-10d		
< 1030	< 1030	CS20	18-8d		
< 1705	< 1705	CS16	28-8d		
		STUD ANCHORS*	TO STUDS		TO FOUNDATION
< 1350	< 1305	LTT19	8-16d		1/2" AB
< 2310	< 2310	LTTI31	18-10d, 1 1/2"		1/2" AB
< 2775	< 2570	HD2A	2-5/8" BOLTS		5/8" AB
< 4175	< 3695	HTT16	18 - 16d		5/8" AB
< 1400	< 1400	PAHD42	16-16d		
< 3335	< 3335	HPAHD22	16-16d		
< 2200	< 2200	ABU44	12-16d		1/2" AB
< 2300	< 2300	ABU66	12-16d		1/2" AB
< 2320	< 2320	ABU88	18 - 16d		2-5/8" AB

MASONRY TRUSS ANCHOR TABLE

OBTAIN UPLIFT REQUIREMENTS FROM TRUSS MANUFACTURER'S ENGINEERING

UPLIFT LBS.	TRUSS CONNECTOR MASONRY *	
< 1205	TA22	10-10d x 1 1/2"
< 1605	TA22	11-10d
< 860	MTSM20	4 - 1/4"x2 1/4" TITEN IN BLOCK 7 - 10d IN TRUSS
< 1175	HTSM20	4 - 1/4"x2 1/4" TITEN IN BLOCK 10 - 10d IN TRUSS
< 1040	META20	7-10d, 1 1/2"
< 1490	META20	10-10d, 1 1/2"
< 1780	HETA20	7-16d
< 1780	LGT2	7 - 1/4"x2 1/4" TITEN IN BLOCK 14 - 16d SINKER IN GIRDER
< 2130	HHETA20	17-10d, 1 1/2"
< 2310	HHETA24	21-10d, 1 1/2"
< 3965	MGT	22-10d TO TRUSS 5/8 AB TO WALL 15" EMBEDMENT
< 10980	HGT-2	16-10d TO TRUSS (2) 3/4 AB TO WALL 15" EMBEDMENT
< 10530	HGT-3	16-10d TO TRUSS (2) 3/4 AB TO WALL 15" EMBEDMENT

MASONRY NOTES:

MASONRY CONSTRUCTION AND MATERIALS FOR THIS PROJECT SHALL CONFORM TO ALL REQUIREMENTS OF "SPECIFICATION FOR MASONRY STRUCTURES" (ACI 530.1/ASCE 6/TMS 602). THE CONTRACTOR AND MASON MUST IMMEDIATELY, BEFORE PROCEDING, NOTIFY THE ENGINEER OF ANY CONFLICTS BETWEEN ACI 530.1-02 AND THESE DESIGN DRAWINGS. ANY EXCEPTIONS TO ACI 530.1-02 MUST BE APPROVED BY THE ENGINEER IN WRITING.

	ACI530.1-02 Section	Specific Requirements
1.4A	Compressive strength	8" block bearing walls F'm = 1500 psi
2.1	Mortar	ASTM C 270, Type N, UNO
2.2	Grout	ASTM C 476, admixtures require approval
2.3	CMU standard	ASTM C 90-02, Normal weight, Hollow, medium surface finish, 8"x8"x16" running bond and 12"x12" or 16"x16" column block
2.3	Clay brick standard	ASTM C 216-02, Grade SW, Type FBS, 5.5"x2.75"x11.5"
2.4	Reinforcing bars, #3 - #11	ASTM 615, Grade 60, Fy = 60 ksi, Lap splices min 48 bar dia. (30" for #5)
2.4F	Coating for corrosion protection	Anchors, sheet metal ties completely embedded in mortar or grout, ASTM A525, Class G60, 0.60 oz/ft2 or 304SS
2.4F	Coating for corrosion protection	Joint reinforcement in walls exposed to moisture or wire ties, anchors, sheet metal ties not completely embedded in mortar or grout, ASTM A153, Class B2, 1.50 oz/ft2 or 304SS
3.3.E.2	Pipes, conduits, and accessories	Any not shown on the project drawings require engineering approval.
3.3.E.7	Movement joints	Contractor assumes responsibility for type and location of movement joints if not detailed on project drawings.

GENERAL NOTES:

TRUSSES: TRUSSES SHALL BE DESIGNED BY A FLORIDA LICENSED ENGINEER IN ACCORDANCE WITH THE FBCR 2007. TRUSS ENGINEERING SHALL INCLUDE TRUSS DESIGN, PLACEMENT PLANS, TEMPORARY AND PERMANENT BRACING DETAILS, TRUSS-TO-TRUSS CONNECTIONS, AND UPLIFT AND REACTION LOADS FOR ALL BEARING LOCATIONS. TRUSS ENGINEERING IS THE RESPONSIBILITY OF THE TRUSS MANUFACTURER AND SHALL BE SIGNED & SEALED BY THE MANUFACTURER'S DESIGN ENGINEER. IT IS THE BUILDER'S RESPONSIBILITY VERIFY THE TRUSS DESIGNER FULLY SATISFIED ALL THE ABOVE REQUIREMENTS AND TO SELECT UPLIFT CONNECTIONS BASED ON TRUSS ENGINEERING UPLIFT AND PROVIDE FOOTINGS FOR INTERIOR BEARING WALLS. BUILDER IS TO FURNISH TRUSS ENGINEERING TO WIND LOAD ENGINEER FOR REVIEW OF TRUSS REACTIONS ON THE BUILDING STRUCTURE. STRAP 2X6 RAFTERS WITH MIN UPLIFT CONNECTION 415LB EACH END; 2X8 RAFTERS 700 LB EACH END.

SITE PREPARATION: SITE ANALYSIS AND PREPARATION IS NOT PART OF THIS PLAN

FOUNDATION: CONFIRM THAT THE FOUNDATION DESIGN & SITE CONDITIONS MEET GRAVITY LOAD REQUIREMENTS (ASSUME 1000 PSF BEARING CAPACITY UNLESS VISUAL OBSERVATION OR SOILS TEST PROVES OTHERWISE

CONCRETE: MINIMUM COMPRESSIVE STRENGTH OF CONCRETE AT 28 DAYS, F'c = 3000 PSI.

WELDED WIRE REINFORCED SLAB: 6" x 6" W1.4 x W1.4, FB = 85KSI, WELDED WIRE REINFORCEMENT FABRIC (W.W.M.) CONFORMING TO ASTM A185; LOCATED IN MIDDLE OF THE SLAB; SUPPORTED WITH APPROVED MATERIALS OR SUPPORTS AT SPACINGS NOT TO EXCEED 3'.

FIBER CONCRETE SLAB: CONCRETE SLABS ON GROUND CONTAINING SYNTHETIC FIBER REINFORCEMENT. FIBER LENGTH 1/2 INCH TO 2 INCHES. DOSAGE AMOUNTS FROM 0.75 TO 1.5 POUNDS PER CUBIC YARD PER THE MANUFACTURER'S RECOMMENDATIONS. FIBERS TO COMPLY WITH ASTM C 1116. SUPPLIER TO PROVIDE ASTM C 1116 CERTIFICATION OF COMPLIANCE WHEN REQUESTED BY BUILDING OFFICIAL.

CONTROL JOINTS: WHERE SPECIFIED, SAWN CONTROL JOINTS IN SLAB-ON-GRADE SHALL BE CUT IN ACCORDANCE WITH ACI 302. JOINTS SHALL BE CUT WITHIN 12 HOURS OF SLAB PLACEMENT. THE LENGTH / WIDTH RATIOS OF SLAB AREAS SHALL NOT EXCEED 1.5 AND TYPICAL SPACING OF CUTS TO BE 12FT. DO NOT CUT WWM OR REINFORCING STEEL. (RECOMMENDED LOCATION OF CONTROL JOINTS IS SUBJECT TO OWNER AND CONTRACTOR'S APPROVAL. THE CONTROL JOINTS ARE NOT INTENDED TO PREVENT CRACKS BUT RATHER TO ENCOURAGE THE SLAB TO CRACK ON A GIVEN LINE.)

REBAR: ASTM A 615, GRADE 60, DEFORMED BARS, FY = 60 KSI. ALL LAP SPLICES 40 * DB (25" FOR #5 BARS); UNO. ALL REINFORCEMENT SHALL BE DETAILED AND PLACED IN ACCORDANCE WITH ACI 315-96, U.N.O.

GLULAM BEAMS: GLULAM BEAM, GLB, 24F-V3SP, Fb = 2.4ksi, E = 1800ksi; UNO. SUPPLIER MAY SUPPLY AN ALTERNATE BEAM WITH EQUAL PROPERTIES OR MAY SUBMIT THEIR OWN SIZING CALCS.
ROOF SHEATHING: ALL ROOFS ARE HORIZONTAL DIAPHRAGMS; 7/16" OSB SHEATHING, UNBLOCKED, APPLIED PERPENDICULAR TO FRAMING, OVER A MINIMUM OF 3 FRAMING MEMBERS, WITH PANEL EDGES STAGGERED, FASTENED WITH 8d COMMON NAILS (.131), 6"OC PANEL EDGES, 12"0C INTERMEDIATE MEMBERS, GABLE ENDS AND DIAPHRAGM BOUNDARY; 4"OC, UNO.

STRUCTURAL CONNECTORS: MANUFACTURERS AND PRODUCT NUMBER FOR CONNECTORS, ANCHORS, AND REINFORCEMENT ARE LISTED FOR EXAMPLE NOT ENDORSEMENT. AN EQUIVALENT DEVICE OF THE SAME OR OTHER MANUFACTURER CAN BE SUBSTITUTED FOR ANY DEVICES LISTED IN THE EXAMPLE TABLES AS LONG AS IT MEETS THE REQUIRED LOAD CAPACITIES. MANUFACTURER'S INSTALLATION INSTRUCTIONS MUST BE FOLLOWED TO ACHIEVE RATED LOADS.

ANCHOR BOLTS: A-307 ANCHOR BOLTS WITH MINIMUM EMBEDMENT AS SPECIFIED IN DRAWINGS BUT NO LESS THAN 7" IN CONCRETE OR REINFORCED BOND BEAM OR 15" IN GROUTED CMU.

WASHERS: WASHERS USED WITH 1/2" BOLTS TO BE 2" x 2" x 9/64"; WITH 5/8" BOLTS TO BE 3" x 3" x 9/64"; WITH 3/4" BOLTS TO BE 3" x 3" x 9/64"; WITH 7/8" BOLTS TO BE 3" x 3" x 5/16"; UNO.

NAILS: ALL NAILS ARE COMMON NAILS UNLESS OTHERWISE SPECIFIED OR ACCEPTED BY FBC TEST REPORTS AS HAVING EQUAL STRUCTURAL VALUES.

BUILDER'S RESPONSIBILITY

THE BUILDER AND OWNER ARE RESPONSIBLE FOR THE FOLLOWING, WHICH ARE SPECIFICALLY NOT PART OF THE WIND LOAD ENGINEER'S SCOPE OF WORK.
CONFIRM SITE CONDITIONS, FOUNDATION BEARING CAPACITY, GRADE AND BACKFILL HEIGHT, WIND SPEED AND DEBRIS ZONE, AND FLOOD ZONE.
PROVIDE MATERIALS AND CONSTRUCTION TECHNIQUES, WHICH COMPLY WITH FBCR 2007 REQUIREMENTS FOR THE STATED WIND VELOCITY AND DESIGN PRESSURES.
PROVIDE A CONTINUOUS LOAD PATH FROM TRUSSES TO FOUNDATION. IF YOU BELIEVE THE PLAN OMITS A CONTINUOUS LOAD PATH CONNECTION, CALL THE WIND LOAD ENGINEER IMMEDIATELY.
VERIFY THE TRUSS MANUFACTURER'S SEALED ENGINEERING INCLUDES TRUSS DESIGN, PLACEMENT PLANS, TEMPORARY AND PERMANENT BRACING DETAILS, TRUSS-TO-TRUSS CONNECTIONS, AND UPLIFT AND REACTION LOADS FOR ALL BEARING LOCATIONS.

ROOF SYSTEM DESIGN

THE SEAL ON THESE PLANS FOR COMPLIANCE WITH FBCR 2007, SECTION R301.2.1 IS BASED ON REACTIONS, UPLIFTS, AND BEARING LOCATIONS IN TRUSS ENGINEERING SUBMITTED TO THE WIND LOAD ENGINEER. IT IS THE RESPONSIBILITY OF THE BUILDER TO CHECK ALL DETAILS OF THE COMPLETE ROOF SYSTEM DESIGN SUBMITTED BY THE TRUSS MANUFACTURER AND HAVE IT SIGNED, AND SEALED BY A DESIGN PROFESSIONAL FOR CORRECT APPLICATION OF FBCR 2007 REQUIRED LOADS AND ANY SPECIAL LOADS. THE BUILDER IS RESPONSIBLE TO REVIEW EACH INDIVIDUAL TRUSS MEMBER AND THE TRUSS ROOF SYSTEM AS A WHOLE AND TO PROVIDE RESTRAINT FOR ANY LATERAL BRACING. THE BUILDER SHOULD USE CARE CHECKING THE ROOF DESIGN BECAUSE THE WIND LOAD ENGINEER IS SPECIFICALLY NOT RESPONSIBLE FOR THE TRUSS LAYOUT WHICH WAS CREATED BY THE TRUSS MANUFACTURER AND THE TRUSS DESIGNER ALSO DENIES RESPONSIBILITY FOR THE LAYOUT PER NOTES ON THEIR SEALED TRUSS SHEETS.

DESIGN DATA

WIND LOADS PER FLORIDA BUILDING CODE 2007 RESIDENTIAL, SECTION R301.2.1
(ENCLOSED SIMPLE DIAPHRAGM BUILDINGS WITH FLAT, HIPPED, OR GABLE ROOFS; MEAN ROOF HEIGHT NOT EXCEEDING LEAST HORIZONTAL DIMENSION OR 60 FT; NOT ON UPPER HALF OF HILL OR ESCARPMENT 60FT IN EXP. B, 30FT IN EXP. C AND >10% SLOPE AND UNOBSTRUCTED UPWIND FOR 50x HEIGHT OR 1 MILE WHICHEVER IS LESS.)
BUILDING IS NOT IN THE HIGH VELOCITY HURRICANE ZONE
BUILDING IS NOT IN THE WIND-BORNE DEBRIS REGION
1.) BASIC WIND SPEED = 110 MPH
2.) WIND EXPOSURE = C
3.) WIND IMPORTANCE FACTOR = 1.0
4.) BUILDING CATEGORY = II
5.) ROOF ANGLE = 10-45 DEGREES
6.) MEAN ROOF HEIGHT = <30 FT
7.) INTERNAL PRESSURE COEFFICIENT = N/A (ENCLOSED BUILDING)
8.) COMPONENTS AND CLADDING DESIGN WIND PRESSURES (TABLE R301.2(2))

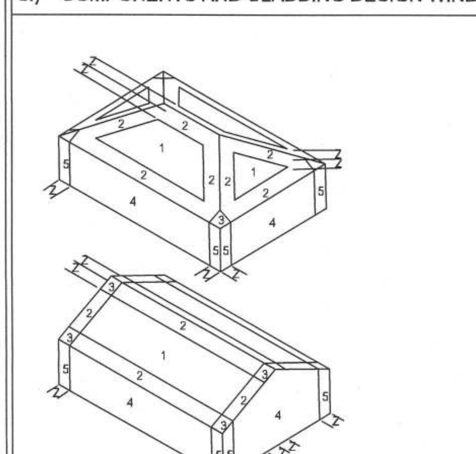

Zone	Effective Wind Area (ft2) 10		100	
1	27.8	-30.5	25.3	-25.3
2	27.8	-35.7	25.3	-30.5
2 O'hg		-56.8		-56.8
3	27.8	-35.7	25.3	-30.5
3 O'hg		-95.6		-59.3
4	30.5	-33.0	25.9	-28.5
5	30.5	-40.7	25.9	-31.6

Doors & Windows Worst Case (Zone 5, 10 ft2)	30.5	-40.7
8x7 Garage Door	27.3	-32.0
16x7 Garage Door	25.9	-29.4

DESIGN LOADS	
FLOOR	40 PSF (ALL OTHER DWELLING ROOMS)
	30 PSF (SLEEPING ROOMS)
	30 PSF (ATTICS WITH STORAGE)
	10 PSF (ATTICS WITHOUT STORAGE, <3:12)
ROOF	20 PSF (FLAT OR <4:12)
	16 PSF (4:12 TO <12:12)
	12 PSF (12:12 AND GREATER)
STAIRS 40 PSF (ONE & TWO FAMILY DWELLINGS)	
SOIL BEARING CAPACITY 1000PSF	
NOT IN FLOOD ZONE (BUILDER TO VERIFY)	

REVISIONS

SOFTPLAN ARCHITECTURAL DESIGN SOFTWARE

WINDLOAD ENGINEER: Mar Disosway, PE No.53915, POB 868, LakeCity, FL 32056, 386-754-5419

DIMENSIONS:
Stated dimensions supercede scaled dimensions. Refer all questios to Mark Disosway, P.E. for resoltion. Do not proceed without clarifiation.

COPYRIGHTS AND PROPERTY RIGHTS:
Mark Disosway, P.E. hereby expressly reserves its common law copyrights ard property right in these instruments of service. This document is not to be reproduced, altered or copied in any form or manner without first the express written permission and consent of Mrk Disosway.

CERTIFICATION: I hereby cetify that I have examined this plan, and that te applicable portions of the plan, relating t wind engineering comply with section R301.2.1 florida building code residential 2007 & 2009 supplements, to the best of my knowledge.

LIMITATION: This design is vlid for one building, at specified location.

MARK DISOSVAY
P.E. 53915

17MAR10

SEAL

Enver Sa:iri
Residence

25 ADDRESS:
Lot 5 Hills of Hunsville S/D
Columbia County Florida

Mark Disoswy P.E.
P.O. Box }68
Lake City, Florila 32056
Phone: (386) 7}4 - 5419
Fax: (386) 26! - 4871

PRINTED DATE:	
March 17, 2010	
DRAWN BY: Evan Beamsley	STRUCTURAL BY: Evan Beamsley
FINALS DATE: 2010-03-17	

JOB NUMBER:
100135

DRAWING NUMBER

S-1

OF 5 SHEETS

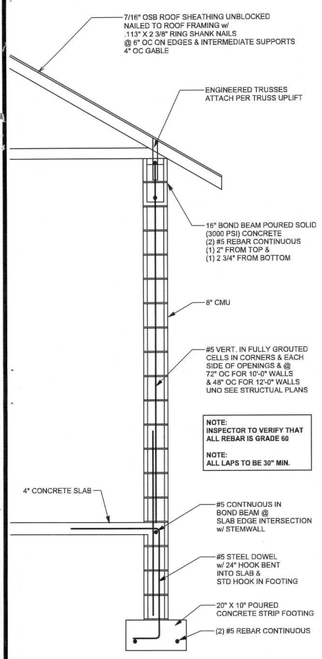

EXTERIOR WALL A-A

ONE STORY CMU

SCALE: 1/2" = 1'-0"

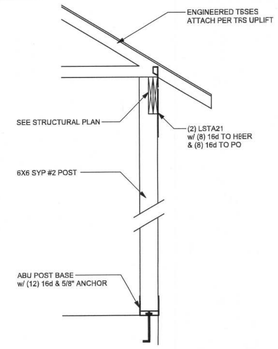

(TYP.) PORCH POST

ONE STORY WOOD

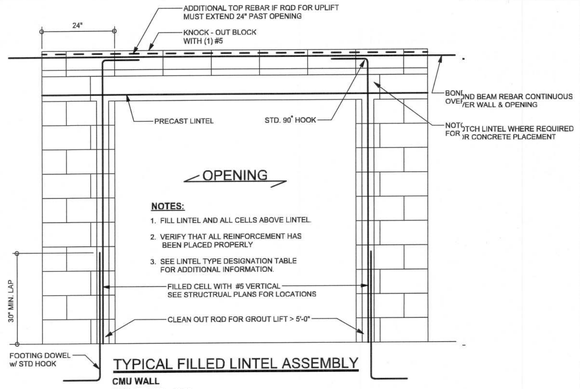

TYPICAL FILLED LINTEL ASSEMBLY

CMU WALL

SCALE: 1/2" = 1'-0"

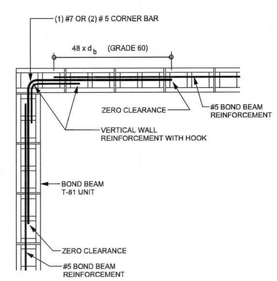

TYPICAL BOND BEAM CORNER

CMU

SCALE: 1/2" = 1'-0"

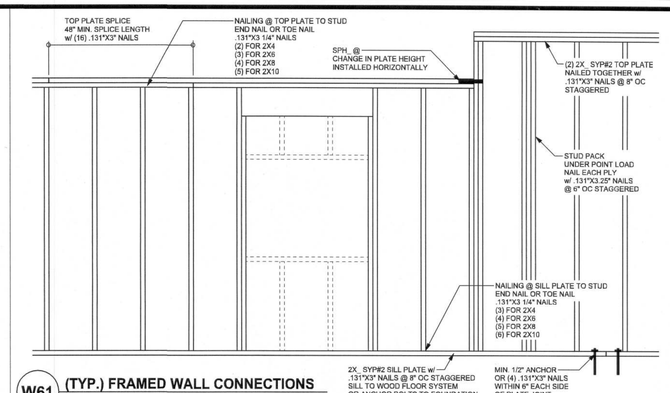

W61 (TYP.) FRAMED WALL CONNECTIONS

ONE STORY WOOD FRAME N.T.S.

REVISIONS

SOFTPLAN ARCHITECTURAL SUCH NOT THAME

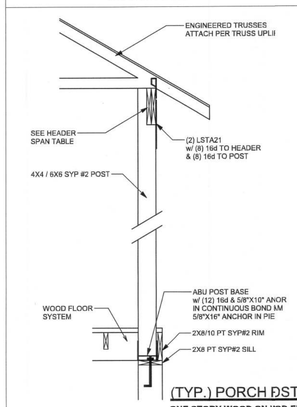

(TYP.) PORCH POST

ONE STORY WOOD ON WOD FLOOR

RAFTER / TRUSS FRAMING TO WALL CONNECTION FOR WIND LOAD																
WIND SPEED		90 MPH			100 MPH			110 MPH			120 MPH			130 MPH		
		REQUIRED CAPACITY OF CONNECTION (LBS)														
TRUSS RAFTER SPACING	ROOF SPAN	U	L	S	U	L	S	U	L	S	U	L	S	U	L	S
12" OC	12'	113	110	48R	157	152	67R	205	184	81R	258	219	97R	315	257	113 R
	16'	135			188			246			310			379		
	20'	157			219			288			363			444		
	24'	179			250			329			416			510		
	28'	201			282			371			469			575		
	32'	223			313			413			522			641		
	36'	245			345			455			576			707		
16" OC	12'	151	164	72R	209	202	89R	273	245	108 R	344	291	129 R	420	342	151 R
	16'	180			250			328			413			506		
	20'	209			292			383			484			593		
	24'	238			334			439			554			680		
	28'	268			376			495			625			767		
	32'	297			418			551			696			855		
	36'	327			460			607			768			943		
24" OC	12'	227	246	109 R	314	304	134 R	410	367	162 R	515	437	193 R	227	513	227 R
	16'	270			375			492			620			270		
	20'	314			438			575			726			314		
	24'	358			501			659			832			358		
	28'	402			563			742			938			402		
	32'	446			627			826			1045			446		
	36'	490			690			910			1151			490		

U = CONNECTOR UPLIFT LOAD
L = CONNECTOR LATERAL LOAD (PERPENDICULAR TO THE WALL)
S = CONNECTOR SHEAR LOAD (PARALLEL TO THE WALL)
R = LW FOR WIND PERPENDICULAR TO THE RIDGE AND W/L FOR WIND PARALLEL TO THE RIDGE, WHERE W IS THE BUILDING WIDTH AND L IS THE BUILDING LENGTH
- UPLIFT LOADS ASSUME A REDUCED ROOF / CEILING ASSEMBLY DEAD LOAD OF 9 psf (0.6 x 15 psf = 9 psf). FOR WALL OR FOUNDATION CONNECTIONS, UPLIFT VALUES SHALL BE PERMITTED TO BE REDUCED BY 60 pf (0.6 x 99 psf) FOR EACH WALL ABOVE.

R14 RAFTER TO WALL CONNECTION

BASED ON WFCM TABLE A-3.4

RAFTER / CEILING JOIST HEEL JOINT CONNECTION									
		20 psf ROOF LIVE LOAD			30 psf GROUND SNOW LOAD				
		ROOF SPAN							
RAFTER SLOPE	RAFTER SPACING	12'	24'	36'	12'	24'	36'		
		REQUIRED NUMBER OF .131"x 3.25" NAILS PER JOIST							
3:12	12" OC	4	7	11	4	8	12		
	16" OC	5	10	14	5	10	15		
	24" OC	7	14	21	8	15	23		
5:12	12" OC	3	5	7	3	5	7		
	16" OC	3	6	9	3	6	9		
	24" OC	5	9	13	5	9	14		
7:12	12" OC	2	3	5	2	4	5		
	16" OC	2	4	5	3	5	7		
	24" OC	3	6	9	4	7	10		
9:12	12" OC	2	3	4	2	3	4		
	16" OC	2	4	5	2	4	5		
	24" OC	3	5	7	3	5	8		
12:12	12" OC	2	2	3	2	2	3		
	16" OC	2	3	4	2	3	4		
	24" OC	2	4	6	2	4	6		

- REDUCED NAILING REQUIREMENTS BY 25% IF NAILS ARE CLINCHED
- HEEL JOIST CONNECTIONS ARE NOT REQUIRED WHEN THE RIDGE IS SUPPORTED
- EQUIVALENT NAILING PATTERNS ARE REQUIRED FOR CEILING JOIST LAP SPLICES
- TABULATED HEEL JOINT CONNECTION REQUIREMENTS DO NOT INCLUDE THE ADDITIONAL WEIGHT OF THE CEILING ASSEMBLY
- TABULATED HEEL JOINT CONNECTION REQUIREMENTS ASSUME THAT CEILING JOISTS OR TIES ARE LOCATED AT THE BOTTOM OF THE ATTIC SPACE. WHEN CEILING JOISTS OR TIES ARE LOCATED HIGHER IN THE ATTIC, HEEL JOINT CONNECTION REQUIREMENTS SHALL BE INCREASED BY THE FOLLOWING FACTORS:

HC = HEIGHT OF CEILING JOISTS OR RAFTER TIES MEASURED VERTICALLY ABOVE THE TOP OF THE RAFTER SUPPORT WALLS	HC / HR	HEEL JOINT CONNECTION ADJUSTMENT FACTOR
HR = HEIGHT OF ROOF RIDGE MEASURED VERTICALLY ABOVE THE TOP OF THE RAFTER SUPPORT WALLS.	1/2	2.0
	1/3	1.5
	1/4	1.33
	1/5	1.25
	1/6	1.2
	1/10 OR LESS	1.11

R13 HEEL JOINT CONNECTION

BASED ON WFCM TABLE 3.9

CEILING JOISTS SPANS FOR SOUTHERN PINE #2 UNINHABITABLE ATTICS (L/240)								
CEILING JOIST SPACING	WITHOUT STORAGE LIVE LOAD = 10 psf DEAD LOAD = 5 psf				WITH LIMITED STORAGE LIVE LOAD = 20 psf DEAD LOAD = 10 psf			
	2x4	2x6	2x8	2x10	2x4	2x6	2x8	2x10
	MAXIMUM RAFTER SPANS							
12" OC	12'-5"	19'-6"	25'-8"	28'-0"	9'-10"	15'-1"	19'-5"	23'-2"
16" OC	11'-3"	17'-8"	23'-4"	26'-0"	8'-11"	13'-6"	17'-5"	20'-9"
19.2" OC	10'-7"	16'-8"	21'-11"	26'-0"	8'-5"	12'-3"	15'-10"	18'-11"
24" OC	9'-10"	15'-8"	20'-1"	23'-11"	7'-8"	11'-0"	14'-2"	16'-11"

R06 CEILING JOIST SPAN TABLE (SYP#2)

BASED ON IRC TABLE R802.4(1-2)

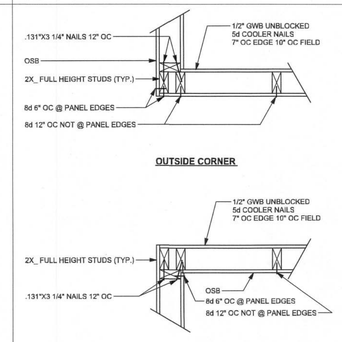

W62 (TYP.) FRAMED WALL CORNER

WOOD FRAMED WALL SYSTEM N.T.S.

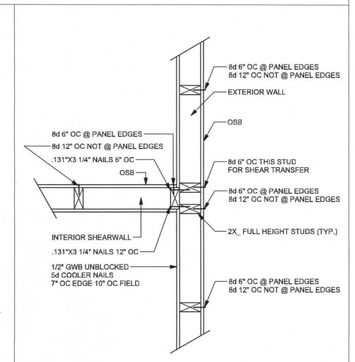

W63 (TYP.) FRAMED WALL INTERSECTION

WOOD FRAMED WALL SYSTEM N.T.S.

WINDLOAD ENGINEERMark Disoway, PE No.53915, POB 868, ake City, FL 32056, 386-754-5419

DIMENSIONS: Stated dimensions superede scaled dimensions. Refer all quetions to Mark Disoway, P.E. for resolution. Do not proceed without cirification.

COPYRIGHTS AND PROPERTY RIGHTS: Mark Disoway, P.E. hereby expressly reserves its common law copyright and property right in these instruments of service. This document is not to be reproduced, altered or copied in any form or manner without fist the express written permission and consent of Mark Disoway.

CERTIFICATION: I hereby certify that I have examined this plan, and tat the applicable portions of the plan, relating to wind engineering comply with section R30.2.1, florida building code residential 2007 & 209 Supplements, to the best of my knowlege.

LIMITATION: This desigi is valid for one building, at specified location.

MARK DISOWAY P.E. 5915

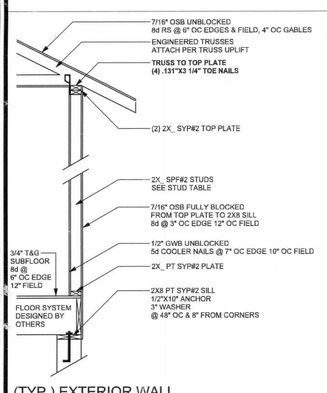

(TYP.) EXTERIOR WALL

ONE STORY WOOD FRAME ON WOOD FLOOR w/ STRAPS & ANCHORS

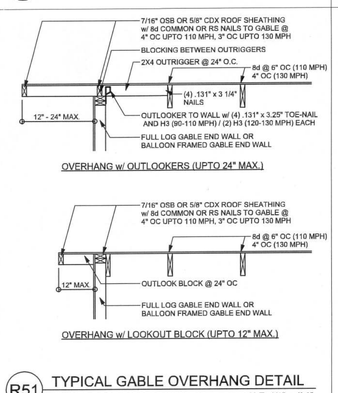

(TYP.) EXTERIOR WALL

ONE STORY WOOD FRAME w/ STRAPS ANCHORS

R51 TYPICAL GABLE OVERHANG DETAIL

FRAMED ROOF @ GABLE WALL SCALE: 1/2" = 1'-0"

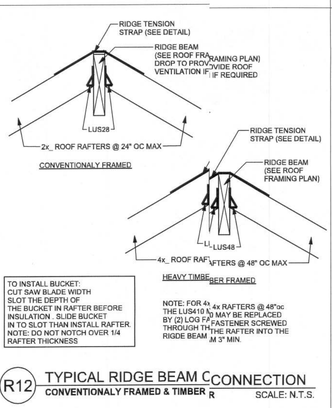

R12 TYPICAL RIDGE BEAM CONNECTION

CONVENTIONALLY FRAMED & TIMBER R SCALE: N.T.S.

RAFTER SPANS FOR SOUTHERN PINE #2 ROOF LIVE LOAD = 20 PSF											
	DEAD LOAD = 10 psf CEILING NOT ATTACHED TO RAFTERS (L/180)						DEAD LOAD = 20 psf CEILING ATTACHED TO RAFTERS (L/240)				
RAFTER SPACING	2x4	2x6	2x8	2x10	2x12	2x4	2x6	2x8	2x10	2x12	
	MAXIMUM RAFTER SPANS										
12" OC	10'-10"	17'-0"	22'-5"	26'-0"	26'-0"	9'-10"	15'-1"	19'-5"	23'-2"	26'-0"	
16" OC	9'-10"	15'-1"	19'-5"	23'-2"	26'-0"	8'-11"	13'-0"	16'-10"	20'-1"	23'-7"	
19.2" OC	9'-3"	13'-9"	17'-9"	21'-2"	24'-10"	8'-4"	11'-11"	15'-4"	18'-4"	21'-6"	
24" OC	8'-7"	12'-3"	15'-10"	18'-11"	22'-2"	7'-5"	10'-8"	13'-9"	16'-5"	19'-3"	

RAFTER SPANS FOR SOUTHERN PINE #2 GROUND SNOW LOAD = 30 PSF											
	DEAD LOAD = 10 psf CEILING NOT ATTACHED TO RAFTERS (L/180)						DEAD LOAD = 20 psf CEILING ATTACHED TO RAFTERS (L/240)				
RAFTER SPACING	2x4	2x6	2x8	2x10	2x12	2x4	2x6	2x8	2x10	2x12	
	MAXIMUM RAFTER SPANS										
12" OC	9'-6"	14'-5"	18'-8"	22'-3"	26'-0"	8'-7"	12'-11"	16'-8"	19'-11"	23'-4"	
16" OC	8'-7"	12'-8"	16'-2"	19'-3"	22'-7"	7'-10"	11'-2"	14'-5"	17'-3"	20'-2"	
19.2" OC	7'-11"	11'-5"	14'-7"	17'-7"	20'-7"	7'-1"	10'-2"	13'-2"	15'-9"	18'-6"	
24" OC	7'-1"	10'-2"	13'-2"	15'-9"	18'-5"	6'-4"	9'-2"	11'-9"	14'-1"	16'-6"	

THE TABULATED RAFTER SPANS ASSUME THAT CEILING JOISTS ARE LOCATED AT THE BOTTOM OF THE ATTIC SPACE OR THAT SOME OTHER METHOD OF RESISTING THE OUTWARD PUSH OF THE RAFTERS ON THE BEARING WALLS SO ACTS AS RAFTER TIES. IS PROVIDED AT THAT LOCATION. WHEN CEILING JOISTS OR RAFTER TIES ARE LOCATED HIGHER IN THE ATTIC SPACE, THE RAFTER SPACNS SHALL BE MULTIPLIED BY THE FACTORS GIVEN BELOW:

HC = HEIGHT OF CEILING JOISTS OR RAFTER TIES MEASURED VERTICALLY ABOVE THE TOP OF THE RAFTER SUPPORT WALLS	HC / HR	RAFTER SPAN ADJUSTMENT FACTOR
HR = HEIGHT OF ROOF RIDGE MEASURED VERTICALLY ABOVE THE TOP OF THE RAFTER SUPPORT WALLS.	1/2	0.56
	1/3	0.67
	1/4	0.76
	1/5	0.83
	1/7.5 OR LESS	1.00

R04 RAFTER SPAN TABLE (SYP#2)

BASED ON IRC TABLE R802.5.1 (1-3, 5)

SILL PLATE SPANS FOR 10'-0" WALL HEIGHT				
DESIGN WIND SPEED	MAX. SPANS FOR SP/F #2			BASED ON WFCM TABLE A-3.23B
	(1) 2x4	(2) 2x4	(1) 2x6	(2) 2x6
90-100 MPH	5'-3"	7'-9"	7'-8"	11'-4"
110-120 MPH	4'-4"	6'-6"	6'-5"	9'-6"
130 MPH	4'-0"	6'-0"	5'-11"	8'-9"

FOR OTHER WALL HEIGHTS (H) SILL SPAN SHALL BE DIVIDED BY (H/10)

W64 TYPE FRAME OPENING DETAILS

STRAPS ON WD FLOOR OR SLAB N.T.S.

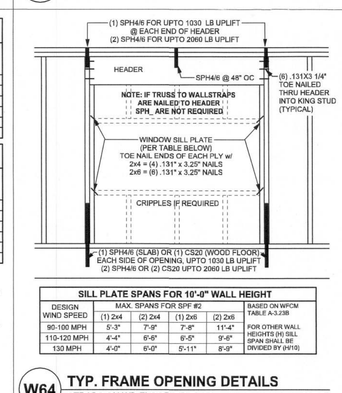

W71 INTERIOR BEARING WALL SECTION

STRAPS ON WD FLOOR OR SLAB 1/2" = 1'-0"

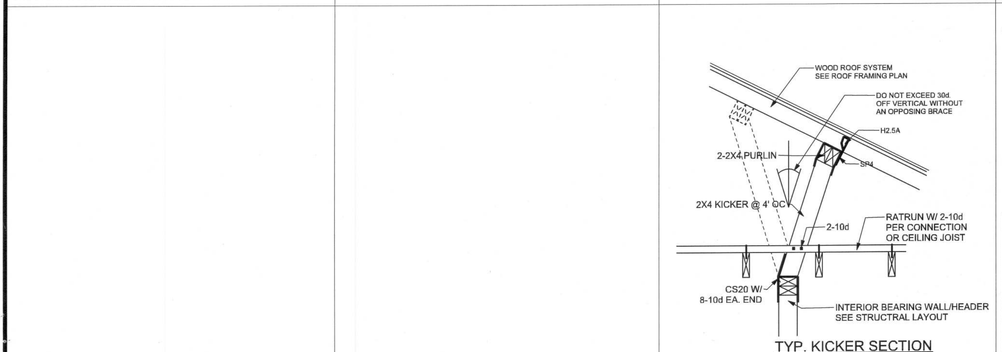

TYP. KICKER SECTION

SCALE: 3/4" = 1'-0"

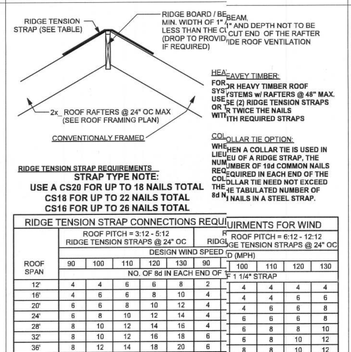

RIDGE TENSION STRAP REQUIREMENTS

STRAP TYPE NOTE:
USE A CS20 FOR UP TO 18 NAILS TOTAL
CS16 FOR UP TO 22 NAILS TOTAL
CS16 FOR UP TO 26 NAILS TOTAL

RIDGE TENSION STRAP CONNECTIONS REQUIREMENTS FOR WIND											
	ROOF PITCH = 3:12 - 5:12 RIDGE TENSION STRAPS @ 24" OC						ROOF PITCH = 6:12 - 12:12 RIDGE TENSION STRAPS @ 24" OC				
	DESIGN WIND SPEED (MPH)										
ROOF SPAN	90	100	110	120	130	90	100	110	120	130	
	NO. OF 8d IN EACH END OF STRAP						1/4" STRAP				
12'	4	4	6	6	8	2	4	4	4	4	
16'	4	6	6	8	10	4	4	4	6	6	
20'	6	6	8	10	12	4	4	6	6	8	
24'	6	8	10	12	14	4	6	6	6	8	
28'	8	10	12	14	16	4	6	8	8	10	
32'	8	10	12	16	18	6	6	8	10	12	
36'	8	12	14	18	20	6	8	8	10	12	

R11 TYPICAL RIDGE TENSION STRAP

BASED ON WFCM, TABLE A-3.6A, EXP C SCALE: N.T.S.

- RAFTERS SHALL BE IN ACCORDANCE WITH MAX SPANS (HORIZONTAL PROJECTION) SPECIFIED IN RAFTER SPAN TABLES.
- RAFTER OVERHANGS SHALL NOT EXCEED THE LESSER OF 1/3 RAFTER SPAN OR 24" UNO.
- RAKE OVERHANG OUTLOOKERS SHALL USE 2X4 PURLINS CONNECTED AS PER GABLE END DETAIL. RAKE OVERHANGS SHALL NOT EXCEED THE LESSER OF 1/2 PURLIN LENGTH OR 24". RAKE OVERHANGS USING 2X4/6 OUTLOOK BLOCKING @ 24" OC SHALL NOT EXCEED 12"
- NOTCHING AND BORING RAFTERS SHALL BE AS FOLLOWS: NOTCHES IN TOP OR BOTTOM EDGE OF SOLID-SAWN RAFTERS SHALL NOT BE IN THE MIDDLE 1/3 OF SPAN. NOTCHES IN OUTER 1/3 OF SPAN SHALL NOT EXCEED 1/6 OF RAFTER DEPTH. NOTCHES AT SUPPORTS SHALL NOT EXCEED 1/4 RAFTER DEPTH. BORED HOLES SHALL NOT EXCEED 1/3 RAFTER DEPTH WITH A MIN. EDGE DISTANCE OF 2".
- RAFTERS BEARING SHALL NOT BE LESS THAN 1 1/2" BEARING DIRECTLY ON BEAMS, GIRDERS, LEDGERS, OR BEARING WALLS OR BE SUPPORTED BY APPROVED JOIST HANGERS OR FRAMING ANCHORS.
- END RESTRAINT AGAINST TWISTING SHALL BE PROVIDED AT EACH END OF RAFTER BY FASTENING TO A RIM BOARD OR BY USING FULL-HEIGHT BLOCKING BETWEEN RAFTER ENDS.
- RIDGE BEAM SHALL BE INSTALLED PER FRAMING PLANS, WITH RAFTER BEARING ON BEAM OR HANGERS. CEILING JOISTS OR RAFTER TIES ARE NOT REQUIRED WHEN RIDGE BEAM IS PROVIDED.
- RIDGE BOARDS SHALL BE PERMITTED, PROVIDED THAT THE RIDGE BOARD IS A MIN. THICKNESS OF 1" NOMINAL AND NOT LESS THAN THE CUT END OF THE RAFTERS. RAFTERS ARE PLACED DIRECTLY OPPOSITE EACH OTHER, AND EXTERIOR WALLS ARE TIED BY CEILING JOISTS, RAFTER TIES OR FLOOR SYSTEM.
- HIP AND VALLEY BEAM SHALL BE INSTALLED PER FRAMING PLANS, WITH RAFTER BEARING ON BEAM OR HANGERS.
- CEILING JOISTS SHALL BE IN ACCORDANCE WITH MAX SPANS (HORIZONTAL PROJECTION) SPECIFIED IN CEILING JOIST SPAN TABLE.
- CATHEDRAL CEILINGS WITHOUT CEILING JOISTS OR RAFTER TIES SHALL HAVE RAFTERS ATTACHED AT EACH END, TO BEARING WALLS, HEADERS, OR RIDGE BEAMS.
- ROOF DIAPHRAGM BLOCKING AND CONNECTIONS SHALL BE PROVIDED AT PANEL EDGES PERPENDICULAR TO ROOF FRAMING IN THE FIRST 2 BAYS OF FRAMING, SPACED AT 48"OC MAX.
- SHEATHING EDGE SUPPORT FOR ALL 7/16" ROOF SHEATHING SUPPORTED @ 24" OC SHALL BE PROVIDED BY BLOCKING OR EDGE CLIPS.

R01 ROOF SYSTEM DESIGN NOTE

WOOD RAFTER FRAMING

RAFTER SPANS FOR SOUTHERN PINE #2 ROOF LIVE LOAD = 20 PSF											
	DEAD LOAD = 10 psf CEILING NOT ATTACHED TO RAFTERS (L/180)						DEAD LOAD = 20 psf CEILING ATTACHED TO RAFTERS (L/240)				
RAFTER SPACING	2x4	2x6	2x8	2x10	2x12	2x4	2x6	2x8	2x10	2x12	
	MAXIMUM RAFTER SPANS										
12" OC	10'-10"	17'-0"	22'-5"	26'-0"	26'-0"	9'-10"	15'-1"	19'-5"	23'-2"	26'-0"	
16" OC	9'-10"	15'-1"	19'-5"	23'-2"	26'-0"	8'-11"	13'-0"	16'-10"	20'-1"	23'-7"	
19.2" OC	9'-3"	13'-9"	17'-9"	21'-2"	24'-10"	8'-4"	11'-11"	15'-4"	18'-4"	21'-6"	
24" OC	8'-7"	12'-3"	15'-10"	18'-11"	22'-2"	7'-5"	10'-8"	13'-9"	16'-5"	19'-3"	

RAFTER SPANS FOR SOUTHERN PINE #2 GROUND SNOW LOAD = 30 PSF											
	DEAD LOAD = 10 psf CEILING NOT ATTACHED TO RAFTERS (L/180)						DEAD LOAD = 20 psf CEILING ATTACHED TO RAFTERS (L/240)				
RAFTER SPACING	2x4	2x6	2x8	2x10	2x12	2x4	2x6	2x8	2x10	2x12	
	MAXIMUM RAFTER SPANS										
12" OC	9'-6"	14'-5"	18'-8"	22'-3"	26'-0"	8'-7"	12'-11"

TALL STEM WALL TABLE

The table assumes 60 ksi reinforcing bars with 6" hook in the footing and bent 24" into the reinforced slab at the top. The vertical steel is to be placed toward the tension side of the CMU wall (away from the soil pressure, within 2" of the exterior side of the wall). If the wall is over 8' high, add Durowall ladder reinforcement at 16"OC vertically or a horizontal bond beam with 1#5 continuous at mid height. For higher parts of the wall 12" CMU may be used with reinforcement as shown in the table below.

STEMWALL HEIGHT (FEET)	UNBALANCED BACKFILL HEIGHT	VERTICAL REINFORCEMENT FOR 8" CMU STEMWALL (INCHES O.C.)			VERTICAL REINFORCEMENT FOR 12" CMU STEMWALL (INCHES O.C.)		
		#5	#7	#8	#5	#7	#8
3.3	3.0	96	96	96	96	96	96
4.0	3.7	96	96	96	96	96	96
4.7	4.3	88	96	96	96	96	96
5.3	5.0	56	96	96	96	96	96
6.0	5.7	40	80	96	80	96	96
6.7	6.3	32	56	80	56	96	96
7.3	7.0	24	40	56	40	80	96
8.0	7.7	16	32	48	32	64	80
8.7	8.3	8	24	32	24	48	64
9.3	9.0	8	16	24	16	40	48

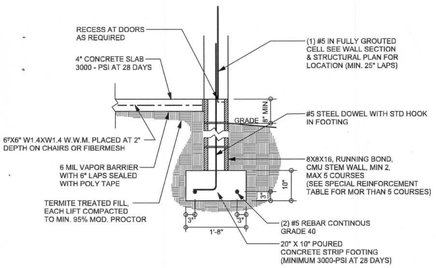

F17 S-2 STEM WALL FOOTING
SCALE: 1/2" = 1'-0"

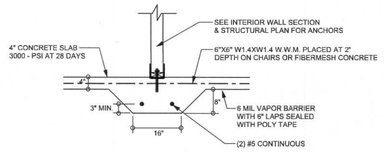

F2 S-2 INTERIOR BEARING FOOTING
SCALE: 1/2" = 1'-0"

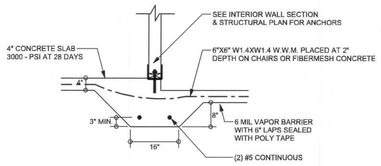

F3 S-2 INTERIOR BEARING STEP FOOTING
SCALE: 1/2" = 1'-0"

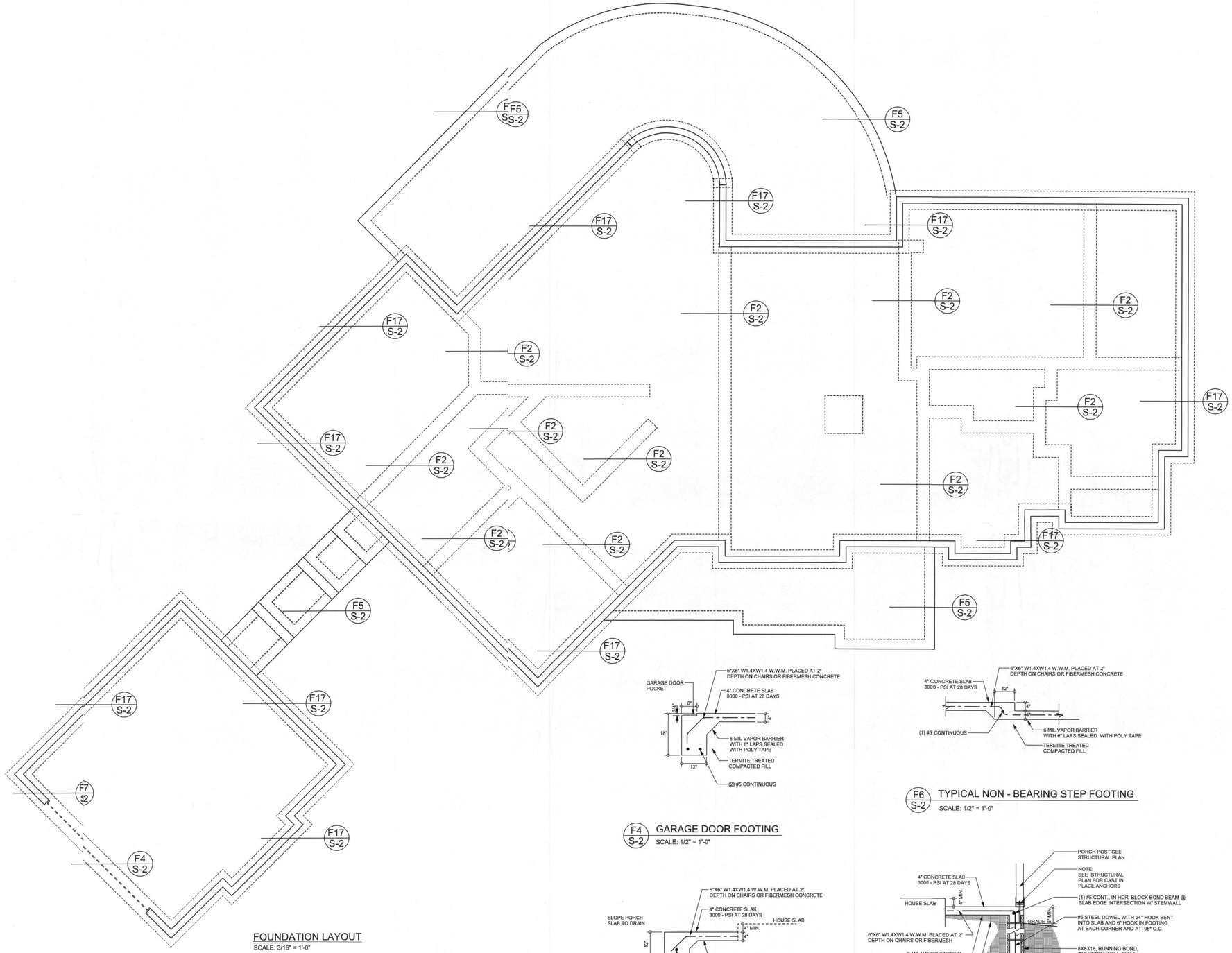

FOUNDATION LAYOUT
SCALE: 3/16" = 1'-0"

F4 S-2 GARAGE DOOR FOOTING
SCALE: 1/2" = 1'-0"

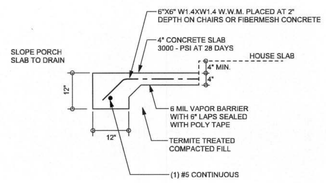

F5 S-2 PORCH FOOTING
SCALE: 1/2" = 1'-0"

F6 S-2 TYPICAL NON - BEARING STEP FOOTING
SCALE: 1/2" = 1'-0"

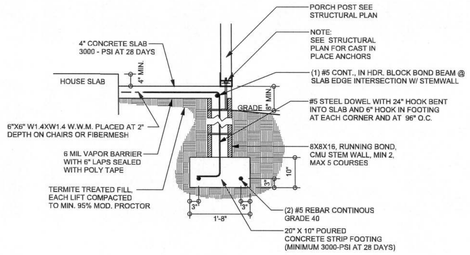

F12 S-2 ALT. STEM WALL PORCH FOOTING
SCALE: 1/2" = 1'-0"

REVISIONS

SOFTPLAN ARCHITECTURAL DESIGN SOFTWARE

WINDLOAD ENGINEER: Mark Diosway, PE No.53915, POB 868, Lake Cit, FL 32056, 386-754-5419

DIMENSIONS:
Stated dimensions supercede scaled dimensions. Refer all questions to Mark Diosoway, P.E. for resolution. Do not proceed without clarification.

COPYRIGHTS AND PROPERTY RIGHTS:
Mark Diosoway, P.E. hereby expressly reserves its common law copyrights and property right in these instruments of service. This document is not to be reproduced, altered or copied in any form or manner without first the express written permission and consent of Mark Diosoway.

CERTIFICATION: I hereby certify that I have examined this plan, and that the applicable portions of the plan, relating to wind engineering comply with section R301.2.1, florida building code residential 2007 & 2009 Suplements, to the best of my knowledge.

LIMITATION: This design is valid or one building, at specified location.

MARK DISOSWAY
P.E. 53915

3/17/2010

SEAL

Enver Sakii
Residence

SITE ADDRESS:
Lost Hills of Huntsvile S/D
Columbia County, Florida

Mark DisoswayP.E.
P.O. Box 868
Lake City, Florida32056
Phone: (386) 754- 5419
Fax: (386) 269 -4871

PRINTED DATE:
March 17, 2010

DRAWN BY:	STRUCTURAL BY:
Evan Beamsley	EvarBeamsley
FINALS DATE: 2010-03-17	

JOB NUMBER:
1001035

DRAWING NUMER
S-2
OF 5 SHEETS

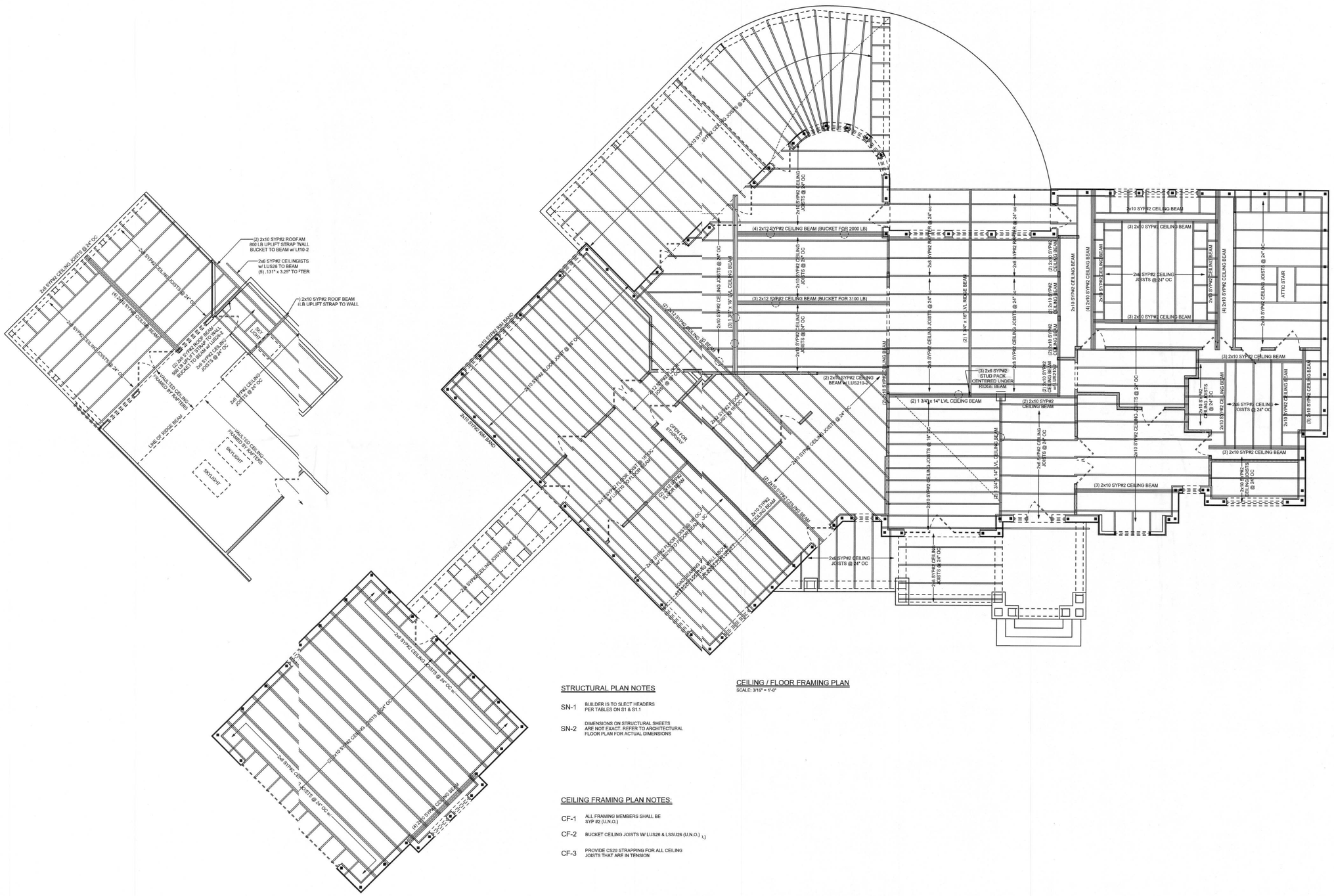
(2) 2x10 SYPI#2 ROOFAM
800 LB UPLIFT STRAP TWALL
BUCKET TO BEAM w/ LTI3-2
2x6 SYPI#2 CEILINGISTS
w/ LUS26 TO BEAM
(5) .131" x 3.25" TO TTER
(2) 2x10 SYPI#2 ROOF BEAM
(LB UPLIFT STRAP TO WALL
2x6 SYPI#2 CEILING
JOISTS @ 24" OC
2x6 SYPI#2 CEILING JOISTS @ 24" OC
(2) 2x10 SYPI#2 CEILING BEAM
(2) 2x6 SYPI#2 ROOF BEAM
800 LB UPLIFT STRAP TO WALL
BUCKET TO BEAM w/ LSSXU
2x6 SYPI#2 CEILING
JOISTS @ 24" OC
VAULTED CEILING
FRAMED BY ROFTERS
LINE OF ROOE BEAM
SKYLIGHT
2x6 SYPI#2 CEILING
JOISTS @ 24" OC
2x6 SYPI#2 CEILING JOISTS @ 24" OC
(4) 2x12 SYPI#2 CEILING BEAM (BUCKET FOR 2000 LB)
(3) 2x12 SYPI#2 CEILING BEAM (BUCKET FOR 3100 LB)
2x10 SYPI#2 CEILING JOISTS @ 24" OC
2x10 SYPI#2 CEILING BEAM
2x10 SYPI#2 BM BAND
2x10 SYPI#2 FLOOR JOISTS @ 24" OC
2x10 SYPI#2 FLOOR BEAM
OPEN FOR
STAIRWAY
2x10 SYPI#2 CEILING JOISTS @ 24" OC
(2) 2x10 SYPI#2 CEILING BEAM
2x6 SYPI#2 CEILING
JOISTS @ 24" OC
(2) 2x10 SYPI#2 CEILING BEAM
(2) 2x10 SYPI#2 CEILING BEAM
(2) 2x10 SYPI#2 CEILING BEAM

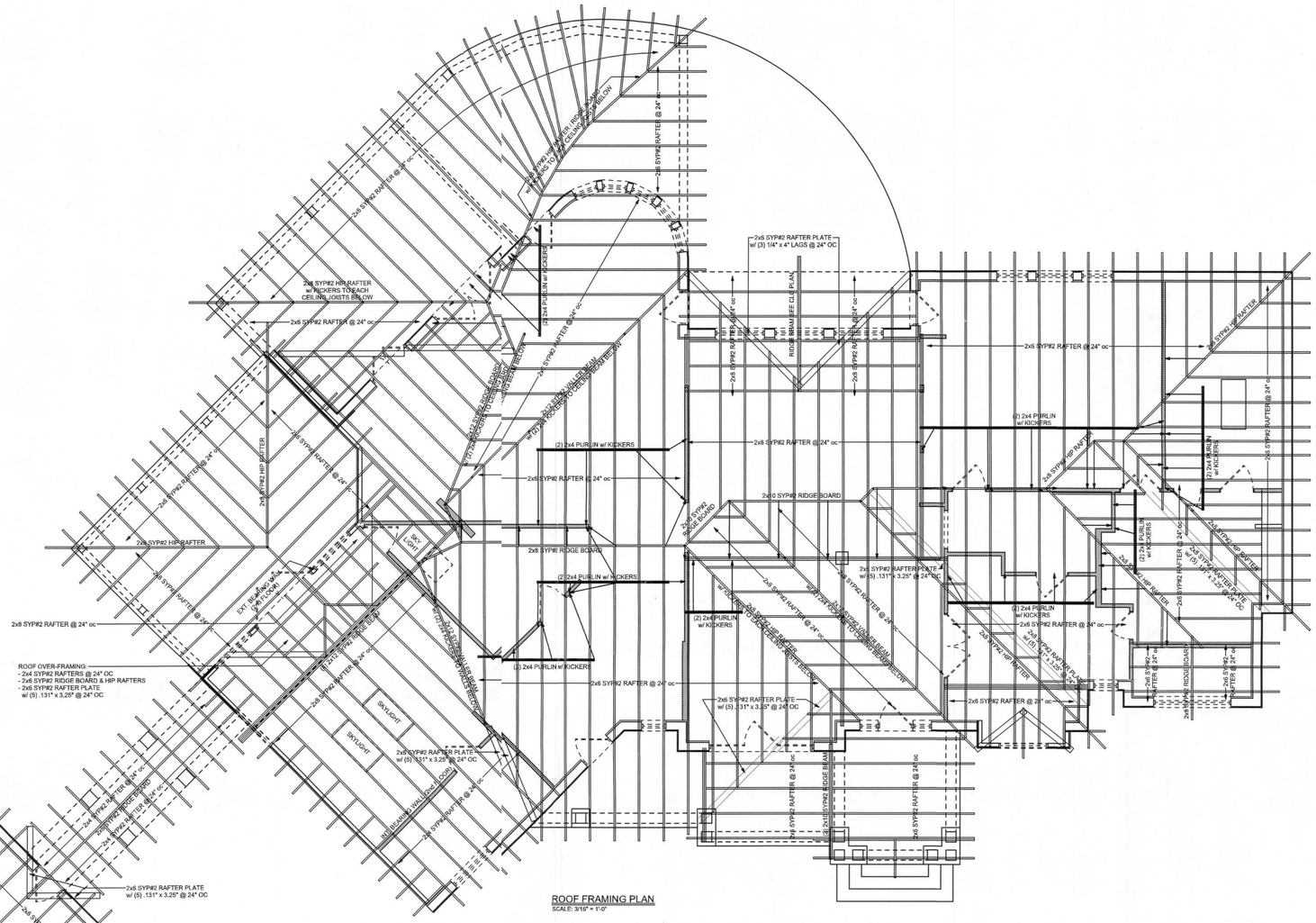
2x6 SYP#2 RAFTER PLATE w/ (3) 1/4" x 4" LAGS @ 24" OC
2x6 SYP#2 HIP RAFTER w/ KICKERS TO EACH CEILING JOISTS BELOW
2x6 SYP#2 RAFTER @ 24" oc
(2) 2x4 PURLIN w/ KICKERS
2x6 SYP#2 RAFTER @ 24" oc
RIDGE BEAM SEE CLG PLAN
2x6 SYP#2 RAFTER @ 24" oc
2x6 SYP#2 RAFTER @ 24" oc
(2) 2x4 PURLIN w/ KICKERS
2x6 SYP#2 RAFTER @ 24" oc
2x6 SYP#2 RAFTER @ 24" oc
2x6 SYP#2 HIP RAFTER
2x6 SYP#2 RAFTER @ 24" oc
2x6 SYP#2 HIP RAFTER
2x6 SYP#2 RAFTER @ 24" oc
2x10 SYP#2 RIDGE BOARD
2x8 SYP#2 RIDGE BOARD
2x8 SYP#2 RIDGE BOARD
(2) 2x4 PURLIN w/ KICKERS
2x6 SYP#2 RAFTER PLATE w/ (5) .131" x 3.25" @ 24" OC
2x8 SYP#2 RAFTER @ 24" oc
CKT. BEARING WALL OVER LOWER FLOOR
(2) 2x4 PURLIN w/ KICKERS
(2) 2x4 PURLIN w/ KICKERS
2x6 SYP#2 RAFTER @ 24" oc
2x6 SYP#2 RAFTER @ 24" oc
2x6 SYP#2 RAFTER @ 24" oc
2x6 SYP#2 HIP RAFTER
2x6 SYP#2 RAFTER @ 24" oc
2x6 SYP#2 RAFTER @ 24" oc
2x6 SYP#2 RAFTER @ 24" oc