LOT 15 FAIRWAY VIEW UNIT 4.
660-117, 846-1764, PB 1509-2359,

JACKSON ROY WILLIAM JR/JACKSON GLENN WAYNE
1074 NW FRONTIER DRIVE
LAKE CITY, FL 32055

2024

26-3S-16-02308-092

COLUMBIA COUNTY PROPERTY

BUILDING CHARACTERISTICS

ELEMENT	CD	CONSTRUCTION
Exterior Wall	17	MSNRY STUC 100
Roof Structur	03	GABLE/HIP 100
Roof Cover	03	COMP SHNGL 100
Interior Wall	05	DRYWALL 100
Interior Floo	12	HARDWOOD 90
Interior Floo	15	HARDTILE 10
Air Condition	03	CENTRAL 100
Heating Type	04	AIR DUCTED 100
Bedrooms		3 100
Bathrooms		4 100
Frame	01	NONE 100
Stories	1.	1. 100
Architectual	05	CONV 100
Units		0 100
Condition Adj	03	03 100
Kitchen Adjus	01	01 100
Quality	07	07
DOR CODE	0100	SINGLE FAMILY
MAP NUM		MKT AREA 06
NEIGHBORHOOD/LOC	26316.030	1.00/

AREA TYPE	TOTAL GROSS AREA	PCT OF BASE	TOT ADJ AREA	SUBAREA MARKET VALUE
BAS	2,810	100	2,810	215,912
FBM	2,000	80	1,600	122,940
FGR	750	55	412	31,657
FOP	324	30	97	7,453
FST	70	55	38	2,920
UOP	100	20	20	1,536
TOTALS	6,054		4,977	382,419

MARKET ADJUSTMENTS

TYPE	MDL	EFF. AREA	TOT ADJ PTS	EFF. BASE RATE	REPL. COST NEW	AYB	EYB	ECON	FNCT		NORM	% COND
0100	01	4,977	121.2750	116.42	579,422	1989	1989	0	0	0	34.00	66.00

1 SINGLE FAM – 100% - 1998 Heated Area: 4810 HX Base Yr 1998

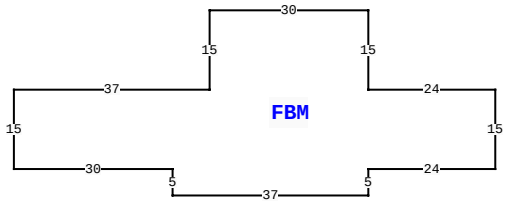

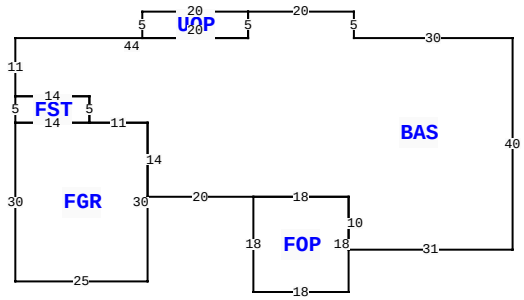

1074 NW FRONTIER DR, LAKE CITY

BLD DATE		LGL DATE	
XF DATE		LAND DATE	05/11/2023 MLU
INC DATE		AG DATE	

VALUATION SUMMARY

VALUATION BY		STANDARD
Tax Group: 2	Tax Dist:	
BUILDING MARKET VALUE		382,419
TOTAL MARKET OB/XF VALUE		4,200
TOTAL LAND VALUE - MARKET		36,000
TOTAL MARKET VALUE		422,619
SOH/AGL Deduction		123,417
ASSESSED VALUE		299,202
TOTAL EXEMPTION VALUE	HX HB	50,000
BASE TAXABLE VALUE		249,202
TOTAL JUST VALUE		422,619
NCON VALUE		0
INCOME VALUE		
PREVIOUS YEAR MKT VALUE		428,413

SALE:1:1: LOT 15 FAIRWAY VIEW UNIT 4

PERMIT NUM	DESCRIPTION	AMT	ISSUED
32438	REMODEL	250	10/29/2014
27834	MAINT/ALTR	445	05/27/2009

SALES DATA

OFF RECORD Number	DATE	TYPE INST	Q U	V I	RSN CD	SALE PRICE
1509/2366	3/06/2024	PB	U	I	18	0
GRANTOR: CLERK OF COURT						
GRANTEE: JACKSON ROY WILLIAM						
0846/1764	9/25/1997	WD	Q	I		220,000
GRANTOR: HOUSEMAN						
GRANTEE: FRANCES TERRY						

BUILDING NOTES

BUILDING DIMENSIONS

BAS= W30 N5 W20 UOP= W20 S5 E20 N5$ S5 W44 S11 FST= S5 E14 N5 W14$ E14 S5 FGR= W14 S30 E25 N30 W11$ E11 S14 E20 FOP= S18 E18 N18 W18$ E18 S10 E31 N40$ PTR=N40 FBM= E37N5 E24 N15 W24 N15 W30 S15 W37S15 E30 S5$ S40$.

EXTRA FEATURES

LN	OB/XF CODE	DESCRIPTION	BLD	CAP	L	W	UNITS	UT	Adj R	ADJ UNIT PRICE	ORIG COND	YEAR ON	YEAR ACTUAL	Q	% COND	OB/XF MKT VALUE	NOTES
1	0166	CONC,PAVMT	0	100	0	0	1.00	UT	0.00	0.00	100	0	0	3	100	3,000	
2	0190	FPLC PF	0	100	0	0	1.00	UT	1,200.00	1,200.00	100	0	0	3	100	1,200	

LAND DESCRIPTION

TOTAL OB/XF 4,200

LN	USE CODE	CLS	LAND USE DESCRIPTION	CAP	RD	LOC ZONE	FRONT	DEPTH	TOT LND UTS	UNIT TYPE	DT	DPTH FACT	% COND	TOT ADJ	UNIT PRICE	ADJ UNIT PRICE	LAND VALUE	OTHER ADJUSTMENTS AND NOTES	YEAR	DENSITY	DECL	FRZ	YR	CONSRV
1	0140	C	SFR GOLF	100		00	0.00	0.00	1.00	LT		1.00	1.00	1.20	30,000.00	36,000.00	36,000							

REVIEW DATE 05/25/2023 BY JB Total Acres: 0.42 Total Land Value: 36,000 Market: 0 Agricultural: 0 Common: 36,000 PRINTED 03/27/2024 BY SYS