DATE 08/16/2007

Columbia County Building Permit

This Permit Expires One Year From the Date of Issue

PERMIT
000026141

APPLICANT JACOB KIRSCH PHONE 755-2082

ADDRESS 197 SW WATERFORD CT # 106 LAKE CITY FL 32055

OWNER COMPASS BUILDERS PHONE 755-2082

ADDRESS 8998 SW SR 47 LAKE CITY FL 32024

CONTRACTOR JACOB KIRSCH PHONE 344-4817

LOCATION OF PROPERTY 47 SOUTH, JUST PAST THRASHER LN ON THE RIGHT

TYPE DEVELOPMENT SFD,UTILITY ESTIMATED COST OF CONSTRUCTION 59800.00

HEATED FLOOR AREA 1196.00 TOTAL AREA 1529.00 HEIGHT 16.00 STORIES 1

FOUNDATION CONCRETE WALLS FRAMED ROOF PITCH 6/12 FLOOR SLAB

LAND USE & ZONING AG-3 MAX. HEIGHT 35

Minimum Set Back Requirments: STREET-FRONT 30.00 REAR 25.00 SIDE 25.00

NO. EX.D.U. 0 FLOOD ZONE A DEVELOPMENT PERMIT NO.

PARCEL ID 15-5S-16-03626-320 SUBDIVISION COLUMBIA HOMESITES

LOT 20 BLOCK PHASE UNIT 1 TOTAL ACRES 0.50

000001434		CBC1253775		
Culvert Permit No.	Culvert Waiver	Contractor's License Number	Applicant/Owner/Contractor	
DOT APPROVED	07-0399	BK	JH	N
Driveway Connection	Septic Tank Number	LU & Zoning checked by	Approved for Issuance	New Resident

COMMENTS: SECT. 2.3.1 LEGAL NON-CONFORMING LOT OF RECORD, RESOLUTION 2005-26R

FINISHED FLOOR ELEVATION TO BE @ 56.0', ELEVATION CONFIRMATION LETTER

REQUIRD BEFORE SLAB: SEE CO ENGINEERS NOTE IN PACKAGE Check # or Cash 11355

FOR BUILDING & ZONING DEPARTMENT ONLY

(footer/Slab)

Temporary Power _____ date/app. by Foundation _____ date/app. by Monolithic _____ date/app. by

Under slab rough-in plumbing _____ date/app. by Slab _____ date/app. by Sheathing/Nailing _____ date/app. by

Framing _____ date/app. by Rough-in plumbing above slab and below wood floor _____ date/app. by

Electrical rough-in _____ date/app. by Heat & Air Duct _____ date/app. by Peri. beam (Lintel) _____ date/app. by

Permanent power _____ date/app. by C.O. Final _____ date/app. by Culvert _____ date/app. by

M/H tie downs, blocking, electricity and plumbing _____ date/app. by Pool _____ date/app. by

Reconnection _____ date/app. by Pump pole _____ date/app. by Utility Pole _____ date/app. by

M/H Pole _____ date/app. by Travel Trailer _____ date/app. by Re-roof _____ date/app. by

BUILDING PERMIT FEE $ 300.00 CERTIFICATION FEE $ 7.65 SURCHARGE FEE $ 7.65

MISC. FEES $ 0.00 ZONING CERT. FEE $ 50.00 FIRE FEE $ 0.00 WASTE FEE $

FLOOD DEVELOPMENT FEE $ FLOOD ZONE FEE $ 25.00 CULVERT FEE $ 25.00 **TOTAL FEE** 415.30

INSPECTORS OFFICE CLERKS OFFICE

NOTICE: IN ADDITION TO THE REQUIREMENTS OF THIS PERMIT, THERE MAY BE ADDITIONAL RESTRICTIONS APPLICABLE TO THIS PROPERTY THAT MAY BE FOUND IN THE PUBLIC RECORDS OF THIS COUNTY. AND THERE MAY BE ADDITIONAL PERMITS REQUIRED FROM OTHER GOVERNMENTAL ENTITIES SUCH AS WATER MANAGEMENT DISTRICTS, STATE AGENCIES, OR FEDERAL AGENCIES.

"WARNING TO OWNER: YOUR FAILURE TO RECORD A NOTICE OF COMMENCEMENT MAY RESULT IN YOUR PAYING TWICE FOR IMPROVEMENTS TO YOUR PROPERTY. IF YOU INTEND TO OBTAIN FINANCING, CONSULT WITH YOUR LENDER OR AN ATTORNEY BEFORE RECORDING YOUR NOTICE OF COMMENCEMENT."

This Permit Must Be Prominently Posted on Premises During Construction

PLEASE NOTIFY THE COLUMBIA COUNTY BUILDING DEPARTMENT AT LEAST 24 HOURS IN ADVANCE OF EACH INSPECTION, IN ORDER THAT IT MAY BE MADE WITHOUT DELAY OR INCONVIENCE, PHONE 758-1008. THIS PERMIT IS NOT VALID UNLESS THE WORK AUTHORIZED BY IT IS COMMENCED WITHIN 6 MONTHS AFTER ISSUANCE.

The Issuance of this Permit Does Not Waive Compliance by Permittee with Deed Restrictions.

Columbia County Building Permit Application

(434)

For Office Use Only Application # 0705-81 Date Received 5/30/07 By G Permit # 26141

Application Approved by - Zoning Official BLK Date 07.08.07 Plans Examiner OK JTH Date 6-1-07

Flood Zone A Development Permit N/A Zoning A-3 Land Use Plan Map Category A-3

Comments Section 2.3.1 Legal Non-conforming Lot of Record. Resolut. 2005-21R

☐ NOC ☑ EH ☐ Deed or PA ☐ Site Plan FDOT approval in Package ☐ State Road Info ☐ Parent Parcel # ☐ Development Permit Required

Fax 386-752-5047

Name Authorized Person Signing Permit Jacob Kirsch Phone 386-755-2082

Address 147 SW Waterford ct. #106, Lake City FL 32025

Owners Name Compass Builders Phone 386-755-2082

911 Address 8998 SW SR 47, Lake City, FL 32024

Contractors Name Jacob Kirsch Phone 386-344-4817

Address 147 SW Waterford ct. #106, Lake City. FL 32025

Fee Simple Owner Name & Address

Bonding Co. Name & Address

Architect/Engineer Name & Address Mark Disosway, 754-5414

Mortgage Lenders Name & Address Columbia Bank, Turner rd,

Circle the correct power company - FL Power & Light - Clay Elec. - Suwannee Valley Elec. - Progressive Energy

Property ID Number 15-55-16-03626-320 Estimated Cost of Construction 55,000

Subdivision Name Columbia Homesites Lot 20 Block ____ Unit 1 Phase ____

Driving Directions HWY 47 S, past CR 240, .25 mile and Just Past thrasher Lane on Right.

Type of Construction Wood frame-SFD Number of Existing Dwellings on Property 0

Total Acreage .5 ac. Lot Size .5 ac. Do you need a - Culvert Permit (FDOT) or Culvert Waiver or Have an Existing Drive ~~Applying for DOT Permit~~

Actual Distance of Structure from Property Lines - Front 35' Side 88' Side 88' Rear 35'

Total Building Height 16' Number of Stories 1 Heated Floor Area 1196 Roof Pitch 6/12

TOTAL 1,529

Application is hereby made to obtain a permit to do work and installations as indicated. I certify that no work or installation has commenced prior to the issuance of a permit and that all work be performed to meet the standards of all laws regulating construction in this jurisdiction.

OWNERS AFFIDAVIT: I hereby certify that all the foregoing information is accurate and all work will be done in compliance with all applicable laws and regulating construction and zoning.

WARNING TO OWNER: YOUR FAILURE TO RECORD A NOTICE OF COMMENCMENT MAY RESULT IN YOU PAYING TWICE FOR IMPROVEMENTS TO YOUR PROPERTY. IF YOU INTEND TO OBTAIN FINANCING, CONSULT WITH YOUR LENDER OR ATTORNEY BEFORE RECORDING YOUR NOTICE OF COMMENCEMENT.

Owner Builder or Authorized Person by Notarized Letter

Contractor Signature

Contractors License Number CBC 1253775

Competency Card Number

NOTARY STAMP/SEAL

SUSAN E. MORRELL
Notary Public - State of Florida
My Commission Expires Jun 11, 2007
Commission # DD197424
Bonded By National Notary Assn.

STATE OF FLORIDA
COUNTY OF COLUMBIA

Sworn to (or affirmed) and subscribed before me

this 30th day of May 2007.

Personally known ✓ or Produced Identification ____

I.D. # 112 55

Notary Signature

(Revised Sept. 2006)

Columbia County Building Department
Culvert Permit

Culvert Permit No.
000001434

DATE 08/16/2007 PARCEL ID # 15-5S-16-03626-320

APPLICANT JACOB KIRSCH PHONE 755-2082

ADDRESS 197 SW WATERFORD CT #106 LAKE CITY FL 32055

OWNER COMPASS BUILDERS PHONE 755-2082

ADDRESS 8998 SW SR 47 LAKE CITY FL 32024

CONTRACTOR JACOB KIRSCH PHONE 344-4817

LOCATION OF PROPERTY HWY 47 S, PAST CR 240, GO .25 MILE JUST PAST THRASHER RD

IT IS ON THE RIGHT

SUBDIVISION/LOT/BLOCK/PHASE/UNIT COLUMBIA HOMWSITES 20 1

SIGNATURE

INSTALLATION REQUIREMENTS

☐ Culvert size will be 18 inches in diameter with a total lenght of 32 feet, leaving 24 feet of driving surface. Both ends will be mitered 4 foot with a 4 : 1 slope and poured with a 4 inch thick reinforced concrete slab.

INSTALLATION NOTE: Turnouts will be required as follows:
a) a majority of the current and existing driveway turnouts are paved, or;
b) the driveway to be served will be paved or formed with concrete.
Turnouts shall be concrete or paved a minimum of 12 feet wide or the width of the concrete or paved driveway, whichever is greater. The width shall conform to the current and existing paved or concreted turnouts.

☐ Culvert installation shall conform to the approved site plan standards.

☒ Department of Transportation Permit installation approved standards.

☐ Other

ALL PROPER SAFETY REQUIREMENTS SHOULD BE FOLLOWED DURING THE INSTALATION OF THE CULVERT.

135 NE Hernando Ave., Suite B-21
Lake City, FL 32055
Phone: 386-758-1008 Fax: 386-758-2160

Amount Paid 25.00

COLUMBIA COUNTY 9-1-1 ADDRESSING

P. O. Box 1787, Lake City, FL 32056-1787
PHONE: (386) 758-1125 * FAX: (386) 758-1365 * Email: ron_croft@columbiacountyfla.com

Addressing Maintenance

To maintain the Countywide Addressing Policy you must make application for a 9-1-1 Address at the time you apply for a building permit. The established standards for assigning and posting numbers to all principal buildings, dwellings, businesses and industries are contained in Columbia County Ordinance 2001-9. The addressing system is to enable Emergency Service Agencies to locate you in an emergency, and to assist the United States Postal Service and the public in the timely and efficient provision of services to residents and businesses of Columbia County.

DATE REQUESTED: 4/5/2007 **DATE ISSUED:** 4/5/2007

ENHANCED 9-1-1 ADDRESS:

8998 SW STATE ROAD 47

LAKE CITY FL 32024

PROPERTY APPRAISER PARCEL NUMBER:

15-5S-16-03626-320

Remarks:

LOT 20 COLUMBIA CITY HOMESITES UNIT 1

Address Issued By: _____
Columbia County 9-1-1 Addressing / GIS Department

NOTICE: THIS ADDRESS WAS ISSUED BASED ON LOCATION INFORMATION RECEIVED FROM THE REQUESTER. SHOULD, AT A LATER DATE, THE LOCATION INFORMATION BE FOUND TO BE IN ERROR, THIS ADDRESS IS SUBJECT TO CHANGE.

705

Approved Address

APR 13 2007

911Addressing/GIS Dept

Compass Builders Corp

& Associates

197 SW Waterford ct, Ste 106
Lake City, FL 32025
Phone (386) 755-2082
Fax: (386) 752-5047
jake@compass-builders.com

To:	Brian Kepner	Fax:	386-758-2160
From:	Jacob Kirsch	Date:	7/20/07
Re:	Application # 0705-81	Pages:	18

Brian,

Please find attached DOT permit for Columbia Homesites Lot 20

Thanks,
Jacob Kirsch – Cell# 386-344-4817

Lot 20 CH

Florida Department of Transportation
District 2 – Lake City Maintenance

Rev. 8-15-05

F.D.O.T. Permits Office, Lake City Maintenance
Post Office Box 1415
Lake City, Florida 32056-1415

Date: 6-13-2007

Re: Notice of Approved State FDOT Access Connection Permit
Access Permit Category A
Residential Connection

Permitted: Jacob Kirsuh / Compass Builder & Ass. Corp.
Mailing Address: 197 SW Waterford Ste 106 Lake City, Fl.32025
Permit No: 2007-A-292-34 / State Hwy No: 47(S) /Mile Post: 13.864 + -
Road Section No. 29020/ Columbia, County

Mr. Kirsuh

Enclosed within is your approved state access permit applied for previously. I would like to take this opportunity to thank you for your courteous assistance during this time. Cooperation between yourself and our office has allowed us to process your application in a most timely manner, and for this I thank you.

Below is information that if followed can prevent permit and construction problems down the road, please read them carefully and pay special attention to item number 4, 5 and 6.

1.) If you plan to hire a contractor to construct your new access connection (driveway), we would recommend that you make several complete copies of the enclosed connection permit packet and seek at least three bids, as with most things in this life, all contractors are different. A complete listing of all contractors for the county you have permitted too is available on request.

2.) Please take the time to review your new permit package and read all of the permit construction descriptions and requirements as well as the General and any Special Provisions attached, very closely. **State Specifications call for much greater final construction requirements and standards than called for by either city or county government agencies.** Items such as sloped shoulders, mitered end sections, extended radii returns and grass sod are many times over-looked. Be sure to point these items out to those bidding for your business.

3.) Once a contractor is selected and you are ready to activate & Commence construction of the approved connection, you **must contact** The Permits Office here at Lake City Maintenance 48 hours in advance. Be aware that failure to call and activate your approved permit according To this permit provision is legal reason to suspend or revoke the approved Permit. Please take the time to call us to legally activate your permit so all will Go well.

4.) A Final Access Connection Inspection is Mandatory before the new access Can be utilized. We would highly recommend that before making any Final payments to your contractor that you call our office and set up the required FDOT Final Inspection. Contractors who are not willing to accept this pre-Contract agreement may not be worthy of your business. Be aware that you are Legally responsible for liability of the access connection as long as you have not Received a final passing inspection through this office.

5.) **A special note in regards to access permits issued on State Roadways Where the State has future plan for construction or where the State contractor is presently working**: When this is the case, you are Required to make 48 hour advance contact both to our office and the Lake City Construction Office before starting actual construction on your approved access Permit. Please phone 961-7050 to notify them of your intentions, tell them the State highway number on which you are permitted and be specific about your Permitted location Mile Post and permit number. If you decide to activate your Permit and start construction during the on-going FDOT Project and you elect to Hire a contractor other than the on-site FDOT Project contractor, and you must Obtain legal permission from the on-site project supervisor before commencing. All contactors must complete all permitted construction, with a passing FDOT Permits Office inspection within 30 days of the first day of driveway construction. Failure to abide by this permit provision will automatically require the removal of The permitted connection by the State FDOT or On-site Contractor's forces. Neither the FDOT nor the FDOT's on-site project contractor is under any Obligation to construct or complete you're permitted connection unless prior legal Written agreements have been entered into by both parties.

6.) **Special Note about permit validation periods:** Your newly issued permit is Valid for a period of 1 year from the date of original signature from the permits Office, however, as a special provision of this permit, you only have 30 days of Total construction time once you activate the permit and start any type if Driveway construction upon the FDOT Right-of-Way.

No. 6 Continued: To explain this permit provision more clearly, let's say you Activated your new permit to start construction on the first day of the 2nd month of Your approved permit, then all work and the required final passing inspection must Be completed by the first day of the 3rd month (30 days later.) The other 10 months Are not valid after you have officially activated the permits construction Commencement starts date.

The same is true of whatever month you activate your permit. You must start construction in time to be completed within the 30 day period in which you activate the permit, (See Part 3, Permit Approval Section of Page 1 of 3 of the Driveway Connection Permit for All Categories Form No. 850-040-18). Once activated you have only 30 days in which to be completely finished and have received the required final passing FDOT inspection. In most all cases every driveway access permitted can be completed within this 30 day period. **THIS IS A VERY IMPORTANT PERMIT PROVISION, PLEASE READ CAREFULLY. IF YOU DO NOT UNDERSTAND THIS PROVISION YOU SHOULD CONTACT THE FDOT PERMITS OFFICE AND REQUEST FURTHER CLARIFICATION IMMEDIDEATELY UPON READING THESE PERMIT PROVISIONS.**

Important Notice about State and Local County Permits Offices:
If you are planning improvements to your property, please be aware that complete construction of the permitted State FDOT Access Connection with an official final passing FDOT inspection is required before we can release you back to the county government. Once the connection has passed State Inspection the County Government shall be officially notified at which time, you may make county application for property permit improvements.

Well there it is, if you follow the above suggestions both you and the Permits Office can expect all to be in order when the time comes for you to request the final driveway construction inspection. Remember that we here at the Permits Office are always available in case you have a question or problem, about your approved access permit. We also offer driveway layout assistance if requested, please call us!

Sincerely,

Neil E. Miles

Neil E. Miles
Access Permits Coordinator

DRIVEWAY CONNECTION PERMIT FOR ALL CATEGORIES

PART 1: PERMIT INFORMATION

APPLICATION NUMBER: 2007-A-292-34

Permit Category: A Access Classification: 4

Project: RES- DRIVEWAY

Permittee: COMPASS BUILDERS & ASS. CORP. A FL. CORP. / JACOB KIRSUH (REP)

Section/Mile Post: 29020 / 13.864+- State Road: 47

Section/Mile Post: N/A State Road: N/A

PART 2: PERMITTEE INFORMATION

Permittee Name: COMPASS BUILDERS & ASS. A FL. CORP. / JACOB KIRSUH (REP)

Permittee Mailing Address: 197 SW WATERFORD STE. 106

City, State, Zip: LAKE CITY, FL.32025

Telephone: (386)755-2082

Engineer/Consultant/or Project Manager: N/A

Engineer responsible for construction inspection: N/A.
NAME P.E. #

Mailing Address: N/A

City, State, Zip: N/A

Telephone: N/A Mobile Phone N/A

PART 3: PERMIT APPROVAL

The above application has been reviewed and is hereby approved subject to all Provisions as attached.

Permit Number: 2007-A-292-34
Department of Transportation

Signature: Neil E. Miles Title: PERMITS COORDINATOR

Department Representative's Printed Name NEIL E. MILES

Temporary Permit ○ YES ◉ NO (If temporary, this permit is only valid for 6 months)

Special provisions attached ◉ YES ○ NO

Date of Issuance: JUN 13 2007

If this is a normal (non-temporary) permit it authorizes construction for one year from the date of issuance. This can only be extended by the Department as specified in 14-96.007(6).

See following pages for General and Special Provisions

PART 4: GENERAL PROVISIONS

1. Notify the Department of Transportation Maintenance Office at least 48 hours in advance of starting proposed

   Phone: (386) 961-7180 , Attention: NEIL E. MILES, PERMITS COORDINATOR

2. A copy of the approved permit must be displayed in a prominent location in the immediate vicinity of the connection construction.

3. Comply with Rule 14-96.008(1), F.A.C., Disruption of Traffic.

4. Comply with Rule 14-96.008(7), F.A.C., on Utility Notification Requirements.

5. All work performed in the Department's right of way shall be done in accordance with the most current Department standards, specifications and the permit provisions.

6. The permittee shall not commence use of the connection prior to a final inspection and acceptance by the Department.

7. Comply with Rule 14-96.003(3)(a), F.A.C., Cost of Construction.

8. If a Significant Change of the permittee's land use, as defined in Section 335.182, Florida Statutes, occurs, the Permittee must contact the Department.

9. Medians may be added and median openings may be changed by the Department as part of a Construction Project or Safety Project. The provision for a median might change the operation of the connection to be for right turns only.

10. All conditions in NOTICE OF INTENT WILL APPLY unless specifically changed by the Department.

11. All approved connection(s) and turning movements are subject to the Department's continuing authority to modify such connection(s) or turning movements in order to protect safety and traffic operations on the state highway or State Highway System.

12. **Transportation Control Features and Devices in the State Right of Way.** Transportation control features and devices in the Department's right of way, including, but not limited to, traffic signals, medians, median openings, or any other transportation control features or devices in the state right of way, are operational and safety characteristics of the State Highway and are not means of access. The Department may install, remove or modify any present or future transportation control feature or device in the state right of way to make changes to promote safety in the right of way or efficient traffic operations on the highway.

13. The Permittee for him/herself, his/her heirs, his/her assigns and successors in interest, binds and is bound and obligated to save and hold the State of Florida, and the Department, its agents and employees harmless from any and all damages, claims, expense, or injuries arising out of any act, neglect, or omission by the applicant, his/her heirs, assigns and successors in interest that may occur by reason of this facility design, construction, maintenance, or continuing existence of the connection facility,except that the applicant shall not be liable under this provision for damages arising from the sole negligence of the Department.

14. The Permittee shall be responsible for determining and notify all other users of the right of way.

15. Starting work on the State Right of Way means that I am accepting all conditions on the Permit.

PART 5: SPECIAL PROVISIONS

NON-CONFORMING CONNECTIONS: ◉ YES ○ NO

If this is a non-conforming connection permit, as defined in Rule Chapters 14-96 and 14-97, then the following shall be a part of this permit.

1. The non-conforming connection(s) described in this permit is (are) not permitted for traffic volumes exceeding the Permit Category on page 1 of this permit, or as specified in "Other Special Provisions" below.

2. All non-conforming connections will be subject to closure or relocation when reasonable access becomes available in the future.

OTHER SPECIAL PROVISIONS:

REFER TO APPROVED ACCESS PERMIT, GENERAL AND SPECIAL PROVISION SHEET AND THE LEGAL ATTACHED COVER LETTER FOR OFFICIAL DRIVEWAY CONSTRUCTION AND SAFETY SPECIFICATION, AND FDOT APPROVED SITE-PLAN FOR ANY ADDITIONAL INFORMATION NEEDED TO COMPLETE DRIVEWAYS. ALL WORK APPROVED HEREIN UNDER THIS PLAN SHALL BE ACCORDING TO THE STATE FDOT'S MOST CURRENT ROADWAY AND CONSTRUCTION SPECIFICATION AT THE TIME OF ACTUAL CONSTRUCTION AND PERMIT ACTIVATION. UPON ACTIVATION THE PERMIT THE PERMITTEE HAVE (30 DAYS) TO COMPLETE ALL PHASES OF PERMITTED PROJECT. PERMITTEE SHALL ADHERE TO THE FINAL APPROVED SITE-PLAN DATED JUN 12 2007. THIS PERMIT IS FOR (JACOB KIRSUH RES. D/W. ETC).PERMITTEE SHALL NOTIFY THE FDOT PERMITS DEPT FOR PRE-CONSTRUCTION MEETING (BEFORE) ANY WORK ON THE FDOT'S R.O.W. PROJECT CONSIST OF : 12 EARTH LIMEROCK DRIVEWAY WITH DOUBLE 30' TURN RADII. ETC. WHILE WORKING ON THE FDOT'S R.O.W. APPROPRIATE (MOT) SHALL BE IN PLACE CONES, BARACADES, SIGNS, ETC. (ALL) WORKERS WITH IN 15' FEET OF THE EDGE OF THE TRAVEL WAY SUPERVISORS, CREW MEMBERS AND ANY PERSONAL ON THE (FDOTS' R.O.W.) SHALL WEAR ANSI / ISEA CLASS 2 APPAREL (AT ALL TIMES).WORKERS OPERATING MACHINERY OR EQUIPMENT IN WHICH LOOSE CLOTHING COULD BECOME ENTANGLED, SHALL WEAR FITTED H/VISIBLE SAFETY APPAREL. OTHERS WISE

PART 6: APPEAL PROCEDURES

You may petition for an administrative hearing pursuant to sections 120.569 and 120.57, Florida Statutes. If you dispute the facts stated in the foregoing Notice of Intended Department Action (hereinafter Notice), you may petition for a formal administrative hearing pursuant to section 120.57 (1), Florida Statutes. If you agree with the facts stated in the Notice, you may petition for an informal administrative hearing pursuant to section 120. 57(2), Florida Statutes. You must file the petition with:

Clerk of Agency Proceedings
Department of Transportation
Haydon Burns Building
605 Suwannee Street, M.S. 58
Tallahassee, Florida 32399-0458

The petition for an administrative hearing must conform to the requirements of Rule 28-106.201(2) or Rule 28-106.301(2), Florida Administrative Code, and be filed with the Clerk of Agency Proceedings by 5:00 p.m. no later than 21 days after you received the Notice. The petition must include a copy of the Notice, be legible, on 8 1/2 by 11 inch white paper, and contain:

1. Your name, address, telephone number, any Department of Transportation identifying number on the Notice, if known, the name and identification number of each agency affected, if known, and the name, address, and telephone number of your representative, if any, which shall be the address for service purposes during the course of the proceeding.
2. An explanation of how your substantial interests will be affected by the action described in the Notice;
3. A statement of when and how you received the Notice;
4. A statement of all disputed issues of material fact. If there are none, you must so indicate;
5. A concise statement of the ultimate facts alleged, including the specific facts you contend warrant reversal or modification of the agency's proposed action, as well as an explanation of how the alleged facts relate to the specific rules and statutes you contend require reversal or modification of the agency's proposed action;
6. A statement of the relief sought, stating precisely the desired action you wish the agency to take in respect to the agency's proposed action.

If there are disputed issues of material fact a formal hearing will be held, where you may present evidence and argument on all issues involved and conduct cross-examination. If there are no disputed issues of material fact an informal hearing will be held, where you may present evidence or a written statement for consideration by the Department.

Mediation, pursuant to section 120.573, Florida Statutes, may be available if agreed to by all parties, and on such terms as may be agreed upon by all parties. The right to an adminstrative hearing is not affected when mediation does not result in a settlement.

Your petition for an administrative hearing shall be dismissed if it is not in substantial compliance with the above requirements of Rule 28-106.201(2) or Rule 28-106.301(2), Florida Administrative Code. If you fail to timely file your petition in accordance with the above requirements, you will have waived your right to have the intended action reviewed pursuant to chapter 120, Florida Statutes, and the action set forth in the Notice shall be conclusive and final.

FLORIDA DEPARTMENT OF TRANSPORTATION

CHARLIE CRIST
GOVERNOR

STEPHANIE KOPELOUSOS
SECRETARY

PERMITTEE : COMPASS BLD. & ASS. CORP S.R.47 (S) SEC NO:
29020 PERMIT CAT:A M.P. 13.864+-
PROJ. DESCIPTION : 12' E/L D/W D/W 30'T/R..

PERMIT NO: 07-A-292-34

Asst. Maintenance Engineer or Permits Coordinator Approval

NEIL E. MILES, PERMITS COORDINATOR

THE FOLLOWING ARE ADDITIONAL SPECIAL PERMIT PROVISIONS THAT ARE A LEGAL PART OF THIS PERMIT & DO APPLY TO THE ABOVE REFERENCED PERMIT, IF SO MARKED MUST BE COMPLYED WITH IN ADDITIONAL TO THE GENERAL PROVISIONS.

1. XXX All portions of the FDOT right-of-way disturbed during construction under this permit shall be mulched seeded and /or 2 feet of grass sod placed adjacent to the driving lane, or as called for under the approved permit & per FDOT specifications.
2. XXX Permittee shall restore wildflowers disturbed during permitted construction with new seed to be (amount and & method) determined by Mr. Dick Bush, District Landscaping Engineer. Seed shall be delivered to Lake City Maintenance, Permits Office before commencement of permitted placement.
3. XXX The Permittee will contact the appropriate city, county, state government agency; a minimum of forty-eight (48) hours in advance of starting excavation within the area of any signalized intersection.
4. XXX The Permittee can be required to physically relocate (move), as so indicated under this permit at a future date, due to proposed future or on-going FDOT roadway construction planned within the limits of the permitted area.
5. XXX Existing utilities may be located within the construction area. Prior to permit approval, permittee shall locate and notify all utilities within the proposed limits of construction and or permitted area and obtain detailed information from the utility owners as to possible conflicts between utilities and permit tee's work. Permittee shall be responsible for pre & post permit coordination, and all adjustments and shall be solely responsible for resolving any conflicts of utilities, either before or during or after the final permitting. The Permittee shall be solely responsible for any and all damages to existing utilities and/or damage to third parties caused by interference with or damage to existing utilities. The Permittee shall show positive proof that all utility owners with existing interest in the area permitted, have been previously contacted in advance of final permit approval.
6. XXX No business is to be done on FDOT right-of-ways, if vehicles are to be serviced on roadside with pumps, Pump islands must be located at least twelve (12) feet from right-of-way line.
7. XXX Driveway permits are granted to permit access to abutting property only. Parking on right-of-way may be restricted or prohibited.
8. XXX The erection of signs on or overhanging the right-of-way of state roads is not permitted. The connection of any type of subsurface drainage to FDOT storm drains or ditches is prohibited unless by permit or as shown in the general or special provisions of the referenced permit.
9. XXX All Construction and/or Maintenance on the Department's right-of-way shall conform to Federal Manual on Uniform Traffic Control Devices (MUTCD), the Department's most current manual of the Roadway and Traffic Design Standards Specifications for Road and Bridge Construction.
10. XXX Pre and Final Inspections are required by FDOT Permits Office and the assigned inspector.
11. XXX A pre-construction review of the construction planned under the permit shall be mandatory. The Permit tee shall make contact with the Lake City, Permits Office at (904) 961-7180 or 961-7193, a minimum of 48 hours in advance of the Permit tee's planned start date so as to arrange a mutually time to meet. Failure by the Permit tee to meet this requirement can be reason for revocation of the approved permit.
12. XXX If proposed permitted work limits are within a State Roadway Construction Area that is proposed or underway then the permit tee shall schedule commencement date and all planned work under this permit with the State FDOT's contract representative in charge of on-site project operational responsibilities.
13. XXX Final approved permit shall adhere to the signed and sealed plans, with no plan substitutions once approved.

STATE OF FLORIDA DEPARTMENT OF TRANSPORTATION

DRIVEWAY/CONNECTION APPLICATION
CATEGORY A

(INDIVIDUAL HOMES, DUPLEXES OR OTHER USES LESS THAN 20 TRIPS/DAY TOTAL)

850-040-14
SYSTEMS PLANNING
09/02

OFFICE USE ONLY

Application Number: 07-A-292-34

Category: A

Section Road Number & Mile Post: 29020/ 13.864+-

Accepted By DALE L. CRAY
FDOT STAFF (TYPE OR PRINT)

Date: 6-11-2007

APPLICANT COMPLETE REMAINDER OF FORM

PART I: APPLICANT INFORMATION (Please type or print)

APPLICANT: Jacob Kirsch, Compass Builders

Mailing Address: 197 SW Waterford Cr. #106

City, State, Zip: Lake City, FL 32025

Telephone: 386-344-4817, 386-755-2082

Physical Address of Site (if different):

Attach Map & Drawing If Necessary

PROPERTY OWNER: (if different from above) COMPASS BUILDERS & ASS. CORP. A FL.CORP.

Mailing Address:

City, State, Zip:

Telephone:

PART 2: NOTICE TO APPLICANT

Proposed traffic control features and devices in the right of way, such as median openings and other traffic control devices, are not part of the connection(s) to be authorized by a connection permit. The Department reserves the right to change these features in the future in order to promote safety in the right of way or efficient traffic operations on the highway. Expenditure by the applicant of monies for installation or maintenance of such features shall not create any interest in the features or their maintenance.

PART 3: CERTIFICATION AND SIGNATURE

I certify that I am familiar with the information contained in this application and that to the best of my knowledge and belief such information is true, complete and accurate. I will not begin work on the connection until I receive my Permit and I understand all the conditions of the Permit. When I begin work on the connection I am accepting all conditions listed in my Permit.

Signed: [signature] (Applicant) Date: 6/11/07

Printed Name: Jacob Kirsch

Prepared by & Return to:
Matthew D. Rocco
Sierra Title, LLC
619 SW Baya Drive, Suite 102
Lake City, Florida 32025

File Number: 07-0079

Inst:2007006319 Date:03/19/2007 Time:12:57
Doc Stamp-Deed : 245.00
DC,P.DeWitt Cason,Columbia County B:1114 P:68

General Warranty Deed

Made this March 16th, 2007 A.D. By **Nathan W. Griffis, a married man**, 144 SW Thrasher Lane, Lake City, FL 32024, hereinafter called the grantor, to **Compass Builders & Associates Corp., a Florida corporation**, whose post office address is: 197 SW Waterford Court, Ste 105, Lake City, FL 32025, hereinafter called the grantee:

(Whenever used herein the term "grantor" and "grantee" include all the parties to this instrument and the heirs, legal representatives and assigns of individuals, and the successors and assigns of corporations)

Witnesseth, that the grantor, for and in consideration of the sum of Ten Dollars, **($10.00)** and other valuable considerations, receipt whereof is hereby acknowledged, hereby grants, bargains, sells, aliens, remises, releases, conveys and confirms unto the grantee, all that certain land situate in Columbia County, Florida, viz:

Lots 20 and 22, COLUMBIA CITY HOMESITES, UNIT 1, according to the plat thereof, as recorded in Plat Book 5, Page 106, of the Public Records of Columbia County, Florida.

Said property is not the homestead of the Grantor(s) under the laws and constitution of the State of Florida in that neither Grantor(s) or any members of the household of Grantor(s) reside thereon.

Parcel ID Number: R03626-320 and R03626-322

Together with all the tenements, hereditaments and appurtenances thereto belonging or in anywise appertaining.

To Have and to Hold, the same in fee simple forever.

And the grantor hereby covenants with said grantee that the grantor is lawfully seized of said land in fee simple; that the grantor has good right and lawful authority to sell and convey said land; that the grantor hereby fully warrants the title to said land and will defend the same against the lawful claims of all persons whomsoever; and that said land is free of all encumbrances except taxes accruing subsequent to December 31, 2006.

In Witness Whereof, the said grantor has signed and sealed these presents the day and year first above written.

Signed, sealed and delivered in our presence:

Witness Printed Name Matthew D. Rocco

Witness Printed Name Lisa Kraus

Nathan W. Griffis (Seal)
Nathan W. Griffis
Address: 144 SW Thrasher Lane, Lake City, FL 32024

(Seal)
Address:

State of Florida
County of Columbia

The foregoing instrument was acknowledged before me this 16th day of March, 2007, by Nathan W. Griffis, who is/are personally known to me or who has produced a FL Drivers License as identification.

Notary Public
Print Name:

My Commission Expires:

Notary Public State of Florida
Matthew Rocco
My Commission DD578349
Expires 09/17/2010

DEED Individual Warranty Deed With Non-Homestead-Legal on Face
Closers' Choice

Florida Department of Transportation

CHARLIE CRIST
GOVERNOR

OVERNIGHT ADDRESS
710 NW LAKE JEFFERY
SUITE 101, LAKE CITY, FL.
32055-2621

STEPHANIE KOPELOUSOS
INTERIM SECRETARY

STATEMENT OF CONTIGUOUS INTEREST

PROJECT NAME: JACOD KIRSUH' COMPASS BUILDERS & ASS. CORP.

PROJECT LOCATION, (PHY./911ADDRESS): 197 SW WATERFORD CT. STE. 106L.CITY. FL.32025

STATE HIGHWAY: 47 **STATE RD. SECTION** 29020

COUNTY NAME: COL. **STATE MILE POST:** 13.864+-
COUNTY PROPERTY I.D NUMBER REQUIRED: R03626-320
PROPT. OWNER'S NAME (Person or company): COMPASS BUILDERS & ASS.CORP.

OWNER'S MAILING ADDRESS: 197 sw WATERFORD CT. STE.106 LAKE CITY, FL.32025

PERMITTEE'S P.E. COMPANY: N/A
CONTACT P. E. NAME: N/A

ENGINEER'S ADDRESS: N/A

PERMITTEE'S LEGAL REPRESENTATIVE: JACOB KIRSUH

I hereby certify that the total contiguous property owned or controlled is as shown on the officially submitted project's construction Plan and more fully by legal description and attached hereto as exhibit "A".

SIGNED: [signature] **DATE:** 6/11/07

NAME/TITLE: Jacob Kirsch, VP.
ADDRESS: SAME AS ABOVE

Name:	JACOB KIRSUH
County:	COLUMBIA. CO.
S.R. No:	47
Sec. No:	29020
Permit No:	07-A-292-34

48 HOURS BEFORE CALL SUNSH 1-800-432-4770 IT'S THE LAW IN FLORIDA

THIS PERMIT IS FOR A 12' EARTH LIMEROCK DRIVEAWY WITH DOUBLE 30' TURN RADII.DRIVEWAY SHALL REQUIRE (44'LF) OF 18" CMP PIPE. WITH CONCRETE MITERED END PADS.PLEASE REFER TO ATTACHED SHEET FOR CONSTRUCTION DETIALS.

PROCESSED, LAKE CITY MAINT. Due FDOT PERMITS PERMITS DEPT.

FDOT APPROVED
Date: JUN 18

Residential Driveway Rural

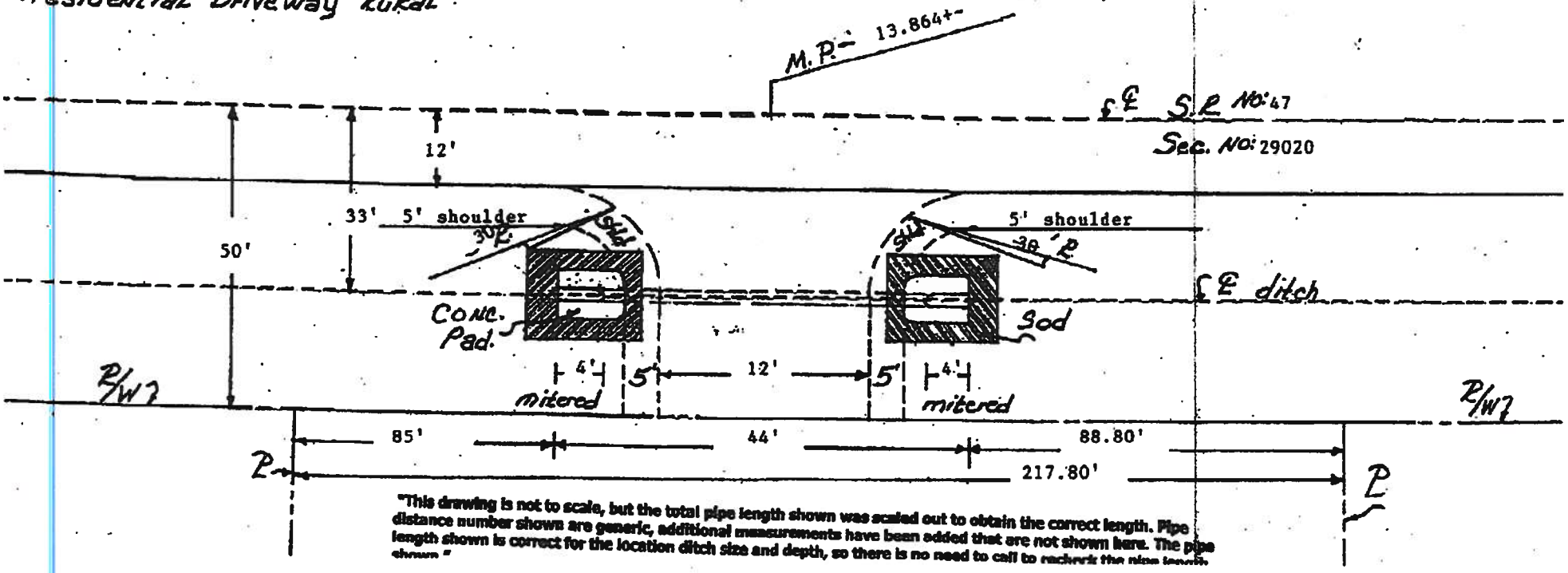

"This drawing is not to scale, but the total pipe length shown was scaled out to obtain the correct length. Pipe distance number shown are generic, additional measurements have been added that are not shown here. The pipe length shown is correct for the location ditch size and depth, so there is no need to call to recheck the pipe length shown."

ACCESS CONNECTION CONSTRUCTION DESCRIPTION

PERMITTEE: JACOB KIRSUH/ COMPASS BUILDERS & ASS. CORP. FDOT ACCESS PERMIT NO. 2007-A-292-34/ CURRENT ADDRESS: 197 SW WATERFORD STE 106 LAKE CITY, FL. 32025/ SECTION NO. 29020/ M.P. 13.864 +- / PERMITTED CO: COLUMBIA CO, PARCELS ACCOUNT NO: RO3626-320 , COLUMBIA COUNTY, FL/ **PROPOSED: 12' FT WIDE,** RESIDENTIAL EARTH LIMEROCK DRIVEWAY WITH DOUBLE **30'** TURNING RADII,. **THE NEW DRIVEWAY SHALL REQUIRE 44' LF OF 18" (CMP) PIPE** (NOTE: IF EXISTING, NO PORTION OF THE ASPHALT PAVED SHOULDER CAN BE USED AS PART OF EITHER TURNOUT RADII. **THE NEW RESIDENTIAL CONNECTION CENTERLINE SHALL BE CONSTRUCTED AT OR APPROXIMATELY **107** LF S OF THE NE PROPERTY CORNER FOR THE ABOVE REFERENCED PROPERTY. ** THE DRIVEWAY SURFACE WILL REGUIRE A MINIMUM OF **6"** INCHES OF CRUSHED LIMEROCK MATERIAL TO FDOT R.O.W LINE. (NO MORE THAN 1 INCH DIA.) COVER OVER ALL TRAVEL SURFACES (INCLUDING DRIVEWAY WIDTH AND BOTH TURNING RADII.) ** THE NEW CONNECTION SHALL ALSO REQUIRE TWO (**2**) FULL **5** FOOT WIDE OR GREATER SLOPED AND STABILIZED EARTH SHOULDERS, (**1:4** GRADE REQUIRED) THOUGHOUT THE ENTIRE TURNING RADII TO THE R/W LINE (NOTE THAT THE SLOPED SHOULDER MUST BE STABILIZED IN PLACE.) ** IF LESS THAN 1:4, BOTH SLOPED AND RADIUSED EARTH SHOULDERS MAY BE SEEDED AND STRAW MULCHED WITH COPIOUS AMOUNTS OF HULLED COASTAL BERMUDA GRASS SEED & BROWN TOP MILLET SEED IN A **40/60 %** MIX. **DRIVEWAYS WITH SLOPES 1:4 OR STEEPER MUST BE GRASSING SODDED.** ** MAINTENANCE OF TRAFFIC SAFETY REQUIREMENTS: A CORRECT MAINTENANCE OF TRAFFIC PLAN SHALL BE REQUIRED TO BE IN PLACE BEFORE ANY TYPE OF WORK CAN COMMENCE UNDER THIS APPROVED PERMIT. ****PERMIT ACTIVATION AND NOTICE INFORMATION: THERE IS A MINIMUM 48-HOUR ADVANCED NOTICE OF PERMIT ACTIVATION REQUIRED FROM THE PERMITTEE TO THE LOCAL FDOT PERMITS OFFICE BEFORE ANY WORK CAN COMMENCE UPON FDOT RIGHT-OF-WAY, CALL 386-961-7180 TO COMPLETE THIS PERMIT PROVISION. A FINAL (PASSING) DRIVEWAY INSPECTION IS MANDATORY BEFORE THE CONNECTION CAN BE UTILIZED, CONTACT FDOT PERMITS A MINIMUM OF 48 HOURS IN ADVANCE OF PROPOSED UTILIZATION DATE FOR FINAL INSPECTION. FAILURE TO CONTACT THE FDOT PERMITS OFFICE CAN RESULT IN PERMIT SUSPENSION OR REMOVAL. CALL 386-961-7180 TO REQUEST THE REQUIRED FINAL INSPECTION. ONCE STARTED YOU HAVE ONLY 30 CONTINUOUS DAYS TO COMPLETE THE DRIVEWAY CONNECTION. REFER TO ITEM NUMBER 6 OF THE ATTACHED COVER LETTER.**

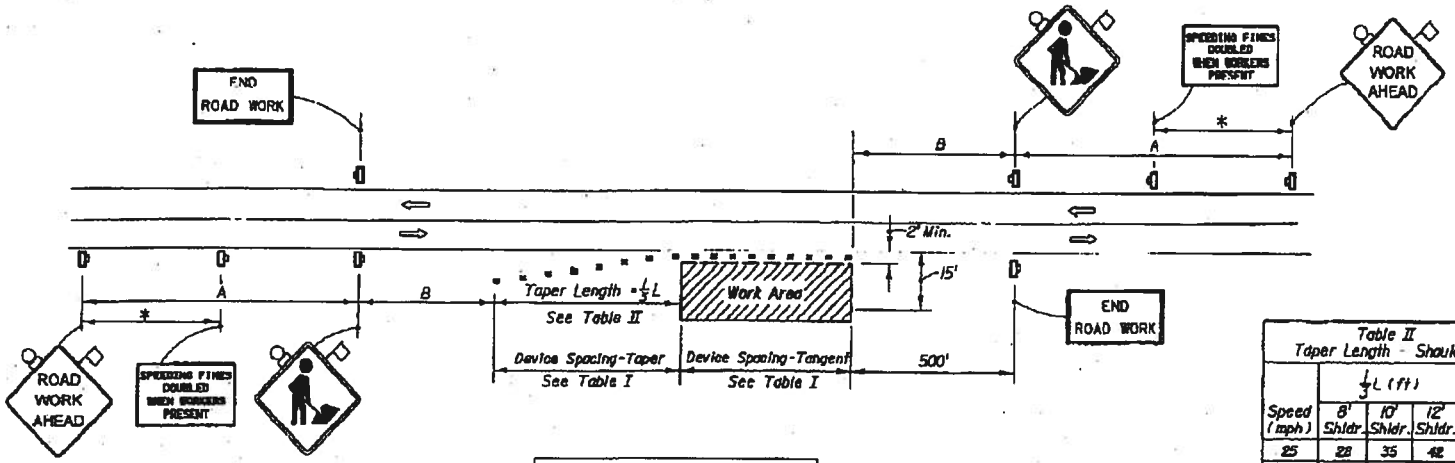

DISTANCE BETWEEN SIGNS		
Speed	Spacing (ft)	
	A	B
40 mph or less	200	200
45 mph	350	350
50 mph or greater	500	500

* 500' beyond the ROAD WORK AHEAD sign or midway between signs whichever is less.

Table I Device Spacing				
Speed (mph)	Max. Distance Between Devices (ft)			
	Cones or Tubular Markers		Type I or Type II Barricades or Vertical Panels or Drums	
	Taper	Tangent	Taper	Tangent
25	25	50	25	50
30 to 45	25	50	30	50
50 to 70	25	50	50	100

Table II Taper Length - Shoulder				
Speed (mph)	⅓L (ft)			Notes
	8' Shldr.	10' Shldr.	12' Shldr.	
25	28	35	42	$L=\frac{WS^2}{60}$
30	40	50	60	
35	55	68	82	
40	72	90	107	
45	120	150	180	L=WS
50	133	167	200	
55	147	183	220	
60	160	200	240	
65	173	217	260	
70	187	233	280	

8' minimum shoulder width.

⅓L - Length of shoulder taper in feet

W - Width of total shoulder in feet (combined paved and unpaved width)

S - Posted speed limit (mph)

SYMBOLS

- Work Area
- Sign With 18" x 18" (Min.) Orange Flag And Type B Light
- Channelizing Device (See Index No. 600)
- Work Zone Sign
- Lane Identification + Direction of Traffic

GENERAL NOTES

1. All vehicles, equipment, workers (except flaggers), and their activities are restricted to one side of the roadway.
2. When four or more work vehicles enter the through traffic lanes in a one hour period or less (excluding establishing and terminating the work area), the advanced FLAGGER sign shall be substituted for the WORKERS sign. For location of flaggers and FLAGGER signs, see Index No. 603.
3. WORKERS sign to be removed or fully covered when no work is being performed.
4. SHOULDER WORK sign may be used as an alternate to the WORKER symbol sign only on the side where the shoulder work is being performed.
5. When a side road intersects the highway within the TTC zone, additional TTC devices shall be placed in accordance with other applicable TCZ indexes.
6. For general TCZ requirements and additional information refer to Index No. 600.

DURATION NOTES

1. Signs and channelizing devices may be omitted if all of the following conditions are met:
   a) Work operations are 60 minutes or less.
   b) Vehicles in the work area have high-intensity, rotating, flashing, oscillating, or strobe lights operating.

CONDITIONS

WHERE ANY VEHICLE, EQUIPMENT, WORKERS OR THEIR ACTIVITIES ENCROACH THE AREA CLOSER THAN 15' BUT NOT CLOSER THAN 2' TO THE EDGE OF TRAVEL WAY.

2006 FDOT Design Standards

TWO-LANE TWO-WAY, WORK ON SHOULDER

Last Revision 07/01/05 | Sheet No. 1 of 1 | Index No. 602

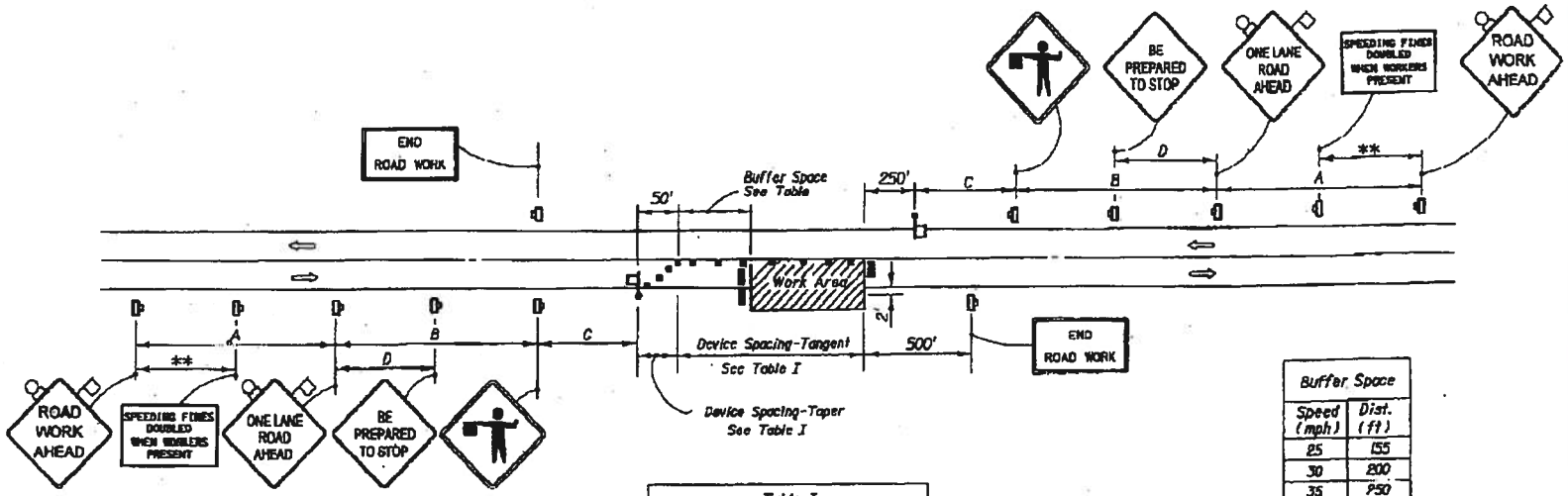

DISTANCE BETWEEN SIGNS				
Speed	Spacing (ft)			
	A	B	C	D ***
40 mph or less	200	200	200	100
45 mph	350	350	350	175
50 mph	500	500	500	250
*55 mph or greater	2640	1640	1000	500

* The ROAD WORK 1 MILE sign may be used as an alternate to the ROAD WORK AHEAD sign.

** 500' beyond the ROAD WORK AHEAD sign or midway between signs whichever is less.

*** BE PREPARED TO STOP sign may be omitted for speeds at 45 MPH or less.

Table I Device Spacing				
Speed (mph)	Max. Distance Between Devices (ft)			
	Cones or Tubular Markers		Type I or Type II Barricades or Vertical Panels or Drums	
	Taper	Tangent	Taper	Tangent
25 to 45	20	50	20	50
50 to 70	20	50	20	100

Buffer Space	
Speed (mph)	Dist. (ft)
25	155
30	200
35	250
40	305
45	360
50	425
55	495
60	570
65	645
70	730

When Buffer Space cannot be attained due to geometric constraints, the greatest attainable length shall be used, but not less than 200 ft.

SYMBOLS

Work Area

Sign With 18" x 18" (Min.) Orange Flag And Type B Light

Type I, Type II Or Type III Barricade Or Vertical Panel Or Drum

Channelizing Device (See Index No. 600)

Work Zone Sign

Flagger

Lane Identification + Direction of Traffic

GENERAL NOTES

1. Work operations shall be confined to one traffic lane, leaving the opposite lane open to traffic.
2. All vehicles, equipment, workers (except flaggers), and their activities are restricted to one side of the roadway.
3. Additional one-way control may be effected by the following means:
   (1) Flag-carrying vehicle; (2) Official vehicle; (3) Pilot vehicles; (4) Traffic signals.

   When flaggers are the sole means of one-way control the flaggers shall be in sight of each other or in direct communication at all times.
4. The ONE-LANE ROAD signs are to be fully covered and the FLAGGER signs either removed or fully covered when no work is being performed and the highway is open to two-way traffic.
5. When a side road intersects the highway within the TTC zone, additional TTC devices shall be placed in accordance with other applicable TCZ indexes.
6. The two channelizing devices directly in front of the work area and the one channelizing device directly at the end of the work area may be omitted provided vehicles in the work area have high-intensity rotating, flashing, oscillating, or strobe lights operating.
7. For general TCZ requirements and additional information, refer to Index No. 600.

DURATION NOTES

1. ROAD WORK AHEAD and the BE PREPARED TO STOP signs may be omitted if all of the following conditions are met:
   a) Work operations are 60 minutes or less.
   b) Speed limit is 45 mph or less.
   c) No sight obstructions to vehicles approaching the work area for a distance equal to the buffer space.
   d) Vehicles in the work area have high-intensity, rotating, flashing, oscillating, or strobe lights operating.
   e) Volume and complexity of the roadway has been considered.

CONDITIONS

WHERE ANY VEHICLE, EQUIPMENT, WORKERS OR THEIR ACTIVITIES ENCROACH THE AREA BETWEEN THE CENTERLINE AND A LINE 2' OUTSIDE THE EDGE OF TRAVEL WAY.

2006 FDOT Design Standards

TWO-LANE TWO-WAY, WORK WITHIN THE TRAVEL WAY

Last Revision	Sheet No.
07/01/05	1 of 1
Index No. 603	

Form 350-080-32
Comptroller
General Accounting

RECORD OF SALE OF GOODS OR SERVICE/RECEIPT TRANSMITTAL

DISTRICT OFFICE 2/Maintenance **CUSTODIAN NO.** _____

83781

SOLD TO:

NAME: Jacob Kirsuh/Compass Builders &Ass.

ADDRESS: 197 SW Waterford CT. Ste 106

Lake City, FL 32025

DELIVERY:

☐ PICK UP: _____ RECEIVED BY (SIGNATURE)

☐ SHIP TO:

SOLD TO ADDRESS:

CONTACT:

TELEPHONE NO.

PAYMENT METHOD

☒ INDIVIDUAL SALE: AMOUNT OF CHECK $ 50.00 AND / OR AMOUNT OF CASH $

☐ BATCH TRANSMITTAL: AMOUNT OF CHECKS $ AND / OR AMOUNT OF CASH $

☐ SALE ON ACCOUNT: ACCOUNT # (Send copy to Accounts Receivable - MS 42)

DESCRIPTION OF SALE(S)

DESCRIPTION OF SALE	UNIT PRICE	SUBTOTAL	SALES TAX	DISCRET. TAX	TOTAL
Connection Fee	50.00				50.00
P# 07-A-292-34					
GRAND TOTAL					50.00

TRANSACTION AUTHORIZED BY:

Rana Crawford — PRINT NAME

(386) 961-7180 — TELEPHONE NO.

Rana Crawford — SIGNATURE

6-11-07 — DATE

IF SALE ON ACCOUNT PERSON AUTHORIZING SALE

PRINT NAME

TELEPHONE NO.

SIGNATURE

DATE

COST DISTRIBUTION

ORGANIZATION CODE	EO	OBJECT	AMOUNT	FINANCIAL PROJ. (11 DIGITS)	B	EOB
55-910200000	HM	004029	50.00	2139401A102	1	393

Original, Cashier's Office, or Accounts Receivable (if sale on Account) MS 42 Copies - (1) Customer (1) Financial Reporting, MS 42 (1) Retained in Custodial Office

STATE OF FLORIDA DEPARTMENT OF TRANSPORTATION

RECEIPT OF CONNECTION APPLICATION AND FEE (OR WAIVER OF FEE)

850-040-16
SYSTEMS PLANNING
06/06

IMPORTANT NOTE: Even though your application has been accepted, it may not be complete. We will contact you if more information is needed.

(1) APPLICATION NUMBER: 07-A-292-34

APPLICANT:

(2) Name/Address JACOB KIRSUH/ COMPASS BUILDERS & ASS. CORP.
197 SW WATERFORD CT, STE 106
LAKE CITY, FL 32025

(3) Project Name: JACOB KIRSUH (RES- DRIVEWAY)

(4) Fee

		VEHICLES PER DAY	FEE
◉	Category A	1-20	$50.00
○	Category B	21-600	$250.00
○	Category C	601-1,200	$1,000.00
○	Category D	1,201-4,000	$2,000.00
○	Category E	4,001-10,000	$3,000.00
○	Category F	10,001-30,000	$4,000.00
○	Category G	30,001 +	$5,000.00
○	Temporary		$250.00
○	Safety		NO FEE
○	Government Entity		NO FEE

RECEIPT NO.: 83781

(5) Application Fee Collected $ 50.00

Payment Type:
Money Order ○
Check ◉ Check Number 11162
Cash ○

(6) Fee Collected By
Name DALE L. CRAY
Signature [signature]
Date: 6-11-07 District 2 Unit 292

(7) Receipt Given Back to Applicant Via
○ Hand Delivery ○ Mail ○ Courier Service ○ Other
Applicant (or Agent) Signature (if available)

This form bears your application number and serves as your receipt.

(8) If fee is waived, give justification below or on separate sheet.

FOR AGENCY USE ONLY - ATTACH COPY OF CHECK ON THE NEXT PAGE
Make Checks payable to: State of Florida Department of Transportation

DIMENSIONS &

D	X	A	B	C	E	F	G	H ■	M Single Pipe	M Double Pipe	M Triple Pipe	M Quad. Pipe	
8"	2'-0"	2.5'	0.72'	3.22'	0.7'	4.0'	0.58'	3.3'	3.75'	5.75'	7.75'	9.75'	1.
10"	2'-2"	2.5'	1.34'	3.84'	1.3'	5.0'	0.81'	3.7'	3.92'	6.08'	8.25'	10.41'	1.
12"	2'-4"	2.5'	2.06'	4.56'	2.0'	6.0'	1.00'	4.0'	4.08'	6.42'	8.75'	11.08'	1.
15"	2'-7"	2.5'	3.09'	5.59'	3.0'	7.0'	1.23'	4.0'	4.33'	6.92'	9.50'	12.08'	1.
18"	2'-10"	2.5'	4.12'	6.62'	4.0'	8.0'	1.41'	4.0'	4.58'	7.42'	10.25'	13.08'	1.
24"	3'-5"	2.5'	6.18'	8.68'	6.0'	10.0'	1.73'	4.0'	5.08'	8.50'	11.92'	15.33'	1.
30"	4'-3"	2.5'	8.25'	10.75'	8.0'	12.0'	2.00'	4.0'	5.58'	9.83'	14.08'	18.33'	1.
36"	5'-1"	2.5'	10.31'	12.81'	10.0'	14.0'	2.24'	4.0'	6.08'	11.17'	16.25'	21.33'	1.
42"	6'-0"	2.5'	12.37'	14.87'	12.0'	16.0'	2.45'	4.0'	6.58'	12.58'	18.58'	24.58'	1.
48"	6'-9"	2.5'	14.43'	16.93'	14.0'	18.0'	2.65'	4.0'	7.08'	13.83'	20.58'	27.33'	1.
54"	7'-8"	2.5'	16.49'	18.99'	16.0'	20.0'	2.83'	4.0'	7.58'	15.25'	22.92'	30.58'	1.
60"	8'-6"	2.5'	18.55'	21.05'	18.0'	22.0'	3.00'	4.0'	8.08'	16.58'	25.08'	33.58'	1.

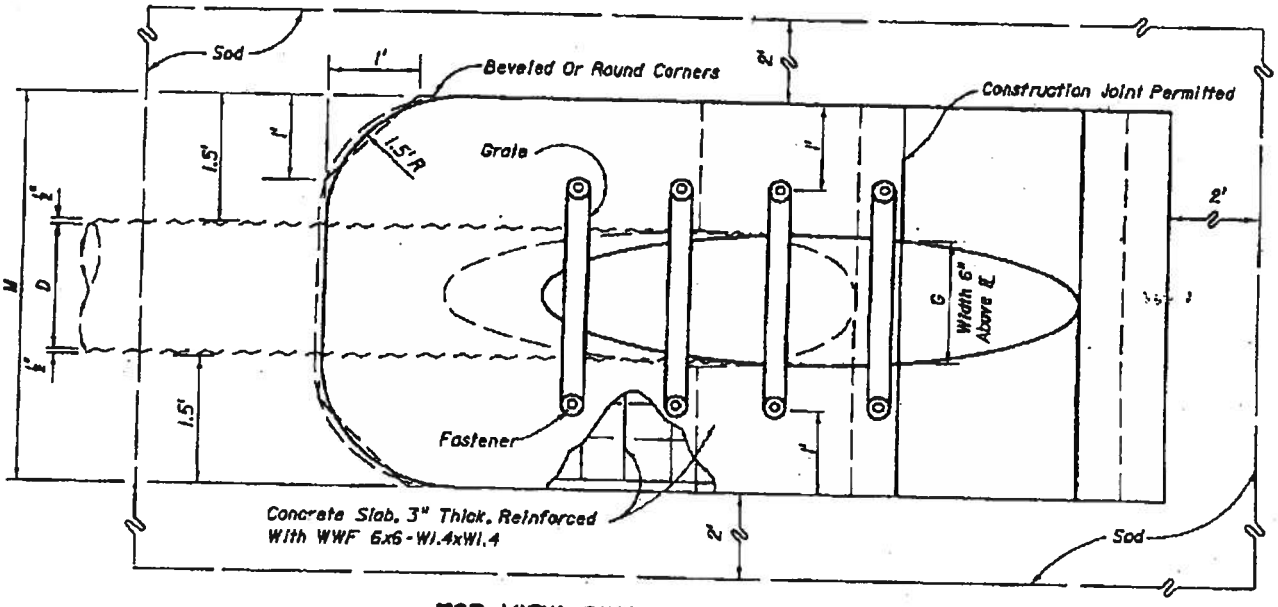

TOP VIEW-SINGLE PIPE

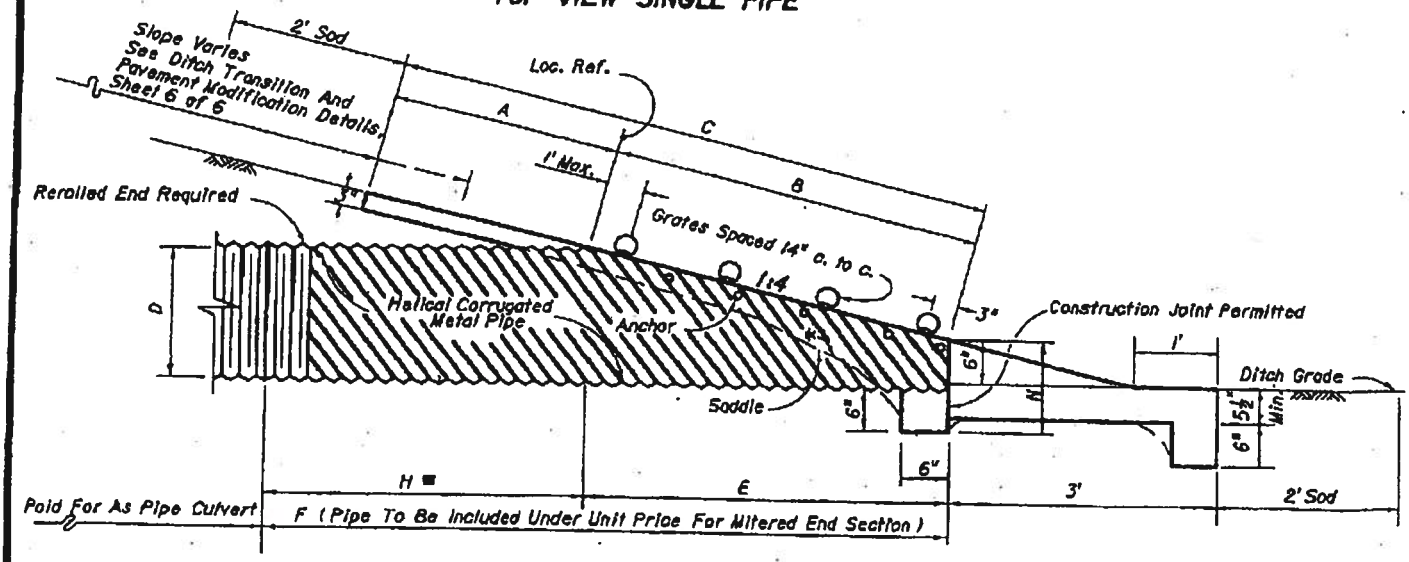

SECTION

Client#: 69233 HOMBY

ACORD™ CERTIFICATE OF LIABILITY INSURANCE

DATE (MM/DD/YYYY) 07/20/07

PRODUCER
Advanced Insurance Und. (10)
P.O. Box 6
% Scot Brown
Ocala, FL 34478

THIS CERTIFICATE IS ISSUED AS A MATTER OF INFORMATION ONLY AND CONFERS NO RIGHTS UPON THE CERTIFICATE HOLDER. THIS CERTIFICATE DOES NOT AMEND, EXTEND OR ALTER THE COVERAGE AFFORDED BY THE POLICIES BELOW.

INSURED
Homes By Whittaker, Inc.
PO Box 771149
OCALA, FL 34477-1149

INSURERS AFFORDING COVERAGE	NAIC #
INSURER A: General Fidelity Insurance Company	
INSURER B: Bridgefield Casualty Insurance	
INSURER C:	
INSURER D:	
INSURER E:	

COVERAGES

THE POLICIES OF INSURANCE LISTED BELOW HAVE BEEN ISSUED TO THE INSURED NAMED ABOVE FOR THE POLICY PERIOD INDICATED. NOTWITHSTANDING ANY REQUIREMENT, TERM OR CONDITION OF ANY CONTRACT OR OTHER DOCUMENT WITH RESPECT TO WHICH THIS CERTIFICATE MAY BE ISSUED OR MAY PERTAIN, THE INSURANCE AFFORDED BY THE POLICIES DESCRIBED HEREIN IS SUBJECT TO ALL THE TERMS, EXCLUSIONS AND CONDITIONS OF SUCH POLICIES. AGGREGATE LIMITS SHOWN MAY HAVE BEEN REDUCED BY PAID CLAIMS.

INSR LTR	ADD'L INSRD	TYPE OF INSURANCE	POLICY NUMBER	POLICY EFFECTIVE DATE (MM/DD/YY)	POLICY EXPIRATION DATE (MM/DD/YY)	LIMITS	
A		GENERAL LIABILITY X COMMERCIAL GENERAL LIABILITY CLAIMS MADE X OCCUR X BI/PD Ded:1,000 GEN'L AGGREGATE LIMIT APPLIES PER: POLICY PRO-JECT LOC	BAG0004133	07/17/07	07/17/08	EACH OCCURRENCE	$1,000,000
						DAMAGE TO RENTED PREMISES (Ea occurrence)	$100,000
						MED EXP (Any one person)	$5,000
						PERSONAL & ADV INJURY	$1,000,000
						GENERAL AGGREGATE	$2,000,000
						PRODUCTS - COMP/OP AGG	$2,000,000
		AUTOMOBILE LIABILITY ANY AUTO ALL OWNED AUTOS SCHEDULED AUTOS HIRED AUTOS NON-OWNED AUTOS				COMBINED SINGLE LIMIT (Ea accident)	$
						BODILY INJURY (Per person)	$
						BODILY INJURY (Per accident)	$
						PROPERTY DAMAGE (Per accident)	$
		GARAGE LIABILITY ANY AUTO				AUTO ONLY - EA ACCIDENT	$
						OTHER THAN AUTO ONLY: EA ACC	$
						AGG	$
		EXCESS/UMBRELLA LIABILITY OCCUR CLAIMS MADE				EACH OCCURRENCE	$
						AGGREGATE	$
							$
		DEDUCTIBLE					$
		RETENTION $					$
B		WORKERS COMPENSATION AND EMPLOYERS' LIABILITY ANY PROPRIETOR/PARTNER/EXECUTIVE OFFICER/MEMBER EXCLUDED? If yes, describe under SPECIAL PROVISIONS below	83017605000	04/01/07	04/01/08	X WC STATU-TORY LIMITS OTH-ER	
						E.L. EACH ACCIDENT	$500,000
						E.L. DISEASE - EA EMPLOYEE	$500,000
						E.L. DISEASE - POLICY LIMIT	$500,000
		OTHER					

DESCRIPTION OF OPERATIONS / LOCATIONS / VEHICLES / EXCLUSIONS ADDED BY ENDORSEMENT / SPECIAL PROVISIONS

CERTIFICATE HOLDER

Columbia County Bldg Dept
PO Drawer 1529
Lake City, FL 32056

CANCELLATION

SHOULD ANY OF THE ABOVE DESCRIBED POLICIES BE CANCELLED BEFORE THE EXPIRATION DATE THEREOF, THE ISSUING INSURER WILL ENDEAVOR TO MAIL 30 DAYS WRITTEN NOTICE TO THE CERTIFICATE HOLDER NAMED TO THE LEFT, BUT FAILURE TO DO SO SHALL IMPOSE NO OBLIGATION OR LIABILITY OF ANY KIND UPON THE INSURER, ITS AGENTS OR REPRESENTATIVES.

AUTHORIZED REPRESENTATIVE

© ACORD CORPORATION 1988

Parcel 15-545-16-05626-322

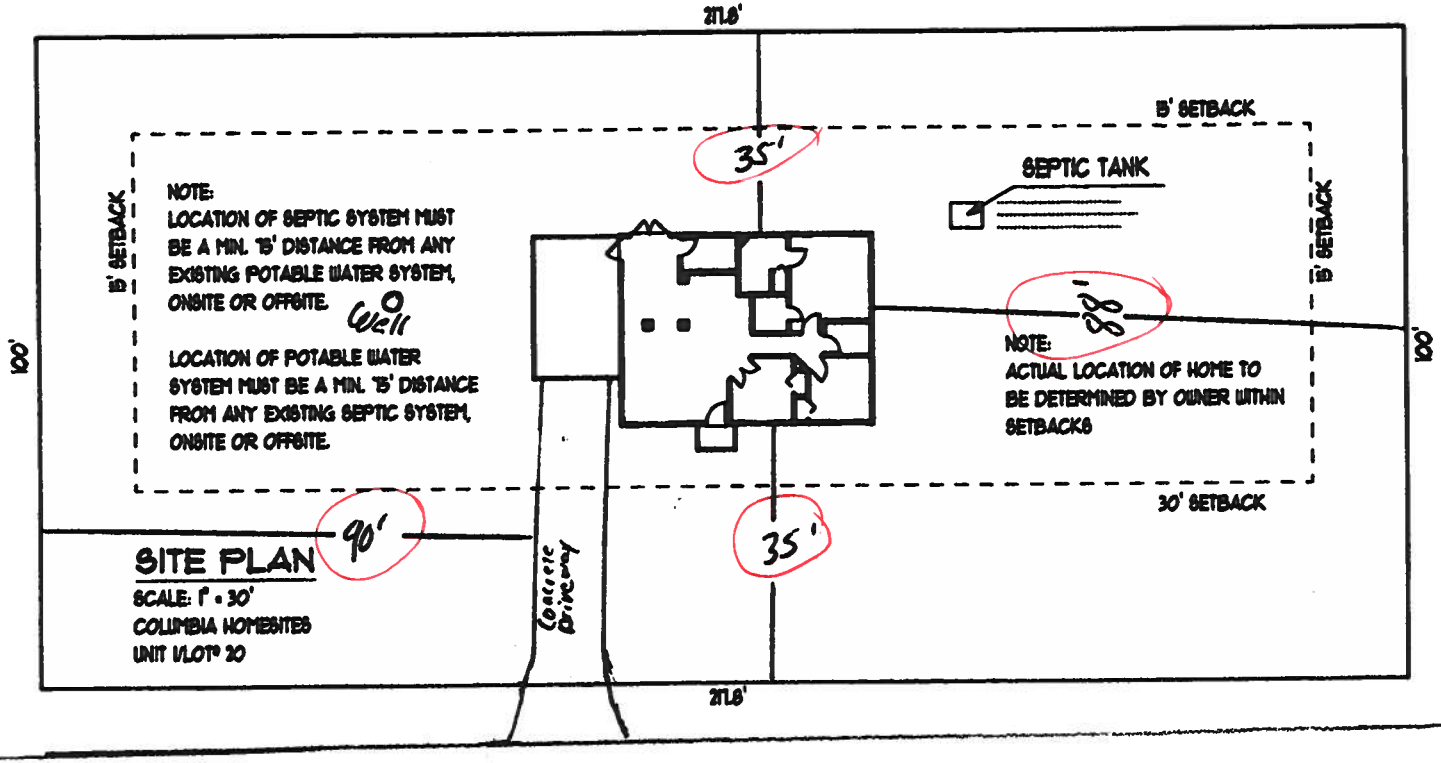

U.S. HWY 47

Prepared by & Return to:
Matthew D. Rocco
Sierra Title, LLC
619 SW Baya Drive, Suite 102
Lake City, Florida 32025

File Number: 07-0079

Inst:2007006319 Date:03/19/2007 Time:12:57
Doc Stamp-Deed : 245.00
DC,P.DeWitt Cason,Columbia County B:1114 P:68

General Warranty Deed

Made this March 16th, 2007 A.D. By **Nathan W. Griffis, a married man**, 144 SW Thrasher Lane, Lake City, FL 32024, hereinafter called the grantor, to **Compass Builders & Associates Corp., a Florida corporation**, whose post office address is: 197 SW Waterford Court, Ste 105, Lake City, FL 32025, hereinafter called the grantee:

(Whenever used herein the term "grantor" and "grantee" include all the parties to this instrument and the heirs, legal representatives and assigns of individuals, and the successors and assigns of corporations)

Witnesseth, that the grantor, for and in consideration of the sum of Ten Dollars, ($10.00) and other valuable considerations, receipt whereof is hereby acknowledged, hereby grants, bargains, sells, aliens, remises, releases, conveys and confirms unto the grantee, all that certain land situate in Columbia County, Florida, viz:

Lots 20 and 22, COLUMBIA CITY HOMESITES, UNIT 1, according to the plat thereof, as recorded in Plat Book 5, Page 106, of the Public Records of Columbia County, Florida.

Said property is not the homestead of the Grantor(s) under the laws and constitution of the State of Florida in that neither Grantor(s) or any members of the household of Grantor(s) reside thereon.

Parcel ID Number: R03626-320 and R03626-322

Together with all the tenements, hereditaments and appurtenances thereto belonging or in anywise appertaining.

To Have and to Hold, the same in fee simple forever.

And the grantor hereby covenants with said grantee that the grantor is lawfully seized of said land in fee simple; that the grantor has good right and lawful authority to sell and convey said land; that the grantor hereby fully warrants the title to said land and will defend the same against the lawful claims of all persons whomsoever; and that said land is free of all encumbrances except taxes accruing subsequent to December 31, 2006.

In Witness Whereof, the said grantor has signed and sealed these presents the day and year first above written.

Signed, sealed and delivered in our presence:

Witness Printed Name Matthew D. Rocco

Witness Printed Name Lisa Kraus

Nathan W. Griffis (Seal)
Nathan W. Griffis
Address: 144 SW Thrasher Lane, Lake City, FL 32024

(Seal)
Address:

State of Florida
County of Columbia

The foregoing instrument was acknowledged before me this 16th day of March, 2007, by Nathan W. Griffis, who is/are personally known to me or who has produced a FL Drivers License as identification.

Notary Public
Print Name:

My Commission Expires:

Notary Public State of Florida
Matthew Rocco
My Commission DD578349
Expires 09/17/2010

STATE OF FLORIDA
DEPARTMENT OF HEALTH

APPLICATION FOR ONSITE SEWAGE DISPOSAL SYSTEM CONSTRUCTION PERMIT

Permit Application Number 07-0399

PART II - SITE PLAN

Scale: Each block represents 5 feet and 1 inch = 50 feet.

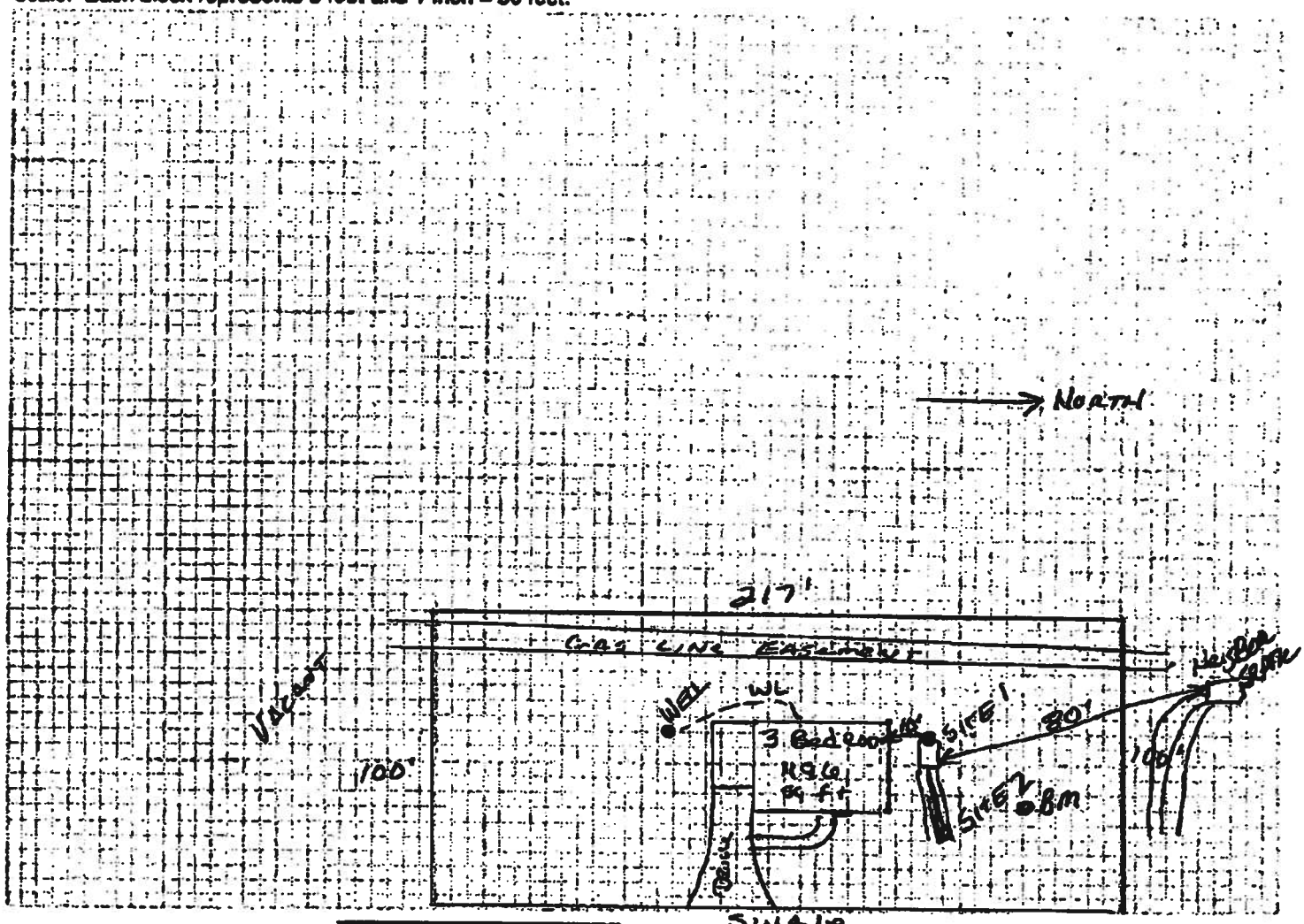

Notes:

LOT 20 UNIT 1

Columbia City Home Sites

Compass Builders Jake Kirsch

Site Plan submitted by: Robert W. Jack (Signature) Agent (Title)

Plan Approved ✓ Not Approved _____ Date 5/22/07

By [illegible] Columbia County Health Department

ALL CHANGES MUST BE APPROVED BY THE COUNTY HEALTH DEPARTMENT

DH 4015, 10/98 (Replaces HRS-H Form 4015 which may be used)
(Stock Number: 5744-002-4015-9)

Water Wells
Pumps & Service

Phone: (386) 752-6677
Fax: (386) 752-1477

Lynch Well Drilling, Inc.
173 SW Young Place
Lake City, FL 32025
www.lynchwelldrilling.com

April 12, 2007

Columbia County Building Department
P. O. Box 1529
Lake City, Fl. 32056

To Whom It May Concern:

As required by building code regulations for Columbia County in order that a building permit can be issued, the following well information is provided with regard to the above-referenced well:

Size of Pump Motor:	1 Horse Power
Size of Pressure Tank:	81-Gallon Bladder Tank
Cycle Stop Valve Used:	No

Should you require any additional information, please contact us.

Sincerely,

Linda Newcomb

Linda Newcomb
Lynch Well Drilling, Inc.

FORM 600A-2004 EnergyGauge® 4.0

FLORIDA ENERGY EFFICIENCY CODE FOR BUILDING CONSTRUCTION

Florida Department of Community Affairs

Residential Whole Building Performance Method A

Project Name:	**The Thomas**	Builder:	**Compass Builders**
Address:	**Lot: 20, Sub: Col. Home sites, Plat:**	Permitting Office:	
City, State:	**Lake City, FL**	Permit Number:	
Owner:	**Compass Builders**	Jurisdiction Number:	
Climate Zone:	**North**		

1. New construction or existing	New	__
2. Single family or multi-family	Single family	__
3. Number of units, if multi-family	1	__
4. Number of Bedrooms	3	__
5. Is this a worst case?	Yes	__
6. Conditioned floor area (ft²)	1196 ft²	__
7. Glass type[1] and area: (Label reqd. by 13-104.4.5 if not default)		
a. U-factor: (or Single or Double DEFAULT)	Description Area 7a. (Dble Default) 120.5 ft²	__
b. SHGC: (or Clear or Tint DEFAULT)	7b. (Clear) 120.5 ft²	__
8. Floor types		
a. Slab-On-Grade Edge Insulation	R=0.0, 232.0(p) ft	__
b. N/A		__
c. N/A		__
9. Wall types		
a. Frame, Wood, Exterior	R=13.0, 1972.0 ft²	__
b. Frame, Wood, Adjacent	R=13.0, 120.0 ft²	__
c. N/A		__
d. N/A		__
e. N/A		__
10. Ceiling types		__
a. Under Attic	R=30.0, 1196.0 ft²	
b. N/A		__
c. N/A		__
11. Ducts		__
a. Sup: Unc. Ret: Unc. AH: Interior	Sup. R=6.0, 92.0 ft	
b. N/A		__
		__

12. Cooling systems		
a. Central Unit	Cap: 24.0 kBtu/hr	__
	SEER: 13.00	__
b. N/A		__
		__
c. N/A		__
		__
13. Heating systems		
a. Electric Heat Pump	Cap: 24.0 kBtu/hr	__
	HSPF: 7.20	__
b. N/A		__
		__
c. N/A		__
		__
14. Hot water systems		
a. Electric Resistance	Cap: 50.0 gallons	__
	EF: 0.92	__
b. N/A		__
		__
c. Conservation credits (HR-Heat recovery, Solar DHP-Dedicated heat pump)		__
15. HVAC credits (CF-Ceiling fan, CV-Cross ventilation, HF-Whole house fan, PT-Programmable Thermostat, MZ-C-Multizone cooling, MZ-H-Multizone heating)	CF,	__

Glass/Floor Area: 0.19

Total as-built points: 22662
Total base points: 23369

PASS

I hereby certify that the plans and specifications covered by this calculation are in compliance with the Florida Energy Code.

PREPARED BY: _____

DATE: 4-4-07

I hereby certify that this building, as designed, is in compliance with the Florida Energy Code.

OWNER/AGENT: _____

DATE: _____

Review of the plans and specifications covered by this calculation indicates compliance with the Florida Energy Code. Before construction is completed this building will be inspected for compliance with Section 553.908 Florida Statutes.

GREAT SEAL OF THE STATE OF FLORIDA — IN GOD WE TRUST

BUILDING OFFICIAL: _____

DATE: _____

1 Predominant glass type. For actual glass type and areas, see Summer & Winter Glass output on pages 2&4.

SUMMER CALCULATIONS

Residential Whole Building Performance Method A - Details

ADDRESS: **Lot: 20, Sub: Col. Home sites, Plat: , Lake City, FL,** PERMIT #:

BASE				AS-BUILT							
GLASS TYPES .18 X Conditioned Floor Area	X BSPM	= Points		Type/SC	Overhang Ornt	Len	Hgt	Area X	SPM X	SOF	= Points
.18	1196.0	20.04	4314.2	Double, Clear	NW	1.5	6.0	60.0	25.97	0.93	1442.2
				Double, Clear	SW	1.5	6.0	50.0	40.16	0.89	1777.2
				Double, Clear	SW	1.5	6.0	15.0	40.16	0.89	533.2
				Double, Clear	SE	1.5	6.0	15.0	42.75	0.88	566.5
				Double, Clear	SE	1.5	6.0	20.0	42.75	0.88	755.3
				Double, Clear	NE	1.5	6.0	60.0	29.56	0.92	1632.5
				Double, Clear	NE	1.5	4.5	10.5	29.56	0.86	267.9
				As-Built Total:				**230.5**			**6974.7**

WALL TYPES	Area X	BSPM =	Points	Type	R-Value	Area X	SPM =	Points
Adjacent	120.0	0.70	84.0	Frame, Wood, Exterior	13.0	1972.0	1.50	2958.0
Exterior	1972.0	1.70	3352.4	Frame, Wood, Adjacent	13.0	120.0	0.60	72.0
Base Total:	**2092.0**		**3436.4**	**As-Built Total:**		**2092.0**		**3030.0**

DOOR TYPES	Area X	BSPM =	Points	Type	Area X	SPM =	Points
Adjacent	18.0	2.40	43.2	Adjacent Wood	18.0	2.40	43.2
Exterior	60.0	6.10	366.0	Exterior Wood	60.0	6.10	366.0
Base Total:	**78.0**		**409.2**	**As-Built Total:**	**78.0**		**409.2**

CEILING TYPES	Area X	BSPM =	Points	Type	R-Value	Area X	SPM X SCM =	Points
Under Attic	1196.0	1.73	2069.1	Under Attic	30.0	1196.0	1.73 X 1.00	2069.1
Base Total:	**1196.0**		**2069.1**	**As-Built Total:**		**1196.0**		**2069.1**

FLOOR TYPES	Area X	BSPM =	Points	Type	R-Value	Area X	SPM =	Points
Slab	232.0(p)	-37.0	-8584.0	Slab-On-Grade Edge Insulation	0.0	232.0(p	-41.20	-9558.4
Raised	0.0	0.00	0.0					
Base Total:			**-8584.0**	**As-Built Total:**		**232.0**		**-9558.4**

INFILTRATION	Area X	BSPM =	Points	Area X	SPM =	Points
	1196.0	10.21	12211.2	1196.0	10.21	12211.2

SUMMER CALCULATIONS

Residential Whole Building Performance Method A - Details

ADDRESS: **Lot: 20, Sub: Col. Home sites, Plat: , Lake City, FL,** PERMIT #:

BASE				AS-BUILT							
Summer Base Points: 13856.1				**Summer As-Built Points:**							**15135.8**
Total Summer Points	X	System Multiplier	=	Cooling Points	Total Component (System - Points)	X	Cap Ratio	X	Duct Multiplier (DM x DSM x AHU)	X	System Multiplier	X	Credit Multiplier	=	Cooling Points
					(sys 1: Central Unit 24000 btuh ,SEER/EFF(13.0) Ducts:Unc(S),Unc(R),Int(AH),R6.0(INS)										
					15136		1.00		(1.09 x 1.147 x 0.91)		0.263		0.950		4294.9
13856.1		**0.4266**		**5911.0**	**15135.8**		**1.00**		**1.138**		**0.263**		**0.950**		**4294.9**

WINTER CALCULATIONS

Residential Whole Building Performance Method A - Details

ADDRESS: **Lot: 20, Sub: Col. Home sites, Plat: , Lake City, FL,** PERMIT #:

BASE				AS-BUILT							
GLASS TYPES .18 X Conditioned Floor Area	X BWPM	= Points		Type/SC	Overhang Ornt	Len	Hgt	Area X	WPM X	WOF	= Points
.18	1196.0	12.74	2742.7	Double, Clear	NW	1.5	6.0	60.0	24.30	1.00	1462.4
				Double, Clear	SW	1.5	6.0	50.0	16.74	1.06	887.3
				Double, Clear	SW	1.5	6.0	15.0	16.74	1.06	266.2
				Double, Clear	SE	1.5	6.0	15.0	14.71	1.10	241.8
				Double, Clear	SE	1.5	6.0	20.0	14.71	1.10	322.4
				Double, Clear	NE	1.5	6.0	60.0	23.57	1.01	1423.1
				Double, Clear	NE	1.5	4.5	10.5	23.57	1.01	250.6
				As-Built Total:				**230.5**			**4853.9**

WALL TYPES	Area X	BWPM	= Points	Type	R-Value	Area X	WPM	= Points
Adjacent	120.0	3.60	432.0	Frame, Wood, Exterior	13.0	1972.0	3.40	6704.8
Exterior	1972.0	3.70	7296.4	Frame, Wood, Adjacent	13.0	120.0	3.30	396.0
Base Total:	**2092.0**		**7728.4**	**As-Built Total:**		**2092.0**		**7100.8**

DOOR TYPES	Area X	BWPM	= Points	Type	Area X	WPM	= Points
Adjacent	18.0	11.50	207.0	Adjacent Wood	18.0	11.50	207.0
Exterior	60.0	12.30	738.0	Exterior Wood	60.0	12.30	738.0
Base Total:	**78.0**		**945.0**	**As-Built Total:**	**78.0**		**945.0**

CEILING TYPES	Area X	BWPM	= Points	Type	R-Value	Area X	WPM X WCM	= Points
Under Attic	1196.0	2.05	2451.8	Under Attic	30.0	1196.0	2.05 X 1.00	2451.8
Base Total:	**1196.0**		**2451.8**	**As-Built Total:**		**1196.0**		**2451.8**

FLOOR TYPES	Area X	BWPM	= Points	Type	R-Value	Area X	WPM	= Points
Slab	232.0(p)	8.9	2064.8	Slab-On-Grade Edge Insulation	0.0	232.0(p	18.80	4361.6
Raised	0.0	0.00	0.0					
Base Total:			**2064.8**	**As-Built Total:**		**232.0**		**4361.6**

INFILTRATION	Area X	BWPM	= Points	Area X	WPM	= Points
	1196.0	-0.59	-705.6	1196.0	-0.59	-705.6

WINTER CALCULATIONS

Residential Whole Building Performance Method A - Details

ADDRESS: **Lot: 20, Sub: Col. Home sites, Plat: , Lake City, FL,** PERMIT #:

BASE			AS-BUILT						
Winter Base Points:		**15227.0**	**Winter As-Built Points:**						**19007.4**
Total Winter Points	X System Multiplier	= Heating Points	Total Component (System - Points)	X Cap Ratio	X Duct Multiplier (DM x DSM x AHU)	X System Multiplier	X Credit Multiplier	= Heating Points	
			(sys 1: Electric Heat Pump 24000 btuh ,EFF(7.2) Ducts:Unc(S),Unc(R),Int(AH),R6.0						
			19007.4	1.000	(1.069 x 1.169 x 0.93)	0.474	1.000	10462.1	
15227.0	**0.6274**	**9553.4**	**19007.4**	**1.00**	**1.162**	**0.474**	**1.000**	**10462.1**	

WATER HEATING & CODE COMPLIANCE STATUS

Residential Whole Building Performance Method A - Details

ADDRESS: **Lot: 20, Sub: Col. Home sites, Plat: , Lake City, FL,** PERMIT #:

BASE				AS-BUILT							
WATER HEATING											
Number of Bedrooms	X	Multiplier	= Total	Tank Volume	EF	Number of Bedrooms	X Tank Ratio	X Multiplier	X Credit Multiplier	= Total	
3		2635.00	7905.0	50.0	0.92	3	1.00	2635.00	1.00	7905.0	
				As-Built Total:						**7905.0**	

CODE COMPLIANCE STATUS

BASE				AS-BUILT			
Cooling Points +	Heating Points +	Hot Water Points =	Total Points	Cooling Points +	Heating Points +	Hot Water Points =	Total Points
5911	**9553**	**7905**	**23369**	**4295**	**10462**	**7905**	**22662**

PASS

Code Compliance Checklist

Residential Whole Building Performance Method A - Details

ADDRESS: **Lot: 20, Sub: Col. Home sites, Plat: , Lake City, FL,** PERMIT #:

6A-21 INFILTRATION REDUCTION COMPLIANCE CHECKLIST

COMPONENTS	SECTION	REQUIREMENTS FOR EACH PRACTICE	CHECK
Exterior Windows & Doors	606.1.ABC.1.1	Maximum:.3 cfm/sq.ft. window area; .5 cfm/sq.ft. door area.	
Exterior & Adjacent Walls	606.1.ABC.1.2.1	Caulk, gasket, weatherstrip or seal between: windows/doors & frames, surrounding wall; foundation & wall sole or sill plate; joints between exterior wall panels at corners; utility penetrations; between wall panels & top/bottom plates; between walls and floor. EXCEPTION: Frame walls where a continuous infiltration barrier is installed that extends from, and is sealed to, the foundation to the top plate.	
Floors	606.1.ABC.1.2.2	Penetrations/openings >1/8" sealed unless backed by truss or joint members. EXCEPTION: Frame floors where a continuous infiltration barrier is installed that is sealed to the perimeter, penetrations and seams.	
Ceilings	606.1.ABC.1.2.3	Between walls & ceilings; penetrations of ceiling plane of top floor; around shafts, chases, soffits, chimneys, cabinets sealed to continuous air barrier; gaps in gyp board & top plate; attic access. EXCEPTION: Frame ceilings where a continuous infiltration barrier is installed that is sealed at the perimeter, at penetrations and seams.	
Recessed Lighting Fixtures	606.1.ABC.1.2.4	Type IC rated with no penetrations, sealed; or Type IC or non-IC rated, installed inside a sealed box with 1/2" clearance & 3" from insulation; or Type IC rated with < 2.0 cfm from conditioned space, tested.	
Multi-story Houses	606.1.ABC.1.2.5	Air barrier on perimeter of floor cavity between floors.	
Additional Infiltration reqts	606.1.ABC.1.3	Exhaust fans vented to outdoors, dampers; combustion space heaters comply with NFPA, have combustion air.	

6A-22 OTHER PRESCRIPTIVE MEASURES (must be met or exceeded by all residences.)

COMPONENTS	SECTION	REQUIREMENTS	CHECK
Water Heaters	612.1	Comply with efficiency requirements in Table 612.1.ABC.3.2. Switch or clearly marked cir breaker (electric) or cutoff (gas) must be provided. External or built-in heat trap required.	
Swimming Pools & Spas	612.1	Spas & heated pools must have covers (except solar heated). Non-commercial pools must have a pump timer. Gas spa & pool heaters must have a minimum thermal efficiency of 78%.	
Shower heads	612.1	Water flow must be restricted to no more than 2.5 gallons per minute at 80 PSIG.	
Air Distribution Systems	610.1	All ducts, fittings, mechanical equipment and plenum chambers shall be mechanically attached, sealed, insulated, and installed in accordance with the criteria of Section 610. Ducts in unconditioned attics: R-6 min. insulation.	
HVAC Controls	607.1	Separate readily accessible manual or automatic thermostat for each system.	
Insulation	604.1, 602.1	Ceilings-Min. R-19. Common walls-Frame R-11 or CBS R-3 both sides. Common ceiling & floors R-11.	

ENERGY PERFORMANCE LEVEL (EPL) DISPLAY CARD

ESTIMATED ENERGY PERFORMANCE SCORE* = 83.2

The higher the score, the more efficient the home.

Compass Builders, Lot: 20, Sub: Col. Home sites, Plat: , Lake City, FL,

1. New construction or existing	New	__
2. Single family or multi-family	Single family	__
3. Number of units, if multi-family	1	__
4. Number of Bedrooms	3	__
5. Is this a worst case?	Yes	__
6. Conditioned floor area (ft²)	1196 ft²	__
7. Glass type[1] and area: (Label reqd. by 13-104.4.5 if not default)		
a. U-factor: (or Single or Double DEFAULT)	Description Area 7a. (Dble Default) 120.5 ft²	__
b. SHGC: (or Clear or Tint DEFAULT)	7b. (Clear) 120.5 ft²	__
8. Floor types		
a. Slab-On-Grade Edge Insulation	R=0.0, 232.0(p) ft	__
b. N/A		__
c. N/A		__
9. Wall types		
a. Frame, Wood, Exterior	R=13.0, 1972.0 ft²	__
b. Frame, Wood, Adjacent	R=13.0, 120.0 ft²	__
c. N/A		__
d. N/A		__
e. N/A		__
10. Ceiling types		
a. Under Attic	R=30.0, 1196.0 ft²	__
b. N/A		__
c. N/A		__
11. Ducts		
a. Sup: Unc. Ret: Unc. AH: Interior	Sup. R=6.0, 92.0 ft	__
b. N/A		__

12. Cooling systems		
a. Central Unit	Cap: 24.0 kBtu/hr	__
	SEER: 13.00	__
b. N/A		__
		__
c. N/A		__
		__
13. Heating systems		
a. Electric Heat Pump	Cap: 24.0 kBtu/hr	__
	HSPF: 7.20	__
b. N/A		__
		__
c. N/A		__
		__
14. Hot water systems		
a. Electric Resistance	Cap: 50.0 gallons	__
	EF: 0.92	__
b. N/A		__
		__
c. Conservation credits (HR-Heat recovery, Solar DHP-Dedicated heat pump)		__
15. HVAC credits (CF-Ceiling fan, CV-Cross ventilation, HF-Whole house fan, PT-Programmable Thermostat, MZ-C-Multizone cooling, MZ-H-Multizone heating)	CF,	__

I certify that this home has complied with the Florida Energy Efficiency Code For Building Construction through the above energy saving features which will be installed (or exceeded) in this home before final inspection. Otherwise, a new EPL Display Card will be completed based on installed Code compliant features.

Builder Signature: _____ Date: _____

Address of New Home: _____ City/FL Zip: _____

**NOTE: The home's estimated energy performance score is only available through the FLA/RES computer program. This is not a Building Energy Rating. If your score is 80 or greater (or 86 for a US EPA/DOE EnergyStar™ designation), your home may qualify for energy efficiency mortgage (EEM) incentives if you obtain a Florida Energy Gauge Rating. Contact the Energy Gauge Hotline at 321/638-1492 or see the Energy Gauge web site at www.fsec.ucf.edu for information and a list of certified Raters. For information about Florida's Energy Efficiency Code For Building Construction, contact the Department of Community Affairs at 850/487-1824.*

1 Predominant glass type. For actual glass type and areas, see Summer & Winter Glass output on pages 2&4.

Columbia County, Florida
Planning & Zoning Department

Review of Building Permit for compliance with County's Comprehensive Plan and Land Development Regulations

To: Jacob Kirsch **Fax:** 386.752.5047

From : Brian L. Kepner, County Planner **Fax:** 386.758.2160

Number of pages : 1

Date : 20 July 2007

RE: Building Permit Application 0705-81, Compass Builders/Assoc. Corp.
Lot 20, Columbia Homesites Subdivision

Dear Jacob:

The County engineer is requesting more information concerning this lot. He would like to know what FDOT is requiring on the access permit for the lot, as this may have implications as to the elevation of the first floor and drainage along the road way. Has an access permit from FDOT been applied for yet?

If you have any questions concerning this matter, please do not hesitate to contact me at 386.758.1007.

Sincerely,

Brian L. Kepner
Land Development Regulation Administrator,
County Planner

Confidentiality Notice: This facsimile transmission is confidential and is intended only for the review of the party to whom it is addressed. It may contain proprietary and/or privileged information protected by law. If you are not the intended recipient, you may not use, copy or distribute this facsimile message or its attachments. If you have received this transmission in error, please immediately telephone the sender above to arrange for its return.

Columbia County, Florida
Planning & Zoning Department

Review of Building Permit for compliance with County's Comprehensive Plan and Land Development Regulations

To: Jacob Kirsch **Fax:** 386.752.5047

From: Brian L. Kepner, County Planner **Fax:** 386.758.2160

Number of pages: 4

Date: 6 June 2007

RE: Building Permit Application 0705-81, Compass Builders/Assoc. Corp.
Lot 20, Unit 1, Columbia City Homesites Subdivision

Dear Jacob:

The above referenced parcel was flooded in Hurricane Frances and must comply with Resolution 2005-26R. I have enclosed a copy of the resolution. Please submit the required items for review by the County Engineer for building permit approval. Thank you.

If you have any questions concerning this matter, please do not hesitate to contact me at 386.758.1007.

Sincerely,

Brian L. Kepner
Land Development Regulation Administrator,
County Planner

Confidentiality Notice: This facsimile transmission is confidential and is intended only for the review of the party to whom it is addressed. It may contain proprietary and/or privileged information protected by law. If you are not the intended recipient, you may not use, copy or distribute this facsimile message or its attachments. If you have received this transmission in error, please immediately telephone the sender above to arrange for its return.

0705-81

Columbia County Property Appraiser

J. Doyle Crews, CFA - Lake City, Florida - 386-758-1083

PARCEL: 15-5S-16-03626-320 - VACANT (000000)

Name:	COMPASS BUILDERS & ASSOC CORP	LandVal	$13,500.00
Site:		BldgVal	$0.00
	197 SW WATERFORD CT	ApprVal	$13,500.00
Mail:	SUITE 105	JustVal	$13,500.00
	LAKE CITY, FL 32025	Assd	$13,500.00
Sales	3/16/2007 $35,000.00 V / Q	Exmpt	$0.00
Info	11/1/2000 $12,000.00 V / Q	Taxable	$13,500.00

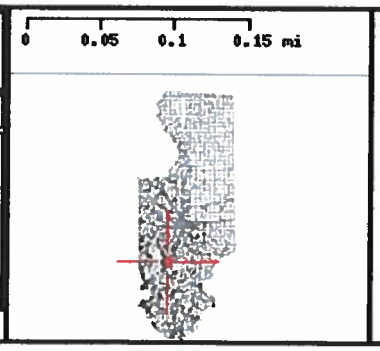

This information, GIS Map Updated: 5/11/2007, was derived from data which was compiled by the Columbia County Property Appraiser Office solely for the governmental purpose of property assessment. This information should not be relied upon by anyone as a determination of the ownership of property or market value. No warranties, expressed or implied, are provided for the accuracy of the data herein, it's use, or it's interpretation. Although it is periodically updated, this information may not reflect the data currently on file in the Property Appraiser's office. The assessed values are NOT certified values and therefore are subject to change before being finalized for ad valorem assessment purposes.

PRODUCT APPROVAL SPECIFICATION SHEET

As required by Florida Statute 553.842 and Florida Administrative Code 9B-72, please provide the information and approval numbers on the building components listed below if they will be utilized on the construction project for which you are applying for a building permit. We recommend you contact your local product supplier should you not know the product approval number for any of the applicable listed products. Statewide approved products are listed online @ www.floridabuilding.org

Category/Subcategory	Manufacturer	Product Description	Approval Number(s)
1. EXTERIOR DOORS	Jeld-wen	Steel Door	FL-498-R1
A. SWINGING			
B. SLIDING			
C. SECTIONAL/ROLL UP	Raynor	Garage Door	FL-4867
D. OTHER			
2. WINDOWS			
A. SINGLE/DOUBLE HUNG	MI products	Single-Hung window	FL-5108
B. HORIZONTAL SLIDER			
C. CASEMENT			
D. FIXED			
E. MULLION			
F. SKYLIGHTS			
G. OTHER			
3. PANEL WALL			
A. SIDING	James Hardi	Lap Siding	FL-589 R2
B. SOFFITS	Raycon	Aluminum Soffit	FL-4957
C. STOREFRONTS			
D. GLASS BLOCK			
E. OTHER			
4. ROOFING PRODUCTS			
A. ASPHALT SHINGLES	Elk	Asphalt Shingles	FL-586 R2
B. NON-STRUCT METAL			
C. ROOFING TILES			
D. SINGLE PLY ROOF			
E. OTHER			
5. STRUCT COMPONENTS			
A. WOOD CONNECTORS	Simpson	truss ties	FL-474 R1
B. WOOD ANCHORS			
C. TRUSS PLATES			
D. INSULATION FORMS			
E. LINTELS			
F. OTHERS			
6. NEW EXTERIOR ENVELOPE PRODUCTS			
A.			

The products listed below did not demonstrate product approval at plan review. I understand that at the time of inspection of these products, the following information must be available to the inspector on the jobsite; 1) copy of the product approval, 2) performance characteristics which the product was tested and certified to comply with, 3) copy of the applicable manufacturers installation requirements. Further, I understand these products may have to be removed if approval cannot be demonstrated during inspection.

APPLICANT SIGNATURE

4/23/07
DATE

R-1305 01-04

COLUMBIA COUNTY BUILDING DEPARTMENT

Revised 10-01-05

RESIDENTIAL MINIMUM PLAN REQUIREMENTS AND CHECKLIST FOR FLORIDA BUILDING CODE 2004 and FLORIDA RESIDENTIAL CODE 2004 WITH AMENDMENTS ONE (1) AND TWO (2) FAMILY DWELLINGS

ALL REQUIREMENTS ARE SUBJECT TO CHANGE
EFFECTIVE OCTOBER 1, 2005

ALL BUILDING PLANS MUST INDICATE THE FOLLOWING ITEMS AND INDICATE COMPLIANCE WITH CHAPTER 16 OF THE FLORIDA BUILDING CODE 2004 BY PROVIDING CALCULATIONS AND DETAILS THAT HAVE THE SEAL AND SIGNATURE OF A CERTIFIED ARCHITECT OR ENGINEER REGISTERED IN THE STATE OF FLORIDA, OR ALTERNATE METHODOLOGIES, APPROVED BY THE STATE OF FLORIDA BUILDING COMMISSION FOR ONE-AND-TWO FAMILY DWELLINGS. FOR DESIGN PURPOSES THE FOLLOWING BASIC WIND SPEED AS PER FIGURE 1609 SHALL BE USED.

WIND SPEED LINE SHALL BE DEFINED AS FOLLOWS: THE CENTERLINE OF INTERSTATE 75.

1. ALL BUILDINGS CONSTRUCTED EAST OF SAID LINE SHALL BE ------- 100 MPH
2. ALL BUILDINGS CONSTRUCTED WEST OF SAID LINE SHALL BE -------110 MPH
3. NO AREA IN COLUMBIA COUNTY IS IN A WIND BORNE DEBRIS REGION

APPLICANT – PLEASE CHECK ALL APPLICABLE BOXES BEFORE SUBMITTAL

GENERAL REQUIREMENTS; Two (2) complete sets of plans containing the following:

Applicant	Plans Examiner	
☑	☐	All drawings must be clear, concise and drawn to scale ("Optional " details that are not used shall be marked void or crossed off). Square footage of different areas shall be shown on plans.
☑	☐	Designers name and signature on document (FBC 106.1). If licensed architect or engineer, official seal shall be affixed.
☐	☐	**Site Plan including:** a) Dimensions of lot b) Dimensions of building set backs c) Location of all other buildings on lot, well and septic tank if applicable, and all utility easements. d) Provide a full legal description of property.
☐	☐	**Wind-load Engineering Summary, calculations and any details required** Plans or specifications must state compliance with FBC Section 1609. The following information must be shown as per section 1603.1.4 FBC a. Basic wind speed (3-second gust), miles per hour (km/hr). b. Wind importance factor, I_w, and building classification from Table 1604.5 or Table 6-1, ASCE 7 and building classification in Table 1-1, ASCE 7. c. Wind exposure, if more than one wind exposure is utilized, the wind exposure and applicable wind direction shall be indicated. d. The applicable enclosure classifications and, if designed with ASCE 7, internal pressure coefficient. e. Components and Cladding. The design wind pressures in terms of psf (kN/m²) to be used for the design of exterior component and cladding materials not specifally designed by the registered design professional.
		Elevations including:
☑	☐	a) All sides
☑	☐	b) Roof pitch
☐	☐	c) Overhang dimensions and detail with attic ventilation

☑	☐	d) Location, size and height above roof of chimneys.
☑	☐	e) Location and size of skylights
☑	☐	f) Building height
☑	☐	e) Number of stories
		Floor Plan including:
☑	☐	a) Rooms labeled and dimensioned.
☐	☐	b) Shear walls identified.
☐	☐	c) Show product approval specification as required by Fla. Statute 553.842 and Fla. Administrative Code 9B-72 **(see attach forms).**
☑	☐	d) Show safety glazing of glass, where required by code.
☑	☐	e) Identify egress windows in bedrooms, and size.
☒	☐	f) Fireplace (gas vented), (gas non-vented) or wood burning with hearth, **(Please circle applicable type).**
☒	☐	g) Stairs with dimensions (width, tread and riser) and details of guardrails and handrails.
☐	☐	h) Must show and identify accessibility requirements (~~accessible bathroom~~) Master
		Foundation Plan including:
☐	☐	a) Location of all load-bearing wall with required footings indicated as standard or monolithic and dimensions and reinforcing.
☐	☐	b) All posts and/or column footing including size and reinforcing
☐	☐	c) Any special support required by soil analysis such as piling
☐	☐	d) Location of any vertical steel.
		Roof System:
☐	☐	a) Truss package including: 1. Truss layout and truss details signed and sealed by Fl. Pro. Eng. 2. Roof assembly (FBC 106.1.1.2)Roofing system, materials, manufacturer, fastening requirements and product evaluation with wind resistance rating)
☐	☐	b) Conventional Framing Layout including: 1. Rafter size, species and spacing 2. Attachment to wall and uplift 3. Ridge beam sized and valley framing and support details 4. Roof assembly (FBC 106.1.1.2)Roofing systems, materials, manufacturer, fastening requirements and product evaluation with wind resistance rating)
		Wall Sections including:
☐	☐	a) Masonry wall 1. All materials making up wall 2. Block size and mortar type with size and spacing of reinforcement 3. Lintel, tie-beam sizes and reinforcement 4. Gable ends with rake beams showing reinforcement or gable truss and wall bracing details 5. All required connectors with uplift rating and required number and size of fasteners for continuous tie from roof to foundation shall be designed by a Windload engineer using the engineered roof truss plans. 6. Roof assembly shown here or on roof system detail (FBC 106.1.1.2) Roofing system, materials, manufacturer, fastening requirements and product evaluation with resistance rating) 7. Fire resistant construction (if required) 8. Fireproofing requirements 9. Shoe type of termite treatment (termiticide or alternative method) 10. Slab on grade a. Vapor retarder (6mil. Polyethylene with joints lapped 6 inches and sealed) b. Must show control joints, synthetic fiber reinforcement or Welded fire fabric reinforcement and supports 11. Indicate where pressure treated wood will be placed 12. Provide insulation R value for the following:

a. Attic space
b. Exterior wall cavity
c. Crawl space (if applicable)

☐ ☐ b) Wood frame wall

1. All materials making up wall
2. Size and species of studs
3. Sheathing size, type and nailing schedule
4. Headers sized
5. Gable end showing balloon framing detail or gable truss and wall hinge bracing detail
6. All required fasteners for continuous tie from roof to foundation (truss anchors, straps, anchor bolts and washers) shall be designed by a Windload engineer using the engineered roof truss plans.
7. Roof assembly shown here or on roof system detail (FBC 106.1.1.2) Roofing system, materials, manufacturer, fastening requirements and product evaluation with wind resistance rating)
8. Fire resistant construction (if applicable)
9. Fireproofing requirements
10. Show type of termite treatment (termiticide or alternative method)
11. Slab on grade
    a. Vapor retarder (6Mil. Polyethylene with joints lapped 6 inches and sealed
    b. Must show control joints, synthetic fiber reinforcement or welded wire fabric reinforcement and supports
12. Indicate where pressure treated wood will be placed
13. Provide insulation R value for the following:
    a. Attic space
    b. Exterior wall cavity
    c. Crawl space (if applicable)

☐ ☐ c) Metal frame wall and roof (designed, signed and sealed by Florida Prof. Engineer or Architect)

Floor Framing System:

☐ ☐ a) Floor truss package including layout and details, signed and sealed by Florida Registered Professional Engineer

☐ ☐ b) Floor joist size and spacing

☐ ☐ c) Girder size and spacing

☐ ☐ d) Attachment of joist to girder

☐ ☐ e) Wind load requirements where applicable

☐ ☐ **Plumbing Fixture layout**

Electrical layout including:

☐ ☐ a) Switches, outlets/receptacles, lighting and all required GFCI outlets identified

☐ ☐ b) Ceiling fans

☐ ☐ c) Smoke detectors

☐ ☐ d) Service panel and sub-panel size and location(s)

☐ ☐ e) Meter location with type of service entrance (overhead or underground)

☑ ☐ f) Appliances and HVAC equipment

☑ ☐ g) Arc Fault Circuits (AFCI) in bedrooms

☑ ☐ h) Exhaust fans in bathroom

HVAC information

☑ ☐ a) Energy Calculations (dimensions shall match plans)

☑ ☐ b) Manual J sizing equipment or equivalent computation

☑ ☐ c)Gas System Type (LP or Natural) Location and BTU demand of equipment

☐ ☐ **Disclosure Statement for Owner Builders**

☐ ☐ ***Notice Of Commencement Required Before Any Inspections Will Be Done**

☐ ☐ **Private Potable Water**

Residential System Sizing Calculation

Summary

Compass Builders

Lake City, FL

Project Title:
The Thomas

Code Only
Professional Version
Climate: North

4/4/2007

Location for weather data: Gainesville - Defaults: Latitude(29) Temp Range(M)					
Humidity data: Interior RH (50%) Outdoor wet bulb (77F) Humidity difference(51gr.)					
Winter design temperature	31	F	Summer design temperature	93	F
Winter setpoint	70	F	Summer setpoint	75	F
Winter temperature difference	39	F	Summer temperature difference	18	F
Total heating load calculation	**27703**	**Btuh**	**Total cooling load calculation**	**26689**	**Btuh**
Submitted heating capacity	24000	Btuh	Submitted cooling capacity	24000	Btuh
Submitted as % of calculated	86.6	%	Submitted as % of calculated	89.9	%

WINTER CALCULATIONS

Winter Heating Load (for 1196 sqft)

Load component			Load	
Window total	231	sqft	6523	Btuh
Wall total	2092	sqft	6305	Btuh
Door total	78	sqft	1242	Btuh
Ceiling total	1196	sqft	1555	Btuh
Floor total	232	ft	7331	Btuh
Infiltration	80	cfm	3427	Btuh
Subtotal			**26384**	**Btuh**
Duct loss			1319	Btuh
TOTAL HEAT LOSS			**27703**	**Btuh**

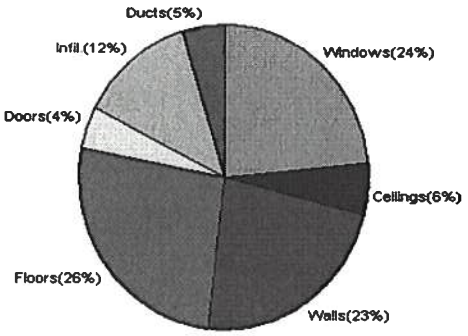

SUMMER CALCULATIONS

Summer Cooling Load (for 1196 sqft)

Load component			Load	
Window total	231	sqft	9587	Btuh
Wall total	2092	sqft	3556	Btuh
Door total	78	sqft	778	Btuh
Ceiling total	1196	sqft	1698	Btuh
Floor total			0	Btuh
Infiltration	70	cfm	1384	Btuh
Internal gain			3800	Btuh
Subtotal(sensible)			**20804**	**Btuh**
Duct gain			2080	Btuh
Total sensible gain			**22885**	**Btuh**
Latent gain(infiltration)			2424	Btuh
Latent gain(internal)			1380	Btuh
Total latent gain			**3804**	**Btuh**
TOTAL HEAT GAIN			**26689**	**Btuh**

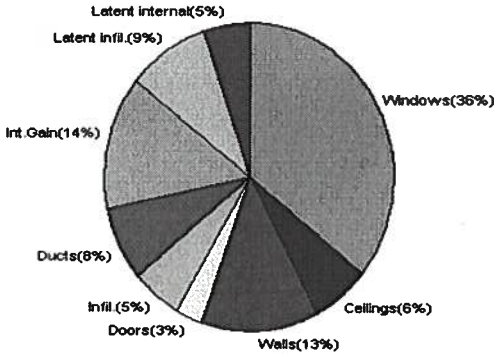

EnergyGauge® System Sizing based on ACCA Manual J.
PREPARED BY: _____
DATE: 4-4-07

System Sizing Calculations - Winter

Residential Load - Component Details

Compass Builders
Lake City, FL

Project Title:
The Thomas

Code Only
Professional Version
Climate: North

Reference City: Gainesville (Defaults) Winter Temperature Difference: 39.0 F

4/4/2007

Window	Panes/SHGC/Frame/U	Orientation	Area X	HTM=	Load
1	2, Clear, Metal, DEF	E	60.0	28.3	1698 Btuh
2	2, Clear, Metal, DEF	N	50.0	28.3	1415 Btuh
3	2, Clear, Metal, DEF	N	15.0	28.3	424 Btuh
4	2, Clear, Metal, DEF	W	15.0	28.3	424 Btuh
5	2, Clear, Metal, DEF	W	20.0	28.3	566 Btuh
6	2, Clear, Metal, DEF	S	60.0	28.3	1698 Btuh
7	2, Clear, Metal, DEF	S	10.5	28.3	297 Btuh
	Window Total		231		6523 Btuh
Walls	Type	R-Value	Area X	HTM=	Load
1	Frame - Exterior	13.0	1972	3.1	6113 Btuh
2	Frame - Adjacent	13.0	120	1.6	192 Btuh
	Wall Total		2092		6305 Btuh
Doors	Type		Area X	HTM=	Load
1	Wood - Adjac		18	9.2	166 Btuh
2	Wood - Exter		60	17.9	1076 Btuh
	Door Total		78		1242Btuh
Ceilings	Type	R-Value	Area X	HTM=	Load
1	Under Attic	30.0	1196	1.3	1555 Btuh
	Ceiling Total		1196		1555Btuh
Floors	Type	R-Value	Size X	HTM=	Load
1	Slab-On-Grade Edge Insul	0	232.0 ft(p)	31.6	7331 Btuh
	Floor Total		232		7331 Btuh
Infiltration	Type	ACH X	Building Volume	CFM=	Load
	Natural	0.40	11960(sqft)	80	3427 Btuh
	Mechanical			0	0 Btuh
	Infiltration Total			80	3427 Btuh

Totals for Heating	**Subtotal**	**26384 Btuh**
	Duct Loss(using duct multiplier of 0.05)	**1319 Btuh**
	Total Btuh Loss	**27703 Btuh**

Key: Window types (SHGC - Shading coefficient of glass as SHGC numerical value or as clear or tint)
(Frame types - metal, wood or insulated metal)
(U - Window U-Factor or 'DEF' for default)
(HTM - ManualJ Heat Transfer Multiplier)
Key: Floor size (perimeter(p) for slab-on-grade or area for all other floor types)

System Sizing Calculations - Summer

Residential Load - Component Details

Compass Builders
Lake City, FL

Project Title:
The Thomas

Code Only
Professional Version
Climate: North

Reference City: Gainesville (Defaults) Summer Temperature Difference: 18.0 F

4/4/2007

Window	Type Panes/SHGC/U/InSh/ExSh	Ornt	Overhang Len	Overhang Hgt	Window Area(sqft) Gross	Shaded	Unshaded	HTM Shaded	HTM Unshaded	Load
1	2, Clear, DEF, N, N	E	1.5	6	60.0	12.5	47.6	22	72	3698 Btuh
2	2, Clear, DEF, N, N	N	1.5	6	50.0	0.0	50.0	22	22	1100 Btuh
3	2, Clear, DEF, N, N	N	1.5	6	15.0	0.0	15.0	22	22	330 Btuh
4	2, Clear, DEF, N, N	W	1.5	6	15.0	0.7	14.3	22	72	1043 Btuh
5	2, Clear, DEF, N, N	W	1.5	6	20.0	0.5	19.5	22	72	1416 Btuh
6	2, Clear, DEF, N, N	S	1.5	6	60.0	30.0	30.0	22	37	1770 Btuh
7	2, Clear, DEF, N, N	S	1.5	4.5	10.5	10.5	0.0	22	37	231 Btuh
	Window Total				231					9587 Btuh

Walls	Type	R-Value	Area	HTM	Load
1	Frame - Exterior	13.0	1972.0	1.7	3431 Btuh
2	Frame - Adjacent	13.0	120.0	1.0	125 Btuh
	Wall Total		2092.0		3556 Btuh

Doors	Type	Area	HTM	Load
1	Wood - Adjac	18.0	10.0	180 Btuh
2	Wood - Exter	60.0	10.0	599 Btuh
	Door Total	78.0		778 Btuh

Ceilings	Type/Color	R-Value	Area	HTM	Load
1	Under Attic/Dark	30.0	1196.0	1.4	1698 Btuh
	Ceiling Total		1196.0		1698 Btuh

Floors	Type	R-Value	Size	HTM	Load
1	Slab-On-Grade Edge Insulation	0.0	232.0 ft(p)	0.0	0 Btuh
	Floor Total		232.0		0 Btuh

Infiltration	Type	ACH	Volume	CFM=	Load
	Natural	0.35	11960	69.9	1384 Btuh
	Mechanical			0	0 Btuh
	Infiltration Total			70	1384 Btuh

Internal gain	Occupants		Btuh/occupant		Appliance	Load
	6	X	300	+	2000	3800 Btuh

Totals for Cooling	**Subtotal**	**20804 Btuh**
	Duct gain(using duct multiplier of 0.10)	**2080 Btuh**
	Total sensible gain	**22885 Btuh**
	Latent infiltration gain (for 51 gr. humidity difference)	**2424 Btuh**
	Latent occupant gain (6 people @ 230 Btuh per person)	**1380 Btuh**
	Latent other gain	**0 Btuh**
	TOTAL GAIN	**26689 Btuh**

Manual J Summer Calculations

Residential Load - Component Details (continued)

Compass Builders

Lake City, FL

Project Title:
The Thomas

Code Only
Professional Version
Climate: North

4/4/2007

Key: Window types (SHGC - Shading coefficient of glass as SHGC numerical value or as clear or tint)
(U - Window U-Factor or 'DEF' for default)
(InSh - Interior shading device: none(N), Blinds/Daperies(B) or Roller Shades(R))
(ExSh - Exterior shading device: none(N) or numerical value)
(Ornt - compass orientation)

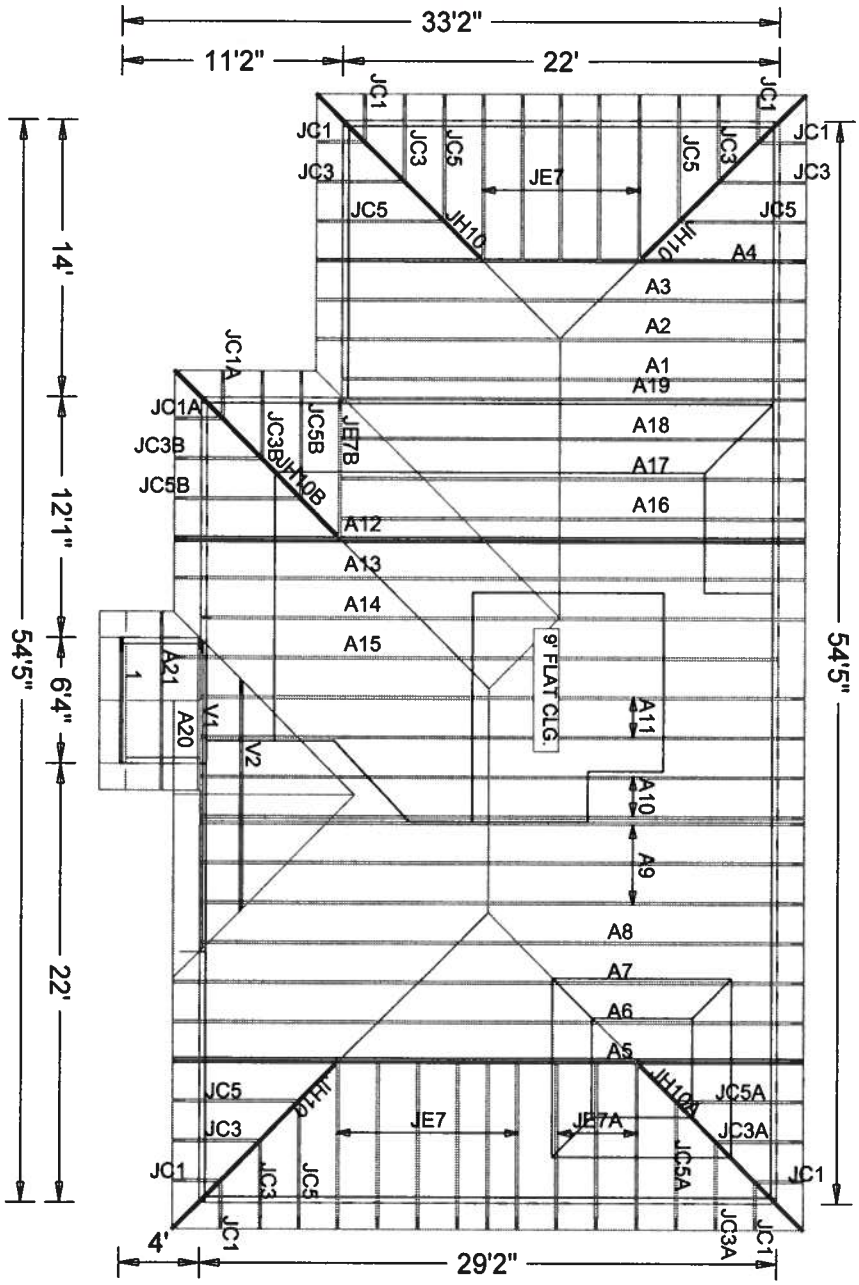

DATE:4/9/07
ROOF PITCH:6/12
CLG. PITCH:3.5/12
DR & LR. KIT AT
9' FLAT
OVERHANG:16"
LOADING:40#s PSF
WIND LOAD:10 MPH
EXT. WALLS:2X4X8'

W.B. HOWLAND
Office:(386)362-1235
Fax: (386)362-7124

ROOF & FLOOR TRUSS QUOTES
DO NOT INCLUDE BEAMS, LVLS,
AND/OR GLULAMS.

Job Name: LOT 20 COLUMBIA HOMESITES
Customer: Compass Builders
Designer: Lynn Bell

JOB NO: 4490

PAGE NO: 1 OF 1

ITW Building Components Group, Inc.

1950 Marley Drive Haines City, FL 33844
Florida Engineering Certificate of Authorization Number: 567
Florida Certificate of Product Approval # FL1999
 Document ID:1T6E215-Z0310131129

Truss Fabricator: W.B. Howland
Job Identification: 4490-/LOT 20 COLUMBIA HOMESITES /Compass Builders -- , **
Truss Count: 38
Model Code: Florida Building Code 2004 and 2006 Supplement
Truss Criteria: ANSI/TPI-2002(STD)/FBC
Engineering Software: Alpine Software,Versions 7.25, 7.26.
Structural Engineer of Record: The identity of the structural EOR did not exist as of
Address: the seal date per section 61G15-31.003(5a) of the FAC
Minimum Design Loads: Roof - 40.0 PSF @ 1.25 Duration
Floor - N/A
Wind - 110 MPH ASCE 7-02 -Closed

Seal Date: 04/10/2007

-Truss Design Engineer-
James F. Collins Jr.
Florida License Number: 52212
1950 Marley Drive
Haines City, FL 33844

Notes:

1. Determination as to the suitability of these truss components for the structure is the responsibility of the building designer/engineer of record, as defined in ANSI/TPI 1
2. The drawing date shown on this index sheet must match the date shown on the individual truss component drawing.
3. As shown on attached drawings; the drawing number is preceded by: HCUSR215

Details: A11015EE-GBLLETIN-BRCLBSUB-VALTRUSS-

#	Ref Description	Drawing#	Date
1	70965--1	07100050	04/10/07
2	70966--A1	07100070	04/10/07
3	70967--A2	07100060	04/10/07
4	70968--A3	07100049	04/10/07
5	70969--A4	07100039	04/10/07
6	70970--A5	07100043	04/10/07
7	70971--A6	07100040	04/10/07
8	70972--A7	07100041	04/10/07
9	70973--A8	07100043	04/10/07
10	70974--A9	07100055	04/10/07
11	70975--A10	07100042	04/10/07
12	70976--A11	07100048	04/10/07
13	70977--A12	07100061	04/10/07
14	70978--A13	07100045	04/10/07
15	70979--A14	07100046	04/10/07
16	70980--A15	07100047	04/10/07
17	70981--A16	07100065	04/10/07
18	70982--A17	07100064	04/10/07
19	70983--A18	07100063	04/10/07
20	70984--A19	07100062	04/10/07
21	70985--A20	07100067	04/10/07
22	70986--A21	07100066	04/10/07
23	70987--JC1	07100073	04/10/07
24	70988--JC3	07100002	04/10/07
25	70989--JC5	07100072	04/10/07
26	70990--JC1A	07100059	04/10/07
27	70991--JC3A	07100053	04/10/07
28	70992--JC5A	07100052	04/10/07
29	70993--JC3B	07100058	04/10/07
30	70994--JC5B	07100057	04/10/07
31	70995--JE7	07100074	04/10/07
32	70996--JE7A	07100054	04/10/07
33	70997--JE7B	07100044	04/10/07
34	70998--JH10	07100071	04/10/07
35	70999--JH10A	07100051	04/10/07
36	71000--JH10B	07100056	04/10/07
37	71001--V1	07100068	04/10/07
38	71002--V2	07100069	04/10/07

ITW Building Components Group, Inc.

1950 Marley Drive Haines City, FL 33844
Florida Engineering Certificate of Authorization Number: 567
 Document ID:1T6E215-Z0310131129

Truss Fabricator: W.B. Howland
Job Identification: 4490-/LOT 20 COLUMBIA HOMESITES /Compass Builders -- , **
Truss Count: 3
Model Code: Florida Building Code 2004 and 2006 Supplement
Truss Criteria: ANSI/TPI-2002(STD)/FBC
Engineering Software: Alpine Software,Versions 7.25, 7.26.
Structural Engineer of Record:
Address:
Minimum Design Loads: Roof - 40.0 PSF @ 1.25 Duration
Floor - N/A
Wind - 110 MPH ASCE 7-02 -Closed

Seal Date: 04/10/2007

-Truss Design Engineer-
James F. Collins Jr.
Florida License Number: 52212
1950 Marley Drive
Haines City, FL 33844

Notes:

1. Determination as to the suitability of these truss components for the structure is the responsibility of the building designer/engineer of record, as defined in ANSI/TPI 1
2. The drawing date shown on this index sheet must match the date shown on the individual truss component drawing.
3. As shown on attached drawings; the drawing number is preceded by: HCUSR215

Revised Trusses

#	Ref	Description	Drawing#	Date
1	70970	--A5	07100043	04/10/07
2	70977	--A12	07100061	04/10/07
3	70983	--A18	07100063	04/10/07

ALPINE

Top chord 2x4 SP #2 N
Bot chord 2x4 SP #2 N
Webs 2x4 SP #2 N

Wind reactions based on MWFRS pressures.

See DWGS A11015EE0207 & GBLLETIN0207 for more requirements.

Plates sized for a minimum of 3.00 sq.in./piece.

110 mph wind, 15.00 ft mean hgt, ASCE 7-02, CLOSED bldg, Located anywhere in roof, CAT II, EXP B, wind TC DL=5.0 psf, wind BC DL=5.0 psf. Iw=1.00 GCpi(+/-)=0.18

Gable end supports 8" max rake overhang.

Deflection meets L/240 live and L/180 total load.

The overall height of this truss excluding overhang is 1-7-4.

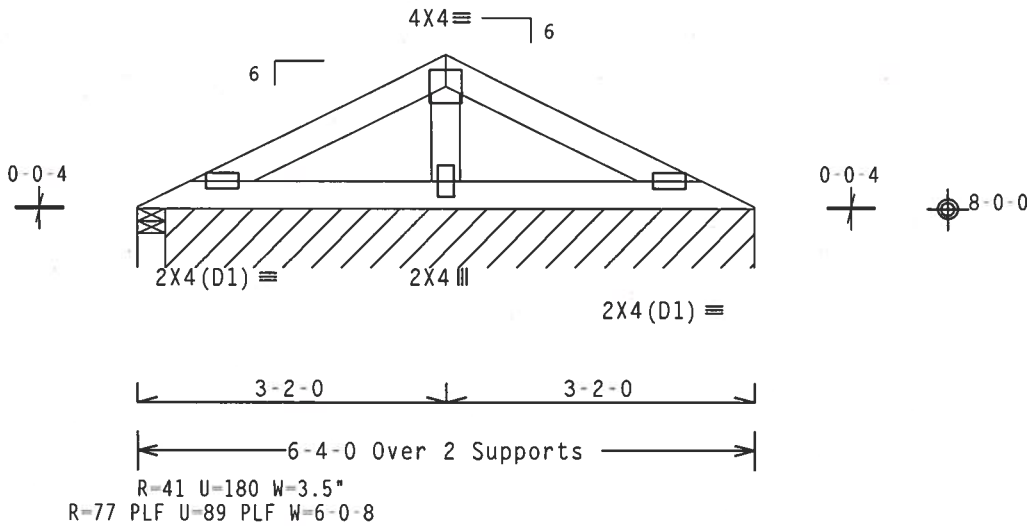

Design Crit: TPI-2002(STD)/FBC

PLT TYP. Wave Cq/RT=1.00(1.25)/10(0) 7.25.0503 QTY:1 FL/-/5/-/-/R/- Scale =.5"/Ft.

ALPINE
ITW Building Components Group, Inc.
Haines City, FL 33844
FL Certificate of Authorization # 567

WARNING TRUSSES REQUIRE EXTREME CARE IN FABRICATION, HANDLING, SHIPPING, INSTALLING AND BRACING. REFER TO BCSI (BUILDING COMPONENT SAFETY INFORMATION), PUBLISHED BY TPI (TRUSS PLATE INSTITUTE, 218 NORTH LEE STREET, SUITE 312, ALEXANDRIA, VA. 22314) AND WTCA (WOOD TRUSS COUNCIL OF AMERICA, 6300 ENTERPRISE LANE, MADISON, WI 53719) FOR SAFETY PRACTICES PRIOR TO PERFORMING THESE FUNCTIONS. UNLESS OTHERWISE INDICATED TOP CHORD SHALL HAVE PROPERLY ATTACHED STRUCTURAL PANELS AND BOTTOM CHORD SHALL HAVE A PROPERLY ATTACHED RIGID CEILING.

IMPORTANTFURNISH A COPY OF THIS DESIGN TO THE INSTALLATION CONTRACTOR. ITW BCG, INC. SHALL NOT BE RESPONSIBLE FOR ANY DEVIATION FROM THIS DESIGN; ANY FAILURE TO BUILD THE TRUSS IN CONFORMANCE WITH TPI; OR FABRICATING, HANDLING, SHIPPING, INSTALLING & BRACING OF TRUSSES.
DESIGN CONFORMS WITH APPLICABLE PROVISIONS OF NDS (NATIONAL DESIGN SPEC. BY AF&PA) AND TPI. ITW BCG CONNECTOR PLATES ARE MADE OF 20/18/16GA (W,H/SS/K) ASTM A653 GRADE 40/60 (W. K/H.SS) GALV. STEEL. APPLY PLATES TO EACH FACE OF TRUSS AND, UNLESS OTHERWISE LOCATED ON THIS DESIGN, POSITION PER DRAWINGS 160A-Z. ANY INSPECTION OF PLATES FOLLOWED BY (1) SHALL BE PER ANNEX A3 OF TPI1-2002 SEC.3. A SEAL ON THIS DRAWING INDICATES ACCEPTANCE OF PROFESSIONAL ENGINEERING RESPONSIBILITY SOLELY FOR THE TRUSS COMPONENT DESIGN SHOWN. THE SUITABILITY AND USE OF THIS COMPONENT FOR ANY BUILDING IS THE RESPONSIBILITY OF THE BUILDING DESIGNER PER ANSI/TPI 1 SEC. 2.

JAMES F. COLLINS, JR. LICENSE No. 52212 STATE OF FLORIDA PROFESSIONAL ENGINEER
Apr 10 07

TC LL	20.0 PSF	REF	R215-- 70965
TC DL	10.0 PSF	DATE	04/10/07
BC DL	10.0 PSF	DRW	HCUSR215 07100050
BC LL	0.0 PSF	HC-ENG	DAB/AP
TOT.LD.	40.0 PSF	SEQN-	88633
DUR.FAC.	1.25	FROM	LRB
SPACING	24.0"	JREF-	1T6E215_Z03

(4490-/LOT 20 COLUMBIA HOMESITES /Compass Builders -- , ** - A1)

THIS DAY PREPARED FROM COMPUTER INPUT (LOADS & DIMENSIONS) SUBMITTED BY TRUSS MFR.

Top chord 2x4 SP #2 N
Bot chord 2x4 SP #2 N
Webs 2x4 SP #2 N

Wind reactions based on MWFRS pressures.

Plates sized for a minimum of 3.00 sq.in./piece.

110 mph wind, 15.00 ft mean hgt, ASCE 7-02, CLOSED bldg, not located within 4.50 ft from roof edge, CAT II, EXP B, wind TC DL=5.0 psf, wind BC DL=5.0 psf. Iw=1.00 GCpi(+/-)=0.18

Deflection meets L/240 live and L/180 total load.

The overall height of this truss excluding overhang is 5-10-3.

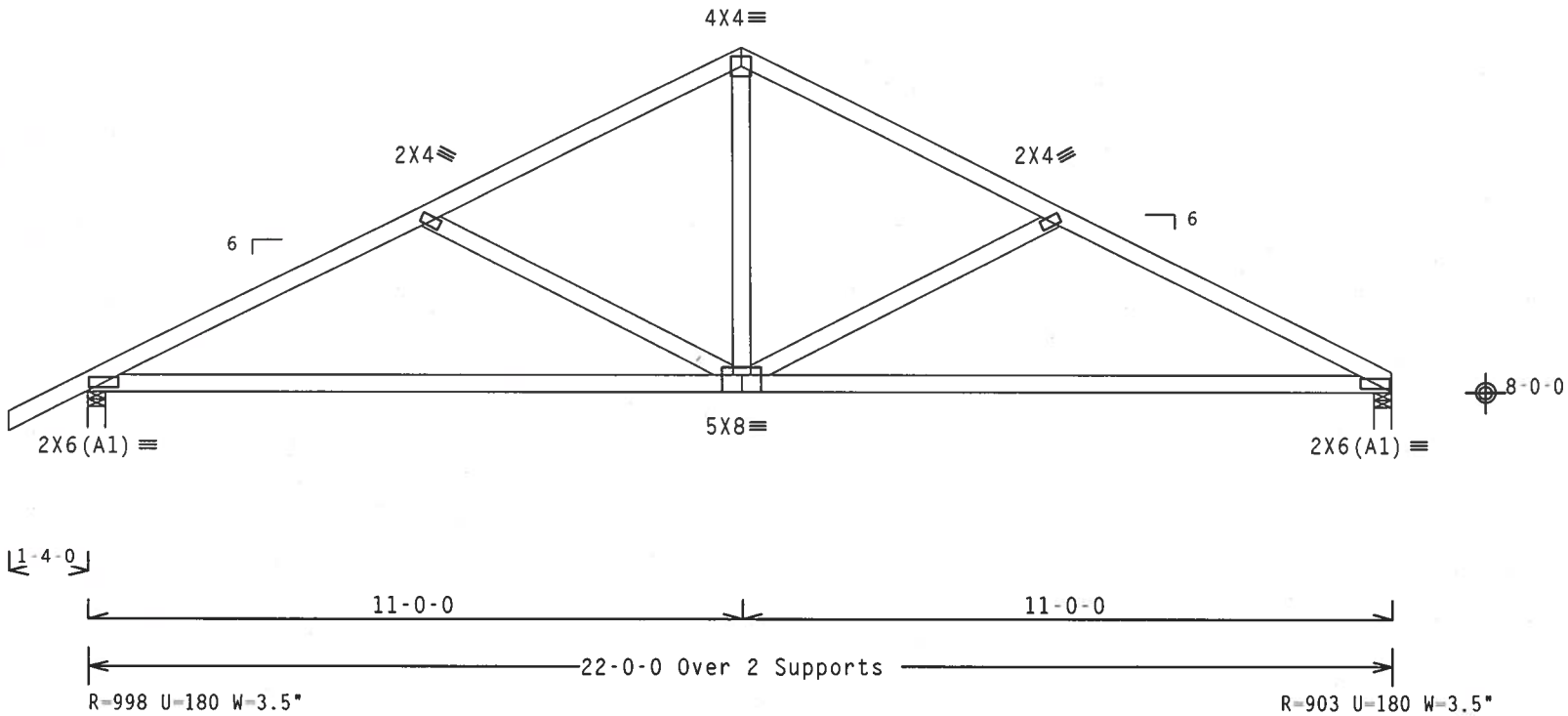

Design Crit: TPI-2002(STD)/FBC

PLT TYP. Wave Cq/RT=1.00(1.25)/10(0) 7.25.0503 QTY:1 FL/-/5/-/-/R/- Scale =.3125"/Ft.

ALPINE
ITW Building Components Group, Inc.
Haines City, FL 33844
FL Certificate of Authorization # 567

WARNING TRUSSES REQUIRE EXTREME CARE IN FABRICATION, HANDLING, SHIPPING, INSTALLING AND BRACING. REFER TO BCSI (BUILDING COMPONENT SAFETY INFORMATION), PUBLISHED BY TPI (TRUSS PLATE INSTITUTE, 218 NORTH LEE STREET, SUITE 312, ALEXANDRIA, VA, 22314) AND WTCA (WOOD TRUSS COUNCIL OF AMERICA, 6300 ENTERPRISE LANE, MADISON, WI 53719) FOR SAFETY PRACTICES PRIOR TO PERFORMING THESE FUNCTIONS. UNLESS OTHERWISE INDICATED TOP CHORD SHALL HAVE PROPERLY ATTACHED STRUCTURAL PANELS AND BOTTOM CHORD SHALL HAVE A PROPERLY ATTACHED RIGID CEILING.

IMPORTANT FURNISH A COPY OF THIS DESIGN TO THE INSTALLATION CONTRACTOR. ITW BCG, INC. SHALL NOT BE RESPONSIBLE FOR ANY DEVIATION FROM THIS DESIGN; ANY FAILURE TO BUILD THE TRUSS IN CONFORMANCE WITH TPI; OR FABRICATING, HANDLING, SHIPPING, INSTALLING & BRACING OF TRUSSES. DESIGN CONFORMS WITH APPLICABLE PROVISIONS OF NDS (NATIONAL DESIGN SPEC. BY AF&PA) AND TPI. ITW BCG CONNECTOR PLATES ARE MADE OF 20/18/16GA (W,H/SS/K) ASTM A653 GRADE 40/60 (W, K/H,SS) GALV. STEEL. APPLY PLATES TO EACH FACE OF TRUSS AND, UNLESS OTHERWISE LOCATED ON THIS DESIGN, POSITION PER DRAWINGS 160A-Z. ANY INSPECTION OF PLATES FOLLOWED BY (1) SHALL BE PER ANNEX A3 OF TPI1-2002 SEC.3. A SEAL ON THIS DRAWING INDICATES ACCEPTANCE OF PROFESSIONAL ENGINEERING RESPONSIBILITY SOLELY FOR THE TRUSS COMPONENT DESIGN SHOWN. THE SUITABILITY AND USE OF THIS COMPONENT FOR ANY BUILDING IS THE RESPONSIBILITY OF THE BUILDING DESIGNER PER ANSI/TPI 1 SEC. 2.

JAMES F. COLLINS, JR. LICENSE No. 52212 STATE OF FLORIDA PROFESSIONAL ENGINEER

Apr 10 07

TC LL	20.0 PSF	REF	R215-- 70966
TC DL	10.0 PSF	DATE	04/10/07
BC DL	10.0 PSF	DRW	HCUSR215 07100070
BC LL	0.0 PSF	HC-ENG	DAB/AP *
TOT.LD.	40.0 PSF	SEQN-	88403
DUR.FAC.	1.25	FROM	LRB
SPACING	24.0"	JREF-	1T6E215_Z03

(4490-/LOT 20 COLUMBIA HOMESITES /Compass Builders -- , ** - A2)

Top chord 2x4 SP #2 N
Bot chord 2x4 SP #2 N
Webs 2x4 SP #2 N

Wind reactions based on MWFRS pressures.

Plates sized for a minimum of 3.00 sq.in./piece.

110 mph wind, 15.00 ft mean hgt, ASCE 7-02, CLOSED bldg, not located within 4.50 ft from roof edge, CAT II, EXP B, wind TC DL=5.0 psf, wind BC DL=5.0 psf. Iw=1.00 GCpi(+/-)=0.18

Deflection meets L/240 live and L/180 total load.

The overall height of this truss excluding overhang is 5-10-3.

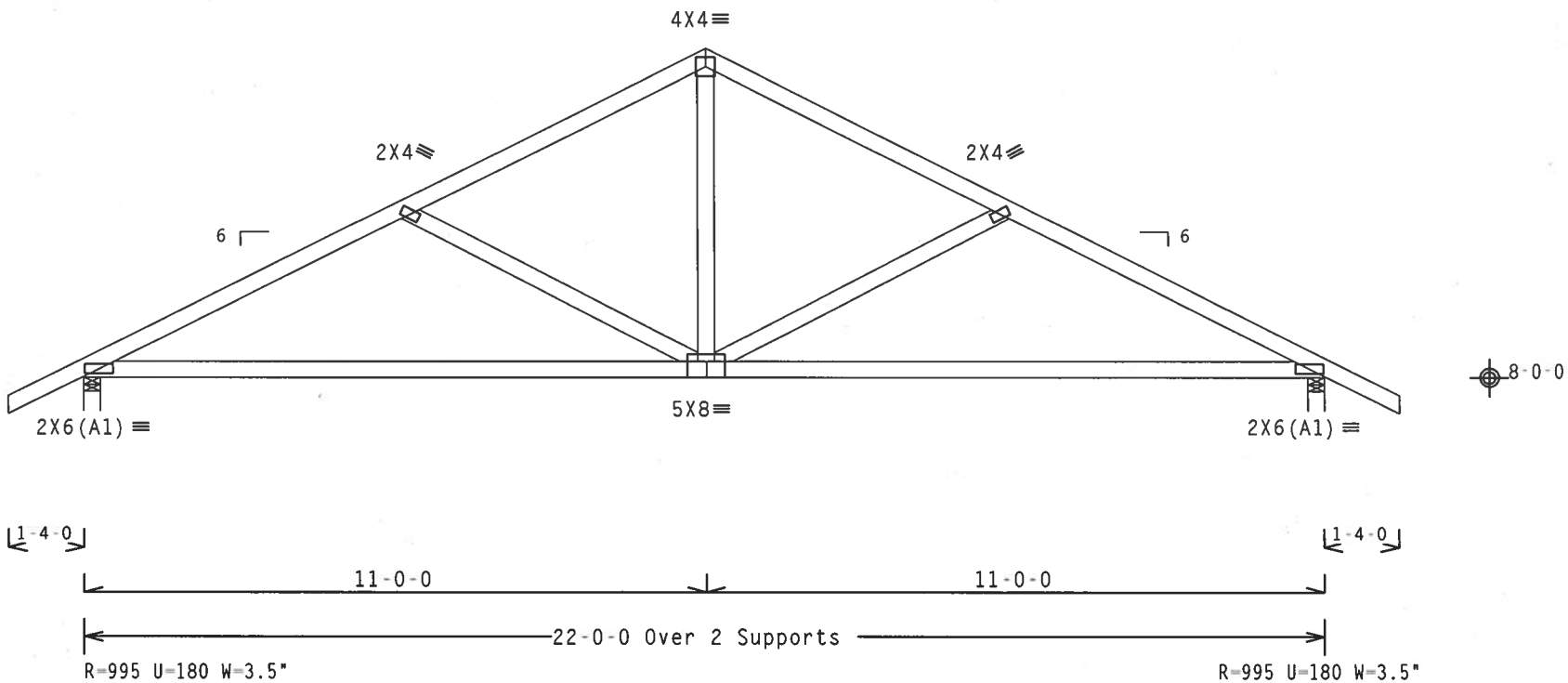

Design Crit: TPI-2002(STD)/FBC

PLT TYP. Wave Cq/RT=1.00(1.25)/10(0) 7.25.0503.00 QTY:1 FL/-/5/-/-/R/- Scale =.3125"/Ft.

ALPINE
ITW Building Components Group, Inc.
Haines City, FL 33844
FL Certificate of Authorization # 567

WARNING TRUSSES REQUIRE EXTREME CARE IN FABRICATION, HANDLING, SHIPPING, INSTALLING AND BRACING. REFER TO BCSI (BUILDING COMPONENT SAFETY INFORMATION), PUBLISHED BY TPI (TRUSS PLATE INSTITUTE, 218 NORTH LEE STREET, SUITE 312, ALEXANDRIA, VA, 22314) AND WTCA (WOOD TRUSS COUNCIL OF AMERICA, 6300 ENTERPRISE LANE, MADISON, WI 53719) FOR SAFETY PRACTICES PRIOR TO PERFORMING THESE FUNCTIONS. UNLESS OTHERWISE INDICATED TOP CHORD SHALL HAVE PROPERLY ATTACHED STRUCTURAL PANELS AND BOTTOM CHORD SHALL HAVE A PROPERLY ATTACHED RIGID CEILING.

IMPORTANT FURNISH A COPY OF THIS DESIGN TO THE INSTALLATION CONTRACTOR. ITW BCG, INC. SHALL NOT BE RESPONSIBLE FOR ANY DEVIATION FROM THIS DESIGN; ANY FAILURE TO BUILD THE TRUSS IN CONFORMANCE WITH TPI; OR FABRICATING, HANDLING, SHIPPING, INSTALLING & BRACING OF TRUSSES. DESIGN CONFORMS WITH APPLICABLE PROVISIONS OF NDS (NATIONAL DESIGN SPEC. BY AF&PA) AND TPI. ITW BCG CONNECTOR PLATES ARE MADE OF 20/18/16GA (W.H/SS/K) ASTM A653 GRADE 40/60 (W. K/H,SS) GALV. STEEL. APPLY PLATES TO EACH FACE OF TRUSS AND, UNLESS OTHERWISE LOCATED ON THIS DESIGN, POSITION PER DRAWINGS 160A-Z. ANY INSPECTION OF PLATES FOLLOWED BY (1) SHALL BE PER ANNEX A3 OF TPI1-2002 SEC.3. A SEAL ON THIS DRAWING INDICATES ACCEPTANCE OF PROFESSIONAL ENGINEERING RESPONSIBILITY SOLELY FOR THE TRUSS COMPONENT DESIGN SHOWN. THE SUITABILITY AND USE OF THIS COMPONENT FOR ANY BUILDING IS THE RESPONSIBILITY OF THE BUILDING DESIGNER PER ANSI/TPI 1 SEC. 2.

JAMES F. COLLINS JR. LICENSED No. 52212 STATE OF FLORIDA PROFESSIONAL ENGINEER

Apr

TC LL	20.0 PSF	REF	R215-- 70967
TC DL	10.0 PSF	DATE	04/10/07
BC DL	10.0 PSF	DRW	HCUSR215 07100060
BC LL	0.0 PSF	HC-ENG	DAB/AP *
TOT.LD.	40.0 PSF	SEQN-	88405
DUR.FAC.	1.25	FROM	LRB
SPACING	24.0"	JREF-	1T6E215_Z03

THIS DWG PREPARED FROM COMPUTER INPUT (LOADS & DIMENSIONS) SUBMITTED BY TRUSS MFR.

Top chord 2x4 SP #2 N
Bot chord 2x4 SP #2 N
Webs 2x4 SP #2 N

Wind reactions based on MWFRS pressures.

Deflection meets L/240 live and L/180 total load.

The overall height of this truss excluding overhang is 4-10-3.

110 mph wind, 15.00 ft mean hgt, ASCE 7-02, CLOSED bldg, not located within 4.50 ft from roof edge, CAT II, EXP B, wind TC DL=5.0 psf, wind BC DL=5.0 psf. Iw=1.00 GCpi(+/-)=0.18

In lieu of structural panels use purlins to brace all flat TC @ 24" OC.

Plates sized for a minimum of 3.00 sq.in./piece.

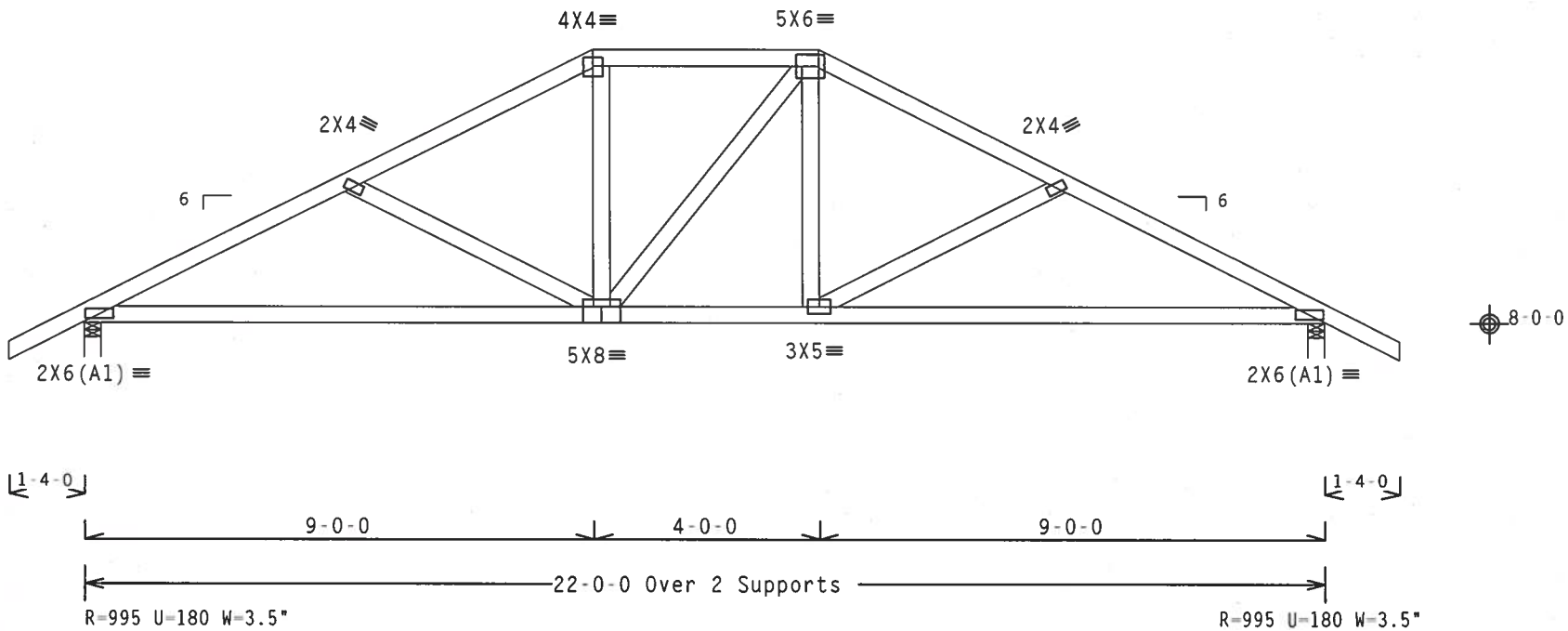

Design Crit: TPI-2002(STD)/FBC

PLT TYP. Wave Cq/RT=1.00(1.25)/10(0) 7.25.0503.00 QTY:1 FL/-/5/-/-/R/- Scale =.3125"/Ft.

ALPINE
ITW Building Components Group, Inc.
Haines City, FL 33844
FL Certificate of Authorization # 567

WARNING TRUSSES REQUIRE EXTREME CARE IN FABRICATION, HANDLING, SHIPPING, INSTALLING AND BRACING. REFER TO BCSI (BUILDING COMPONENT SAFETY INFORMATION), PUBLISHED BY TPI (TRUSS PLATE INSTITUTE, 218 NORTH LEE STREET, SUITE 312, ALEXANDRIA, VA. 22314) AND WTCA (WOOD TRUSS COUNCIL OF AMERICA, 6300 ENTERPRISE LANE, MADISON, WI 53719) FOR SAFETY PRACTICES PRIOR TO PERFORMING THESE FUNCTIONS. UNLESS OTHERWISE INDICATED TOP CHORD SHALL HAVE PROPERLY ATTACHED STRUCTURAL PANELS AND BOTTOM CHORD SHALL HAVE A PROPERLY ATTACHED RIGID CEILING.

IMPORTANTFURNISH A COPY OF THIS DESIGN TO THE INSTALLATION CONTRACTOR. ITW BCG, INC. SHALL NOT BE RESPONSIBLE FOR ANY DEVIATION FROM THIS DESIGN; ANY FAILURE TO BUILD THE TRUSS IN CONFORMANCE WITH TPI; OR FABRICATING, HANDLING, SHIPPING, INSTALLING & BRACING OF TRUSSES. DESIGN CONFORMS WITH APPLICABLE PROVISIONS OF NDS (NATIONAL DESIGN SPEC. BY AF&PA) AND TPI. ITW BCG CONNECTOR PLATES ARE MADE OF 20/18/16GA (W,H/SS/K) ASTM A653 GRADE 40/60 (W, K/H,SS) GALV. STEEL. APPLY PLATES TO EACH FACE OF TRUSS AND, UNLESS OTHERWISE LOCATED ON THIS DESIGN, POSITION PER DRAWINGS 160A-Z. ANY INSPECTION OF PLATES FOLLOWED BY (1) SHALL BE PER ANNEX A3 OF TPI1-2002 SEC.3. A SEAL ON THIS DRAWING INDICATES ACCEPTANCE OF PROFESSIONAL ENGINEERING RESPONSIBILITY SOLELY FOR THE TRUSS COMPONENT DESIGN SHOWN. THE SUITABILITY AND USE OF THIS COMPONENT FOR ANY BUILDING IS THE RESPONSIBILITY OF THE BUILDING DESIGNER PER ANSI/TPI 1 SEC. 2.

JAMES F. COLLINS JR. LICENSE No. 52212 STATE OF FLORIDA PROFESSIONAL ENGINEER

Apr 10, 07

TC LL	20.0 PSF	REF	R215-- 70968
TC DL	10.0 PSF	DATE	04/10/07
BC DL	10.0 PSF	DRW	HCUSR215 07100049
BC LL	0.0 PSF	HC-ENG	DAB/AP *
TOT.LD.	40.0 PSF	SEQN-	88407
DUR.FAC.	1.25	FROM	LRB
SPACING	24.0"	JREF-	1T6E215_Z03

Top chord 2x4 SP #2 Dense :T2 2x6 SP #2 N:
Bot chord 2x6 SP #2 Dense
Webs 2x4 SP #2 N

110 mph wind, 15.00 ft mean hgt, ASCE 7-02, CLOSED bldg, not located within 4.50 ft from roof edge, CAT II, EXP B, wind TC DL=5.0 psf, wind BC DL=5.0 psf. Iw=1.00 GCpi(+/-)=0.18

Wind reactions based on MWFRS pressures.

In lieu of structural panels use purlins to brace all flat TC @ 24" OC.

Deflection meets L/240 live and L/180 total load.

The overall height of this truss excluding overhang is 3-10-3.

SPECIAL LOADS
------(LUMBER DUR.FAC.=1.25 / PLATE DUR.FAC.=1.25)

TC -	From	62 PLF	at -1.33	to	62 PLF	at 7.00	
TC -	From	62 PLF	at 7.00	to	62 PLF	at 15.00	
TC -	From	62 PLF	at 15.00	to	62 PLF	at 23.33	
BC -	From	4 PLF	at -1.33	to	4 PLF	at 0.00	
BC -	From	20 PLF	at 0.00	to	20 PLF	at 22.00	
BC -	From	4 PLF	at 22.00	to	4 PLF	at 23.33	
TC -	189 LB Conc. Load at	7.06, 9.06, 11.00, 12.94, 14.94					
BC -	795 LB Conc. Load at	7.00, 15.00					
BC -	83 LB Conc. Load at	9.06, 11.00, 12.94					

Plates sized for a minimum of 3.00 sq.in./piece.

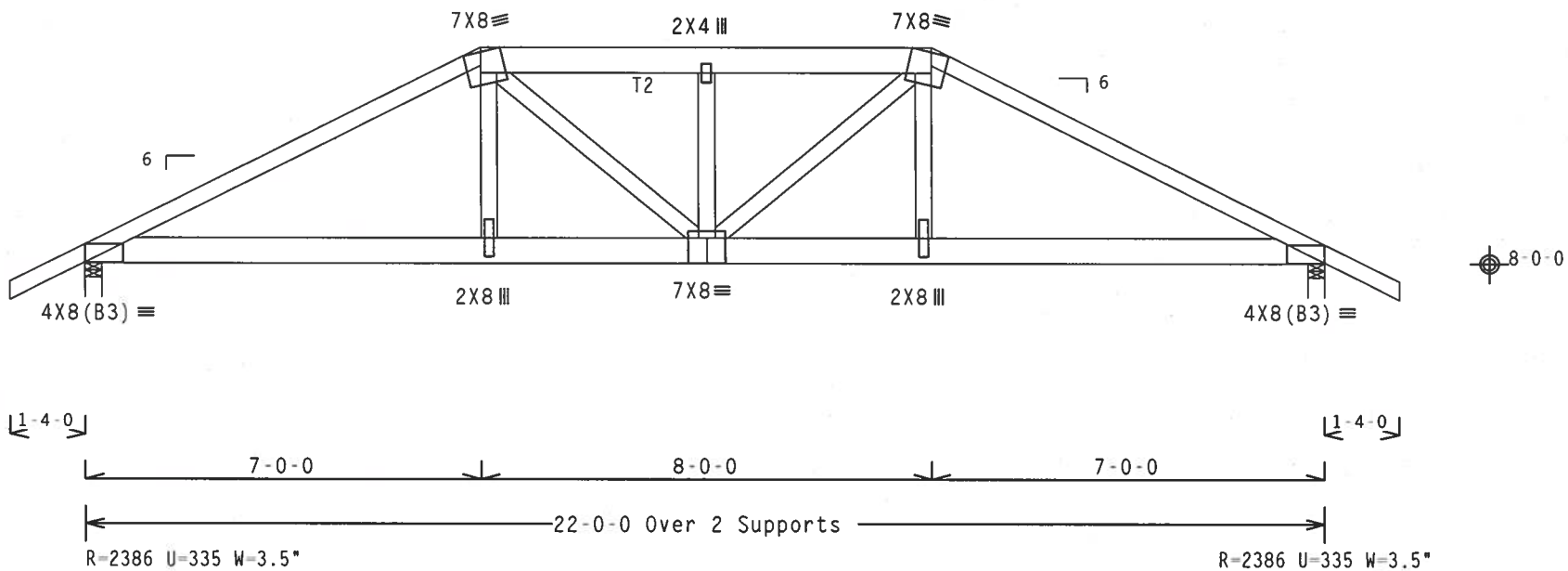

Design Crit: TPI-2002(STD)/FBC

PLT TYP. Wave | Cq/RT=1.00(1.25)/10(0) 7.25.0503.00 | QTY:1 | FL/-/5/-/-/R/- | Scale =.3125"/Ft.

ALPINE
ITW Building Components Group, Inc.
Haines City, FL 33844
FL Certificate of Authorization # 567

WARNING TRUSSES REQUIRE EXTREME CARE IN FABRICATION, HANDLING, SHIPPING, INSTALLING AND BRACING. REFER TO BCSI (BUILDING COMPONENT SAFETY INFORMATION), PUBLISHED BY TPI (TRUSS PLATE INSTITUTE, 218 NORTH LEE STREET, SUITE 312, ALEXANDRIA, VA, 22314) AND WTCA (WOOD TRUSS COUNCIL OF AMERICA, 6300 ENTERPRISE LANE, MADISON, WI 53719) FOR SAFETY PRACTICES PRIOR TO PERFORMING THESE FUNCTIONS. UNLESS OTHERWISE INDICATED TOP CHORD SHALL HAVE PROPERLY ATTACHED STRUCTURAL PANELS AND BOTTOM CHORD SHALL HAVE A PROPERLY ATTACHED RIGID CEILING.

IMPORTANTFURNISH A COPY OF THIS DESIGN TO THE INSTALLATION CONTRACTOR. ITW BCG, INC. SHALL NOT BE RESPONSIBLE FOR ANY DEVIATION FROM THIS DESIGN; ANY FAILURE TO BUILD THE TRUSS IN CONFORMANCE WITH TPI; OR FABRICATING, HANDLING, SHIPPING, INSTALLING & BRACING OF TRUSSES.
DESIGN CONFORMS WITH APPLICABLE PROVISIONS OF NDS (NATIONAL DESIGN SPEC, BY AF&PA) AND TPI. ITW BCG CONNECTOR PLATES ARE MADE OF 20/18/16GA (W,H/SS/K) ASTM A653 GRADE 40/60 (W, K/H,SS) GALV. STEEL. APPLY PLATES TO EACH FACE OF TRUSS AND, UNLESS OTHERWISE LOCATED ON THIS DESIGN, POSITION PER DRAWINGS 160A-Z. ANY INSPECTION OF PLATES FOLLOWED BY (1) SHALL BE PER ANNEX A3 OF TPI1-2002 SEC.3. A SEAL ON THIS DRAWING INDICATES ACCEPTANCE OF PROFESSIONAL ENGINEERING RESPONSIBILITY SOLELY FOR THE TRUSS COMPONENT DESIGN SHOWN. THE SUITABILITY AND USE OF THIS COMPONENT FOR ANY BUILDING IS THE RESPONSIBILITY OF THE BUILDING DESIGNER PER ANSI/TPI 1 SEC. 2.

JAMES F. COLLINS JR. LICENSE No. 52232 STATE OF FLORIDA PROFESSIONAL ENGINEER
Apr

TC LL	20.0 PSF	REF	R215-- 70969
TC DL	10.0 PSF	DATE	04/10/07
BC DL	10.0 PSF	DRW	HCUSR215 07100039
BC LL	0.0 PSF	HC-ENG	DAB/AP
TOT.LD.	40.0 PSF	SEQN-	88468
DUR.FAC.	1.25	FROM	LRB
SPACING	24.0"	JREF-	1T6E215_Z03

THIS DWG PREPARED FROM COMPUTER INPUT (LOADS & DIMENSIONS) SUBMITTED BY TRUSS MFR.

Top chord 2x4 SP #2 Dense :T2 2x6 SP #2 N: :T3 2x4 SP #2 N:
Bot chord 2x6 SP #2 N
Webs 2x4 SP #2 N

SPECIAL LOADS
------(LUMBER DUR.FAC.=1.25 / PLATE DUR.FAC.=1.25)

TC - From	62 PLF	at -1.33	to	62 PLF	at 7.00
TC - From	86 PLF	at 7.00	to	86 PLF	at 22.17
TC - From	62 PLF	at 22.17	to	62 PLF	at 30.50
BC - From	4 PLF	at -1.33	to	4 PLF	at 0.00
BC - From	20 PLF	at 0.00	to	20 PLF	at 7.00
BC - From	89 PLF	at 7.00	to	89 PLF	at 22.17
BC - From	20 PLF	at 22.17	to	20 PLF	at 29.17
BC - From	4 PLF	at 29.17	to	4 PLF	at 30.50
BC -	719 LB Conc. Load at 7.00, 22.17				

Deflection meets L/240 live and L/180 total load.

Plates sized for a minimum of 3.00 sq.in./piece.

2 COMPLETE TRUSSES REQUIRED

Nailing Schedule: (0.131"x3"_Gun_nails)
Top Chord: 1 Row @12.00" o.c.
Bot Chord: 1 Row @12.00" o.c.
Webs : 1 Row @ 4" o.c.
Use equal spacing between rows and stagger nails in each row to avoid splitting.

110 mph wind, 15.00 ft mean hgt, ASCE 7-02, CLOSED bldg, Located anywhere in roof, CAT II, EXP B, wind TC DL=5.0 psf, wind BC DL=5.0 psf.

In lieu of structural panels use purlins to brace all flat TC @ 24" OC.

*Scab brace. 100% length of member. Same size, species & grade or better. Attach with 10d Box or Gun (0.128"x3",min.)nails @ 6" OC.

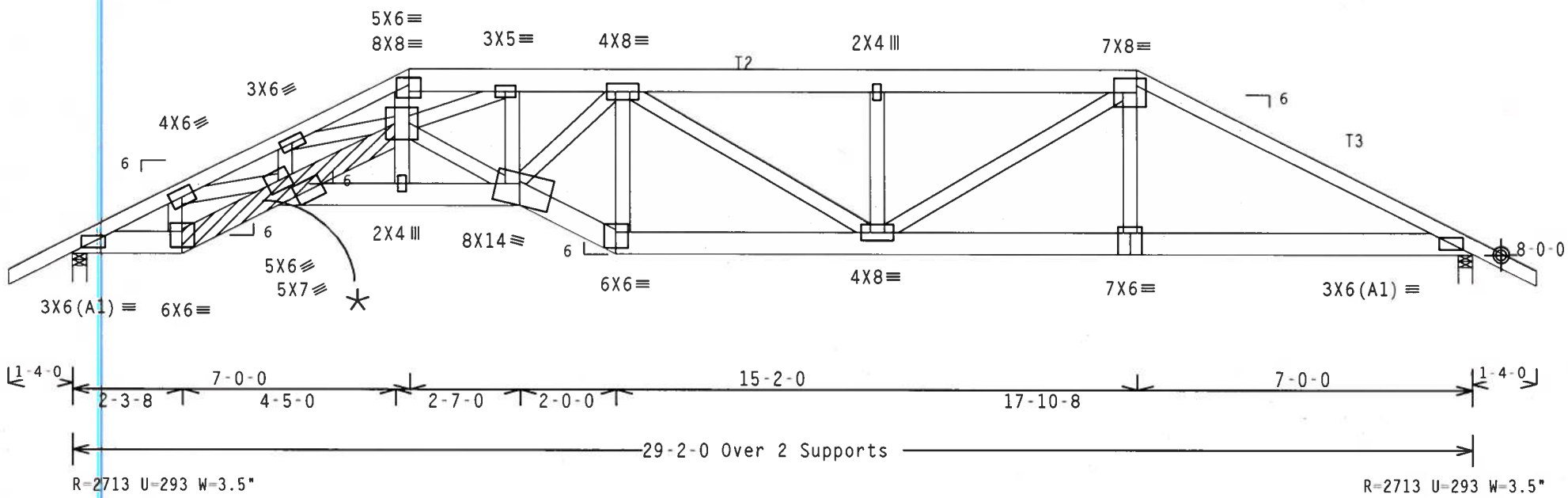

Design Crit: TPI-2002(STD)/FBC

PLT TYP. Wave Cq/RT=1.00(1.25)/10(0) 7.26.0608 21 QTY:1 FL/-/5/-/-/R/- Scale =.3125"/Ft.

ALPINE
ITW Building Components Group, Inc.
Haines City, FL 33844
FL Certificate of Authorization # 567

WARNING TRUSSES REQUIRE EXTREME CARE IN FABRICATION, HANDLING, SHIPPING, INSTALLING AND BRACING. REFER TO BCSI (BUILDING COMPONENT SAFETY INFORMATION), PUBLISHED BY TPI (TRUSS PLATE INSTITUTE, 218 NORTH LEE STREET, SUITE 312, ALEXANDRIA, VA, 22314) AND WTCA (WOOD TRUSS COUNCIL OF AMERICA, 6300 ENTERPRISE LANE, MADISON, WI 53719) FOR SAFETY PRACTICES PRIOR TO PERFORMING THESE FUNCTIONS. UNLESS OTHERWISE INDICATED TOP CHORD SHALL HAVE PROPERLY ATTACHED STRUCTURAL PANELS AND BOTTOM CHORD SHALL HAVE A PROPERLY ATTACHED RIGID CEILING.

IMPORTANTFURNISH A COPY OF THIS DESIGN TO THE INSTALLATION CONTRACTOR. ITW BCG, INC. SHALL NOT BE RESPONSIBLE FOR ANY DEVIATION FROM THIS DESIGN; ANY FAILURE TO BUILD THE TRUSS IN CONFORMANCE WITH TPI; OR FABRICATING, HANDLING, SHIPPING, INSTALLING & BRACING OF TRUSSES. DESIGN CONFORMS WITH APPLICABLE PROVISIONS OF NDS (NATIONAL DESIGN SPEC. BY AF&PA) AND TPI. ITW BCG CONNECTOR PLATES ARE MADE OF 20/18/16GA (W,H/SS/K) ASTM A653 GRADE 40/60 (W, K/H,SS) GALV. STEEL. APPLY PLATES TO EACH FACE OF TRUSS AND, UNLESS OTHERWISE LOCATED ON THIS DESIGN, POSITION PER DRAWINGS 160A-Z. ANY INSPECTION OF PLATES FOLLOWED BY (I) SHALL BE PER ANNEX A3 OF TPI1-2002 SEC.3. A SEAL ON THIS DRAWING INDICATES ACCEPTANCE OF PROFESSIONAL ENGINEERING RESPONSIBILITY SOLELY FOR THE TRUSS COMPONENT DESIGN SHOWN. THE SUITABILITY AND USE OF THIS COMPONENT FOR ANY BUILDING IS THE RESPONSIBILITY OF THE BUILDING DESIGNER PER ANSI/TPI 1 SEC. 2.

JAMES F. COLLINS JR. LICENSE No. 52212 STATE OF FLORIDA PROFESSIONAL ENGINEER
Apr 10, 2007

TC LL	20.0 PSF	REF	R215-- 70970
TC DL	10.0 PSF	DATE	04/10/07
BC DL	10.0 PSF	DRW	HCUSR215 07100043
BC LL	0.0 PSF	HC-ENG	DAB/AP
TOT.LD.	40.0 PSF	SEQN-	121356 REV
DUR.FAC.	1.25	FROM	LRB
SPACING	24.0"	JREF-	1T6E215_Z03

THIS DWG PREPARED FROM COMPUTER INPUT (LOADS & DIMENSIONS) SUBMITTED BY TRUSS MFR.

Top chord 2x4 SP #2 N
Bot chord 2x4 SP #2 N
Webs 2x4 SP #2 N

Wind reactions based on MWFRS pressures.

Deflection meets L/240 live and L/180 total load.

The overall height of this truss excluding overhang is 4-10-3.

110 mph wind, 15.00 ft mean hgt, ASCE 7-02, CLOSED bldg, not located within 4.50 ft from roof edge, CAT II, EXP B, wind TC DL=5.0 psf, wind BC DL=5.0 psf. Iw=1.00 GCpi(+/-)=0.18

In lieu of structural panels use purlins to brace all flat TC @ 24" OC.

Plates sized for a minimum of 3.00 sq.in./piece.

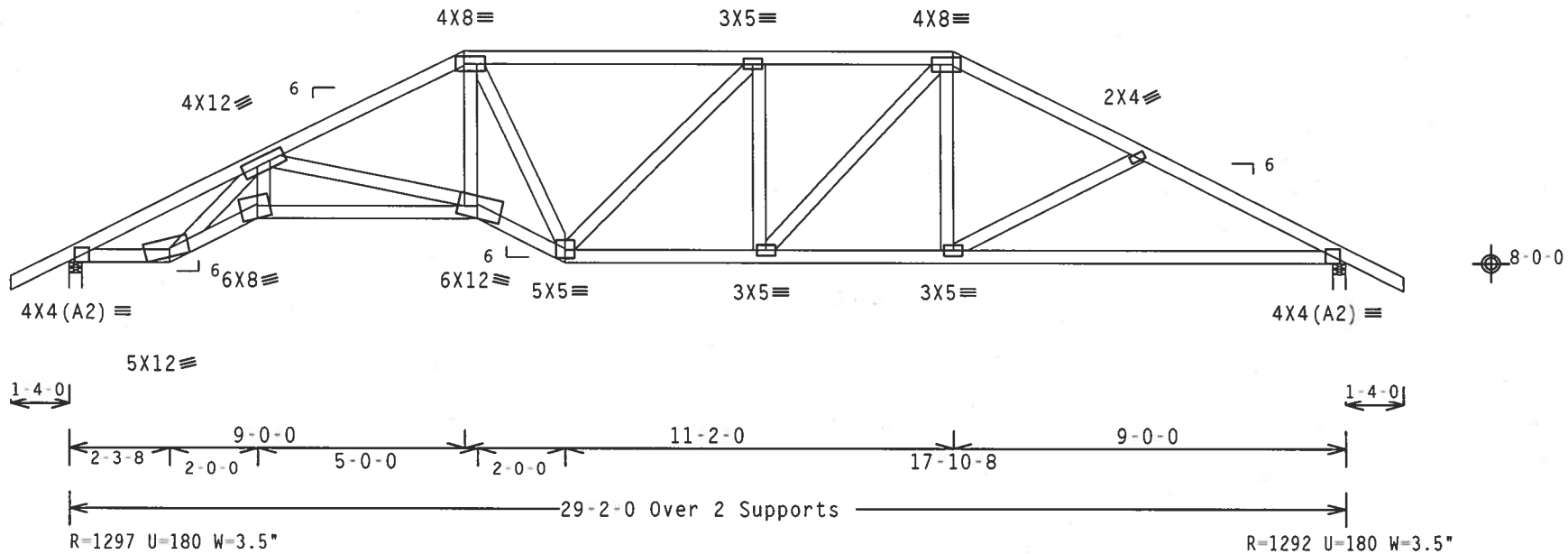

Design Crit: TPI-2002(STD)/FBC

PLT TYP. Wave Cg/RT=1.00(1.25)/10(0) 7.25.0503.00 QTY:1 FL/-/5/-/-/R/- Scale =.25"/Ft.

ALPINE
ITW Building Components Group, Inc.
Haines City, FL 33844
FL Certificate of Authorization # 567

WARNING TRUSSES REQUIRE EXTREME CARE IN FABRICATION, HANDLING, SHIPPING, INSTALLING AND BRACING. REFER TO BCSI (BUILDING COMPONENT SAFETY INFORMATION), PUBLISHED BY TPI (TRUSS PLATE INSTITUTE, 218 NORTH LEE STREET, SUITE 312, ALEXANDRIA, VA, 22314) AND WTCA (WOOD TRUSS COUNCIL OF AMERICA, 6300 ENTERPRISE LANE, MADISON, WI 53719) FOR SAFETY PRACTICES PRIOR TO PERFORMING THESE FUNCTIONS. UNLESS OTHERWISE INDICATED TOP CHORD SHALL HAVE PROPERLY ATTACHED STRUCTURAL PANELS AND BOTTOM CHORD SHALL HAVE A PROPERLY ATTACHED RIGID CEILING.

IMPORTANTFURNISH A COPY OF THIS DESIGN TO THE INSTALLATION CONTRACTOR. ITW BCG, INC. SHALL NOT BE RESPONSIBLE FOR ANY DEVIATION FROM THIS DESIGN; ANY FAILURE TO BUILD THE TRUSS IN CONFORMANCE WITH TPI; OR FABRICATING, HANDLING, SHIPPING, INSTALLING & BRACING OF TRUSSES.
DESIGN CONFORMS WITH APPLICABLE PROVISIONS OF NDS (NATIONAL DESIGN SPEC, BY AF&PA) AND TPI. ITW BCG CONNECTOR PLATES ARE MADE OF 20/18/16GA (W,H/SS/K) ASTM A653 GRADE 40/60 (W, K/H,SS) GALV. STEEL. APPLY PLATES TO EACH FACE OF TRUSS AND, UNLESS OTHERWISE LOCATED ON THIS DESIGN, POSITION PER DRAWINGS 160A-Z. ANY INSPECTION OF PLATES FOLLOWED BY (1) SHALL BE PER ANNEX A3 OF TPI1-2002 SEC.3. A SEAL ON THIS DRAWING INDICATES ACCEPTANCE OF PROFESSIONAL ENGINEERING RESPONSIBILITY SOLELY FOR THE TRUSS COMPONENT DESIGN SHOWN. THE SUITABILITY AND USE OF THIS COMPONENT FOR ANY BUILDING IS THE RESPONSIBILITY OF THE BUILDING DESIGNER PER ANSI/TPI 1 SEC. 2.

JAMES F. COLLINS, JR. LICENSE No. 52212 STATE OF FLORIDA PROFESSIONAL ENGINEER
Apr 10 07

TC LL	20.0 PSF	REF R215-- 70971
TC DL	10.0 PSF	DATE 04/10/07
BC DL	10.0 PSF	DRW HCUSR215 07100040
BC LL	0.0 PSF	HC-ENG DAB/AP *
TOT.LD.	40.0 PSF	SEQN- 88417
DUR.FAC.	1.25	FROM LRB
SPACING	24.0"	JREF- 1T6E215_Z03

Top chord 2x4 SP #2 N
Bot chord 2x4 SP #2 N
Webs 2x4 SP #2 N

Wind reactions based on MWFRS pressures.

In lieu of structural panels use purlins to brace all flat TC @ 24" OC.

Plates sized for a minimum of 3.00 sq.in./piece.

110 mph wind, 15.00 ft mean hgt, ASCE 7-02, CLOSED bldg, not located within 4.50 ft from roof edge, CAT II, EXP B, wind TC DL=5.0 psf, wind BC DL=5.0 psf. Iw=1.00 GCpi(+/-)=0.18

(A) 1x4 SP #3 or better "T" brace. 80% length of web member. Attach with 8d Box or Gun (0.113"x2.5",min.)nails @ 6" OC.

Deflection meets L/240 live and L/180 total load.

The overall height of this truss excluding overhang is 5-10-3.

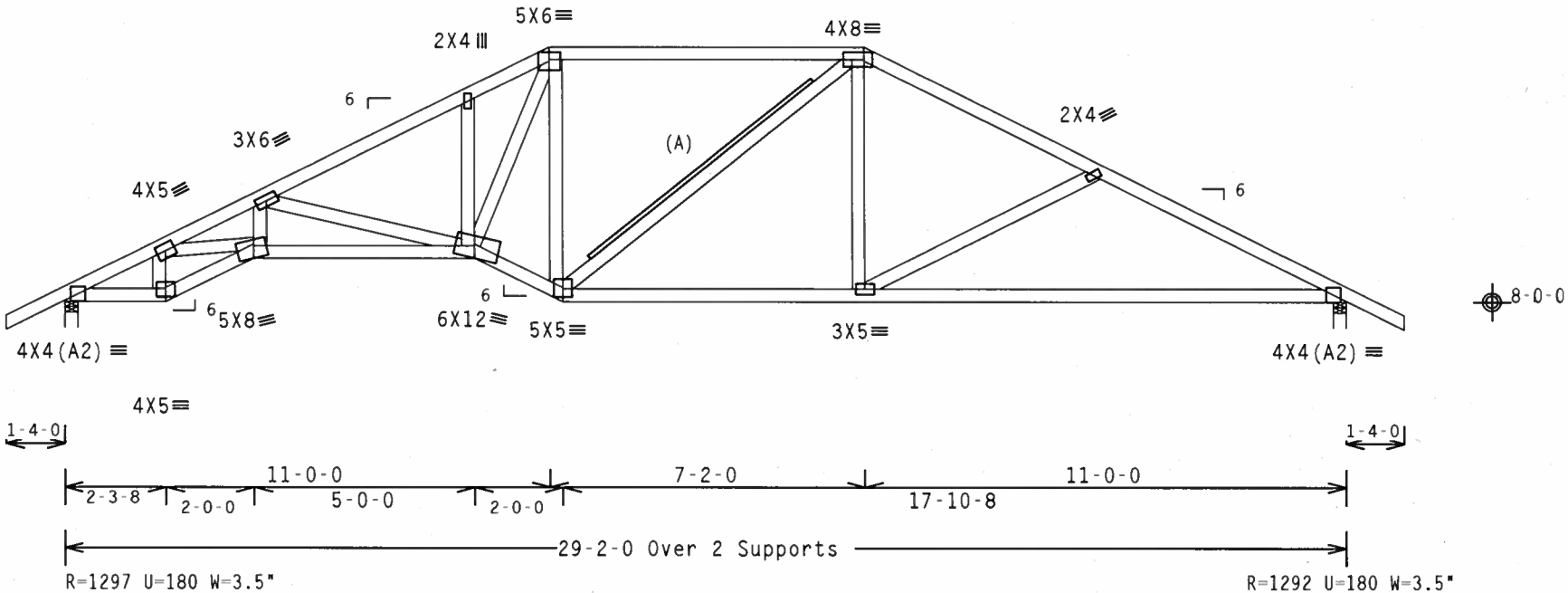

Design Crit: TPI-2002(STD)/FBC

PLT TYP. Wave Cq/RT=1.00(1.25)/10(0) 7.25.0503 QTY:1 FL/-/5/-/-/R/- Scale =.25"/Ft.

ALPINE
ITW Building Components Group, Inc.
Haines City, FL 33844
FL Certificate of Authorization # 567

WARNING TRUSSES REQUIRE EXTREME CARE IN FABRICATION, HANDLING, SHIPPING, INSTALLING AND BRACING. REFER TO BCSI (BUILDING COMPONENT SAFETY INFORMATION), PUBLISHED BY TPI (TRUSS PLATE INSTITUTE, 218 NORTH LEE STREET, SUITE 312, ALEXANDRIA, VA, 22314) AND WTCA (WOOD TRUSS COUNCIL OF AMERICA, 6300 ENTERPRISE LANE, MADISON, WI 53719) FOR SAFETY PRACTICES PRIOR TO PERFORMING THESE FUNCTIONS. UNLESS OTHERWISE INDICATED TOP CHORD SHALL HAVE PROPERLY ATTACHED STRUCTURAL PANELS AND BOTTOM CHORD SHALL HAVE A PROPERLY ATTACHED RIGID CEILING.

IMPORTANTFURNISH A COPY OF THIS DESIGN TO THE INSTALLATION CONTRACTOR. ITW BCG, INC. SHALL NOT BE RESPONSIBLE FOR ANY DEVIATION FROM THIS DESIGN; ANY FAILURE TO BUILD THE TRUSS IN COMFORMANCE WITH TPI; OR FABRICATING, HANDLING, SHIPPING, INSTALLING & BRACING OF TRUSSES.
DESIGN CONFORMS WITH APPLICABLE PROVISIONS OF NDS (NATIONAL DESIGN SPEC. BY AF&PA) AND TPI. ITW BCG CONNECTOR PLATES ARE MADE OF 20/18/16GA (W.H/SS/K) ASTM A653 GRADE 40/60 (W. K/H.SS) GALV. STEEL. APPLY PLATES TO EACH FACE OF TRUSS AND, UNLESS OTHERWISE LOCATED ON THIS DESIGN. POSITION PER DRAWINGS 160A-Z. ANY INSPECTION OF PLATES FOLLOWED BY (1) SHALL BE PER ANNEX A3 OF TPI1-2002 SEC.3. A SEAL ON THIS DRAWING INDICATES ACCEPTANCE OF PROFESSIONAL ENGINEERING RESPONSIBILITY SOLELY FOR THE TRUSS COMPONENT DESIGN SHOWN. THE SUITABILITY AND USE OF THIS COMPONENT FOR ANY BUILDING IS THE RESPONSIBILITY OF THE BUILDING DESIGNER PER ANSI/TPI 1 SEC. 2.

JAMES F. COLLINS JR. LICENSE No. 52242 STATE OF FLORIDA PROFESSIONAL ENGINEER
Apr 10 '07

TC LL	20.0 PSF	REF	R215-- 70972
TC DL	10.0 PSF	DATE	04/10/07
BC DL	10.0 PSF	DRW	HCUSR215 07100041
BC LL	0.0 PSF	HC-ENG	DAB/AP *
TOT.LD.	40.0 PSF	SEQN-	88562
DUR.FAC.	1.25	FROM	LRB
SPACING	24.0"	JREF-	1T6E215_Z03

THIS DWG PREPARED FROM COMPUTER INPUT (LOADS & DIMENSIONS) SUBMITTED BY TRUSS MFR.

Top chord 2x4 SP #2 N
Bot chord 2x4 SP #2 N
Webs 2x4 SP #2 N

Wind reactions based on MWFRS pressures.

Deflection meets L/240 live and L/180 total load.

The overall height of this truss excluding overhang is 6-10-3.

110 mph wind, 15.00 ft mean hgt, ASCE 7-02, CLOSED bldg, not located within 4.50 ft from roof edge, CAT II, EXP B, wind TC DL=5.0 psf, wind BC DL=5.0 psf. Iw=1.00 GCpi(+/-)=0.18

In lieu of structural panels use purlins to brace all flat TC @ 24" OC.

Plates sized for a minimum of 3.00 sq.in./piece.

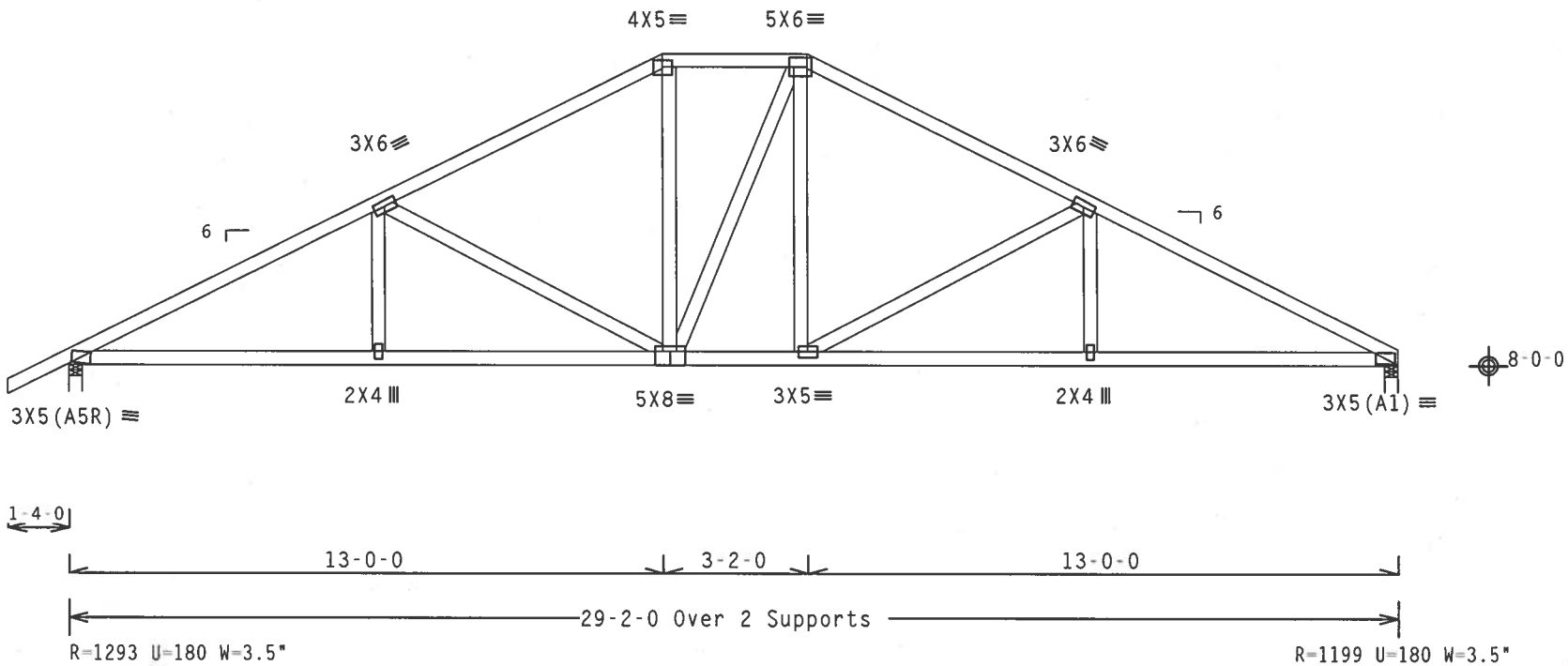

Design Crit: TPI-2002(STD)/FBC

PLT TYP. Wave Cq/RT=1.00(1.25)/10(0) 7.25.0503.00 QTY:1 FL/-/5/-/-/R/- Scale =.25"/Ft.

ALPINE
ITW Building Components Group, Inc.
Haines City, FL 33844
FL Certificate of Authorization # 567

WARNING TRUSSES REQUIRE EXTREME CARE IN FABRICATION, HANDLING, SHIPPING, INSTALLING AND BRACING. REFER TO BCSI (BUILDING COMPONENT SAFETY INFORMATION), PUBLISHED BY TPI (TRUSS PLATE INSTITUTE, 218 NORTH LEE STREET, SUITE 312, ALEXANDRIA, VA, 22314) AND WTCA (WOOD TRUSS COUNCIL OF AMERICA, 6300 ENTERPRISE LANE, MADISON, WI 53719) FOR SAFETY PRACTICES PRIOR TO PERFORMING THESE FUNCTIONS. UNLESS OTHERWISE INDICATED TOP CHORD SHALL HAVE PROPERLY ATTACHED STRUCTURAL PANELS AND BOTTOM CHORD SHALL HAVE A PROPERLY ATTACHED RIGID CEILING.

IMPORTANTFURNISH A COPY OF THIS DESIGN TO THE INSTALLATION CONTRACTOR. ITW BCG, INC. SHALL NOT BE RESPONSIBLE FOR ANY DEVIATION FROM THIS DESIGN; ANY FAILURE TO BUILD THE TRUSS IN CONFORMANCE WITH TPI; OR FABRICATING, HANDLING, SHIPPING, INSTALLING & BRACING OF TRUSSES. DESIGN CONFORMS WITH APPLICABLE PROVISIONS OF NDS (NATIONAL DESIGN SPEC. BY AF&PA) AND TPI. ITW BCG CONNECTOR PLATES ARE MADE OF 20/18/16GA (W,H/SS/K) ASTM A653 GRADE 40/60 (W, K/H,SS) GALV. STEEL. APPLY PLATES TO EACH FACE OF TRUSS AND, UNLESS OTHERWISE LOCATED ON THIS DESIGN, POSITION PER DRAWINGS 160A-Z. ANY INSPECTION OF PLATES FOLLOWED BY (1) SHALL BE PER ANNEX A3 OF TPI1-2002 SEC.3. A SEAL ON THIS DRAWING INDICATES ACCEPTANCE OF PROFESSIONAL ENGINEERING RESPONSIBILITY SOLELY FOR THE TRUSS COMPONENT DESIGN SHOWN. THE SUITABILITY AND USE OF THIS COMPONENT FOR ANY BUILDING IS THE RESPONSIBILITY OF THE BUILDING DESIGNER PER ANSI/TPI 1 SEC. 2.

JAMES F. COLLINS, JR. LICENSE No. 62212 STATE OF FLORIDA PROFESSIONAL ENGINEER

Apr 10, 2007

TC LL	20.0 PSF	REF	R215-- 70973
TC DL	10.0 PSF	DATE	04/10/07
BC DL	10.0 PSF	DRW	HCUSR215 07100043
BC LL	0.0 PSF	HC-ENG	DAB/AP *
TOT.LD.	40.0 PSF	SEQN-	88412
DUR.FAC.	1.25	FROM	LRB
SPACING	24.0"	JREF-	1T6E215_Z03

(4490-/LOT 20 COLUMBIA HOMESITES /Compass Builders -- , ** - A9)

Top chord 2x4 SP #2 N
Bot chord 2x4 SP #2 N
Webs 2x4 SP #2 N

Wind reactions based on MWFRS pressures.

Plates sized for a minimum of 3.00 sq.in./piece.

110 mph wind, 15.00 ft mean hgt, ASCE 7-02, CLOSED bldg, not located within 4.50 ft from roof edge, CAT II, EXP B, wind TC DL=5.0 psf, wind BC DL=5.0 psf. Iw=1.00 GCpi(+/-)=0.18

Deflection meets L/240 live and L/180 total load.

The overall height of this truss excluding overhang is 7-7-11.

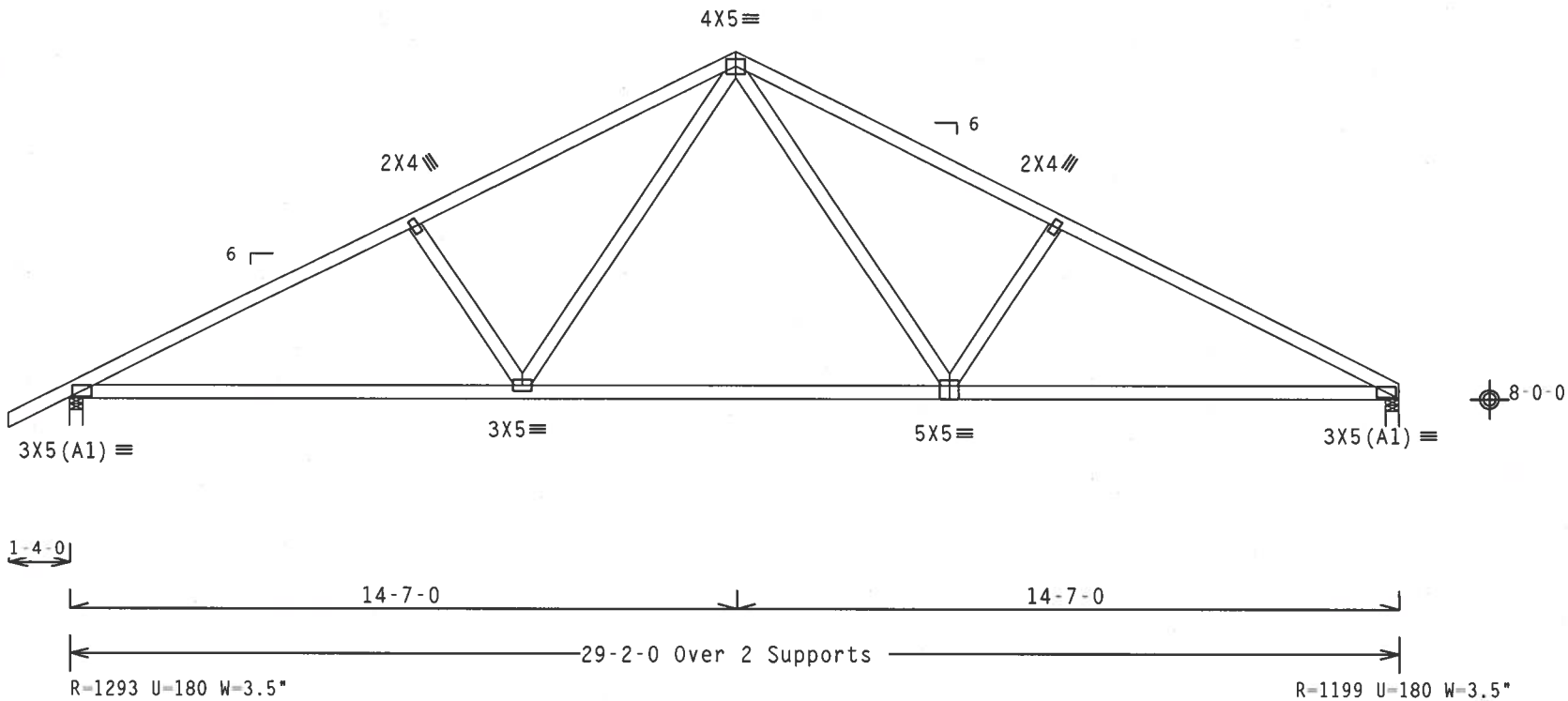

Design Crit: TPI-2002(STD)/FBC

PLT TYP. Wave Cq/RT=1.00(1.25)/10(0) 7.25.0503.00 QTY:3 FL/-/5/-/-/R/- Scale =.25"/Ft.

ALPINE
ITW Building Components Group, Inc.
Haines City, FL 33844
FL Certificate of Authorization # 567

WARNING TRUSSES REQUIRE EXTREME CARE IN FABRICATION, HANDLING, SHIPPING, INSTALLING AND BRACING. REFER TO BCSI (BUILDING COMPONENT SAFETY INFORMATION), PUBLISHED BY TPI (TRUSS PLATE INSTITUTE, 218 NORTH LEE STREET, SUITE 312, ALEXANDRIA, VA, 22314) AND WTCA (WOOD TRUSS COUNCIL OF AMERICA, 6300 ENTERPRISE LANE, MADISON, WI 53719) FOR SAFETY PRACTICES PRIOR TO PERFORMING THESE FUNCTIONS. UNLESS OTHERWISE INDICATED TOP CHORD SHALL HAVE PROPERLY ATTACHED STRUCTURAL PANELS AND BOTTOM CHORD SHALL HAVE A PROPERLY ATTACHED RIGID CEILING.

IMPORTANTFURNISH A COPY OF THIS DESIGN TO THE INSTALLATION CONTRACTOR. ITW BCG, INC. SHALL NOT BE RESPONSIBLE FOR ANY DEVIATION FROM THIS DESIGN; ANY FAILURE TO BUILD THE TRUSS IN CONFORMANCE WITH TPI; OR FABRICATING, HANDLING, SHIPPING, INSTALLING & BRACING OF TRUSSES. DESIGN CONFORMS WITH APPLICABLE PROVISIONS OF NDS (NATIONAL DESIGN SPEC, BY AF&PA) AND TPI. ITW BCG CONNECTOR PLATES ARE MADE OF 20/18/16GA (W,H/SS/K) ASTM A653 GRADE 40/60 (W, K/H,SS) GALV. STEEL. APPLY PLATES TO EACH FACE OF TRUSS AND, UNLESS OTHERWISE LOCATED ON THIS DESIGN, POSITION PER DRAWINGS 160A-Z. ANY INSPECTION OF PLATES FOLLOWED BY (1) SHALL BE PER ANNEX A3 OF TPI1-2002 SEC.3. A SEAL ON THIS DRAWING INDICATES ACCEPTANCE OF PROFESSIONAL ENGINEERING RESPONSIBILITY SOLELY FOR THE TRUSS COMPONENT DESIGN SHOWN. THE SUITABILITY AND USE OF THIS COMPONENT FOR ANY BUILDING IS THE RESPONSIBILITY OF THE BUILDING DESIGNER PER ANSI/TPI 1 SEC. 2.

JAMES F. COLLINS JR. LICENSE No. 52242 STATE OF FLORIDA PROFESSIONAL ENGINEER
Apr 10-07

TC LL	20.0 PSF	REF	R215-- 70974
TC DL	10.0 PSF	DATE	04/10/07
BC DL	10.0 PSF	DRW	HCUSR215 07100055
BC LL	0.0 PSF	HC-ENG	DAB/AP *
TOT.LD.	40.0 PSF	SEQN-	88414
DUR.FAC.	1.25	FROM	LRB
SPACING	24.0"	JREF-	1T6E215_Z03

THIS DWG PREPARED FROM COMPUTER INPUT (LOADS & DIMENSIONS) SUBMITTED BY TRUSS MFR.

Top chord 2x4 SP #2 N
Bot chord 2x4 SP #2 N
Webs 2x4 SP #2 N

Wind reactions based on MWFRS pressures.

Plates sized for a minimum of 3.00 sq.in./piece.

110 mph wind, 15.00 ft mean hgt, ASCE 7-02, CLOSED bldg, not located within 4.50 ft from roof edge, CAT II, EXP B, wind TC DL=5.0 psf, wind BC DL=5.0 psf. Iw=1.00 GCpi(+/-)=0.18

Deflection meets L/240 live and L/180 total load.

The overall height of this truss excluding overhang is 7-7-11.

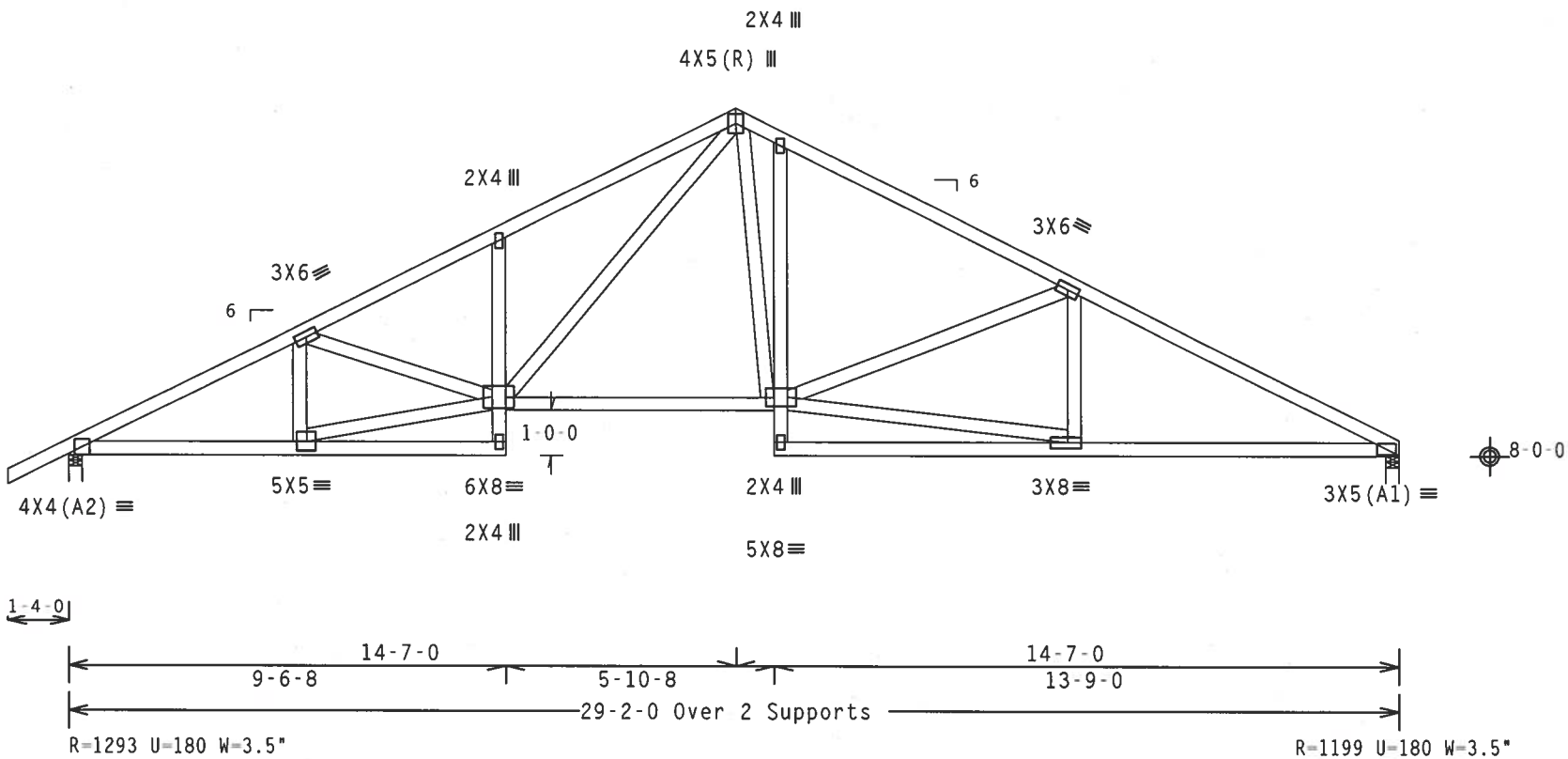

Design Crit: TPI-2002(STD)/FBC

PLT TYP. Wave Cq/RT=1.00(1.25)/10(0) 7.25.0503.00 QTY:2 FL/-/5/-/-/R/- Scale =.25"/Ft.

ALPINE
ITW Building Components Group, Inc.
Haines City, FL 33844
FL Certificate of Authorization # 567

WARNING TRUSSES REQUIRE EXTREME CARE IN FABRICATION, HANDLING, SHIPPING, INSTALLING AND BRACING. REFER TO BCSI (BUILDING COMPONENT SAFETY INFORMATION), PUBLISHED BY TPI (TRUSS PLATE INSTITUTE, 218 NORTH LEE STREET, SUITE 312, ALEXANDRIA, VA, 22314) AND WTCA (WOOD TRUSS COUNCIL OF AMERICA, 6300 ENTERPRISE LANE, MADISON, WI 53719) FOR SAFETY PRACTICES PRIOR TO PERFORMING THESE FUNCTIONS. UNLESS OTHERWISE INDICATED TOP CHORD SHALL HAVE PROPERLY ATTACHED STRUCTURAL PANELS AND BOTTOM CHORD SHALL HAVE A PROPERLY ATTACHED RIGID CEILING.

IMPORTANTFURNISH A COPY OF THIS DESIGN TO THE INSTALLATION CONTRACTOR. ITW BCG, INC. SHALL NOT BE RESPONSIBLE FOR ANY DEVIATION FROM THIS DESIGN; ANY FAILURE TO BUILD THE TRUSS IN CONFORMANCE WITH TPI; OR FABRICATING, HANDLING, SHIPPING, INSTALLING & BRACING OF TRUSSES.
DESIGN CONFORMS WITH APPLICABLE PROVISIONS OF NDS (NATIONAL DESIGN SPEC. BY AF&PA) AND TPI. ITW BCG CONNECTOR PLATES ARE MADE OF 20/18/16GA (W,H/SS/K) ASTM A653 GRADE 40/60 (W, K/H,SS) GALV. STEEL. APPLY PLATES TO EACH FACE OF TRUSS AND, UNLESS OTHERWISE LOCATED ON THIS DESIGN, POSITION PER DRAWINGS 160A-Z. ANY INSPECTION OF PLATES FOLLOWED BY (1) SHALL BE PER ANNEX A3 OF TPI1-2002 SEC.3. A SEAL ON THIS DRAWING INDICATES ACCEPTANCE OF PROFESSIONAL ENGINEERING RESPONSIBILITY SOLELY FOR THE TRUSS COMPONENT DESIGN SHOWN. THE SUITABILITY AND USE OF THIS COMPONENT FOR ANY BUILDING IS THE RESPONSIBILITY OF THE BUILDING DESIGNER PER ANSI/TPI 1 SEC. 2.

JAMES F. COLLINS JR. LICENSE No. 52242 STATE OF FLORIDA PROFESSIONAL ENGINEER
Apr

TC LL	20.0 PSF	REF	R215-- 70975
TC DL	10.0 PSF	DATE	04/10/07
BC DL	10.0 PSF	DRW	HCUSR215 07100042
BC LL	0.0 PSF	HC-ENG	DAB/AP *
TOT.LD.	40.0 PSF	SEQN-	88410
DUR.FAC.	1.25	FROM	LRB
SPACING	24.0"	JREF-	1T6E215_Z03

(4490-/LOT 20 COLUMBIA HOMESITES /Compass Builders -- , ** - A11)

Top chord 2x4 SP #2 N
Bot chord 2x4 SP #2 N :B3 2x4 SP SS:
Webs 2x4 SP #2 N :W4 2x4 SP SS:
:Rt Slider 2x4 SP #2 N: BLOCK LENGTH = 3.097'

Calculated horizontal deflection is 0.13" due to live load and 0.14" due to dead load.

Plates sized for a minimum of 3.00 sq.in./piece.

110 mph wind, 15.00 ft mean hgt, ASCE 7-02, CLOSED bldg, not located within 4.50 ft from roof edge, CAT II, EXP B, wind TC DL=5.0 psf, wind BC DL=5.0 psf. Iw=1.00 GCpi(+/-)=0.18

Wind reactions based on MWFRS pressures.

Deflection meets L/240 live and L/180 total load.

The overall height of this truss excluding overhang is 7-7-11.

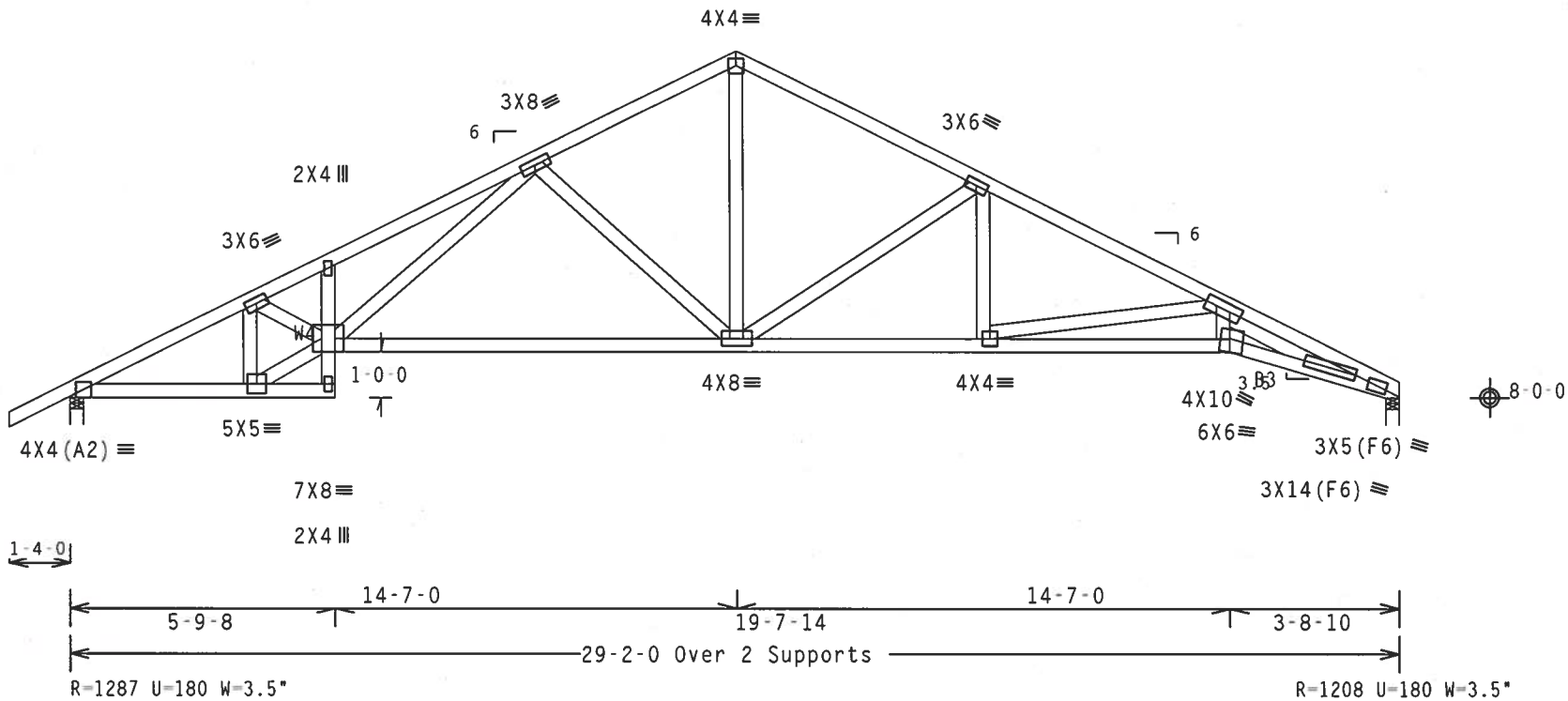

Design Crit: TPI-2002(STD)/FBC

PLT TYP. Wave Cq/RT=1.00(1.25)/10(0) 7.25.0503.00 QTY:2 FL/-/5/-/-/R/- Scale =.25"/Ft.

ALPINE
ITW Building Components Group, Inc.
Haines City, FL 33844
FL Certificate of Authorization # 567

WARNING TRUSSES REQUIRE EXTREME CARE IN FABRICATION, HANDLING, SHIPPING, INSTALLING AND BRACING. REFER TO BCSI (BUILDING COMPONENT SAFETY INFORMATION), PUBLISHED BY TPI (TRUSS PLATE INSTITUTE, 218 NORTH LEE STREET, SUITE 312, ALEXANDRIA, VA, 22314) AND WTCA (WOOD TRUSS COUNCIL OF AMERICA, 6300 ENTERPRISE LANE, MADISON, WI 53719) FOR SAFETY PRACTICES PRIOR TO PERFORMING THESE FUNCTIONS. UNLESS OTHERWISE INDICATED TOP CHORD SHALL HAVE PROPERLY ATTACHED STRUCTURAL PANELS AND BOTTOM CHORD SHALL HAVE A PROPERLY ATTACHED RIGID CEILING.

IMPORTANTFURNISH A COPY OF THIS DESIGN TO THE INSTALLATION CONTRACTOR. ITW BCG, INC. SHALL NOT BE RESPONSIBLE FOR ANY DEVIATION FROM THIS DESIGN; ANY FAILURE TO BUILD THE TRUSS IN CONFORMANCE WITH TPI; OR FABRICATING, HANDLING, SHIPPING, INSTALLING & BRACING OF TRUSSES. DESIGN CONFORMS WITH APPLICABLE PROVISIONS OF NDS (NATIONAL DESIGN SPEC. BY AF&PA) AND TPI. ITW BCG CONNECTOR PLATES ARE MADE OF 20/18/16GA (W,H/SS/K) ASTM A653 GRADE 40/60 (W, K/H,SS) GALV. STEEL. APPLY PLATES TO EACH FACE OF TRUSS AND, UNLESS OTHERWISE LOCATED ON THIS DESIGN, POSITION PER DRAWINGS 160A-Z. ANY INSPECTION OF PLATES FOLLOWED BY (I) SHALL BE PER ANNEX A3 OF TPI1-2002 SEC.3. A SEAL ON THIS DRAWING INDICATES ACCEPTANCE OF PROFESSIONAL ENGINEERING RESPONSIBILITY SOLELY FOR THE TRUSS COMPONENT DESIGN SHOWN. THE SUITABILITY AND USE OF THIS COMPONENT FOR ANY BUILDING IS THE RESPONSIBILITY OF THE BUILDING DESIGNER PER ANSI/TPI 1 SEC. 2.

JAMES F. COLLINS JR LICENSE No 62215 STATE OF FLORIDA PROFESSIONAL ENGINEER

Apr

TC LL	20.0 PSF	REF	R215-- 70976
TC DL	10.0 PSF	DATE	04/10/07
BC DL	10.0 PSF	DRW	HCUSR215 07100048
BC LL	0.0 PSF	HC-ENG	DAB/AP
TOT.LD.	40.0 PSF	SEQN-	88555
DUR.FAC.	1.25	FROM	LRB
SPACING	24.0"	JREF-	1T6E215_Z03

(4490-/LOT 20 COLUMBIA HOMESITES /Compass Builders -- , ** - A12)

Top chord 2x4 SP #2 N :T2 2x6 SP #2 N:
Bot chord 2x6 SP #2 N :B1 2x8 SP SS:
Webs 2x4 SP #2 N

SPECIAL LOADS
------(LUMBER DUR.FAC.=1.25 / PLATE DUR.FAC.=1.25)

TC - From	62 PLF	at -1.33	to	62 PLF	at 7.00
TC - From	62 PLF	at 7.00	to	62 PLF	at 14.17
TC - From	62 PLF	at 14.17	to	62 PLF	at 18.17
TC - From	62 PLF	at 18.17	to	62 PLF	at 30.50
BC - From	4 PLF	at -1.33	to	4 PLF	at 0.00
BC - From	21 PLF	at 0.00	to	21 PLF	at 3.72
BC - From	20 PLF	at 3.72	to	20 PLF	at 25.45
BC - From	21 PLF	at 25.45	to	21 PLF	at 29.17
BC - From	4 PLF	at 29.17	to	4 PLF	at 30.50
PLT-	78 LB	Conc. Load at (7.06,11.81)			
BC -	1721 LB	Conc. Load at 7.00			
PLB-	920 LB	Conc. Load at (7.00,9.04)			

In lieu of structural panels use purlins to brace all flat TC @ 24" OC.

Deflection meets L/240 live and L/180 total load.

The overall height of this truss excluding overhang is 5-10-3.

2 COMPLETE TRUSSES REQUIRED

Nailing Schedule: (0.131"x3"_Gun_nails)
Top Chord: 1 Row @12.00" o.c.
Bot Chord: 1 Row @12.00" o.c.
Webs : 1 Row @ 4" o.c.
Use equal spacing between rows and stagger nails in each row to avoid splitting.

110 mph wind, 15.00 ft mean hgt, ASCE 7-02, CLOSED bldg, Located anywhere in roof, CAT II, EXP B, wind TC DL=5.0 psf, wind BC DL=5.0 psf. Iw=1.00 GCpi(+/-)=0.18

Wind reactions based on MWFRS pressures.

Calculated horizontal deflection is 0.19" due to live load and 0.19" due to dead load.

Plates sized for a minimum of 3.00 sq.in./piece.

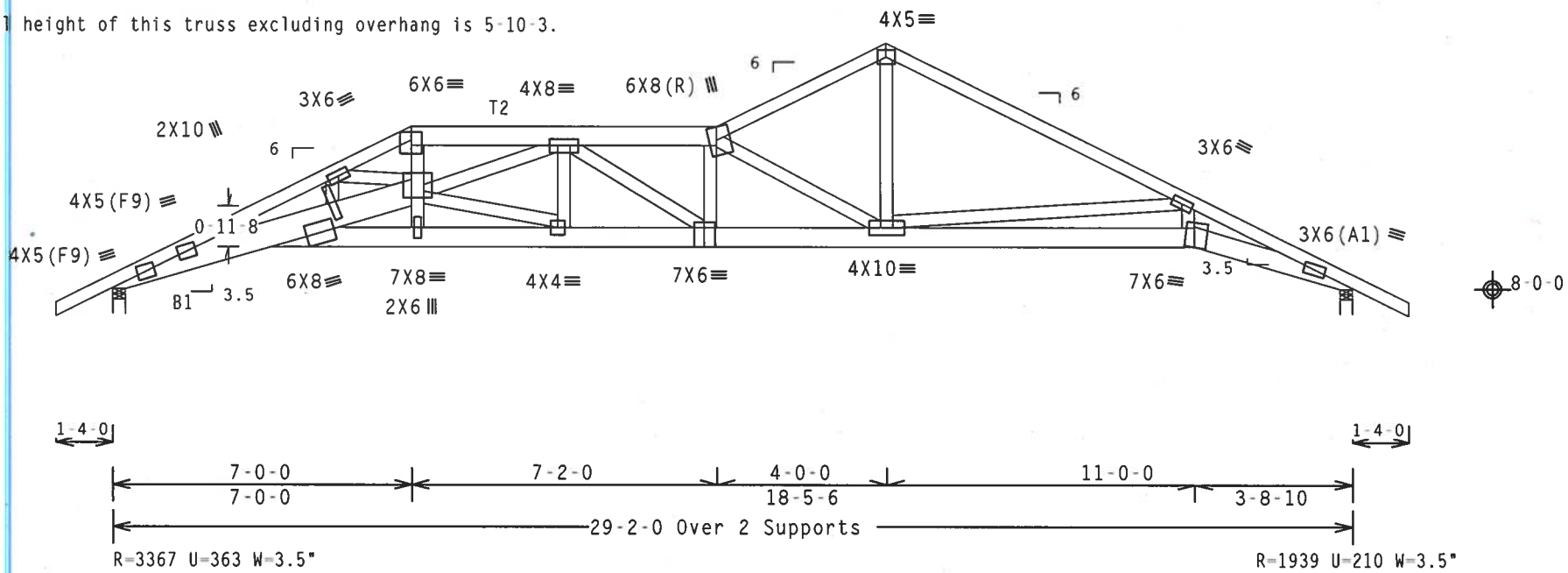

Design Crit: TPI-2002(STD)/FBC

PLT TYP. Wave Cq/RT=1.00(1.25)/10(0) 7.25.0503 S QTY:1 FL/-/5/-/-/R/- Scale =.25"/Ft.

ALPINE
ITW Building Components Group, Inc.
Haines City, FL 33844
FL Certificate of Authorization # 567

WARNING TRUSSES REQUIRE EXTREME CARE IN FABRICATION, HANDLING, SHIPPING, INSTALLING AND BRACING. REFER TO BCSI (BUILDING COMPONENT SAFETY INFORMATION), PUBLISHED BY TPI (TRUSS PLATE INSTITUTE, 218 NORTH LEE STREET, SUITE 312, ALEXANDRIA, VA, 22314) AND WTCA (WOOD TRUSS COUNCIL OF AMERICA, 6300 ENTERPRISE LANE, MADISON, WI 53719) FOR SAFETY PRACTICES PRIOR TO PERFORMING THESE FUNCTIONS. UNLESS OTHERWISE INDICATED TOP CHORD SHALL HAVE PROPERLY ATTACHED STRUCTURAL PANELS AND BOTTOM CHORD SHALL HAVE A PROPERLY ATTACHED RIGID CEILING.

IMPORTANTFURNISH A COPY OF THIS DESIGN TO THE INSTALLATION CONTRACTOR. ITW BCG, INC. SHALL NOT BE RESPONSIBLE FOR ANY DEVIATION FROM THIS DESIGN; ANY FAILURE TO BUILD THE TRUSS IN COMFORMANCE WITH TPI; OR FABRICATING, HANDLING, SHIPPING, INSTALLING & BRACING OF TRUSSES.
DESIGN CONFORMS WITH APPLICABLE PROVISIONS OF NDS (NATIONAL DESIGN SPEC. BY AF&PA) AND TPI. ITW BCG CONNECTOR PLATES ARE MADE OF 20/18/16GA (W,H/SS/K) ASTM A653 GRADE 40/60 (W, K/H,SS) GALV. STEEL. APPLY PLATES TO EACH FACE OF TRUSS AND. UNLESS OTHERWISE LOCATED ON THIS DESIGN, POSITION PER DRAWINGS 160A-Z. ANY INSPECTION OF PLATES FOLLOWED BY (1) SHALL BE PER ANNEX A3 OF TPI1-2002 SEC.3. A SEAL ON THIS DRAWING INDICATES ACCEPTANCE OF PROFESSIONAL ENGINEERING RESPONSIBILITY SOLELY FOR THE TRUSS COMPONENT DESIGN SHOWN. THE SUITABILITY AND USE OF THIS COMPONENT FOR ANY BUILDING IS THE RESPONSIBILITY OF THE BUILDING DESIGNER PER ANSI/TPI 1 SEC. 2.

JAMES F. COLLINS, JR. LICENSE No. 52212 STATE OF FLORIDA PROFESSIONAL ENGINEER
Apr 10 07

TC LL	20.0 PSF	REF	R215-- 70977
TC DL	10.0 PSF	DATE	04/10/07
BC DL	10.0 PSF	DRW	HCUSR215 07100061
BC LL	0.0 PSF	HC-ENG	DAB/AP
TOT.LD.	40.0 PSF	SEQN-	88640 REV
DUR.FAC.	1.25	FROM	LRB
SPACING	24.0"	JREF-	1T6E215_Z03

Top chord 2x4 SP #2 N :T4 2x4 SP SS:
Bot chord 2x4 SP #2 Dense :B2, B3 2x4 SP #2 N:
Webs 2x4 SP #2 N

Wind reactions based on MWFRS pressures.

In lieu of structural panels use purlins to brace all flat TC @ 24" OC.

Plates sized for a minimum of 3.00 sq.in./piece.

110 mph wind, 15.00 ft mean hgt, ASCE 7-02, CLOSED bldg, not located within 4.50 ft from roof edge, CAT II, EXP B, wind TC DL=5.0 psf, wind BC DL=5.0 psf. Iw=1.00 GCpi(+/-)=0.18

Calculated horizontal deflection is 0.21" due to live load and 0.21" due to dead load.

Deflection meets L/240 live and L/180 total load.

The overall height of this truss excluding overhang is 5-10-3.

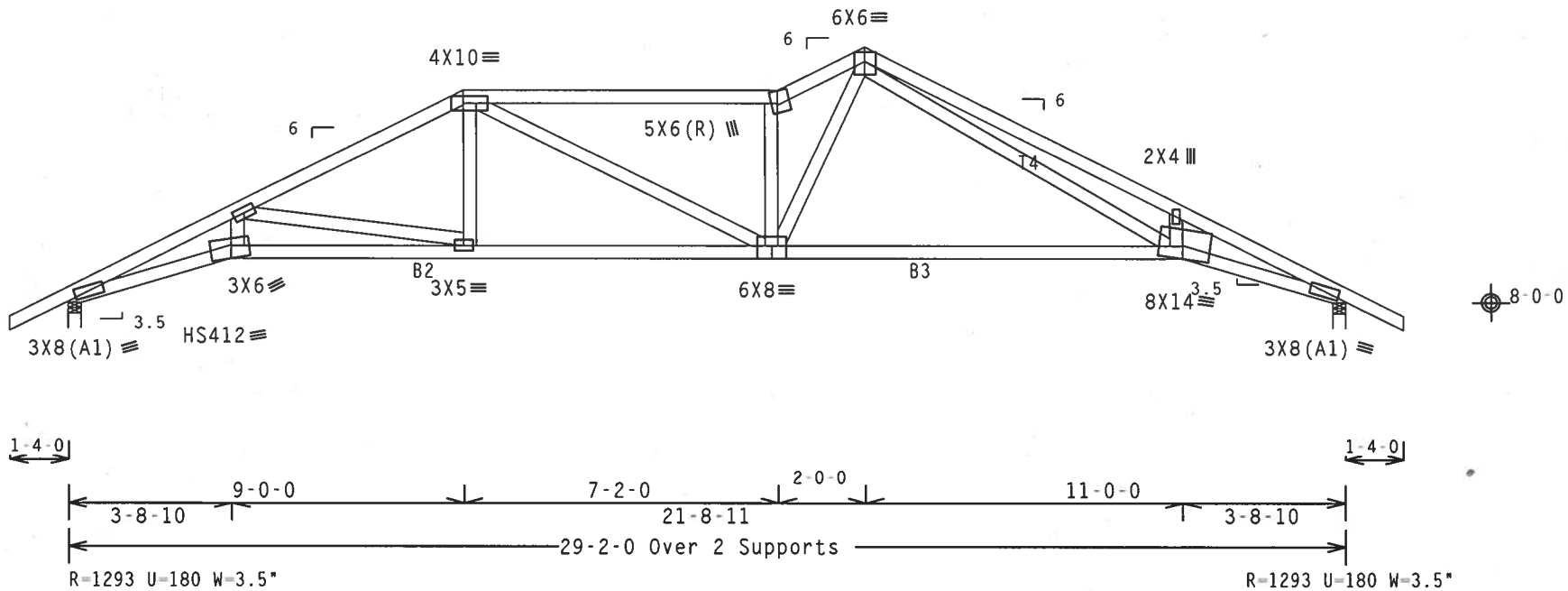

Design Crit: TPI-2002(STD)/FBC

PLT TYP. 20 Gauge HS,Wave Cq/RT=1.00(1.25)/10(0) 7.25.0503.00 QTY:1 FL/-/5/-/-/R/- Scale =.25"/Ft.

ALPINE
ITW Building Components Group, Inc.
Haines City, FL 33844
FL Certificate of Authorization # 567

WARNING TRUSSES REQUIRE EXTREME CARE IN FABRICATION, HANDLING, SHIPPING, INSTALLING AND BRACING. REFER TO BCSI (BUILDING COMPONENT SAFETY INFORMATION), PUBLISHED BY TPI (TRUSS PLATE INSTITUTE, 218 NORTH LEE STREET, SUITE 312, ALEXANDRIA, VA, 22314) AND WTCA (WOOD TRUSS COUNCIL OF AMERICA, 6300 ENTERPRISE LANE, MADISON, WI 53719) FOR SAFETY PRACTICES PRIOR TO PERFORMING THESE FUNCTIONS. UNLESS OTHERWISE INDICATED TOP CHORD SHALL HAVE PROPERLY ATTACHED STRUCTURAL PANELS AND BOTTOM CHORD SHALL HAVE A PROPERLY ATTACHED RIGID CEILING.

IMPORTANT FURNISH A COPY OF THIS DESIGN TO THE INSTALLATION CONTRACTOR. ITW BCG, INC. SHALL NOT BE RESPONSIBLE FOR ANY DEVIATION FROM THIS DESIGN; ANY FAILURE TO BUILD THE TRUSS IN CONFORMANCE WITH TPI; OR FABRICATING, HANDLING, SHIPPING, INSTALLING & BRACING OF TRUSSES. DESIGN CONFORMS WITH APPLICABLE PROVISIONS OF NDS (NATIONAL DESIGN SPEC. BY AF&PA) AND TPI. ITW BCG CONNECTOR PLATES ARE MADE OF 20/18/16GA (W,H/SS/K) ASTM A653 GRADE 40/60 (W, K/H,SS) GALV. STEEL. APPLY PLATES TO EACH FACE OF TRUSS AND, UNLESS OTHERWISE LOCATED ON THIS DESIGN, POSITION PER DRAWINGS 160A-Z. ANY INSPECTION OF PLATES FOLLOWED BY (1) SHALL BE PER ANNEX A3 OF TPI1-2002 SEC.3. A SEAL ON THIS DRAWING INDICATES ACCEPTANCE OF PROFESSIONAL ENGINEERING RESPONSIBILITY SOLELY FOR THE TRUSS COMPONENT DESIGN SHOWN. THE SUITABILITY AND USE OF THIS COMPONENT FOR ANY BUILDING IS THE RESPONSIBILITY OF THE BUILDING DESIGNER PER ANSI/TPI 1 SEC. 2.

JAMES F. COLLINS, JR. LICENSE No. 52212 STATE OF FLORIDA PROFESSIONAL ENGINEER
Apr 10, 07

TC LL	20.0 PSF	REF	R215-- 70978
TC DL	10.0 PSF	DATE	04/10/07
BC DL	10.0 PSF	DRW	HCUSR215 07100045
BC LL	0.0 PSF	HC-ENG	DAB/AP
TOT.LD.	40.0 PSF	SEQN-	88435
DUR.FAC.	1.25	FROM	LRB
SPACING	24.0"	JREF-	1T6E215_Z03

(4490-/LOT 20 COLUMBIA HOMESITES /Compass Builders -- , ** - A14)

Top chord 2x4 SP #2 N
Bot chord 2x4 SP #2 Dense :B1 2x4 SP SS: :B4 2x4 SP #2 N:
Webs 2x4 SP #2 N :W7 2x4 SP SS:
:Lt Slider 2x4 SP #2 N: BLOCK LENGTH = 3.097'

Calculated horizontal deflection is 0.13" due to live load and 0.14" due to dead load.

In lieu of structural panels use purlins to brace all flat TC @ 24" OC.

Plates sized for a minimum of 3.00 sq.in./piece.

110 mph wind, 15.00 ft mean hgt, ASCE 7-02, CLOSED bldg, not located within 4.50 ft from roof edge, CAT II, EXP B, wind TC DL=5.0 psf, wind BC DL=5.0 psf. Iw=1.00 GCpi(+/-)=0.18

Wind reactions based on MWFRS pressures.

(A) 2x6 SP #3 or better "T" brace. 80% length of web member. Attach with 16d Box or Gun (0.135"x3.5",min.)nails @ 6" OC.

Deflection meets L/240 live and L/180 total load.

The overall height of this truss excluding overhang is 5-10-3.

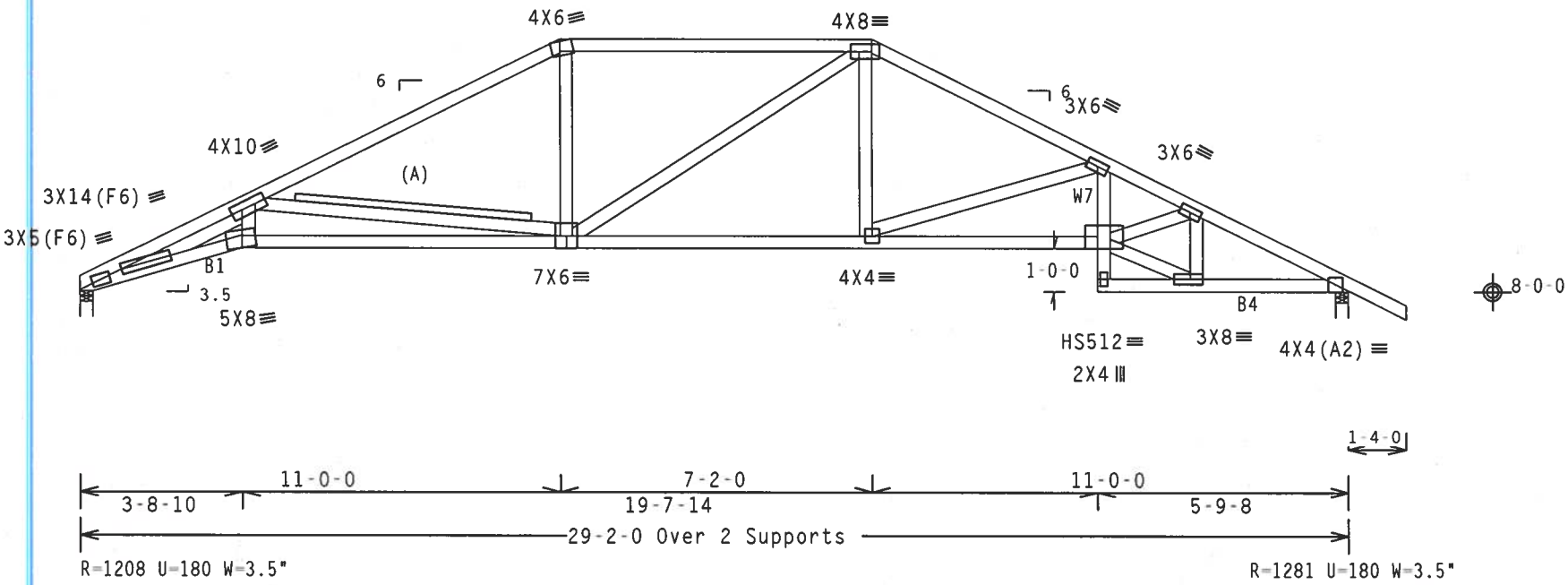

Design Crit: TPI-2002(STD)/FBC

PLT TYP. 20 Gauge HS,Wave Cq/RT=1.00(1.25)/10(0) 7.25.0503 QTY:1 FL/-/5/-/-/R/- Scale =.25"/Ft.

ALPINE
ITW Building Components Group, Inc.
Haines City, FL 33844
FL Certificate of Authorization # 567

WARNING TRUSSES REQUIRE EXTREME CARE IN FABRICATION, HANDLING, SHIPPING, INSTALLING AND BRACING. REFER TO BCSI (BUILDING COMPONENT SAFETY INFORMATION), PUBLISHED BY TPI (TRUSS PLATE INSTITUTE, 218 NORTH LEE STREET, SUITE 312, ALEXANDRIA, VA, 22314) AND WTCA (WOOD TRUSS COUNCIL OF AMERICA, 6300 ENTERPRISE LANE, MADISON, WI 53719) FOR SAFETY PRACTICES PRIOR TO PERFORMING THESE FUNCTIONS. UNLESS OTHERWISE INDICATED TOP CHORD SHALL HAVE PROPERLY ATTACHED STRUCTURAL PANELS AND BOTTOM CHORD SHALL HAVE A PROPERLY ATTACHED RIGID CEILING.

IMPORTANTFURNISH A COPY OF THIS DESIGN TO THE INSTALLATION CONTRACTOR. ITW BCG, INC. SHALL NOT BE RESPONSIBLE FOR ANY DEVIATION FROM THIS DESIGN; ANY FAILURE TO BUILD THE TRUSS IN COMFORMANCE WITH TPI; OR FABRICATING, HANDLING, SHIPPING, INSTALLING & BRACING OF TRUSSES.
DESIGN CONFORMS WITH APPLICABLE PROVISIONS OF NDS (NATIONAL DESIGN SPEC. BY AF&PA) AND TPI. ITW BCG CONNECTOR PLATES ARE MADE OF 20/18/16GA (W,H/SS/K) ASTM A653 GRADE 40/60 (W, K/H,SS) GALV. STEEL. APPLY PLATES TO EACH FACE OF TRUSS AND, UNLESS OTHERWISE LOCATED ON THIS DESIGN, POSITION PER DRAWINGS 160A-Z. ANY INSPECTION OF PLATES FOLLOWED BY (1) SHALL BE PER ANNEX A3 OF TPI1-2002 SEC.3. A SEAL ON THIS DRAWING INDICATES ACCEPTANCE OF PROFESSIONAL ENGINEERING RESPONSIBILITY SOLELY FOR THE TRUSS COMPONENT DESIGN SHOWN. THE SUITABILITY AND USE OF THIS COMPONENT FOR ANY BUILDING IS THE RESPONSIBILITY OF THE BUILDING DESIGNER PER ANSI/TPI 1 SEC. 2.

JAMES P. COLLINS JR. LICENSE No. 52212 STATE OF FLORIDA PROFESSIONAL ENGINEER
Apr 10 07

TC LL	20.0 PSF	REF	R215-- 70979
TC DL	10.0 PSF	DATE	04/10/07
BC DL	10.0 PSF	DRW	HCUSR215 07100046
BC LL	0.0 PSF	HC-ENG	DAB/AP
TOT.LD.	40.0 PSF	SEQN-	88607
DUR.FAC.	1.25	FROM	LRB
SPACING	24.0"	JREF-	1T6E215_Z03

THIS DWG PREPARED FROM COMPUTER INPUT (LOADS & DIMENSIONS) SUBMITTED BY TRUSS MFR.

Top chord 2x4 SP #2 N
Bot chord 2x4 SP #2 Dense :B1 2x4 SP #2 N:
Webs 2x4 SP #2 N

Wind reactions based on MWFRS pressures.

In lieu of structural panels use purlins to brace all flat TC @ 24" OC.

(**) 3 plate(s) require special positioning. Refer to scaled plate plot details for special positioning requirements.

110 mph wind, 15.00 ft mean hgt, ASCE 7-02, CLOSED bldg, not located within 4.50 ft from roof edge, CAT II, EXP B, wind TC DL=5.0 psf, wind BC DL=5.0 psf. Iw=1.00 GCpi(+/-)=0.18

Deflection meets L/240 live and L/180 total load.

Plates sized for a minimum of 3.00 sq.in./piece.

The overall height of this truss excluding overhang is 5-10-3.

DM1 (1) 2x4X5-0-0 SP #2 Dense Bottom chord scab centered 19-6-0 from left end. Attach to one face of chord with (2) rows of 0.131"x3"_Gun_nails @ 6" O.C., staggered 3".

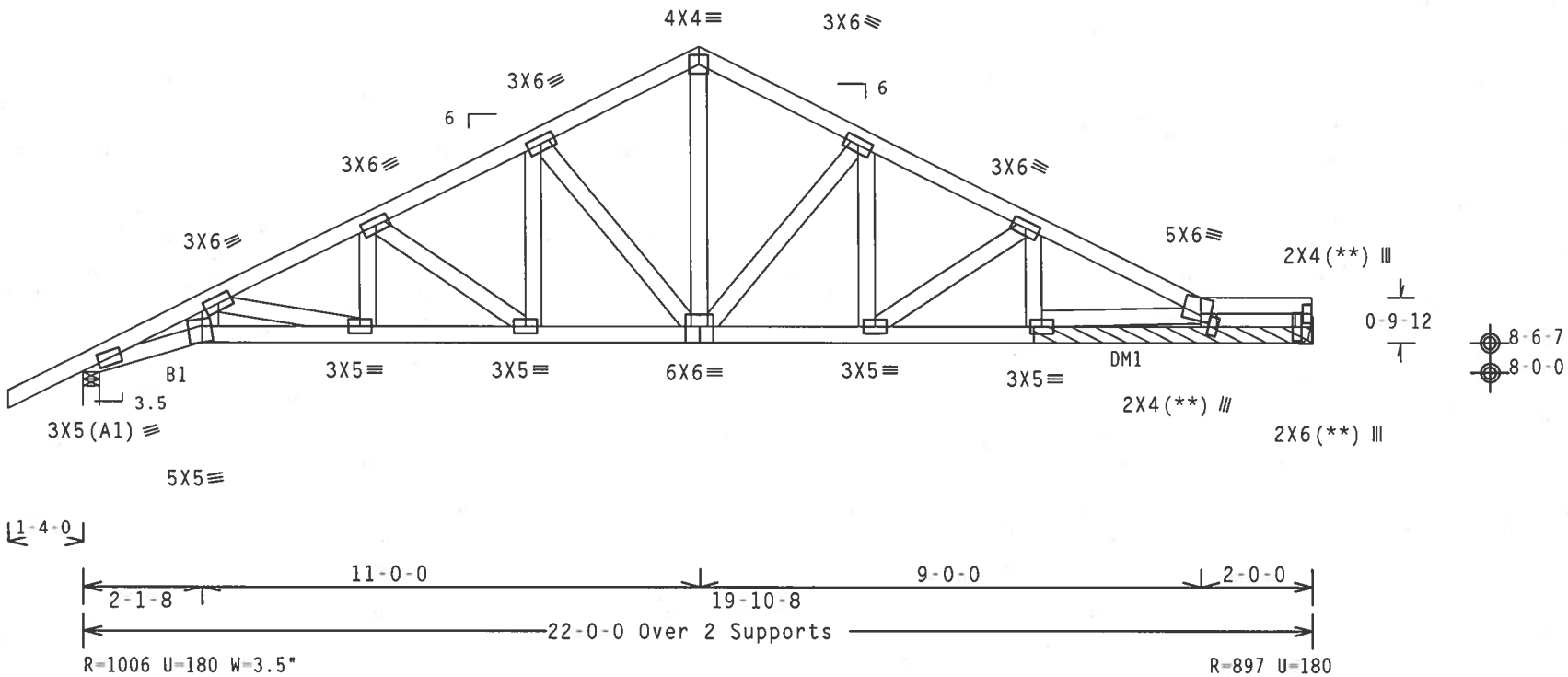

Design Crit: TPI-2002(STD)/FBC

PLT TYP. Wave | Cq/RT=1.00(1.25)/10(0) 7.25.0503.00 | QTY:1 | FL/-/5/-/-/R/- | Scale =.3125"/Ft.

ALPINE
ITW Building Components Group, Inc.
Haines City, FL 33844
FL Certificate of Authorization # 567

WARNING TRUSSES REQUIRE EXTREME CARE IN FABRICATION, HANDLING, SHIPPING, INSTALLING AND BRACING. REFER TO BCSI (BUILDING COMPONENT SAFETY INFORMATION), PUBLISHED BY TPI (TRUSS PLATE INSTITUTE, 218 NORTH LEE STREET, SUITE 312, ALEXANDRIA, VA. 22314) AND WTCA (WOOD TRUSS COUNCIL OF AMERICA, 6300 ENTERPRISE LANE, MADISON, WI 53719) FOR SAFETY PRACTICES PRIOR TO PERFORMING THESE FUNCTIONS. UNLESS OTHERWISE INDICATED TOP CHORD SHALL HAVE PROPERLY ATTACHED STRUCTURAL PANELS AND BOTTOM CHORD SHALL HAVE A PROPERLY ATTACHED RIGID CEILING.

IMPORTANTFURNISH A COPY OF THIS DESIGN TO THE INSTALLATION CONTRACTOR. ITW BCG, INC. SHALL NOT BE RESPONSIBLE FOR ANY DEVIATION FROM THIS DESIGN; ANY FAILURE TO BUILD THE TRUSS IN CONFORMANCE WITH TPI; OR FABRICATING, HANDLING, SHIPPING, INSTALLING & BRACING OF TRUSSES.
DESIGN CONFORMS WITH APPLICABLE PROVISIONS OF NDS (NATIONAL DESIGN SPEC. BY AF&PA) AND TPI. ITW BCG CONNECTOR PLATES ARE MADE OF 20/18/16GA (W,H/SS/K) ASTM A653 GRADE 40/60 (W, K/H,SS) GALV. STEEL. APPLY PLATES TO EACH FACE OF TRUSS AND, UNLESS OTHERWISE LOCATED ON THIS DESIGN, POSITION PER DRAWINGS 160A-Z. ANY INSPECTION OF PLATES FOLLOWED BY (1) SHALL BE PER ANNEX A3 OF TPI1-2002 SEC.3. A SEAL ON THIS DRAWING INDICATES ACCEPTANCE OF PROFESSIONAL ENGINEERING RESPONSIBILITY SOLELY FOR THE TRUSS COMPONENT DESIGN SHOWN. THE SUITABILITY AND USE OF THIS COMPONENT FOR ANY BUILDING IS THE RESPONSIBILITY OF THE BUILDING DESIGNER PER ANSI/TPI 1 SEC. 2.

JAMES F. COLLINS, JR. LICENSE No. 52212 STATE OF FLORIDA PROFESSIONAL ENGINEER
Apr

TC LL	20.0 PSF	REF	R215-- 70980
TC DL	10.0 PSF	DATE	04/10/07
BC DL	10.0 PSF	DRW	HCUSR215 07100047
BC LL	0.0 PSF	HC-ENG	DAB/AP
TOT.LD.	40.0 PSF	SEQN-	88620
DUR.FAC.	1.25	FROM	LRB
SPACING	24.0"	JREF-	1T6E215_Z03

Top chord 2x4 SP #2 N
Bot chord 2x4 SP #2 N
Webs 2x4 SP #2 N

Wind reactions based on MWFRS pressures.

(A) Continuous lateral bracing equally spaced on member.

Deflection meets L/240 live and L/180 total load.

The overall height of this truss excluding overhang is 5-10-3.

110 mph wind, 15.00 ft mean hgt, ASCE 7-02, CLOSED bldg, not located within 4.50 ft from roof edge, CAT II, EXP B, wind TC DL=5.0 psf, wind BC DL=5.0 psf. Iw=1.00 GCpi(+/-)=0.18

Right end vertical not exposed to wind pressure.

In lieu of structural panels use purlins to brace all flat TC @ 24" OC.

Plates sized for a minimum of 3.00 sq.in./piece.

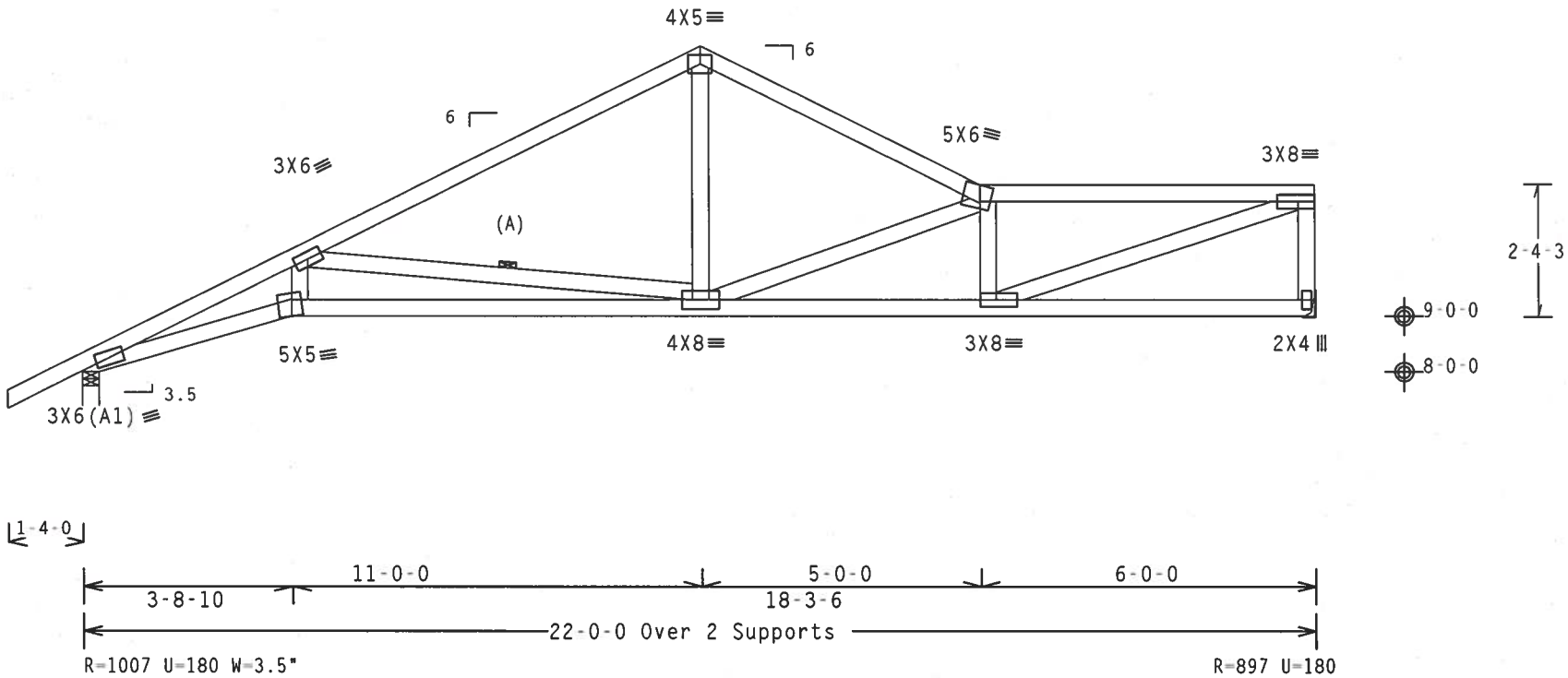

Design Crit: TPI-2002(STD)/FBC

PLT TYP. Wave — Cq/RT=1.00(1.25)/10(0) 7.25.0503 — QTY:1 — FL/-/5/-/-/R/- — Scale =.3125"/Ft.

ALPINE
ITW Building Components Group, Inc.
Haines City, FL 33844
FL Certificate of Authorization # 567

WARNING TRUSSES REQUIRE EXTREME CARE IN FABRICATION, HANDLING, SHIPPING, INSTALLING AND BRACING. REFER TO BCSI (BUILDING COMPONENT SAFETY INFORMATION), PUBLISHED BY TPI (TRUSS PLATE INSTITUTE, 218 NORTH LEE STREET, SUITE 312, ALEXANDRIA, VA, 22314) AND WTCA (WOOD TRUSS COUNCIL OF AMERICA, 6300 ENTERPRISE LANE, MADISON, WI 53719) FOR SAFETY PRACTICES PRIOR TO PERFORMING THESE FUNCTIONS. UNLESS OTHERWISE INDICATED TOP CHORD SHALL HAVE PROPERLY ATTACHED STRUCTURAL PANELS AND BOTTOM CHORD SHALL HAVE A PROPERLY ATTACHED RIGID CEILING.

IMPORTANTFURNISH A COPY OF THIS DESIGN TO THE INSTALLATION CONTRACTOR. ITW BCG, INC. SHALL NOT BE RESPONSIBLE FOR ANY DEVIATION FROM THIS DESIGN; ANY FAILURE TO BUILD THE TRUSS IN COMFORMANCE WITH TPI; OR FABRICATING, HANDLING, SHIPPING, INSTALLING & BRACING OF TRUSSES. DESIGN CONFORMS WITH APPLICABLE PROVISIONS OF NDS (NATIONAL DESIGN SPEC, BY AF&PA) AND TPI. ITW BCG CONNECTOR PLATES ARE MADE OF 20/18/16GA (W,H/SS/K) ASTM A653 GRADE 40/60 (W, K/H,SS) GALV. STEEL. APPLY PLATES TO EACH FACE OF TRUSS AND, UNLESS OTHERWISE LOCATED ON THIS DESIGN, POSITION PER DRAWINGS 160A-Z. ANY INSPECTION OF PLATES FOLLOWED BY (1) SHALL BE PER ANNEX A3 OF TPI1-2002 SEC.3. A SEAL ON THIS DRAWING INDICATES ACCEPTANCE OF PROFESSIONAL ENGINEERING RESPONSIBILITY SOLELY FOR THE TRUSS COMPONENT DESIGN SHOWN. THE SUITABILITY AND USE OF THIS COMPONENT FOR ANY BUILDING IS THE RESPONSIBILITY OF THE BUILDING DESIGNER PER ANSI/TPI 1 SEC. 2.

JAMES F. COLLINS JR. LICENSE No. 22212 STATE OF FLORIDA PROFESSIONAL ENGINEER
Apr 10, 2007

TC LL	20.0 PSF	REF	R215-- 70981
TC DL	10.0 PSF	DATE	04/10/07
BC DL	10.0 PSF	DRW	HCUSR215 07100065
BC LL	0.0 PSF	HC-ENG	DAB/AP
TOT.LD.	40.0 PSF	SEQN-	88495
DUR.FAC.	1.25	FROM	LRB
SPACING	24.0"	JREF-	1T6E215_Z03

THIS DWG PREPARED FROM COMPUTER INPUT (LOADS & DIMENSIONS) SUBMITTED BY TRUSS MFR.

Top chord 2x4 SP #2 N
Bot chord 2x4 SP #2 N
Webs 2x4 SP #2 N

Wind reactions based on MWFRS pressures.

In lieu of structural panels use purlins to brace all flat TC @ 24" OC.

Plates sized for a minimum of 3.00 sq.in./piece.

110 mph wind, 15.00 ft mean hgt, ASCE 7-02, CLOSED bldg, not located within 4.50 ft from roof edge, CAT II, EXP B, wind TC DL=5.0 psf, wind BC DL=5.0 psf. Iw=1.00 GCpi(+/-)=0.18

(A) Continuous lateral bracing equally spaced on member.

Deflection meets L/240 live and L/180 total load.

The overall height of this truss excluding overhang is 5-10-3.

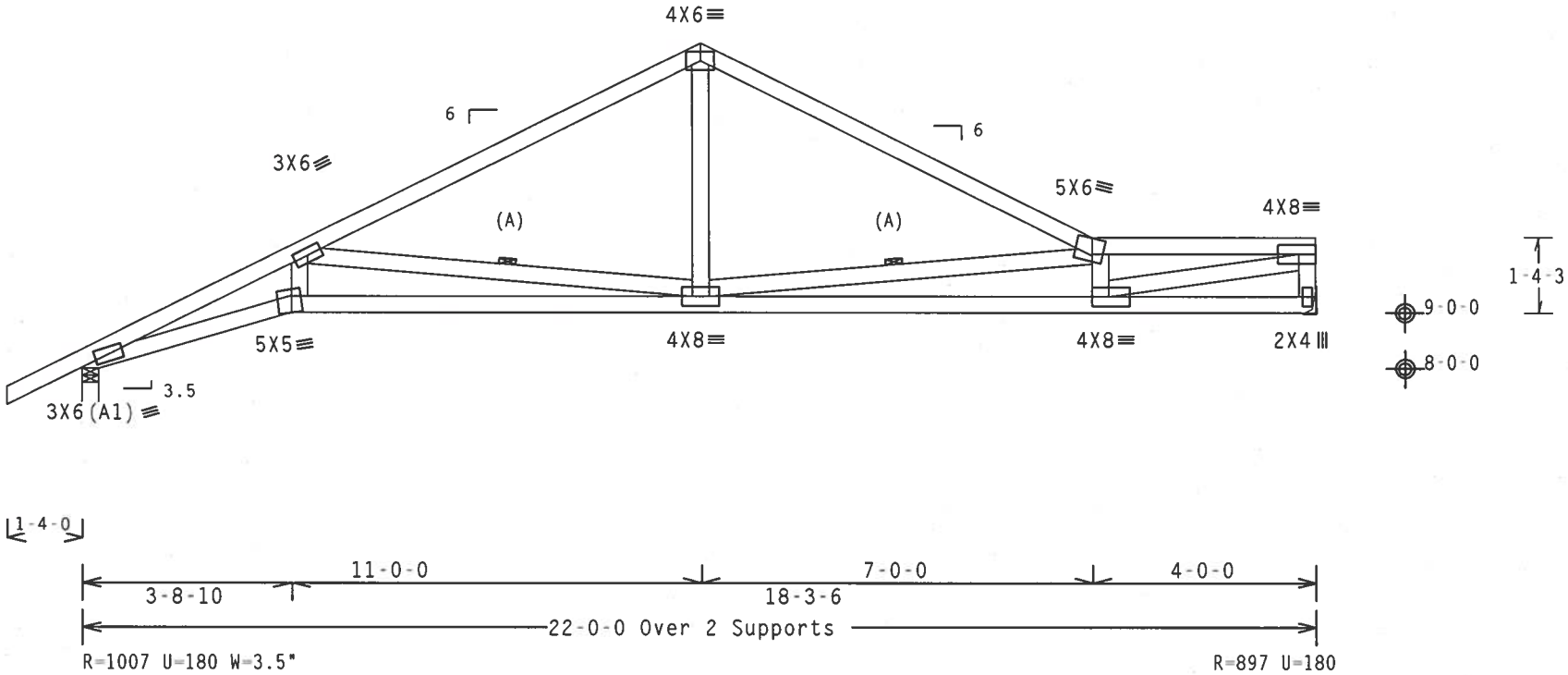

Design Crit: TPI-2002(STD)/FBC

PLT TYP. Wave Cq/RT=1.00(1.25)/10(0) 7.25.0503 QTY:1 FL/-/5/-/-/R/- Scale =.3125"/Ft.

ALPINE
ITW Building Components Group, Inc.
Haines City, FL 33844
FL Certificate of Authorization # 567

WARNING TRUSSES REQUIRE EXTREME CARE IN FABRICATION, HANDLING, SHIPPING, INSTALLING AND BRACING. REFER TO BCSI (BUILDING COMPONENT SAFETY INFORMATION), PUBLISHED BY TPI (TRUSS PLATE INSTITUTE, 218 NORTH LEE STREET, SUITE 312, ALEXANDRIA, VA, 22314) AND WTCA (WOOD TRUSS COUNCIL OF AMERICA, 6300 ENTERPRISE LANE, MADISON, WI 53719) FOR SAFETY PRACTICES PRIOR TO PERFORMING THESE FUNCTIONS. UNLESS OTHERWISE INDICATED TOP CHORD SHALL HAVE PROPERLY ATTACHED STRUCTURAL PANELS AND BOTTOM CHORD SHALL HAVE A PROPERLY ATTACHED RIGID CEILING.

IMPORTANTFURNISH A COPY OF THIS DESIGN TO THE INSTALLATION CONTRACTOR. ITW BCG, INC. SHALL NOT BE RESPONSIBLE FOR ANY DEVIATION FROM THIS DESIGN; ANY FAILURE TO BUILD THE TRUSS IN CONFORMANCE WITH TPI; OR FABRICATING, HANDLING, SHIPPING, INSTALLING & BRACING OF TRUSSES.
DESIGN CONFORMS WITH APPLICABLE PROVISIONS OF NDS (NATIONAL DESIGN SPEC. BY AF&PA) AND TPI. ITW BCG CONNECTOR PLATES ARE MADE OF 20/18/16GA (W,H/SS/K) ASTM A653 GRADE 40/60 (W, K/H,SS) GALV. STEEL. APPLY PLATES TO EACH FACE OF TRUSS AND, UNLESS OTHERWISE LOCATED ON THIS DESIGN, POSITION PER DRAWINGS 160A-Z. ANY INSPECTION OF PLATES FOLLOWED BY (1) SHALL BE PER ANNEX A3 OF TPI1-2002 SEC.3. A SEAL ON THIS DRAWING INDICATES ACCEPTANCE OF PROFESSIONAL ENGINEERING RESPONSIBILITY SOLELY FOR THE TRUSS COMPONENT DESIGN SHOWN. THE SUITABILITY AND USE OF THIS COMPONENT FOR ANY BUILDING IS THE RESPONSIBILITY OF THE BUILDING DESIGNER PER ANSI/TPI 1 SEC. 2.

JAMES F. COLLINS, JR. LICENSE No. 52212 STATE OF FLORIDA PROFESSIONAL ENGINEER
Apr 10 '07

TC LL	20.0 PSF	REF R215-- 70982
TC DL	10.0 PSF	DATE 04/10/07
BC DL	10.0 PSF	DRW HCUSR215 07100064
BC LL	0.0 PSF	HC-ENG DAB/AP
TOT.LD.	40.0 PSF	SEQN- 88488
DUR.FAC.	1.25	FROM LRB
SPACING	24.0"	JREF- 1T6E215_Z03

Top chord 2x4 SP #2 N
Bot chord 2x4 SP #2 Dense :B1 2x4 SP #2 N:
Webs 2x4 SP #2 N

Wind reactions based on MWFRS pressures.

In lieu of structural panels use purlins to brace all flat TC @ 24" OC.

The overall height of this truss excluding overhang is 5-10-3.

(**) plate(s) have been repositioned by the truss designer. Special positioning required.

110 mph wind, 15.00 ft mean hgt, ASCE 7-02, CLOSED bldg, not located within 4.50 ft from roof edge, CAT II, EXP B, wind TC DL=5.0 psf, wind BC DL=5.0 psf. Iw=1.00 GCpi(+/-)=0.18

Plates sized for a minimum of 3.00 sq.in./piece.

Deflection meets L/240 live and L/180 total load.

DM1 (1) 2x4X5-0-0 SP #2 Dense Bottom chord scab centered 19-6-0 from left end. Attach to one face of chord with (2) rows of 0.131"x3"_Gun_nails @ 6" O.C., staggered 3".

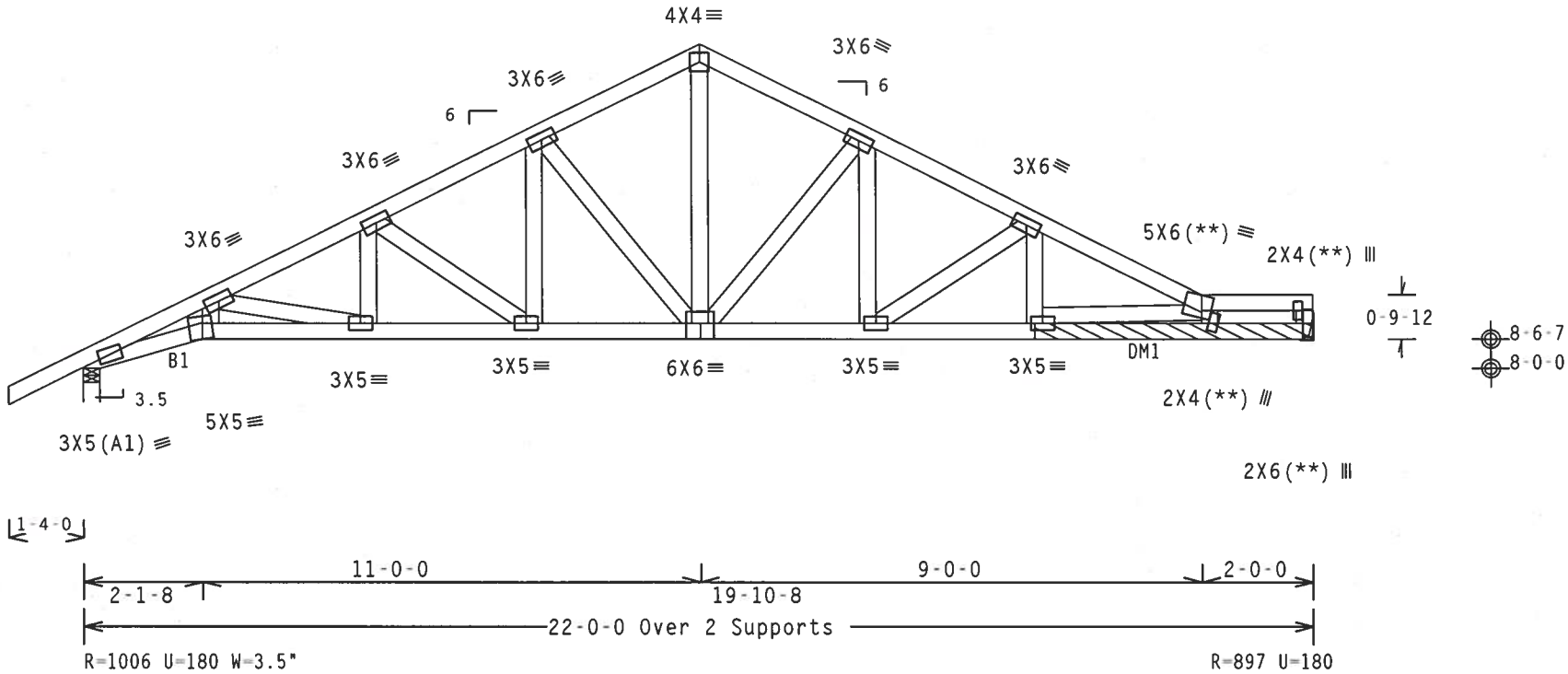

Design Crit: TPI-2002(STD)/FBC

PLT TYP. Wave Cq/RT=1.00(1.25)/10(0) 7.25.0503 QTY:1 FL/-/5/-/-/R/- Scale =.3125"/Ft.

ALPINE
ITW Building Components Group, Inc.
Haines City, FL 33844
FL Certificate of Authorization # 567

WARNING TRUSSES REQUIRE EXTREME CARE IN FABRICATION, HANDLING, SHIPPING, INSTALLING AND BRACING. REFER TO BCSI (BUILDING COMPONENT SAFETY INFORMATION). PUBLISHED BY TPI (TRUSS PLATE INSTITUTE, 218 NORTH LEE STREET, SUITE 312, ALEXANDRIA, VA, 22314) AND WTCA (WOOD TRUSS COUNCIL OF AMERICA, 6300 ENTERPRISE LANE, MADISON, WI 53719) FOR SAFETY PRACTICES PRIOR TO PERFORMING THESE FUNCTIONS. UNLESS OTHERWISE INDICATED TOP CHORD SHALL HAVE PROPERLY ATTACHED STRUCTURAL PANELS AND BOTTOM CHORD SHALL HAVE A PROPERLY ATTACHED RIGID CEILING.

IMPORTANT FURNISH A COPY OF THIS DESIGN TO THE INSTALLATION CONTRACTOR. ITW BCG, INC. SHALL NOT BE RESPONSIBLE FOR ANY DEVIATION FROM THIS DESIGN; ANY FAILURE TO BUILD THE TRUSS IN COMFORMANCE WITH TPI; OR FABRICATING, HANDLING, SHIPPING, INSTALLING & BRACING OF TRUSSES. DESIGN CONFORMS WITH APPLICABLE PROVISIONS OF NDS (NATIONAL DESIGN SPEC. BY AF&PA) AND TPI. ITW BCG CONNECTOR PLATES ARE MADE OF 20/18/16GA (W.H/SS/K) ASTM A653 GRADE 40/60 (W. K/H.SS) GALV. STEEL. APPLY PLATES TO EACH FACE OF TRUSS AND, UNLESS OTHERWISE LOCATED ON THIS DESIGN, POSITION PER DRAWINGS 160A-Z. ANY INSPECTION OF PLATES FOLLOWED BY (1) SHALL BE PER ANNEX A3 OF TPI1-2002 SEC.3. A SEAL ON THIS DRAWING INDICATES ACCEPTANCE OF PROFESSIONAL ENGINEERING RESPONSIBILITY SOLELY FOR THE TRUSS COMPONENT DESIGN SHOWN. THE SUITABILITY AND USE OF THIS COMPONENT FOR ANY BUILDING IS THE RESPONSIBILITY OF THE BUILDING DESIGNER PER ANSI/TPI 1 SEC. 2.

JAMES F. COLLINS, JR. LICENSE No 52212 STATE OF FLORIDA PROFESSIONAL ENGINEER

Apr 10 '07

TC LL	20.0 PSF	REF	R215-- 70983
TC DL	10.0 PSF	DATE	04/10/07
BC DL	10.0 PSF	DRW	HCUSR215 07100063
BC LL	0.0 PSF	HC-ENG	DAB/AP
TOT.LD.	40.0 PSF	SEQN-	88627 REV
DUR.FAC.	1.25	FROM	LRB
SPACING	24.0"	JREF-	1T6E215_Z03

THIS DWG PREPARED FROM COMPUTER INPUT (LOADS & DIMENSIONS) SUBMITTED BY TRUSS MFR.

Top chord 2x4 SP #2 N
Bot chord 2x4 SP #2 N
Webs 2x4 SP #2 N

Wind reactions based on MWFRS pressures.

Plates sized for a minimum of 3.00 sq.in./piece.

110 mph wind, 15.00 ft mean hgt, ASCE 7-02, CLOSED bldg, not located within 4.50 ft from roof edge, CAT II, EXP B, wind TC DL=5.0 psf, wind BC DL=5.0 psf. Iw=1.00 GCpi(+/-)=0.18

Deflection meets L/240 live and L/180 total load.

The overall height of this truss excluding overhang is 5-10-3.

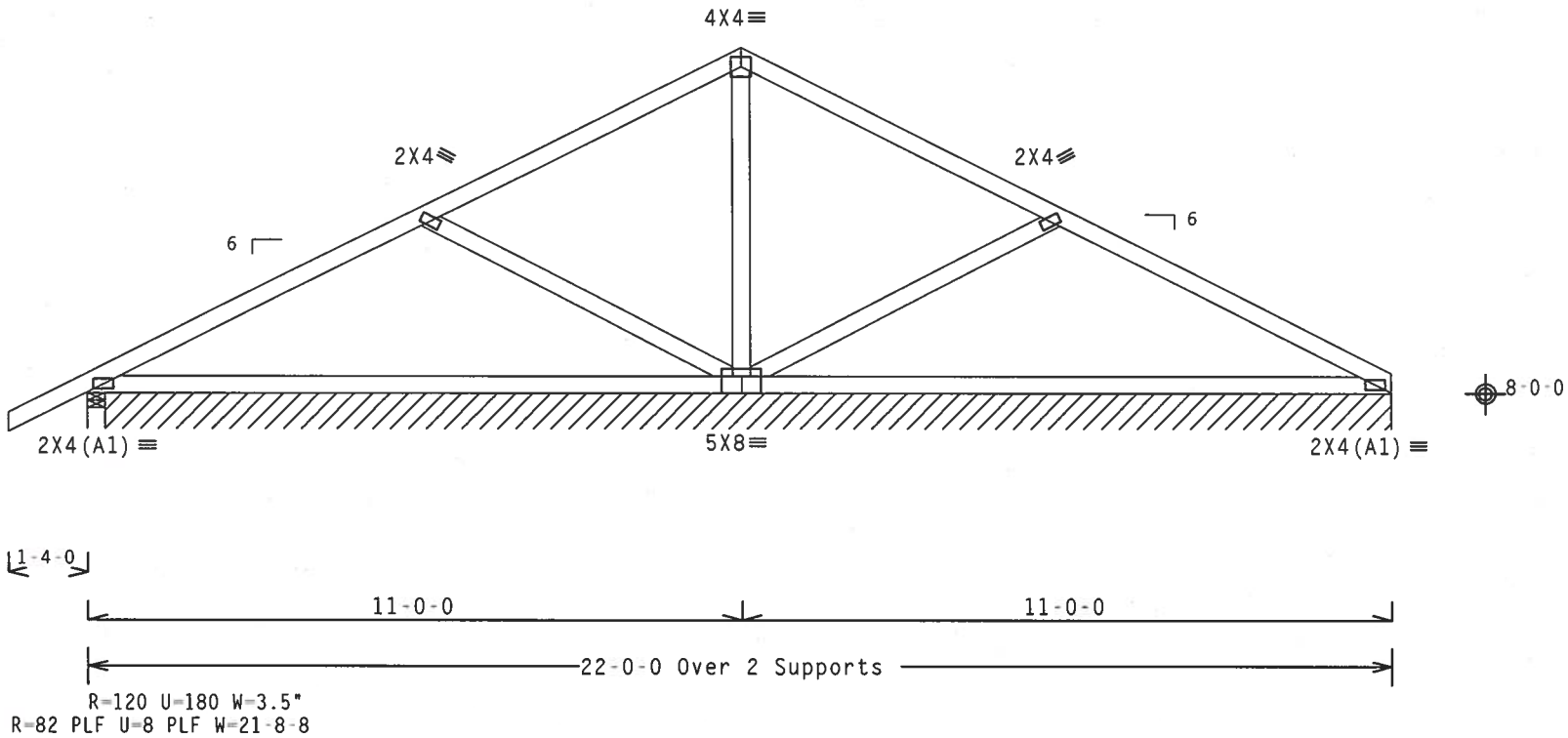

Design Crit: TPI-2002(STD)/FBC

PLT TYP. Wave Cq/RT=1.00(1.25)/10(0) 7.25.0503 QTY:1 FL/-/5/-/-/R/- Scale =.3125"/Ft.

ALPINE
ITW Building Components Group, Inc.
Haines City, FL 33844
FL Certificate of Authorization # 567

WARNING TRUSSES REQUIRE EXTREME CARE IN FABRICATION, HANDLING, SHIPPING, INSTALLING AND BRACING. REFER TO BCSI (BUILDING COMPONENT SAFETY INFORMATION), PUBLISHED BY TPI (TRUSS PLATE INSTITUTE, 218 NORTH LEE STREET, SUITE 312, ALEXANDRIA, VA, 22314) AND WTCA (WOOD TRUSS COUNCIL OF AMERICA, 6300 ENTERPRISE LANE, MADISON, WI 53719) FOR SAFETY PRACTICES PRIOR TO PERFORMING THESE FUNCTIONS. UNLESS OTHERWISE INDICATED TOP CHORD SHALL HAVE PROPERLY ATTACHED STRUCTURAL PANELS AND BOTTOM CHORD SHALL HAVE A PROPERLY ATTACHED RIGID CEILING.

IMPORTANTFURNISH A COPY OF THIS DESIGN TO THE INSTALLATION CONTRACTOR. ITW BCG, INC. SHALL NOT BE RESPONSIBLE FOR ANY DEVIATION FROM THIS DESIGN; ANY FAILURE TO BUILD THE TRUSS IN CONFORMANCE WITH TPI; OR FABRICATING, HANDLING, SHIPPING, INSTALLING & BRACING OF TRUSSES. DESIGN CONFORMS WITH APPLICABLE PROVISIONS OF NDS (NATIONAL DESIGN SPEC. BY AF&PA) AND TPI. ITW BCG CONNECTOR PLATES ARE MADE OF 20/18/16GA (W,H/SS/K) ASTM A653 GRADE 40/60 (W, K/H,SS) GALV. STEEL. APPLY PLATES TO EACH FACE OF TRUSS AND, UNLESS OTHERWISE LOCATED ON THIS DESIGN, POSITION PER DRAWINGS 160A-Z. ANY INSPECTION OF PLATES FOLLOWED BY (1) SHALL BE PER ANNEX A3 OF TPI1-2002 SEC.3. A SEAL ON THIS DRAWING INDICATES ACCEPTANCE OF PROFESSIONAL ENGINEERING RESPONSIBILITY SOLELY FOR THE TRUSS COMPONENT DESIGN SHOWN. THE SUITABILITY AND USE OF THIS COMPONENT FOR ANY BUILDING IS THE RESPONSIBILITY OF THE BUILDING DESIGNER PER ANSI/TPI 1 SEC. 2.

JAMES F. COLLINS JR. LICENSE No. 52212 STATE OF FLORIDA PROFESSIONAL ENGINEER
Apr 10 07

TC LL	20.0 PSF	REF	R215-- 70984
TC DL	10.0 PSF	DATE	04/10/07
BC DL	10.0 PSF	DRW	HCUSR215 07100062
BC LL	0.0 PSF	HC-ENG	DAB/AP
TOT.LD.	40.0 PSF	SEQN-	88393
DUR.FAC.	1.25	FROM	LRB
SPACING	24.0"	JREF-	1T6E215_Z03

(4490-/LOT 20 COLUMBIA HOMESITES /Compass Builders -- , ** - A20)

Top chord 2x4 SP #2 N
Bot chord 2x4 SP #2 N

Wind reactions based on MWFRS pressures.

Plates sized for a minimum of 3.00 sq.in./piece.

110 mph wind, 15.00 ft mean hgt, ASCE 7-02, CLOSED bldg, not located within 4.50 ft from roof edge, CAT II, EXP B, wind TC DL=5.0 psf, wind BC DL=5.0 psf. Iw=1.00 GCpi(+/-)=0.18

Deflection meets L/240 live and L/180 total load.

The overall height of this truss excluding overhang is 1-11-3.

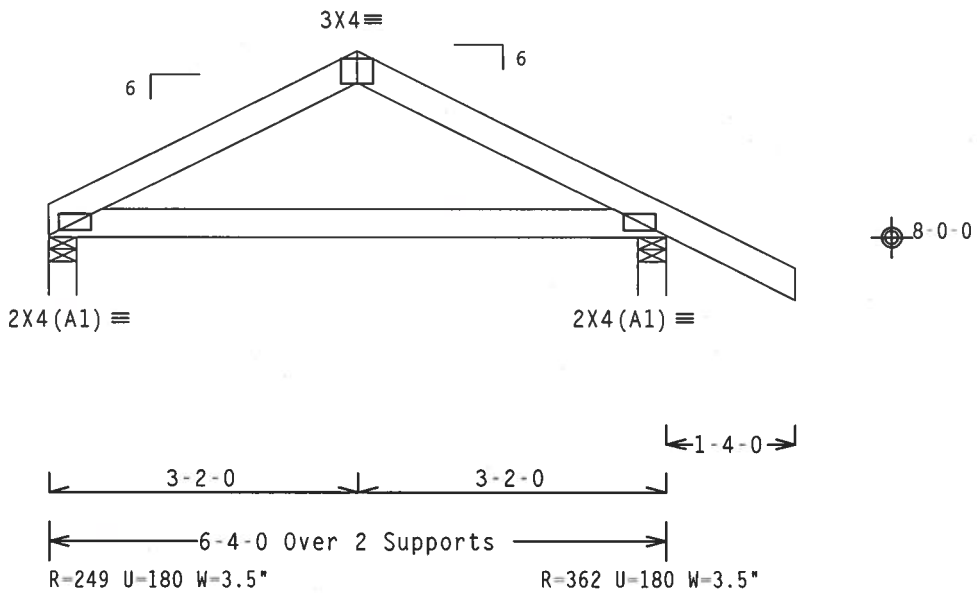

Design Crit: TPI-2002(STD)/FBC

PLT TYP. Wave Cq/RT=1.00(1.25)/10(0) 7.25.0503.00 QTY:1 FL/-/5/-/-/R/- Scale =.5"/Ft.

ALPINE
ITW Building Components Group, Inc.
Haines City, FL 33844
FL Certificate of Authorization # 567

WARNING TRUSSES REQUIRE EXTREME CARE IN FABRICATION, HANDLING, SHIPPING, INSTALLING AND BRACING. REFER TO BCSI (BUILDING COMPONENT SAFETY INFORMATION), PUBLISHED BY TPI (TRUSS PLATE INSTITUTE, 218 NORTH LEE STREET, SUITE 312, ALEXANDRIA, VA, 22314) AND WTCA (WOOD TRUSS COUNCIL OF AMERICA, 6300 ENTERPRISE LANE, MADISON, WI 53719) FOR SAFETY PRACTICES PRIOR TO PERFORMING THESE FUNCTIONS. UNLESS OTHERWISE INDICATED TOP CHORD SHALL HAVE PROPERLY ATTACHED STRUCTURAL PANELS AND BOTTOM CHORD SHALL HAVE A PROPERLY ATTACHED RIGID CEILING.

IMPORTANT FURNISH A COPY OF THIS DESIGN TO THE INSTALLATION CONTRACTOR. ITW BCG, INC. SHALL NOT BE RESPONSIBLE FOR ANY DEVIATION FROM THIS DESIGN; ANY FAILURE TO BUILD THE TRUSS IN CONFORMANCE WITH TPI; OR FABRICATING, HANDLING, SHIPPING, INSTALLING & BRACING OF TRUSSES. DESIGN CONFORMS WITH APPLICABLE PROVISIONS OF NDS (NATIONAL DESIGN SPEC. BY AF&PA) AND TPI. ITW BCG CONNECTOR PLATES ARE MADE OF 20/18/16GA (W,H/SS/K) ASTM A653 GRADE 40/60 (W, K/H,SS) GALV. STEEL. APPLY PLATES TO EACH FACE OF TRUSS AND, UNLESS OTHERWISE LOCATED ON THIS DESIGN, POSITION PER DRAWINGS 160A-Z. ANY INSPECTION OF PLATES FOLLOWED BY (I) SHALL BE PER ANNEX A3 OF TPI1-2002 SEC.3. A SEAL ON THIS DRAWING INDICATES ACCEPTANCE OF PROFESSIONAL ENGINEERING RESPONSIBILITY SOLELY FOR THE TRUSS COMPONENT DESIGN SHOWN. THE SUITABILITY AND USE OF THIS COMPONENT FOR ANY BUILDING IS THE RESPONSIBILITY OF THE BUILDING DESIGNER PER ANSI/TPI 1 SEC. 2.

JAMES F. COLLINS, JR. LICENSE No. 52212 STATE OF FLORIDA PROFESSIONAL ENGINEER
Apr 10 07

TC LL	20.0 PSF	REF	R215-- 70985
TC DL	10.0 PSF	DATE	04/10/07
BC DL	10.0 PSF	DRW	HCUSR215 07100067
BC LL	0.0 PSF	HC-ENG	DAB/AP
TOT.LD.	40.0 PSF	SEQN-	88444
DUR.FAC.	1.25	FROM	LRB
SPACING	24.0"	JREF-	1T6E215_Z03

(4490-/LOT 20 COLUMBIA HOMESITES /Compass Builders -- , ** - A21)

Top chord 2x4 SP #2 N
Bot chord 2x4 SP #2 N

Wind reactions based on MWFRS pressures.

Plates sized for a minimum of 3.00 sq.in./piece.

110 mph wind, 15.00 ft mean hgt, ASCE 7-02, CLOSED bldg, Located anywhere in roof, CAT II, EXP B, wind TC DL=5.0 psf, wind BC DL=5.0 psf. Iw=1.00 GCpi(+/-)=0.18

Deflection meets L/240 live and L/180 total load.

The overall height of this truss excluding overhang is 1-11-3.

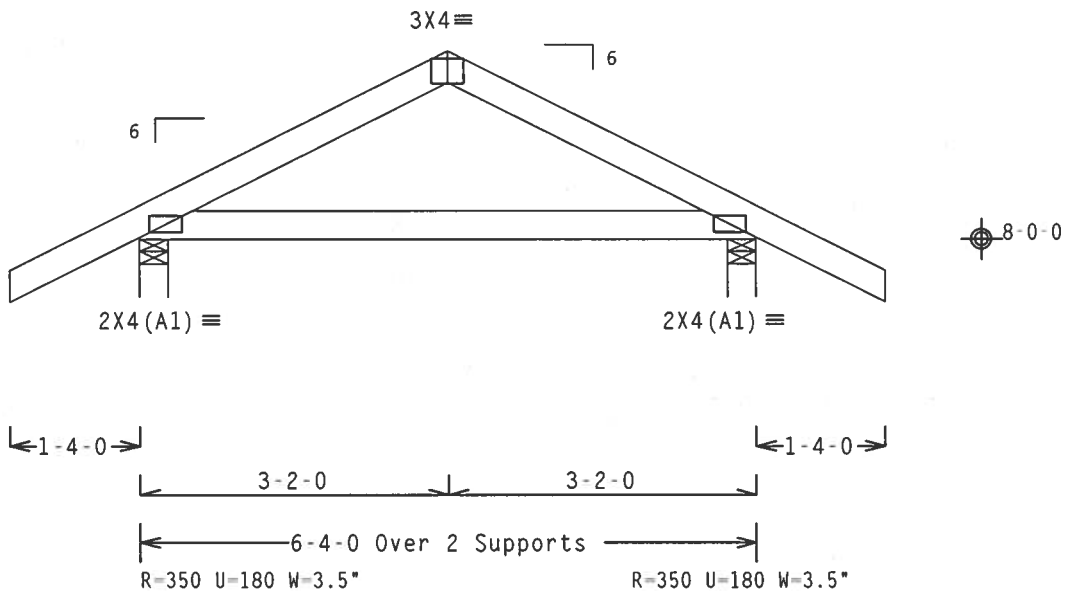

Design Crit: TPI-2002(STD)/FBC

PLT TYP. Wave Cq/RT=1.00(1.25)/10(0) 7.25.0503.00 QTY:1 FL/-/5/-/-/R/- Scale =.5"/Ft.

ALPINE
ITW Building Components Group, Inc.
Haines City, FL 33844
FL Certificate of Authorization # 567

WARNING TRUSSES REQUIRE EXTREME CARE IN FABRICATION, HANDLING, SHIPPING, INSTALLING AND BRACING. REFER TO BCSI (BUILDING COMPONENT SAFETY INFORMATION), PUBLISHED BY TPI (TRUSS PLATE INSTITUTE, 218 NORTH LEE STREET, SUITE 312, ALEXANDRIA, VA, 22314) AND WTCA (WOOD TRUSS COUNCIL OF AMERICA, 6300 ENTERPRISE LANE, MADISON, WI 53719) FOR SAFETY PRACTICES PRIOR TO PERFORMING THESE FUNCTIONS. UNLESS OTHERWISE INDICATED TOP CHORD SHALL HAVE PROPERLY ATTACHED STRUCTURAL PANELS AND BOTTOM CHORD SHALL HAVE A PROPERLY ATTACHED RIGID CEILING.

IMPORTANTFURNISH A COPY OF THIS DESIGN TO THE INSTALLATION CONTRACTOR. ITW BCG, INC. SHALL NOT BE RESPONSIBLE FOR ANY DEVIATION FROM THIS DESIGN; ANY FAILURE TO BUILD THE TRUSS IN CONFORMANCE WITH TPI; OR FABRICATING, HANDLING, SHIPPING, INSTALLING & BRACING OF TRUSSES. DESIGN CONFORMS WITH APPLICABLE PROVISIONS OF NDS (NATIONAL DESIGN SPEC. BY AF&PA) AND TPI. ITW BCG CONNECTOR PLATES ARE MADE OF 20/18/16GA (W,H/SS/K) ASTM A653 GRADE 40/60 (W, K/H,SS) GALV. STEEL. APPLY PLATES TO EACH FACE OF TRUSS AND, UNLESS OTHERWISE LOCATED ON THIS DESIGN, POSITION PER DRAWINGS 160A-Z. ANY INSPECTION OF PLATES FOLLOWED BY (1) SHALL BE PER ANNEX A3 OF TPI1-2002 SEC.3. A SEAL ON THIS DRAWING INDICATES ACCEPTANCE OF PROFESSIONAL ENGINEERING RESPONSIBILITY SOLELY FOR THE TRUSS COMPONENT DESIGN SHOWN. THE SUITABILITY AND USE OF THIS COMPONENT FOR ANY BUILDING IS THE RESPONSIBILITY OF THE BUILDING DESIGNER PER ANSI/TPI 1 SEC. 2.

JAMES F. COLLINS, JR. LICENSE No. 52212 STATE OF FLORIDA PROFESSIONAL ENGINEER
Apr 10 '07

TC LL	20.0 PSF	REF R215-- 70986
TC DL	10.0 PSF	DATE 04/10/07
BC DL	10.0 PSF	DRW HCUSR215 07100066
BC LL	0.0 PSF	HC-ENG DAB/AP
TOT.LD.	40.0 PSF	SEQN- 88446
DUR.FAC.	1.25	FROM LRB
SPACING	24.0"	JREF- 1T6E215_Z03

Top chord 2x4 SP #2 N
Bot chord 2x4 SP #2 N

Wind reactions based on MWFRS pressures.

Plates sized for a minimum of 3.00 sq.in./piece.

110 mph wind, 15.00 ft mean hgt, ASCE 7-02, CLOSED bldg, Located anywhere in roof, CAT II, EXP B, wind TC DL=5.0 psf, wind BC DL=5.0 psf. Iw=1.00 GCpi(+/-)=0.18

Deflection meets L/240 live and L/180 total load.

The overall height of this truss excluding overhang is 0-10-3.

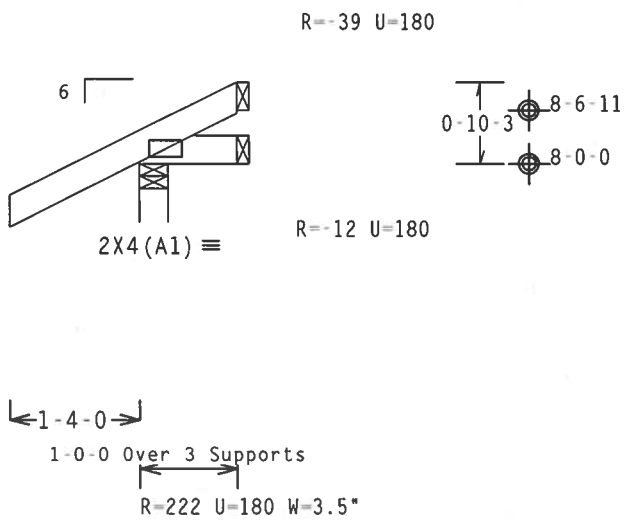

Design Crit: TPI-2002(STD)/FBC

PLT TYP. Wave Cq/RT=1.00(1.25)/10(0) 7.25.0503.00 QTY:8 FL/-/5/-/-/R/- Scale =.5"/Ft.

ALPINE
ITW Building Components Group, Inc.
Haines City, FL 33844
FL Certificate of Authorization # 567

WARNING TRUSSES REQUIRE EXTREME CARE IN FABRICATION, HANDLING, SHIPPING, INSTALLING AND BRACING. REFER TO BCSI (BUILDING COMPONENT SAFETY INFORMATION), PUBLISHED BY TPI (TRUSS PLATE INSTITUTE, 218 NORTH LEE STREET, SUITE 312, ALEXANDRIA, VA, 22314) AND WTCA (WOOD TRUSS COUNCIL OF AMERICA, 6300 ENTERPRISE LANE, MADISON, WI 53719) FOR SAFETY PRACTICES PRIOR TO PERFORMING THESE FUNCTIONS. UNLESS OTHERWISE INDICATED TOP CHORD SHALL HAVE PROPERLY ATTACHED STRUCTURAL PANELS AND BOTTOM CHORD SHALL HAVE A PROPERLY ATTACHED RIGID CEILING.

IMPORTANTFURNISH A COPY OF THIS DESIGN TO THE INSTALLATION CONTRACTOR. ITW BCG, INC. SHALL NOT BE RESPONSIBLE FOR ANY DEVIATION FROM THIS DESIGN; ANY FAILURE TO BUILD THE TRUSS IN CONFORMANCE WITH TPI; OR FABRICATING, HANDLING, SHIPPING, INSTALLING & BRACING OF TRUSSES. DESIGN CONFORMS WITH APPLICABLE PROVISIONS OF NDS (NATIONAL DESIGN SPEC. BY AF&PA) AND TPI. ITW BCG CONNECTOR PLATES ARE MADE OF 20/18/16GA (W,H/SS/K) ASTM A653 GRADE 40/60 (W, K/H,SS) GALV. STEEL. APPLY PLATES TO EACH FACE OF TRUSS AND, UNLESS OTHERWISE LOCATED ON THIS DESIGN, POSITION PER DRAWINGS 160A-Z. ANY INSPECTION OF PLATES FOLLOWED BY (1) SHALL BE PER ANNEX A3 OF TPI1-2002 SEC.3. A SEAL ON THIS DRAWING INDICATES ACCEPTANCE OF PROFESSIONAL ENGINEERING RESPONSIBILITY SOLELY FOR THE TRUSS COMPONENT DESIGN SHOWN. THE SUITABILITY AND USE OF THIS COMPONENT FOR ANY BUILDING IS THE RESPONSIBILITY OF THE BUILDING DESIGNER PER ANSI/TPI 1 SEC. 2.

JAMES F. COLLINS LICENSED No. 52212 STATE OF FLORIDA PROFESSIONAL ENGINEER

Apr 10, 2007

TC LL	20.0 PSF	REF R215-- 70987
TC DL	10.0 PSF	DATE 04/10/07
BC DL	10.0 PSF	DRW HCUSR215 07100073
BC LL	0.0 PSF	HC-ENG DAB/AP
TOT.LD.	40.0 PSF	SEQN- 88400
DUR.FAC.	1.25	FROM LRB
SPACING	24.0"	JREF- 1T6E215_Z03

THIS DWG PREPARED FROM COMPUTER INPUT (LOADS & DIMENSIONS) SUBMITTED BY TRUSS MFR.

Top chord 2x4 SP #2 N
Bot chord 2x4 SP #2 N

Wind reactions based on MWFRS pressures.

Plates sized for a minimum of 3.00 sq.in./piece.

110 mph wind, 15.00 ft mean hgt, ASCE 7-02, CLOSED bldg, Located anywhere in roof, CAT II, EXP B, wind TC DL=5.0 psf, wind BC DL=5.0 psf. Iw=1.00 GCpi(+/-)=0.18

Deflection meets L/240 live and L/180 total load.

The overall height of this truss excluding overhang is 1-10-3.

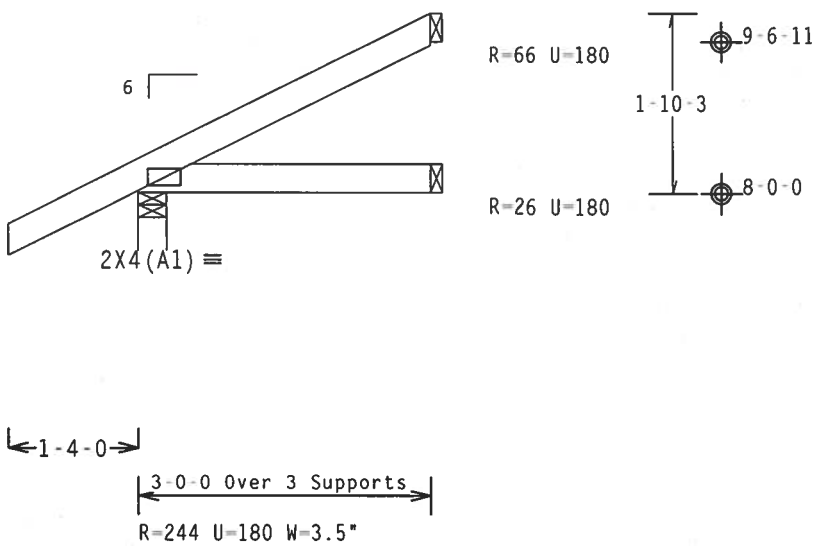

Design Crit: TPI-2002(STD)/FBC
Cg/RT=1.00(1.25)/10(0) 7.25.0502.23

PLT TYP. Wave QTY:6 FL/-/5/-/-/R/- Scale =.5"/Ft.

ALPINE
ITW Building Components Group, Inc.
Haines City, FL 33844
FL Certificate of Authorization # 567

WARNING TRUSSES REQUIRE EXTREME CARE IN FABRICATION, HANDLING, SHIPPING, INSTALLING AND BRACING. REFER TO BCSI (BUILDING COMPONENT SAFETY INFORMATION), PUBLISHED BY TPI (TRUSS PLATE INSTITUTE, 218 NORTH LEE STREET, SUITE 312, ALEXANDRIA, VA, 22314) AND WTCA (WOOD TRUSS COUNCIL OF AMERICA, 6300 ENTERPRISE LANE, MADISON, WI 53719) FOR SAFETY PRACTICES PRIOR TO PERFORMING THESE FUNCTIONS. UNLESS OTHERWISE INDICATED TOP CHORD SHALL HAVE PROPERLY ATTACHED STRUCTURAL PANELS AND BOTTOM CHORD SHALL HAVE A PROPERLY ATTACHED RIGID CEILING.

IMPORTANTFURNISH A COPY OF THIS DESIGN TO THE INSTALLATION CONTRACTOR. ITW BCG, INC. SHALL NOT BE RESPONSIBLE FOR ANY DEVIATION FROM THIS DESIGN; ANY FAILURE TO BUILD THE TRUSS IN CONFORMANCE WITH TPI; OR FABRICATING, HANDLING, SHIPPING, INSTALLING & BRACING OF TRUSSES. DESIGN CONFORMS WITH APPLICABLE PROVISIONS OF NDS (NATIONAL DESIGN SPEC. BY AF&PA) AND TPI. ITW BCG CONNECTOR PLATES ARE MADE OF 20/18/16GA (W,H/SS/K) ASTM A653 GRADE 40/60 (W, K/H,SS) GALV. STEEL. APPLY PLATES TO EACH FACE OF TRUSS AND, UNLESS OTHERWISE LOCATED ON THIS DESIGN, POSITION PER DRAWINGS 160A-Z. ANY INSPECTION OF PLATES FOLLOWED BY (1) SHALL BE PER ANNEX A3 OF TPI1-2002 SEC.3. A SEAL ON THIS DRAWING INDICATES ACCEPTANCE OF PROFESSIONAL ENGINEERING RESPONSIBILITY SOLELY FOR THE TRUSS COMPONENT DESIGN SHOWN. THE SUITABILITY AND USE OF THIS COMPONENT FOR ANY BUILDING IS THE RESPONSIBILITY OF THE BUILDING DESIGNER PER ANSI/TPI 1 SEC. 2.

JAMES F. COLLINS, JR. LICENSE No. 52212 STATE OF FLORIDA PROFESSIONAL ENGINEER
Apr 10,

TC LL	20.0 PSF	REF	R215-- 70988
TC DL	10.0 PSF	DATE	04/10/07
BC DL	10.0 PSF	DRW	HCUSR215 07100002
BC LL	0.0 PSF	HC-ENG	WHK/WHK *
TOT.LD.	40.0 PSF	SEQN-	37037
DUR.FAC.	1.25	FROM	LRB
SPACING	24.0"	JREF-	1T6E215_Z03

THIS DAB PREPARED FROM COMPUTER INPUT (LOADS & DIMENSIONS) SUBMITTED BY TRUSS MFR.

Top chord 2x4 SP #2 N
Bot chord 2x4 SP #2 N

Wind reactions based on MWFRS pressures.

Plates sized for a minimum of 3.00 sq.in./piece.

110 mph wind, 15.00 ft mean hgt, ASCE 7-02, CLOSED bldg, not located within 4.50 ft from roof edge, CAT II, EXP B, wind TC DL=5.0 psf, wind BC DL=5.0 psf. Iw=1.00 GCpi(+/-)=0.18

Deflection meets L/240 live and L/180 total load.

The overall height of this truss excluding overhang is 2-10-3.

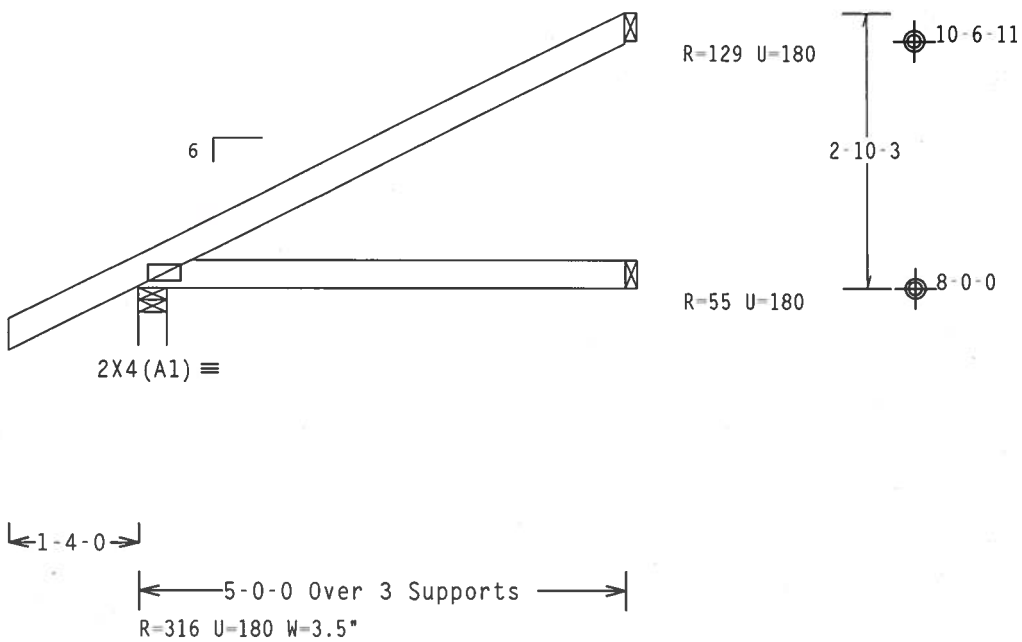

Design Crit: TPI-2002(STD)/FBC
Cq/RT=1.00(1.25)/10(0) 7.25.0503.00

PLT TYP. Wave

QTY:6 FL/-/5/-/-/R/-

Scale =.5"/Ft.

ALPINE
ITW Building Components Group, Inc.
Haines City, FL 33844
FL Certificate of Authorization # 567

WARNING TRUSSES REQUIRE EXTREME CARE IN FABRICATION, HANDLING, SHIPPING, INSTALLING AND BRACING. REFER TO BCSI (BUILDING COMPONENT SAFETY INFORMATION), PUBLISHED BY TPI (TRUSS PLATE INSTITUTE, 218 NORTH LEE STREET, SUITE 312, ALEXANDRIA, VA, 22314) AND WTCA (WOOD TRUSS COUNCIL OF AMERICA, 6300 ENTERPRISE LANE, MADISON, WI 53719) FOR SAFETY PRACTICES PRIOR TO PERFORMING THESE FUNCTIONS. UNLESS OTHERWISE INDICATED TOP CHORD SHALL HAVE PROPERLY ATTACHED STRUCTURAL PANELS AND BOTTOM CHORD SHALL HAVE A PROPERLY ATTACHED RIGID CEILING.

IMPORTANTFURNISH A COPY OF THIS DESIGN TO THE INSTALLATION CONTRACTOR. ITW BCG, INC. SHALL NOT BE RESPONSIBLE FOR ANY DEVIATION FROM THIS DESIGN; ANY FAILURE TO BUILD THE TRUSS IN CONFORMANCE WITH TPI; OR FABRICATING, HANDLING, SHIPPING, INSTALLING & BRACING OF TRUSSES.
DESIGN CONFORMS WITH APPLICABLE PROVISIONS OF NDS (NATIONAL DESIGN SPEC. BY AF&PA) AND TPI. ITW BCG CONNECTOR PLATES ARE MADE OF 20/18/16GA (W,H/SS/K) ASTM A653 GRADE 40/60 (W, K/H,SS) GALV. STEEL. APPLY PLATES TO EACH FACE OF TRUSS AND, UNLESS OTHERWISE LOCATED ON THIS DESIGN, POSITION PER DRAWINGS 160A-Z. ANY INSPECTION OF PLATES FOLLOWED BY (I) SHALL BE PER ANNEX A3 OF TPI1-2002 SEC.3. A SEAL ON THIS DRAWING INDICATES ACCEPTANCE OF PROFESSIONAL ENGINEERING RESPONSIBILITY SOLELY FOR THE TRUSS COMPONENT DESIGN SHOWN. THE SUITABILITY AND USE OF THIS COMPONENT FOR ANY BUILDING IS THE RESPONSIBILITY OF THE BUILDING DESIGNER PER ANSI/TPI 1 SEC. 2.

JAMES F. COLLINS, JR. LICENSE No. 52212 STATE OF FLORIDA PROFESSIONAL ENGINEER

Apr 10, 2007

TC LL	20.0 PSF	REF	R215-- 70989
TC DL	10.0 PSF	DATE	04/10/07
BC DL	10.0 PSF	DRW	HCUSR215 07100072
BC LL	0.0 PSF	HC-ENG	DAB/AP *
TOT.LD.	40.0 PSF	SEQN-	88398
DUR.FAC.	1.25	FROM	LRB
SPACING	24.0"	JREF-	1T6E215_Z03

THIS DAT PREPARED FROM COMPUTER INPUT (LOADS & DIMENSIONS) SUBMITTED BY TRUSS MFR.

Top chord 2x4 SP #2 N
Bot chord 2x4 SP #2 N

Wind reactions based on MWFRS pressures.

Plates sized for a minimum of 3.00 sq.in./piece.

The overall height of this truss excluding overhang is 0-10-3.

110 mph wind, 15.00 ft mean hgt, ASCE 7-02, CLOSED bldg, Located anywhere in roof, CAT II, EXP B, wind TC DL=5.0 psf, wind BC DL=5.0 psf. Iw=1.00 GCpi(+/-)=0.18

Deflection meets L/240 live and L/180 total load.

Shim all supports to solid bearing.

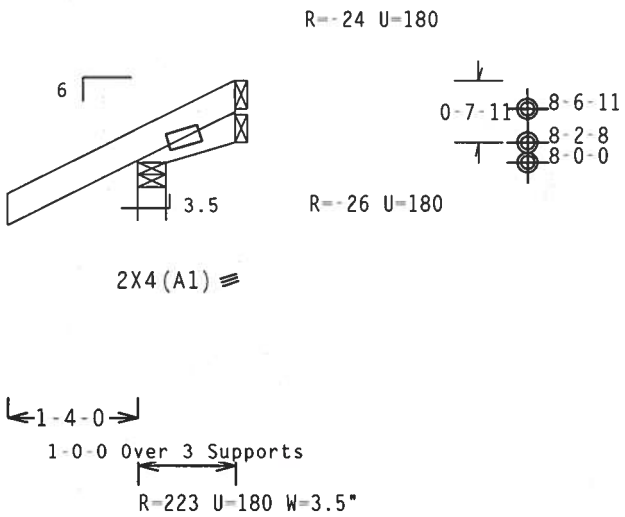

Design Crit: TPI-2002(STD)/FBC

PLT TYP. Wave Cq/RT=1.00(1.25)/10(0) 7.25.0503 [illegible] QTY:2 FL/-/5/-/-/R/- Scale =.5"/Ft.

ALPINE
ITW Building Components Group, Inc.
Haines City, FL 33844
FL Certificate of Authorization # 567

WARNING TRUSSES REQUIRE EXTREME CARE IN FABRICATION, HANDLING, SHIPPING, INSTALLING AND BRACING. REFER TO BCSI (BUILDING COMPONENT SAFETY INFORMATION), PUBLISHED BY TPI (TRUSS PLATE INSTITUTE, 218 NORTH LEE STREET, SUITE 312, ALEXANDRIA, VA. 22314) AND WTCA (WOOD TRUSS COUNCIL OF AMERICA, 6300 ENTERPRISE LANE, MADISON, WI 53719) FOR SAFETY PRACTICES PRIOR TO PERFORMING THESE FUNCTIONS. UNLESS OTHERWISE INDICATED TOP CHORD SHALL HAVE PROPERLY ATTACHED STRUCTURAL PANELS AND BOTTOM CHORD SHALL HAVE A PROPERLY ATTACHED RIGID CEILING.

IMPORTANT FURNISH A COPY OF THIS DESIGN TO THE INSTALLATION CONTRACTOR. ITW BCG, INC. SHALL NOT BE RESPONSIBLE FOR ANY DEVIATION FROM THIS DESIGN; ANY FAILURE TO BUILD THE TRUSS IN COMFORMANCE WITH TPI; OR FABRICATING, HANDLING, SHIPPING, INSTALLING & BRACING OF TRUSSES. DESIGN CONFORMS WITH APPLICABLE PROVISIONS OF NDS (NATIONAL DESIGN SPEC. BY AF&PA) AND TPI. ITW BCG CONNECTOR PLATES ARE MADE OF 20/18/16GA (W.H/SS/K) ASTM A653 GRADE 40/60 (W. K/H.SS) GALV. STEEL. APPLY PLATES TO EACH FACE OF TRUSS AND, UNLESS OTHERWISE LOCATED ON THIS DESIGN, POSITION PER DRAWINGS 160A-Z. ANY INSPECTION OF PLATES FOLLOWED BY (I) SHALL BE PER ANNEX A3 OF TPI1-2002 SEC.3. A SEAL ON THIS DRAWING INDICATES ACCEPTANCE OF PROFESSIONAL ENGINEERING RESPONSIBILITY SOLELY FOR THE TRUSS COMPONENT DESIGN SHOWN. THE SUITABILITY AND USE OF THIS COMPONENT FOR ANY BUILDING IS THE RESPONSIBILITY OF THE BUILDING DESIGNER PER ANSI/TPI 1 SEC. 2.

JAMES F. COLLINS, JR. LICENSE No. 52212 STATE OF FLORIDA PROFESSIONAL ENGINEER
Apr 10 07

TC LL	20.0 PSF	REF	R215-- 70990
TC DL	10.0 PSF	DATE	04/10/07
BC DL	10.0 PSF	DRW	HCUSR215 07100059
BC LL	0.0 PSF	HC-ENG	DAB/AP
TOT.LD.	40.0 PSF	SEQN-	88453
DUR.FAC.	1.25	FROM	LRB
SPACING	24.0"	JREF-	1T6E215_Z03

(4490-/LOT 20 COLUMBIA HOMESITES /Compass Builders -- , ** - JC3A)

Top chord 2x4 SP #2 N
Bot chord 2x4 SP #2 N
Webs 2x4 SP #2 N

Wind reactions based on MWFRS pressures.

Plates sized for a minimum of 3.00 sq.in./piece.

The overall height of this truss excluding overhang is 1-10-3.

110 mph wind, 15.00 ft mean hgt, ASCE 7-02, CLOSED bldg, Located anywhere in roof, CAT II, EXP B, wind TC DL=5.0 psf, wind BC DL=5.0 psf. Iw=1.00 GCpi(+/-)=0.18

Deflection meets L/240 live and L/180 total load.

Shim all supports to solid bearing.

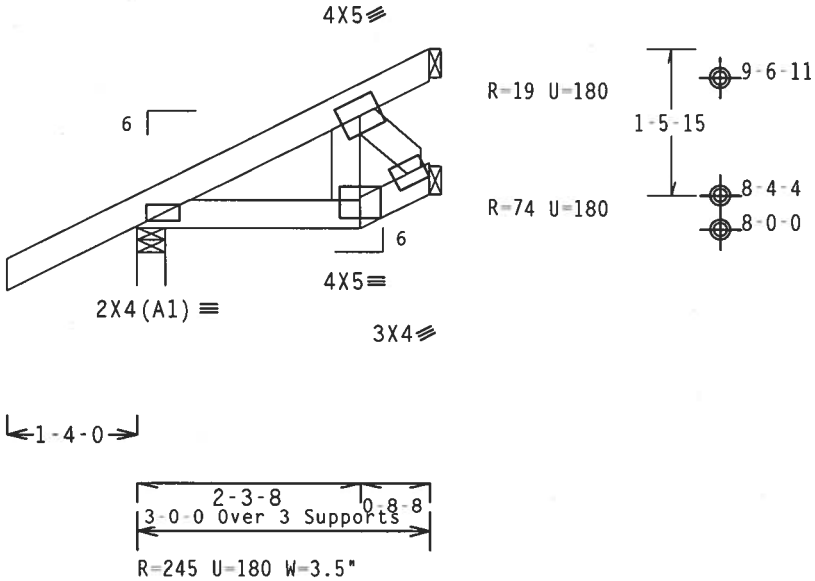

Design Crit: TPI-2002(STD)/FBC

PLT TYP. Wave Cq/RT=1.00(1.25)/10(0) 7.25.0503.09 QTY:2 FL/-/5/-/-/R/- Scale =.5"/Ft.

ALPINE
ITW Building Components Group, Inc.
Haines City, FL 33844
FL Certificate of Authorization # 567

WARNING TRUSSES REQUIRE EXTREME CARE IN FABRICATION, HANDLING, SHIPPING, INSTALLING AND BRACING. REFER TO BCSI (BUILDING COMPONENT SAFETY INFORMATION), PUBLISHED BY TPI (TRUSS PLATE INSTITUTE, 218 NORTH LEE STREET, SUITE 312, ALEXANDRIA, VA, 22314) AND WTCA (WOOD TRUSS COUNCIL OF AMERICA, 6300 ENTERPRISE LANE, MADISON, WI 53719) FOR SAFETY PRACTICES PRIOR TO PERFORMING THESE FUNCTIONS. UNLESS OTHERWISE INDICATED TOP CHORD SHALL HAVE PROPERLY ATTACHED STRUCTURAL PANELS AND BOTTOM CHORD SHALL HAVE A PROPERLY ATTACHED RIGID CEILING.

IMPORTANT FURNISH A COPY OF THIS DESIGN TO THE INSTALLATION CONTRACTOR. ITW BCG, INC. SHALL NOT BE RESPONSIBLE FOR ANY DEVIATION FROM THIS DESIGN; ANY FAILURE TO BUILD THE TRUSS IN COMFORMANCE WITH TPI; OR FABRICATING, HANDLING, SHIPPING, INSTALLING & BRACING OF TRUSSES. DESIGN CONFORMS WITH APPLICABLE PROVISIONS OF NDS (NATIONAL DESIGN SPEC. BY AF&PA) AND TPI. ITW BCG CONNECTOR PLATES ARE MADE OF 20/18/16GA (W,H/SS/K) ASTM A653 GRADE 40/60 (W, K/H,SS) GALV. STEEL. APPLY PLATES TO EACH FACE OF TRUSS AND, UNLESS OTHERWISE LOCATED ON THIS DESIGN, POSITION PER DRAWINGS 160A-Z. ANY INSPECTION OF PLATES FOLLOWED BY (1) SHALL BE PER ANNEX A3 OF TPI1-2002 SEC.3. A SEAL ON THIS DRAWING INDICATES ACCEPTANCE OF PROFESSIONAL ENGINEERING RESPONSIBILITY SOLELY FOR THE TRUSS COMPONENT DESIGN SHOWN. THE SUITABILITY AND USE OF THIS COMPONENT FOR ANY BUILDING IS THE RESPONSIBILITY OF THE BUILDING DESIGNER PER ANSI/TPI 1 SEC. 2.

JAMES F. COLLINS JR. LICENSE No. 52212 STATE OF FLORIDA PROFESSIONAL ENGINEER

Apr

TC LL	20.0 PSF	REF	R215-- 70991
TC DL	10.0 PSF	DATE	04/10/07
BC DL	10.0 PSF	DRW	HCUSR215 07100053
BC LL	0.0 PSF	HC-ENG	DAB/AP *
TOT.LD.	40.0 PSF	SEQN-	88427
DUR.FAC.	1.25	FROM	LRB
SPACING	24.0"	JREF-	1T6E215_Z03

(4490-/LOT 20 COLUMBIA HOMESITES /Compass Builders -- , ** - JC5A)

Top chord 2x4 SP #2 N
Bot chord 2x4 SP #2 N
Webs 2x4 SP #2 N

Wind reactions based on MWFRS pressures.

Plates sized for a minimum of 3.00 sq.in./piece.

110 mph wind, 15.00 ft mean hgt, ASCE 7-02, CLOSED bldg, not located within 4.50 ft from roof edge, CAT II, EXP B, wind TC DL=5.0 psf, wind BC DL=5.0 psf. Iw=1.00 GCpi(+/-)=0.18

Deflection meets L/240 live and L/180 total load.

The overall height of this truss excluding overhang is 2-10-3.

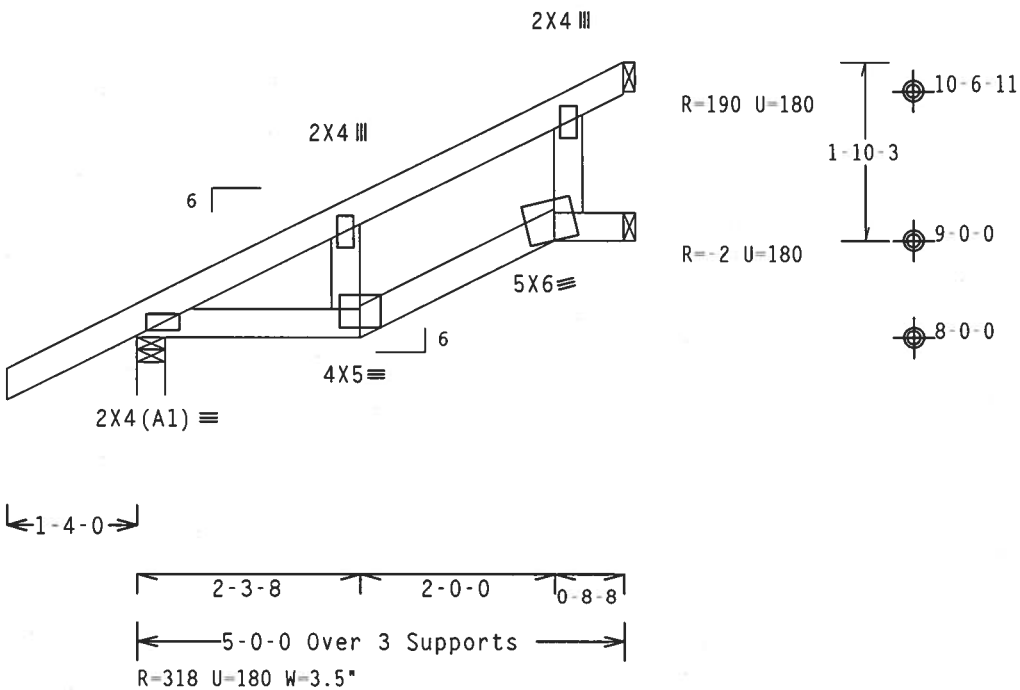

Design Crit: TPI-2002(STD)/FBC

PLT TYP. Wave Cq/RT=1.00(1.25)/10(0) 7.25.0503.00 QTY:2 FL/-/5/-/-/R/- Scale =.5"/Ft.

ALPINE
ITW Building Components Group, Inc.
Haines City, FL 33844
FL Certificate of Authorization # 567

WARNING TRUSSES REQUIRE EXTREME CARE IN FABRICATION, HANDLING, SHIPPING, INSTALLING AND BRACING. REFER TO BCSI (BUILDING COMPONENT SAFETY INFORMATION), PUBLISHED BY TPI (TRUSS PLATE INSTITUTE, 218 NORTH LEE STREET, SUITE 312, ALEXANDRIA, VA, 22314) AND WTCA (WOOD TRUSS COUNCIL OF AMERICA, 6300 ENTERPRISE LANE, MADISON, WI 53719) FOR SAFETY PRACTICES PRIOR TO PERFORMING THESE FUNCTIONS. UNLESS OTHERWISE INDICATED TOP CHORD SHALL HAVE PROPERLY ATTACHED STRUCTURAL PANELS AND BOTTOM CHORD SHALL HAVE A PROPERLY ATTACHED RIGID CEILING.

IMPORTANTFURNISH A COPY OF THIS DESIGN TO THE INSTALLATION CONTRACTOR. ITW BCG, INC. SHALL NOT BE RESPONSIBLE FOR ANY DEVIATION FROM THIS DESIGN; ANY FAILURE TO BUILD THE TRUSS IN COMFORMANCE WITH TPI; OR FABRICATING, HANDLING, SHIPPING, INSTALLING & BRACING OF TRUSSES.
DESIGN CONFORMS WITH APPLICABLE PROVISIONS OF NDS (NATIONAL DESIGN SPEC, BY AF&PA) AND TPI. ITW BCG CONNECTOR PLATES ARE MADE OF 20/18/16GA (W,H/SS/K) ASTM A653 GRADE 40/60 (W, K/H,SS) GALV. STEEL. APPLY PLATES TO EACH FACE OF TRUSS AND, UNLESS OTHERWISE LOCATED ON THIS DESIGN, POSITION PER DRAWINGS 160A-Z. ANY INSPECTION OF PLATES FOLLOWED BY (1) SHALL BE PER ANNEX A3 OF TPI1-2002 SEC.3. A SEAL ON THIS DRAWING INDICATES ACCEPTANCE OF PROFESSIONAL ENGINEERING RESPONSIBILITY SOLELY FOR THE TRUSS COMPONENT DESIGN SHOWN. THE SUITABILITY AND USE OF THIS COMPONENT FOR ANY BUILDING IS THE RESPONSIBILITY OF THE BUILDING DESIGNER PER ANSI/TPI 1 SEC. 2.

JAMES F. COLLIAS, JR. LICENSED No. 52242 STATE OF FLORIDA PROFESSIONAL ENGINEER

Apr

TC LL	20.0 PSF	REF	R215-- 70992
TC DL	10.0 PSF	DATE	04/10/07
BC DL	10.0 PSF	DRW	HCUSR215 07100052
BC LL	0.0 PSF	HC-ENG	DAB/AP *
TOT.LD.	40.0 PSF	SEQN-	88568
DUR.FAC.	1.25	FROM	LRB
SPACING	24.0"	JREF-	1T6E215_Z03

THIS DWG PREPARED FROM COMPUTER INPUT (LOADS & DIMENSIONS) SUBMITTED BY TRUSS TPR.

Top chord 2x4 SP #2 N
Bot chord 2x4 SP #2 N

Wind reactions based on MWFRS pressures.

Plates sized for a minimum of 3.00 sq.in./piece.

The overall height of this truss excluding overhang is 1-10-3.

110 mph wind, 15.00 ft mean hgt, ASCE 7-02, CLOSED bldg, Located anywhere in roof, CAT II, EXP B, wind TC DL=5.0 psf, wind BC DL=5.0 psf. Iw=1.00 GCpi(+/-)=0.18

Deflection meets L/240 live and L/180 total load.

Shim all supports to solid bearing.

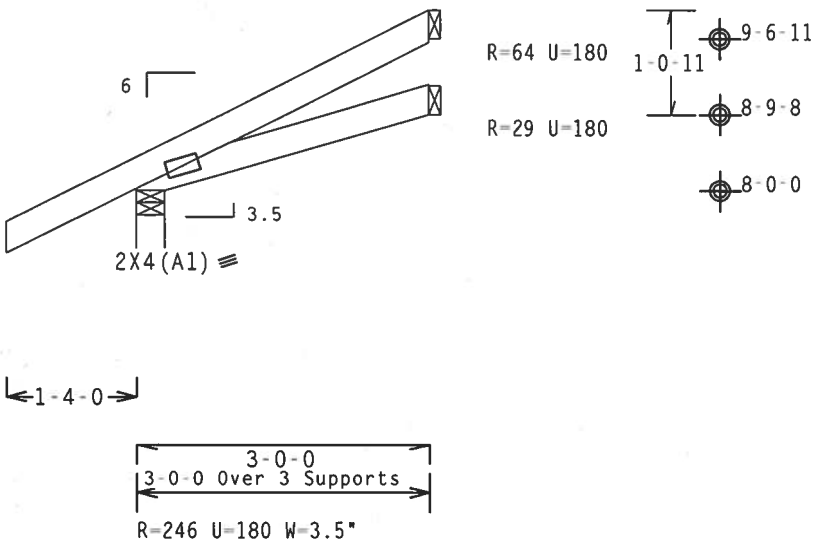

Design Crit: TPI-2002(STD)/FBC
Cq/RT=1.00(1.25)/10(0) 7.25.0503 QTY:2 FL/-/5/-/-/R/-

PLT TYP. Wave

Scale =.5"/Ft.

ALPINE
ITW Building Components Group, Inc.
Haines City, FL 33844
FL Certificate of Authorization # 567

WARNING TRUSSES REQUIRE EXTREME CARE IN FABRICATION, HANDLING, SHIPPING, INSTALLING AND BRACING. REFER TO BCSI (BUILDING COMPONENT SAFETY INFORMATION), PUBLISHED BY TPI (TRUSS PLATE INSTITUTE, 218 NORTH LEE STREET, SUITE 312, ALEXANDRIA, VA, 22314) AND WTCA (WOOD TRUSS COUNCIL OF AMERICA, 6300 ENTERPRISE LANE, MADISON, WI 53719) FOR SAFETY PRACTICES PRIOR TO PERFORMING THESE FUNCTIONS. UNLESS OTHERWISE INDICATED TOP CHORD SHALL HAVE PROPERLY ATTACHED STRUCTURAL PANELS AND BOTTOM CHORD SHALL HAVE A PROPERLY ATTACHED RIGID CEILING.

IMPORTANTFURNISH A COPY OF THIS DESIGN TO THE INSTALLATION CONTRACTOR. ITW BCG, INC. SHALL NOT BE RESPONSIBLE FOR ANY DEVIATION FROM THIS DESIGN; ANY FAILURE TO BUILD THE TRUSS IN CONFORMANCE WITH TPI; OR FABRICATING, HANDLING, SHIPPING, INSTALLING & BRACING OF TRUSSES.
DESIGN CONFORMS WITH APPLICABLE PROVISIONS OF NDS (NATIONAL DESIGN SPEC. BY AF&PA) AND TPI. ITW BCG CONNECTOR PLATES ARE MADE OF 20/18/16GA (W,H/SS/K) ASTM A653 GRADE 40/60 (W, K/H,SS) GALV. STEEL. APPLY PLATES TO EACH FACE OF TRUSS AND, UNLESS OTHERWISE LOCATED ON THIS DESIGN, POSITION PER DRAWINGS 160A-Z. ANY INSPECTION OF PLATES FOLLOWED BY (1) SHALL BE PER ANNEX A3 OF TPI1-2002 SEC.3. A SEAL ON THIS DRAWING INDICATES ACCEPTANCE OF PROFESSIONAL ENGINEERING RESPONSIBILITY SOLELY FOR THE TRUSS COMPONENT DESIGN SHOWN. THE SUITABILITY AND USE OF THIS COMPONENT FOR ANY BUILDING IS THE RESPONSIBILITY OF THE BUILDING DESIGNER PER ANSI/TPI 1 SEC. 2.

JAMES F. COLLINS JR. LICENSE No. 52222 STATE OF FLORIDA PROFESSIONAL ENGINEER
Apr 10 '07

TC LL	20.0 PSF	REF	R215-- 70993
TC DL	10.0 PSF	DATE	04/10/07
BC DL	10.0 PSF	DRW	HCUSR215 07100058
BC LL	0.0 PSF	HC-ENG	DAB/AP *
TOT.LD.	40.0 PSF	SEQN-	88455
DUR.FAC.	1.25	FROM	LRB
SPACING	24.0"	JREF-	1T6E215_Z03

(4490-/LOT 20 COLUMBIA HOMESITES /Compass Builders -- , ** - JC5B)

Top chord 2x4 SP #2 N
Bot chord 2x4 SP #2 N
Webs 2x4 SP #2 N

Wind reactions based on MWFRS pressures.

Plates sized for a minimum of 3.00 sq.in./piece.

The overall height of this truss excluding overhang is 2-10-3.

110 mph wind, 15.00 ft mean hgt, ASCE 7-02, CLOSED bldg, not located within 4.50 ft from roof edge, CAT II, EXP B, wind TC DL=5.0 psf, wind BC DL=5.0 psf. Iw=1.00 GCpi(+/-)=0.18

Deflection meets L/240 live and L/180 total load.

Shim all supports to solid bearing.

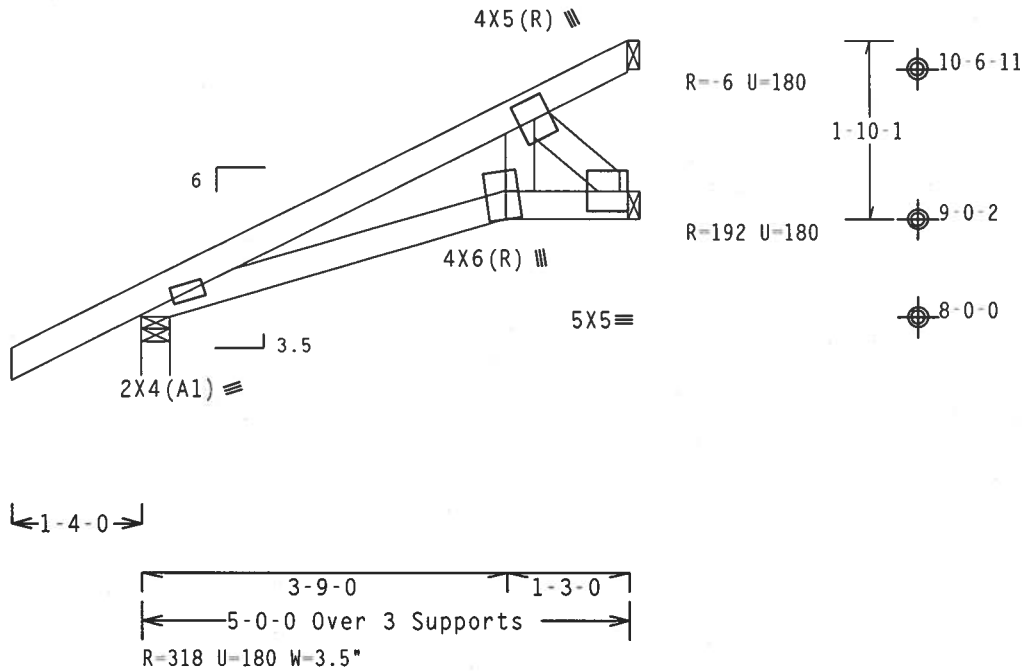

Design Crit: TPI-2002(STD)/FBC

PLT TYP. Wave Cq/RT=1.00(1.25)/10(0) 7.25.0503 QTY:2 FL/-/5/-/-/R/- Scale =.5"/Ft.

ALPINE
ITW Building Components Group, Inc.
Haines City, FL 33844
FL Certificate of Authorization # 567

WARNING TRUSSES REQUIRE EXTREME CARE IN FABRICATION, HANDLING, SHIPPING, INSTALLING AND BRACING. REFER TO BCSI (BUILDING COMPONENT SAFETY INFORMATION), PUBLISHED BY TPI (TRUSS PLATE INSTITUTE, 218 NORTH LEE STREET, SUITE 312, ALEXANDRIA, VA, 22314) AND WTCA (WOOD TRUSS COUNCIL OF AMERICA, 6300 ENTERPRISE LANE, MADISON, WI 53719) FOR SAFETY PRACTICES PRIOR TO PERFORMING THESE FUNCTIONS. UNLESS OTHERWISE INDICATED TOP CHORD SHALL HAVE PROPERLY ATTACHED STRUCTURAL PANELS AND BOTTOM CHORD SHALL HAVE A PROPERLY ATTACHED RIGID CEILING.

IMPORTANTFURNISH A COPY OF THIS DESIGN TO THE INSTALLATION CONTRACTOR. ITW BCG, INC. SHALL NOT BE RESPONSIBLE FOR ANY DEVIATION FROM THIS DESIGN; ANY FAILURE TO BUILD THE TRUSS IN COMFORMANCE WITH TPI; OR FABRICATING, HANDLING, SHIPPING, INSTALLING & BRACING OF TRUSSES. DESIGN CONFORMS WITH APPLICABLE PROVISIONS OF NDS (NATIONAL DESIGN SPEC. BY AF&PA) AND TPI. ITW BCG CONNECTOR PLATES ARE MADE OF 20/18/16GA (W,H/SS/K) ASTM A653 GRADE 40/60 (W, K/H,SS) GALV. STEEL. APPLY PLATES TO EACH FACE OF TRUSS AND, UNLESS OTHERWISE LOCATED ON THIS DESIGN, POSITION PER DRAWINGS 160A-Z. ANY INSPECTION OF PLATES FOLLOWED BY (1) SHALL BE PER ANNEX A3 OF TPI1-2002 SEC.3. A SEAL ON THIS DRAWING INDICATES ACCEPTANCE OF PROFESSIONAL ENGINEERING RESPONSIBILITY SOLELY FOR THE TRUSS COMPONENT DESIGN SHOWN. THE SUITABILITY AND USE OF THIS COMPONENT FOR ANY BUILDING IS THE RESPONSIBILITY OF THE BUILDING DESIGNER PER ANSI/TPI 1 SEC. 2.

JAMES F. COLLINS, JR. LICENSE No. 62212 STATE OF FLORIDA PROFESSIONAL ENGINEER
Apr 10 07

TC LL	20.0 PSF	REF	R215-- 70994
TC DL	10.0 PSF	DATE	04/10/07
BC DL	10.0 PSF	DRW	HCUSR215 07100057
BC LL	0.0 PSF	HC-ENG	DAB/AP *
TOT.LD.	40.0 PSF	SEQN-	88457
DUR.FAC.	1.25	FROM	LRB
SPACING	24.0"	JREF-	1T6E215_Z03

(4490-/LOT 20 COLUMBIA HOMESITES /Compass Builders -- , ** - JE7)

Top chord 2x4 SP #2 N
Bot chord 2x4 SP #2 N

Wind reactions based on MWFRS pressures.

Plates sized for a minimum of 3.00 sq.in./piece.

110 mph wind, 15.00 ft mean hgt, ASCE 7-02, CLOSED bldg, not located within 4.50 ft from roof edge, CAT II, EXP B, wind TC DL=5.0 psf, wind BC DL=5.0 psf. Iw=1.00 GCpi(+/-)=0.18

Deflection meets L/240 live and L/180 total load.

The overall height of this truss excluding overhang is 3-10-3.

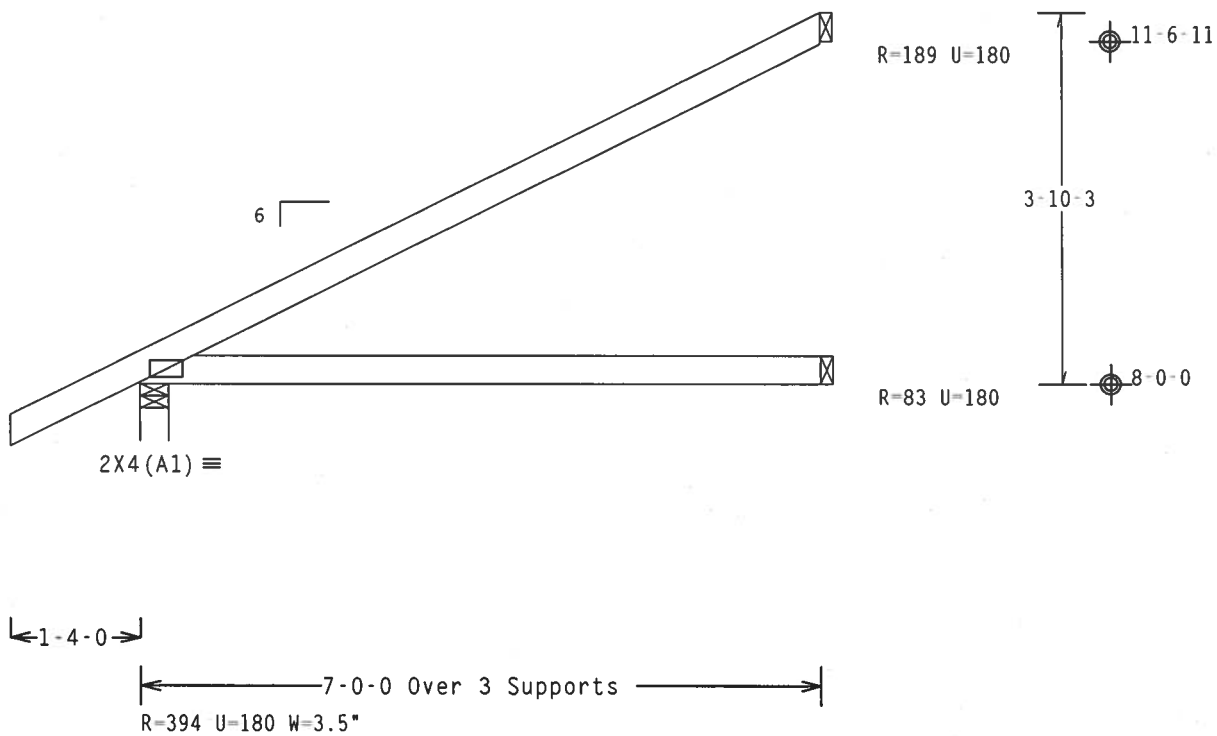

Design Crit: TPI-2002(STD)/FBC

PLT TYP. Wave Cq/RT=1.00(1.25)/10(0) 7.25.0503.0 QTY:11 FL/-/5/-/-/R/- Scale =.5"/Ft.

ALPINE
ITW Building Components Group, Inc.
Haines City, FL 33844
FL Certificate of Authorization # 567

WARNING TRUSSES REQUIRE EXTREME CARE IN FABRICATION, HANDLING, SHIPPING, INSTALLING AND BRACING. REFER TO BCSI (BUILDING COMPONENT SAFETY INFORMATION), PUBLISHED BY TPI (TRUSS PLATE INSTITUTE, 218 NORTH LEE STREET, SUITE 312, ALEXANDRIA, VA. 22314) AND WTCA (WOOD TRUSS COUNCIL OF AMERICA, 6300 ENTERPRISE LANE, MADISON, WI 53719) FOR SAFETY PRACTICES PRIOR TO PERFORMING THESE FUNCTIONS. UNLESS OTHERWISE INDICATED TOP CHORD SHALL HAVE PROPERLY ATTACHED STRUCTURAL PANELS AND BOTTOM CHORD SHALL HAVE A PROPERLY ATTACHED RIGID CEILING.

IMPORTANTFURNISH A COPY OF THIS DESIGN TO THE INSTALLATION CONTRACTOR. ITW BCG, INC. SHALL NOT BE RESPONSIBLE FOR ANY DEVIATION FROM THIS DESIGN; ANY FAILURE TO BUILD THE TRUSS IN CONFORMANCE WITH TPI; OR FABRICATING, HANDLING, SHIPPING, INSTALLING & BRACING OF TRUSSES. DESIGN CONFORMS WITH APPLICABLE PROVISIONS OF NDS (NATIONAL DESIGN SPEC. BY AF&PA) AND TPI. ITW BCG CONNECTOR PLATES ARE MADE OF 20/18/16GA (W,H/SS/K) ASTM A653 GRADE 40/60 (W, K/H,SS) GALV. STEEL. APPLY PLATES TO EACH FACE OF TRUSS AND, UNLESS OTHERWISE LOCATED ON THIS DESIGN, POSITION PER DRAWINGS 160A-Z. ANY INSPECTION OF PLATES FOLLOWED BY (I) SHALL BE PER ANNEX A3 OF TPI1-2002 SEC.3. A SEAL ON THIS DRAWING INDICATES ACCEPTANCE OF PROFESSIONAL ENGINEERING RESPONSIBILITY SOLELY FOR THE TRUSS COMPONENT DESIGN SHOWN. THE SUITABILITY AND USE OF THIS COMPONENT FOR ANY BUILDING IS THE RESPONSIBILITY OF THE BUILDING DESIGNER PER ANSI/TPI 1 SEC. 2.

JAMES F. COLLINS JR. LICENSE No. 62212 STATE OF FLORIDA PROFESSIONAL ENGINEER
Apr 10 07

TC LL	20.0 PSF	REF	R215-- 70995
TC DL	10.0 PSF	DATE	04/10/07
BC DL	10.0 PSF	DRW	HCUSR215 07100074
BC LL	0.0 PSF	HC-ENG	DAB/AP *
TOT.LD.	40.0 PSF	SEQN-	88420
DUR.FAC.	1.25	FROM	LRB
SPACING	24.0"	JREF-	1T6E215_Z03

(4490-/LOT 20 COLUMBIA HOMESITES /Compass Builders -- , ** - JE7A)

Top chord 2x4 SP #2 N
Bot chord 2x4 SP #2 N
Webs 2x4 SP #2 N

Wind reactions based on MWFRS pressures.

Plates sized for a minimum of 3.00 sq.in./piece.

110 mph wind, 15.00 ft mean hgt, ASCE 7-02, CLOSED bldg, not located within 4.50 ft from roof edge, CAT II, EXP B, wind TC DL=5.0 psf, wind BC DL=5.0 psf. Iw=1.00 GCpi(+/-)=0.18

Deflection meets L/240 live and L/180 total load.

The overall height of this truss excluding overhang is 3-10-3.

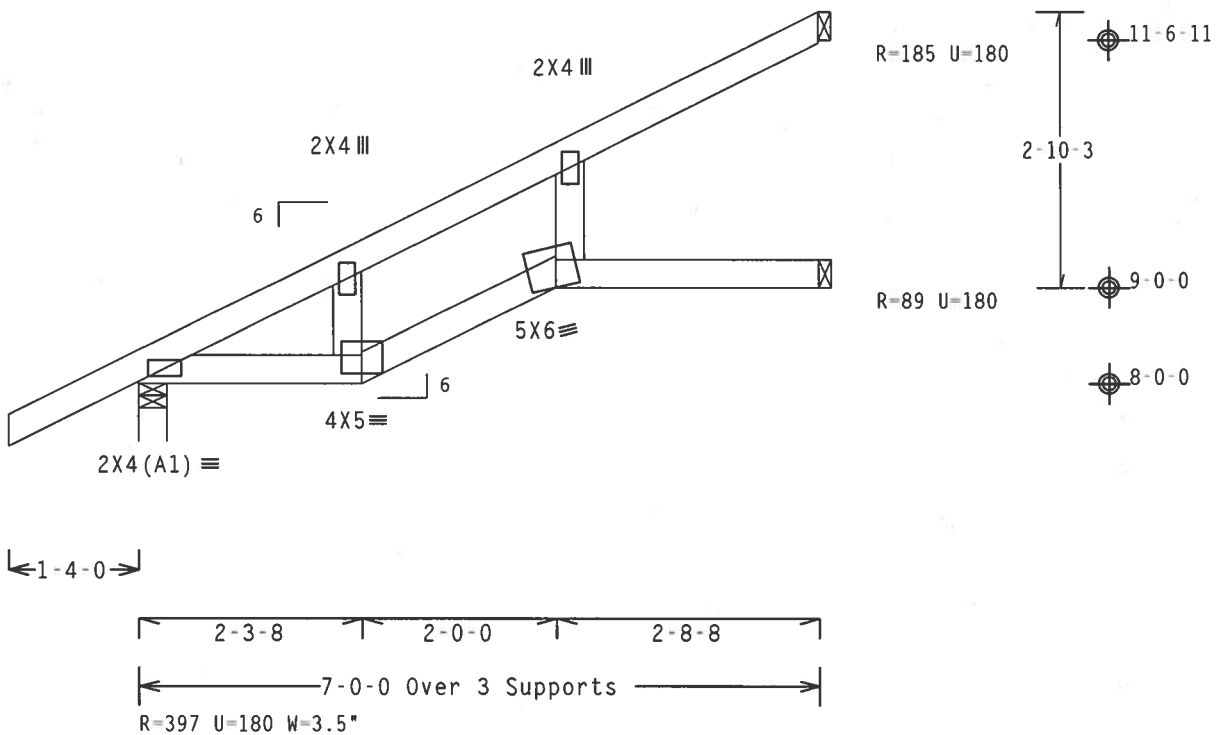

Design Crit: TPI-2002(STD)/FBC

PLT TYP. Wave Cq/RT=1.00(1.25)/10(0) 7.25.0503.00 QTY:3 FL/-/5/-/-/R/- Scale =.5"/Ft.

ALPINE

ITW Building Components Group, Inc.
Haines City, FL 33844
FL Certificate of Authorization # 567

WARNING TRUSSES REQUIRE EXTREME CARE IN FABRICATION, HANDLING, SHIPPING, INSTALLING AND BRACING. REFER TO BCSI (BUILDING COMPONENT SAFETY INFORMATION), PUBLISHED BY TPI (TRUSS PLATE INSTITUTE, 218 NORTH LEE STREET, SUITE 312, ALEXANDRIA, VA, 22314) AND WTCA (WOOD TRUSS COUNCIL OF AMERICA, 6300 ENTERPRISE LANE, MADISON, WI 53719) FOR SAFETY PRACTICES PRIOR TO PERFORMING THESE FUNCTIONS. UNLESS OTHERWISE INDICATED TOP CHORD SHALL HAVE PROPERLY ATTACHED STRUCTURAL PANELS AND BOTTOM CHORD SHALL HAVE A PROPERLY ATTACHED RIGID CEILING.

IMPORTANTFURNISH A COPY OF THIS DESIGN TO THE INSTALLATION CONTRACTOR. ITW BCG, INC. SHALL NOT BE RESPONSIBLE FOR ANY DEVIATION FROM THIS DESIGN; ANY FAILURE TO BUILD THE TRUSS IN CONFORMANCE WITH TPI; OR FABRICATING, HANDLING, SHIPPING, INSTALLING & BRACING OF TRUSSES.
DESIGN CONFORMS WITH APPLICABLE PROVISIONS OF NDS (NATIONAL DESIGN SPEC. BY AF&PA) AND TPI. ITW BCG CONNECTOR PLATES ARE MADE OF 20/18/16GA (W.H/SS/K) ASTM A653 GRADE 40/60 (W. K/H.SS) GALV. STEEL. APPLY PLATES TO EACH FACE OF TRUSS AND, UNLESS OTHERWISE LOCATED ON THIS DESIGN, POSITION PER DRAWINGS 160A-Z. ANY INSPECTION OF PLATES FOLLOWED BY (1) SHALL BE PER ANNEX A3 OF TPI1-2002 SEC.3. A SEAL ON THIS DRAWING INDICATES ACCEPTANCE OF PROFESSIONAL ENGINEERING RESPONSIBILITY SOLELY FOR THE TRUSS COMPONENT DESIGN SHOWN. THE SUITABILITY AND USE OF THIS COMPONENT FOR ANY BUILDING IS THE RESPONSIBILITY OF THE BUILDING DESIGNER PER ANSI/TPI 1 SEC. 2.

JAMES F. COLLINS, JR. LICENSE No. 52212 STATE OF FLORIDA PROFESSIONAL ENGINEER

Apr 10, 2007

TC LL	20.0 PSF	REF	R215-- 70996
TC DL	10.0 PSF	DATE	04/10/07
BC DL	10.0 PSF	DRW	HCUSR215 07100054
BC LL	0.0 PSF	HC-ENG	DAB/AP *
TOT.LD.	40.0 PSF	SEQN-	88574
DUR.FAC.	1.25	FROM	LRB
SPACING	24.0"	JREF-	1T6E215_Z03

(4490-/LOT 20 COLUMBIA HOMESITES /Compass Builders -- , ** - JE7B)

Top chord 2x4 SP #2 N
Bot chord 2x6 SP SS
Webs 2x4 SP #2 N

SPECIAL LOADS
------(LUMBER DUR.FAC.=1.25 / PLATE DUR.FAC.=1.25)
TC - From 62 PLF at 0.00 to 62 PLF at 7.00
BC - From 21 PLF at 0.00 to 21 PLF at 3.75
BC - From 20 PLF at 3.75 to 20 PLF at 7.00
BC - 897 LB Conc. Load at 2.06, 4.06, 6.06

Shim all supports to solid bearing.

110 mph wind, 15.00 ft mean hgt, ASCE 7-02, CLOSED bldg, not located within 4.50 ft from roof edge, CAT II, EXP B, wind TC DL=5.0 psf, wind BC DL=5.0 psf. Iw=1.00 GCpi(+/-)=0.18

Wind reactions based on MWFRS pressures.

Right end vertical not exposed to wind pressure.

Deflection meets L/240 live and L/180 total load.

Plates sized for a minimum of 3.00 sq.in./piece.

The overall height of this truss excluding overhang is 3-10-3.

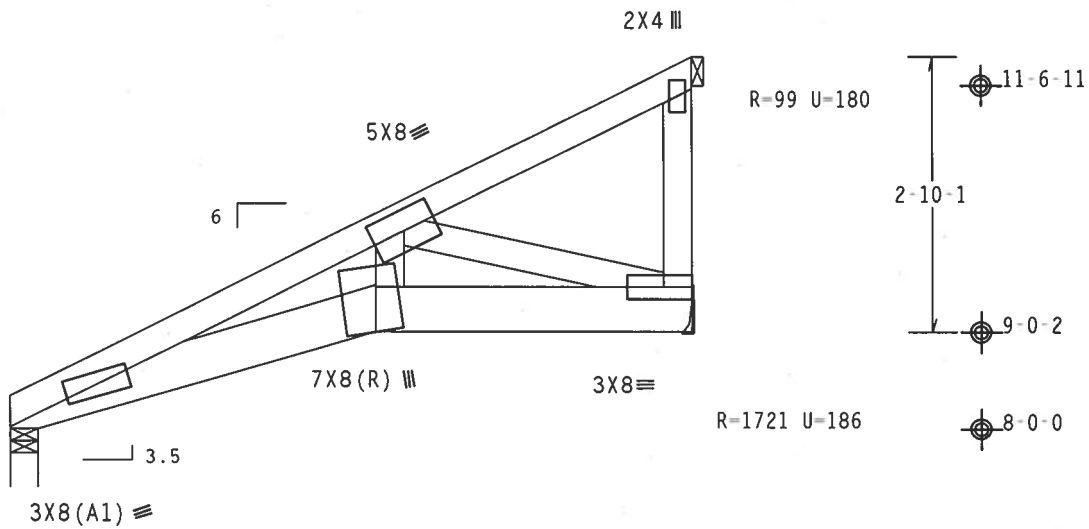

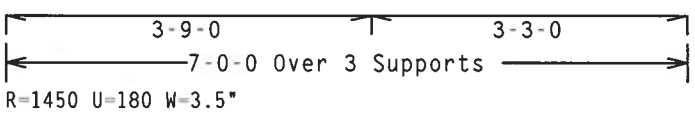

Design Crit: TPI-2002(STD)/FBC
Cq/RT=1.00(1.25)/10(0) 7.25.0503

PLT TYP. Wave QTY:1 FL/-/5/-/-/R/- Scale =.5"/Ft.

ALPINE
ITW Building Components Group, Inc.
Haines City, FL 33844
FL Certificate of Authorization # 567

WARNING TRUSSES REQUIRE EXTREME CARE IN FABRICATION, HANDLING, SHIPPING, INSTALLING AND BRACING. REFER TO BCSI (BUILDING COMPONENT SAFETY INFORMATION), PUBLISHED BY TPI (TRUSS PLATE INSTITUTE, 218 NORTH LEE STREET, SUITE 312, ALEXANDRIA, VA, 22314) AND WTCA (WOOD TRUSS COUNCIL OF AMERICA, 6300 ENTERPRISE LANE, MADISON, WI 53719) FOR SAFETY PRACTICES PRIOR TO PERFORMING THESE FUNCTIONS. UNLESS OTHERWISE INDICATED TOP CHORD SHALL HAVE PROPERLY ATTACHED STRUCTURAL PANELS AND BOTTOM CHORD SHALL HAVE A PROPERLY ATTACHED RIGID CEILING.

IMPORTANTFURNISH A COPY OF THIS DESIGN TO THE INSTALLATION CONTRACTOR. ITW BCG, INC. SHALL NOT BE RESPONSIBLE FOR ANY DEVIATION FROM THIS DESIGN; ANY FAILURE TO BUILD THE TRUSS IN CONFORMANCE WITH TPI; OR FABRICATING, HANDLING, SHIPPING, INSTALLING & BRACING OF TRUSSES.
DESIGN CONFORMS WITH APPLICABLE PROVISIONS OF NDS (NATIONAL DESIGN SPEC. BY AF&PA) AND TPI. ITW BCG CONNECTOR PLATES ARE MADE OF 20/18/16GA (W,H/SS/K) ASTM A653 GRADE 40/60 (W, K/H,SS) GALV. STEEL. APPLY PLATES TO EACH FACE OF TRUSS AND, UNLESS OTHERWISE LOCATED ON THIS DESIGN, POSITION PER DRAWINGS 160A-Z. ANY INSPECTION OF PLATES FOLLOWED BY (1) SHALL BE PER ANNEX A3 OF TPI1-2002 SEC.3. A SEAL ON THIS DRAWING INDICATES ACCEPTANCE OF PROFESSIONAL ENGINEERING RESPONSIBILITY SOLELY FOR THE TRUSS COMPONENT DESIGN SHOWN. THE SUITABILITY AND USE OF THIS COMPONENT FOR ANY BUILDING IS THE RESPONSIBILITY OF THE BUILDING DESIGNER PER ANSI/TPI 1 SEC. 2.

JAMES F. COLLINS JR. LICENSE No. 57212 STATE OF FLORIDA PROFESSIONAL ENGINEER
Apr 10 07

TC LL	20.0 PSF	REF	R215-- 70997
TC DL	10.0 PSF	DATE	04/10/07
BC DL	10.0 PSF	DRW	HCUSR215 07100044
BC LL	0.0 PSF	HC-ENG	DAB/AP
TOT.LD.	40.0 PSF	SEQN-	88510
DUR.FAC.	1.25	FROM	LRB
SPACING	24.0"	JREF-	1T6E215_Z03

(4490-/LOT 20 COLUMBIA HOMESITES /Compass Builders -- , ** - JH10)

Top chord 2x4 SP #2 N
Bot chord 2x4 SP SS
Webs 2x4 SP #2 N

110 mph wind, 15.00 ft mean hgt, ASCE 7-02, CLOSED bldg, not located within 4.50 ft from roof edge, CAT II, EXP B, wind TC DL=5.0 psf, wind BC DL=5.0 psf. Iw=1.00 GCpi(+/-)=0.18

Wind reactions based on MWFRS pressures.

Deflection meets L/240 live and L/180 total load.

Plates sized for a minimum of 3.00 sq.in./piece.

SPECIAL LOADS
------(LUMBER DUR.FAC.=1.25 / PLATE DUR.FAC.=1.25)

TC -	From	61 PLF	at -1.89	to	61 PLF	at	9.90
BC -	From	4 PLF	at -1.89	to	4 PLF	at	0.00
BC -	From	20 PLF	at 0.00	to	20 PLF	at	9.90
TC -	78 LB	Conc. Load	at 1.48				
TC -	131 LB	Conc. Load	at 4.31				
TC -	259 LB	Conc. Load	at 7.13				
BC -	23 LB	Conc. Load	at 1.48				
BC -	52 LB	Conc. Load	at 4.31				
BC -	111 LB	Conc. Load	at 7.13				

The overall height of this truss excluding overhang is 3-9-14.

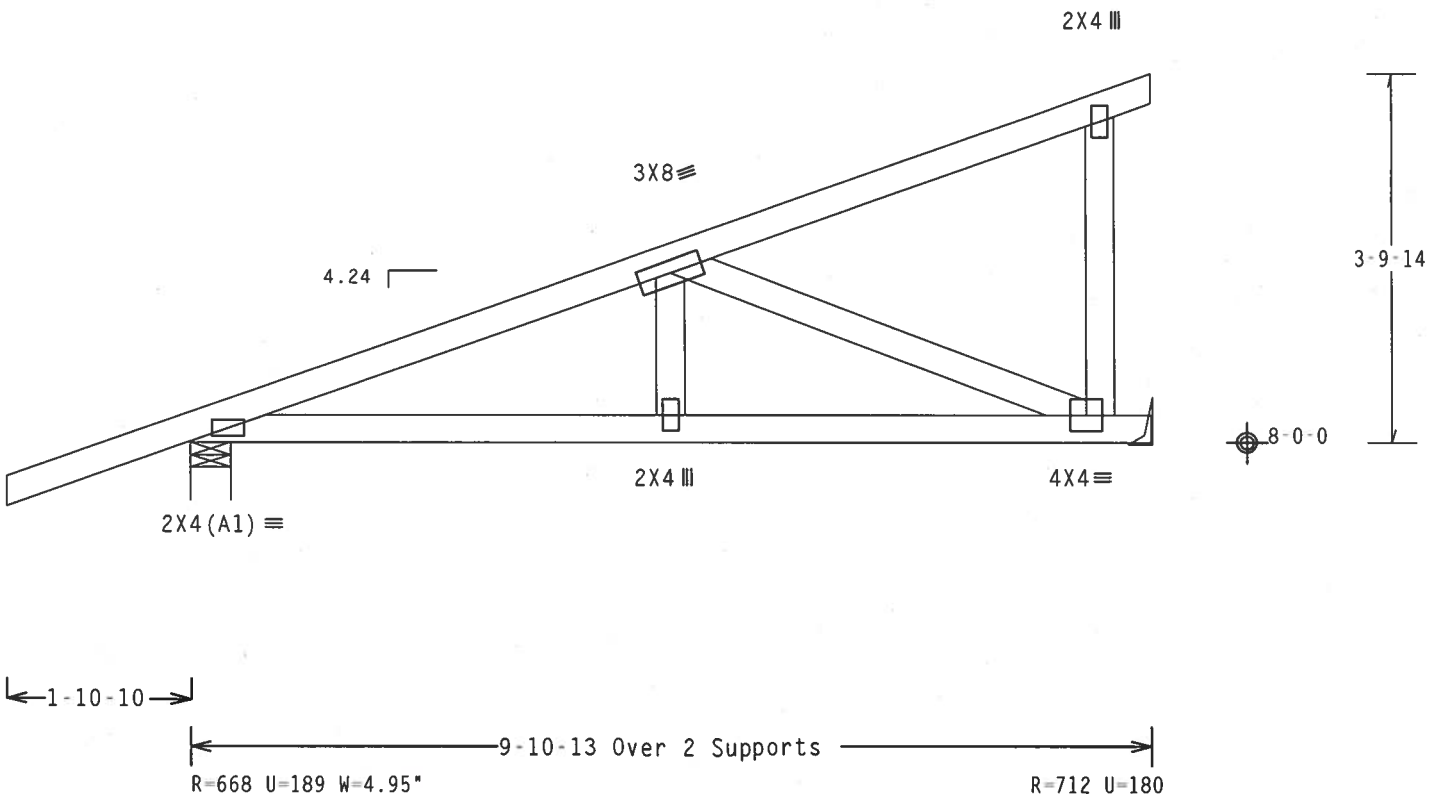

Design Crit: TPI-2002(STD)/FBC

PLT TYP. Wave Cq/RT=1.00(1.25)/10(0) 7.25.0503.00 QTY:3 FL/-/5/-/-/R/- Scale =.5"/Ft.

ALPINE
ITW Building Components Group, Inc.
Haines City, FL 33844
FL Certificate of Authorization # 567

WARNING TRUSSES REQUIRE EXTREME CARE IN FABRICATION, HANDLING, SHIPPING, INSTALLING AND BRACING. REFER TO BCSI (BUILDING COMPONENT SAFETY INFORMATION), PUBLISHED BY TPI (TRUSS PLATE INSTITUTE, 218 NORTH LEE STREET, SUITE 312, ALEXANDRIA, VA, 22314) AND WTCA (WOOD TRUSS COUNCIL OF AMERICA, 6300 ENTERPRISE LANE, MADISON, WI 53719) FOR SAFETY PRACTICES PRIOR TO PERFORMING THESE FUNCTIONS. UNLESS OTHERWISE INDICATED TOP CHORD SHALL HAVE PROPERLY ATTACHED STRUCTURAL PANELS AND BOTTOM CHORD SHALL HAVE A PROPERLY ATTACHED RIGID CEILING.

IMPORTANTFURNISH A COPY OF THIS DESIGN TO THE INSTALLATION CONTRACTOR. ITW BCG, INC. SHALL NOT BE RESPONSIBLE FOR ANY DEVIATION FROM THIS DESIGN; ANY FAILURE TO BUILD THE TRUSS IN COMFORMANCE WITH TPI; OR FABRICATING, HANDLING, SHIPPING, INSTALLING & BRACING OF TRUSSES.
DESIGN CONFORMS WITH APPLICABLE PROVISIONS OF NDS (NATIONAL DESIGN SPEC, BY AF&PA) AND TPI. ITW BCG CONNECTOR PLATES ARE MADE OF 20/18/16GA (W,H/SS/K) ASTM A653 GRADE 40/60 (W, K/H,SS) GALV. STEEL. APPLY PLATES TO EACH FACE OF TRUSS AND, UNLESS OTHERWISE LOCATED ON THIS DESIGN, POSITION PER DRAWINGS 160A-Z. ANY INSPECTION OF PLATES FOLLOWED BY (1) SHALL BE PER ANNEX A3 OF TPI1-2002 SEC.3. A SEAL ON THIS DRAWING INDICATES ACCEPTANCE OF PROFESSIONAL ENGINEERING RESPONSIBILITY SOLELY FOR THE TRUSS COMPONENT DESIGN SHOWN. THE SUITABILITY AND USE OF THIS COMPONENT FOR ANY BUILDING IS THE RESPONSIBILITY OF THE BUILDING DESIGNER PER ANSI/TPI 1 SEC. 2.

JAMES F. COLLINS JR. LICENSED No 52212 STATE OF FLORIDA PROFESSIONAL ENGINEER
Apr 10

TC LL	20.0 PSF	REF	R215-- 70998
TC DL	10.0 PSF	DATE	04/10/07
BC DL	10.0 PSF	DRW	HCUSR215 07100071
BC LL	0.0 PSF	HC-ENG	DAB/AP
TOT.LD.	40.0 PSF	SEQN-	88592
DUR.FAC.	1.25	FROM	LRB
SPACING	24.0"	JREF-	1T6E215_Z03

(4490-/LOT 20 COLUMBIA HOMESITES /Compass Builders -- , ** - JH10A)

Top chord 2x4 SP #2 N
Bot chord 2x4 SP #2 N
Webs 2x4 SP #2 N

110 mph wind, 15.00 ft mean hgt, ASCE 7-02, CLOSED bldg, not located within 4.50 ft from roof edge, CAT II, EXP B, wind TC DL=5.0 psf, wind BC DL=5.0 psf. Iw=1.00 GCpi(+/-)=0.18

Wind reactions based on MWFRS pressures.

Deflection meets L/240 live and L/180 total load.

Plates sized for a minimum of 3.00 sq.in./piece.

The overall height of this truss excluding overhang is 3-9-14.

SPECIAL LOADS
------(LUMBER DUR.FAC.=1.25 / PLATE DUR.FAC.=1.25)

TC -	From	61 PLF	at -1.89	to	61 PLF	at	9.90
BC -	From	4 PLF	at -1.89	to	4 PLF	at	0.00
BC -	From	20 PLF	at 0.00	to	20 PLF	at	3.24
BC -	From	21 PLF	at 3.24	to	21 PLF	at	6.01
BC -	From	20 PLF	at 6.01	to	20 PLF	at	9.90
TC -		78 LB	Conc. Load	at	1.48		
TC -		38 LB	Conc. Load	at	4.31		
TC -		264 LB	Conc. Load	at	7.13		
BC -		23 LB	Conc. Load	at	1.48		
BC -		149 LB	Conc. Load	at	4.31		
BC -		112 LB	Conc. Load	at	7.13		

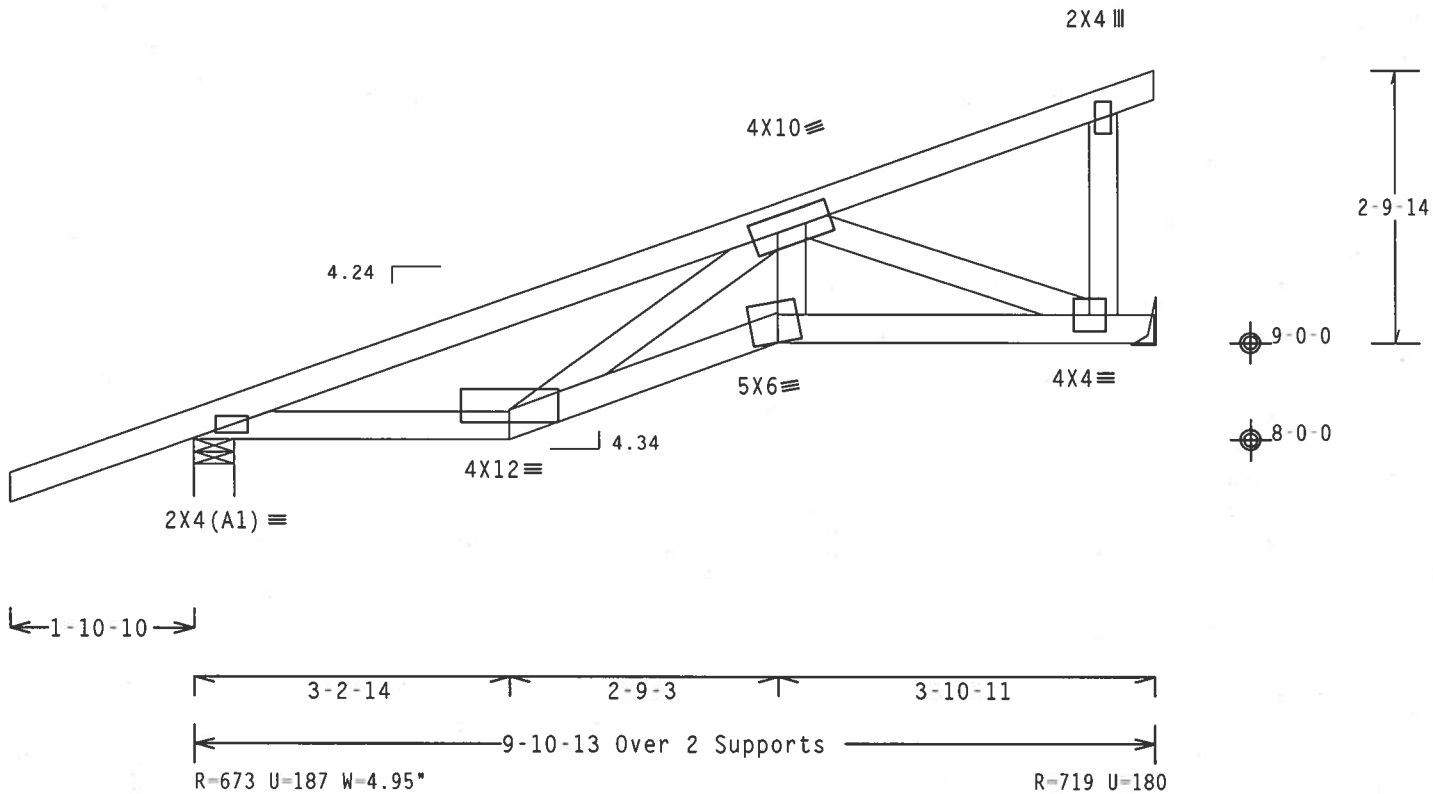

Design Crit: TPI-2002(STD)/FBC
Cq/RT=1.00(1.25)/10(0) 7.25.0503.00

PLT TYP. Wave QTY:1 FL/-/5/-/-/R/- Scale =.5"/Ft.

ALPINE
ITW Building Components Group, Inc.
Haines City, FL 33844
FL Certificate of Authorization # 567

WARNING TRUSSES REQUIRE EXTREME CARE IN FABRICATION, HANDLING, SHIPPING, INSTALLING AND BRACING. REFER TO BCSI (BUILDING COMPONENT SAFETY INFORMATION), PUBLISHED BY TPI (TRUSS PLATE INSTITUTE, 218 NORTH LEE STREET, SUITE 312, ALEXANDRIA, VA. 22314) AND WTCA (WOOD TRUSS COUNCIL OF AMERICA, 6300 ENTERPRISE LANE, MADISON, WI 53719) FOR SAFETY PRACTICES PRIOR TO PERFORMING THESE FUNCTIONS. UNLESS OTHERWISE INDICATED TOP CHORD SHALL HAVE PROPERLY ATTACHED STRUCTURAL PANELS AND BOTTOM CHORD SHALL HAVE A PROPERLY ATTACHED RIGID CEILING.

IMPORTANTFURNISH A COPY OF THIS DESIGN TO THE INSTALLATION CONTRACTOR. ITW BCG, INC. SHALL NOT BE RESPONSIBLE FOR ANY DEVIATION FROM THIS DESIGN; ANY FAILURE TO BUILD THE TRUSS IN CONFORMANCE WITH TPI; OR FABRICATING, HANDLING, SHIPPING, INSTALLING & BRACING OF TRUSSES.
DESIGN CONFORMS WITH APPLICABLE PROVISIONS OF NDS (NATIONAL DESIGN SPEC. BY AF&PA) AND TPI. ITW BCG CONNECTOR PLATES ARE MADE OF 20/18/16GA (W,H/SS/K) ASTM A653 GRADE 40/60 (W, K/H,SS) GALV. STEEL. APPLY PLATES TO EACH FACE OF TRUSS AND. UNLESS OTHERWISE LOCATED ON THIS DESIGN, POSITION PER DRAWINGS 160A-Z. ANY INSPECTION OF PLATES FOLLOWED BY (1) SHALL BE PER ANNEX A3 OF TPI1-2002 SEC.3. A SEAL ON THIS DRAWING INDICATES ACCEPTANCE OF PROFESSIONAL ENGINEERING RESPONSIBILITY SOLELY FOR THE TRUSS COMPONENT DESIGN SHOWN. THE SUITABILITY AND USE OF THIS COMPONENT FOR ANY BUILDING IS THE RESPONSIBILITY OF THE BUILDING DESIGNER PER ANSI/TPI 1 SEC. 2.

JAMES F. COLLINS, JR. LICENSE No. 52212 STATE OF FLORIDA PROFESSIONAL ENGINEER
Apr 10 '07

TC LL	20.0 PSF	REF	R215-- 70999
TC DL	10.0 PSF	DATE	04/10/07
BC DL	10.0 PSF	DRW	HCUSR215 07100051
BC LL	0.0 PSF	HC-ENG	DAB/AP
TOT.LD.	40.0 PSF	SEQN-	88463
DUR.FAC.	1.25	FROM	LRB
SPACING	24.0"	JREF-	1T6E215_Z03

(4490-/LOT 20 COLUMBIA HOMESITES /Compass Builders -- , ** - JH10B)

Top chord 2x4 SP #2 N
Bot chord 2x4 SP #2 N :B2 2x4 SP SS:
Webs 2x4 SP #2 N

110 mph wind, 15.00 ft mean hgt, ASCE 7-02, CLOSED bldg, not located within 4.50 ft from roof edge, CAT II, EXP B, wind TC DL=5.0 psf, wind BC DL=5.0 psf. Iw=1.00 GCpi(+/-)=0.18

Wind reactions based on MWFRS pressures.

Deflection meets L/240 live and L/180 total load.

Plates sized for a minimum of 3.00 sq.in./piece.

SPECIAL LOADS
------(LUMBER DUR.FAC.=1.25 / PLATE DUR.FAC.=1.25)

TC -	From	61 PLF	at -1.89	to	61 PLF	at	9.90
BC -	From	4 PLF	at -1.89	to	4 PLF	at	-0.00
BC -	From	20 PLF	at -0.00	to	20 PLF	at	5.24
BC -	From	20 PLF	at 5.24	to	20 PLF	at	9.90
TC -	48 LB	Conc. Load	at 1.48				
TC -	129 LB	Conc. Load	at 4.31				
TC -	12 LB	Conc. Load	at 7.13				
BC -	53 LB	Conc. Load	at 1.48				
BC -	57 LB	Conc. Load	at 4.31				
BC -	384 LB	Conc. Load	at 7.13				

The overall height of this truss excluding overhang is 3-9-14.

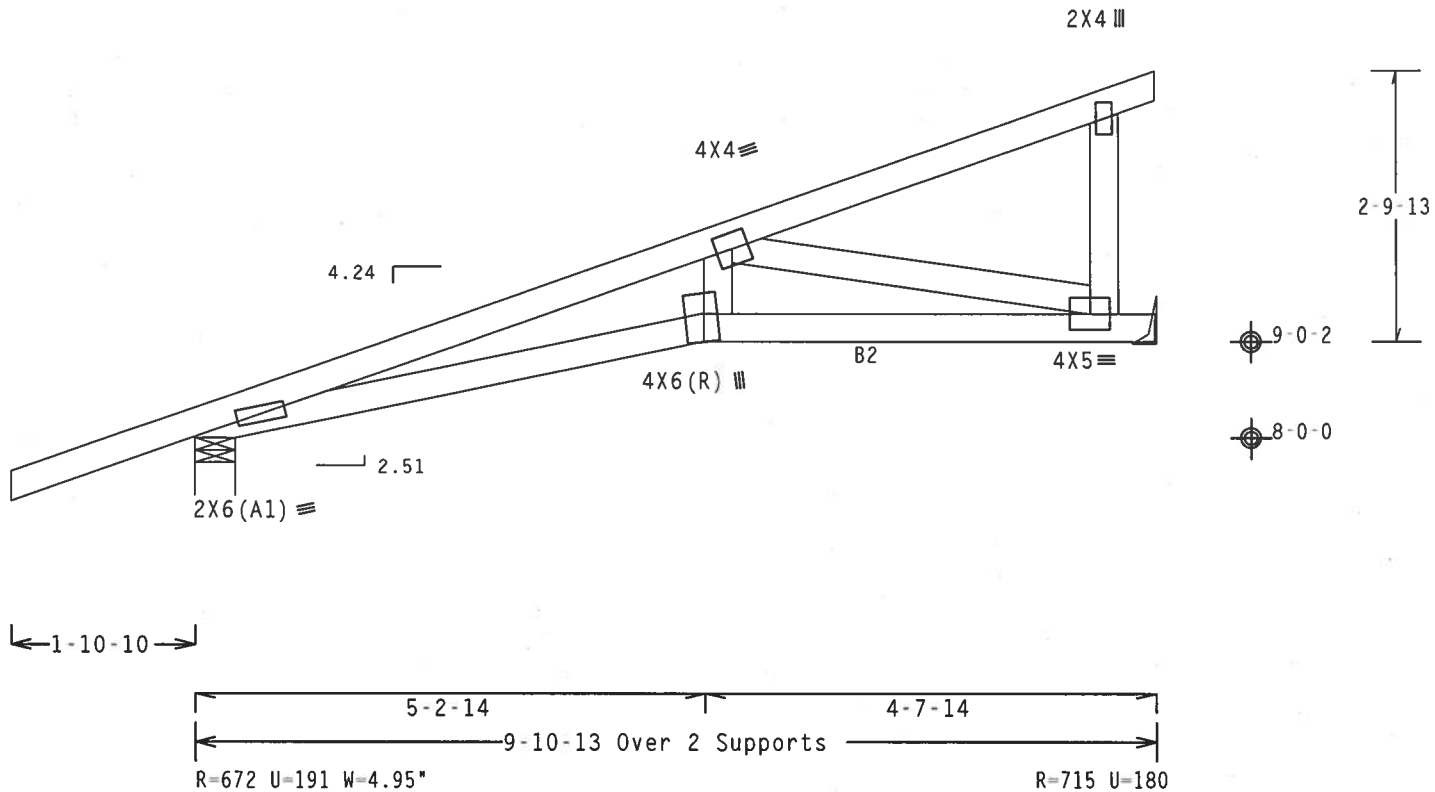

Design Crit: TPI-2002(STD)/FBC
PLT TYP. Wave Cq/RT=1.00(1.25)/10(0) 7.25.0503 00 QTY:1 FL/-/5/-/-/R/- Scale =.5"/Ft.

ALPINE
ITW Building Components Group, Inc.
Haines City, FL 33844
FL Certificate of Authorization # 567

WARNING TRUSSES REQUIRE EXTREME CARE IN FABRICATION, HANDLING, SHIPPING, INSTALLING AND BRACING. REFER TO BCSI (BUILDING COMPONENT SAFETY INFORMATION), PUBLISHED BY TPI (TRUSS PLATE INSTITUTE, 218 NORTH LEE STREET, SUITE 312, ALEXANDRIA, VA, 22314) AND WTCA (WOOD TRUSS COUNCIL OF AMERICA, 6300 ENTERPRISE LANE, MADISON, WI 53719) FOR SAFETY PRACTICES PRIOR TO PERFORMING THESE FUNCTIONS. UNLESS OTHERWISE INDICATED TOP CHORD SHALL HAVE PROPERLY ATTACHED STRUCTURAL PANELS AND BOTTOM CHORD SHALL HAVE A PROPERLY ATTACHED RIGID CEILING.

IMPORTANTFURNISH A COPY OF THIS DESIGN TO THE INSTALLATION CONTRACTOR. ITW BCG, INC. SHALL NOT BE RESPONSIBLE FOR ANY DEVIATION FROM THIS DESIGN; ANY FAILURE TO BUILD THE TRUSS IN COMFORMANCE WITH TPI; OR FABRICATING, HANDLING, SHIPPING, INSTALLING & BRACING OF TRUSSES.
DESIGN CONFORMS WITH APPLICABLE PROVISIONS OF NDS (NATIONAL DESIGN SPEC, BY AF&PA) AND TPI. ITW BCG CONNECTOR PLATES ARE MADE OF 20/18/16GA (W,H/SS/K) ASTM A653 GRADE 40/60 (W, K/H,SS) GALV. STEEL. APPLY PLATES TO EACH FACE OF TRUSS AND, UNLESS OTHERWISE LOCATED ON THIS DESIGN, POSITION PER DRAWINGS 160A-Z. ANY INSPECTION OF PLATES FOLLOWED BY (1) SHALL BE PER ANNEX A3 OF TPI1-2002 SEC.3. A SEAL ON THIS DRAWING INDICATES ACCEPTANCE OF PROFESSIONAL ENGINEERING RESPONSIBILITY SOLELY FOR THE TRUSS COMPONENT DESIGN SHOWN. THE SUITABILITY AND USE OF THIS COMPONENT FOR ANY BUILDING IS THE RESPONSIBILITY OF THE BUILDING DESIGNER PER ANSI/TPI 1 SEC. 2.

JAMES F. COLLINS JR. LICENSE No. 51212 STATE OF FLORIDA PROFESSIONAL ENGINEER
Apr 10,2007

TC LL	20.0 PSF	REF. R215-- 71000
TC DL	10.0 PSF	DATE 04/10/07
BC DL	10.0 PSF	DRW HCUSR215 07100056
BC LL	0.0 PSF	HC-ENG DAB/AP
TOT.LD.	40.0 PSF	SEQN- 88516
DUR.FAC.	1.25	FROM LRB
SPACING	24.0"	JREF- 1T6E215_Z03

(4490-/LOT 20 COLUMBIA HOMESITES /Compass Builders -- , ** - V1)

Top chord 2x4 SP #2 N
Bot chord 2x4 SP #2 N
Webs 2x4 SP #2 N

Wind reactions based on MWFRS pressures.

See DWG VALTRUSS0207 for valley details.

The overall height of this truss excluding overhang is 3-10-8.

110 mph wind, 15.00 ft mean hgt, ASCE 7-02, CLOSED bldg, Located anywhere in roof, CAT II, EXP B, wind TC DL=5.0 psf, wind BC DL=5.0 psf. Iw=1.00 GCpi(+/-)=0.18

Deflection meets L/240 live and L/180 total load.

Plates sized for a minimum of 3.00 sq.in./piece.

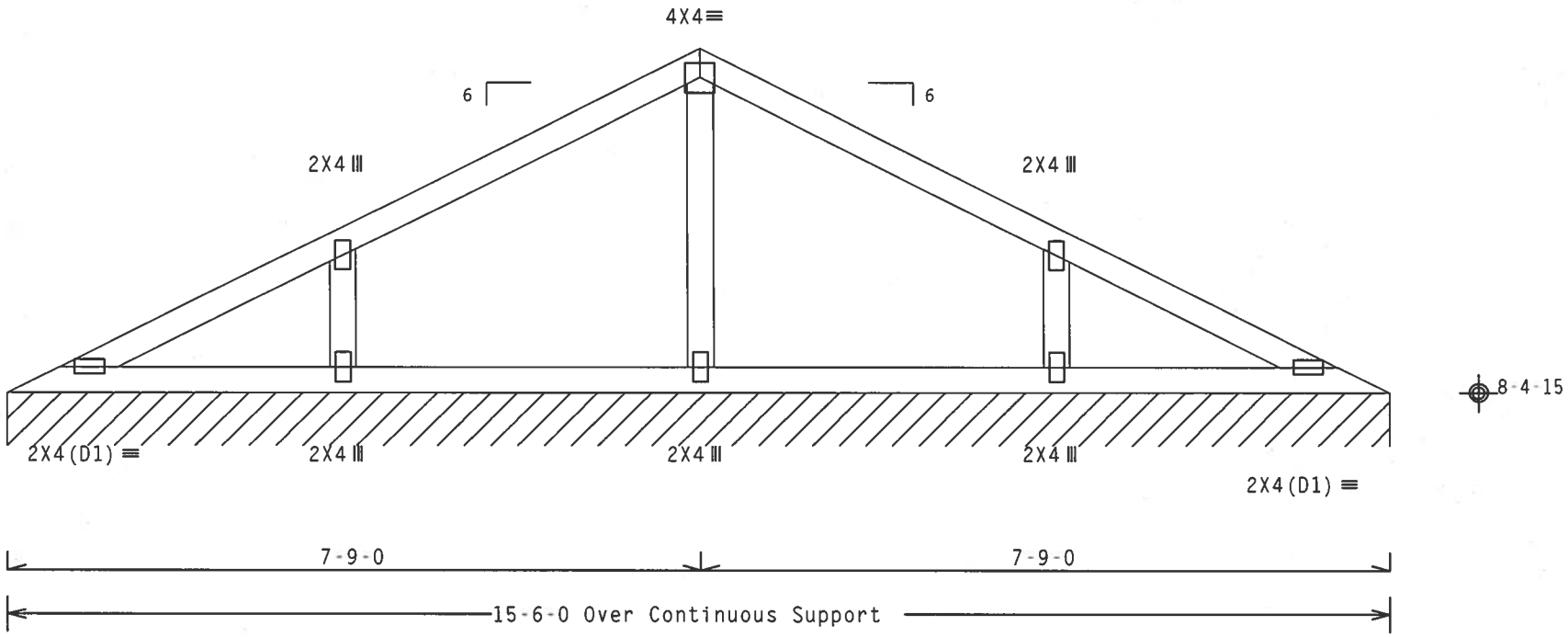

R=82 PLF U=12 PLF W=15-6-0

Design Crit: TPI-2002(STD)/FBC

PLT TYP. Wave Cq/RT=1.00(1.25)/10(0) 7.25.0503.0 QTY:1 FL/-/5/-/-/R/- Scale =.5"/Ft.

ALPINE

ITW Building Components Group, Inc.
Haines City, FL 33844
FL Certificate of Authorization # 567

WARNING TRUSSES REQUIRE EXTREME CARE IN FABRICATION, HANDLING, SHIPPING, INSTALLING AND BRACING. REFER TO BCSI (BUILDING COMPONENT SAFETY INFORMATION), PUBLISHED BY TPI (TRUSS PLATE INSTITUTE, 218 NORTH LEE STREET, SUITE 312, ALEXANDRIA, VA, 22314) AND WTCA (WOOD TRUSS COUNCIL OF AMERICA, 6300 ENTERPRISE LANE, MADISON, WI 53719) FOR SAFETY PRACTICES PRIOR TO PERFORMING THESE FUNCTIONS. UNLESS OTHERWISE INDICATED TOP CHORD SHALL HAVE PROPERLY ATTACHED STRUCTURAL PANELS AND BOTTOM CHORD SHALL HAVE A PROPERLY ATTACHED RIGID CEILING.

IMPORTANTFURNISH A COPY OF THIS DESIGN TO THE INSTALLATION CONTRACTOR. ITW BCG, INC. SHALL NOT BE RESPONSIBLE FOR ANY DEVIATION FROM THIS DESIGN; ANY FAILURE TO BUILD THE TRUSS IN CONFORMANCE WITH TPI; OR FABRICATING, HANDLING, SHIPPING, INSTALLING & BRACING OF TRUSSES. DESIGN CONFORMS WITH APPLICABLE PROVISIONS OF NDS (NATIONAL DESIGN SPEC. BY AF&PA) AND TPI. ITW BCG CONNECTOR PLATES ARE MADE OF 20/18/16GA (W,H/SS/K) ASTM A653 GRADE 40/60 (W, K/H,SS) GALV. STEEL. APPLY PLATES TO EACH FACE OF TRUSS AND, UNLESS OTHERWISE LOCATED ON THIS DESIGN, POSITION PER DRAWINGS 160A-Z. ANY INSPECTION OF PLATES FOLLOWED BY (I) SHALL BE PER ANNEX A3 OF TPI1-2002 SEC.3. A SEAL ON THIS DRAWING INDICATES ACCEPTANCE OF PROFESSIONAL ENGINEERING RESPONSIBILITY SOLELY FOR THE TRUSS COMPONENT DESIGN SHOWN. THE SUITABILITY AND USE OF THIS COMPONENT FOR ANY BUILDING IS THE RESPONSIBILITY OF THE BUILDING DESIGNER PER ANSI/TPI 1 SEC. 2.

JAMES P. COLLINS, JR. LICENSE No 52212 STATE OF FLORIDA PROFESSIONAL ENGINEER

Apr 10 07

TC LL	20.0 PSF	REF	R215-- 71001
TC DL	10.0 PSF	DATE	04/10/07
BC DL	10.0 PSF	DRW	HCUSR215 07100068
BC LL	0.0 PSF	HC-ENG	DAB/AP *
TOT.LD.	40.0 PSF	SEQN-	88442
DUR.FAC.	1.25	FROM	LRB
SPACING	24.0"	JREF-	1T6E215_Z03

Top chord 2x4 SP #2 N
Bot chord 2x4 SP #2 N
Webs 2x4 SP #2 N

Wind reactions based on MWFRS pressures.

See DWG VALTRUSS0207 for valley details.

The overall height of this truss excluding overhang is 2-10-8.

110 mph wind, 15.00 ft mean hgt, ASCE 7-02, CLOSED bldg, not located within 4.50 ft from roof edge, CAT II, EXP B, wind TC DL=5.0 psf, wind BC DL=5.0 psf. Iw=1.00 GCpi(+/-)=0.18

Deflection meets L/240 live and L/180 total load.

Plates sized for a minimum of 3.00 sq.in./piece.

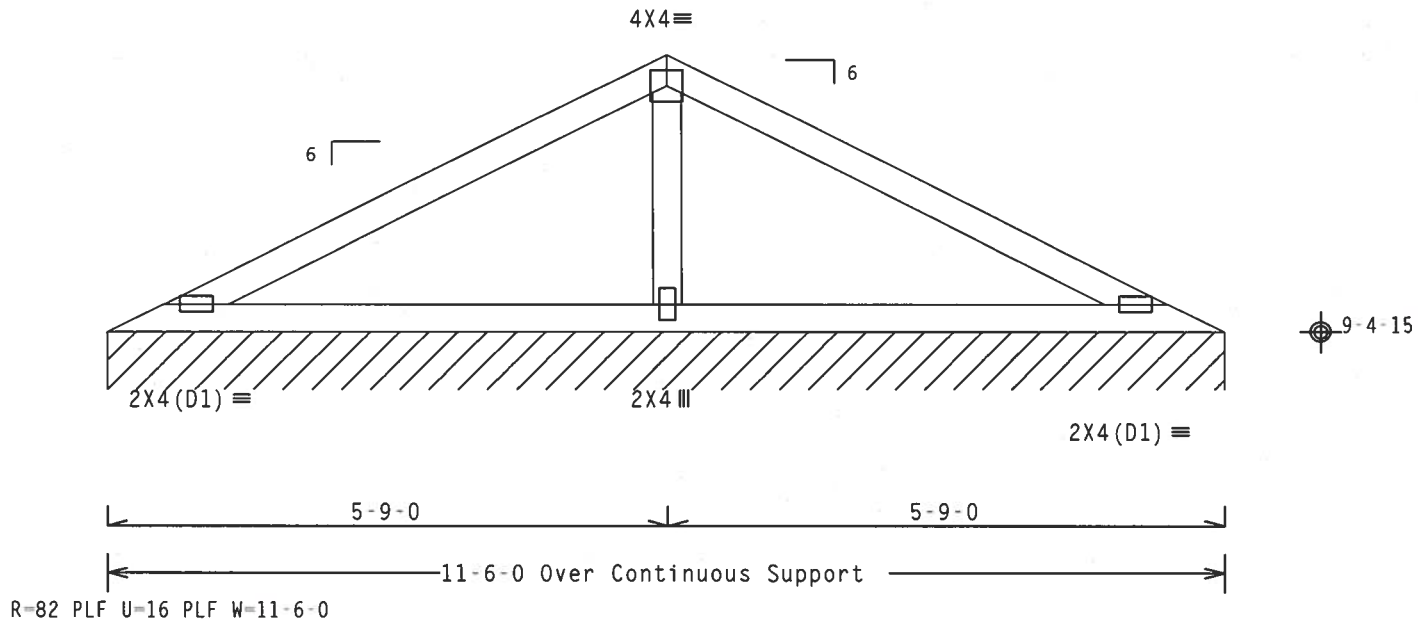

Design Crit: TPI-2002(STD)/FBC

PLT TYP. Wave Cq/RT=1.00(1.25)/10(0) 7.25.0503.00 QTY:1 FL/-/5/-/-/R/- Scale =.5"/Ft.

ALPINE
ITW Building Components Group, Inc.
Haines City, FL 33844
FL Certificate of Authorization # 567

WARNING TRUSSES REQUIRE EXTREME CARE IN FABRICATION, HANDLING, SHIPPING, INSTALLING AND BRACING. REFER TO BCSI (BUILDING COMPONENT SAFETY INFORMATION), PUBLISHED BY TPI (TRUSS PLATE INSTITUTE, 218 NORTH LEE STREET, SUITE 312, ALEXANDRIA, VA, 22314) AND WTCA (WOOD TRUSS COUNCIL OF AMERICA, 6300 ENTERPRISE LANE, MADISON, WI 53719) FOR SAFETY PRACTICES PRIOR TO PERFORMING THESE FUNCTIONS. UNLESS OTHERWISE INDICATED TOP CHORD SHALL HAVE PROPERLY ATTACHED STRUCTURAL PANELS AND BOTTOM CHORD SHALL HAVE A PROPERLY ATTACHED RIGID CEILING.

IMPORTANTFURNISH A COPY OF THIS DESIGN TO THE INSTALLATION CONTRACTOR. ITW BCG, INC. SHALL NOT BE RESPONSIBLE FOR ANY DEVIATION FROM THIS DESIGN; ANY FAILURE TO BUILD THE TRUSS IN CONFORMANCE WITH TPI; OR FABRICATING, HANDLING, SHIPPING, INSTALLING & BRACING OF TRUSSES. DESIGN CONFORMS WITH APPLICABLE PROVISIONS OF NDS (NATIONAL DESIGN SPEC. BY AF&PA) AND TPI. ITW BCG CONNECTOR PLATES ARE MADE OF 20/18/16GA (W,H/SS/K) ASTM A653 GRADE 40/60 (W, K/H,SS) GALV. STEEL. APPLY PLATES TO EACH FACE OF TRUSS AND, UNLESS OTHERWISE LOCATED ON THIS DESIGN, POSITION PER DRAWINGS 160A-Z. ANY INSPECTION OF PLATES FOLLOWED BY (1) SHALL BE PER ANNEX A3 OF TPI1-2002 SEC.3. A SEAL ON THIS DRAWING INDICATES ACCEPTANCE OF PROFESSIONAL ENGINEERING RESPONSIBILITY SOLELY FOR THE TRUSS COMPONENT DESIGN SHOWN. THE SUITABILITY AND USE OF THIS COMPONENT FOR ANY BUILDING IS THE RESPONSIBILITY OF THE BUILDING DESIGNER PER ANSI/TPI 1 SEC. 2.

JAMES F. COLLINS JR. LICENSE No. 52212 STATE OF FLORIDA PROFESSIONAL ENGINEER
Apr

TC LL	20.0 PSF	REF	R215-- 71002
TC DL	10.0 PSF	DATE	04/10/07
BC DL	10.0 PSF	DRW	HCUSR215 07100069
BC LL	0.0 PSF	HC-ENG	DAB/AP *
TOT.LD.	40.0 PSF	SEQN-	88440
DUR.FAC.	1.25	FROM	LRB
SPACING	24.0"	JREF-	1T6E215_Z03

ASCE 7-02: 110 MPH WIND SPEED, 15' MEAN HEIGHT, ENCLOSED, I = 1.00, EXPOSURE C

MAX GABLE VERTICAL LENGTH

2X4 GABLE VERTICAL SPACING	SPECIES	BRACE GRADE	NO BRACES	(1) 1X4 "L" BRACE * GROUP A	(1) 1X4 "L" BRACE * GROUP B	(1) 2X4 "L" BRACE * GROUP A	(1) 2X4 "L" BRACE * GROUP B	(2) 2X4 "L" BRACE ** GROUP A	(2) 2X4 "L" BRACE ** GROUP B	(1) 2X6 "L" BRACE * GROUP A	(1) 2X6 "L" BRACE * GROUP B	(2) 2X6 "L" BRACE ** GROUP A	(2) 2X6 "L" BRACE ** GROUP B
24" O.C.	SPF HF	#1 / #2	3' 10"	6' 8"	6' 10"	7' 11"	8' 1"	9' 5"	9' 8"	12' 5"	12' 9"	14' 0"	14' 0"
		#3	3' 9"	6' 0"	6' 0"	7' 11"	7' 11"	9' 5"	9' 5"	12' 4"	12' 4"	14' 0"	14' 0"
		STUD	3' 9"	6' 0"	6' 0"	7' 11"	7' 11"	9' 5"	9' 5"	12' 3"	12' 3"	14' 0"	14' 0"
		STANDARD	3' 9"	5' 2"	5' 2"	6' 9"	6' 9"	9' 1"	9' 1"	10' 7"	10' 7"	14' 0"	14' 0"
	SP DFL	#1	4' 3"	6' 8"	7' 2"	7' 11"	8' 6"	9' 5"	10' 2"	12' 5"	13' 5"	14' 0"	14' 0"
		#2	4' 2"	6' 8"	7' 2"	7' 11"	8' 6"	9' 5"	10' 2"	12' 5"	13' 5"	14' 0"	14' 0"
		#3	4' 0"	6' 2"	6' 2"	7' 11"	8' 1"	9' 5"	9' 11"	12' 5"	12' 8"	14' 0"	14' 0"
		STUD	4' 0"	6' 1"	6' 1"	7' 11"	8' 0"	9' 5"	9' 11"	12' 5"	12' 6"	14' 0"	14' 0"
		STANDARD	3' 10"	5' 3"	5' 3"	6' 11"	6' 11"	9' 4"	9' 4"	10' 10"	10' 10"	14' 0"	14' 0"
16" O.C.	SPF HF	#1 / #2	4' 5"	7' 8"	7' 10"	9' 1"	9' 4"	10' 10"	11' 1"	14' 0"	14' 0"	14' 0"	14' 0"
		#3	4' 4"	7' 4"	7' 4"	9' 1"	9' 1"	10' 10"	10' 10"	14' 0"	14' 0"	14' 0"	14' 0"
		STUD	4' 4"	7' 4"	7' 4"	9' 1"	9' 1"	10' 10"	10' 10"	14' 0"	14' 0"	14' 0"	14' 0"
		STANDARD	4' 4"	6' 4"	6' 4"	8' 4"	8' 4"	10' 10"	10' 10"	12' 11"	12' 11"	14' 0"	14' 0"
	SP DFL	#1	4' 10"	7' 8"	8' 3"	9' 1"	9' 9"	10' 10"	11' 8"	14' 0"	14' 0"	14' 0"	14' 0"
		#2	4' 9"	7' 8"	8' 3"	9' 1"	9' 9"	10' 10"	11' 8"	14' 0"	14' 0"	14' 0"	14' 0"
		#3	4' 6"	7' 7"	7' 7"	9' 1"	9' 6"	10' 10"	11' 4"	14' 0"	14' 0"	14' 0"	14' 0"
		STUD	4' 6"	7' 6"	7' 6"	9' 1"	9' 6"	10' 10"	11' 4"	14' 0"	14' 0"	14' 0"	14' 0"
		STANDARD	4' 5"	6' 5"	6' 5"	8' 6"	8' 6"	10' 10"	11' 1"	13' 3"	13' 3"	14' 0"	14' 0"
12" O.C.	SPF HF	#1 / #2	4' 11"	8' 5"	8' 8"	10' 0"	10' 3"	11' 11"	12' 3"	14' 0"	14' 0"	14' 0"	14' 0"
		#3	4' 9"	8' 5"	8' 5"	10' 0"	10' 0"	11' 11"	11' 11"	14' 0"	14' 0"	14' 0"	14' 0"
		STUD	4' 9"	8' 5"	8' 5"	10' 0"	10' 0"	11' 11"	11' 11"	14' 0"	14' 0"	14' 0"	14' 0"
		STANDARD	4' 9"	7' 3"	7' 3"	9' 7"	9' 7"	11' 11"	11' 11"	14' 0"	14' 0"	14' 0"	14' 0"
	SP DFL	#1	5' 4"	8' 5"	9' 1"	10' 0"	10' 9"	11' 11"	12' 10"	14' 0"	14' 0"	14' 0"	14' 0"
		#2	5' 3"	8' 5"	9' 1"	10' 0"	10' 9"	11' 11"	12' 10"	14' 0"	14' 0"	14' 0"	14' 0"
		#3	5' 0"	8' 5"	8' 5"	10' 0"	10' 6"	11' 11"	12' 6"	14' 0"	14' 0"	14' 0"	14' 0"
		STUD	5' 0"	8' 5"	8' 7"	10' 0"	10' 6"	11' 11"	12' 6"	14' 0"	14' 0"	14' 0"	14' 0"
		STANDARD	4' 11"	7' 5"	7' 5"	9' 10"	9' 10"	11' 11"	12' 3"	14' 0"	14' 0"	14' 0"	14' 0"

BRACING GROUP SPECIES AND GRADES:

GROUP A:

SPRUCE-PINE-FIR

#1 / #2	STANDARD
#3	STUD

HEM-FIR

#2	STUD
#3	STANDARD

DOUGLAS FIR-LARCH

#3
STUD
STANDARD

SOUTHERN PINE

#3
STUD
STANDARD

GROUP B:

HEM-FIR

#1 & BTR
#1

SOUTHERN PINE

#1
#2

DOUGLAS FIR-LARCH

#1
#2

GABLE TRUSS DETAIL NOTES:

LIVE LOAD DEFLECTION CRITERIA IS L/240.

PROVIDE UPLIFT CONNECTIONS FOR 80 PLF OVER CONTINUOUS BEARING (5 PSF TC DEAD LOAD).

GABLE END SUPPORTS LOAD FROM 4' 0" OUTLOOKERS WITH 2' 0" OVERHANG, OR 12" PLYWOOD OVERHANG.

ATTACH EACH "L" BRACE WITH 10d NAILS.
* FOR (1) "L" BRACE: SPACE NAILS AT 2" O.C. IN 18" END ZONES AND 4" O.C. BETWEEN ZONES.
** FOR (2) "L" BRACES: SPACE NAILS AT 3" O.C. IN 18" END ZONES AND 6" O.C. BETWEEN ZONES.

"L" BRACING MUST BE A MINIMUM OF 80% OF WEB MEMBER LENGTH.

DIAGONAL BRACE OPTION: VERTICAL LENGTH MAY BE DOUBLED WHEN DIAGONAL BRACE IS USED. CONNECT DIAGONAL BRACE FOR 600# AT EACH END. MAX WEB TOTAL LENGTH IS 14'.

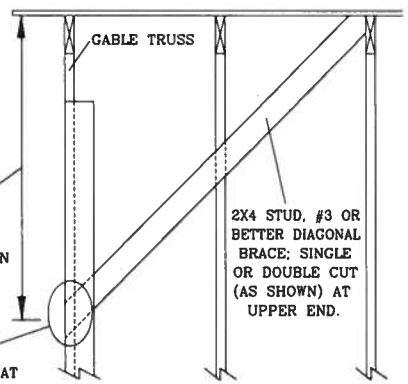

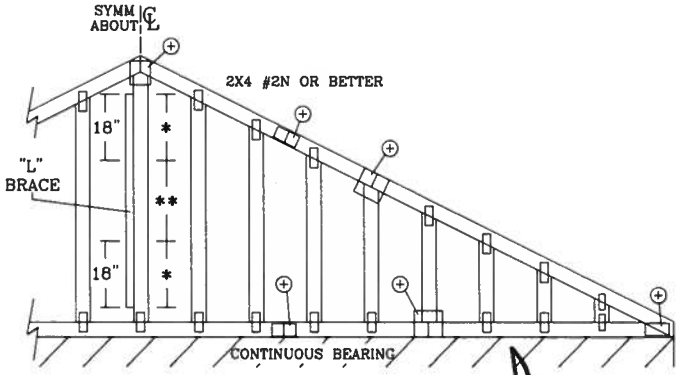

REFER TO CHART ABOVE FOR MAX GABLE VERTICAL LENGTH.

GABLE VERTICAL PLATE SIZES

VERTICAL LENGTH	NO SPLICE
LESS THAN 4' 0"	1X4 OR 2X3
GREATER THAN 4' 0", BUT LESS THAN 11' 6"	2X4
GREATER THAN 11' 6"	2.5X4

\+ REFER TO COMMON TRUSS DESIGN FOR PEAK, SPLICE, AND HEEL PLATES.

ALPINE

ITW BUILDING COMPONENTS GROUP, INC.
POMPANO BEACH, FLORIDA

WARNING TRUSSES REQUIRE EXTREME CARE IN FABRICATING, HANDLING, SHIPPING, INSTALLING AND BRACING. REFER TO BCSI (BUILDING COMPONENT SAFETY INFORMATION), PUBLISHED BY TPI (TRUSS PLATE INSTITUTE, 218 NORTH LEE STR., SUITE 312, ALEXANDRIA, VA. 22314) AND WTCA (WOOD TRUSS COUNCIL OF AMERICA, 6300 ENTERPRISE LN, MADISON, WI 53719) FOR SAFETY PRACTICES PRIOR TO PERFORMING THESE FUNCTIONS. UNLESS OTHERWISE INDICATED, TOP CHORD SHALL HAVE PROPERLY ATTACHED STRUCTURAL PANELS AND BOTTOM CHORD SHALL HAVE A PROPERLY ATTACHED RIGID CEILING.

IMPORTANT FURNISH COPY OF THIS DESIGN TO INSTALLATION CONTRACTOR. ITW BCG, INC., SHALL NOT BE RESPONSIBLE FOR ANY DEVIATION FROM THIS DESIGN; ANY FAILURE TO BUILD THE TRUSS IN CONFORMANCE WITH TPI; OR FABRICATING, HANDLING, SHIPPING, INSTALLING & BRACING OF TRUSSES. DESIGN CONFORMS WITH APPLICABLE PROVISIONS OF NDS (NATIONAL DESIGN SPEC, BY AF&PA) AND TPI. ITW, BCG CONNECTOR PLATES ARE MADE OF 20/18/16GA (W,H/SS/K) ASTM A653 GRADE 40/60 (W,K/H,SS) GALV. STEEL. APPLY PLATES TO EACH FACE OF TRUSS AND, UNLESS OTHERWISE LOCATED ON THIS DESIGN, POSITION PER DRAWINGS 160A-Z. ANY INSPECTION OF PLATES FOLLOWED BY (I) SHALL BE PER ANNEX A3 OF TPI 1-2002 SEC. 3. A SEAL ON THIS DRAWING INDICATES ACCEPTANCE OF PROFESSIONAL ENGINEERING RESPONSIBILITY SOLELY FOR THE TRUSS COMPONENT DESIGN SHOWN. THE SUITABILITY AND USE OF THIS COMPONENT FOR ANY BUILDING IS THE RESPONSIBILITY OF THE BUILDING DESIGNER, PER ANSI/TPI 1 SEC. 2.

JAMES F. COLLINS, JR. LICENSE No. 52212 STATE OF FLORIDA PROFESSIONAL ENGINEER

APR 2 '07

MAX. TOT. LD. 60 PSF

MAX. SPACING 24.0"

REF	ASCE7-02-GAB11015
DATE	2/23/07
DRWG	A11015EE0207
-ENG	

GABLE DETAIL
FOR LET-IN VERTICALS

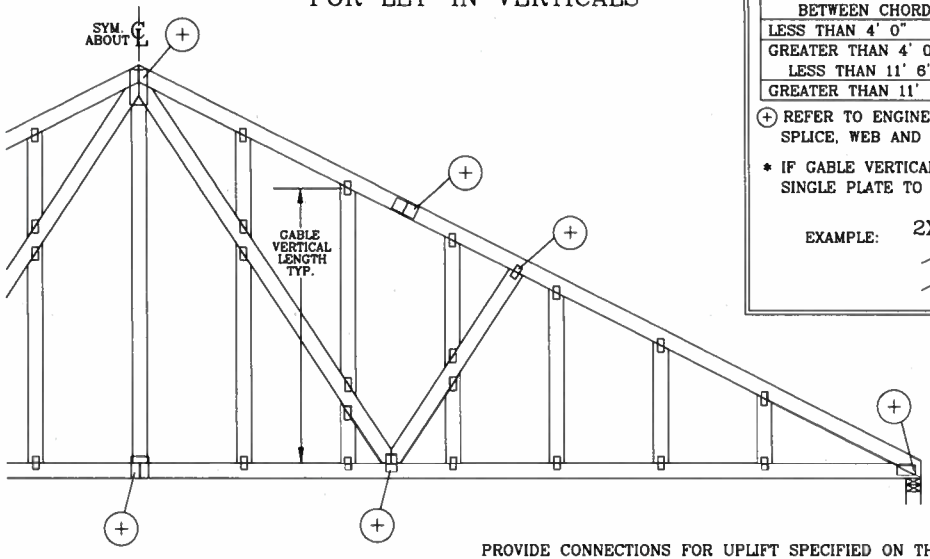

GABLE VERTICAL PLATE SIZES		
VERTICAL LENGTH BETWEEN CHORDS	PLATE SIZE	IF PLATES OVERLAP*
LESS THAN 4' 0"	1X4 OR 2X3	2X8
GREATER THAN 4' 0", BUT LESS THAN 11' 6"	2X4	2X8
GREATER THAN 11' 6"	2.5X4	2.5X8

(+) REFER TO ENGINEERED TRUSS DESIGN FOR PEAK, SPLICE, WEB AND HEEL PLATES.

* IF GABLE VERTICAL PLATES OVERLAP, USE A SINGLE PLATE TO SPAN THE WEB.

EXAMPLE:

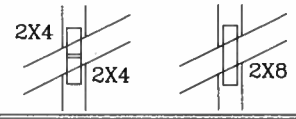

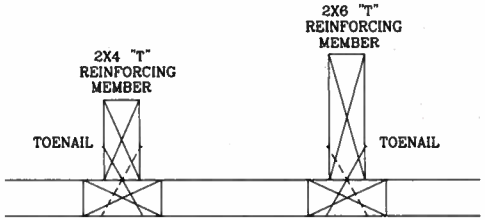

TO CONVERT FROM "L" TO "T" REINFORCING MEMBERS, MULTIPLY "T" FACTOR BY LENGTH (BASED ON GABLE VERTICAL SPECIES, GRADE AND SPACING) FOR (1) 2X4 "L" BRACE, GROUP A, OBTAINED FROM THE APPROPRIATE ALPINE GABLE DETAIL FOR ASCE OR SBCCI WIND LOAD.

MAXIMUM ALLOWABLE "T" REINFORCED GABLE VERTICAL LENGTH IS 14' FROM TOP TO BOTTOM CHORD.

WEB LENGTH INCREASE W/ "T" BRACE

WIND SPEED AND MRH	"T" REINF. MBR. SIZE	SBCCI	ASCE
110 MPH	2x4	10 %	10 %
15 FT	2x6	40 %	50 %
110 MPH	2x4	10 %	10 %
30 FT	2x6	50 %	50 %
100 MPH	2x4	10 %	10 %
15 FT	2x6	30 %	50 %
100 MPH	2x4	10 %	10 %
30 FT	2x6	40 %	40 %
90 MPH	2x4	20 %	10 %
15 FT	2x6	20 %	40 %
90 MPH	2x4	10 %	10 %
30 FT	2x6	30 %	50 %
80 MPH	2x4	10 %	20 %
15 FT	2x6	10 %	30 %
80 MPH	2x4	20 %	10 %
30 FT	2x6	20 %	40 %
70 MPH	2x4	0 %	20 %
15 FT	2x6	0 %	20 %
70 MPH	2x4	10 %	20 %
30 FT	2x6	10 %	30 %

EXAMPLE:
ASCE WIND SPEED = 100 MPH
MEAN ROOF HEIGHT = 30 FT
GABLE VERTICAL = 24" O.C. SP #3
"T" REINFORCING MEMBER SIZE = 2X4
"T" BRACE INCREASE (FROM ABOVE) = 10% = 1.10
(1) 2X4 "L" BRACE LENGTH = 6' 7"
MAXIMUM "T" REINFORCED GABLE VERTICAL LENGTH
1.10 x 6' 7" = 7' 3"

PROVIDE CONNECTIONS FOR UPLIFT SPECIFIED ON THE ENGINEERED TRUSS DESIGN.

ATTACH EACH "T" REINFORCING MEMBER WITH
HAND DRIVEN NAILS:
10d COMMON (0.148"X 3.",MIN) TOENAILS AT 4" O.C. PLUS
(4) 16d COMMON (0.162" X 3.5",MIN) TOENAILS IN TOP AND BOTTOM CHORD.

GUN DRIVEN NAILS:
8d COMMON (0.131"X 2.5",MIN) TOENAILS AT 4" O.C. PLUS
(4) TOENAILS IN TOP AND BOTTOM CHORD.

THIS DETAIL TO BE USED WITH THE APPROPRIATE ALPINE GABLE DETAIL FOR ASCE OR SBCCI WIND LOAD.
ASCE 7-93 GABLE DETAIL DRAWINGS
A11015EN0207, A10015EN0207, A09015EN0207, A08015EN0207, A07015EN0207,
A11030EN0207, A10030EN0207, A09030EN0207, A08030EN0207, A07030EN0207
ASCE 7-98 GABLE DETAIL DRAWINGS
A13015EC0207, A12015EC0207, A11015EC0207, A10015EC0207, A08515EC0207,
A13030EC0207, A12030EC0207, A11030EC0207, A10030EC0207, A08530EC0207
ASCE 7-02 GABLE DETAIL DRAWINGS
A13015EE0207, A12015EE0207, A11015EE0207, A10015EE0207, A08515EE0207,
A13030EE0207, A12030EE0207, A11030EE0207, A10030EE0207, A08530EE0207
ASCE 7-05 GABLE DETAIL DRAWINGS
A13015E50207, A12015E50207, A11015E50207, A10015E50207, A08515E50207,
A13030E50207, A12030E50207, A11030E50207, A10030E50207, A08530E50207

SEE APPROPRIATE ALPINE GABLE DETAIL (ASCE OR SBCCI WIND LOAD) FOR MAXIMUM UNREINFORCED GABLE VERTICAL LENGTH.

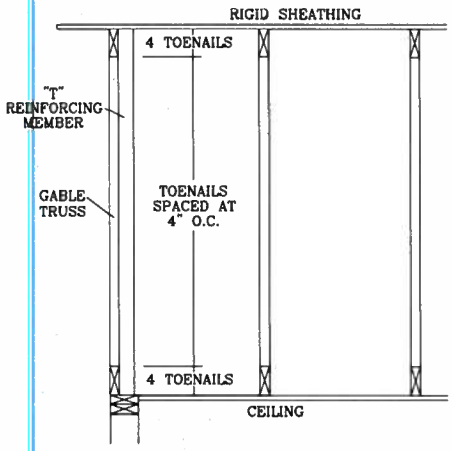

THIS DRAWING REPLACES DRAWINGS GAB98117 876,719 & HC26294035

ALPINE
ITW BUILDING COMPONENTS GROUP, INC.
POMPANO BEACH, FLORIDA

WARNING TRUSSES REQUIRE EXTREME CARE IN FABRICATING, HANDLING, SHIPPING, INSTALLING AND BRACING. REFER TO BCSI (BUILDING COMPONENT SAFETY INFORMATION), PUBLISHED BY TPI (TRUSS PLATE INSTITUTE, 218 NORTH LEE STR., SUITE 312, ALEXANDRIA, VA. 22314) AND WTCA (WOOD TRUSS COUNCIL OF AMERICA, 6300 ENTERPRISE LN, MADISON, WI 53719) FOR SAFETY PRACTICES PRIOR TO PERFORMING THESE FUNCTIONS. UNLESS OTHERWISE INDICATED, TOP CHORD SHALL HAVE PROPERLY ATTACHED STRUCTURAL PANELS AND BOTTOM CHORD SHALL HAVE A PROPERLY ATTACHED RIGID CEILING.

IMPORTANT FURNISH COPY OF THIS DESIGN TO INSTALLATION CONTRACTOR. ITW BCG INC., SHALL NOT BE RESPONSIBLE FOR ANY DEVIATION FROM THIS DESIGN; ANY FAILURE TO BUILD THE TRUSS IN CONFORMANCE WITH TPI; OR FABRICATING, HANDLING, SHIPPING, INSTALLING & BRACING OF TRUSSES. DESIGN CONFORMS WITH APPLICABLE PROVISIONS OF NDS (NATIONAL DESIGN SPEC, BY AF&PA) AND TPI. (TW, BCG CONNECTOR PLATES ARE MADE OF 20/18/16GA (W,H/SS/K) ASTM A653 GRADE 40/60 (W,H/SS) GALV. STEEL. APPLY PLATES TO EACH FACE OF TRUSS AND, UNLESS OTHERWISE LOCATED ON THE DESIGN, POSITION PER DRAWINGS 160A-Z. ANY INSPECTION OF PLATES FOLLOWED BY (I) SHALL BE PER ANNEX A3 OF TPI 1-2002 SEC. 3. A SEAL ON THIS DRAWING INDICATES ACCEPTANCE OF PROFESSIONAL ENGINEERING RESPONSIBILITY SOLELY FOR THE TRUSS COMPONENT DESIGN SHOWN. THE SUITABILITY AND USE OF THIS COMPONENT FOR ANY BUILDING IS THE RESPONSIBILITY OF THE BUILDING DESIGNER, PER ANSI/TPI 1 SEC. 2.

JAMES F. COLLINS, JR. LICENSE No. 52212 STATE OF FLORIDA PROFESSIONAL ENGINEER

MAX TOT. LD. 60 PSF	REF LET-IN VERT
DUR. FAC. ANY	DATE 2/23/07
MAX SPACING 24.0"	DRWG GBLLETIN0207
	-ENG DLJ/KAR

CLB WEB BRACE SUBSTITUTION

THIS DETAIL IS TO BE USED WHEN CONTINUOUS LATERAL BRACING (CLB) IS SPECIFIED ON AN ALPINE TRUSS DESIGN BUT AN ALTERNATIVE WEB BRACING METHOD IS DESIRED.

NOTES:

THIS DETAIL IS ONLY APPLICABLE FOR CHANGING THE SPECIFIED CLB SHOWN ON SINGLE PLY SEALED DESIGNS TO T-BRACING OR SCAB BRACING.

ALTERNATIVE BRACING SPECIFIED IN CHART BELOW MAY BE CONSERVATIVE. FOR MINIMUM ALTERNATIVE BRACING, RE-RUN DESIGN WITH APPROPRIATE BRACING.

WEB MEMBER SIZE	SPECIFIED CLB BRACING	ALTERNATIVE BRACING T OR L-BRACE	ALTERNATIVE BRACING SCAB BRACE
2X3 OR 2X4	1 ROW	2X4	1-2X4
2X3 OR 2X4	2 ROWS	2X6	2-2X4
2X6	1 ROW	2X4	1-2X6
2X6	2 ROWS	2X6	2-2X4(*)
2X8	1 ROW	2X6	1-2X8
2X8	2 ROWS	2X6	2-2X6(*)

T-BRACE, L-BRACE AND SCAB BRACE TO BE SAME SPECIES AND GRADE OR BETTER THAN WEB MEMBER UNLESS SPECIFIED OTHERWISE ON ENGINEER'S SEALED DESIGN.

(*) CENTER SCAB ON WIDE FACE OF WEB. APPLY (1) SCAB TO EACH FACE OF WEB.

T-BRACING OR L-BRACING:

APPLY TO EITHER SIDE OF WEB NARROW FACE.
ATTACH WITH 10d BOX OR GUN (0.128"x 3.",MIN) NAILS.
AT 6" O.C. BRACE IS A MINIMUM 80% OF WEB MEMBER LENGTH

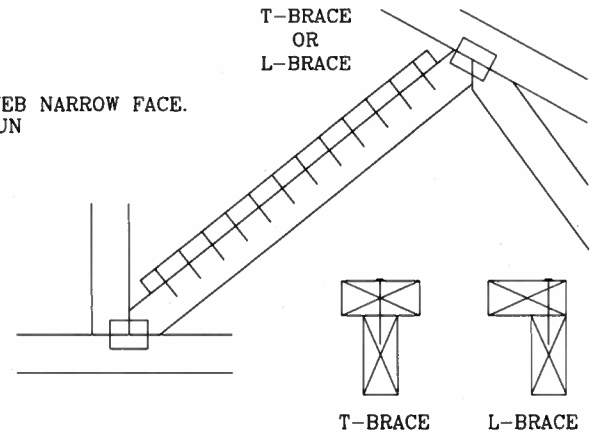

SCAB BRACING:

APPLY SCAB(S) TO WIDE FACE OF WEB.
NO MORE THAN (1) SCAB PER FACE.
ATTACH WITH 10d BOX OR GUN (0.128"x 3.",MIN) NAILS.
AT 6" O.C. BRACE IS A MINIMUM 80% OF WEB MEMBER LENGTH

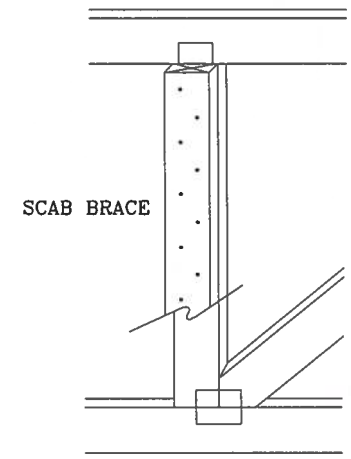

THIS DRAWING REPLACES DRAWING 579,640

ALPINE
ITW BUILDING COMPONENTS GROUP, INC.
POMPANO BEACH, FLORIDA

WARNING TRUSSES REQUIRE EXTREME CARE IN FABRICATING, HANDLING, SHIPPING, INSTALLING AND BRACING. REFER TO BCSI (BUILDING COMPONENT SAFETY INFORMATION), PUBLISHED BY TPI (TRUSS PLATE INSTITUTE, 218 NORTH LEE STR., SUITE 312, ALEXANDRIA, VA. 22314) AND WTCA (WOOD TRUSS COUNCIL OF AMERICA, 6300 ENTERPRISE LN, MADISON, WI 53719) FOR SAFETY PRACTICES PRIOR TO PERFORMING THESE FUNCTIONS. UNLESS OTHERWISE INDICATED, TOP CHORD SHALL HAVE PROPERLY ATTACHED STRUCTURAL PANELS AND BOTTOM CHORD SHALL HAVE A PROPERLY ATTACHED RIGID CEILING.

IMPORTANT FURNISH COPY OF THIS DESIGN TO INSTALLATION CONTRACTOR. ITW BCG, INC. SHALL NOT BE RESPONSIBLE FOR ANY DEVIATION FROM THIS DESIGN; ANY FAILURE TO BUILD THE TRUSS IN CONFORMANCE WITH TPI; OR FABRICATING, HANDLING, SHIPPING, INSTALLING & BRACING OF TRUSSES. DESIGN CONFORMS WITH APPLICABLE PROVISIONS OF NDS (NATIONAL DESIGN SPEC, BY AF&PA) AND TPI. ITW, BCG CONNECTOR PLATES ARE MADE OF 20/18/16GA (W,H/SS/K) ASTM A653 GRADE 40/60 (W,K/HSS) GALV. STEEL. APPLY PLATES TO EACH FACE OF TRUSS AND, UNLESS OTHERWISE LOCATED ON THIS DESIGN, POSITION PER DRAWINGS 160A-Z. ANY INSPECTION OF PLATES FOLLOWED BY (I) SHALL BE PER ANNEX A3 OF TPI 1-2002 SEC. 3. A SEAL ON THIS DRAWING INDICATES ACCEPTANCE OF PROFESSIONAL ENGINEERING RESPONSIBILITY SOLELY FOR THE TRUSS COMPONENT DESIGN SHOWN. THE SUITABILITY AND USE OF THIS COMPONENT FOR ANY BUILDING IS THE RESPONSIBILITY OF THE BUILDING DESIGNER, PER ANSI/TPI 1 SEC. 2.

JAMES F. COLLINS, JR. LICENSE No. 52212 STATE OF FLORIDA PROFESSIONAL ENGINEER

TC LL	PSF	REF CLB SUBST.
TC DL	PSF	DATE 2/23/07
BC DL	PSF	DRWG BRCLBSUB0207
BC LL	PSF	-ENG MLH/KAR
TOT. LD.	PSF	
DUR. FAC.		
SPACING		

VALLEY TRUSS DETAIL

TOP CHORD 2X4 SP #2 OR SPF #1/#2 OR BETTER.
BOT CHORD 2X3(*) OR 2X4 SP #2N OR SPF #1/#2 OR BETTER.
WEBS 2X4 SP #3 OR BETTER.

* 2X3 MAY BE RIPPED FROM A 2X6 (PITCHED OR SQUARE).

** ATTACH EACH VALLEY TO EVERY SUPPORTING TRUSS WITH: (2) 16d BOX (0.135" X 3.5") NAILS TOE-NAILED FOR SBC 110 MPH, ASCE 7-93 110 MPH OR ASCE 7-98, ASCE 7-02 OR ASCE 7-05 130 MPH. 15' MEAN HEIGHT, ENCLOSED BUILDING, EXP. C, RESIDENTIAL, WIND TC DL=5 PSF.

UNLESS SPECIFIED ON ENGINEER'S SEALED DESIGN, APPLY 1X4 "T"-BRACE, 80% LENGTH OF WEB, VALLEY WEB, SAME SPECIES AND GRADE OR BETTER, ATTACHED WITH 8d BOX (0.113" X 2.5") NAILS AT 6" OC, OR CONTINUOUS LATERAL BRACING, EQUALLY SPACED, FOR VERTICAL VALLEY WEBS GREATER THAN 7'9".

MAXIMUM VALLEY VERTICAL HEIGHT MAY NOT EXCEED 12'0".

TOP CHORD OF TRUSS BENEATH VALLEY SET MUST BE BRACED WITH:
PROPERLY ATTACHED, RATED SHEATHING APPLIED PRIOR TO VALLEY TRUSS INSTALLATION
OR
PURLINS AT 24" OC OR AS OTHERWISE SPECIFIED ON ENGINEERS' SEALED DESIGN
OR
BY VALLEY TRUSSES USED IN LIEU OF PURLIN SPACING AS SPECIFIED ON ENGINEERS' SEALED DESIGN.

*** NOTE THAT THE PURLIN SPACING FOR BRACING THE TOP CHORD OF THE TRUSS BENEATH THE VALLEY IS MEASURED ALONG THE SLOPE OF THE TOP CHORD.

++ LARGER SPANS MAY BE BUILT AS LONG AS THE VERTICAL HEIGHT DOES NOT EXCEED 12'0".

BOTTOM CHORD MAY BE SQUARE OR PITCHED CUT AS SHOWN.

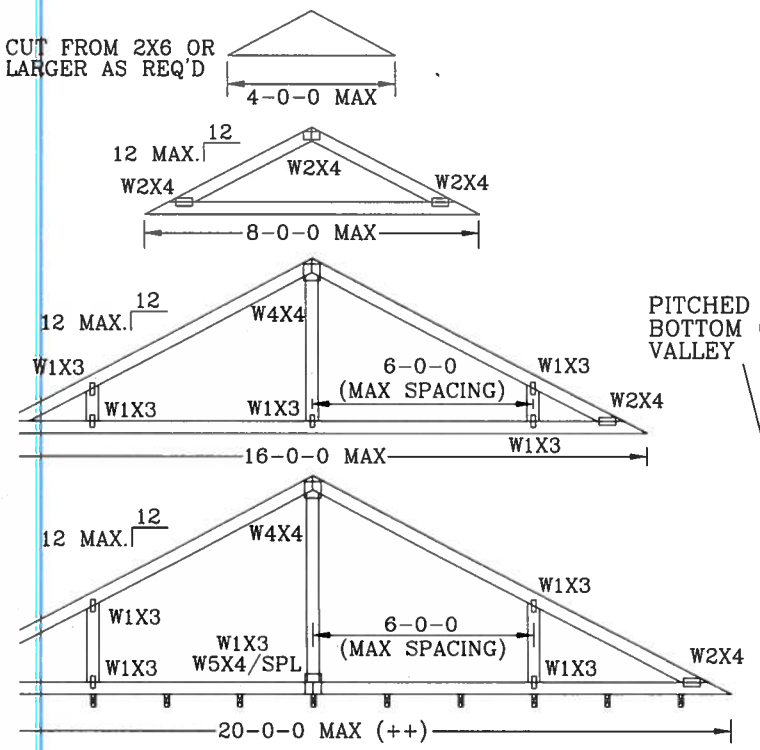

SUPPORTING TRUSSES AT 24" OC MAXIMUM SPACING.

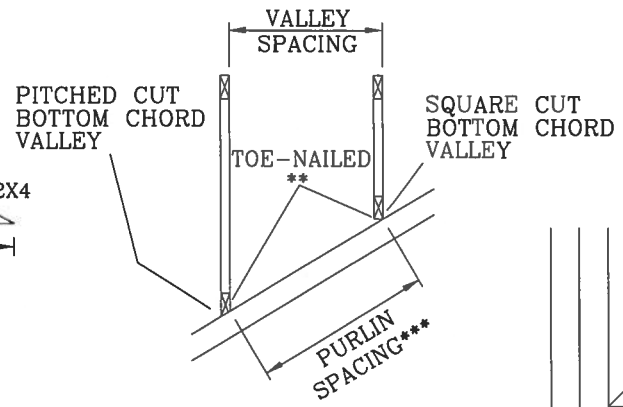

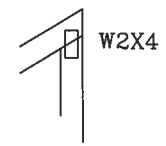

OPTIONAL STUB END DETAIL

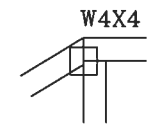

OPTIONAL HIP JOINT DETAIL

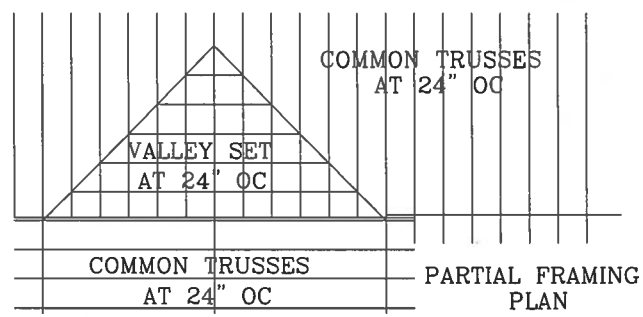

PARTIAL FRAMING PLAN

THIS DRAWING REPLACES DRAWING A105

ALPINE
ITW BUILDING COMPONENTS GROUP, INC.
POMPANO BEACH, FLORIDA

WARNING TRUSSES REQUIRE EXTREME CARE IN FABRICATING, HANDLING, SHIPPING, INSTALLING AND BRACING. REFER TO BCSI (BUILDING COMPONENT SAFETY INFORMATION), PUBLISHED BY TPI (TRUSS PLATE INSTITUTE, 218 NORTH LEE STR., SUITE 312, ALEXANDRIA, VA. 22314) AND WTCA (WOOD TRUSS COUNCIL OF AMERICA, 6300 ENTERPRISE LN, MADISON, WI 53719) FOR SAFETY PRACTICES PRIOR TO PERFORMING THESE FUNCTIONS. UNLESS OTHERWISE INDICATED, TOP CHORD SHALL HAVE PROPERLY ATTACHED STRUCTURAL PANELS AND BOTTOM CHORD SHALL HAVE A PROPERLY ATTACHED RIGID CEILING.

IMPORTANT FURNISH COPY OF THIS DESIGN TO INSTALLATION CONTRACTOR. ITW BCG, INC., SHALL NOT BE RESPONSIBLE FOR ANY DEVIATION FROM THIS DESIGN; ANY FAILURE TO BUILD THE TRUSS IN CONFORMANCE WITH TPI; OR FABRICATING, HANDLING, SHIPPING, INSTALLING & BRACING OF TRUSSES. DESIGN CONFORMS WITH APPLICABLE PROVISIONS OF NDS (NATIONAL DESIGN SPEC, BY AF&PA) AND TPI. (ITW, BCG CONNECTOR PLATES ARE MADE OF 20/18/16GA (W,H/SS/K) ASTM A653 GRADE 40/60 (W,K/H,SS) GALV. STEEL. APPLY PLATES TO EACH FACE OF TRUSS AND, UNLESS OTHERWISE LOCATED ON THIS DESIGN, POSITION PER DRAWINGS 160A-Z. ANY INSPECTION OF PLATES FOLLOWED BY (I) SHALL BE PER ANNEX A3 OF TPI 1-2002 SEC. 3. A SEAL ON THIS DRAWING INDICATES ACCEPTANCE OF PROFESSIONAL ENGINEERING RESPONSIBILITY SOLELY FOR THE TRUSS COMPONENT DESIGN SHOWN. THE SUITABILITY AND USE OF THIS COMPONENT FOR ANY BUILDING IS THE RESPONSIBILITY OF THE BUILDING DESIGNER, PER ANSI/TPI 1 SEC. 2.

JAMES P. COLLINS JR. LICENSE No. 52212 STATE OF FLORIDA PROFESSIONAL ENGINEER

TC LL	30	30	40 PSF	
TC DL	20	15	7 PSF	
BC DL	10	10	10 PSF	
BC LL	0	0	0 PSF	
TOT. LD.	60	55	57 PSF	
DUR.FAC.	1.25/1.33	1.15	1.15	
SPACING		24"		

REF	VALLEY DETAIL
DATE	2/23/07
DRWG	VALTRUSS0207
-ENG	MLH/KAR

Permit # 26141

WILLIAM N. KITCHEN

PROFESSIONAL SURVEYOR AND MAPPER
152 N. MARION AVENUE
LAKE CITY, FLORIDA 32055
PHONE (386) 755-7786 FAX (386) 755-5506
E-MAIL BSSK@BELLSOUTH.NET

DATE : 9/10/2007

To Whom It May Concern:

RE: COMPASS BUILDERS
LOT 20 COLUMBIA CITY HOMESITES, UNIT 1

SUBJECT PARCEL # 15-5S-16-03626-320

SUBJECT PROPERTY IS IN FLOOD ZONE "A" ACCORDING TO FEMA FLOOD INSURANCE RATE MAP NO. 120070 0255 B DATED JANUARY 6, 1988. AND THE TOP OF FINISH STEM WALLS ASBUILT ARE AT ELEVATION 56.0 PER ENGINEER CURTIS KEEN. WHICH IS ALSO 1 FOOT ABOVE THE ADJACENT ROADWAY, STATE ROAD NO. 47.

Thank you,
WILLIAM N. KITCHEN PSM # 5490

William N. Kitchen
9-10-2007

26141

12.00
2.50
12.50

Return To:
Eddie Anderson

344.4817

THIS INSTRUMENT PREPARED BY
& RETURN TO:
Columbia Bank
173 NW Hillsboro Street
Lake City, FL 32055

Inst:2007011613 Date:05/24/2007 Time:11:32
DC,P.DeWitt Cason,Columbia County B:1120 P:333

NOTICE OF COMMENCEMENT

THE UNDERSIGNED hereby gives notice that improvement will be made to certain real property, and in accordance with Chapter 713, Florida Statutes, the following information is provided in this Notice of Commencement:

1. Description of Property: Lot 20 Columbia City Homesites Unit 1 according to the Tax Parcel # 15-5S-16-03626-320 of the Public Records of Columbia County, Florida.

2. General Description of Improvements: Construction of a single family dwelling.

3. Owner Information: Compass Builders and Associates Corp
197 SW Waterford Court Suite 105
Lake City, Fl 32025
Phone: 386-755-2082

Owner's Interest in Property: Fee Simple

4. Contractor: Compass Builders and Associates Corp
197 SW Waterford Court Suite 105
Lake City, Fl 32025
Phone: 386-755-2082

5. Lender: Columbia Bank
173 NW Hillsboro Street
Lake City, FL 32055

6. Additional persons within the State of Florida designated by Owner upon whom notices or other documents may be served as provided by Section 713.13(1)(a)7., Florida Statutes:

7. Expiration date of Notice of Commencement is one (1) year from the date of recording.

Compass Builders and Associates Corp

Joshua A. Nickelson, President

Jacob C. Kirsch, Vice President

STATE OF FLORIDA
COUNTY OF Columbia

The foregoing instrument was acknowledged before me this 21st day of May, 2007 by Joshua A. Nickelson and Jacob C. Kirsch

NOTARY PUBLIC

Name:
State of Florida at Large (SEAL)
Personally Known:
Produced Identification:
Type:
My Commission Expires:

JANICE ELAINE GONZALEZ
MY COMMISSION # DD 599192
EXPIRES: April 11, 2010
Bonded Thru Notary Public Underwriters

(NOC)

CERTIFICATE OF

OCCUPANCY

COLUMBIA COUNTY, FLORIDA

Department of Building and Zoning Inspection

This Certificate of Occupancy is issued to the below named permit holder for the building and premises at the below named location, and certifies that the work has been completed in accordance with the Columbia County Building Code.

Parcel Number 15-5S-16-03626-320 **Building permit No.** 000026141

Use Classification SFD,UTILITY **Fire:** 44.94

Permit Holder JACOB KIRSCH **Waste:** 117.25

Owner of Building COMPASS BUILDERS **Total:** 162.19

Location: 8998 SW SR 47, LAKE CITY, FL

Date: 03/27/2008

Wayne A. Russ

Building Inspector

POST IN A CONSPICUOUS PLACE
(Business Places Only)

26141

FAX MEMORANDUM

MEMORANDUM

FLORIDA DEPARTMENT OF TRANSPORTATION

To: Mr. John Kerce, Dept. Director Columbia Co. Building & Zoning Dept. **Fax No: 386-758-2160**	**From:** Dale L. Cray, FDOT Permits Insp. **Date: 3-19-2008** Fax **No. 386-961-7183** **Attention: Col Co. Building Zoning Dept.**

( ) Sign and return. ( ) For your files. ( ) Please call me. (XX) FYI ( ) For Review

REF: New Res. D/W / Inspected On:3-19-2008
PROJECT: New Access / Res. Access S.R. 47
PARCEL ID No:RO3626-320 N/A Permit No : 07-A-292-34 Sec No : 29020
MILE POST: 13.864+-

Mr. Kerce:

Please accept this as our legal notice of final passing inspection for (JACOB KIRSUH/ COMBASS BUILDER & ASS.CORP.) for a New Comm. Driveway. The project is located, SR. 47 S Lake City, Fl.

This access is for the New Res. Access has been inspected and meets FDOT Standard Requirements.

If further information is required on this project please do not hesitate to contact this office for additional access permitting information details. My office number is 961-7193 or 961-7146.

Sincerely,

Dale L. Cray DLC
Access Permits Inspector

STATE OF FLORIDA DEPARTMENT OF TRANSPORTATION

DRIVEWAY CONNECTION PERMIT FOR ALL CATEGORIES

850-040-18
SYSTEMS PLANNING - 06/06
Page 1 of 3

PART 1: PERMIT INFORMATION

APPLICATION NUMBER: 2007-A-292-34

Permit Category: A Access Classification: 4

Project: RES- DRIVEWAY

Permittee: COMPASS BUILDERS & ASS. CORP. A FL. CORP. / JACOB KIRSUH (REP)

Section/Mile Post: 29020 / 13.864+- State Road: 47

Section/Mile Post: N/A State Road: N/A

PART 2: PERMITTEE INFORMATION

Permittee Name: COMPASS BUILDERS & ASS. A FL. CORP. / JACOB KIRSUH (REP)

Permittee Mailing Address: 197 SW WATERFORD STE. 106

City, State, Zip: LAKE CITY, FL.32025

Telephone: (386)755-2082

Engineer/Consultant/or Project Manager: N/A

Engineer responsible for construction inspection: N/A
NAME P.E. #

Mailing Address: N/A

City, State, Zip: N/A

Telephone: N/A Mobile Phone N/A

PART 3: PERMIT APPROVAL

The above application has been reviewed and is hereby approved subject to all Provisions as attached.

Permit Number: 2007-A-292-34

Department of Transportation

Signature: Title: PERMITS COORDINATOR

Department Representative's Printed Name NEIL E. MILES

Temporary Permit ○ YES ◉ NO (If temporary, this permit is only valid for 6 months)

Special provisions attached ◉ YES ○ NO

Date of Issuance: JUN 13 2007

If this is a normal (non-temporary) permit it authorizes construction for one year from the date of issuance. This can only be extended by the Department as specified in 14-96.007(6).

See following pages for General and Special Provisions

STATE OF FLORIDA DEPARTMENT OF TRANSPORTATION

DRIVEWAY/CONNECTION APPLICATION
CATEGORY A

(INDIVIDUAL HOMES, DUPLEXES OR OTHER USES LESS THAN 20 TRIPS/DAY TOTAL)

650-040-14
SYSTEMS PLANNING
09/02

OFFICE USE ONLY

Application Number: 07-A-292-34

Category: A

Section Road Number & Mile Post: 29020/ 13.864+-

Accepted By DALE L. CRAY
FDOT STAFF (TYPE OR PRINT)

Date: 6-11-2007

APPLICANT COMPLETE REMAINDER OF FORM

PART I: APPLICANT INFORMATION (Please type or print)

APPLICANT: Jacob Kirsch, Compass Builders

Mailing Address: 147 SW Waterford ct. #106

City, State, Zip: Lake City, FL 32025

Telephone: 386-344-4817, 386-755-2082

Physical Address of Site (if different):

Attach Map & Drawing If Necessary

PROPERTY OWNER: (if different from above) COMPASS BUILDERS & ASS. CORP. A FL.CORP.

Mailing Address:

City, State, Zip:

Telephone:

PART 2: NOTICE TO APPLICANT

Proposed traffic control features and devices in the right of way, such as median openings and other traffic control devices, are not part of the connection(s) to be authorized by a connection permit. The Department reserves the right to change these features in the future in order to promote safety in the right of way or efficient traffic operations on the highway. Expenditure by the applicant of monies for installation or maintenance of such features shall not create any interest in the features or their maintenance.

PART 3: CERTIFICATION AND SIGNATURE

I certify that I am familiar with the information contained in this application and that to the best of my knowledge and belief such information is true, complete and accurate. I will not begin work on the connection until I receive my Permit and I understand all the conditions of the Permit. When I begin work on the connection I am accepting all conditions listed in my Permit.

Signed: [signature] (Applicant)

Date: 6/11/07

Printed Name: Jacob Kirsch

Prepared by & Return to:
Matthew D. Rocco
Ira Title, LLC
619 SW Baya Drive, Suite 102
Lake City, Florida 32025

File Number: 07-0079

Inst:2007006319 Date:03/19/2007 Time:12:57
Doc Stamp-Deed : 245.00
DC,P.DeWitt Cason,Columbia County B:1114 P:58

General Warranty Deed

Made this March 16th, 2007 A.D. By **Nathan W. Griffis, a married man**, 144 SW Thrasher Lane, Lake City, FL 32024, hereinafter called the grantor, to **Compass Builders & Associates Corp., a Florida corporation**, whose post office address is: 197 SW Waterford Court, Ste 105, Lake City, FL 32025, hereinafter called the grantee:

(Whenever used herein the term "grantor" and "grantee" include all the parties to this instrument and the heirs, legal representatives and assigns of individuals, and the successors and assigns of corporations)

Witnesseth, that the grantor, for and in consideration of the sum of Ten Dollars, ($10.00) and other valuable considerations, receipt whereof is hereby acknowledged, hereby grants, bargains, sells, aliens, remises, releases, conveys and confirms unto the grantee, all that certain land situate in Columbia County, Florida, viz:

Lots 20 and 22, COLUMBIA CITY HOMESITES, UNIT 1, according to the plat thereof, as recorded in Plat Book 5, Page 106, of the Public Records of Columbia County, Florida.

Said property is not the homestead of the Grantor(s) under the laws and constitution of the State of Florida in that neither Grantor(s) or any members of the household of Grantor(s) reside thereon.

Parcel ID Number: R03626-320 and R03626-322

Together with all the tenements, hereditaments and appurtenances thereto belonging or in anywise appertaining.

To Have and to Hold, the same in fee simple forever.

And the grantor hereby covenants with said grantee that the grantor is lawfully seized of said land in fee simple; that the grantor has good right and lawful authority to sell and convey said land; that the grantor hereby fully warrants the title to said land and will defend the same against the lawful claims of all persons whomsoever; and that said land is free of all encumbrances except taxes accruing subsequent to December 31, 2006.

In Witness Whereof, the said grantor has signed and sealed these presents the day and year first above written.

Signed, seealed and delivered in our presence:

Witness Printed Name Matthew D. Rocco

Witness Printed Name Lisa Kraus

Nathan W. Griffis (Seal)
Nathan W. Griffis
Address: 144 SW Thrasher Lane, Lake City, FL 32024

(Seal)
Address:

State of Florida
County of Columbia

The foregoing instrument was acknowledged before me this 16th day of March, 2007, by Nathan W. Griffis, who is/are personally known to me or who has produced a FL Drivers License as identification.

Notary Public State of Florida
Matthew Rocco
My Commission DD578349
Expires 09/17/2010

Notary Public
Print Name:
My Commission Expires:

Florida Department of Transportation

OVERNIGHT ADDRESS
710 NW LAKE JEFFERY
SUITE 101, LAKE CITY, FL.
32055-2621

CHARLIE CRIST
GOVERNOR

STEPHANIE KOPELOUSOS
INTERIM SECRETARY

STATEMENT OF CONTIGUOUS INTEREST

PROJECT NAME: JACOD KIRSUH' COMPASS BUILDERS & ASS. CORP.

PROJECT LOCATION, (PHY./911ADDRESS): 197 SW WATERFORD CT. STE. 106L.CITY. FL.32025

STATE HIGHWAY: 47 **STATE RD. SECTION** 29020

COUNTY NAME: COL. **STATE MILE POST:** 13.864+-
COUNTY PROPERTY I.D NUMBER REQUIRED: R03626-320
PROPT. OWNER'S NAME (Person or company): COMPASS BUILDERS & ASS.CORP.

OWNER'S MAILING ADDRESS: 197 sw WATERFORD CT. STE.106 LAKE CITY, FL.32025

PERMITTEE'S P.E. COMPANY: N/A
CONTACT P. E. NAME: N/A

ENGINEER'S ADDRESS: N/A

PERMITTEE'S LEGAL REPRESENTATIVE: JACOB KIRSUH

I hereby certify that the total contiguous property owned or controlled is as shown on the officially submitted project's construction Plan and more fully by legal description and attached hereto as exhibit "A".

SIGNED: [signature] **DATE:** 6/11/07

NAME/TITLE: Jacob Kirsch, VP.
ADDRESS: SAME AS ABOVE

COMMENTS:

Finish Floor Elevation to be at 56.0 ft. Elevation Confirmation letter Required.

County Engineer Suggest South end of lot be excavated to compensate for fill material placed on lot.