DATE 04/25/2007

Columbia County Building Permit

This Permit Expires One Year From the Date of Issue

PERMIT
000025751

APPLICANT KIMMY EDGLEY PHONE 752-0580

ADDRESS 590 SW ARLIGTON BLVD SIUTE 113 LAKE CITY FL 32025

OWNER SHANE RUSSELL PHONE 752-0580

ADDRESS 128 SW INWOOD COURT LAKE CITY FL 32025

CONTRACTOR EDGLEY CONSTRUCTION PHONE 752-0580

LOCATION OF PROPERTY 90 WEST, L 341, R ITO CREEK SIDE, R INWOOD CT, 2ND ON LEFT

TYPE DEVELOPMENT SFD,UTILITY ESTIMATED COST OF CONSTRUCTION 92800.00

HEATED FLOOR AREA 1856.00 TOTAL AREA 2749.00 HEIGHT 19.10 STORIES 1

FOUNDATION CONCRETE WALLS FRAMED ROOF PITCH 6/12 FLOOR SLAB

LAND USE & ZONING RSF-2 MAX. HEIGHT 35

Minimum Set Back Requirments: STREET-FRONT 25.00 REAR 15.00 SIDE 10.00

NO. EX.D.U. 0 FLOOD ZONE XPP DEVELOPMENT PERMIT NO.

PARCEL ID 12-4S-16-02939-129 SUBDIVISION CREEKSIDE

LOT 29 BLOCK PHASE UNIT TOTAL ACRES 0.57

000001373		RR28281136	Kimmy Edgley	
Culvert Permit No.	Culvert Waiver	Contractor's License Number	Applicant/Owner/Contractor	
PERMIT	07-306	BK	JH	N
Driveway Connection	Septic Tank Number	LU & Zoning checked by	Approved for Issuance	New Resident

COMMENTS: FLOOR ONE FOOT ABOVE THE ROAD, NOC ON FILE

Check # or Cash 2557

FOR BUILDING & ZONING DEPARTMENT ONLY

(footer/Slab)

Temporary Power _____ date/app. by Foundation _____ date/app. by Monolithic _____ date/app. by

Under slab rough-in plumbing _____ date/app. by Slab _____ date/app. by Sheathing/Nailing _____ date/app. by

Framing _____ date/app. by Rough-in plumbing above slab and below wood floor _____ date/app. by

Electrical rough-in _____ date/app. by Heat & Air Duct _____ date/app. by Peri. beam (Lintel) _____ date/app. by

Permanent power _____ date/app. by C.O. Final _____ date/app. by Culvert _____ date/app. by

M/H tie downs, blocking, electricity and plumbing _____ date/app. by Pool _____ date/app. by

Reconnection _____ date/app. by Pump pole _____ date/app. by Utility Pole _____ date/app. by

M/H Pole _____ date/app. by Travel Trailer _____ date/app. by Re-roof _____ date/app. by

BUILDING PERMIT FEE $ 465.00 CERTIFICATION FEE $ 13.75 SURCHARGE FEE $ 13.75

MISC. FEES $ 0.00 ZONING CERT. FEE $ 50.00 FIRE FEE $ 0.00 WASTE FEE $

FLOOD DEVELOPMENT FEE $ FLOOD ZONE FEE $ 25.00 CULVERT FEE $ 25.00 **TOTAL FEE** 592.50

INSPECTORS OFFICE L. H. CLERKS OFFICE CH

NOTICE: IN ADDITION TO THE REQUIREMENTS OF THIS PERMIT, THERE MAY BE ADDITIONAL RESTRICTIONS APPLICABLE TO THIS PROPERTY THAT MAY BE FOUND IN THE PUBLIC RECORDS OF THIS COUNTY, AND THERE MAY BE ADDITIONAL PERMITS REQUIRED FROM OTHER GOVERNMENTAL ENTITIES SUCH AS WATER MANAGEMENT DISTRICTS, STATE AGENCIES, OR FEDERAL AGENCIES.

"WARNING TO OWNER: YOUR FAILURE TO RECORD A NOTICE OF COMMENCEMENT MAY RESULT IN YOUR PAYING TWICE FOR IMPROVEMENTS TO YOUR PROPERTY. IF YOU INTEND TO OBTAIN FINANCING, CONSULT WITH YOUR LENDER OR AN ATTORNEY BEFORE RECORDING YOUR NOTICE OF COMMENCEMENT."

This Permit Must Be Prominently Posted on Premises During Construction

PLEASE NOTIFY THE COLUMBIA COUNTY BUILDING DEPARTMENT AT LEAST 24 HOURS IN ADVANCE OF EACH INSPECTION, IN ORDER THAT IT MAY BE MADE WITHOUT DELAY OR INCONVIENCE, PHONE 758-1008. THIS PERMIT IS NOT VALID UNLESS THE WORK AUTHORIZED BY IT IS COMMENCED WITHIN 6 MONTHS AFTER ISSUANCE.

The Issuance of this Permit Does Not Waive Compliance by Permittee with Deed Restrictions.

. vices

. ate Warranty Deed

This Indenture, made , April 19, 2007 A.D.
Between

Cee Bas Inc. whose post office address is: 590 SW Arlington Blvd. Suite 105, Lake City, Florida 32025 a corporation existing under the laws of the State of Florida , Grantor and

Shane R. Russell whose post office address is: 128 SW Inwood Court, Lake City, Florida 32025, Grantee,

Witnesseth, that the said Grantor, for and in consideration of the sum of Ten and No/100 Dollars ($10.00), to it in hand paid by the said Grantee, the receipt whereof is hereby acknowledged, has granted, bargained and sold to the said Grantee forever, the following described land, situate, lying and being in the County of Columbia, State of Florida, to wit:

Lot 29, of Creekside, according to the Plat thereof, as recorded in Plat Book 7, at Page 124 through 125, of the Public Records of Columbia County, Florida

Subject to taxes for the current year, covenants, restrictions and easements of record, if any.

Parcel Identification Number: **02939-129**

And the said Grantor does hereby fully warrant the title to said land, and will defend the same against the lawful claims of all persons whomsoever.

In Witness Whereof, the said Grantor has caused this instrument to be executed in its name by its duly authorized officer and caused its corporate seal to be affixed the day and year first above written.

Cee Bas Inc.

Signed and Sealed in Our Presence:

Elaine R. Davis
Witness Print Name: ELAINE R. DAVIS

Megan M. Marabh
Witness Print Name: Megan Marabh

By: Douglas E. Edgley
Douglas E. Edgley
Its: President

(Corporate Seal)

tate of Florida
ounty of Columbia

he foregoing instrument was acknowledged before me this 19th day of April, 2007, by Douglas E. Edgley, the President of Cee Bas ıc. A corporation existing under the laws of the State of Florida , on behalf of the corporation.He is personally known to me or has oduced Known as identification.

Elaine R. Davis (Seal)
Notary Public ELAINE R. DAVIS
Notary Printed Name:

My Commission Expires:

ELAINE R. DAVIS
Notary Public - State of Florida
My Commission Expires Oct 14, 2007
Commission # DD 223411
Bonded By National Notary Assn.

epared by:
aine R. Davis, an employee of
nerican Title Services of Lake City, Inc.,
1 SW Main Blvd., Suite 105
ke City, Florida 32025

e Number: 07-181

ELK Roofing Products Specifications – Tuscaloosa, AL

PRESTIQUE®
HIGH DEFINITION®

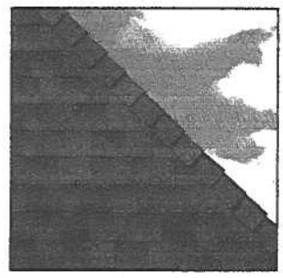

RAISED PROFILE®

Prestique Plus *High Definition* and Prestique Gallery Collection™

Product size	13¼"x 39⅜"
Exposure	5⅝"
Pieces/Bundle	16
Bundles/Square	4/98.5 sq.ft.
Squares/Pallet	11

50-year limited warranty period: 5-7**years non-prorated coverage for shingles and application labor with prorated coverage for remainder of limited warranty period, plus an option for transferability*. 5-year limited wind warranty*. Wind Coverage: standard 80 mph, extended 110 mph***

Raised Profile

Product size	13¼"x 38¾"
Exposure	5⅝"
Pieces/Bundle	22
Bundles/Square	3/100 sq.ft.
Squares/Pallet	16

30-year limited warranty period: 5-7**years non-prorated coverage for shingles and application labor with prorated coverage for remainder of limited warranty period, plus an option for transferability*. 5-year limited wind warranty*. Wind Coverage: standard 70 mph.

Prestique I *High Definition*

Product size	13¼"x 39⅜"
Exposure	5⅝"
Pieces/Bundle	16
Bundles/Square	4/98.5 sq.ft.
Squares/Pallet	14

40-year limited warranty period: 5-7**years non-prorated coverage for shingles and application labor with prorated coverage for remainder of limited warranty period, plus an option for transferability*. 5-year limited wind warranty*. Wind Coverage: standard 80 mph, extended 90 mph***

HIP AND RIDGE SHINGLES

Seal-A-Ridge® w/*FLX*™

Size: 12"x 12"
Exposure: 6½"
Pieces/Bundle: 45
Coverage: 4 Bundles = 100 linear feet

Vented RidgeCrest™ w/*FLX*™

Size: 13"x13¼"
Exposure: 9¼"
Pieces/Box: 26
Coverage: 5 boxes = 100 linear feet

Prestique *High Definition*

Product size	13¼"x 38¾"
Exposure	5⅝"
Pieces/Bundle	22
Bundles/Square	3/100 sq.ft.
Squares/Pallet	16

30-year limited warranty period: 5-7**years non-prorated coverage for shingles and application labor with prorated coverage for remainder of limited warranty period, plus an option for transferability*. 5-year limited wind warranty*. Wind Coverage: standard 80 mph.

Elk Starter Strip

52 Bundles/Pallet
18 Pallets/Truck
936 Bundles/Truck
19 Pieces/Bundle
1 Bundle = 120.33 linear feet

Available Colors (Check Availability): Antique Slate, Weatheredwood, Shakewood, Sablewood, Hickory, Barkwood, Forest Green, Wedgewood, Birchwood, Sandalwood.
Gallery Collection: Balsam Forest™, Weathered Sage™, Sienna Sunset™.

All Prestique, Raised Profile and Seal-A-Ridge, and Prestique Starter Strip roofing products contain sealant which activates with the sun's heat, bonding shingles into a wind and weather resistant cover that resists blow-offs and leaks.

Check for availability with built-in StainGuard® treatment to inhibit the discoloration of roofing granules caused by the growth of certain types of algae.

All Prestique and Raised Profile shingles meet UL® Wind Resistant (UL 997) and Class "A" Fire Ratings (UL 790); and ASTM Specifications D 3018, Type-I; D 3161, Type-I; E 108 and the requirements of ASTM D 3462.

All Prestique and Raised Profile shingles have approval from the Florida Building Code Commission, Metro-Dade County, ICBO, and Texas Department of Insurance.

*See actual limited warranty for conditions and limitations.
** Effective January 1, 2004, the seven year non-prorated Umbrella Coverage Period applies only when a full Elk Roof System is installed with the original installation of the Elk shingles, all in accordance with Elk's application instructions for such products. A full Elk roof system includes Elk Hip and Ridge shingles on all hips and ridges, Elk Starter Strip along all rake and eave edges, an Elk ventilation system, and Elk All-Climate Self-Adhering Underlayment in all valleys. Additionally, Elk All-Climate Self-Adhering Underlayment is required along the rake and eave edges of the roof in and north of the states of VA, KY, MO, KS, CO, UT, NV, & OR
***For a limited Wind Warranty up to 110 mph for Prestique Gallery Collection, Prestique Plus, or 90 mph for Prestique I or Grandé, at least six (6) properly placed NAILS and Elk Starter Strip shingles are required. See application instructions printed on the shingle wrapper for additional requirements.

Specifications

Scope: Work includes furnishing all labor, materials and equipment necessary to complete installation of (name) shingles specified herein. Color shall be (name of color). Hip and ridge type to be Elk Seal-A-Ridge with formula *FLX*.

All exposed metal surfaces (flashing, vents, etc.) to be painted with matching Elk roof accessory paint.

Preparation of Roof Deck: Roof deck to be dry, well-seasoned 1" x 6" (25.4mm x 152.4mm) boards; exterior-grade plywood (exposure 1 rated sheathing) at least 3/8" (9.525mm) thick conforming to the specifications of the American Plywood Association; 7/16" (11.074mm) oriented strandboard; or chipboard. Most fire retardant plywood decks are NOT approved substrates for Elk shingles. Consult Elk Field Service for application specifications over other decks and other slopes.

Materials: Underlayment for standard roof slopes, 4" per foot (101.6/304.8mm) or greater: apply non-perforated No. 15 or 30 asphalt-saturated felt underlayment. For Low slopes[4" per foot (101.6/304.8mm) to a minimum of 2" per foot (50.8/304.8mm)], use two plies of underlayment overlapped a minimum of 19". Fasteners shall be of sufficient length and holding power for securing material as required by the application instructions printed on shingle wrapper.

For areas where algae is a problem, shingles shall be (name) with StainGuard treatment, as manufactured by the Elk Tuscaloosa plant. Hip and ridge type to be Seal-A-Ridge with formula *FLX* with StainGuard treatment.

Complete application instructions are published by Elk and printed on the back of every shingle bundle. All warranties are contingent upon the correct installation as shown on the instructions. These instructions are the minimum required to meet Elk application requirements. In some areas, building codes may require additional application techniques or methods beyond our instructions. In these cases, the local code must be followed. Under no circumstances will Elk accept application requirements less than those contained in its application instructions.

For specifications in CSI format, call 800.354.SPEC (7732) or e-mail specinfo@elkcorp.com.

'UTHEAST & 'NTIC OFFICE: 5551

CORPORATE HEADQUARTERS: 800.354.7732

PLANT LOCATION: 800.945.5545

ELK The Premium Choice®
www.elkcorp.com

DIRECTIONS FOR APPLICATION

Please read carefully. Failure to follow these instructions may void the product warranty.
(Typical construction: for illustration purposes only)

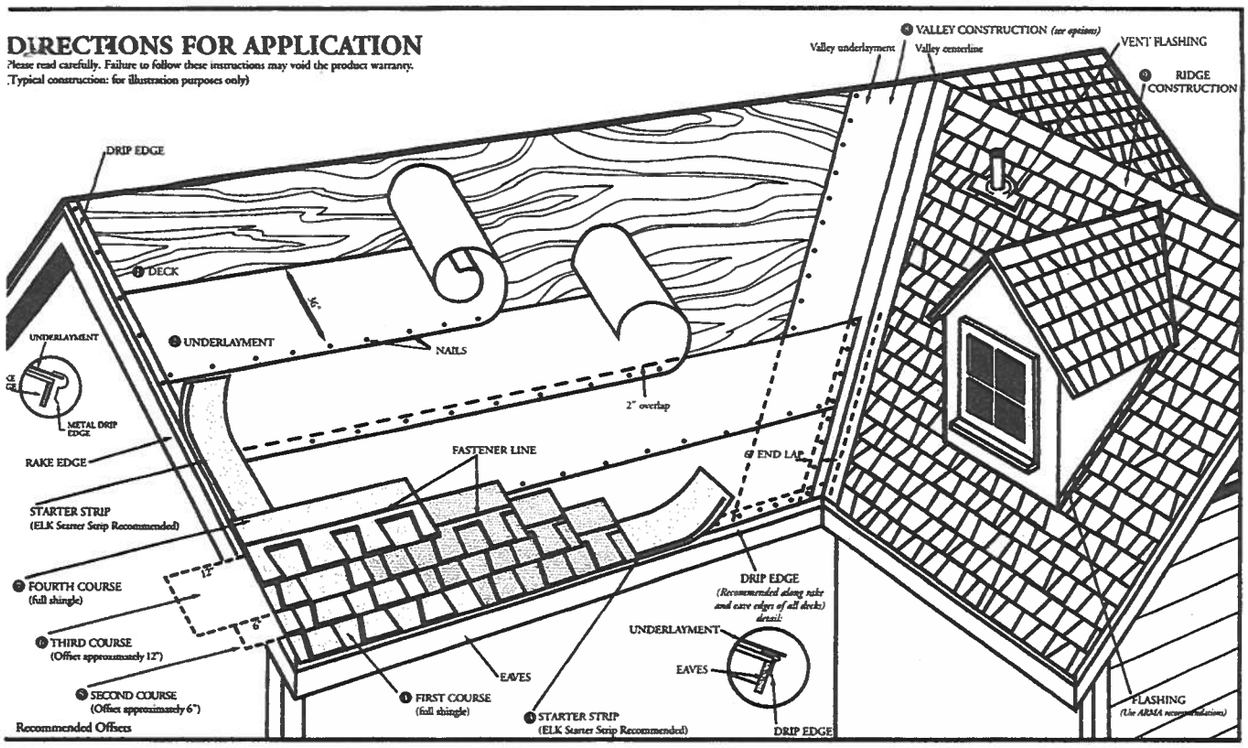

❺ VALLEY CONSTRUCTION OPTIONS
(California Open and California Closed also acceptable valleys.)

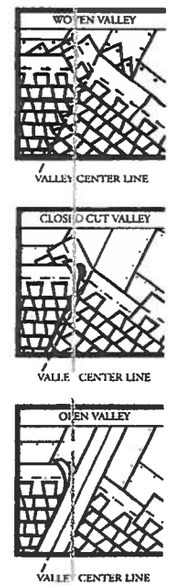

NOTE: For complete ARMA valley installation details, see ARMA roofing installation guide.

DIRECTIONS FOR APPLICATION

These application instructions are the minimum required to meet Elk's application requirements. Your failure to follow these instructions may void the product warranty. In some areas, the building codes may require additional application techniques or methods beyond our instructions. In these cases, the local code must be followed. Under no circumstances will Elk accept application requirements that are less than those printed here. Shingles should not be jammed tightly together. All attics should be properly ventilated. Note: It is not necessary to remove tape on back of shingle.

❶ DECK PREPARATION

Roof decks should be dry, well-seasoned 1" x 6" boards or exterior grade plywood minimum 3/8" thick and conform to the specifications of the American Plywood Association or 7/16" oriented strandboard, or 7/16" chipboard.

❷ UNDERLAYMENT

Apply underlayment (Non-Perforated No. 15 or 30 asphalt saturated felt). Elk Versashield® or self adhering underlayment is also acceptable. Cover drip edge at eaves only.

For low slope(2/12 up to 4/12), completely cover the deck with two plies of underlayment overlapping a minimum of 19". Begin by fastening a 19" wide strip of underlayment placed along the eaves. Place a full 36" wide sheet over the starter, horizontally placed along the eaves and completely overlapping the starter strip.

EAVE FLASHING FOR ICE DAMS (ASK A ROOFING CONTRACTOR, REFER TO ARMA MANUAL OR CHECK LOCAL CODES)

For standard slope (4/12 to less than 21/12), use coated roll roofing of no less than 50 pounds over the felt underlayment extending from the eave edge to a point at least 24" beyond the inside wall of the living space below or one layer of a self-adhered eave and flashing membrane.

For low slope (2/12 up to 4/12), use a continuous layer of asphalt plastic cement between the two plies of underlayment from the eave edge up roof to a point at least 24" beyond the inside wall of the living space below or one layer of a self-adhered eave and flashing membrane.

Consult the Elk Technical Services Department for application specifications over other decks and other slopes.

❸ STARTER SHINGLE COURSE

USE AN ELK STARTER STRIP OR THE HEADLAP OF A STRIP SHINGLE WITH THE ADHESIVE STRIP POSITIONED AT THE EAVE EDGE. With at least 3" trimmed from the end of the first shingle, start at the rake edge overhanging the eave and rake edges 1/2" to 3/4". Fasten 2" from the lower edge and 1" from each side.

❶ FIRST COURSE

Start at rake and continue course with full shingles laid flush with the starter course. Shingles may be applied with a course alignment of 45° on the roof

❺ SECOND COURSE

Offset the second course of shingles with respect to the first by approximately 6". Other offsets are approved if greater than 4".

❻ THIRD COURSE

Offset the next course by 6" with respect to the second course, or consistent with the original offset.

❼ FOURTH COURSE

Start at the rake and continue with full shingles across roof.

FIFTH AND SUCCEEDING COURSES.

Repeat application as shown for second, third, and fourth courses. Do not rack shingles straight up the roof. Offsets may be adjusted around valleys and penetrations.

❺ VALLEY CONSTRUCTION

Open, woven and closed cut valleys are acceptable when applied by Asphalt Roofing Manufacturing Association (ARMA) recommended procedures. For metal valleys, use 36" wide vertical underlayment prior to applying metal flashing (secure edge with nails). No nails are to be within 6" of valley center.

❹ RIDGE CONSTRUCTION

For ridge construction Elk recommends Class "A" Z*Ridge or Seal-A-Ridge® with formula *FLX*™ or RidgeCrest™ with *FLX* (See ridge package for installation instructions). Vented RidgeCrest or 3-tab shingles are also approved.

FASTENERS

While nailing is the preferred method for Elk shingles, Elk will accept fastening methods according to the following instructions.

Using the fastener line as a reference, nail or staple the shingle in the double thickness common bond area. For shingles without a fastener line, nails or staples must be placed between and/or in the sealant dots.

NAILS: Corrosive resistant, 3/8" head, minimum 12-gauge roofing nails. Elk recommends 1-1/4" for new roofs and 1-1/2" for roof-overs. In cases where you are applying shingles to a roof that has an exposed overhang, for new roofs only, 3/4" ring shank nails are allowed to be used from the eave's edge to a point up the roof that is past the outside wall line. 1" ring shank nails allowed for re-roof.

STAPLES: Corrosive resistant, 16-gauge minimum, crown width minimum of 15/16". Note: An improperly adjusted staple gun can result in raised staples that can cause a fish-mouthed appearance and can prevent sealing.

Fasteners should be long enough to obtain 3/4" deck penetration or penetration through deck, whichever is less. This product meets the requirements of the IRC 2003 code when fastened with 4 nails.

MANSARD APPLICATIONS

Correct fastening is critical to the performance of the roof. For slopes exceeding 60° (or 21/12) use six fasteners per shingle. Locate fasteners in the fastener area 1" from each side edge with the remaining four fasteners equally spaced along the length of the double thickness (laminated) area. Only fastening methods according to the above instructions are acceptable.

LIMITED WIND WARRANTY

- For a Limited Wind Warranty, all Prestique and Raised Profile™ shingles must be applied with 4 properly placed fasteners, or in the case of mansard applications, 6 properly placed fasteners per shingle.
- For a Limited Wind Warranty up to 110 MPH for Prestique Gallery Collection or Prestique Plus or 90 MPH for Prestique I, shingles must be applied with 6 properly placed NAILS per shingle. SHINGLES APPLIED WITH STAPLES WILL NOT QUALIFY FOR THIS ENHANCED LIMITED WIND WARRANTY. Also, Elk Starter Strip shingles must be applied at the eaves and rake edges to qualify Prestique Plus, Prestique Gallery Collection and Prestique I shingles for this enhanced Limited Wind Warranty. Under no circumstances should the Elk Shingles or the Elk Starter Strip overhang the eaves or rake edge more than 3/4 of an inch.

HELP STOP BLOW-OFFS AND CALL-BACKS

A minimum of four fasteners must be driven into the DOUBLE THICKNESS (laminated) area of the shingle. Nails or staples must be placed along – and through – the "fastener line" or on products without fastener lines, nail or staple between and in line with sealant dots. CAUTION: Do not use fastener line for shingle alignment.

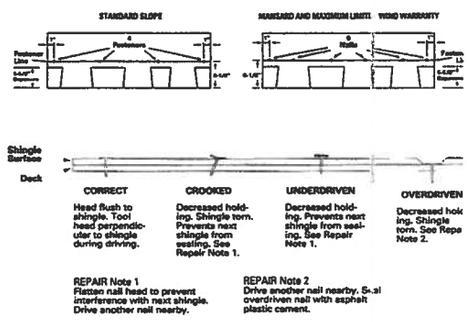

Refer to local codes which in some areas may require specific application techniques beyond those Elk has specified.

All Prestique and Raised Profile shingles have a U.L.® Wind Resistance Rating when applied in accordance with these instructions using nails or staples on re-roofs as well as new construction.

CAUTION TO WHOLESALER: Careless and improper storage or handling can harm fiberglass shingles. Keep these shingles completely covered, dry, reasonably cool, and protected from the weather. Do not store near various sources of heat. Do not store in direct sunlight until applied. DO NOT DOUBLE STACK. Systematically rotate all stock so that the material that has been stored the longest will be the first to be moved out.

ELK
The Premium Choice®
www.elkcorp.com

©2004, Elk Premium Building Products, Inc. All trademarks ®, are registered trademarks of Elk Premium Building Products, Inc All trademarks, ™, are trademarks pending registration of Elk Premium Building Products, Inc., an ElkCorp company. UL is

3) 07-181 American Title Services

Permit Number:[type permit-number]

Tax Folio Number: **02939-129**

State of: **Florida**
County of: **Columbia**

File Number: **07-181**

Inst:2007008970 Date:04/20/2007 Time:13:30
D.T. DC,P.DeWitt Cason,Columbia County B:1117 P:255

NOTICE OF COMMENCEMENT

The undersigned hereby gives notice that improvement will be made to certain real property, and, in accordance with Chapter 713, Florida Statutes, the following information is provided in this Notice of Commencement.

1. Description of Property:
   Lot 29, of Creekside, according to the Plat thereof, as recorded in Plat Book 7, at Page 124 through 125, of the Public Records of Columbia County, Florida

2. General Description of Improvements: Single Family Dwelling

3. Owner Information:
   a. Name and Address: Shane R. Russell, 247 SE Long Leaf Drive, Lake City, Florida 32024

   b. Interest in property: Fee Simple

   c. Names and address of fee simple title holder (if other than owner):

4. Contractor: Edgley Construction Company Corp, Post Office Box 990, Lake City, Florida 32056

5. Surety: N/A

6. Lender: First Federal Savings Bank of Florida, 4705 West U. S. Highway 90, Lake City, Florida 32055

7. Persons within the State of Florida designated by Owner upon whom notices or other documents may be served as provided by Section 713.13(1) (a)7., Florida Statutes.

8. In addition to himself, Owner designates the following persons to receive a copy of the Lienor's Notice as provided in Section 713.13(1)(b), Florida Statutes.

9. Expiration date of Notice of Commencement (the expiration date is 1 year from date of recording unless a different date is specified): _____.

Shane R. Russell

Shane R. Russell

Sworn to and subscribed before me April 19, 2007 by Shane R. Russell who is personally known to me or who did provide drivers License as identification.

Elaine R. Davis

Notary Public
My Commission Expires:

Notary Public - State of Florida
My Commission Expires Oct 14, 2007
Commission # DD 223411
Bonded By National Notary Assn.

STATE OF FLORIDA, COUNTY OF COLUMBIA
I HEREBY CERTIFY, that the above and foregoing is a true copy of the original filed in this office.
P. DeWITT CASON, CLERK OF COURTS
By D Karen Feagle
Deputy Clerk
Date 04-20-2007

CLERK CIRCUIT COURT COLUMBIA COUNTY, FLORIDA

Left message 4/24/07

Columbia County Building Permit Application

1373

For Office Use Only Application # 0704-49 Date Received 4-20-07 By LH Permit # 25-751

Application Approved by - Zoning Official BLK Date 24.04.07 Plans Examiner OKYTH Date 4-23-07

Flood Zone X per plat Development Permit N/A Zoning RSF-2 Land Use Plan Map Category Res. Low Dens.

Comments

☐ NOC ☑ EH ☑ Deed or PA ☑ Site Plan ☐ State Road Info ☐ Parent Parcel # ☐ Development Permit

Need

Fax 752-4904

Name Authorized Person Signing Permit KIMMY EDGLEY Phone 752-0580

Address 590 SW ARLINGTON BLVD SUITE 113 LAKE CITY FL 32025

Owners Name SHANE RUSSELL Phone 752-0580

911 Address 128 SW INWOOD COURT LAKE CITY FL 32025

Contractors Name EDGLEY CONSTRUCTION CO Phone 752-0580

Address 590 SW ARLINGTON BLVD SUITE 113 LAKE CITY FL 32025

Fee Simple Owner Name & Address SHANE RUSSELL

Bonding Co. Name & Address N/A

Architect/Engineer Name & Address MARK DISOSWAY P.E., P.O. BOX 868 LAKE CITY FL 32056

Mortgage Lenders Name & Address FFSB, P.O. BOX 2029, LAKE CITY FL 32056

Circle the correct power company - FL Power & Light - (Clay Elec.) - Suwannee Valley Elec. - Progressive Energ

Property ID Number 12-4S-16-02939-129 Estimated Cost of Construction $163,000.00

Subdivision Name CREEKSIDE Lot 29 Block ____ Unit ____ Phase ____

Driving Directions HWY 90 WEST, TL ON SISTERS WELCOME RD, TR INTO CREEKSIDE, TR ON INWOOD COURT, LOT SECOND ON LEFT

Type of Construction RESIDENTIAL HOME Number of Existing Dwellings on Property N/A

Total Acreage .57 Lot Size ____ Do you need a (Culvert Permit) or Culvert Waiver or Have an Existing Dri

Actual Distance of Structure from Property Lines - Front 36' Side 45' Side 56' Rear 69'

Total Building Height 19'1" Number of Stories 1 Heated Floor Area 1856 Roof Pitch 6/12

TOTAL 2749

Application is hereby made to obtain a permit to do work and installations as indicated. I certify that no work or installation has commenced prior to the issuance of a permit and that all work be performed to meet the standards of all laws regulating construction in this jurisdiction.

OWNERS AFFIDAVIT: I hereby certify that all the foregoing information is accurate and all work will be done in compliance with all applicable laws and regulating construction and zoning.

WARNING TO OWNER: YOUR FAILURE TO RECORD A NOTICE OF COMMENCMENT MAY RESULT IN YOU PAYING TWICE FOR IMPROVEMENTS TO YOUR PROPERTY. IF YOU INTEND TO OBTAIN FINANCING, CONSULT WITH YOUR LENDER OR ATTORNEY BEFORE RECORDING YOUR NOTICE OF COMMENCEMENT.

Kimmy Edgley - Agent

Owner Builder or Authorized Person by Notarized Letter

Contractor Signature

Contractors License Number RR282811326

Competency Card Number 5472

STATE OF FLORIDA
COUNTY OF COLUMBIA

NOTARY STAMP/SEAL

NOTARY PUBLIC STATE OF FLORIDA
JAN CLARK
MY COMMISSION # DD 634946
EXPIRES: March 28, 2011
Bonded Thru Budget Notary Services

Sworn to (or affirmed) and subscribed before me this 19TH day of APRIL 2007.

Personally known ✓ or Produced Identification ____

Notary Signature

(Revised Sept. 20(

Columbia County Building Department
Culvert Permit

Culvert Permit No.
000001373

DATE 04/25/2007 PARCEL ID # 12-4S-16-02939-129

APPLICANT KIMMY EDGLEY PHONE 752-0580

ADDRESS 590 SW ARLINGTON BLVD SUITE 113 LAKE CITY FL 32025

OWNER SHANE RUSSELL PHONE 752-0580

ADDRESS 128 SW INWOOD CT LAKE CITY FL 32025

CONTRACTOR EDGLEY CONSTRUCTION PHONE 752-0580

LOCATION OF PROPERTY 90 W, L 341, R INTO CREEKSIDE, R INWOOD CT, 2ND ON LEFT

SUBDIVISION/LOT/BLOCK/PHASE/UNIT CREEKSIDE 29

SIGNATURE Kimmy Edgley

INSTALLATION REQUIREMENTS

[X] Culvert size will be 18 inches in diameter with a total lenght of 32 feet, leaving 24 feet of driving surface. Both ends will be mitered 4 foot with a 4 : 1 slope and poured with a 4 inch thick reinforced concrete slab.

INSTALLATION NOTE: Turnouts will be required as follows:
a) a majority of the current and existing driveway turnouts are paved, or;
b) the driveway to be served will be paved or formed with concrete.
Turnouts shall be concrete or paved a minimum of 12 feet wide or the width of the concrete or paved driveway, whichever is greater. The width shall conform to the current and existing paved or concreted turnouts.

[ ] Culvert installation shall conform to the approved site plan standards.

[ ] Department of Transportation Permit installation approved standards.

[ ] Other

ALL PROPER SAFETY REQUIREMENTS SHOULD BE FOLLOWED DURING THE INSTALATION OF THE CULVERT.

135 NE Hernando Ave., Suite B-21
Lake City, FL 32055
Phone: 386-758-1008 Fax: 386-758-2160

Amount Paid 25.00

Application for Onsite Sewage Disposal System Construction Permit. Part II Site Plan

Permit Application Number: 07-306

ALL CHANGES MUST BE APPROVED BY THE COUNTY HEALTH UNIT

RUSSELL/CR 06-3939

Creekside, Lot 29

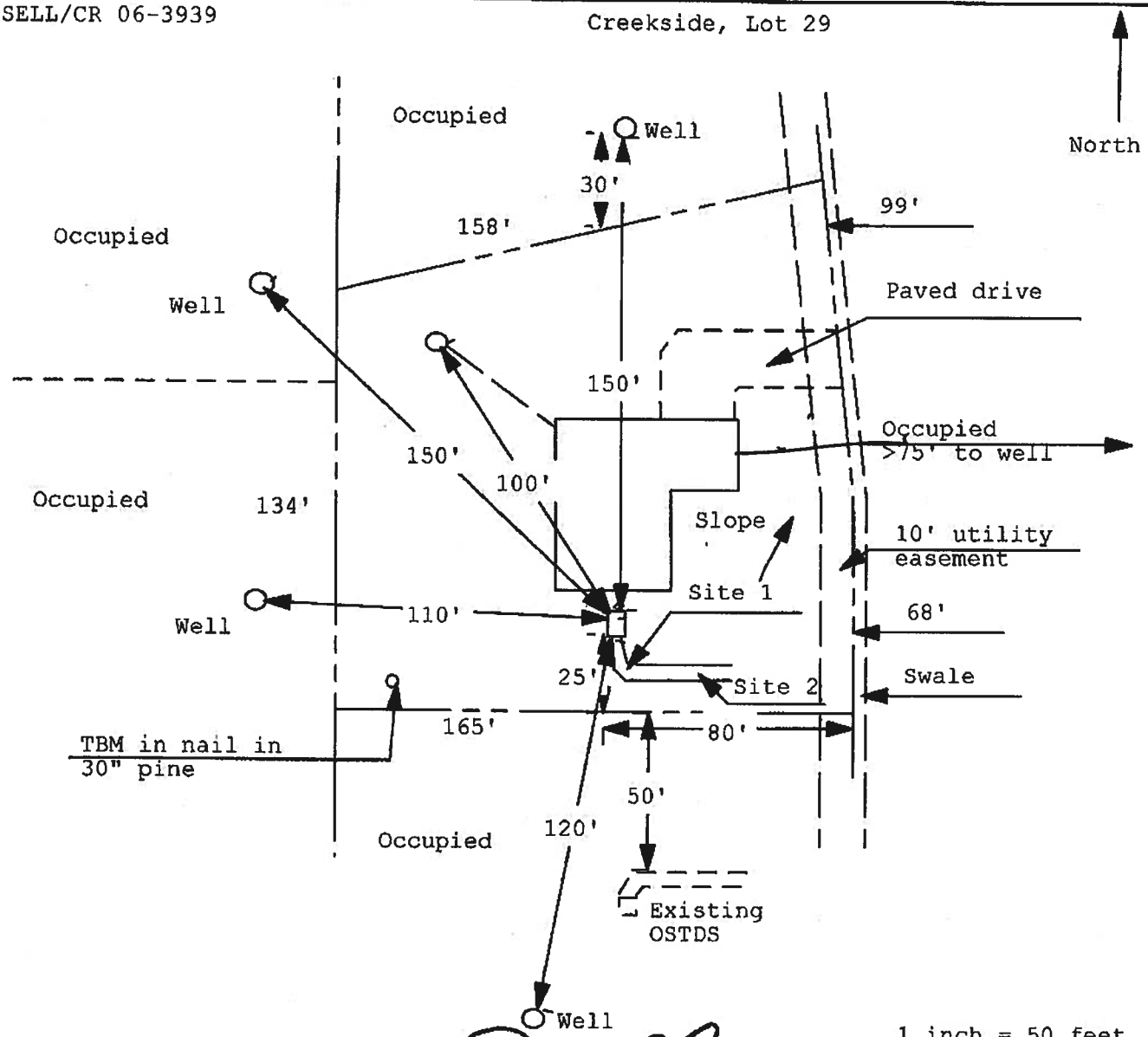

Site Plan Submitted By Paul [illegible] **Date** 4/4/07

Plan Approved ✓ **Not Approved** ____ **Date** 4/12/07

By [illegible] Columbia **CPHU**

Notes:

New Construction Subterranean Termite Soil Treatment Record

OMB Approval No. 2502-0525

This form is completed by the licensed Pest Control Company.

Public reporting burden for this collection of information is estimated to average 15 minutes per response, including the time for reviewing instructions, searching existing data sources, gathering and maintaining the data needed, and completing and reviewing the collection of information. This information is mandatory and is required to obtain benefits. HUD may not collect this information, and you are not required to complete this form, unless it displays a currently valid OMB control number.
Section 24 CFR 200.926d(b)(3) requires that the sites for HUD insured structures must be free of termite hazards. This information collection requires the builder to certify that an authorized Pest Control company performed all required treatment for termites, and that the builder guarantees the treated area against infestation for one year. Builders, pest control companies, mortgage lenders, homebuyers, and HUD as a record of treatment for specific homes will use the information collected. The information is not considered confidential.

This report is submitted for informational purposes to the builder on proposed (new) construction cases when soil treatment for prevention of subterranean termite infestation is specified by the builder, architect, or required by the lender, architect, FHA, or VA.

All contracts for services are between the Pest Control Operator and builder, unless stated otherwise.

#25751

Section 1: General Information (Treating Company Information)

Company Name: Aspen Pest Control, Inc.
Company Address: 301 NW Cole Terrace City Lake City State FL Zip 32055
Company Business License No. JB103476 Company Phone No. 386-755-3011
FHA/VA Case No. (if any)

Section 2: Builder Information

Company Name: Doug Edgely Const Company Phone No.

Section 3: Property Information

Location of Structure(s) Treated (Street Address or Legal Description, City, State and Zip) 128 S.W Inwood Ct. Lake City, FL #1

Type of Construction (More than one box may be checked) ☒ Slab ☐ Basement ☐ Crawl ☐ Other
Approximate Depth of Footing: Outside 12 Inside 12 Type of Fill Mix

Section 4: Treatment Information

Date(s) of Treatment(s) 5-23-07
Brand Name of Product(s) Used B-fin
EPA Registration No. 53883-184
Approximate Final Mix Solution % .06
Approximate Size of Treatment Area: Sq. ft. 2749 Linear ft. 261 Linear ft. of Masonry Voids 261
Approximate Total Gallons of Solution Applied 431
Was treatment completed on exterior? ☐ Yes ☒ No
Service Agreement Available? ☒ Yes ☐ No
Note: Some state laws require service agreements to be issued. This form does not preempt state law.

Attachments (List)

Comments

Name of Applicator(s) Steve Brannen Certification No. (if required by State law) JF104376

The applicator has used a product in accordance with the product label and state requirements. All treatment materials and methods used comply with state and federal regulations.

Authorized Signature Date 5-23-07

Warning: HUD will prosecute false claims and statements. Conviction may result in criminal and/or civil penalties. (18 U.S.C. 1001, 1010. 1012; 31 U.S.C. 3729, 3802)

Form **NPCA-99-B** may still be used form **HUD-NPCA-99-B** (04/2003)

Reorder Product #2581 • from CROWNMAX • 1-800-252-4011

COLUMBIA COUNTY 9-1-1 ADDRESSING / GIS DEPARTMENT

P. O. Box 1787, Lake City, FL 32056-1787
Telephone: (386) 758-1125 * Fax: (386) 758-1365 * E-mail: ron_croft@columbiacountyfla.com

ADDRESS ASSIGNMENT DATA

The Columbia County Board of County Commissioners has passed Ordinance 2001-9, which provides for a uniform numbering system. A copy of this ordinance is available in the Clerk of Court records, located in the courthouse. This new numbering system will increase the efficiency of POLICE, FIRE AND EMERGENCY MEDICAL vehicles responding to calls within Columbia County by immediately identifying the location of the caller.

Residential or Other Structure on Parcel Number:
12-4S-16-02939-129
Address Assignment:
128 SW INWOOD CT, LAKE CITY, FL, 32025

Any questions concerning this information should be referred to the Columbia County 9-1-1 Addressing / GIS Department at the address or telephone number above.

COLUMBIA COUNTY
9-1-1 AD[illegible]NG
APP[illegible]

HALL'S PUMP & WELL SERVICE, INC.

SPECIALIZING IN 4"-6" WELLS

DONALD AND MARY HALL
OWNERS

PHONE (904) 752-1854
FAX (904) 755-7022
LAKE CITY, FLORIDA 32055
904 NW Main Blvd.

June 12, 2002

NOTICE TO ALL CONTRACTORS

Please be advised that due to the new building codes we will use a large capacity diaphram tank on all new wells. This will insure a minimum of one (1) minute draw down or one (1) minute refill. If a smaller diaphram tank is used then we will install a cycle stop valve which will produce the same results.

If you have any questions please feel free to call our office anytime.

Thank you,

Donald D. Hall
DDH/jk

FORM 600A-2004 EnergyGauge® 4.1

FLORIDA ENERGY EFFICIENCY CODE FOR BUILDING CONSTRUCTION

Florida Department of Community Affairs

Residential Whole Building Performance Method A

Project Name:	**704034EdgleyConstruction**	Builder:	
Address:	**128 SW Kinwood Court**	Permitting Office:	
City, State:	**Lake City, FL 32025-**	Permit Number:	
Owner:	**Russell, Shane Residence**	Jurisdiction Number:	
Climate Zone:	**North**		

1. New construction or existing	New	
2. Single family or multi-family	Single family	
3. Number of units, if multi-family	1	
4. Number of Bedrooms	3	
5. Is this a worst case?	Yes	
6. Conditioned floor area (ft²)	1856 ft²	
7. Glass type[1] and area: (Label reqd. by 13-104.4.5 if not default)		
a. U-factor: (or Single or Double DEFAULT) 7a.	Description Area (Dble Default) 211.3 ft²	
b. SHGC: (or Clear or Tint DEFAULT) 7b.	(Clear) 211.3 ft²	
8. Floor types		
a. Slab-On-Grade Edge Insulation	R=0.0, 182.0(p) ft	
b. N/A		
c. N/A		
9. Wall types		
a. Frame, Wood, Exterior	R=13.0, 1036.7 ft²	
b. Frame, Wood, Adjacent	R=13.0, 148.0 ft²	
c. N/A		
d. N/A		
e. N/A		
10. Ceiling types		
a. Under Attic	R=30.0, 1958.0 ft²	
b. N/A		
c. N/A		
11. Ducts		
a. Sup: Unc. Ret: Unc. AH: Garage	Sup. R=6.0, 176.0 ft	
b. N/A		

12. Cooling systems		
a. Central Unit	Cap: 34.0 kBtu/hr	
	SEER: 13.00	
b. N/A		
c. N/A		
13. Heating systems		
a. Electric Heat Pump	Cap: 34.0 kBtu/hr	
	HSPF: 7.90	
b. N/A		
c. N/A		
14. Hot water systems		
a. Electric Resistance	Cap: 40.0 gallons	
	EF: 0.93	
b. N/A		
c. Conservation credits (HR-Heat recovery, Solar DHP-Dedicated heat pump)		
15. HVAC credits (CF-Ceiling fan, CV-Cross ventilation, HF-Whole house fan, PT-Programmable Thermostat, MZ-C-Multizone cooling, MZ-H-Multizone heating)		

Glass/Floor Area: 0.11

Total as-built points: 23703
Total base points: 26660

PASS

I hereby certify that the plans and specifications covered by this calculation are in compliance with the Florida Energy Code.

PREPARED BY: _____

DATE: 4-4-07

I hereby certify that this building, as designed, is in compliance with the Florida Energy Code.

OWNER/AGENT: _____

DATE: _____

Review of the plans and specifications covered by this calculation indicates compliance with the Florida Energy Code. Before construction is completed this building will be inspected for compliance with Section 553.908 Florida Statutes.

BUILDING OFFICIAL: _____

DATE: _____

1 Predominant glass type. For actual glass type and areas, see Summer & Winter Glass output on pages 2&4.

SUMMER CALCULATIONS

Residential Whole Building Performance Method A - Details

ADDRESS: **128 SW Kinwood Court, Lake City, FL, 32025-** PERMIT #:

BASE

GLASS TYPES

.18 X	Conditioned Floor Area	X BSPM	= Points
.18	1856.0	20.04	6695.0

WALL TYPES

	Area	X BSPM	= Points
Adjacent	148.0	0.70	103.6
Exterior	1036.7	1.70	1762.4
Base Total:	**1184.7**		**1866.0**

DOOR TYPES

	Area	X BSPM	= Points
Adjacent	20.0	1.60	32.0
Exterior	40.0	4.10	164.0
Base Total:	**60.0**		**196.0**

CEILING TYPES

	Area	X BSPM	= Points
Under Attic	1856.0	1.73	3210.9
Base Total:	**1856.0**		**3210.9**

FLOOR TYPES

	Area	X BSPM	= Points
Slab	182.0(p)	-37.0	-6734.0
Raised	0.0	0.00	0.0
Base Total:			**-6734.0**

INFILTRATION

Area	X BSPM	= Points
1856.0	10.21	18949.8

AS-BUILT

Type/SC	Overhang Ornt	Len	Hgt	Area	X SPM	X SOF	= Points
Double, Clear	SW	8.0	5.5	20.0	40.16	0.43	344.5
Double, Clear	SW	8.0	5.5	30.0	40.16	0.43	516.7
Double, Clear	S	8.0	5.5	20.0	35.87	0.48	341.6
Double, Clear	SW	1.5	5.5	60.0	40.16	0.86	2079.6
Double, Clear	NW	1.5	1.5	4.0	25.97	0.64	66.3
Double, Clear	NE	7.0	5.5	30.0	29.56	0.54	475.3
Double, Clear	NE	7.0	7.3	13.3	29.56	0.60	233.9
Double, Clear	NE	1.5	5.5	30.0	29.56	0.91	802.9
Double, Clear	SE	1.5	1.5	4.0	42.75	0.49	84.6
As-Built Total:				**211.3**			**4945.5**

Type	R-Value	Area	X SPM	= Points
Frame, Wood, Exterior	13.0	1036.7	1.50	1555.0
Frame, Wood, Adjacent	13.0	148.0	0.60	88.8
As-Built Total:		**1184.7**		**1643.8**

Type	Area	X SPM	= Points
Exterior Insulated	20.0	4.10	82.0
Exterior Insulated	20.0	4.10	82.0
Adjacent Insulated	20.0	1.60	32.0
As-Built Total:	**60.0**		**196.0**

Type	R-Value	Area	X SPM X SCM	= Points
Under Attic	30.0	1958.0	1.73 X 1.00	3387.3
As-Built Total:		**1958.0**		**3387.3**

Type	R-Value	Area	X SPM	= Points
Slab-On-Grade Edge Insulation	0.0	182.0(p	-41.20	-7498.4
As-Built Total:		**182.0**		**-7498.4**

Area	X SPM	= Points
1856.0	10.21	18949.8

SUMMER CALCULATIONS

Residential Whole Building Performance Method A - Details

ADDRESS: **128 SW Kinwood Court, Lake City, FL, 32025-** PERMIT #:

BASE				AS-BUILT							
Summer Base Points: 24183.6				**Summer As-Built Points:**							**21624.0**
Total Summer Points	X	System Multiplier	=	Cooling Points	Total Component (System - Points)	X	Cap Ratio	X	Duct Multiplier (DM x DSM x AHU)	X	System Multiplier	X	Credit Multiplier	=	Cooling Points
					(sys 1: Central Unit 34000 btuh ,SEER/EFF(13.0) Ducts:Unc(S),Unc(R),Gar(AH),R6.0(INS)										
					21624		1.00		(1.09 x 1.147 x 1.00)		0.263		1.000		7097.7
24183.6		**0.4266**		**10316.7**	**21624.0**		**1.00**		**1.250**		**0.263**		**1.000**		**7097.7**

WINTER CALCULATIONS

Residential Whole Building Performance Method A - Details

ADDRESS: **128 SW Kinwood Court, Lake City, FL, 32025-** PERMIT #:

BASE

GLASS TYPES .18 X Conditioned Floor Area	X BWPM	= Points
.18 1856.0	12.74	4256.2

WALL TYPES	Area X BWPM	= Points
Adjacent	148.0 3.60	532.8
Exterior	1036.7 3.70	3835.8
Base Total:	**1184.7**	**4368.6**

DOOR TYPES	Area X BWPM	= Points
Adjacent	20.0 8.00	160.0
Exterior	40.0 8.40	336.0
Base Total:	**60.0**	**496.0**

CEILING TYPES	Area X BWPM	= Points
Under Attic	1856.0 2.05	3804.8
Base Total:	**1856.0**	**3804.8**

FLOOR TYPES	Area X BWPM	= Points
Slab	182.0(p) 8.9	1619.8
Raised	0.0 0.00	0.0
Base Total:		**1619.8**

INFILTRATION	Area X BWPM	= Points
	1856.0 -0.59	-1095.0

AS-BUILT

Type/SC	Overhang Ornt	Len	Hgt	Area X	WPM X	WOF =	Points
Double, Clear	SW	8.0	5.5	20.0	16.74	1.80	601.2
Double, Clear	SW	8.0	5.5	30.0	16.74	1.80	901.8
Double, Clear	S	8.0	5.5	20.0	13.30	3.24	861.9
Double, Clear	SW	1.5	5.5	60.0	16.74	1.07	1076.8
Double, Clear	NW	1.5	1.5	4.0	24.30	1.02	99.6
Double, Clear	NE	7.0	5.5	30.0	23.57	1.05	742.3
Double, Clear	NE	7.0	7.3	13.3	23.57	1.04	326.9
Double, Clear	NE	1.5	5.5	30.0	23.57	1.01	712.7
Double, Clear	SE	1.5	1.5	4.0	14.71	1.94	113.9
As-Built Total:				**211.3**			**5437.1**

Type	R-Value	Area X	WPM	= Points
Frame, Wood, Exterior	13.0	1036.7	3.40	3524.8
Frame, Wood, Adjacent	13.0	148.0	3.30	488.4
As-Built Total:		**1184.7**		**4013.2**

Type	Area X	WPM	= Points
Exterior Insulated	20.0	8.40	168.0
Exterior Insulated	20.0	8.40	168.0
Adjacent Insulated	20.0	8.00	160.0
As-Built Total:	**60.0**		**496.0**

Type	R-Value	Area X	WPM X WCM	= Points
Under Attic	30.0	1958.0	2.05 X 1.00	4013.9
As-Built Total:		**1958.0**		**4013.9**

Type	R-Value	Area X	WPM	= Points
Slab-On-Grade Edge Insulation	0.0	182.0(p	18.80	3421.6
As-Built Total:		**182.0**		**3421.6**

Area X	WPM	= Points
1856.0	-0.59	-1095.0

WINTER CALCULATIONS

Residential Whole Building Performance Method A - Details

ADDRESS: **128 SW Kinwood Court, Lake City, FL, 32025-** PERMIT #:

BASE				AS-BUILT							
Winter Base Points:			**13450.3**	**Winter As-Built Points:**							**16286.7**
Total Winter Points	X	System Multiplier	= Heating Points	Total Component (System - Points)	X	Cap Ratio	X Duct Multiplier (DM x DSM x AHU)	X System Multiplier	X Credit Multiplier	=	Heating Points
				(sys 1: Electric Heat Pump 34000 btuh ,EFF(7.9) Ducts:Unc(S),Unc(R),Gar(AH),R6.0							
				16286.7		1.000	(1.069 x 1.169 x 1.00)	0.432	1.000		8785.2
13450.3		**0.6274**	**8438.7**	**16286.7**		**1.00**	**1.250**	**0.432**	**1.000**		**8785.2**

WATER HEATING & CODE COMPLIANCE STATUS

Residential Whole Building Performance Method A - Details

ADDRESS: **128 SW Kinwood Court, Lake City, FL, 32025-** PERMIT #:

BASE					AS-BUILT							
WATER HEATING												
Number of Bedrooms	X	Multiplier	=	Total	Tank Volume	EF	Number of Bedrooms	X	Tank Ratio	X Multiplier	X Credit Multiplier	= Total
3		2635.00		7905.0	40.0	0.93	3		1.00	2606.67	1.00	7820.0
					As-Built Total:							**7820.0**

CODE COMPLIANCE STATUS

BASE				AS-BUILT			
Cooling Points +	Heating Points +	Hot Water Points =	Total Points	Cooling Points +	Heating Points +	Hot Water Points =	Total Points
10317	**8439**	**7905**	**26660**	**7098**	**8785**	**7820**	**23703**

PASS

Code Compliance Checklist

Residential Whole Building Performance Method A - Details

ADDRESS: **128 SW Kinwood Court, Lake City, FL, 32025-** PERMIT #:

6A-21 INFILTRATION REDUCTION COMPLIANCE CHECKLIST

COMPONENTS	SECTION	REQUIREMENTS FOR EACH PRACTICE	CHECK
Exterior Windows & Doors	606.1.ABC.1.1	Maximum:.3 cfm/sq.ft. window area; .5 cfm/sq.ft. door area.	
Exterior & Adjacent Walls	606.1.ABC.1.2.1	Caulk, gasket, weatherstrip or seal between: windows/doors & frames, surrounding wall; foundation & wall sole or sill plate; joints between exterior wall panels at corners; utility penetrations; between wall panels & top/bottom plates; between walls and floor. EXCEPTION: Frame walls where a continuous infiltration barrier is installed that extends from, and is sealed to, the foundation to the top plate.	
Floors	606.1.ABC.1.2.2	Penetrations/openings >1/8" sealed unless backed by truss or joint members. EXCEPTION: Frame floors where a continuous infiltration barrier is installed that is sealed to the perimeter, penetrations and seams.	
Ceilings	606.1.ABC.1.2.3	Between walls & ceilings; penetrations of ceiling plane of top floor; around shafts, chases, soffits, chimneys, cabinets sealed to continuous air barrier; gaps in gyp board & top plate; attic access. EXCEPTION: Frame ceilings where a continuous infiltration barrier is installed that is sealed at the perimeter, at penetrations and seams.	
Recessed Lighting Fixtures	606.1.ABC.1.2.4	Type IC rated with no penetrations, sealed; or Type IC or non-IC rated, installed inside a sealed box with 1/2" clearance & 3" from insulation; or Type IC rated with < 2.0 cfm from conditioned space, tested.	
Multi-story Houses	606.1.ABC.1.2.5	Air barrier on perimeter of floor cavity between floors.	
Additional Infiltration reqts	606.1.ABC.1.3	Exhaust fans vented to outdoors, dampers; combustion space heaters comply with NFPA, have combustion air.	

6A-22 OTHER PRESCRIPTIVE MEASURES (must be met or exceeded by all residences.)

COMPONENTS	SECTION	REQUIREMENTS	CHECK
Water Heaters	612.1	Comply with efficiency requirements in Table 612.1.ABC.3.2. Switch or clearly marked circuit breaker (electric) or cutoff (gas) must be provided. External or built-in heat trap required.	
Swimming Pools & Spas	612.1	Spas & heated pools must have covers (except solar heated). Non-commercial pools must have a pump timer. Gas spa & pool heaters must have a minimum thermal efficiency of 78%.	
Shower heads	612.1	Water flow must be restricted to no more than 2.5 gallons per minute at 80 PSIG.	
Air Distribution Systems	610.1	All ducts, fittings, mechanical equipment and plenum chambers shall be mechanically attached, sealed, insulated, and installed in accordance with the criteria of Section 610. Ducts in unconditioned attics: R-6 min. insulation.	
HVAC Controls	607.1	Separate readily accessible manual or automatic thermostat for each system.	
Insulation	604.1, 602.1	Ceilings-Min. R-19. Common walls-Frame R-11 or CBS R-3 both sides. Common ceiling & floors R-11.	

ENERGY PERFORMANCE LEVEL (EPL) DISPLAY CARD

ESTIMATED ENERGY PERFORMANCE SCORE* = 85.3

The higher the score, the more efficient the home.

Russell, Shane Residence, 128 SW Kinwood Court, Lake City, FL, 32025-

1. New construction or existing	New	
2. Single family or multi-family	Single family	
3. Number of units, if multi-family	1	
4. Number of Bedrooms	3	
5. Is this a worst case?	Yes	
6. Conditioned floor area (ft²)	1856 ft²	
7. Glass type [1] and area: (Label reqd. by 13-104.4.5 if not default)		
a. U-factor: (or Single or Double DEFAULT) 7a.	Description Area (Dble Default) 211.3 ft²	
b. SHGC: (or Clear or Tint DEFAULT) 7b.	(Clear) 211.3 ft²	
8. Floor types		
a. Slab-On-Grade Edge Insulation	R=0.0, 182.0(p) ft	
b. N/A		
c. N/A		
9. Wall types		
a. Frame, Wood, Exterior	R=13.0, 1036.7 ft²	
b. Frame, Wood, Adjacent	R=13.0, 148.0 ft²	
c. N/A		
d. N/A		
e. N/A		
10. Ceiling types		
a. Under Attic	R=30.0, 1958.0 ft²	
b. N/A		
c. N/A		
11. Ducts		
a. Sup: Unc. Ret: Unc. AH: Garage	Sup. R=6.0, 176.0 ft	
b. N/A		

12. Cooling systems		
a. Central Unit	Cap: 34.0 kBtu/hr	
	SEER: 13.00	
b. N/A		
c. N/A		
13. Heating systems		
a. Electric Heat Pump	Cap: 34.0 kBtu/hr	
	HSPF: 7.90	
b. N/A		
c. N/A		
14. Hot water systems		
a. Electric Resistance	Cap: 40.0 gallons	
	EF: 0.93	
b. N/A		
c. Conservation credits (HR-Heat recovery, Solar DHP-Dedicated heat pump)		
15. HVAC credits (CF-Ceiling fan, CV-Cross ventilation, HF-Whole house fan, PT-Programmable Thermostat, MZ-C-Multizone cooling, MZ-H-Multizone heating)		

I certify that this home has complied with the Florida Energy Efficiency Code For Building Construction through the above energy saving features which will be installed (or exceeded) in this home before final inspection. Otherwise, a new EPL Display Card will be completed based on installed Code compliant features.

Builder Signature: _____ Date: _____

Address of New Home: _____ City/FL Zip: _____

**NOTE: The home's estimated energy performance score is only available through the FLA/RES computer program. This is not a Building Energy Rating. If your score is 80 or greater (or 86 for a US EPA/DOE EnergyStar™ designation), your home may qualify for energy efficiency mortgage (EEM) incentives if you obtain a Florida Energy Gauge Rating. Contact the Energy Gauge Hotline at 321/638-1492 or see the Energy Gauge web site at www.fsec.ucf.edu for information and a list of certified Raters. For information about Florida's Energy Efficiency Code For Building Construction, contact the Department of Community Affairs at 850/487-1824.*

1 Predominant glass type. For actual glass type and areas, see Summer & Winter Glass output on pages 2&4.

Doug Edgley

AAMA/NWWDA 101/I.S.2-97
TEST REPORT SUMMARY

Rendered to:

MI HOME PRODUCTS, INC.

SERIES/MODEL: 650 Fin
TYPE: Aluminum Single Hung Window

Title of Test	Results
Rating	H-R40 52 x 72
Overall Design Pressure	+45.0 psf -47.2 psf
Operating Force	11 lb max.
Air Infiltration	0.13 cfm/ft^2
Water Resistance	6.00 psf
Structural Test Pressure	+67.5 psf -70.8 psf
Deglazing	Passed
Forced Entry Resistance	Grade 10

Reference should be made to Report No. 01-41134.01 dated 03/26/02 for complete test specimen description and data.

For ARCHITECTURAL TESTING, INC.

Mark A. Hess

Mark A. Hess, Technician

MAH:nlb

Allen M. Reeves
1 APRIL 2002

ALLEN M. REEVES
CERTIFICATE NO. 13354
STATE OF FLORIDA
PROFESSIONAL ENGINEER

Architectural Testing

AAMA/NWWDA 101/I.S.2-97 TEST REPORT

Rendered to

MI HOME PRODUCTS, INC.
650 West Market Street
P.O. Box 370
Gratz, Pennsylvania 17030-0370

Report No: 01-41134.01
Test Date: 03/07/02
Report Date: 03/26/02
Expiration Date: 03/07/06

Project Summary: Architectural Testing, Inc. (ATI) was contracted by MI Home Products, Inc. to perform tests on Series/Model 650 Fin, aluminum single hung window at their facility located in Elizabethville, Pennsylvania. The samples tested successfully met the performance requirements for a H-R40 52 x 72 rating.

Test Specification: The test specimen was evaluated in accordance with AAMA/NWWDA 101/I.S.2-97, *Voluntary Specifications for Aluminum, Vinyl (PVC) and Wood Windows and Glass Doors.*

Test Specimen Description:

Series/Model: 650 Fin

Type: Aluminum Single Hung Window

Overall Size: 4' 4-1/4" wide by 6' 0-3/8" high

Active Sash Size: 4' 1-3/4" wide by 3' 0-5/8" high

Daylight Opening Size: 3' 11-3/8" wide by 2' 9-1/2" high

Screen Size: 4' 0-1/4" wide by 2' 11-1/8" high

Finish: All aluminum was white.

Glazing Details: The active and fixed lites utilized 5/8" thick, sealed insulating glass constructed from two sheets of 1/8" thick, clear annealed glass and a metal reinforced butyl spacer system. The active sash was channel glazed utilizing a flexible vinyl wrap-around gasket. The fixed lite was interior glazed against double-sided adhesive foam tape and secured with PVC snap-in glazing beads.

130 Derry Court
York, PA 17402-9405
phone: 717.764.7700
fax: 717.764.4129
www.archtest.com

Allen M. Reeves
1 APRIL 2002

REEVES NO. 19354 STATE OF FLORIDA PROFESSIONAL ENGINEER

Test Specimen Description: (Continued)

Weatherstripping:

Description	Quantity	Location
0.230" high by 0.270" backed polypile with center fin	1 Row	Fixed meeting rail
0.250" high by 0.187" backed polypile with center fin	2 Rows	Active sash stiles
1/2" x 1/2" dust plug	4 Pieces	Active sash, top and bottom of stiles
1/4" foam-filled vinyl bulb seal	1 Row	Active sash, bottom rail

Frame Construction: The frame was constructed of extruded aluminum with coped, butted, and sealed corners fastened with two #8 x 1" screws through the head and sill into each jamb screw boss. End caps were utilized on the ends of the fixed meeting rail and secured with two 1-1/4" screws per cap. Meeting rail was secured to the frame utilizing two 1-1/4" screws.

Sash Construction: The sash was constructed of extruded aluminum with coped, butted, and sealed corners fastened with two #8 x 1-1/2" screws through the rails into each jamb screw boss.

Screen Construction: The screen was constructed from roll-formed aluminum with keyed corners. The fiberglass mesh was secured with a flexible spline.

Hardware:

Description	Quantity	Location
Metal cam lock with keeper		Midspan, active meeting rail with keeper adjacent on fixed meeting rail
Plastic tilt latch	2	Active sash, meeting rail ends
Metal tilt pin	2	Active sash, bottom rail ends
Balance assembly	2	One in each jamb
Screen plunger	2	4" from rail ends on top rail

Allen N. Reeves
1 APRIL 2002

ALLEN N. REEVES
CERTIFICATE NO. 19354
STATE OF FLORIDA
PROFESSIONAL ENGINEER

Test Specimen Description: (Continued)

Drainage: Sloped sill

Reinforcement: No reinforcement was utilized.

Installation: The test specimen was installed into a 2 x 8 #2 Spruce-Pine-Fir wood test buck with #8 x 1-5/8" drywall screws every 8" on center around the nail fin. Polyurethane was used as a sealant under the nail fin and around the exterior perimeter.

Test Results:

The results are tabulated as follows:

Paragraph	Title of Test - Test Method	Results	Allowed
2.2.1.6.1	Operating Force	11 lbs	30 lbs max
	Air Infiltration (ASTM E 283-91) @ 1.57 psf (25 mph)	0.13 cfm/ft^2	0.3 cfm/ft^2 max

Note #1: *The tested specimen meets the performance levels specified in AAMA/NWWDA 101/I.S. 2-97 for air infiltration.*

	Water Resistance (ASTM E 547-00) (with and without screen) WTP = 2.86 psf	No leakage	No leakage
2.1.4.1	Uniform Load Deflection (ASTM E 330-97) (Measurements reported were taken on the meeting rail) (Loads were held for 33 seconds)		
	@ 25.9 psf (positive)	0.42"*	0.26" max.
	@ 34.7 psf (negative)	0.43"*	0.26" max.

**Exceeds L/175 for deflection, but passes all other test requirements.*

2.1.4.2	Uniform Load Structural (ASTM E 330-97) (Measurements reported were taken on the meeting rail) (Loads were held for 10 seconds)		
	@ 38.9 psf (positive)	0.02"	0.18" max.
	@ 52.1 psf (negative)	0.02"	0.18" max.

ALLEN N. REEVES
CERTIFICATE
NO. 13357

Test Specimen Description: (Continued)

Paragraph	Title of Test - Test Method	Results	Allowed
2.2.1.6.2	Deglazing Test (ASTM E 987)		
	In operating direction at 70 lbs		
	Meeting rail	0.12"/25%	0.50"/100%
	Bottom rail	0.12"/25%	0.50"/100%
	In remaining direction at 50 lbs		
	Left stile	0.06"/12%	0.50"/100%
	Right stile	0.06"/12%	0.50"/100%
	Forced Entry Resistance (ASTM F 588-97)		
	Type: A		
	Grade: 10		
	Lock Manipulation Test	No entry	No entry
	Tests A1 through A5	No entry	No entry
	Test A7	No entry	No entry
	Lock Manipulation Test	No entry	No entry
Optional Performance			
4.3	Water Resistance (ASTM E 547-00) (with and without screen) WTP = 6.00 psf	No leakage	No leakage
	Uniform Load Deflection (ASTM E 330-97) (Measurements reported were taken on the meeting rail) (Loads were held for 33 seconds)		
	@ 45.0 psf (positive)	0.47"*	0.26" max.
	@ 47.2 psf (negative)	0.46"*	0.26" max.

**Exceeds L/175 for deflection, but passes all other test requirements.*

	Uniform Load Structural (ASTM E 330-97) (Measurements reported were taken on the meeting rail) (Loads were held for 10 seconds)		
	@ 67.5 psf (positive)	0.05"	0.18" max.
	@ 70.8 psf (negative)	0.05"	0.18" max.

Allen N. Reeves
1 APRIL 2002

ALLEN N. REEVES
CERTIFICATE NO. 19334
STATE OF FLORIDA
PROFESSIONAL ENGINEER

Detailed drawings, representative samples of the test specimen, and a copy of this report will be retained by ATI for a period of four years. The above results were secured by using the designated test methods and they indicate compliance with the performance requirements of the above referenced specification. This report does not constitute certification of this product, which may only be granted by the certification program administrator.

For ARCHITECTURAL TESTING, INC:

Mark A. Hess
Technician

Allen N. Reeves, P.E.
Director - Engineering Services
1 APRIL 2002

MAH:nlb
01-41134.01

ALLEN N. REEVES
CERTIFICATE NO. 13064
STATE OF FLORIDA
PROFESSIONAL ENGINEER

X
Glazed Inswing Unit

COP-WL-JH4141-02

WOOD-EDGE STEEL DOORS

APPROVED ARRANGEMENT:

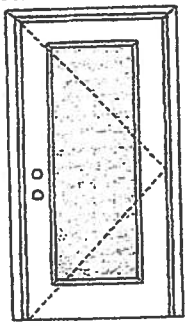

Note:
Units of other sizes are covered by this report as long as the panel used does not exceed 3'0" x 6'8".

Warnock Hersey

Test Data Review Certificate #3026447A and COP/Test Report Validation Matrix #3026447A-001 provides additional information - available from the ITS/WH website (www.gtisemko.com), the Masonite website (www.masonite.com) or the Masonite technical center.

Single Door
Maximum unit size = 3'0" x 6'8"

Design Pressure
+40.5/-40.5
Limited water unless special threshold design is used.

Large Missile Impact Resistance
Hurricane protective system (shutters) is REQUIRED.

Actual design pressure and impact resistant requirements for a specific building design and geographic location is determined by ASCE 7-national, state or local building codes specify the edition required.

MINIMUM ASSEMBLY DETAIL:

Compliance requires that minimum assembly details have been followed – see MAD-WL-MA0001-02 and MAD-WL-MA0041-02.

MINIMUM INSTALLATION DETAIL:

Compliance requires that minimum installation details have been followed – see MID-WL-MA0001-02.

APPROVED DOOR STYLES:

1/4 GLASS:

100 Series

133, 135 Series

136 Series

680 Series

822 Series

1/2 GLASS:

105 Series*

106, 160 Series*

129 Series*

200 Series*

12 R/L, 23 R/L, 24 R/L Series*

107 Series*

108 Series

304 Series

*This glass kit may also be used in the following door styles: 5-panel; 5-panel with scroll; Eyebrow 5-panel; Eyebrow 5-panel with scroll.

XX
Opaque Inswing Unit

COP-WL-JH4102-02

WOOD-EDGE STEEL DOORS

CERTIFIED TEST REPORTS:

NCTL 210-1905-7, 8, 9, 10, 11, 12; NCTL 210-1861-4, 5, 6, 10, 11, 12;
NCTL 210-2185-1, 2, 3

Certifying Engineer and License Number: Barry D. Portney, P.E. / 16258.

Unit Tested in Accordance with Miami-Dade BCCO PA201, PA202 and PA203.

Evaluation report NCTL-210-2794-1

Door panels constructed from 26-gauge 0.017" thick steel skins. Both stiles constructed from wood. Top end rails constructed of 0.041" steel. Bottom end rails constructed of 0.021" steel. Interior cavity of slab filled with rigid polyurethane foam core.

Frame constructed of wood with an extruded aluminum threshold.

PRODUCT COMPLIANCE LABELING:

TESTED IN ACCORDANCE WITH
MIAMI-DADE BCCO
PA201, PA202 & PA203

COMPANY NAME
CITY, STATE

To the best of my knowledge and ability the above side-hinged exterior door unit conforms to the requirements of the 2001 Florida Building Code, Chapter 17 (Structural Tests and Inspections).

Kurt L Balthazor

State of Florida, Professional Engineer
Kurt Balthazor, P.E. ~ License Number 56533

Tool Data Review Certificate #3025447A and COP/Test Report Validation Matrix #3025447A-001 provides additional information - available from the ITS/WH website (www.atsweb.com), the Masonite website (www.masonite.com) or the Masonite technical center.

Johnson
EntrySystems

XX
Glazed Inswing Unit

COP-WL-JH4142-02

WOOD-EDGE STEEL DOORS

APPROVED ARRANGEMENT:

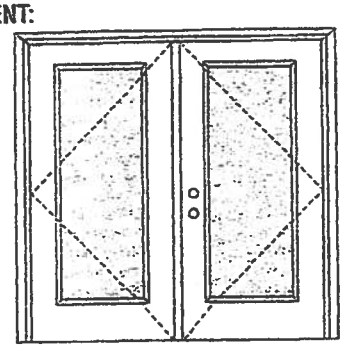

Warnock Hersey

Test Data Review Certificate #3026447A and COP/Test Report Validation Matrix #3026447A-001 provides additional information - available from the ITS/WH website (www.elisemko.com), the Masonite website (www.masonite.com) or the Masonite technical center.

Note:
Units of other sizes are covered by this report as long as the panels used do not exceed 3'0" x 6'8".

Double Door
Maximum unit size = 6'0" x 6'8"

Design Pressure
+40.5/-40.5
Limited water unless special threshold design is used.

Large Missile Impact Resistance
Hurricane protective system (shutters) is REQUIRED.

Actual design pressure and impact resistant requirements for a specific building design and geographic location is determined by ASCE 7-national, state or local building codes specify the edition required.

MINIMUM ASSEMBLY DETAIL:

Compliance requires that minimum assembly details have been followed – see MAD-WL-MA0002-02 and MAD-WL-MA0041-02.

MINIMUM INSTALLATION DETAIL:

Compliance requires that minimum installation details have been followed – see MID-WL-MA0002-02.

APPROVED DOOR STYLES:

1/4 GLASS:

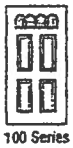
100 Series

133, 135 Series

136 Series

680 Series

822 Series

1/2 GLASS:

105 Series*

106, 160 Series*

129 Series*

200 Series*

12 R/L, 23 R/L, 24 R/L Series*

107 Series*

108 Series

304 Series

*This glass kit may also be used in the following door styles: 5-panel; 5-panel with scroll; Eyebrow 5-panel; Eyebrow 5-panel with scroll.

WOOD-EDGE STEEL DOORS

APPROVED DOOR STYLES:

3/4 GLASS:

404 Series

410 Series

450 Series

FULL GLASS:

109 Series

114, 120, 122 Series

152 Series

149 Series

300 Series

CERTIFIED TEST REPORTS:

NCTL 210-1897-7, 8, 9, 10, 11, 12; NCTL 210-1861-4, 5, 6, 10, 11, 12; NCTL 210-2185-1, 2, 3

Certifying Engineer and License Number: Barry D. Portney, P.E. / 16258.

Unit Tested in Accordance with Miami-Dade BCCO PA202.

Evaluation report NCTL-210-2794-1

Door panels constructed from 26-gauge 0.017" thick steel skins. Both stiles constructed from wood. Top end rails constructed of 0.041" steel. Bottom end rails constructed of 0.021" steel. Interior cavity of slab filled with rigid polyurethane foam core. Slab glazed with insulated glass mounted in a rigid plastic lip lite surround.

Frame constructed of wood with an extruded aluminum threshold.

PRODUCT COMPLIANCE LABELING:

TESTED IN
ACCORDANCE WITH
MIAMI-DADE BCCO PA202

COMPANY NAME
CITY, STATE

To the best of my knowledge and ability the above side-hinged exterior door unit conforms to the requirements of the 2001 Florida Building Code, Chapter 17 (Structural Tests and Inspections).

Kurt L Balthazor

State of Florida, Professional Engineer
Kurt Balthazor, P.E. – License Number 56533

Warnock Hersey

Test Data Review Certificate #3026447A and COP/Test Report Validation Matrix #3026447A-001 provides additional information - available from the ITS/WH website (www.etlsemko.com), the Masonite website (www.masonite.com) or the Masonite technical center.

Johnson™ EntrySystems

June 17, 2002

Our continuing program of product improvement makes specifications, design and product detail subject to change without notice.

PREMDOOR Collection Premium Quality Doors

Exclusively from Masonite®
Masonite International Corporation

OXO
Glazed Inswing Unit

COP-WL-JH4144-02

WOOD-EDGE STEEL DOORS

APPROVED ARRANGEMENT:

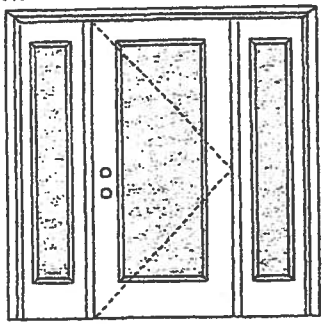

Single Door with 2 Sidelites
Maximum unit size = 9'0" x 6'8"

Warnock Hersey

Test Data Review Certificate #3026447A and COP/Test Report Validation Matrix #3026447A-001 provides additional information - available from the ITS/WH website (www.etlsemko.com), the Masonite website (www.masonite.com) or the Masonite technical center.

Note:
Units of other sizes are covered by this report as long as the panels used do not exceed 3'0" x 6'8".

Design Pressure

+40.5/-40.5

Limited water unless special threshold design is used.

Large Missile Impact Resistance

Hurricane protective system (shutters) is REQUIRED.

Actual design pressure and impact resistant requirements for a specific building design and geographic location is determined by ASCE 7-national, state or local building codes specify the edition required.

MINIMUM ASSEMBLY DETAIL:

Compliance requires that minimum assembly details have been followed – see MAD-WL-MA0004-02 or MAD-WL-MA0007-02 and MAD-WL-MA0041-02.

MINIMUM INSTALLATION DETAIL:

Compliance requires that minimum installation details have been followed – see MID-WL-MA0004-02.

APPROVED DOOR STYLES:

1/4 GLASS:

100 Series

133, 135 Series

136 Series

680 Series

822 Series

1/2 GLASS:

105 Series*

106, 160 Series*

129 Series*

200 Series*

12 R/L, 23 R/L, 24 R/L Series*

107 Series*

108 Series

304 Series

*This glass kit may also be used in the following door styles: 5-panel; 5-panel with scroll; Eyebrow 5-panel; Eyebrow 5-panel with scroll.

Johnson™ EntrySystems

June 17, 2002
Our continuing program of product improvement makes specifications, design and product detail subject to change without notice.

PREMDOR Collection Premium Quality Doors

Exclusively from Masonite®
Masonite International Corporation

OXO
Glazed Inswing Unit

COP-WL-JH4144-02

WOOD-EDGE STEEL DOORS

APPROVED DOOR STYLES:

3/4 GLASS:

404 Series

410 Series

450 Series

FULL GLASS:

109 Series

114, 120, 122 Series

152 Series

149 Series

300 Series

APPROVED SIDELITE STYLES:

680 Series

129 Series

200 Series

12R, 12L, 23R, 23L, 24R, 24L Series

450 Series

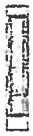
152 Series

149 Series

109 Series

120, 122 Series

300 Series

CERTIFIED TEST REPORTS:

NCTL 210-1897-7, 8, 9, 10, 11, 12; NCTL 210-1861-4, 5, 6, 10, 11, 12; NCTL 210-2185-1, 2, 3

Certifying Engineer and License Number: Barry D. Portney, P.E. / 16258.

Unit Tested in Accordance with Miami-Dade BCCO PA202.

Evaluation report NCTL-210-2794-1

Door panels constructed from 26-gauge 0.017" thick steel skins. Both stiles constructed from wood. Top end rails constructed of 0.041" steel. Bottom end rails constructed of 0.021" steel. Interior cavity of slab filled with rigid polyurethane foam core. Slab and sidelite panels glazed with insulated glass mounted in a rigid plastic lip lite surround.

Frame constructed of wood with an extruded aluminum threshold.

PRODUCT COMPLIANCE LABELING:

TESTED IN
ACCORDANCE WITH
MIAMI-DADE BCCO PA202

COMPANY NAME
CITY, STATE

To the best of my knowledge and ability the above side-hinged exterior door unit conforms to the requirements of the 2001 Florida Building Code, Chapter 17 (Structural Tests and Inspections).

Kurt L Balthazor

State of Florida, Professional Engineer
Kurt Balthazor, P.E. – License Number 56533

Warnock Hersey

Test Data Review Certificate #3026447A and COP/Test Report Validation Matrix #3026447A-001 provides additional information - available from the ITS/WH website (www.etisamko.com), the Masonite website (www.masonite.com) or the Masonite technical center.

Johnson EntrySystems

June 17, 2002

Our continuing program of product improvement makes specifications, design and product detail subject to change without notice.

PREMDOOR Collection Premium Quality Doors

Exclusively from Masonite
Masonite International Corporation

OXXO

Glazed Inswing Unit

COP-WL-JH4145-02

WOOD-EDGE STEEL DOORS

APPROVED ARRANGEMENT:

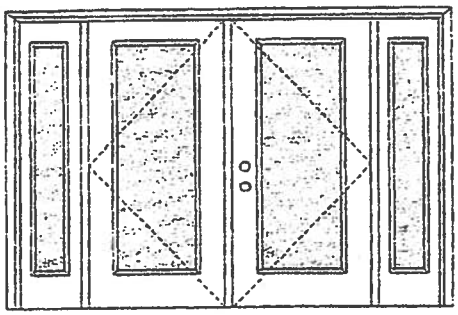

Warnock Hersey

Test Data Review Certificate #3028447A and COP/Test Report Validation Matrix #3028447A-001 provides additional information - available from the ITS/WH website (www.etlsemko.com), the Masonite website (www.masonite.com) or the Masonite technical center.

Note:
Units of other sizes are covered by this report as long as the panels used do not exceed 3'0" x 6'8".

Double Door with 2 Sidelites
Maximum unit size = 12'0" x 6'8"

Design Pressure

+40.5/-40.5

Limited water unless special threshold design is used.

Large Missile Impact Resistance

Hurricane protective system (shutters) is REQUIRED.

Actual design pressure and impact resistant requirements for a specific building design and geographic location is determined by ASCE 7-national, state or local building codes specify the edition required.

MINIMUM ASSEMBLY DETAIL:

Compliance requires that minimum assembly details have been followed – see MAD-WL-MA0005-02 or MAD-WL-MA0008-02 and MAD-WL-MA0041-02.

MINIMUM INSTALLATION DETAIL:

Compliance requires that minimum installation details have been followed – see MID-WL-MA0005-02.

APPROVED DOOR STYLES:

1/4 GLASS:

100 Series

133, 135 Series

136 Series

680 Series

822 Series

1/2 GLASS:

105 Series*

106, 160 Series*

129 Series*

200 Series*

12 R/L, 23 R/L, 24 R/L Series*

107 Series*

108 Series

304 Series

*This glass kit may also be used in the following door styles: 5-panel; 5-panel with scroll; Eyebrow 5-panel; Eyebrow 5-panel with scroll.

Johnson™

XX
Opaque Inswing Unit

COP-WL-JH4102-02

WOOD-EDGE STEEL DOORS

APPROVED ARRANGEMENT:

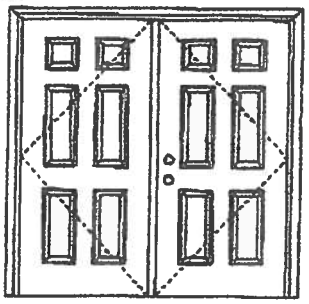

Test Data Review Certificate #3026447A and COP/Test Report Validation Matrix #3026447A-001 provides additional information - available from the ITS/WH website (www.atlasweb.com), the Masonite website (www.masonite.com) or the Masonite technical center.

Note:
Units of other sizes are covered by this report as long as the panels used do not exceed 3'0" x 6'8".

Double Door
Maximum pair size = 6'0" x 6'8"

Design Pressure
+45.0/-45.0
Limited water unless special threshold design is used.

Large Missile Impact Resistance
Hurricane protective system (shutters) is NOT REQUIRED.

Actual design pressure and impact resistance requirements for a specific building design and geographic location is determined by ASCE 7-national, state or local building codes specify the edition required.

MINIMUM ASSEMBLY DETAIL:

Compliance requires that minimum assembly details have been followed – see MAD-WL-MA0002-02.

MINIMUM INSTALLATION DETAIL:

Compliance requires that minimum installation details have been followed – see MID-WL-MA0002-02.

APPROVED DOOR STYLES:

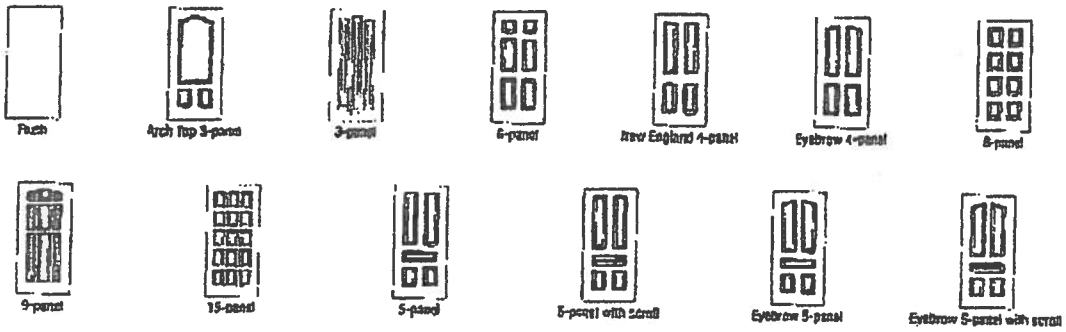

Johnson EntrySystems

June 17, 2002
Our continuing program of product improvement may cause specifications, dimensions and products to change without notice.

PREMIDOOR Collection Premium Quality Doors

Masonite
Masonite International Corporation

WOOD-EDGE STEEL DOORS

APPROVED DOOR STYLES:

3/4 GLASS:

404 Series

410 Series

450 Series

FULL GLASS:

109 Series

114, 120, 122 Series

152 Series

149 Series

300 Series

CERTIFIED TEST REPORTS:

NCTL 210-1897-7, 8, 9, 10, 11, 12; NCTL 210-1861-4, 5, 6, 10, 11, 12; NCTL 210-2185-1, 2, 3

Certifying Engineer and License Number: Barry D. Portney, P.E. / 16258.

Unit Tested in Accordance with Miami-Dade BCCO PA202.

Evaluation report NCTL-210-2794-1

Door panels constructed from 26-gauge 0.017" thick steel skins. Both stiles constructed from wood. Top end rails constructed of 0.041" steel. Bottom end rails constructed of 0.021" steel. Interior cavity of slab filled with rigid polyurethane foam core. Slab glazed with insulated glass mounted in a rigid plastic lip lite surround.

Frame constructed of wood with an extruded aluminum threshold.

PRODUCT COMPLIANCE LABELING:

TESTED IN
ACCORDANCE WITH
MIAMI-DADE BCCO PA202

COMPANY NAME
CITY, STATE

To the best of my knowledge and ability the above side-hinged exterior door unit conforms to the requirements of the 2001 Florida Building Code, Chapter 17 (Structural Tests and Inspections).

Kurt L Balthazor

State of Florida, Professional Engineer
Kurt Balthazor, P.E. – License Number 56533

Warnock Hersey

Test Data Review Certificate #3026447A and COP/Test Report Validation Matrix #3026447A-001 provides additional information - available from the ITS/WH website (www.etlsemko.com), the Masonite website (www.masonite.com) or the Masonite technical center.

Johnson™ EntrySystems

June 17, 2002

Our continuing program of product improvement makes specifications, design and product detail subject to change without notice.

PREMDOR Collection Premium Quality Doors

Exclusively from Masonite®
Masonite International Corporation

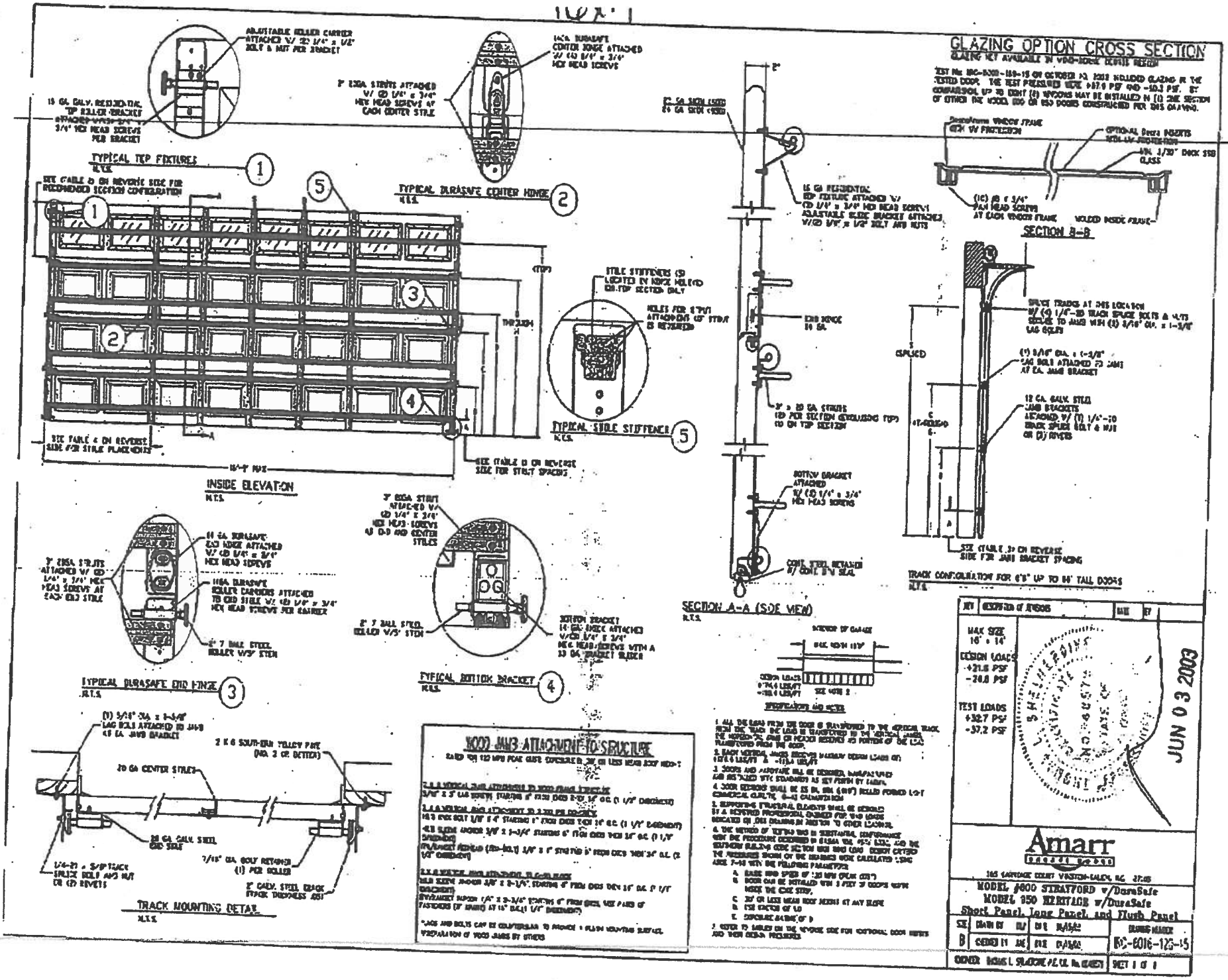
GLAZING OPTION CROSS SECTION
TYPICAL TOP FIXTURES
TYPICAL DURASAFE CENTER HINGE
INSIDE ELEVATION
TYPICAL STILE STIFFENER
TYPICAL DURASAFE END HINGE
TYPICAL BOTTOM BRACKET
SECTION A-A (SIDE VIEW)
SECTION B-B
TRACK CONFIGURATION FOR 6'8" UP TO 8' TALL DOORS
TRACK MOUNTING DETAIL
WOOD JAMB ATTACHMENT TO STRUCTURE
MAX SIZE 16' x 14'
DESIGN LOADS +21.6 PSF -20.8 PSF
TEST LOADS +32.7 PSF -37.2 PSF
JUN 03 2003
Amarr
MODEL 4800 STRATFORD w/DuraSafe
MODEL 950 HERITAGE w/DuraSafe
Short Panel, Long Panel, and Flush Panel
B
BC-6016-125-15

TABLE 1

DOOR HEIGHT	STRUT SPACING (BASED ON RECOMMENDED SECTION CONFIGURATION)														TOP
	A	B	C	D	E	F	G	H	I	J	K	L	M	N	T
6'6"	5 1/2"	13 1/4"	25 1/2"	38 3/4"	43 1/2"	54 1/4"									67 1/2"
7'0"	5 1/2"	13 1/4"	25 1/2"	38 3/4"	45 1/2"	55 1/4"									72 1/2"
7'6"	5 1/2"	13 1/4"	22 1/2"	38 3/4"	40 1/2"	51 1/4"	58 1/2"	66 1/4"							
8'0"	5 1/2"	13 1/4"	25 1/2"	38 3/4"	43 1/2"	54 1/4"	61 1/2"	72 1/4"							85 1/2"
8'6"	5 1/2"	13 1/4"	25 1/2"	38 3/4"	43 1/2"	54 1/4"	61 1/2"	72 1/4"	79 1/2"						91 1/2"
9'0"	5 1/2"	13 1/4"	22 1/2"	38 3/4"	40 1/2"	51 1/4"	58 1/2"	69 1/4"	76 1/2"	87 1/4"					98"
9'6"	5 1/2"	13 1/4"	25 1/2"	38 3/4"	43 1/2"	54 1/4"	61 1/2"	72 1/4"	79 1/2"	90 1/4"					104 1/2"
10'0"	5 1/2"	13 1/4"	25 1/2"	38 3/4"	43 1/2"	54 1/4"	61 1/2"	72 1/4"	79 1/2"	90 1/4"	95 1/2"				108 1/2"
10'6"	5 1/2"	13 1/4"	25 1/2"	38 3/4"	43 1/2"	54 1/4"	61 1/2"	72 1/4"	79 1/2"	90 1/4"	95 1/2"	108 1/2"			115 1/2"
11'0"	5 1/2"	13 1/4"	25 1/2"	38 3/4"	43 1/2"	54 1/4"	61 1/2"	72 1/4"	79 1/2"	90 1/4"	95 1/2"	108 1/2"	121 1/2"		
11'6"	5 1/2"	13 1/4"	25 1/2"	38 3/4"	43 1/2"	54 1/4"	61 1/2"	72 1/4"	79 1/2"	90 1/4"	95 1/2"	108 1/2"	121 1/2"	134 1/2"	
12'0"	5 1/2"	13 1/4"	25 1/2"	38 3/4"	43 1/2"	54 1/4"	61 1/2"	72 1/4"	79 1/2"	90 1/4"	95 1/2"	108 1/2"	121 1/2"	134 1/2"	147 1/2"
12'6"	5 1/2"	13 1/4"	25 1/2"	38 3/4"	43 1/2"	54 1/4"	61 1/2"	72 1/4"	79 1/2"	90 1/4"	95 1/2"	108 1/2"	121 1/2"	134 1/2"	147 1/2"
13'0"	5 1/2"	13 1/4"	25 1/2"	38 3/4"	43 1/2"	54 1/4"	61 1/2"	72 1/4"	79 1/2"	90 1/4"	95 1/2"	108 1/2"	121 1/2"	134 1/2"	147 1/2"
13'6"	5 1/2"	13 1/4"	25 1/2"	38 3/4"	43 1/2"	54 1/4"	61 1/2"	72 1/4"	79 1/2"	90 1/4"	95 1/2"	108 1/2"	121 1/2"	134 1/2"	147 1/2"
14'0"	5 1/2"	13 1/4"	25 1/2"	38 3/4"	43 1/2"	54 1/4"	61 1/2"	72 1/4"	79 1/2"	90 1/4"	95 1/2"	108 1/2"	121 1/2"	134 1/2"	147 1/2"

TABLE 2

DOOR HEIGHT	SECTION HEIGHTS							
	#1	#2	#3	#4	#5	#6	#7	#8
13'6"	21"	21"	21"	21"	21"	19"	18"	21"
12'6"	21"	18"	19"	19"	18"	18"	19"	21"
11'6"	21"	21"	21"	19"	18"	18"	21"	
10'6"	21"	21"	21"	21"	21"	21"		
9'6"	21"	18"	18"	18"	19"	21"		
8'6"	21"	21"	21"	18"	21"			
7'6"	18"	19"	18"	19"	18"			
6'6"	21"	18"	18"	21"				

TABLE 3

DOOR HEIGHT	TRACK ATTACHMENT							SPLICE
	A	B	C	D	E	F	G	S
7'	10"	38"	56"					75"
8'	10"	34"	58"	82"				93"
9'	17"	34"	58"	82"				100"
10'	10"	34"	58"	82"	105"			112"
11'	10"	34"	58"	82"	106"			124"
12'	10"	34"	58"	82"	106"	130"		136"
13'	10"	34"	58"	82"	106"	130"		148"
14'	19"	34"	58"	82"	106"	130"	154"	160"

TABLE 4

Section Width (ft)	Panel Type	Center Stile Locations (Measured from Left Edge) 1st (in)	2nd (in)	3rd (in)	4th (in)	5th (in)
10'0"	Short	48.406	79.594			
10'0"	Long	30.000	60.000	90.000		
12'0"	Short	48.812	72.000	96.375		
12'0"	Long	49.625	72.000	94.375		
12'2"	Short	49.636	73.000	96.364		
12'2"	Long	50.084	73.000	95.915		
12'4"	Short	50.636	74.000	97.364		
12'4"	Long	51.084	74.000	96.916		
12'6"	Short	50.670	75.000	99.330		
12'6"	Long	51.170	75.000	98.830		
12'8"	Short	51.670	76.000	100.330		
12'8"	Long	52.100	76.000	99.900		
12'10"	Short	52.250	77.000	101.750		
12'10"	Long	53.100	77.000	100.900		
13'0"	Short	53.000	78.000	103.000		
13'0"	Long	54.100	78.000	102.900		
13'2"	Short	54.000	79.000	104.000		
13'2"	Long	55.100	79.000	102.900		
13'4"	Short	54.400	80.000	105.600		
13'4"	Long	54.900	80.000	105.100		
13'6"	Short	55.400	81.000	106.600		
13'6"	Long	55.900	81.000	106.100		
13'8"	Short	55.400	82.000	107.600		
13'8"	Long	56.925	82.000	107.375		
13'10"	Short	57.163	82.931	108.837		
13'10"	Long	57.170	83.000	108.830		
14'0"	Short	57.163	83.931	110.837		
14'0"	Long	58.625	84.000	109.375		
14'2"	Short	58.148	84.931	111.852		
14'2"	Long	59.170	85.000	110.830		
14'4"	Short	58.163	85.931	112.837		
14'4"	Long	60.170	85.000	111.830		
14'6"	Short	59.163	86.931	113.837		
14'6"	Long	61.170	87.000	112.830		
14'8"	Short	60.563	87.931	114.437		
14'8"	Long	44.812	*66.406	88.000	*109.594	131.188
14'10"	Short	61.285	[illegible]	[illegible]	[illegible]	[illegible]
14'10"	Long	45.600	*67.300	89.000	*110.700	132.400
15'0"	Short	61.800	[illegible]	[illegible]	[illegible]	[illegible]
15'0"	Long	46.500	*68.300	90.000	*111.700	133.400
15'2"	Short	62.463	[illegible]	[illegible]	[illegible]	[illegible]
15'2"	Long	47.600	*69.300	91.000	*112.700	134.400
15'4"	Short	63.400	[illegible]	[illegible]	[illegible]	[illegible]
15'4"	Long	47.250	*69.625	92.000	*114.375	136.750
15'6"	Short	63.624	[illegible]	[illegible]	[illegible]	[illegible]
15'6"	Long	47.600	*70.300	93.000	*115.700	138.400
15'8"	Short	47.624	[illegible]	[illegible]	[illegible]	[illegible]
15'8"	Long	48.600	*71.300	94.000	*116.700	139.400
15'10"	Short	48.624	[illegible]	[illegible]	[illegible]	[illegible]
15'10"	Long	49.167	*72.084	95.000	*117.917	140.833
16'0"	Short	49.624	[illegible]	[illegible]	[illegible]	[illegible]
16'0"	Long	50.600	*73.300	95.000	*118.700	141.400

* Stiles do not need to be hinged

TABLE 5

Section Width (ft)	Panel Type	Max Design Loads Allowed Positive (PSF)	Negative (PSF)
10'0"	Short	29.4	29.4
10'0"	Long	34.7	39.5
12'0"	Short	28.9	32.9
12'0"	Long	28.9	32.9
12'2"	Short	28.5	32.5
12'2"	Long	28.5	32.5
12'4"	Short	28.1	32.0
12'4"	Long	28.1	32.0
12'6"	Short	27.8	31.6
12'6"	Long	27.8	31.6
12'8"	Short	27.4	31.2
12'8"	Long	27.4	31.2
12'10"	Short	27.0	30.8
12'10"	Long	27.0	30.8
13'0"	Short	26.7	30.4
13'0"	Long	26.7	30.4
13'2"	Short	26.4	30.0
13'2"	Long	26.4	30.0
13'4"	Short	26.0	29.6
13'4"	Long	26.0	29.6
13'6"	Short	25.7	29.2
13'6"	Long	25.7	29.2
13'8"	Short	25.4	28.9
13'8"	Long	25.4	28.9
13'10"	Short	25.1	28.5
13'10"	Long	25.1	28.5
14'0"	Short	24.8	28.2
14'0"	Long	24.8	28.2
14'2"	Short	24.5	27.8
14'2"	Long	24.5	27.8
14'4"	Short	24.2	27.5
14'4"	Long	24.2	27.5
14'6"	Short	23.9	27.2
14'6"	Long	23.9	27.2
14'8"	Short	23.7	26.9
14'8"	Long	23.7	26.9
14'10"	Short	23.4	26.6
14'10"	Long	23.4	26.6
15'0"	Short	23.1	26.3
15'0"	Long	23.1	26.3
15'2"	Short	22.9	26.0
15'2"	Long	22.9	26.0
15'4"	Short	22.6	25.7
15'4"	Long	22.6	25.7
15'6"	Short	22.4	25.5
15'6"	Long	22.4	25.5
15'8"	Short	22.2	25.2
15'8"	Long	22.2	25.2
15'10"	Short	22.0	25.0
15'10"	Long	21.9	24.9
16'0"	Short	21.8	24.8
16'0"	Long	21.8	24.8

LX01

Residential System Sizing Calculation

Summary

Russell, Shane Residence
128 SW Kinwood Court
Lake City, FL 32025-

Project Title:
704034EdgleyConstruction

Class 3 Rating
Registration No. 0
Climate: North

4/4/2007

Location for weather data: Gainesville - Defaults: Latitude(29) Altitude(152 ft.) Temp Range(M)					
Humidity data: Interior RH (50%) Outdoor wet bulb (77F) Humidity difference(54gr.)					
Winter design temperature	33	F	Summer design temperature	92	F
Winter setpoint	70	F	Summer setpoint	75	F
Winter temperature difference	37	F	Summer temperature difference	17	F
Total heating load calculation	**29742**	**Btuh**	**Total cooling load calculation**	**24791**	**Btuh**
Submitted heating capacity	% of calc	Btuh	Submitted cooling capacity	% of calc	Btuh
Total (Electric Heat Pump)	114.3	34000	Sensible (SHR = 0.75)	128.8	25500
Heat Pump + Auxiliary(0.0kW)	114.3	34000	Latent	170.1	8500
			Total (Electric Heat Pump)	137.1	34000

WINTER CALCULATIONS

Winter Heating Load (for 1856 sqft)

Load component			Load	
Window total	211	sqft	6802	Btuh
Wall total	1185	sqft	3891	Btuh
Door total	60	sqft	777	Btuh
Ceiling total	1958	sqft	2307	Btuh
Floor total	182	sqft	7946	Btuh
Infiltration	198	cfm	8019	Btuh
Duct loss			0	Btuh
Subtotal			**29742**	**Btuh**
Ventilation	0	cfm	0	Btuh
TOTAL HEAT LOSS			**29742**	**Btuh**

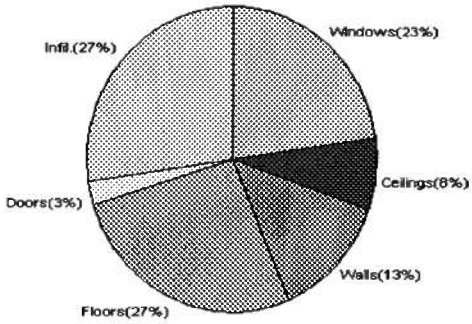

SUMMER CALCULATIONS

Summer Cooling Load (for 1856 sqft)

Load component			Load	
Window total	211	sqft	10262	Btuh
Wall total	1185	sqft	2386	Btuh
Door total	60	sqft	588	Btuh
Ceiling total	1958	sqft	3243	Btuh
Floor total			0	Btuh
Infiltration	104	cfm	1934	Btuh
Internal gain			1380	Btuh
Duct gain			0	Btuh
Sens. Ventilation	0	cfm	0	Btuh
Total sensible gain			**19792**	**Btuh**
Latent gain(ducts)			0	Btuh
Latent gain(infiltration)			3798	Btuh
Latent gain(ventilation)			0	Btuh
Latent gain(internal/occupants/other)			1200	Btuh
Total latent gain			**4998**	**Btuh**
TOTAL HEAT GAIN			**24791**	**Btuh**

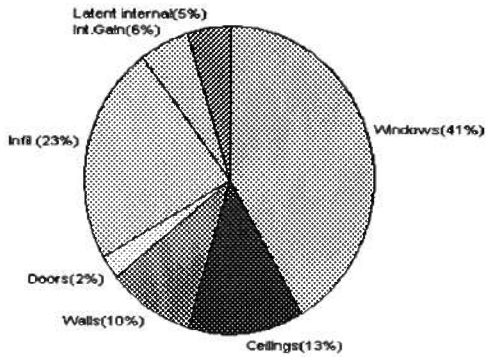

For Florida residences only

EnergyGauge® System Sizing
PREPARED BY: Ryan
DATE: 4-4-07

System Sizing Calculations - Winter

Residential Load - Whole House Component Details

Russell, Shane Residence
128 SW Kinwood Court
Lake City, FL 32025-

Project Title:
704034EdgleyConstruction

Class 3 Rating
Registration No. 0
Climate: North

Reference City: Gainesville (Defaults) Winter Temperature Difference: 37.0 F

4/4/2007

This calculation is for Worst Case. The house has been rotated 315 degrees.

Component Loads for Whole House

Window	Panes/SHGC/Frame/U	Orientation	Area(sqft) X	HTM=	Load
1	2, Clear, Metal, 0.87	NW	20.0	32.2	644 Btuh
2	2, Clear, Metal, 0.87	NW	30.0	32.2	966 Btuh
3	2, Clear, Metal, 0.87	W	20.0	32.2	644 Btuh
4	2, Clear, Metal, 0.87	NW	60.0	32.2	1931 Btuh
5	2, Clear, Metal, 0.87	NE	4.0	32.2	129 Btuh
6	2, Clear, Metal, 0.87	SE	30.0	32.2	966 Btuh
7	2, Clear, Metal, 0.87	SE	13.3	32.2	428 Btuh
8	2, Clear, Metal, 0.87	SE	30.0	32.2	966 Btuh
9	2, Clear, Metal, 0.87	SW	4.0	32.2	129 Btuh
	Window Total		211(sqft)		6802 Btuh
Walls	Type	R-Value	Area X	HTM=	Load
1	Frame - Wood - Ext(0.09)	13.0	1037	3.3	3405 Btuh
2	Frame - Wood - Adj(0.09)	13.0	148	3.3	486 Btuh
	Wall Total		1185		3891 Btuh
Doors	Type		Area X	HTM=	Load
1	Insulated - Adjacent		20	12.9	259 Btuh
2	Insulated - Exterior		20	12.9	259 Btuh
3	Insulated - Exterior		20	12.9	259 Btuh
	Door Total		60		777Btuh
Ceilings	Type/Color/Surface	R-Value	Area X	HTM=	Load
1	Vented Attic/D/Shin)	30.0	1958	1.2	2307 Btuh
	Ceiling Total		1958		2307Btuh
Floors	Type	R-Value	Size X	HTM=	Load
1	Slab On Grade	0	182.0 ft(p)	43.7	7946 Btuh
	Floor Total		182		7946 Btuh
			Zone Envelope Subtotal:		21723 Btuh
Infiltration	Type	ACH X	Zone Volume	CFM=	
	Natural	0.80	14848	198.0	8019 Btuh
Ductload	Average sealed, R6.0, Supply(Attic), Return(Attic)			(DLM of 0.00)	0 Btuh
Zone #1			**Sensible Zone Subtotal**		**29742 Btuh**

Manual J Winter Calculations

Residential Load - Component Details (continued)

Russell, Shane Residence
128 SW Kinwood Court
Lake City, FL 32025-

Project Title:
704034EdgleyConstruction

Class 3 Rating
Registration No. 0
Climate: North

4/4/2007

WHOLE HOUSE TOTALS

	Subtotal Sensible	29742 Btuh
	Ventilation Sensible	0 Btuh
	Total Btuh Loss	29742 Btuh

Key: Window types (SHGC - Shading coefficient of glass as SHGC numerical value or as clear or tint)
(Frame types - metal, wood or insulated metal)
(U - Window U-Factor or 'DEF' for default)
(HTM - ManualJ Heat Transfer Multiplier)
Key: Floor size (perimeter(p) for slab-on-grade or area for all other floor types)

For Florida residences only

System Sizing Calculations - Winter

Residential Load - Room by Room Component Details

Russell, Shane Residence
128 SW Kinwood Court
Lake City, FL 32025-

Project Title:
704034EdgleyConstruction

Class 3 Rating
Registration No. 0
Climate: North

Reference City: Gainesville (Defaults) Winter Temperature Difference: 37.0 F

4/4/2007

This calculation is for Worst Case. The house has been rotated 315 degrees.

Component Loads for Zone #1: Main

Window	Panes/SHGC/Frame/U	Orientation	Area(sqft) X	HTM=	Load
1	2, Clear, Metal, 0.87	NW	20.0	32.2	644 Btuh
2	2, Clear, Metal, 0.87	NW	30.0	32.2	966 Btuh
3	2, Clear, Metal, 0.87	W	20.0	32.2	644 Btuh
4	2, Clear, Metal, 0.87	NW	60.0	32.2	1931 Btuh
5	2, Clear, Metal, 0.87	NE	4.0	32.2	129 Btuh
6	2, Clear, Metal, 0.87	SE	30.0	32.2	966 Btuh
7	2, Clear, Metal, 0.87	SE	13.3	32.2	428 Btuh
8	2, Clear, Metal, 0.87	SE	30.0	32.2	966 Btuh
9	2, Clear, Metal, 0.87	SW	4.0	32.2	129 Btuh
	Window Total		211(sqft)		6802 Btuh
Walls	Type	R-Value	Area X	HTM=	Load
1	Frame - Wood - Ext(0.09)	13.0	1037	3.3	3405 Btuh
2	Frame - Wood - Adj(0.09)	13.0	148	3.3	486 Btuh
	Wall Total		1185		3891 Btuh
Doors	Type		Area X	HTM=	Load
1	Insulated - Adjacent		20	12.9	259 Btuh
2	Insulated - Exterior		20	12.9	259 Btuh
3	Insulated - Exterior		20	12.9	259 Btuh
	Door Total		60		777Btuh
Ceilings	Type/Color/Surface	R-Value	Area X	HTM=	Load
1	Vented Attic/D/Shin)	30.0	1958	1.2	2307 Btuh
	Ceiling Total		1958		2307Btuh
Floors	Type	R-Value	Size X	HTM=	Load
1	Slab On Grade	0	182.0 ft(p)	43.7	7946 Btuh
	Floor Total		182		7946 Btuh
			Zone Envelope Subtotal:		21723 Btuh
Infiltration	Type	ACH X	Zone Volume	CFM=	
	Natural	0.80	14848	198.0	8019 Btuh
Ductload	Average sealed, R6.0, Supply(Attic), Return(Attic)			(DLM of 0.00)	0 Btuh
Zone #1			**Sensible Zone Subtotal**		**29742 Btuh**

Manual J Winter Calculations

Residential Load - Component Details (continued)

Russell, Shane Residence
128 SW Kinwood Court
Lake City, FL 32025-

Project Title:
704034EdgleyConstruction

Class 3 Rating
Registration No. 0
Climate: North

4/4/2007

WHOLE HOUSE TOTALS

	Subtotal Sensible	29742 Btuh
	Ventilation Sensible	0 Btuh
	Total Btuh Loss	29742 Btuh

Key: Window types (SHGC - Shading coefficient of glass as SHGC numerical value or as clear or tint)
(Frame types - metal, wood or insulated metal)
(U - Window U-Factor or 'DEF' for default)
(HTM - ManualJ Heat Transfer Multiplier)
Key: Floor size (perimeter(p) for slab-on-grade or area for all other floor types)

For Florida residences only

System Sizing Calculations - Summer

Residential Load - Whole House Component Details

Russell, Shane Residence
128 SW Kinwood Court
Lake City, FL 32025-

Project Title:
704034EdgleyConstruction

Class 3 Rating
Registration No. 0
Climate: North

Reference City: Gainesville (Defaults) Summer Temperature Difference: 17.0 F 4/4/2007

This calculation is for Worst Case. The house has been rotated 315 degrees.

Component Loads for Whole House

Window	Type* Pn/SHGC/U/InSh/ExSh/IS	Ornt	Overhang Len	Overhang Hgt	Window Area(sqft) Gross	Shaded	Unshaded	HTM Shaded	HTM Unshaded	Load
1	2, Clear, 0.87, None,N,N	NW	8ft.	5.5ft.	20.0	0.0	20.0	29	60	1201 Btuh
2	2, Clear, 0.87, None,N,N	NW	8ft.	5.5ft.	30.0	0.0	30.0	29	60	1801 Btuh
3	2, Clear, 0.87, None,N,N	W	8ft.	5.5ft.	20.0	20.0	0.0	29	80	579 Btuh
4	2, Clear, 0.87, None,N,N	NW	1.5ft.	5.5ft.	60.0	0.0	60.0	29	60	3602 Btuh
5	2, Clear, 0.87, None,N,N	NE	1.5ft.	1.5ft.	4.0	0.0	4.0	29	60	240 Btuh
6	2, Clear, 0.87, None,N,N	SE	7ft.	5.5ft.	30.0	30.0	0.0	29	63	869 Btuh
7	2, Clear, 0.87, None,N,N	SE	7ft.	7.33	13.3	13.3	0.0	29	63	385 Btuh
8	2, Clear, 0.87, None,N,N	SE	1.5ft.	5.5ft.	30.0	12.1	17.9	29	63	1468 Btuh
9	2, Clear, 0.87, None,N,N	SW	1.5ft.	1.5ft.	4.0	4.0	0.0	29	63	116 Btuh
	Window Total				211 (sqft)					10262 Btuh

Walls	Type	R-Value/U-Value	Area(sqft)	HTM	Load
1	Frame - Wood - Ext	13.0/0.09	1036.7	2.1	2162 Btuh
2	Frame - Wood - Adj	13.0/0.09	148.0	1.5	223 Btuh
	Wall Total		1185 (sqft)		2386 Btuh

Doors	Type	Area (sqft)	HTM	Load
1	Insulated - Adjacent	20.0	9.8	196 Btuh
2	Insulated - Exterior	20.0	9.8	196 Btuh
3	Insulated - Exterior	20.0	9.8	196 Btuh
	Door Total	60 (sqft)		588 Btuh

Ceilings	Type/Color/Surface	R-Value	Area(sqft)	HTM	Load
1	Vented Attic/DarkShingle	30.0	1958.0	1.7	3243 Btuh
	Ceiling Total		1958 (sqft)		3243 Btuh

Floors	Type	R-Value	Size	HTM	Load
1	Slab On Grade	0.0	182 (ft(p))	0.0	0 Btuh
	Floor Total		182.0 (sqft)		0 Btuh

	Zone Envelope Subtotal:	16478 Btuh

Infiltration	Type	ACH	Volume(cuft)	CFM=	Load
	SensibleNatural	0.42	14848	103.9	1934 Btuh

Internal gain	Occupants	Btuh/occupant	Appliance	Load
	6	X 230 +	0	1380 Btuh

Duct load	Average sealed, R6.0, Supply(Attic), Return(Attic) DGM = 0.00	0.0 Btuh
	Sensible Zone Load	**19792 Btuh**

Manual J Summer Calculations

Residential Load - Component Details (continued)

Russell, Shane Residence
128 SW Kinwood Court
Lake City, FL 32025-

Project Title:
704034EdgleyConstruction

Class 3 Rating
Registration No. 0
Climate: North

4/4/2007

WHOLE HOUSE TOTALS

Whole House Totals for Cooling	**Sensible Envelope Load All Zones**	**19792**	**Btuh**
	Sensible Duct Load	0	Btuh
	Total Sensible Zone Loads	**19792**	**Btuh**
	Sensible ventilation	0	Btuh
	Blower	0	Btuh
	Total sensible gain	**19792**	**Btuh**
	Latent infiltration gain (for 54 gr. humidity difference)	3798	Btuh
	Latent ventilation gain	0	Btuh
	Latent duct gain	0	Btuh
	Latent occupant gain (6 people @ 200 Btuh per person)	1200	Btuh
	Latent other gain	0	Btuh
	Latent total gain	**4998**	**Btuh**
	TOTAL GAIN	**24791**	**Btuh**

*Key: Window types (Pn - Number of panes of glass)
(SHGC - Shading coefficient of glass as SHGC numerical value or as clear or tint)
(U - Window U-Factor or 'DEF' for default)
(InSh - Interior shading device: none(N), Blinds(B), Draperies(D) or Roller Shades(R))
(ExSh - Exterior shading device: none(N) or numerical value)
(BS - Insect screen: none(N), Full(F) or Half(H))
(Ornt - compass orientation)

For Florida residences only

System Sizing Calculations - Summer

Residential Load - Room by Room Component Details

Russell, Shane Residence
128 SW Kinwood Court
Lake City, FL 32025-

Project Title:
704034EdgleyConstruction

Class 3 Rating
Registration No. 0
Climate: North

Reference City: Gainesville (Defaults) Summer Temperature Difference: 17.0 F 4/4/2007

This calculation is for Worst Case. The house has been rotated 315 degrees.

Component Loads for Zone #1: Main

Window	Type* Pn/SHGC/U/InSh/ExSh/IS	Ornt	Overhang Len	Overhang Hgt	Window Area(sqft) Gross	Shaded	Unshaded	HTM Shaded	HTM Unshaded	Load
1	2, Clear, 0.87, None,N,N	NW	8ft.	5.5ft.	20.0	0.0	20.0	29	60	1201 Btuh
2	2, Clear, 0.87, None,N,N	NW	8ft.	5.5ft.	30.0	0.0	30.0	29	60	1801 Btuh
3	2, Clear, 0.87, None,N,N	W	8ft.	5.5ft.	20.0	20.0	0.0	29	80	579 Btuh
4	2, Clear, 0.87, None,N,N	NW	1.5ft.	5.5ft.	60.0	0.0	60.0	29	60	3602 Btuh
5	2, Clear, 0.87, None,N,N	NE	1.5ft.	1.5ft.	4.0	0.0	4.0	29	60	240 Btuh
6	2, Clear, 0.87, None,N,N	SE	7ft.	5.5ft.	30.0	30.0	0.0	29	63	869 Btuh
7	2, Clear, 0.87, None,N,N	SE	7ft.	7.33	13.3	13.3	0.0	29	63	385 Btuh
8	2, Clear, 0.87, None,N,N	SE	1.5ft.	5.5ft.	30.0	12.1	17.9	29	63	1468 Btuh
9	2, Clear, 0.87, None,N,N	SW	1.5ft.	1.5ft.	4.0	4.0	0.0	29	63	116 Btuh
	Window Total				211 (sqft)					10262 Btuh

Walls	Type	R-Value/U-Value	Area(sqft)	HTM	Load
1	Frame - Wood - Ext	13.0/0.09	1036.7	2.1	2162 Btuh
2	Frame - Wood - Adj	13.0/0.09	148.0	1.5	223 Btuh
	Wall Total		1185 (sqft)		2386 Btuh

Doors	Type	Area (sqft)	HTM	Load
1	Insulated - Adjacent	20.0	9.8	196 Btuh
2	Insulated - Exterior	20.0	9.8	196 Btuh
3	Insulated - Exterior	20.0	9.8	196 Btuh
	Door Total	60 (sqft)		588 Btuh

Ceilings	Type/Color/Surface	R-Value	Area(sqft)	HTM	Load
1	Vented Attic/DarkShingle	30.0	1958.0	1.7	3243 Btuh
	Ceiling Total		1958 (sqft)		3243 Btuh

Floors	Type	R-Value	Size	HTM	Load
1	Slab On Grade	0.0	182 (ft(p))	0.0	0 Btuh
	Floor Total		182.0 (sqft)		0 Btuh

	Zone Envelope Subtotal:	16478 Btuh

Infiltration	Type	ACH	Volume(cuft)	CFM=	Load
	SensibleNatural	0.42	14848	103.9	1934 Btuh

Internal gain	Occupants	Btuh/occupant	Appliance	Load
	6	X 230 +	0	1380 Btuh

Duct load	Average sealed, R6.0, Supply(Attic), Return(Attic) DGM = 0.00	0.0 Btuh
	Sensible Zone Load	**19792 Btuh**

Manual J Summer Calculations

Residential Load - Component Details (continued)

Russell, Shane Residence
128 SW Kinwood Court
Lake City, FL 32025-

Project Title:
704034EdgleyConstruction

Class 3 Rating
Registration No. 0
Climate: North

4/4/2007

WHOLE HOUSE TOTALS

Whole House Totals for Cooling	**Sensible Envelope Load All Zones**	**19792**	**Btuh**
	Sensible Duct Load	0	Btuh
	Total Sensible Zone Loads	**19792**	**Btuh**
	Sensible ventilation	0	Btuh
	Blower	0	Btuh
	Total sensible gain	**19792**	**Btuh**
	Latent infiltration gain (for 54 gr. humidity difference)	3798	Btuh
	Latent ventilation gain	0	Btuh
	Latent duct gain	0	Btuh
	Latent occupant gain (6 people @ 200 Btuh per person)	1200	Btuh
	Latent other gain	0	Btuh
	Latent total gain	**4998**	**Btuh**
	TOTAL GAIN	**24791**	**Btuh**

*Key: Window types (Pn - Number of panes of glass)
(SHGC - Shading coefficient of glass as SHGC numerical value or as clear or tint)
(U - Window U-Factor or 'DEF' for default)
(InSh - Interior shading device: none(N), Blinds(B), Draperies(D) or Roller Shades(R))
(ExSh - Exterior shading device: none(N) or numerical value)
(BS - Insect screen: none(N), Full(F) or Half(H))
(Ornt - compass orientation)

For Florida residences only

Residential Window Diversity

MidSummer

Russell, Shane Residence
128 SW Kinwood Court
Lake City, FL 32025-

Project Title:
704034EdgleyConstruction

Class 3 Rating
Registration No. 0
Climate: North

4/4/2007

Weather data for: Gainesville - Defaults

Summer design temperature	92 F	Average window load for July	8710 Btuh
Summer setpoint	75 F	Peak window load for July	14223 Btu
Summer temperature difference	17 F	Excusion limit(130% of Ave.)	11323 Btu
Latitude	29 North	Window excursion (July)	2900 Btuh

WINDOW Average and Peak Loads

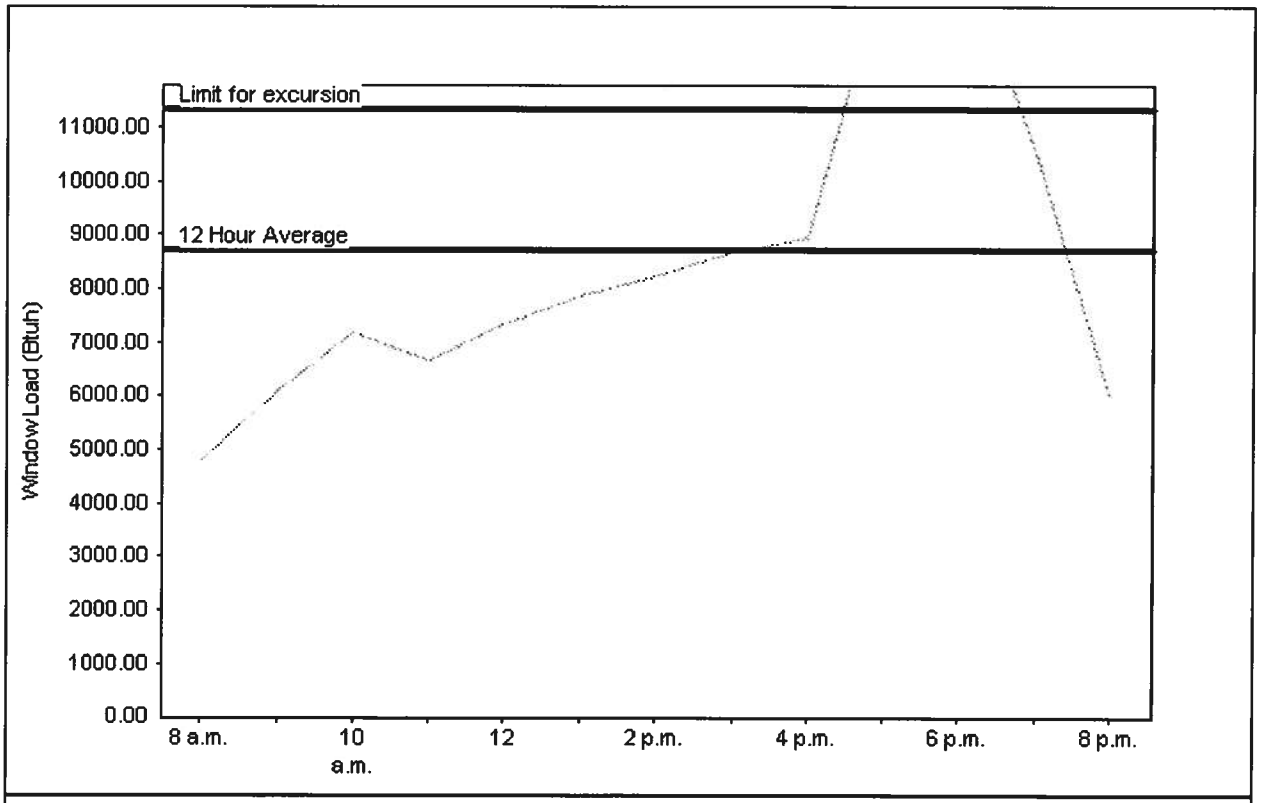

Total July Window Load(Radiation and conduction)

This application has glass areas that produce large heat gains for part of the day. Variable air volume devices are required to overcome spikes in solar gain for one or more rooms. Install a zoned system or provide zone control for problem rooms. Single speed equipment may not be suitable for the application.

EnergyGauge® System Sizing for Florida residences only
PREPARED BY: [signature]
DATE: 4-4-07

EnergyGauge® FLR2PB v4.1

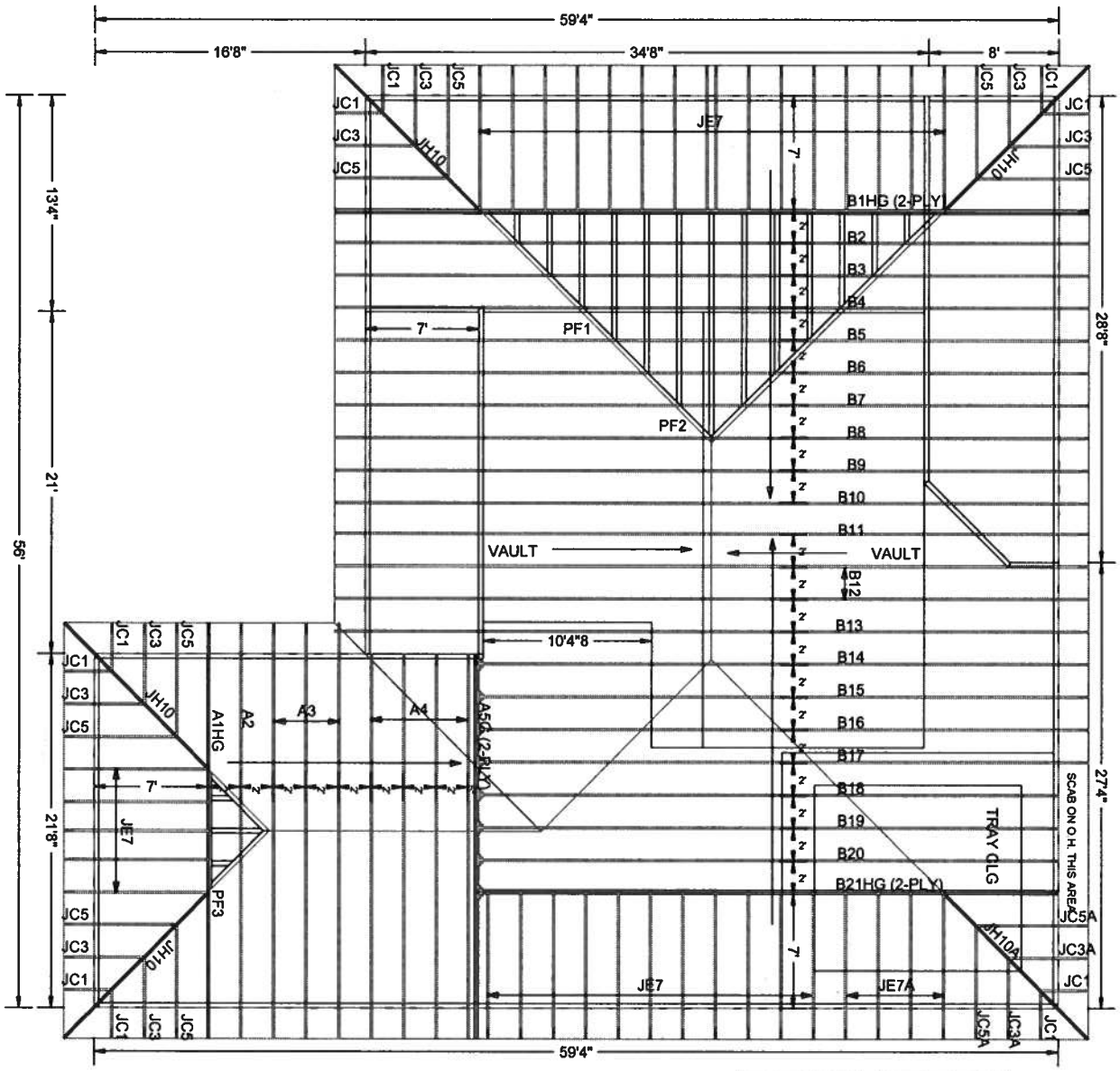

W.B. Howland Truss Co.
P.O. Box 700
Live Oak, FL 32064
(386) 362-1235
(386) 362-7124 (fax)

ROOF PITCH:	6/12
CLG PITCH:	3/12
OVERHANG:	1-10 1/2" PLUMB CUT
LOADING:	40 PSF T.L./SHINGLE
WIND LOAD:	110 MPH/ENCLOSED
EXT WALLS:	2x4 FRAMING
DATE:	4-5-07

Job Name: Russell Residence
Customer: EDGELY CONSTRUCTION
Designer: Chris McCall

JOB NO: 4477

PAGE NO: 1 OF 1

ITW Building Components Group, Inc.

1950 Marley Drive Haines City, FL 33844
Florida Engineering Certificate of Authorization Number: 567
Florida Certificate of Product Approval # FL1999
 Document ID:1T69215-Z0205094751

Truss Fabricator: W.B. Howland
Job Identification: 4477-/Russell Residence /EDGELY CONSTRUCTION -- LAKE CITY, FL
Truss Count: 35
Model Code: Florida Building Code 2004 and 2006 Supplement
Truss Criteria: ANSI/TPI-2002(STD)/FBC
Engineering Software: Alpine Software,Version 7.25.
Structural Engineer of Record: The identity of the structural EOR did not exist as of
Address: the seal date per section 61G15-31.003(5a) of the FAC
Minimum Design Loads: Roof - 40.0 PSF @ 1.25 Duration
Floor - N/A
Wind - 110 MPH ASCE 7-02 -Closed

Seal Date: 04/05/2007

-Truss Design Engineer-
James F. Collins Jr.
Florida License Number: 52212
1950 Marley Drive
Haines City, FL 33844

Notes:

1. Determination as to the suitability of these truss components for the structure is the responsibility of the building designer/engineer of record, as defined in ANSI/TPI 1
2. The drawing date shown on this index sheet must match the date shown on the individual truss component drawing.
3. As shown on attached drawings; the drawing number is preceded by: HCUSR215

Details: CNBRGBLK-BRCLBSUB-TCFILLER-BCFILLER-

#	Ref Description	Drawing#	Date
1	39439--A1HG	07095009	04/05/07
2	39440--A2	07095019	04/05/07
3	39441--A3	07095032	04/05/07
4	39442--A4	07095030	04/05/07
5	39443--A5G (2-PLY)	07095011	04/05/07
6	39444--B1HG (2-PLY)	07095034	04/05/07
7	39445--B2	07095012	04/05/07
8	39446--B3	07095013	04/05/07
9	39447--B4	07095014	04/05/07
10	39448--B5	07095015	04/05/07
11	39449--B6	07095016	04/05/07
12	39450--B7	07095017	04/05/07
13	39451--B8	07095018	04/05/07
14	39452--B9	07095020	04/05/07
15	39453--B10	07095021	04/05/07
16	39454--B11	07095033	04/05/07
17	39455--B12	07095031	04/05/07
18	39456--B13	07095029	04/05/07
19	39457--B14	07095028	04/05/07
20	39458--B15	07095027	04/05/07
21	39459--B16	07095026	04/05/07
22	39460--B17	07095025	04/05/07
23	39461--B18	07095024	04/05/07
24	39462--B19	07095023	04/05/07
25	39463--B20	07095022	04/05/07
26	39464--B21HG (2-PLY)	07095010	04/05/07
27	39465--JC1	07095007	04/05/07
28	39466--JC3	07095003	04/05/07
29	39467--JC3A	07095004	04/05/07
30	39468--JC5	07095005	04/05/07
31	39469--JC5A	07095006	04/05/07
32	39470--JE7	07095035	04/05/07
33	39471--JE7A	07095036	04/05/07
34	39472--JH10	07095008	04/05/07
35	39473--JH10A	07095009	04/05/07

Top chord 2x4 SP #2 N :T2 2x6 SP #2 N:
Bot chord 2x6 SP #2 N
Webs 2x4 SP #2 N

Wind reactions based on MWFRS pressures.

#1 hip supports 7-0-0 jacks W/2 panel TC and no end vert.

Plates sized for a minimum of 3.00 sq.in./piece.

110 mph wind, 15.00 ft mean hgt, ASCE 7-02, CLOSED bldg, Located anywhere in roof, CAT II, EXP B, wind TC DL=5.0 psf, wind BC DL=5.0 psf.

In lieu of structural panels use purlins to brace all flat TC @ 24" OC.

Deflection meets L/360 live and L/240 total load.

The overall height of this truss excluding overhang is 4-0-3.

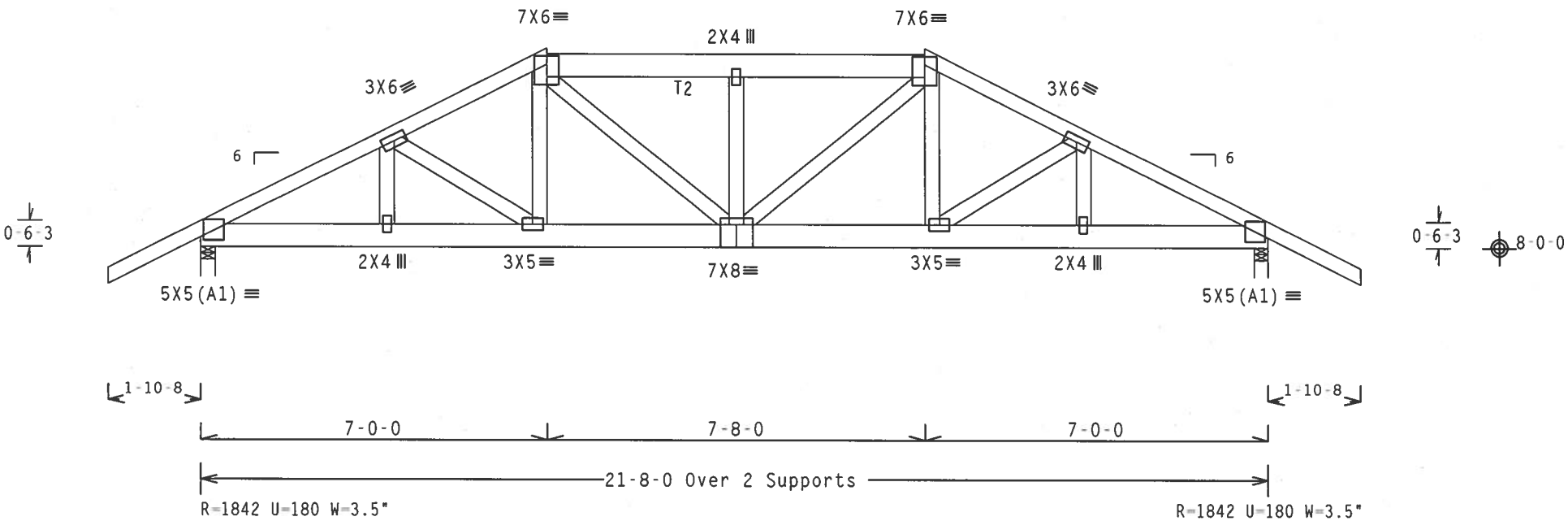

Design Crit: TPI-2002(STD)/FBC

PLT TYP. Wave\R Cq/RT=1.00(1.25)/10(0) 7.25.0502.23 QTY:1 FL/-/5/-/E/R/- Scale =.3125"/Ft.

ALPINE
ITW Building Components Group, Inc.
Haines City, FL 33844
FL Certificate of Authorization # 567

WARNING TRUSSES REQUIRE EXTREME CARE IN FABRICATION, HANDLING, SHIPPING, INSTALLING AND BRACING. REFER TO BCSI (BUILDING COMPONENT SAFETY INFORMATION), PUBLISHED BY TPI (TRUSS PLATE INSTITUTE, 218 NORTH LEE STREET, SUITE 312, ALEXANDRIA, VA, 22314) AND WTCA (WOOD TRUSS COUNCIL OF AMERICA, 6300 ENTERPRISE LANE, MADISON, WI 53719) FOR SAFETY PRACTICES PRIOR TO PERFORMING THESE FUNCTIONS. UNLESS OTHERWISE INDICATED TOP CHORD SHALL HAVE PROPERLY ATTACHED STRUCTURAL PANELS AND BOTTOM CHORD SHALL HAVE A PROPERLY ATTACHED RIGID CEILING.

IMPORTANTFURNISH A COPY OF THIS DESIGN TO THE INSTALLATION CONTRACTOR. ITW BCG, INC. SHALL NOT BE RESPONSIBLE FOR ANY DEVIATION FROM THIS DESIGN; ANY FAILURE TO BUILD THE TRUSS IN CONFORMANCE WITH TPI; OR FABRICATING, HANDLING, SHIPPING, INSTALLING & BRACING OF TRUSSES. DESIGN CONFORMS WITH APPLICABLE PROVISIONS OF NDS (NATIONAL DESIGN SPEC. BY AF&PA) AND TPI. ITW BCG CONNECTOR PLATES ARE MADE OF 20/18/16GA (W.H/SS/K) ASTM A653 GRADE 40/60 (W. K/H.SS) GALV. STEEL. APPLY PLATES TO EACH FACE OF TRUSS AND, UNLESS OTHERWISE LOCATED ON THIS DESIGN, POSITION PER DRAWINGS 160A-Z. ANY INSPECTION OF PLATES FOLLOWED BY (I) SHALL BE PER ANNEX A3 OF TPI1-2002 SEC.3. A SEAL ON THIS DRAWING INDICATES ACCEPTANCE OF PROFESSIONAL ENGINEERING RESPONSIBILITY SOLELY FOR THE TRUSS COMPONENT DESIGN SHOWN. THE SUITABILITY AND USE OF THIS COMPONENT FOR ANY BUILDING IS THE RESPONSIBILITY OF THE BUILDING DESIGNER PER ANSI/TPI 1 SEC. 2.

JAMES F. COLLINS, JR. LICENSE No. 52212 STATE OF FLORIDA PROFESSIONAL ENGINEER

Apr

TC LL	20.0 PSF	REF	R215-- 39439
TC DL	10.0 PSF	DATE	04/05/07
BC DL	10.0 PSF	DRW	HCUSR215 07095009
BC LL	0.0 PSF	HC-ENG	JK/AP
TOT.LD.	40.0 PSF	SEQN-	156778
DUR.FAC.	1.25	FROM	CDM
SPACING	24.0"	JREF-	1T69215_Z02

THIS DWG PREPARED FROM COMPUTER INPUT (LOADS & DIMENSIONS) SUBMITTED BY TRUSS MFR.

Top chord 2x4 SP #2 N
Bot chord 2x4 SP #2 N
Webs 2x4 SP #2 N

Wind reactions based on MWFRS pressures.

Deflection meets L/360 live and L/240 total load.

The overall height of this truss excluding overhang is 5-0-3.

110 mph wind, 15.00 ft mean hgt, ASCE 7-02, CLOSED bldg, not located within 4.50 ft from roof edge, CAT II, EXP B, wind TC DL=5.0 psf, wind BC DL=5.0 psf.

In lieu of structural panels use purlins to brace all flat TC @ 24" OC.

Plates sized for a minimum of 3.00 sq.in./piece.

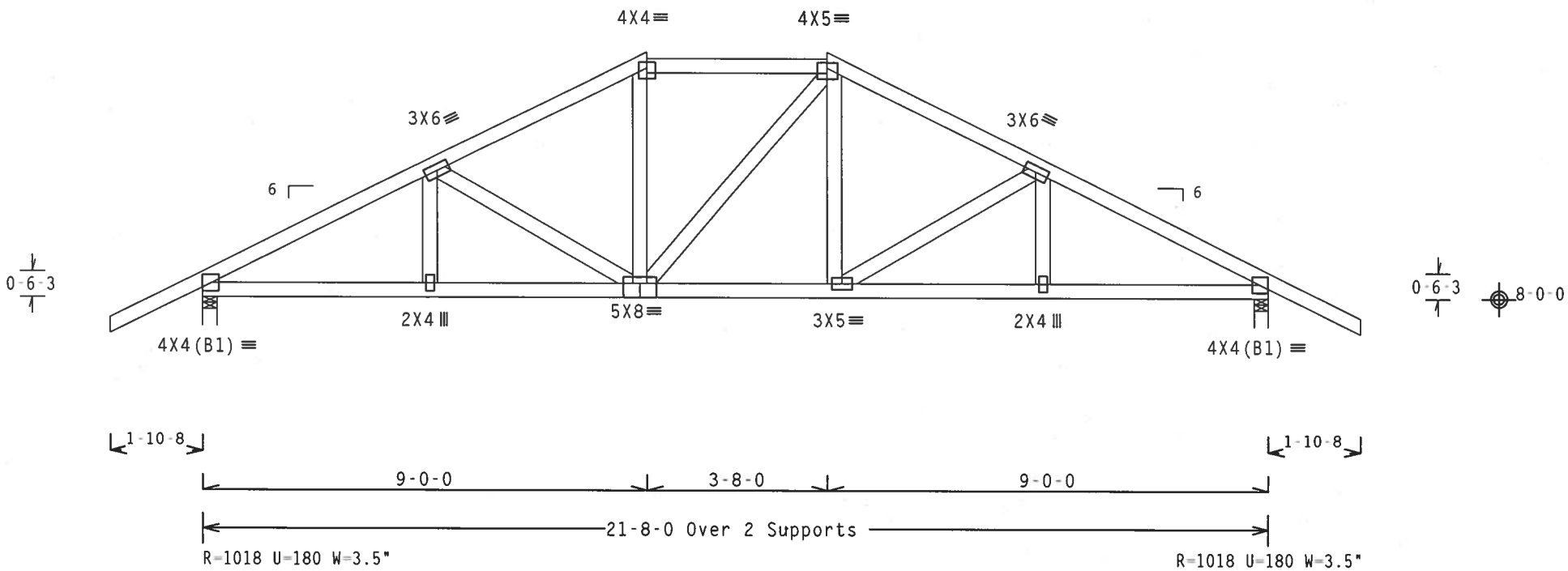

Design Crit: TPI-2002(STD)/FBC

PLT TYP. Wave\R Cg/RT=1.00(1.25)/10(0) 7.25.0502.23 QTY:1 FL/-/5/-/E/R/- Scale =.3125"/Ft.

ALPINE
ITW Building Components Group, Inc.
Haines City, FL 33844
FL Certificate of Authorization # 567

WARNING TRUSSES REQUIRE EXTREME CARE IN FABRICATION, HANDLING, SHIPPING, INSTALLING AND BRACING. REFER TO BCSI (BUILDING COMPONENT SAFETY INFORMATION), PUBLISHED BY TPI (TRUSS PLATE INSTITUTE, 218 NORTH LEE STREET, SUITE 312, ALEXANDRIA, VA, 22314) AND WTCA (WOOD TRUSS COUNCIL OF AMERICA, 6300 ENTERPRISE LANE, MADISON, WI 53719) FOR SAFETY PRACTICES PRIOR TO PERFORMING THESE FUNCTIONS. UNLESS OTHERWISE INDICATED TOP CHORD SHALL HAVE PROPERLY ATTACHED STRUCTURAL PANELS AND BOTTOM CHORD SHALL HAVE A PROPERLY ATTACHED RIGID CEILING.

IMPORTANTFURNISH A COPY OF THIS DESIGN TO THE INSTALLATION CONTRACTOR. ITW BCG, INC. SHALL NOT BE RESPONSIBLE FOR ANY DEVIATION FROM THIS DESIGN; ANY FAILURE TO BUILD THE TRUSS IN COMFORMANCE WITH TPI; OR FABRICATING, HANDLING, SHIPPING, INSTALLING & BRACING OF TRUSSES.
DESIGN CONFORMS WITH APPLICABLE PROVISIONS OF NDS (NATIONAL DESIGN SPEC. BY AF&PA) AND TPI. ITW BCG CONNECTOR PLATES ARE MADE OF 20/18/16GA (W.H/SS/K) ASTM A653 GRADE 40/60 (W. K/H.SS) GALV. STEEL. APPLY PLATES TO EACH FACE OF TRUSS AND. UNLESS OTHERWISE LOCATED ON THIS DESIGN, POSITION PER DRAWINGS 160A-Z. ANY INSPECTION OF PLATES FOLLOWED BY (I) SHALL BE PER ANNEX A3 OF TPI1-2002 SEC.3. A SEAL ON THIS DRAWING INDICATES ACCEPTANCE OF PROFESSIONAL ENGINEERING RESPONSIBILITY SOLELY FOR THE TRUSS COMPONENT DESIGN SHOWN. THE SUITABILITY AND USE OF THIS COMPONENT FOR ANY BUILDING IS THE RESPONSIBILITY OF THE BUILDING DESIGNER PER ANSI/TPI 1 SEC. 2.

JAMES F. COLEMAN JR. LICENSE No. 32212 STATE OF FLORIDA PROFESSIONAL ENGINEER
Apr 0

TC LL	20.0 PSF	REF	R215-- 39440
TC DL	10.0 PSF	DATE	04/05/07
BC DL	10.0 PSF	DRW	HCUSR215 07095019
BC LL	0.0 PSF	HC-ENG	JK/AP *
TOT.LD.	40.0 PSF	SEQN-	156782
DUR.FAC.	1.25	FROM	CDM
SPACING	24.0"	JREF-	1T69215_Z02

Top chord 2x4 SP #2 N
Bot chord 2x4 SP #2 N
Webs 2x4 SP #2 N

Wind reactions based on MWFRS pressures.

Plates sized for a minimum of 3.00 sq.in./piece.

110 mph wind, 15.00 ft mean hgt, ASCE 7-02, CLOSED bldg, not located within 4.50 ft from roof edge, CAT II, EXP B, wind TC DL=5.0 psf, wind BC DL=5.0 psf.

Deflection meets L/360 live and L/240 total load.

The overall height of this truss excluding overhang is 5-11-3.

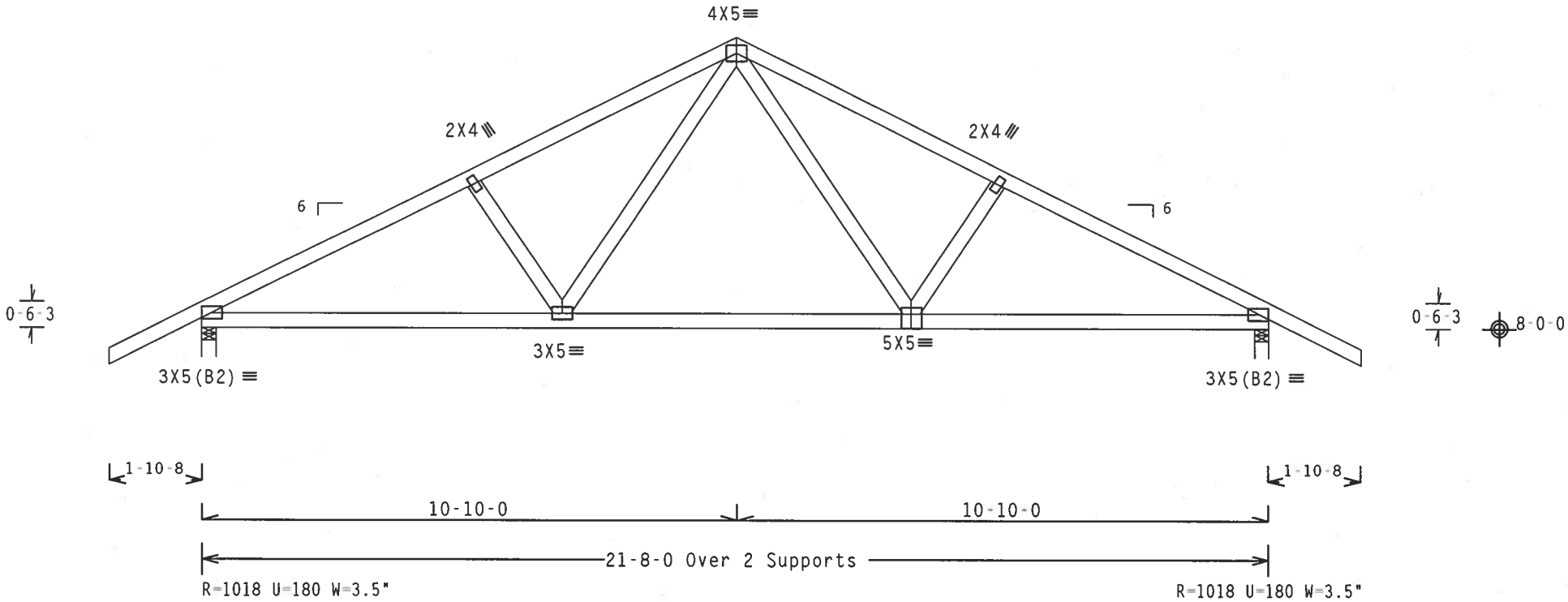

Design Crit: TPI-2002(STD)/FBC

PLT TYP. Wave\R Cq/RT=1.00(1.25)/10(0) 7.25.0502.23 QTY:3 FL/-/5/-/E/R/- Scale =.3125"/Ft.

ALPINE
ITW Building Components Group, Inc.
Haines City, FL 33844
FL Certificate of Authorization # 567

WARNING TRUSSES REQUIRE EXTREME CARE IN FABRICATION, HANDLING, SHIPPING, INSTALLING AND BRACING. REFER TO BCSI (BUILDING COMPONENT SAFETY INFORMATION), PUBLISHED BY TPI (TRUSS PLATE INSTITUTE, 218 NORTH LEE STREET, SUITE 312, ALEXANDRIA, VA, 22314) AND WTCA (WOOD TRUSS COUNCIL OF AMERICA, 6300 ENTERPRISE LANE, MADISON, WI 53719) FOR SAFETY PRACTICES PRIOR TO PERFORMING THESE FUNCTIONS. UNLESS OTHERWISE INDICATED TOP CHORD SHALL HAVE PROPERLY ATTACHED STRUCTURAL PANELS AND BOTTOM CHORD SHALL HAVE A PROPERLY ATTACHED RIGID CEILING.

IMPORTANTFURNISH A COPY OF THIS DESIGN TO THE INSTALLATION CONTRACTOR. ITW BCG, INC. SHALL NOT BE RESPONSIBLE FOR ANY DEVIATION FROM THIS DESIGN; ANY FAILURE TO BUILD THE TRUSS IN COMFORMANCE WITH TPI; OR FABRICATING, HANDLING, SHIPPING, INSTALLING & BRACING OF TRUSSES.
DESIGN CONFORMS WITH APPLICABLE PROVISIONS OF NDS (NATIONAL DESIGN SPEC. BY AF&PA) AND TPI. ITW BCG CONNECTOR PLATES ARE MADE OF 20/18/16GA (W.H/SS/K) ASTM A653 GRADE 40/60 (W. K/H.SS) GALV. STEEL. APPLY PLATES TO EACH FACE OF TRUSS AND, UNLESS OTHERWISE LOCATED ON THIS DESIGN, POSITION PER DRAWINGS 160A-Z. ANY INSPECTION OF PLATES FOLLOWED BY (1) SHALL BE PER ANNEX A3 OF TPI1-2002 SEC.3. A SEAL ON THIS DRAWING INDICATES ACCEPTANCE OF PROFESSIONAL ENGINEERING RESPONSIBILITY SOLELY FOR THE TRUSS COMPONENT DESIGN SHOWN. THE SUITABILITY AND USE OF THIS COMPONENT FOR ANY BUILDING IS THE RESPONSIBILITY OF THE BUILDING DESIGNER PER ANSI/TPI 1 SEC. 2.

JAMES F. COLLINS JR. LICENSE No. 52212 STATE OF FLORIDA PROFESSIONAL ENGINEER
Apr 0

TC LL	20.0 PSF	REF	R215-- 39441
TC DL	10.0 PSF	DATE	04/05/07
BC DL	10.0 PSF	DRW	HCUSR215 07095032
BC LL	0.0 PSF	HC-ENG	JK/AP *
TOT.LD.	40.0 PSF	SEQN-	156786
DUR.FAC.	1.25	FROM	CDM
SPACING	24.0"	JREF-	1T69215_Z02

THIS DWG PREPARED FROM COMPUTER INPUT (LOADS & DIMENSIONS) SUBMITTED BY TRUSS MFR.

Top chord 2x4 SP #2 N
Bot chord 2x4 SP #2 N
Webs 2x4 SP #2 N

Wind reactions based on MWFRS pressures.

Plates sized for a minimum of 3.00 sq.in./piece.

110 mph wind, 15.00 ft mean hgt, ASCE 7-02, CLOSED bldg, not located within 4.50 ft from roof edge, CAT II, EXP B, wind TC DL=5.0 psf, wind BC DL=5.0 psf.

Deflection meets L/360 live and L/240 total load.

The overall height of this truss excluding overhang is 5-11-3.

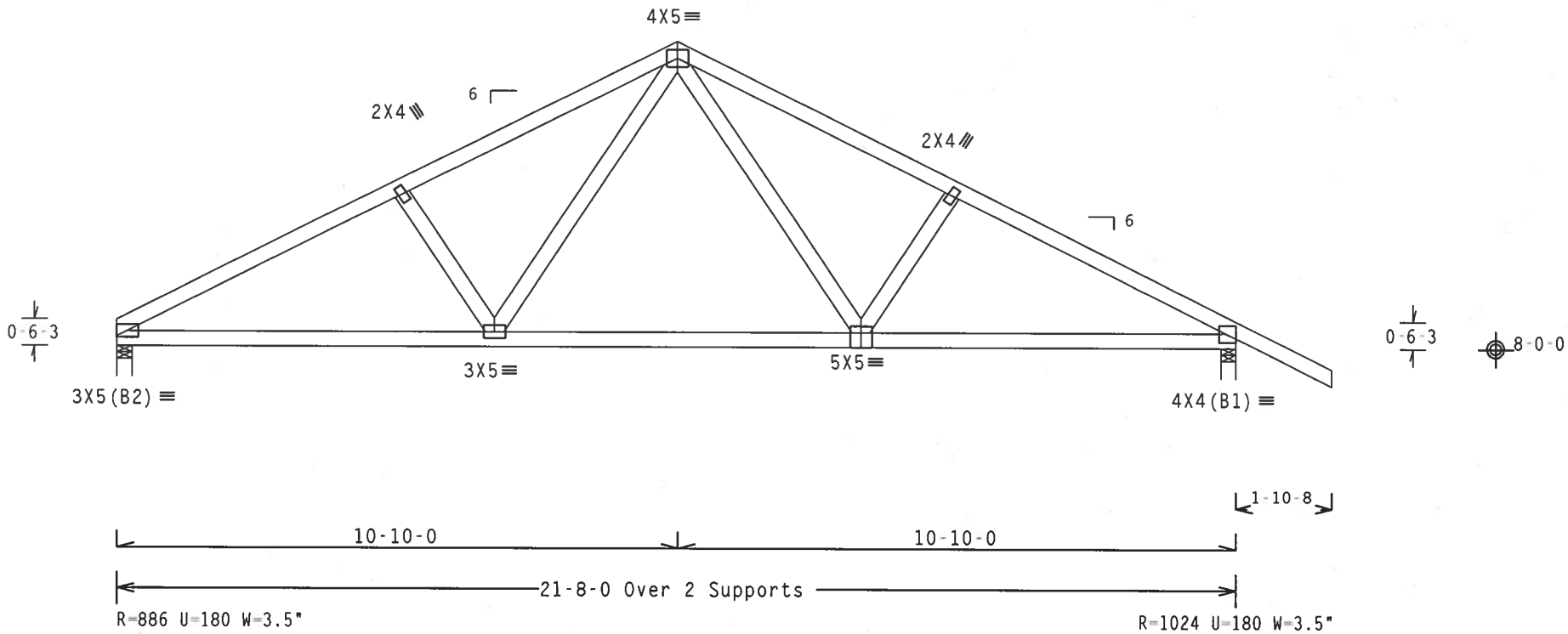

Design Crit: TPI-2002(STD)/FBC

PLT TYP. Wave\R Cq/RT=1.00(1.25)/10(0) 7.25.0502.23 QTY:4 FL/-/5/-/E/R/- Scale =.3125"/Ft.

ALPINE

ITW Building Components Group, Inc.
Haines City, FL 33844
FL Certificate of Authorization # 567

WARNING TRUSSES REQUIRE EXTREME CARE IN FABRICATION, HANDLING, SHIPPING, INSTALLING AND BRACING. REFER TO BCSI (BUILDING COMPONENT SAFETY INFORMATION), PUBLISHED BY TPI (TRUSS PLATE INSTITUTE, 218 NORTH LEE STREET, SUITE 312, ALEXANDRIA, VA. 22314) AND WTCA (WOOD TRUSS COUNCIL OF AMERICA, 6300 ENTERPRISE LANE, MADISON, WI 53719) FOR SAFETY PRACTICES PRIOR TO PERFORMING THESE FUNCTIONS. UNLESS OTHERWISE INDICATED TOP CHORD SHALL HAVE PROPERLY ATTACHED STRUCTURAL PANELS AND BOTTOM CHORD SHALL HAVE A PROPERLY ATTACHED RIGID CEILING.

IMPORTANT FURNISH A COPY OF THIS DESIGN TO THE INSTALLATION CONTRACTOR. ITW BCG, INC. SHALL NOT BE RESPONSIBLE FOR ANY DEVIATION FROM THIS DESIGN; ANY FAILURE TO BUILD THE TRUSS IN CONFORMANCE WITH TPI; OR FABRICATING, HANDLING, SHIPPING, INSTALLING & BRACING OF TRUSSES. DESIGN CONFORMS WITH APPLICABLE PROVISIONS OF NDS (NATIONAL DESIGN SPEC. BY AF&PA) AND TPI. ITW BCG CONNECTOR PLATES ARE MADE OF 20/18/16GA (W,H/SS/K) ASTM A653 GRADE 40/60 (W, K/H,SS) GALV. STEEL. APPLY PLATES TO EACH FACE OF TRUSS AND, UNLESS OTHERWISE LOCATED ON THIS DESIGN, POSITION PER DRAWINGS 160A-Z. ANY INSPECTION OF PLATES FOLLOWED BY (I) SHALL BE PER ANNEX A3 OF TPI1-2002 SEC.3. A SEAL ON THIS DRAWING INDICATES ACCEPTANCE OF PROFESSIONAL ENGINEERING RESPONSIBILITY SOLELY FOR THE TRUSS COMPONENT DESIGN SHOWN. THE SUITABILITY AND USE OF THIS COMPONENT FOR ANY BUILDING IS THE RESPONSIBILITY OF THE BUILDING DESIGNER PER ANSI/TPI 1 SEC. 2.

JAMES F. COLLINS, JR. LICENSE No. 52212 STATE OF FLORIDA PROFESSIONAL ENGINEER

TC LL	20.0 PSF	REF	R215-- 39442
TC DL	10.0 PSF	DATE	04/05/07
BC DL	10.0 PSF	DRW	HCUSR215 07095030
BC LL	0.0 PSF	HC-ENG	JK/AP *
TOT.LD.	40.0 PSF	SEQN-	156790
DUR.FAC.	1.25	FROM	CDM
SPACING	24.0"	JREF-	1T69215_Z02

THIS DWG PREPARED FROM COMPUTER INPUT (LOADS & DIMENSIONS) SUBMITTED BY TRUSS MFR.

Top chord 2x4 SP #2 N
Bot chord 2x8 SP SS
Webs 2x4 SP #2 N

SPECIAL LOADS
-------(LUMBER DUR.FAC.=1.25 / PLATE DUR.FAC.=1.25)
TC - From 62 PLF at 0.00 to 62 PLF at 10.83
TC - From 62 PLF at 10.83 to 62 PLF at 23.54
BC - From 20 PLF at 0.00 to 20 PLF at 21.67
BC - From 4 PLF at 21.67 to 4 PLF at 23.54
BC - 1471 LB Conc. Load at 0.60, 2.60
BC - 1470 LB Conc. Load at 4.60
BC - 1461 LB Conc. Load at 6.60
BC - 1463 LB Conc. Load at 8.60, 10.60, 12.60
BC - 3074 LB Conc. Load at 14.54

110 mph wind, 15.00 ft mean hgt, ASCE 7-02, CLOSED bldg, not located within 4.50 ft from roof edge, CAT II, EXP B, wind TC DL=5.0 psf, wind BC DL=5.0 psf.

Plates sized for a minimum of 3.00 sq.in./piece.

2 COMPLETE TRUSSES REQUIRED

Nailing Schedule: (0.131"x3"_Gun_nails)
Top Chord: 1 Row @12.00" o.c.
Bot Chord: 2 Rows @ 5.00" o.c. (Each Row)
Webs : 1 Row @ 4" o.c.
Use equal spacing between rows and stagger nails in each row to avoid splitting.

Bearing blocks: Nail type: 0.131"x3"_Gun_nails

BRG	X-LOC	#BLOCKS	LENGTH/BLK	#NAILS/BLK	WALL PLATE
1	0.000'	2	12"	13	Match Truss
2	21.375'	1	12"	4	Match Truss

Bearing block to be same size and species as bottom chord.
Refer to drawing CNBRGBLK1103 for additional information.

Wind reactions based on MWFRS pressures.

Deflection meets L/360 live and L/240 total load.

The overall height of this truss excluding overhang is 5-11-3.

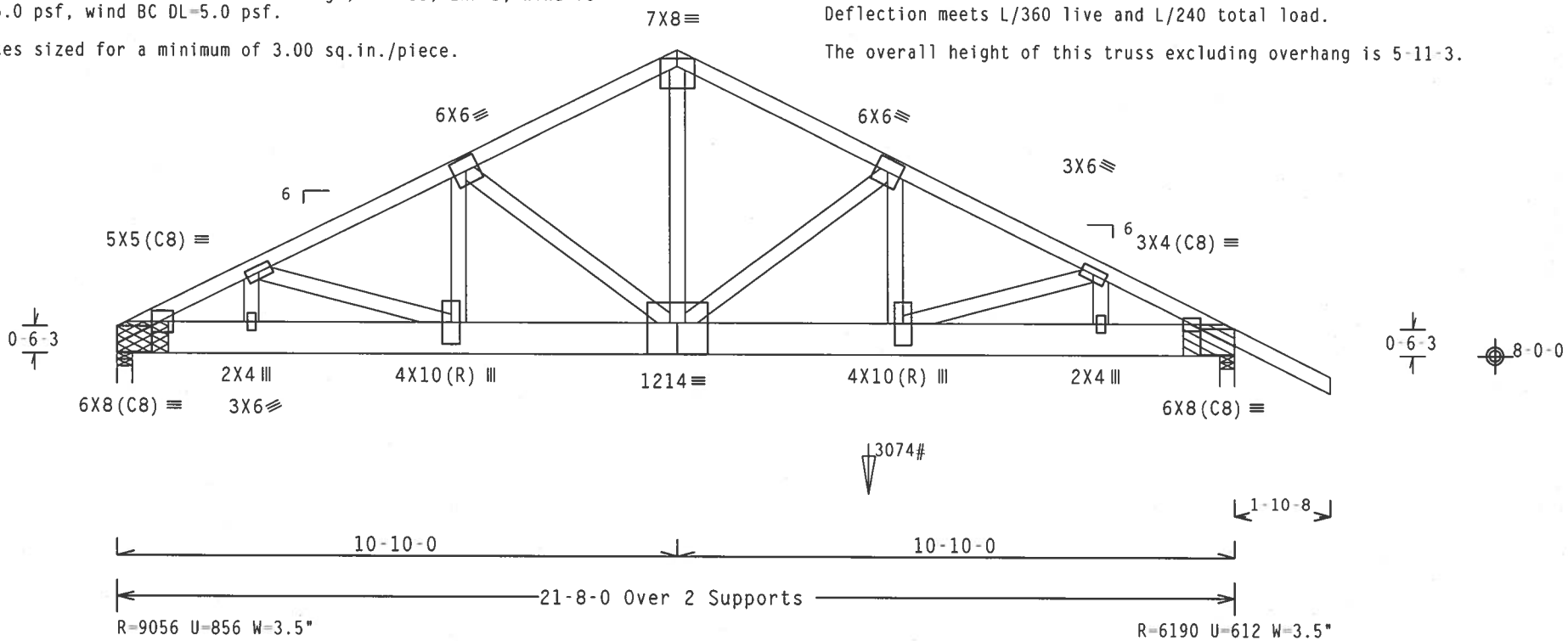

Design Crit: TPI-2002(STD)/FBC

PLT TYP. Wave\R Cq/RT=1.00(1.25)/10(0) 7.25.0502.23 QTY:1 FL/-/5/-/E/R/- Scale =.3125"/Ft.

ALPINE
ITW Building Components Group, Inc.
Haines City, FL 33844
FL Certificate of Authorization # 567

WARNING TRUSSES REQUIRE EXTREME CARE IN FABRICATION, HANDLING, SHIPPING, INSTALLING AND BRACING. REFER TO BCSI (BUILDING COMPONENT SAFETY INFORMATION), PUBLISHED BY TPI (TRUSS PLATE INSTITUTE, 218 NORTH LEE STREET, SUITE 312, ALEXANDRIA, VA, 22314) AND WTCA (WOOD TRUSS COUNCIL OF AMERICA, 6300 ENTERPRISE LANE, MADISON, WI 53719) FOR SAFETY PRACTICES PRIOR TO PERFORMING THESE FUNCTIONS. UNLESS OTHERWISE INDICATED TOP CHORD SHALL HAVE PROPERLY ATTACHED STRUCTURAL PANELS AND BOTTOM CHORD SHALL HAVE A PROPERLY ATTACHED RIGID CEILING.

IMPORTANTFURNISH A COPY OF THIS DESIGN TO THE INSTALLATION CONTRACTOR. ITW BCG, INC. SHALL NOT BE RESPONSIBLE FOR ANY DEVIATION FROM THIS DESIGN; ANY FAILURE TO BUILD THE TRUSS IN COMFORMANCE WITH TPI; OR FABRICATING, HANDLING, SHIPPING, INSTALLING & BRACING OF TRUSSES.
DESIGN CONFORMS WITH APPLICABLE PROVISIONS OF NDS (NATIONAL DESIGN SPEC, BY AF&PA) AND TPI. ITW BCG CONNECTOR PLATES ARE MADE OF 20/18/16GA (W,H/SS/K) ASTM A653 GRADE 40/60 (W, K/H,SS) GALV. STEEL. APPLY PLATES TO EACH FACE OF TRUSS AND, UNLESS OTHERWISE LOCATED ON THIS DESIGN, POSITION PER DRAWINGS 160A-Z. ANY INSPECTION OF PLATES FOLLOWED BY (I) SHALL BE PER ANNEX A3 OF TPI1-2002 SEC.3. A SEAL ON THIS DRAWING INDICATES ACCEPTANCE OF PROFESSIONAL ENGINEERING RESPONSIBILITY SOLELY FOR THE TRUSS COMPONENT DESIGN SHOWN. THE SUITABILITY AND USE OF THIS COMPONENT FOR ANY BUILDING IS THE RESPONSIBILITY OF THE BUILDING DESIGNER PER ANSI/TPI 1 SEC. 2.

JAMES F. COLLINS JR. LICENSE No. 52212 STATE OF FLORIDA PROFESSIONAL ENGINEER
Apr

TC LL	20.0 PSF	REF	R215-- 39443
TC DL	10.0 PSF	DATE	04/05/07
BC DL	10.0 PSF	DRW	HCUSR215 07095011
BC LL	0.0 PSF	HC-ENG	JK/AP
TOT.LD.	40.0 PSF	SEQN-	156952
DUR.FAC.	1.25	FROM	CDM
SPACING	24.0"	JREF-	1T69215_Z02

Top chord 2x4 SP #2 N :T2, T3 2x6 SP #2 N:
Bot chord 2x6 SP #2 N
Webs 2x4 SP #2 N

110 mph wind, 15.00 ft mean hgt, ASCE 7-02, CLOSED bldg, Located anywhere in roof, CAT II, EXP B, wind TC DL=5.0 psf, wind BC DL=5.0 psf.

Wind reactions based on MWFRS pressures.

#1 hip supports 7-0-0 jacks W/2 panel TC and no end vert.

Deflection meets L/360 live and L/240 total load.

The overall height of this truss excluding overhang is 4-0-3.

2 COMPLETE TRUSSES REQUIRED

Nailing Schedule: (0.131"x3"_Gun_nails)
Top Chord: 1 Row @12.00" o.c.
Bot Chord: 1 Row @12.00" o.c.
Webs : 1 Row @ 4" o.c.
Use equal spacing between rows and stagger nails in each row to avoid splitting.

In lieu of structural panels use purlins to brace all flat TC @ 24" OC.

Plates sized for a minimum of 3.00 sq.in./piece.

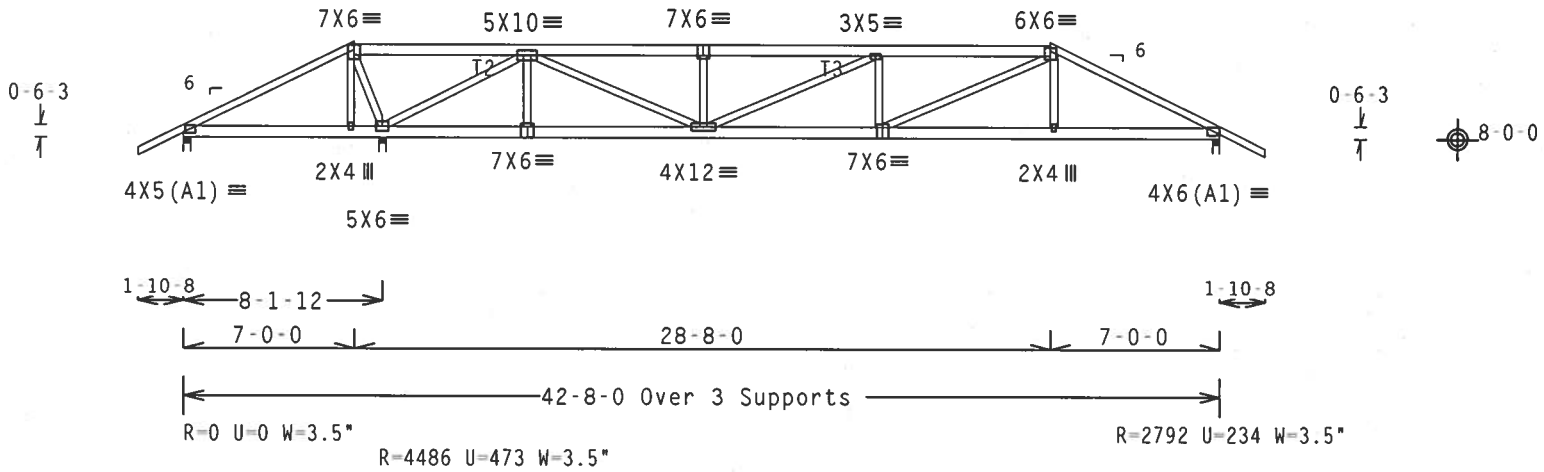

Design Crit: TPI-2002(STD)/FBC

PLT TYP. Wave\R Cq/RT=1.00(1.25)/10(0) 7.25.0502 20 QTY:1 FL/-/5/-/E/R/- Scale =.125"/Ft.

ALPINE
ITW Building Components Group, Inc.
Haines City, FL 33844
FL Certificate of Authorization # 567

WARNING TRUSSES REQUIRE EXTREME CARE IN FABRICATION, HANDLING, SHIPPING, INSTALLING AND BRACING. REFER TO BCSI (BUILDING COMPONENT SAFETY INFORMATION), PUBLISHED BY TPI (TRUSS PLATE INSTITUTE, 218 NORTH LEE STREET, SUITE 312, ALEXANDRIA, VA, 22314) AND WTCA (WOOD TRUSS COUNCIL OF AMERICA, 6300 ENTERPRISE LANE, MADISON, WI 53719) FOR SAFETY PRACTICES PRIOR TO PERFORMING THESE FUNCTIONS. UNLESS OTHERWISE INDICATED TOP CHORD SHALL HAVE PROPERLY ATTACHED STRUCTURAL PANELS AND BOTTOM CHORD SHALL HAVE A PROPERLY ATTACHED RIGID CEILING.

IMPORTANTFURNISH A COPY OF THIS DESIGN TO THE INSTALLATION CONTRACTOR. ITW BCG, INC. SHALL NOT BE RESPONSIBLE FOR ANY DEVIATION FROM THIS DESIGN; ANY FAILURE TO BUILD THE TRUSS IN COMFORMANCE WITH TPI; OR FABRICATING, HANDLING, SHIPPING, INSTALLING & BRACING OF TRUSSES.
DESIGN CONFORMS WITH APPLICABLE PROVISIONS OF NDS (NATIONAL DESIGN SPEC, BY AF&PA) AND TPI. ITW BCG CONNECTOR PLATES ARE MADE OF 20/18/16GA (W,H/SS/K) ASTM A653 GRADE 40/60 (W, K/H,SS) GALV. STEEL. APPLY PLATES TO EACH FACE OF TRUSS AND, UNLESS OTHERWISE LOCATED ON THIS DESIGN, POSITION PER DRAWINGS 160A-Z. ANY INSPECTION OF PLATES FOLLOWED BY (1) SHALL BE PER ANNEX A3 OF TPI1-2002 SEC.3. A SEAL ON THIS DRAWING INDICATES ACCEPTANCE OF PROFESSIONAL ENGINEERING RESPONSIBILITY SOLELY FOR THE TRUSS COMPONENT DESIGN SHOWN. THE SUITABILITY AND USE OF THIS COMPONENT FOR ANY BUILDING IS THE RESPONSIBILITY OF THE BUILDING DESIGNER PER ANSI/TPI 1 SEC. 2.

JAMES F. COLLINS, JR. LICENSE No.52212 STATE OF FLORIDA PROFESSIONAL ENGINEER
Apr 05 07

TC LL	20.0 PSF	REF	R215-- 39444
TC DL	10.0 PSF	DATE	04/05/07
BC DL	10.0 PSF	DRW	HCUSR215 07095034
BC LL	0.0 PSF	HC-ENG	JK/AP
TOT.LD.	40.0 PSF	SEQN-	156798
DUR.FAC.	1.25	FROM	CDM
SPACING	24.0"	JREF-	1T69215_Z02

Top chord 2x4 SP #2 N
Bot chord 2x4 SP #2 N
Webs 2x4 SP #2 N

Wind reactions based on MWFRS pressures.

Deflection meets L/360 live and L/240 total load.

The overall height of this truss excluding overhang is 5-0-3.

110 mph wind, 15.00 ft mean hgt, ASCE 7-02, CLOSED bldg, not located within 6.50 ft from roof edge, CAT II, EXP B, wind TC DL=5.0 psf, wind BC DL=5.0 psf.

In lieu of structural panels use purlins to brace all flat TC @ 24" OC.

Plates sized for a minimum of 3.00 sq.in./piece.

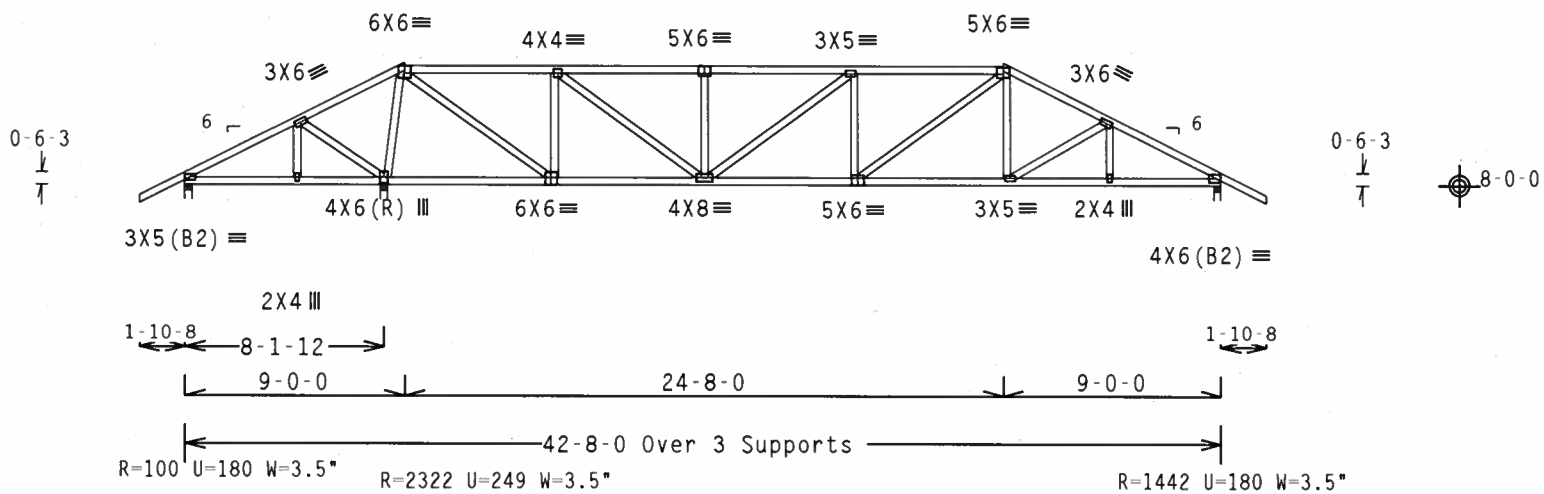

Design Crit: TPI-2002(STD)/FBC
Cq/RT=1.00(1.25)/10(0) 7.25.0502

PLT TYP. Wave\R QTY:1 FL/-/5/-/E/R/- Scale =.125"/Ft.

ALPINE
ITW Building Components Group, Inc.
Haines City, FL 33844
FL Certificate of Authorization # 567

WARNING TRUSSES REQUIRE EXTREME CARE IN FABRICATION, HANDLING, SHIPPING, INSTALLING AND BRACING. REFER TO BCSI (BUILDING COMPONENT SAFETY INFORMATION), PUBLISHED BY TPI (TRUSS PLATE INSTITUTE, 218 NORTH LEE STREET, SUITE 312, ALEXANDRIA, VA, 22314) AND WTCA (WOOD TRUSS COUNCIL OF AMERICA, 6300 ENTERPRISE LANE, MADISON, WI 53719) FOR SAFETY PRACTICES PRIOR TO PERFORMING THESE FUNCTIONS. UNLESS OTHERWISE INDICATED TOP CHORD SHALL HAVE PROPERLY ATTACHED STRUCTURAL PANELS AND BOTTOM CHORD SHALL HAVE A PROPERLY ATTACHED RIGID CEILING.

IMPORTANTFURNISH A COPY OF THIS DESIGN TO THE INSTALLATION CONTRACTOR. ITW BCG, INC. SHALL NOT BE RESPONSIBLE FOR ANY DEVIATION FROM THIS DESIGN; ANY FAILURE TO BUILD THE TRUSS IN CONFORMANCE WITH TPI; OR FABRICATING, HANDLING, SHIPPING, INSTALLING & BRACING OF TRUSSES.
DESIGN CONFORMS WITH APPLICABLE PROVISIONS OF NDS (NATIONAL DESIGN SPEC. BY AF&PA) AND TPI. ITW BCG CONNECTOR PLATES ARE MADE OF 20/18/16GA (W,H/SS/K) ASTM A653 GRADE 40/60 (W, K/H,SS) GALV. STEEL. APPLY PLATES TO EACH FACE OF TRUSS AND, UNLESS OTHERWISE LOCATED ON THIS DESIGN, POSITION PER DRAWINGS 160A Z. ANY INSPECTION OF PLATES FOLLOWED BY (1) SHALL BE PER ANNEX A3 OF TPI1 2002 SEC.3. A SEAL ON THIS DRAWING INDICATES ACCEPTANCE OF PROFESSIONAL ENGINEERING RESPONSIBILITY SOLELY FOR THE TRUSS COMPONENT DESIGN SHOWN. THE SUITABILITY AND USE OF THIS COMPONENT FOR ANY BUILDING IS THE RESPONSIBILITY OF THE BUILDING DESIGNER PER ANSI/TPI 1 SEC. 2.

JAMES F. COLLINS JR. LICENSE No. 52212 STATE OF FLORIDA PROFESSIONAL ENGINEER
Apr 05 07

TC LL	20.0 PSF	REF	R215-- 39445
TC DL	10.0 PSF	DATE	04/05/07
BC DL	10.0 PSF	DRW	HCUSR215 07095012
BC LL	0.0 PSF	HC-ENG	JK/AP
TOT.LD.	40.0 PSF	SEQN-	156804
DUR.FAC.	1.25	FROM	CDM
SPACING	24.0"	JREF-	1T69215_Z02

Top chord 2x4 SP #2 N
Bot chord 2x4 SP #2 N
Webs 2x4 SP #2 N

Wind reactions based on MWFRS pressures.

In lieu of structural panels use purlins to brace all flat TC @ 24" OC.

The overall height of this truss excluding overhang is 6-0-3.

110 mph wind, 15.00 ft mean hgt, ASCE 7-02, CLOSED bldg, not located within 6.50 ft from roof edge, CAT II, EXP B, wind TC DL=5.0 psf, wind BC DL=5.0 psf.

(A) Continuous lateral bracing equally spaced on member.

Deflection meets L/360 live and L/240 total load.

Plates sized for a minimum of 3.00 sq.in./piece.

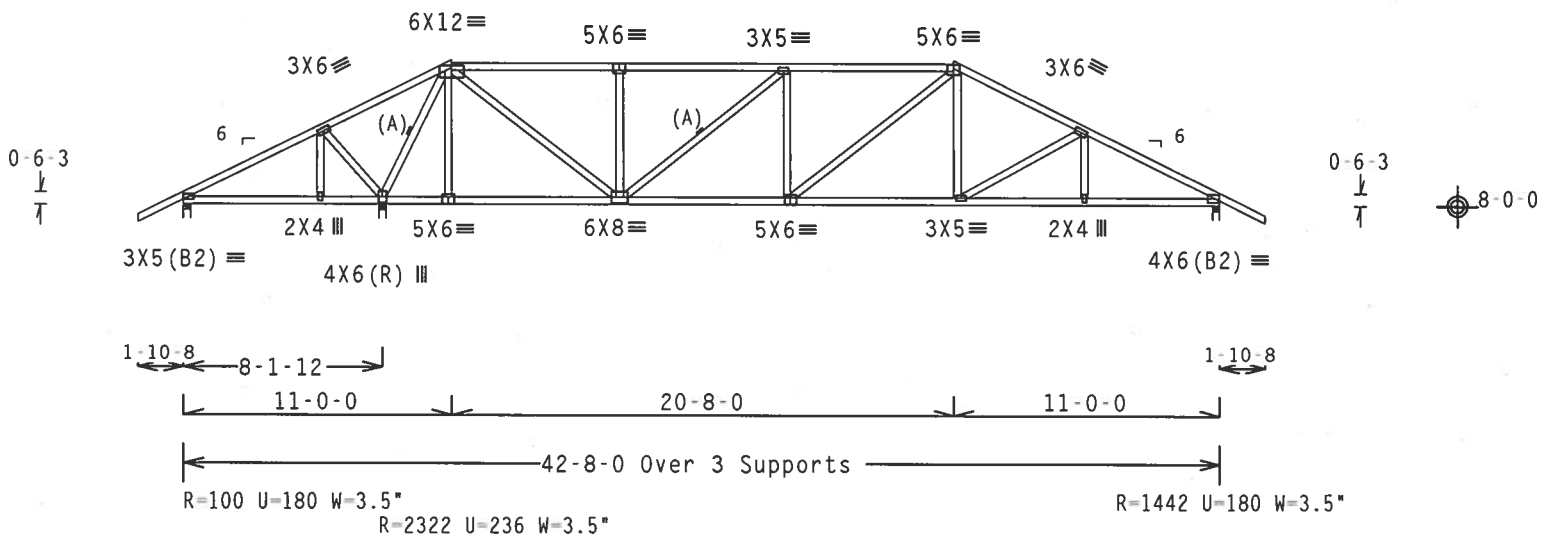

Design Crit: TPI-2002(STD)/FBC

PLT TYP. Wave\R Cq/RT=1.00(1.25)/10(0) 7.25.0502.23 QTY:1 FL/-/5/-/E/R/- Scale =.125"/Ft.

ALPINE

ITW Building Components Group, Inc.
Haines City, FL 33844
FL Certificate of Authorization # 567

WARNING TRUSSES REQUIRE EXTREME CARE IN FABRICATION, HANDLING, SHIPPING, INSTALLING AND BRACING. REFER TO BCSI (BUILDING COMPONENT SAFETY INFORMATION), PUBLISHED BY TPI (TRUSS PLATE INSTITUTE, 218 NORTH LEE STREET, SUITE 312, ALEXANDRIA, VA, 22314) AND WTCA (WOOD TRUSS COUNCIL OF AMERICA, 6300 ENTERPRISE LANE, MADISON, WI 53719) FOR SAFETY PRACTICES PRIOR TO PERFORMING THESE FUNCTIONS. UNLESS OTHERWISE INDICATED TOP CHORD SHALL HAVE PROPERLY ATTACHED STRUCTURAL PANELS AND BOTTOM CHORD SHALL HAVE A PROPERLY ATTACHED RIGID CEILING.

IMPORTANTFURNISH A COPY OF THIS DESIGN TO THE INSTALLATION CONTRACTOR. ITW BCG, INC. SHALL NOT BE RESPONSIBLE FOR ANY DEVIATION FROM THIS DESIGN; ANY FAILURE TO BUILD THE TRUSS IN CONFORMANCE WITH TPI; OR FABRICATING, HANDLING, SHIPPING, INSTALLING & BRACING OF TRUSSES.
DESIGN CONFORMS WITH APPLICABLE PROVISIONS OF NDS (NATIONAL DESIGN SPEC. BY AF&PA) AND TPI. ITW BCG CONNECTOR PLATES ARE MADE OF 20/18/16GA (W.H/SS/K) ASTM A653 GRADE 40/60 (W, K/H.SS) GALV. STEEL. APPLY PLATES TO EACH FACE OF TRUSS AND, UNLESS OTHERWISE LOCATED ON THIS DESIGN, POSITION PER DRAWINGS 160A-Z. ANY INSPECTION OF PLATES FOLLOWED BY (1) SHALL BE PER ANNEX A3 OF TPI1-2002 SEC.3. A SEAL ON THIS DRAWING INDICATES ACCEPTANCE OF PROFESSIONAL ENGINEERING RESPONSIBILITY SOLELY FOR THE TRUSS COMPONENT DESIGN SHOWN. THE SUITABILITY AND USE OF THIS COMPONENT FOR ANY BUILDING IS THE RESPONSIBILITY OF THE BUILDING DESIGNER PER ANSI/TPI 1 SEC. 2.

JAMES F. COLLINS JR. LICENSE No. 52241 STATE OF FLORIDA PROFESSIONAL ENGINEER

Apr

TC LL	20.0 PSF	REF	R215-- 39446
TC DL	10.0 PSF	DATE	04/05/07
BC DL	10.0 PSF	DRW	HCUSR215 07095013
BC LL	0.0 PSF	HC-ENG	JK/AP
TOT.LD.	40.0 PSF	SEQN-	156809
DUR.FAC.	1.25	FROM	CDM
SPACING	24.0"	JREF-	1T69215_Z02

THIS DWG PREPARED FROM COMPUTER INPUT (LOADS & DIMENSIONS) SUBMITTED BY TRUSS MFR.

Top chord 2x4 SP #2 N
Bot chord 2x4 SP #2 N
Webs 2x4 SP #2 N

Wind reactions based on MWFRS pressures.

In lieu of structural panels use purlins to brace all flat TC @ 24" OC.

The overall height of this truss excluding overhang is 7-0-3.

110 mph wind, 15.00 ft mean hgt, ASCE 7-02, CLOSED bldg, not located within 6.50 ft from roof edge, CAT II, EXP B, wind TC DL=5.0 psf, wind BC DL=5.0 psf.

(A) Continuous lateral bracing equally spaced on member.

Deflection meets L/360 live and L/240 total load.

Plates sized for a minimum of 3.00 sq.in./piece.

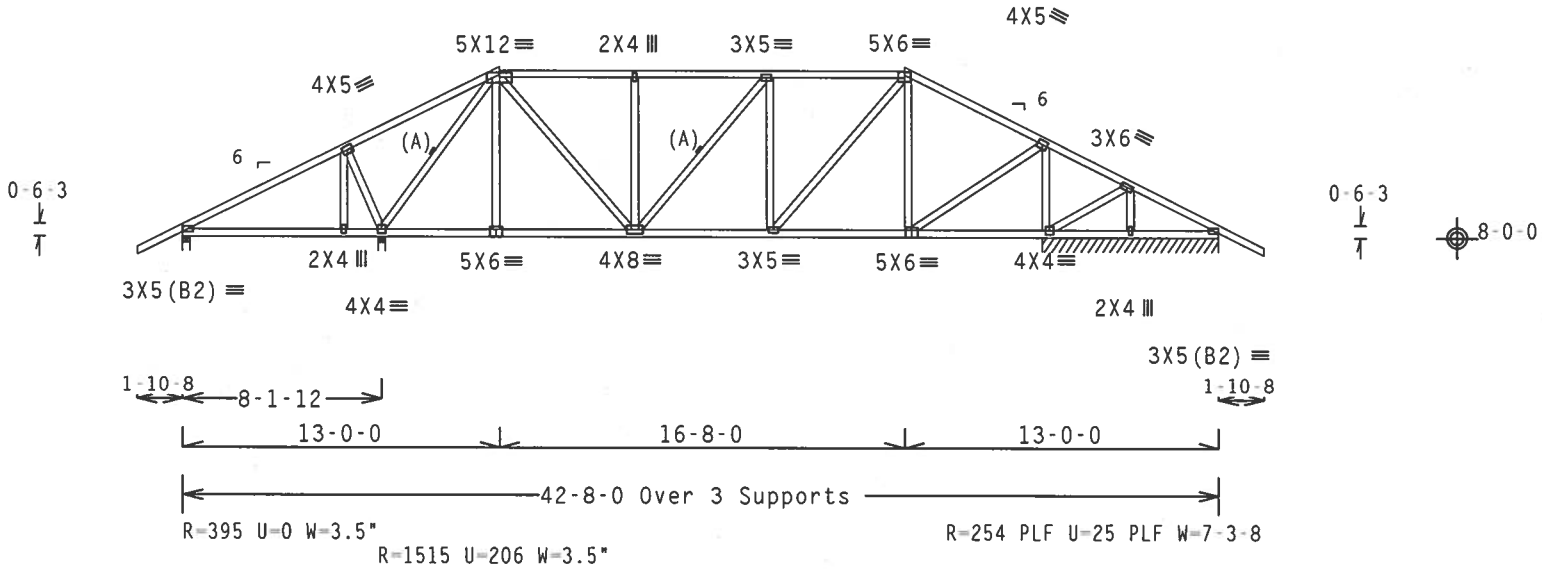

Design Crit: TPI-2002(STD)/FBC

PLT TYP. Wave\R Cq/RT=1.00(1.25)/10(0) 7.25.0502 QTY:1 FL/-/5/-/E/R/- Scale =.125"/Ft.

ALPINE
ITW Building Components Group, Inc.
Haines City, FL 33844
FL Certificate of Authorization # 567

WARNING TRUSSES REQUIRE EXTREME CARE IN FABRICATION, HANDLING, SHIPPING, INSTALLING AND BRACING. REFER TO BCSI (BUILDING COMPONENT SAFETY INFORMATION), PUBLISHED BY TPI (TRUSS PLATE INSTITUTE, 218 NORTH LEE STREET, SUITE 312, ALEXANDRIA, VA, 22314) AND WTCA (WOOD TRUSS COUNCIL OF AMERICA, 6300 ENTERPRISE LANE, MADISON, WI 53719) FOR SAFETY PRACTICES PRIOR TO PERFORMING THESE FUNCTIONS. UNLESS OTHERWISE INDICATED TOP CHORD SHALL HAVE PROPERLY ATTACHED STRUCTURAL PANELS AND BOTTOM CHORD SHALL HAVE A PROPERLY ATTACHED RIGID CEILING.

IMPORTANTFURNISH A COPY OF THIS DESIGN TO THE INSTALLATION CONTRACTOR. ITW BCG, INC. SHALL NOT BE RESPONSIBLE FOR ANY DEVIATION FROM THIS DESIGN; ANY FAILURE TO BUILD THE TRUSS IN COMFORMANCE WITH TPI; OR FABRICATING, HANDLING, SHIPPING, INSTALLING & BRACING OF TRUSSES.
DESIGN CONFORMS WITH APPLICABLE PROVISIONS OF NDS (NATIONAL DESIGN SPEC. BY AF&PA) AND TPI. ITW BCG CONNECTOR PLATES ARE MADE OF 20/18/16GA (W,H/SS/K) ASTM A653 GRADE 40/60 (W, K/H,SS) GALV. STEEL. APPLY PLATES TO EACH FACE OF TRUSS AND, UNLESS OTHERWISE LOCATED ON THIS DESIGN, POSITION PER DRAWINGS 160A-Z. ANY INSPECTION OF PLATES FOLLOWED BY (1) SHALL BE PER ANNEX A3 OF TPI1-2002 SEC.3. A SEAL ON THIS DRAWING INDICATES ACCEPTANCE OF PROFESSIONAL ENGINEERING RESPONSIBILITY SOLELY FOR THE TRUSS COMPONENT DESIGN SHOWN. THE SUITABILITY AND USE OF THIS COMPONENT FOR ANY BUILDING IS THE RESPONSIBILITY OF THE BUILDING DESIGNER PER ANSI/TPI 1 SEC. 2.

JAMES F. COLLINS JR. LICENSED No 52242 STATE OF FLORIDA PROFESSIONAL ENGINEER
Apr 05 07

TC LL	20.0 PSF	REF	R215-- 39447
TC DL	10.0 PSF	DATE	04/05/07
BC DL	10.0 PSF	DRW	HCUSR215 07095014
BC LL	0.0 PSF	HC-ENG	JK/AP
TOT.LD.	40.0 PSF	SEQN-	156815
DUR.FAC.	1.25	FROM	CDM
SPACING	24.0"	JREF-	1T69215_Z02

Top chord 2x4 SP #2 N
Bot chord 2x4 SP #2 N
Webs 2x4 SP #2 N

Wind reactions based on MWFRS pressures.

In lieu of structural panels use purlins to brace all flat TC @ 24" OC.

The overall height of this truss excluding overhang is 8-0-3.

110 mph wind, 15.00 ft mean hgt, ASCE 7-02, CLOSED bldg, not located within 6.50 ft from roof edge, CAT II, EXP B, wind TC DL=5.0 psf, wind BC DL=5.0 psf.

(A) Continuous lateral bracing equally spaced on member.

Deflection meets L/360 live and L/240 total load.

Plates sized for a minimum of 3.00 sq.in./piece.

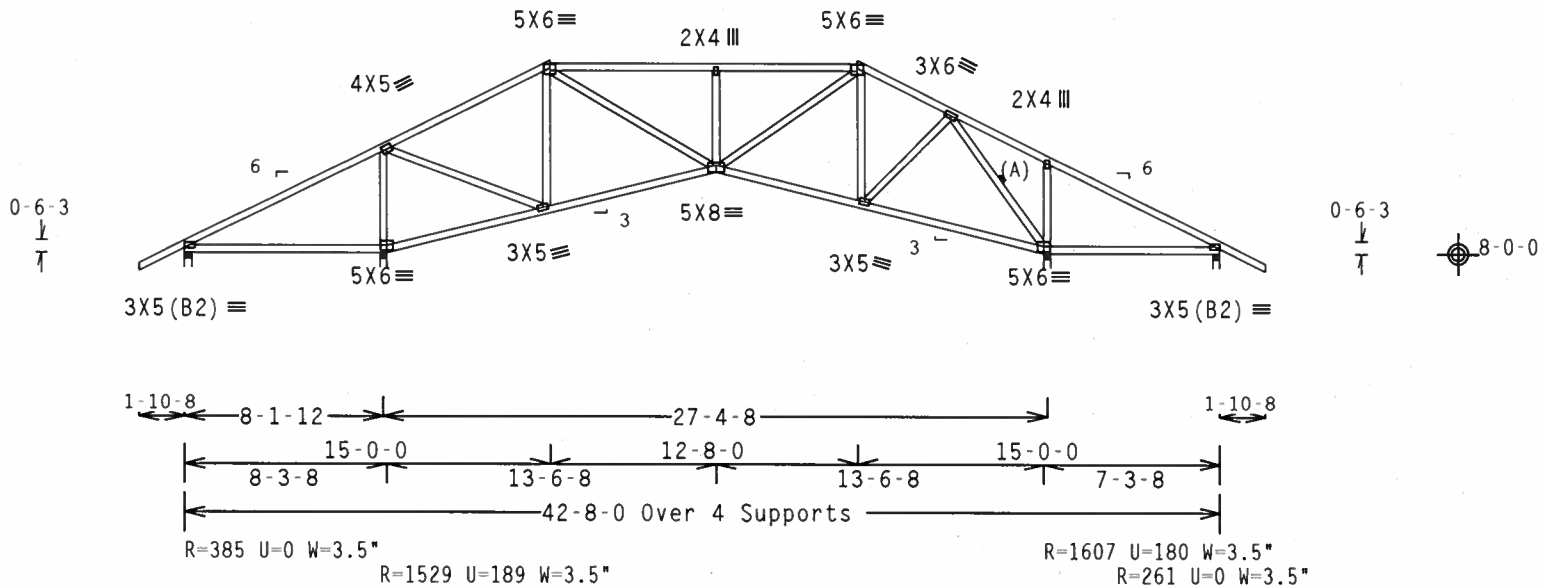

Design Crit: TPI-2002(STD)/FBC
Cq/RT=1.00(1.25)/10(0) 7.25.0502

PLT TYP. Wave\R QTY:1 FL/-/5/-/E/R/- Scale =.125"/Ft.

ALPINE
ITW Building Components Group, Inc.
Haines City, FL 33844
FL Certificate of Authorization # 567

WARNING TRUSSES REQUIRE EXTREME CARE IN FABRICATION, HANDLING, SHIPPING, INSTALLING AND BRACING. REFER TO BCSI (BUILDING COMPONENT SAFETY INFORMATION), PUBLISHED BY TPI (TRUSS PLATE INSTITUTE, 218 NORTH LEE STREET, SUITE 312, ALEXANDRIA, VA, 22314) AND WTCA (WOOD TRUSS COUNCIL OF AMERICA, 6300 ENTERPRISE LANE, MADISON, WI 53719) FOR SAFETY PRACTICES PRIOR TO PERFORMING THESE FUNCTIONS. UNLESS OTHERWISE INDICATED TOP CHORD SHALL HAVE PROPERLY ATTACHED STRUCTURAL PANELS AND BOTTOM CHORD SHALL HAVE A PROPERLY ATTACHED RIGID CEILING.

IMPORTANTFURNISH A COPY OF THIS DESIGN TO THE INSTALLATION CONTRACTOR. ITW BCG, INC. SHALL NOT BE RESPONSIBLE FOR ANY DEVIATION FROM THIS DESIGN; ANY FAILURE TO BUILD THE TRUSS IN COMFORMANCE WITH TPI; OR FABRICATING, HANDLING, SHIPPING, INSTALLING & BRACING OF TRUSSES.
DESIGN CONFORMS WITH APPLICABLE PROVISIONS OF NDS (NATIONAL DESIGN SPEC. BY AF&PA) AND TPI. ITW BCG CONNECTOR PLATES ARE MADE OF 20/18/16GA (W,H/SS/K) ASTM A653 GRADE 40/60 (W, K/H,SS) GALV. STEEL. APPLY PLATES TO EACH FACE OF TRUSS AND, UNLESS OTHERWISE LOCATED ON THIS DESIGN, POSITION PER DRAWINGS 160A-Z. ANY INSPECTION OF PLATES FOLLOWED BY (I) SHALL BE PER ANNEX A3 OF TPI1-2002 SEC.3. A SEAL ON THIS DRAWING INDICATES ACCEPTANCE OF PROFESSIONAL ENGINEERING RESPONSIBILITY SOLELY FOR THE TRUSS COMPONENT DESIGN SHOWN. THE SUITABILITY AND USE OF THIS COMPONENT FOR ANY BUILDING IS THE RESPONSIBILITY OF THE BUILDING DESIGNER PER ANSI/TPI 1 SEC. 2.

JAMES F. COLLINS, JR. LICENSE No. 52212 STATE OF FLORIDA PROFESSIONAL ENGINEER
Apr 05 07

TC LL	20.0 PSF	REF	R215-- 39448
TC DL	10.0 PSF	DATE	04/05/07
BC DL	10.0 PSF	DRW	HCUSR215 07095015
BC LL	0.0 PSF	HC-ENG	JK/AP
TOT.LD.	40.0 PSF	SEQN-	156820
DUR.FAC.	1.25	FROM	CDM
SPACING	24.0"	JREF-	1T69215_Z02

Top chord 2x4 SP #2 N
Bot chord 2x4 SP #2 N
Webs 2x4 SP #2 N

Wind reactions based on MWFRS pressures.

Deflection meets L/360 live and L/240 total load.

The overall height of this truss excluding overhang is 9-0-3.

110 mph wind, 15.00 ft mean hgt, ASCE 7-02, CLOSED bldg, not located within 6.50 ft from roof edge, CAT II, EXP B, wind TC DL=5.0 psf, wind BC DL=5.0 psf.

In lieu of structural panels use purlins to brace all flat TC @ 24" OC.

Plates sized for a minimum of 3.00 sq.in./piece.

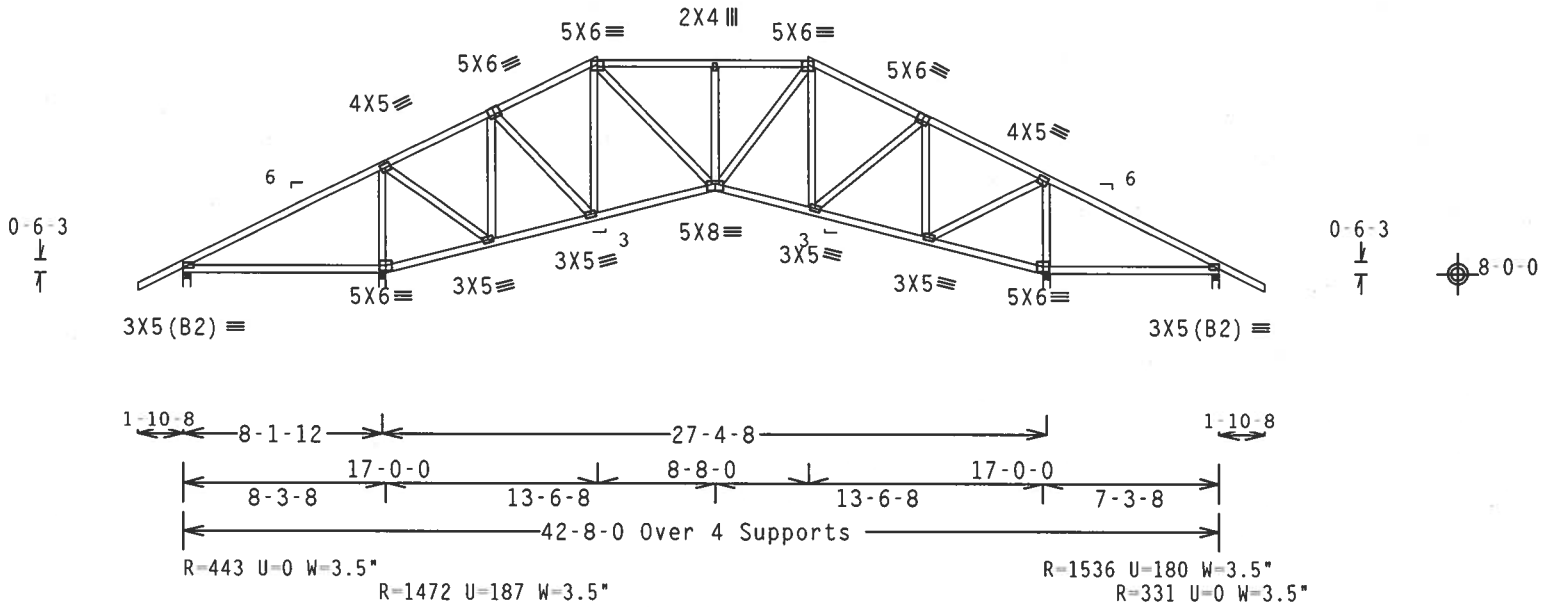

Design Crit: TPI-2002(STD)/FBC

PLT TYP. Wave\R Cq/RT=1.00(1.25)/10(0) 7.25.0502.00 QTY:1 FL/-/5/-/E/R/- Scale =.125"/Ft.

ALPINE

ITW Building Components Group, Inc.
Haines City, FL 33844
FL Certificate of Authorization # 567

WARNING TRUSSES REQUIRE EXTREME CARE IN FABRICATION, HANDLING, SHIPPING, INSTALLING AND BRACING. REFER TO BCSI (BUILDING COMPONENT SAFETY INFORMATION), PUBLISHED BY TPI (TRUSS PLATE INSTITUTE, 218 NORTH LEE STREET, SUITE 312, ALEXANDRIA, VA, 22314) AND WTCA (WOOD TRUSS COUNCIL OF AMERICA, 6300 ENTERPRISE LANE, MADISON, WI 53719) FOR SAFETY PRACTICES PRIOR TO PERFORMING THESE FUNCTIONS. UNLESS OTHERWISE INDICATED TOP CHORD SHALL HAVE PROPERLY ATTACHED STRUCTURAL PANELS AND BOTTOM CHORD SHALL HAVE A PROPERLY ATTACHED RIGID CEILING.

IMPORTANTFURNISH A COPY OF THIS DESIGN TO THE INSTALLATION CONTRACTOR. ITW BCG, INC. SHALL NOT BE RESPONSIBLE FOR ANY DEVIATION FROM THIS DESIGN; ANY FAILURE TO BUILD THE TRUSS IN CONFORMANCE WITH TPI; OR FABRICATING, HANDLING, SHIPPING, INSTALLING & BRACING OF TRUSSES.
DESIGN CONFORMS WITH APPLICABLE PROVISIONS OF NDS (NATIONAL DESIGN SPEC. BY AF&PA) AND TPI. ITW BCG CONNECTOR PLATES ARE MADE OF 20/18/16GA (W,H/SS/K) ASTM A653 GRADE 40/60 (W, K/H,SS) GALV. STEEL. APPLY PLATES TO EACH FACE OF TRUSS AND, UNLESS OTHERWISE LOCATED ON THIS DESIGN. POSITION PER DRAWINGS 160A-Z. ANY INSPECTION OF PLATES FOLLOWED BY (1) SHALL BE PER ANNEX A3 OF TPI1-2002 SEC.3. A SEAL ON THIS DRAWING INDICATES ACCEPTANCE OF PROFESSIONAL ENGINEERING RESPONSIBILITY SOLELY FOR THE TRUSS COMPONENT DESIGN SHOWN. THE SUITABILITY AND USE OF THIS COMPONENT FOR ANY BUILDING IS THE RESPONSIBILITY OF THE BUILDING DESIGNER PER ANSI/TPI 1 SEC. 2.

JAMES F. COLLINS JR. LICENSE No. 52212 STATE OF FLORIDA PROFESSIONAL ENGINEER
Apr 05-07

TC LL	20.0 PSF	REF	R215-- 39449
TC DL	10.0 PSF	DATE	04/05/07
BC DL	10.0 PSF	DRW	HCUSR215 07095016
BC LL	0.0 PSF	HC-ENG	JK/AP
TOT.LD.	40.0 PSF	SEQN-	156826
DUR.FAC.	1.25	FROM	CDM
SPACING	24.0"	JREF-	1T69215_Z02

Top chord 2x4 SP #2 N
Bot chord 2x4 SP #2 N
Webs 2x4 SP #2 N

Wind reactions based on MWFRS pressures.

Deflection meets L/360 live and L/240 total load.

The overall height of this truss excluding overhang is 10-0-3.

110 mph wind, 15.00 ft mean hgt, ASCE 7-02, CLOSED bldg, not located within 6.50 ft from roof edge, CAT II, EXP B, wind TC DL=5.0 psf, wind BC DL=5.0 psf.

In lieu of structural panels use purlins to brace all flat TC @ 24" OC.

Plates sized for a minimum of 3.00 sq.in./piece.

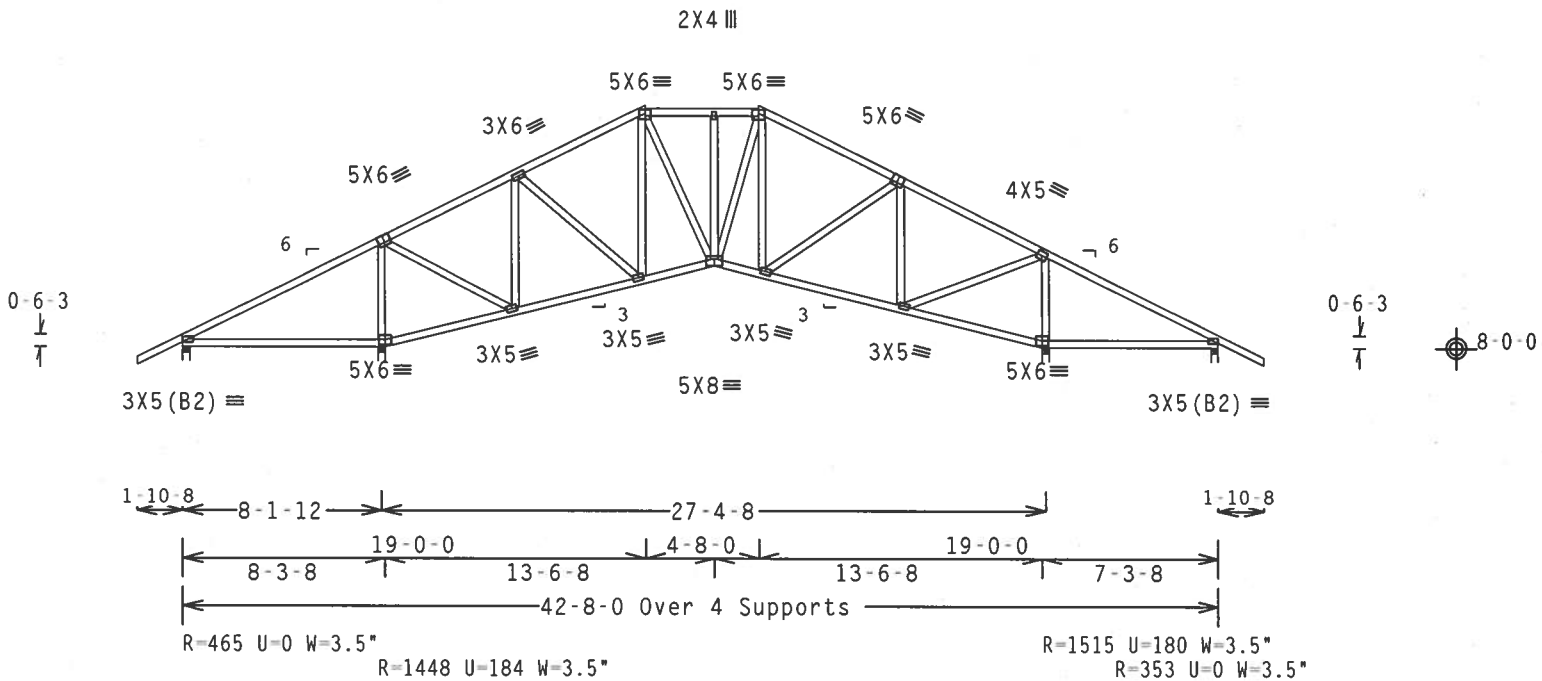

Design Crit: TPI-2002(STD)/FBC

PLT TYP. Wave\R Cq/RT=1.00(1.25)/10(0) 7.25.0502 22 QTY:1 FL/-/5/-/E/R/- Scale =.125"/Ft.

ALPINE
ITW Building Components Group, Inc.
Haines City, FL 33844
FL Certificate of Authorization # 567

WARNING TRUSSES REQUIRE EXTREME CARE IN FABRICATION, HANDLING, SHIPPING, INSTALLING AND BRACING. REFER TO BCSI (BUILDING COMPONENT SAFETY INFORMATION), PUBLISHED BY TPI (TRUSS PLATE INSTITUTE, 218 NORTH LEE STREET, SUITE 312, ALEXANDRIA, VA, 22314) AND WTCA (WOOD TRUSS COUNCIL OF AMERICA, 6300 ENTERPRISE LANE, MADISON, WI 53719) FOR SAFETY PRACTICES PRIOR TO PERFORMING THESE FUNCTIONS. UNLESS OTHERWISE INDICATED TOP CHORD SHALL HAVE PROPERLY ATTACHED STRUCTURAL PANELS AND BOTTOM CHORD SHALL HAVE A PROPERLY ATTACHED RIGID CEILING.

IMPORTANTFURNISH A COPY OF THIS DESIGN TO THE INSTALLATION CONTRACTOR. ITW BCG, INC. SHALL NOT BE RESPONSIBLE FOR ANY DEVIATION FROM THIS DESIGN; ANY FAILURE TO BUILD THE TRUSS IN CONFORMANCE WITH TPI; OR FABRICATING, HANDLING, SHIPPING, INSTALLING & BRACING OF TRUSSES.
DESIGN CONFORMS WITH APPLICABLE PROVISIONS OF NDS (NATIONAL DESIGN SPEC. BY AF&PA) AND TPI. ITW BCG CONNECTOR PLATES ARE MADE OF 20/18/16GA (W,H/SS/K) ASTM A653 GRADE 40/60 (W, K/H,SS) GALV. STEEL. APPLY PLATES TO EACH FACE OF TRUSS AND, UNLESS OTHERWISE LOCATED ON THIS DESIGN, POSITION PER DRAWINGS 160A-Z. ANY INSPECTION OF PLATES FOLLOWED BY (I) SHALL BE PER ANNEX A3 OF TPI1-2002 SEC.3. A SEAL ON THIS DRAWING INDICATES ACCEPTANCE OF PROFESSIONAL ENGINEERING RESPONSIBILITY SOLELY FOR THE TRUSS COMPONENT DESIGN SHOWN. THE SUITABILITY AND USE OF THIS COMPONENT FOR ANY BUILDING IS THE RESPONSIBILITY OF THE BUILDING DESIGNER PER ANSI/TPI 1 SEC. 2.

JAMES F. COLLINS, JR. LICENSED No. 52412 STATE OF FLORIDA PROFESSIONAL ENGINEER
Apr 8, 2007

TC LL	20.0 PSF	REF R215-- 39450
TC DL	10.0 PSF	DATE 04/05/07
BC DL	10.0 PSF	DRW HCUSR215 07095017
BC LL	0.0 PSF	HC-ENG JK/AP
TOT.LD.	40.0 PSF	SEQN- 156832
DUR.FAC.	1.25	FROM CDM
SPACING	24.0"	JREF- 1T69215_Z02

THIS DWG PREPARED FROM COMPUTER INPUT (LOADS & DIMENSIONS) SUBMITTED BY TRUSS MFR.

Top chord 2x4 SP #2 N
Bot chord 2x4 SP #2 N
Webs 2x4 SP #2 N

Wind reactions based on MWFRS pressures.

Deflection meets L/360 live and L/240 total load.

The overall height of this truss excluding overhang is 11-0-3.

110 mph wind, 15.00 ft mean hgt, ASCE 7-02, CLOSED bldg, not located within 6.50 ft from roof edge, CAT II, EXP B, wind TC DL=5.0 psf, wind BC DL=5.0 psf.

In lieu of structural panels use purlins to brace all flat TC @ 24" OC.

Plates sized for a minimum of 3.00 sq.in./piece.

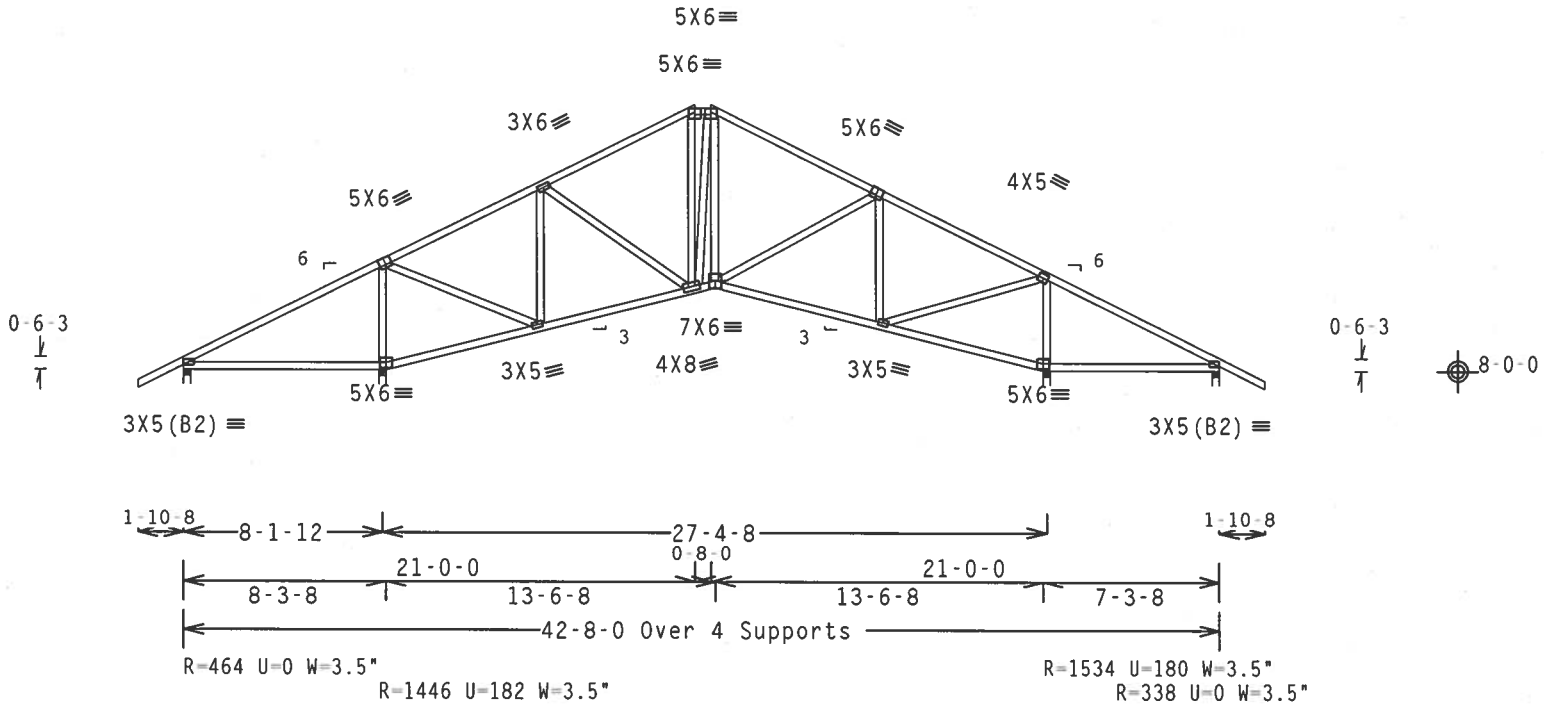

Design Crit: TPI-2002(STD)/FBC

PLT TYP. Wave\R Cq/RT=1.00(1.25)/10(0) 7.25.0502.23 QTY:1 FL/-/5/-/E/R/- Scale =.125"/Ft.

ALPINE

ITW Building Components Group, Inc.
Haines City, FL 33844
FL Certificate of Authorization # 567

WARNING TRUSSES REQUIRE EXTREME CARE IN FABRICATION, HANDLING, SHIPPING, INSTALLING AND BRACING. REFER TO BCSI (BUILDING COMPONENT SAFETY INFORMATION), PUBLISHED BY TPI (TRUSS PLATE INSTITUTE, 218 NORTH LEE STREET, SUITE 312, ALEXANDRIA, VA, 22314) AND WTCA (WOOD TRUSS COUNCIL OF AMERICA, 6300 ENTERPRISE LANE, MADISON, WI 53719) FOR SAFETY PRACTICES PRIOR TO PERFORMING THESE FUNCTIONS. UNLESS OTHERWISE INDICATED TOP CHORD SHALL HAVE PROPERLY ATTACHED STRUCTURAL PANELS AND BOTTOM CHORD SHALL HAVE A PROPERLY ATTACHED RIGID CEILING.

IMPORTANTFURNISH A COPY OF THIS DESIGN TO THE INSTALLATION CONTRACTOR. ITW BCG, INC. SHALL NOT BE RESPONSIBLE FOR ANY DEVIATION FROM THIS DESIGN; ANY FAILURE TO BUILD THE TRUSS IN CONFORMANCE WITH TPI; OR FABRICATING, HANDLING, SHIPPING, INSTALLING & BRACING OF TRUSSES.
DESIGN CONFORMS WITH APPLICABLE PROVISIONS OF NDS (NATIONAL DESIGN SPEC. BY AF&PA) AND TPI. ITW BCG CONNECTOR PLATES ARE MADE OF 20/18/16GA (W,H/SS/K) ASTM A653 GRADE 40/60 (W, K/H,SS) GALV. STEEL. APPLY PLATES TO EACH FACE OF TRUSS AND, UNLESS OTHERWISE LOCATED ON THIS DESIGN. POSITION PER DRAWINGS 160A-Z. ANY INSPECTION OF PLATES FOLLOWED BY (1) SHALL BE PER ANNEX A3 OF TPI1-2002 SEC.3. A SEAL ON THIS DRAWING INDICATES ACCEPTANCE OF PROFESSIONAL ENGINEERING RESPONSIBILITY SOLELY FOR THE TRUSS COMPONENT DESIGN SHOWN. THE SUITABILITY AND USE OF THIS COMPONENT FOR ANY BUILDING IS THE RESPONSIBILITY OF THE BUILDING DESIGNER PER ANSI/TPI 1 SEC. 2.

JAMES F. COLLINS, JR. LICENSE No. 52212 STATE OF FLORIDA PROFESSIONAL ENGINEER

Apr 05-2007

TC LL	20.0 PSF	REF R215-- 39451
TC DL	10.0 PSF	DATE 04/05/07
BC DL	10.0 PSF	DRW HCUSR215 07095018
BC LL	0.0 PSF	HC-ENG JK/AP
TOT.LD.	40.0 PSF	SEQN- 156838
DUR.FAC.	1.25	FROM CDM
SPACING	24.0"	JREF- 1T69215_Z02

THIS DWG PREPARED FROM COMPUTER INPUT (LOADS & DIMENSIONS) SUBMITTED BY TRUSS MFR.

Top chord 2x4 SP #2 N
Bot chord 2x4 SP #2 N
Webs 2x4 SP #2 N

Wind reactions based on MWFRS pressures.

Deflection meets L/360 live and L/240 total load.

The overall height of this truss excluding overhang is 11-2-3.

110 mph wind, 15.00 ft mean hgt, ASCE 7-02, CLOSED bldg, not located within 6.50 ft from roof edge, CAT II, EXP B, wind TC DL=5.0 psf, wind BC DL=5.0 psf.

(A) Continuous lateral bracing equally spaced on member.

Plates sized for a minimum of 3.00 sq.in./piece.

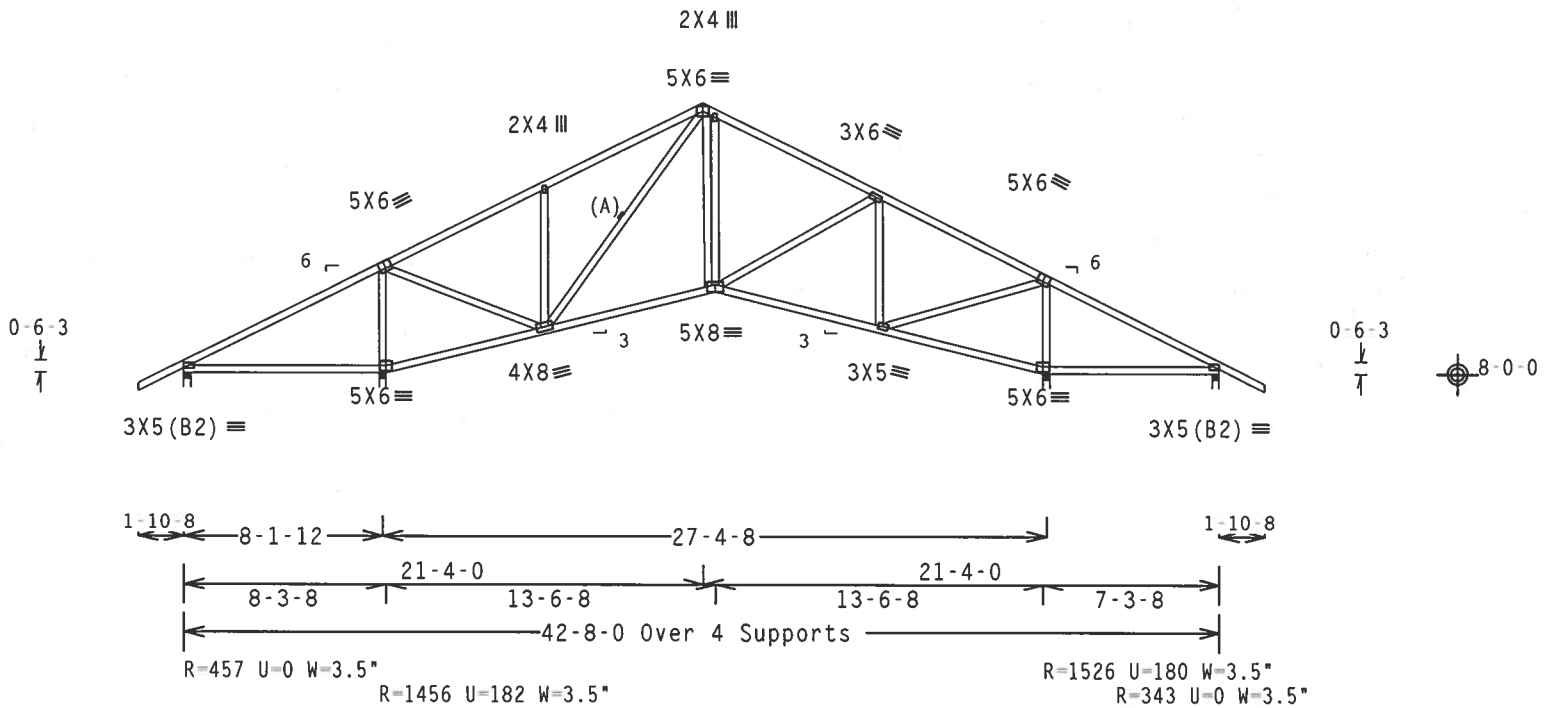

Design Crit: TPI-2002(STD)/FBC

PLT TYP. Wave\R Cq/RT=1.00(1.25)/10(0) 7.25.0503.3 QTY:1 FL/-/5/-/E/R/- Scale =.125"/Ft.

ALPINE
ITW Building Components Group, Inc.
Haines City, FL 33844
FL Certificate of Authorization # 567

WARNING TRUSSES REQUIRE EXTREME CARE IN FABRICATION, HANDLING, SHIPPING, INSTALLING AND BRACING. REFER TO BCSI (BUILDING COMPONENT SAFETY INFORMATION), PUBLISHED BY TPI (TRUSS PLATE INSTITUTE, 218 NORTH LEE STREET, SUITE 312, ALEXANDRIA, VA. 22314) AND WTCA (WOOD TRUSS COUNCIL OF AMERICA, 6300 ENTERPRISE LANE, MADISON, WI 53719) FOR SAFETY PRACTICES PRIOR TO PERFORMING THESE FUNCTIONS. UNLESS OTHERWISE INDICATED TOP CHORD SHALL HAVE PROPERLY ATTACHED STRUCTURAL PANELS AND BOTTOM CHORD SHALL HAVE A PROPERLY ATTACHED RIGID CEILING.

IMPORTANTFURNISH A COPY OF THIS DESIGN TO THE INSTALLATION CONTRACTOR. ITW BCG, INC. SHALL NOT BE RESPONSIBLE FOR ANY DEVIATION FROM THIS DESIGN; ANY FAILURE TO BUILD THE TRUSS IN COMFORMANCE WITH TPI; OR FABRICATING, HANDLING, SHIPPING, INSTALLING & BRACING OF TRUSSES.
DESIGN CONFORMS WITH APPLICABLE PROVISIONS OF NDS (NATIONAL DESIGN SPEC. BY AF&PA) AND TPI. ITW BCG CONNECTOR PLATES ARE MADE OF 20/18/16GA (W,H/SS/K) ASTM A653 GRADE 40/60 (W, K/H,SS) GALV. STEEL. APPLY PLATES TO EACH FACE OF TRUSS AND, UNLESS OTHERWISE LOCATED ON THIS DESIGN, POSITION PER DRAWINGS 160A-Z. ANY INSPECTION OF PLATES FOLLOWED BY (1) SHALL BE PER ANNEX A3 OF TPI1-2002 SEC.3. A SEAL ON THIS DRAWING INDICATES ACCEPTANCE OF PROFESSIONAL ENGINEERING RESPONSIBILITY SOLELY FOR THE TRUSS COMPONENT DESIGN SHOWN. THE SUITABILITY AND USE OF THIS COMPONENT FOR ANY BUILDING IS THE RESPONSIBILITY OF THE BUILDING DESIGNER PER ANSI/TPI 1 SEC. 2.

JAMES F. COLLINS, JR. LICENSE No. 52212 STATE OF FLORIDA PROFESSIONAL ENGINEER
Apr 05 07

TC LL	20.0 PSF	REF	R215-- 39452
TC DL	10.0 PSF	DATE	04/05/07
BC DL	10.0 PSF	DRW	HCUSR215 07095020
BC LL	0.0 PSF	HC-ENG	JK/AP
TOT.LD.	40.0 PSF	SEQN-	156855
DUR.FAC.	1.25	FROM	CDM
SPACING	24.0"	JREF-	1T69215_Z02

Top chord 2x4 SP #2 N
Bot chord 2x4 SP #2 N
Webs 2x4 SP #2 N

Wind reactions based on MWFRS pressures.

Plates sized for a minimum of 3.00 sq.in./piece.

110 mph wind, 15.00 ft mean hgt, ASCE 7-02, CLOSED bldg, not located within 6.50 ft from roof edge, CAT II, EXP B, wind TC DL=5.0 psf, wind BC DL=5.0 psf.

Deflection meets L/360 live and L/240 total load.

The overall height of this truss excluding overhang is 11-2-3.

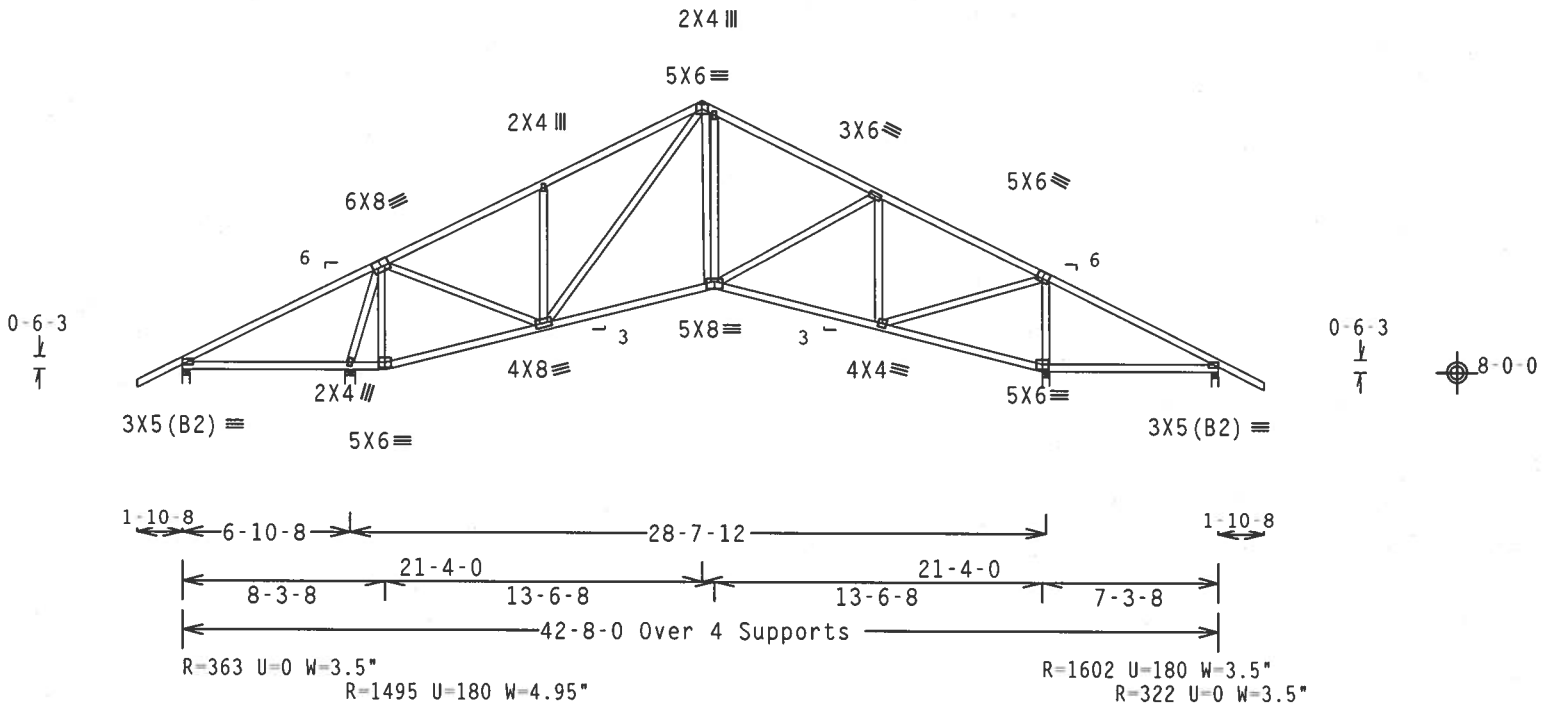

Design Crit: TPI-2002(STD)/FBC

PLT TYP. Wave\R Cq/RT=1.00(1.25)/10(0) 7.25.0502 QTY:1 FL/-/5/-/E/R/- Scale =.125"/Ft.

ALPINE
ITW Building Components Group, Inc.
Haines City, FL 33844
FL Certificate of Authorization # 567

WARNING TRUSSES REQUIRE EXTREME CARE IN FABRICATION, HANDLING, SHIPPING, INSTALLING AND BRACING. REFER TO BCSI (BUILDING COMPONENT SAFETY INFORMATION), PUBLISHED BY TPI (TRUSS PLATE INSTITUTE, 218 NORTH LEE STREET, SUITE 312, ALEXANDRIA, VA, 22314) AND WTCA (WOOD TRUSS COUNCIL OF AMERICA, 6300 ENTERPRISE LANE, MADISON, WI 53719) FOR SAFETY PRACTICES PRIOR TO PERFORMING THESE FUNCTIONS. UNLESS OTHERWISE INDICATED TOP CHORD SHALL HAVE PROPERLY ATTACHED STRUCTURAL PANELS AND BOTTOM CHORD SHALL HAVE A PROPERLY ATTACHED RIGID CEILING.

IMPORTANTFURNISH A COPY OF THIS DESIGN TO THE INSTALLATION CONTRACTOR. ITW BCG, INC. SHALL NOT BE RESPONSIBLE FOR ANY DEVIATION FROM THIS DESIGN; ANY FAILURE TO BUILD THE TRUSS IN CONFORMANCE WITH TPI; OR FABRICATING, HANDLING, SHIPPING, INSTALLING & BRACING OF TRUSSES. DESIGN CONFORMS WITH APPLICABLE PROVISIONS OF NDS (NATIONAL DESIGN SPEC. BY AF&PA) AND TPI. ITW BCG CONNECTOR PLATES ARE MADE OF 20/18/16GA (W,H/SS/K) ASTM A653 GRADE 40/60 (W, K/H,SS) GALV. STEEL. APPLY PLATES TO EACH FACE OF TRUSS AND, UNLESS OTHERWISE LOCATED ON THIS DESIGN, POSITION PER DRAWINGS 160A-Z. ANY INSPECTION OF PLATES FOLLOWED BY (I) SHALL BE PER ANNEX A3 OF TPI1-2002 SEC.3. A SEAL ON THIS DRAWING INDICATES ACCEPTANCE OF PROFESSIONAL ENGINEERING RESPONSIBILITY SOLELY FOR THE TRUSS COMPONENT DESIGN SHOWN. THE SUITABILITY AND USE OF THIS COMPONENT FOR ANY BUILDING IS THE RESPONSIBILITY OF THE BUILDING DESIGNER PER ANSI/TPI 1 SEC. 2.

JAMES F. COLLINS, JR. LICENSE No. 52212 STATE OF FLORIDA PROFESSIONAL ENGINEER
Apr 05 '07

TC LL	20.0 PSF	REF	R215-- 39453
TC DL	10.0 PSF	DATE	04/05/07
BC DL	10.0 PSF	DRW	HCUSR215 07095021
BC LL	0.0 PSF	HC-ENG	JK/AP
TOT.LD.	40.0 PSF	SEQN-	156859
DUR.FAC.	1.25	FROM	CDM
SPACING	24.0"	JREF-	1T69215_Z02

Top chord 2x4 SP #2 N
Bot chord 2x4 SP #2 N
Webs 2x4 SP #2 N

Wind reactions based on MWFRS pressures.

Plates sized for a minimum of 3.00 sq.in./piece.

110 mph wind, 15.00 ft mean hgt, ASCE 7-02, CLOSED bldg, not located within 6.50 ft from roof edge, CAT II, EXP B, wind TC DL=5.0 psf, wind BC DL=5.0 psf.

Deflection meets L/360 live and L/240 total load.

The overall height of this truss excluding overhang is 11-2-3.

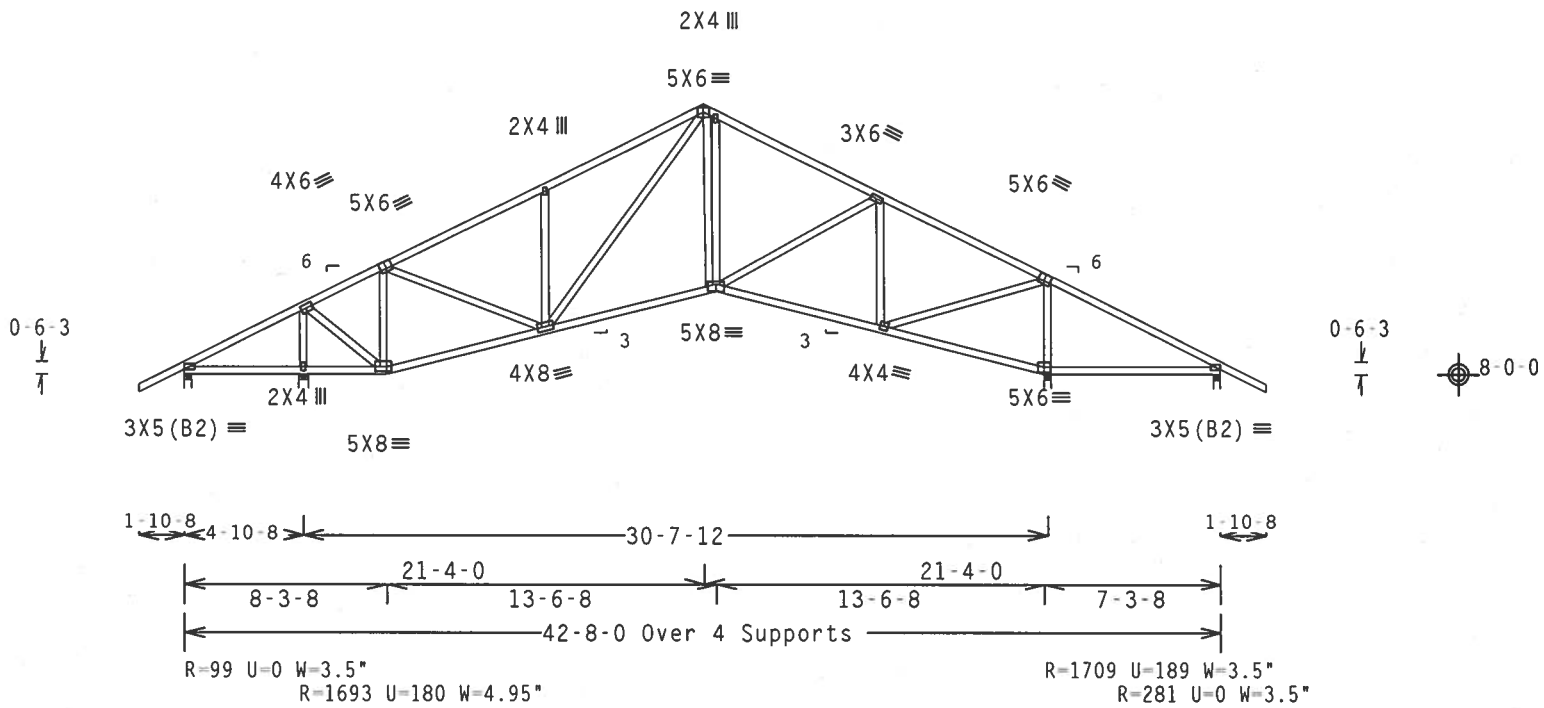

Design Crit: TPI-2002(STD)/FBC

PLT TYP. Wave\R Cq/RT=1.00(1.25)/10(0) 7.25.0502.23 QTY:1 FL/-/5/-/E/R/- Scale =.125"/Ft.

ALPINE
ITW Building Components Group, Inc.
Haines City, FL 33844
FL Certificate of Authorization # 567

WARNING TRUSSES REQUIRE EXTREME CARE IN FABRICATION, HANDLING, SHIPPING, INSTALLING AND BRACING. REFER TO BCSI (BUILDING COMPONENT SAFETY INFORMATION), PUBLISHED BY TPI (TRUSS PLATE INSTITUTE, 218 NORTH LEE STREET, SUITE 312, ALEXANDRIA, VA, 22314) AND WTCA (WOOD TRUSS COUNCIL OF AMERICA, 6300 ENTERPRISE LANE, MADISON, WI 53719) FOR SAFETY PRACTICES PRIOR TO PERFORMING THESE FUNCTIONS. UNLESS OTHERWISE INDICATED TOP CHORD SHALL HAVE PROPERLY ATTACHED STRUCTURAL PANELS AND BOTTOM CHORD SHALL HAVE A PROPERLY ATTACHED RIGID CEILING.

IMPORTANTFURNISH A COPY OF THIS DESIGN TO THE INSTALLATION CONTRACTOR. ITW BCG, INC. SHALL NOT BE RESPONSIBLE FOR ANY DEVIATION FROM THIS DESIGN; ANY FAILURE TO BUILD THE TRUSS IN COMFORMANCE WITH TPI; OR FABRICATING, HANDLING, SHIPPING, INSTALLING & BRACING OF TRUSSES.
DESIGN CONFORMS WITH APPLICABLE PROVISIONS OF NDS (NATIONAL DESIGN SPEC. BY AF&PA) AND TPI. ITW BCG CONNECTOR PLATES ARE MADE OF 20/18/16GA (W.H/SS/K) ASTM A653 GRADE 40/60 (W. K/H.SS) GALV. STEEL. APPLY PLATES TO EACH FACE OF TRUSS AND, UNLESS OTHERWISE LOCATED ON THIS DESIGN, POSITION PER DRAWINGS 160A-Z. ANY INSPECTION OF PLATES FOLLOWED BY (1) SHALL BE PER ANNEX A3 OF TPI1-2002 SEC.3. A SEAL ON THIS DRAWING INDICATES ACCEPTANCE OF PROFESSIONAL ENGINEERING RESPONSIBILITY SOLELY FOR THE TRUSS COMPONENT DESIGN SHOWN. THE SUITABILITY AND USE OF THIS COMPONENT FOR ANY BUILDING IS THE RESPONSIBILITY OF THE BUILDING DESIGNER PER ANSI/TPI 1 SEC. 2.

JAMES F. COLLINS JR. LICENSE No. 52242 STATE OF FLORIDA PROFESSIONAL ENGINEER
Apr

TC LL	20.0 PSF	REF	R215-- 39454
TC DL	10.0 PSF	DATE	04/05/07
BC DL	10.0 PSF	DRW	HCUSR215 07095033
BC LL	0.0 PSF	HC-ENG	JK/AP
TOT.LD.	40.0 PSF	SEQN-	156865
DUR.FAC.	1.25	FROM	CDM
SPACING	24.0"	JREF-	1T69215_Z02

Top chord 2x4 SP #2 N
Bot chord 2x4 SP #2 N
Webs 2x4 SP #2 N

Wind reactions based on MWFRS pressures.

Plates sized for a minimum of 3.00 sq.in./piece.

110 mph wind, 15.00 ft mean hgt, ASCE 7-02, CLOSED bldg, not located within 6.50 ft from roof edge, CAT II, EXP B, wind TC DL=5.0 psf, wind BC DL=5.0 psf.

Deflection meets L/360 live and L/240 total load.

The overall height of this truss excluding overhang is 11-2-3.

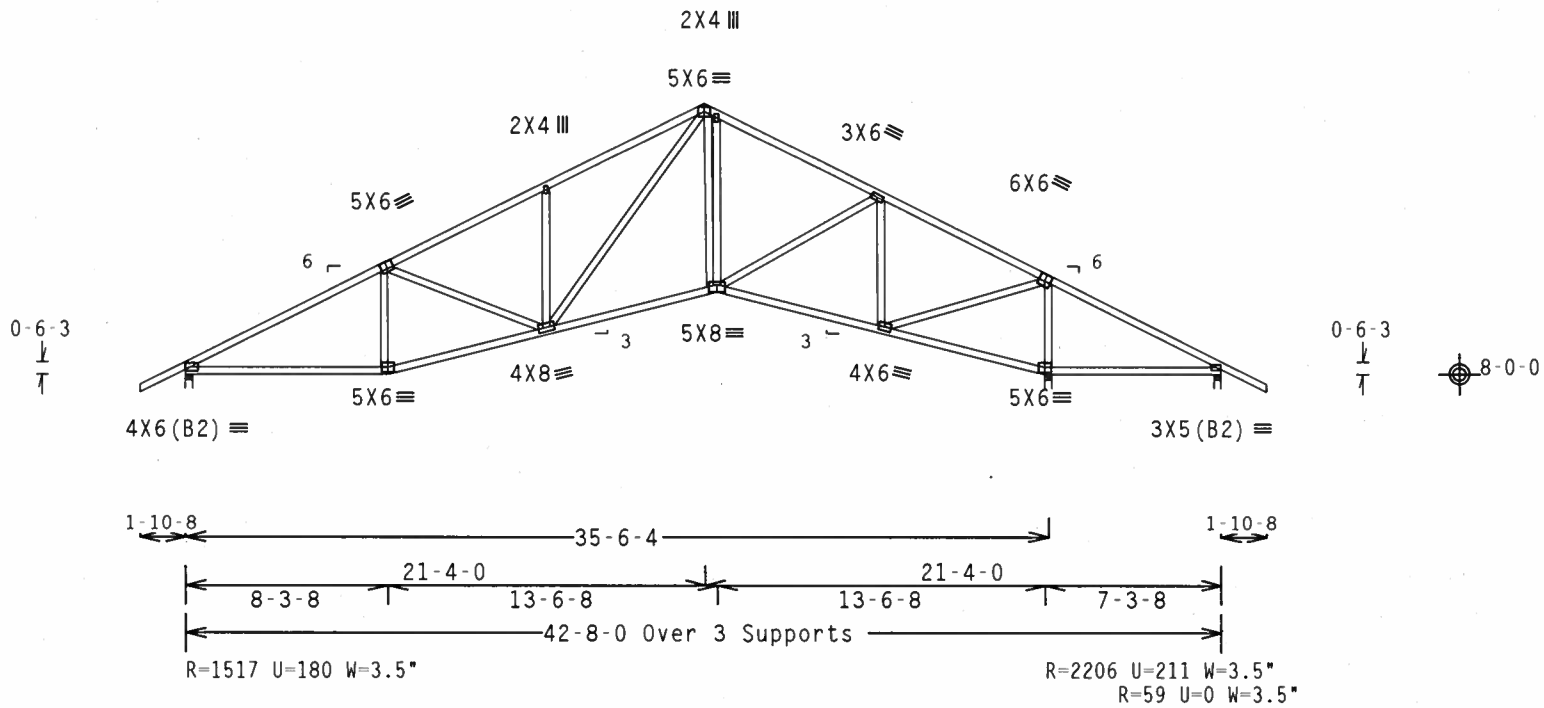

Design Crit: TPI-2002(STD)/FBC

PLT TYP. Wave\R Cq/RT=1.00(1.25)/10(0) 7.25.0502 30 QTY:2 FL/-/5/-/E/R/- Scale =.125"/Ft.

ALPINE

ITW Building Components Group, Inc.
Haines City, FL 33844
FL Certificate of Authorization # 567

WARNING TRUSSES REQUIRE EXTREME CARE IN FABRICATION, HANDLING, SHIPPING, INSTALLING AND BRACING. REFER TO BCSI (BUILDING COMPONENT SAFETY INFORMATION), PUBLISHED BY TPI (TRUSS PLATE INSTITUTE, 218 NORTH LEE STREET, SUITE 312, ALEXANDRIA, VA, 22314) AND WTCA (WOOD TRUSS COUNCIL OF AMERICA, 6300 ENTERPRISE LANE, MADISON, WI 53719) FOR SAFETY PRACTICES PRIOR TO PERFORMING THESE FUNCTIONS. UNLESS OTHERWISE INDICATED TOP CHORD SHALL HAVE PROPERLY ATTACHED STRUCTURAL PANELS AND BOTTOM CHORD SHALL HAVE A PROPERLY ATTACHED RIGID CEILING.

IMPORTANTFURNISH A COPY OF THIS DESIGN TO THE INSTALLATION CONTRACTOR. ITW BCG, INC. SHALL NOT BE RESPONSIBLE FOR ANY DEVIATION FROM THIS DESIGN; ANY FAILURE TO BUILD THE TRUSS IN COMFORMANCE WITH TPI; OR FABRICATING, HANDLING, SHIPPING, INSTALLING & BRACING OF TRUSSES.
DESIGN CONFORMS WITH APPLICABLE PROVISIONS OF NDS (NATIONAL DESIGN SPEC. BY AF&PA) AND TPI. ITW BCG CONNECTOR PLATES ARE MADE OF 20/18/16GA (W,H/SS/K) ASTM A653 GRADE 40/60 (W, K/H,SS) GALV. STEEL. APPLY PLATES TO EACH FACE OF TRUSS AND. UNLESS OTHERWISE LOCATED ON THIS DESIGN, POSITION PER DRAWINGS 160A-Z. ANY INSPECTION OF PLATES FOLLOWED BY (1) SHALL BE PER ANNEX A3 OF TPI1-2002 SEC.3. A SEAL ON THIS DRAWING INDICATES ACCEPTANCE OF PROFESSIONAL ENGINEERING RESPONSIBILITY SOLELY FOR THE TRUSS COMPONENT DESIGN SHOWN. THE SUITABILITY AND USE OF THIS COMPONENT FOR ANY BUILDING IS THE RESPONSIBILITY OF THE BUILDING DESIGNER PER ANSI/TPI 1 SEC. 2.

JAMES F. COLLINS JR. LICENSE No. 52212 STATE OF FLORIDA PROFESSIONAL ENGINEER

Apr 05-07

TC LL	20.0	PSF	REF R215-- 39455
TC DL	10.0	PSF	DATE 04/05/07
BC DL	10.0	PSF	DRW HCUSR215 07095031
BC LL	0.0	PSF	HC-ENG JK/AP
TOT.LD.	40.0	PSF	SEQN- 156873
DUR.FAC.	1.25		FROM CDM
SPACING	24.0"		JREF- 1T69215_Z02

Top chord 2x4 SP #2 N
Bot chord 2x4 SP #2 N
Webs 2x4 SP #2 N
Filler 2x4 SP #2 N

Wind reactions based on MWFRS pressures.

See DWGS TCFILLER1106 and BCFILLER1106 for filler details.

Deflection meets L/360 live and L/240 total load.

The overall height of this truss excluding overhang is 11-2-3.

NOTE: LATERALLY BRACE BOTTOM CHORD ABOVE FILLER AT 2'0" O.C. MAX. INCLUDING A LATERAL BRACE AT CHORD ENDS.

(**) 1 plate(s) require special positioning. Refer to scaled plate plot details for special positioning requirements.

110 mph wind, 15.00 ft mean hgt, ASCE 7-02, CLOSED bldg, not located within 6.50 ft from roof edge, CAT II, EXP B, wind TC DL=5.0 psf, wind BC DL=5.0 psf.

Plates sized for a minimum of 3.00 sq.in./piece.

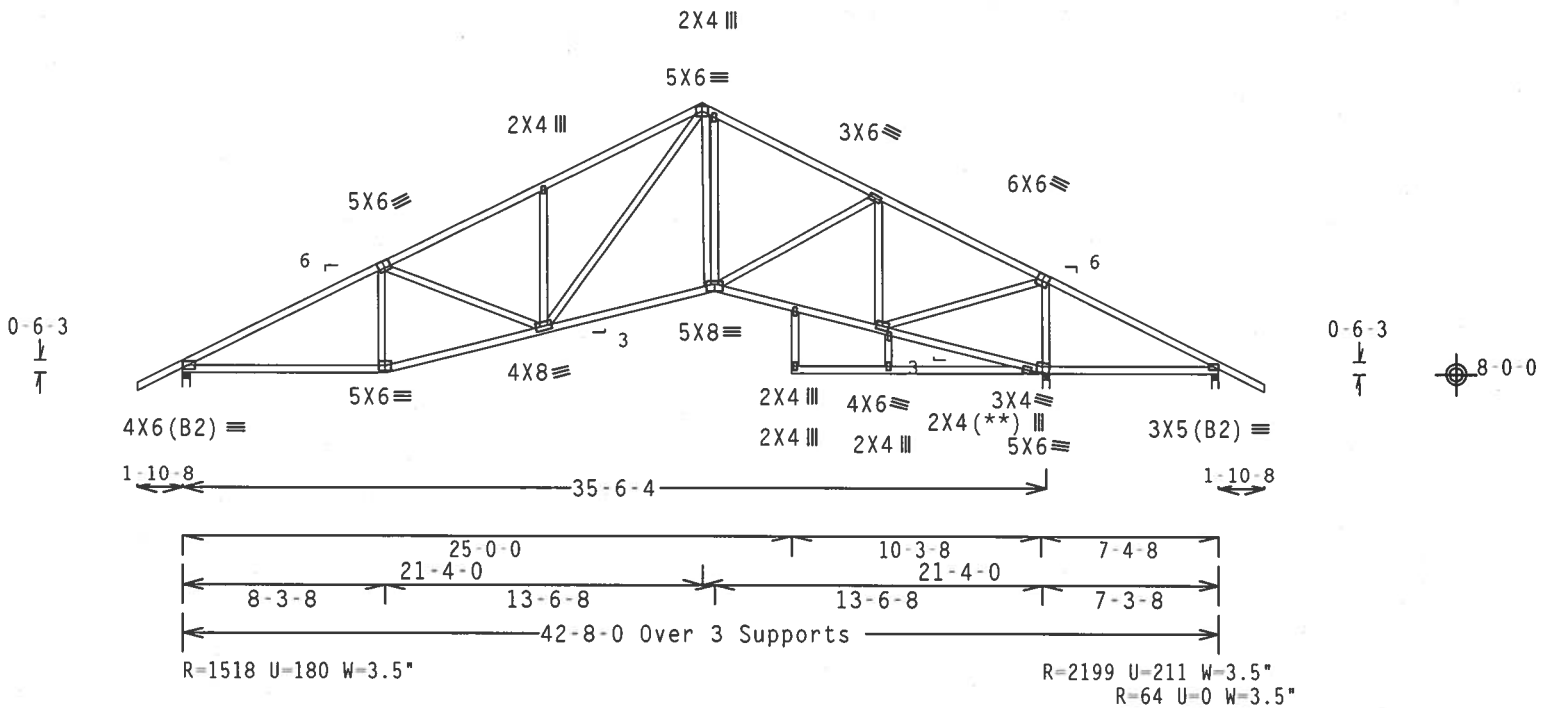

Design Crit: TPI-2002(STD)/FBC

PLT TYP. Wave\R Cq/RT=1.00(1.25)/10(0) 7.25.0502.23 QTY:1 FL/-/5/-/E/R/- Scale =.125"/Ft.

ALPINE
ITW Building Components Group, Inc.
Haines City, FL 33844
FL Certificate of Authorization # 567

WARNING TRUSSES REQUIRE EXTREME CARE IN FABRICATION, HANDLING, SHIPPING, INSTALLING AND BRACING. REFER TO BCSI (BUILDING COMPONENT SAFETY INFORMATION), PUBLISHED BY TPI (TRUSS PLATE INSTITUTE, 218 NORTH LEE STREET, SUITE 312, ALEXANDRIA, VA, 22314) AND WTCA (WOOD TRUSS COUNCIL OF AMERICA, 6300 ENTERPRISE LANE, MADISON, WI 53719) FOR SAFETY PRACTICES PRIOR TO PERFORMING THESE FUNCTIONS. UNLESS OTHERWISE INDICATED TOP CHORD SHALL HAVE PROPERLY ATTACHED STRUCTURAL PANELS AND BOTTOM CHORD SHALL HAVE A PROPERLY ATTACHED RIGID CEILING.

IMPORTANTFURNISH A COPY OF THIS DESIGN TO THE INSTALLATION CONTRACTOR. ITW BCG, INC. SHALL NOT BE RESPONSIBLE FOR ANY DEVIATION FROM THIS DESIGN; ANY FAILURE TO BUILD THE TRUSS IN CONFORMANCE WITH TPI; OR FABRICATING, HANDLING, SHIPPING, INSTALLING & BRACING OF TRUSSES.
DESIGN CONFORMS WITH APPLICABLE PROVISIONS OF NDS (NATIONAL DESIGN SPEC. BY AF&PA) AND TPI. ITW BCG CONNECTOR PLATES ARE MADE OF 20/18/16GA (W.H/SS/K) ASTM A653 GRADE 40/60 (W. K/H.SS) GALV. STEEL. APPLY PLATES TO EACH FACE OF TRUSS AND, UNLESS OTHERWISE LOCATED ON THIS DESIGN. POSITION PER DRAWINGS 160A-Z. ANY INSPECTION OF PLATES FOLLOWED BY (1) SHALL BE PER ANNEX A3 OF TPI1-2002 SEC.3. A SEAL ON THIS DRAWING INDICATES ACCEPTANCE OF PROFESSIONAL ENGINEERING RESPONSIBILITY SOLELY FOR THE TRUSS COMPONENT DESIGN SHOWN. THE SUITABILITY AND USE OF THIS COMPONENT FOR ANY BUILDING IS THE RESPONSIBILITY OF THE BUILDING DESIGNER PER ANSI/TPI 1 SEC. 2.

JAMES F. COLLINS JR. LICENSED No. 52212 STATE OF FLORIDA PROFESSIONAL ENGINEER
Apr

TC LL	20.0 PSF	REF	R215-- 39456
TC DL	10.0 PSF	DATE	04/05/07
BC DL	10.0 PSF	DRW	HCUSR215 07095029
BC LL	0.0 PSF	HC-ENG	JK/AP
TOT.LD.	40.0 PSF	SEQN-	156878
DUR.FAC.	1.25	FROM	CDM
SPACING	24.0"	JREF-	1T69215_Z02

THIS DWG PREPARED FROM COMPUTER INPUT (LOADS & DIMENSIONS) SUBMITTED BY TRUSS MFR.

Top chord 2x4 SP #2 N
Bot chord 2x4 SP #2 N
Webs 2x4 SP #2 N
Filler 2x4 SP #2 N

Wind reactions based on MWFRS pressures.

See DWGS TCFILLER1106 and BCFILLER1106 for filler details.

The overall height of this truss excluding overhang is 11-0-3.

NOTE: LATERALLY BRACE BOTTOM CHORD ABOVE FILLER AT 2'0" O.C. MAX. INCLUDING A LATERAL BRACE AT CHORD ENDS.

(**) 2 plate(s) require special positioning. Refer to scaled plate plot details for special positioning requirements.

110 mph wind, 15.00 ft mean hgt, ASCE 7-02, CLOSED bldg, not located within 4.50 ft from roof edge, CAT II, EXP B, wind TC DL=5.0 psf, wind BC DL=5.0 psf.

Right end vertical not exposed to wind pressure.

Deflection meets L/360 live and L/240 total load.

Plates sized for a minimum of 3.00 sq.in./piece.

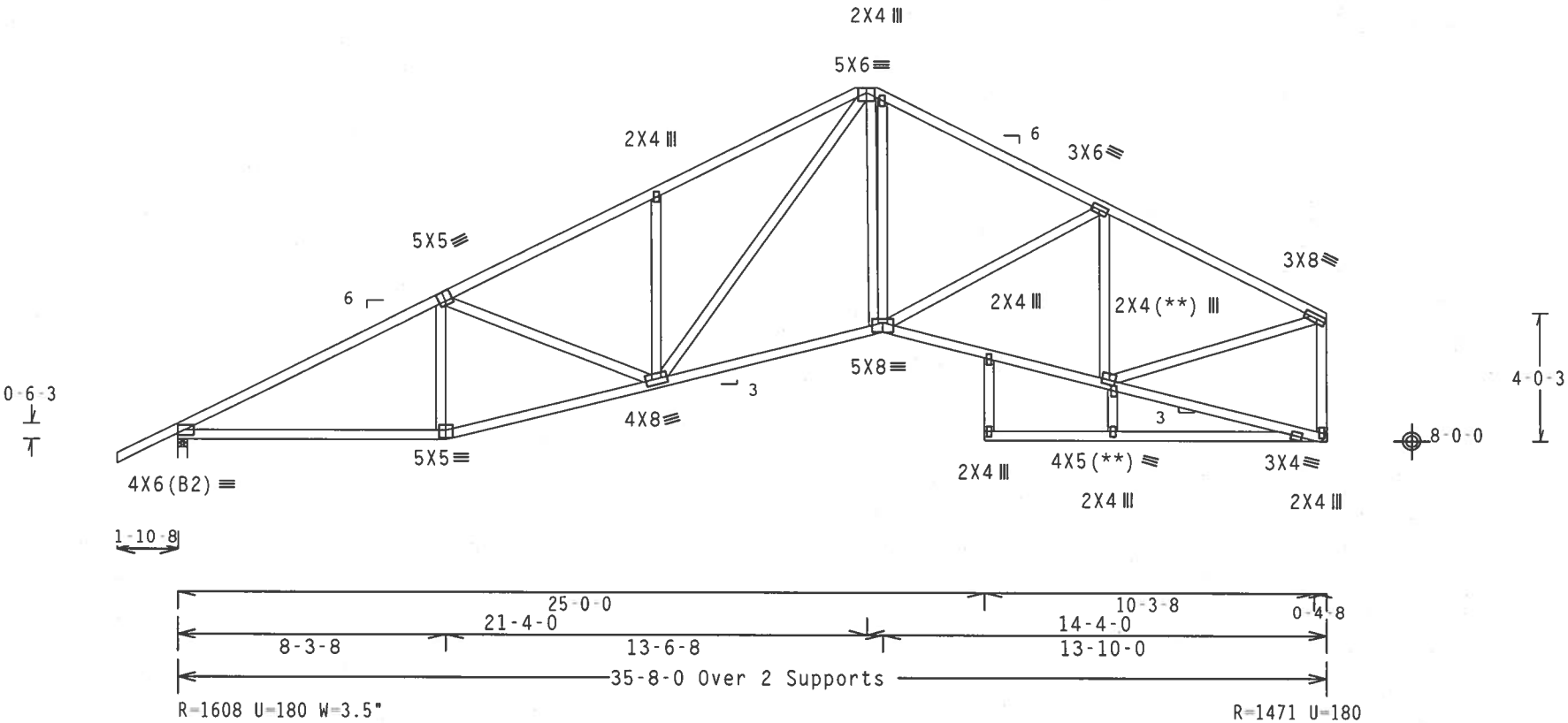

Design Crit: TPI-2002(STD)/FBC

PLT TYP. Wave\R Cq/RT=1.00(1.25)/10(0) 7.25.0502.23 QTY:1 FL/-/5/-/E/R/- Scale =.1875"/Ft.

ALPINE

ITW Building Components Group, Inc.
Haines City, FL 33844
FL Certificate of Authorization # 567

WARNING TRUSSES REQUIRE EXTREME CARE IN FABRICATION, HANDLING, SHIPPING, INSTALLING AND BRACING. REFER TO BCSI (BUILDING COMPONENT SAFETY INFORMATION), PUBLISHED BY TPI (TRUSS PLATE INSTITUTE, 218 NORTH LEE STREET, SUITE 312, ALEXANDRIA, VA, 22314) AND WTCA (WOOD TRUSS COUNCIL OF AMERICA, 6300 ENTERPRISE LANE, MADISON, WI 53719) FOR SAFETY PRACTICES PRIOR TO PERFORMING THESE FUNCTIONS. UNLESS OTHERWISE INDICATED TOP CHORD SHALL HAVE PROPERLY ATTACHED STRUCTURAL PANELS AND BOTTOM CHORD SHALL HAVE A PROPERLY ATTACHED RIGID CEILING.

IMPORTANTFURNISH A COPY OF THIS DESIGN TO THE INSTALLATION CONTRACTOR. ITW BCG, INC. SHALL NOT BE RESPONSIBLE FOR ANY DEVIATION FROM THIS DESIGN; ANY FAILURE TO BUILD THE TRUSS IN CONFORMANCE WITH TPI; OR FABRICATING, HANDLING, SHIPPING, INSTALLING & BRACING OF TRUSSES.
DESIGN CONFORMS WITH APPLICABLE PROVISIONS OF NDS (NATIONAL DESIGN SPEC, BY AF&PA) AND TPI. ITW BCG CONNECTOR PLATES ARE MADE OF 20/18/16GA (W,H/SS/K) ASTM A653 GRADE 40/60 (W, K/H,SS) GALV. STEEL. APPLY PLATES TO EACH FACE OF TRUSS AND, UNLESS OTHERWISE LOCATED ON THIS DESIGN, POSITION PER DRAWINGS 160A-Z. ANY INSPECTION OF PLATES FOLLOWED BY (1) SHALL BE PER ANNEX A3 OF TPI1-2002 SEC.3. A SEAL ON THIS DRAWING INDICATES ACCEPTANCE OF PROFESSIONAL ENGINEERING RESPONSIBILITY SOLELY FOR THE TRUSS COMPONENT DESIGN SHOWN. THE SUITABILITY AND USE OF THIS COMPONENT FOR ANY BUILDING IS THE RESPONSIBILITY OF THE BUILDING DESIGNER PER ANSI/TPI 1 SEC. 2.

JAMES F. COLLINS JR. LICENSE No. 52212 STATE OF FLORIDA PROFESSIONAL ENGINEER

Apr

TC LL	20.0 PSF	REF	R215-- 39457
TC DL	10.0 PSF	DATE	04/05/07
BC DL	10.0 PSF	DRW	HCUSR215 07095028
BC LL	0.0 PSF	HC-ENG	JK/AP
TOT.LD.	40.0 PSF	SEQN-	156885
DUR.FAC.	1.25	FROM	CDM
SPACING	24.0"	JREF-	1T69215_Z02

Top chord 2x4 SP #2 N
Bot chord 2x4 SP #2 N
Webs 2x4 SP #2 N
Filler 2x4 SP #2 N

See DWGS TCFILLER1106 and BCFILLER1106 for filler details.

Deflection meets L/360 live and L/240 total load.

The overall height of this truss excluding overhang is 10-0-3.

NOTE: LATERALLY BRACE BOTTOM CHORD ABOVE FILLER AT 2'0" O.C. MAX. INCLUDING A LATERAL BRACE AT CHORD ENDS.

110 mph wind, 15.00 ft mean hgt, ASCE 7-02, CLOSED bldg, not located within 4.50 ft from roof edge, CAT II, EXP B, wind TC DL=5.0 psf, wind BC DL=5.0 psf.

Wind reactions based on MWFRS pressures.

Right end vertical not exposed to wind pressure.

In lieu of structural panels use purlins to brace all flat TC @ 24" OC.

Plates sized for a minimum of 3.00 sq.in./piece.

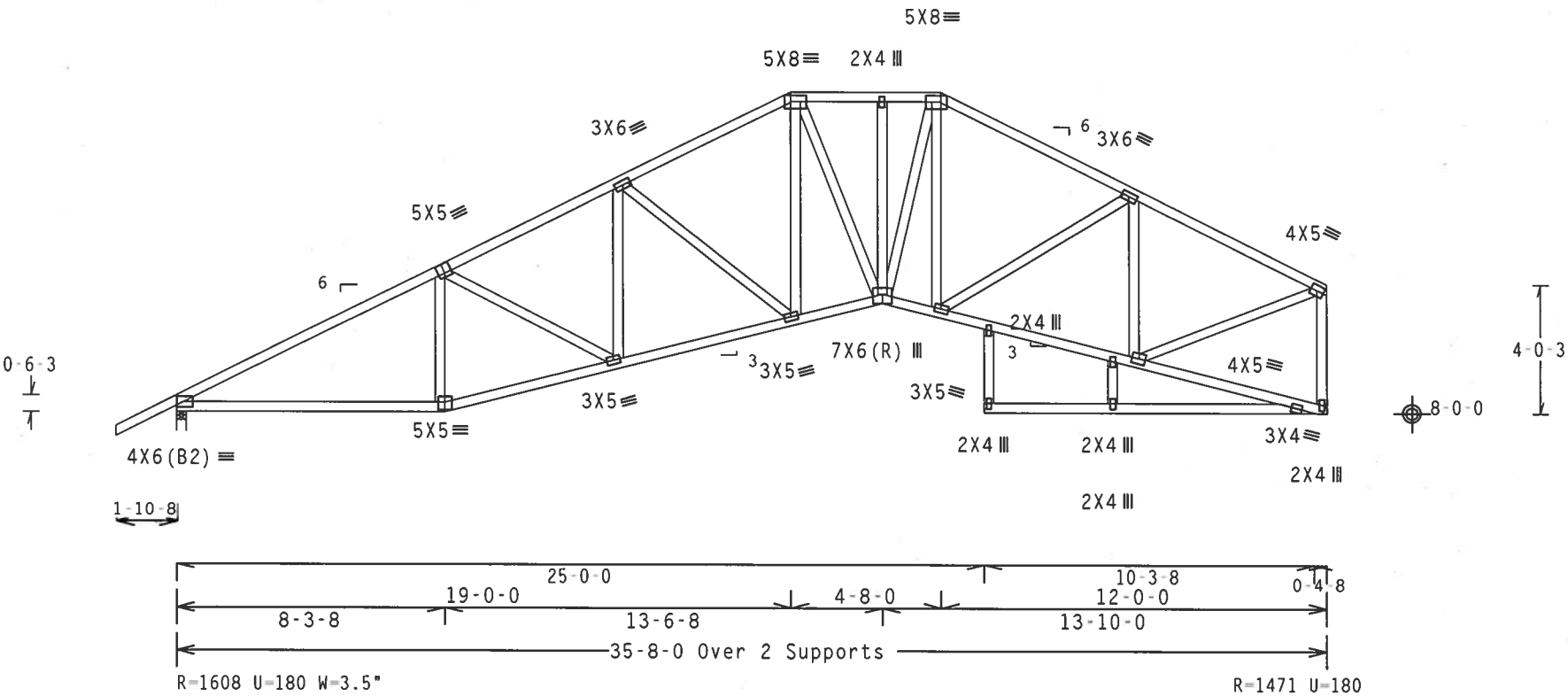

Design Crit: TPI-2002(STD)/FBC

PLT TYP. Wave\R Cq/RT=1.00(1.25)/10(0) 7.25.0502 QTY 1 FL/-/5/-/E/R/- Scale =.1875"/Ft.

ALPINE
ITW Building Components Group, Inc.
Haines City, FL 33844
FL Certificate of Authorization # 567

WARNING TRUSSES REQUIRE EXTREME CARE IN FABRICATION, HANDLING, SHIPPING, INSTALLING AND BRACING. REFER TO BCSI (BUILDING COMPONENT SAFETY INFORMATION), PUBLISHED BY TPI (TRUSS PLATE INSTITUTE, 218 NORTH LEE STREET, SUITE 312, ALEXANDRIA, VA, 22314) AND WTCA (WOOD TRUSS COUNCIL OF AMERICA, 6300 ENTERPRISE LANE, MADISON, WI 53719) FOR SAFETY PRACTICES PRIOR TO PERFORMING THESE FUNCTIONS. UNLESS OTHERWISE INDICATED TOP CHORD SHALL HAVE PROPERLY ATTACHED STRUCTURAL PANELS AND BOTTOM CHORD SHALL HAVE A PROPERLY ATTACHED RIGID CEILING.

IMPORTANTFURNISH A COPY OF THIS DESIGN TO THE INSTALLATION CONTRACTOR. ITW BCG, INC. SHALL NOT BE RESPONSIBLE FOR ANY DEVIATION FROM THIS DESIGN; ANY FAILURE TO BUILD THE TRUSS IN COMFORMANCE WITH TPI; OR FABRICATING, HANDLING, SHIPPING, INSTALLING & BRACING OF TRUSSES.
DESIGN CONFORMS WITH APPLICABLE PROVISIONS OF NDS (NATIONAL DESIGN SPEC. BY AF&PA) AND TPI. ITW BCG CONNECTOR PLATES ARE MADE OF 20/18/16GA (W.H/SS/K) ASTM A653 GRADE 40/60 (W. K/H.SS) GALV. STEEL. APPLY PLATES TO EACH FACE OF TRUSS AND. UNLESS OTHERWISE LOCATED ON THIS DESIGN, POSITION PER DRAWINGS 160A-Z. ANY INSPECTION OF PLATES FOLLOWED BY (1) SHALL BE PER ANNEX A3 OF TPI1-2002 SEC.3. A SEAL ON THIS DRAWING INDICATES ACCEPTANCE OF PROFESSIONAL ENGINEERING RESPONSIBILITY SOLELY FOR THE TRUSS COMPONENT DESIGN SHOWN. THE SUITABILITY AND USE OF THIS COMPONENT FOR ANY BUILDING IS THE RESPONSIBILITY OF THE BUILDING DESIGNER PER ANSI/TPI 1 SEC. 2.

JAMES F. COLLINS, JR. LICENSE No. 52212 STATE OF FLORIDA PROFESSIONAL ENGINEER

Apr 05 07

TC LL	20.0 PSF	REF	R215-- 39458
TC DL	10.0 PSF	DATE	04/05/07
BC DL	10.0 PSF	DRW	HCUSR215 07095027
BC LL	0.0 PSF	HC-ENG	JK/AP
TOT.LD.	40.0 PSF	SEQN-	156893
DUR.FAC.	1.25	FROM	CDM
SPACING	24.0"	JREF-	1T69215_Z02

Top chord 2x4 SP #2 N
Bot chord 2x4 SP #2 N
Webs 2x4 SP #2 N
Filler 2x4 SP #2 N

See DWGS TCFILLER1106 and BCFILLER1106 for filler details.

Deflection meets L/360 live and L/240 total load.

The overall height of this truss excluding overhang is 9-0-3.

NOTE: LATERALLY BRACE BOTTOM CHORD ABOVE FILLER AT 2'0" O.C. MAX. INCLUDING A LATERAL BRACE AT CHORD ENDS.

110 mph wind, 15.00 ft mean hgt, ASCE 7-02, CLOSED bldg, not located within 4.50 ft from roof edge, CAT II, EXP B, wind TC DL=5.0 psf, wind BC DL=5.0 psf.

Wind reactions based on MWFRS pressures.

Right end vertical not exposed to wind pressure.

In lieu of structural panels use purlins to brace all flat TC @ 24" OC.

Plates sized for a minimum of 3.00 sq.in./piece.

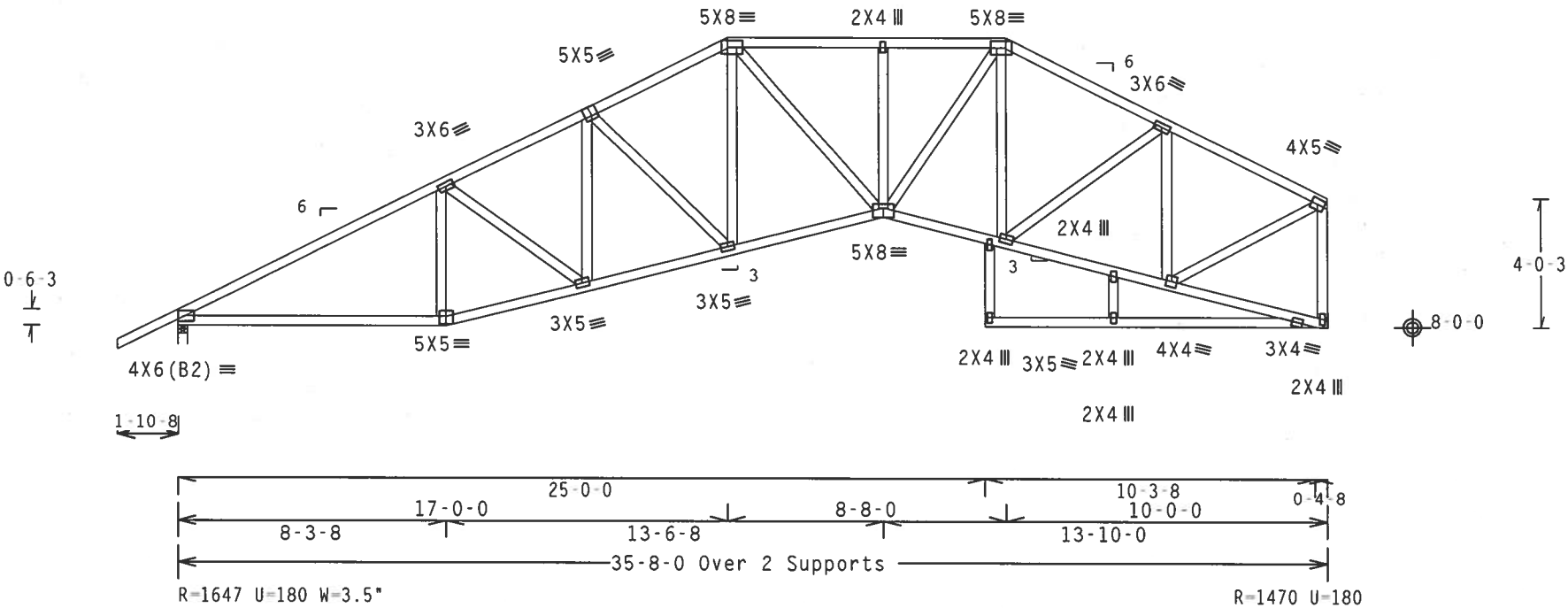

Design Crit: TPI-2002(STD)/FBC

PLT TYP. Wave\R Cq/RT=1.00(1.25)/10(0) 7.25.0502 QTY:1 FL/-/5/-/E/R/- Scale =.1875"/Ft.

ALPINE
ITW Building Components Group, Inc.
Haines City, FL 33844
FL Certificate of Authorization # 567

WARNING TRUSSES REQUIRE EXTREME CARE IN FABRICATION, HANDLING, SHIPPING, INSTALLING AND BRACING. REFER TO BCSI (BUILDING COMPONENT SAFETY INFORMATION), PUBLISHED BY TPI (TRUSS PLATE INSTITUTE, 218 NORTH LEE STREET, SUITE 312, ALEXANDRIA, VA, 22314) AND WTCA (WOOD TRUSS COUNCIL OF AMERICA, 6300 ENTERPRISE LANE, MADISON, WI 53719) FOR SAFETY PRACTICES PRIOR TO PERFORMING THESE FUNCTIONS. UNLESS OTHERWISE INDICATED TOP CHORD SHALL HAVE PROPERLY ATTACHED STRUCTURAL PANELS AND BOTTOM CHORD SHALL HAVE A PROPERLY ATTACHED RIGID CEILING.

IMPORTANTFURNISH A COPY OF THIS DESIGN TO THE INSTALLATION CONTRACTOR. ITW BCG, INC. SHALL NOT BE RESPONSIBLE FOR ANY DEVIATION FROM THIS DESIGN; ANY FAILURE TO BUILD THE TRUSS IN CONFORMANCE WITH TPI; OR FABRICATING, HANDLING, SHIPPING, INSTALLING & BRACING OF TRUSSES.
DESIGN CONFORMS WITH APPLICABLE PROVISIONS OF NDS (NATIONAL DESIGN SPEC. BY AF&PA) AND TPI. ITW BCG CONNECTOR PLATES ARE MADE OF 20/18/16GA (W,H/SS/K) ASTM A653 GRADE 40/60 (W, K/H,SS) GALV. STEEL. APPLY PLATES TO EACH FACE OF TRUSS AND, UNLESS OTHERWISE LOCATED ON THIS DESIGN, POSITION PER DRAWINGS 160A-Z. ANY INSPECTION OF PLATES FOLLOWED BY (1) SHALL BE PER ANNEX A3 OF TPI1-2002 SEC.3. A SEAL ON THIS DRAWING INDICATES ACCEPTANCE OF PROFESSIONAL ENGINEERING RESPONSIBILITY SOLELY FOR THE TRUSS COMPONENT DESIGN SHOWN. THE SUITABILITY AND USE OF THIS COMPONENT FOR ANY BUILDING IS THE RESPONSIBILITY OF THE BUILDING DESIGNER PER ANSI/TPI 1 SEC. 2.

JAMES F. COLLINS JR. LICENSE No. 52212 STATE OF FLORIDA PROFESSIONAL ENGINEER
Apr 05 07

TC LL	20.0 PSF	REF	R215-- 39459
TC DL	10.0 PSF	DATE	04/05/07
BC DL	10.0 PSF	DRW	HCUSR215 07095026
BC LL	0.0 PSF	HC-ENG	JK/AP
TOT.LD.	40.0 PSF	SEQN-	156900
DUR.FAC.	1.25	FROM	CDM
SPACING	24.0"	JREF-	1T69215_Z02

THIS DWG PREPARED FROM COMPUTER INPUT (LOADS & DIMENSIONS) SUBMITTED BY TRUSS MFR.

Top chord 2x4 SP #2 N
Bot chord 2x4 SP #2 N
Webs 2x4 SP #2 N

Wind reactions based on MWFRS pressures.

(A) Continuous lateral bracing equally spaced on member.

Deflection meets L/360 live and L/240 total load.

The overall height of this truss excluding overhang is 8-0-3.

110 mph wind, 15.00 ft mean hgt, ASCE 7-02, CLOSED bldg, not located within 4.50 ft from roof edge, CAT II, EXP B, wind TC DL=5.0 psf, wind BC DL=5.0 psf.

Right end vertical not exposed to wind pressure.

In lieu of structural panels use purlins to brace all flat TC @ 24" OC.

Plates sized for a minimum of 3.00 sq.in./piece.

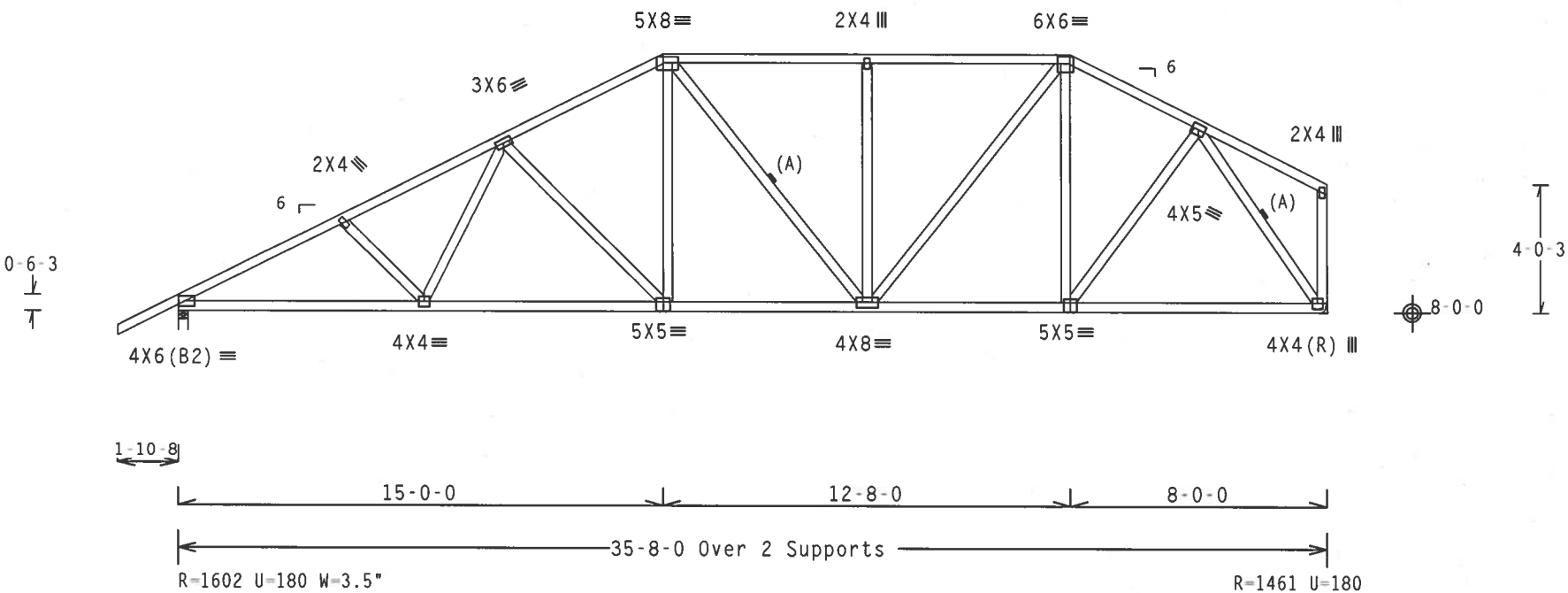

Design Crit: TPI-2002(STD)/FBC

PLT TYP. Wave\R Cq/RT=1.00(1.25)/10(0) 7.25.0502.23 QTY:1 FL/-/5/-/E/R/- Scale =.1875"/Ft.

ALPINE

ITW Building Components Group, Inc.
Haines City, FL 33844
FL Certificate of Authorization # 567

WARNING TRUSSES REQUIRE EXTREME CARE IN FABRICATION, HANDLING, SHIPPING, INSTALLING AND BRACING. REFER TO BCSI (BUILDING COMPONENT SAFETY INFORMATION), PUBLISHED BY TPI (TRUSS PLATE INSTITUTE, 218 NORTH LEE STREET, SUITE 312, ALEXANDRIA, VA, 22314) AND WTCA (WOOD TRUSS COUNCIL OF AMERICA, 6300 ENTERPRISE LANE, MADISON, WI 53719) FOR SAFETY PRACTICES PRIOR TO PERFORMING THESE FUNCTIONS. UNLESS OTHERWISE INDICATED TOP CHORD SHALL HAVE PROPERLY ATTACHED STRUCTURAL PANELS AND BOTTOM CHORD SHALL HAVE A PROPERLY ATTACHED RIGID CEILING.

IMPORTANTFURNISH A COPY OF THIS DESIGN TO THE INSTALLATION CONTRACTOR. ITW BCG, INC. SHALL NOT BE RESPONSIBLE FOR ANY DEVIATION FROM THIS DESIGN; ANY FAILURE TO BUILD THE TRUSS IN CONFORMANCE WITH TPI; OR FABRICATING, HANDLING, SHIPPING, INSTALLING & BRACING OF TRUSSES.
DESIGN CONFORMS WITH APPLICABLE PROVISIONS OF NDS (NATIONAL DESIGN SPEC. BY AF&PA) AND TPI. ITW BCG CONNECTOR PLATES ARE MADE OF 20/18/16GA (W.H/SS/K) ASTM A653 GRADE 40/60 (W. K/H.SS) GALV. STEEL. APPLY PLATES TO EACH FACE OF TRUSS AND, UNLESS OTHERWISE LOCATED ON THIS DESIGN, POSITION PER DRAWINGS 160A-Z. ANY INSPECTION OF PLATES FOLLOWED BY (1) SHALL BE PER ANNEX A3 OF TPI1-2002 SEC.3. A SEAL ON THIS DRAWING INDICATES ACCEPTANCE OF PROFESSIONAL ENGINEERING RESPONSIBILITY SOLELY FOR THE TRUSS COMPONENT DESIGN SHOWN. THE SUITABILITY AND USE OF THIS COMPONENT FOR ANY BUILDING IS THE RESPONSIBILITY OF THE BUILDING DESIGNER PER ANSI/TPI 1 SEC. 2.

JAMES F. COLLINS JR. LICENSE No. 52212 STATE OF FLORIDA PROFESSIONAL ENGINEER
Apr 6, 2007

TC LL	20.0 PSF	REF	R215-- 39460
TC DL	10.0 PSF	DATE	04/05/07
BC DL	10.0 PSF	DRW	HCUSR215 07095025
BC LL	0.0 PSF	HC-ENG	JK/AP
TOT.LD.	40.0 PSF	SEQN-	156907
DUR.FAC.	1.25	FROM	CDM
SPACING	24.0"	JREF-	1T69215_Z02

THIS DWG PREPARED FROM COMPUTER INPUT (LOADS & DIMENSIONS) SUBMITTED BY TRUSS MFR.

Top chord 2x4 SP #2 N :T1 2x8 SP SS:
Bot chord 2x4 SP #2 N
Webs 2x4 SP #2 N

Wind reactions based on MWFRS pressures.

Calculated horizontal deflection is 0.15" due to live load and 0.16" due to dead load.

Deflection meets L/360 live and L/240 total load.

The overall height of this truss excluding overhang is 7-0-3.

110 mph wind, 15.00 ft mean hgt, ASCE 7-02, CLOSED bldg, not located within 4.50 ft from roof edge, CAT II, EXP B, wind TC DL=5.0 psf, wind BC DL=5.0 psf.

Right end vertical not exposed to wind pressure.

In lieu of structural panels use purlins to brace all flat TC @ 24" OC.

Plates sized for a minimum of 3.00 sq.in./piece.

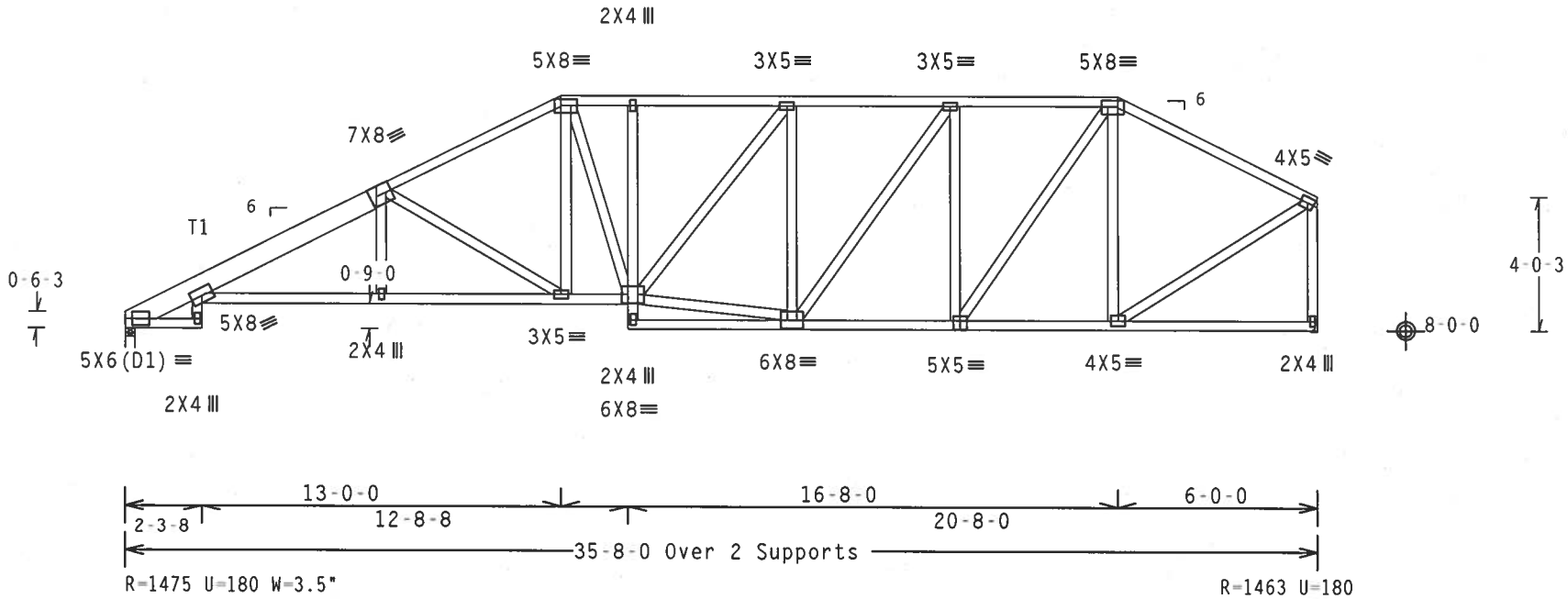

Design Crit: TPI-2002(STD)/FBC

PLT TYP. Wave\R Cq/RT=1.00(1.25)/10(0) 7.25.0502.23 QTY:1 FL/-/5/-/E/R/- Scale =.1875"/Ft.

ALPINE
ITW Building Components Group, Inc.
Haines City, FL 33844
FL Certificate of Authorization # 567

WARNING TRUSSES REQUIRE EXTREME CARE IN FABRICATION, HANDLING, SHIPPING, INSTALLING AND BRACING. REFER TO BCSI (BUILDING COMPONENT SAFETY INFORMATION), PUBLISHED BY TPI (TRUSS PLATE INSTITUTE, 218 NORTH LEE STREET, SUITE 312, ALEXANDRIA, VA. 22314) AND WTCA (WOOD TRUSS COUNCIL OF AMERICA, 6300 ENTERPRISE LANE, MADISON, WI 53719) FOR SAFETY PRACTICES PRIOR TO PERFORMING THESE FUNCTIONS. UNLESS OTHERWISE INDICATED TOP CHORD SHALL HAVE PROPERLY ATTACHED STRUCTURAL PANELS AND BOTTOM CHORD SHALL HAVE A PROPERLY ATTACHED RIGID CEILING.

IMPORTANTFURNISH A COPY OF THIS DESIGN TO THE INSTALLATION CONTRACTOR. ITW BCG, INC. SHALL NOT BE RESPONSIBLE FOR ANY DEVIATION FROM THIS DESIGN; ANY FAILURE TO BUILD THE TRUSS IN COMFORMANCE WITH TPI; OR FABRICATING, HANDLING, SHIPPING, INSTALLING & BRACING OF TRUSSES.
DESIGN CONFORMS WITH APPLICABLE PROVISIONS OF NDS (NATIONAL DESIGN SPEC. BY AF&PA) AND TPI. ITW BCG CONNECTOR PLATES ARE MADE OF 20/18/16GA (W,H/SS/K) ASTM A653 GRADE 40/60 (W, K/H,SS) GALV. STEEL. APPLY PLATES TO EACH FACE OF TRUSS AND, UNLESS OTHERWISE LOCATED ON THIS DESIGN, POSITION PER DRAWINGS 160A-Z. ANY INSPECTION OF PLATES FOLLOWED BY (1) SHALL BE PER ANNEX A3 OF TP11-2002 SEC.3. A SEAL ON THIS DRAWING INDICATES ACCEPTANCE OF PROFESSIONAL ENGINEERING RESPONSIBILITY SOLELY FOR THE TRUSS COMPONENT DESIGN SHOWN. THE SUITABILITY AND USE OF THIS COMPONENT FOR ANY BUILDING IS THE RESPONSIBILITY OF THE BUILDING DESIGNER PER ANSI/TPI 1 SEC. 2.

JAMES F. COLLINS, JR. LICENSE No. 52212 STATE OF FLORIDA PROFESSIONAL ENGINEER

Apr

TC LL	20.0 PSF	REF	R215-- 39461
TC DL	10.0 PSF	DATE	04/05/07
BC DL	10.0 PSF	DRW	HCUSR215 07095024
BC LL	0.0 PSF	HC-ENG	JK/AP
TOT.LD.	40.0 PSF	SEQN-	156915
DUR.FAC.	1.25	FROM	CDM
SPACING	24.0"	JREF-	1T69215_Z02

THIS DWG PREPARED FROM COMPUTER INPUT (LOADS & DIMENSIONS) SUBMITTED BY TRUSS MFR.

Top chord 2x4 SP #2 N :T1 2x8 SP SS:
Bot chord 2x4 SP #2 N
Webs 2x4 SP #2 N

Wind reactions based on MWFRS pressures.

Calculated horizontal deflection is 0.15" due to live load and 0.16" due to dead load.

(A) Continuous lateral bracing equally spaced on member.

Deflection meets L/360 live and L/240 total load.

The overall height of this truss excluding overhang is 6-0-3.

(**) 1 plate(s) require special positioning. Refer to scaled plate plot details for special positioning requirements.

110 mph wind, 15.00 ft mean hgt, ASCE 7-02, CLOSED bldg, not located within 4.50 ft from roof edge, CAT II, EXP B, wind TC DL=5.0 psf, wind BC DL=5.0 psf.

Right end vertical not exposed to wind pressure.

In lieu of structural panels use purlins to brace all flat TC @ 24" OC.

Plates sized for a minimum of 3.00 sq.in./piece.

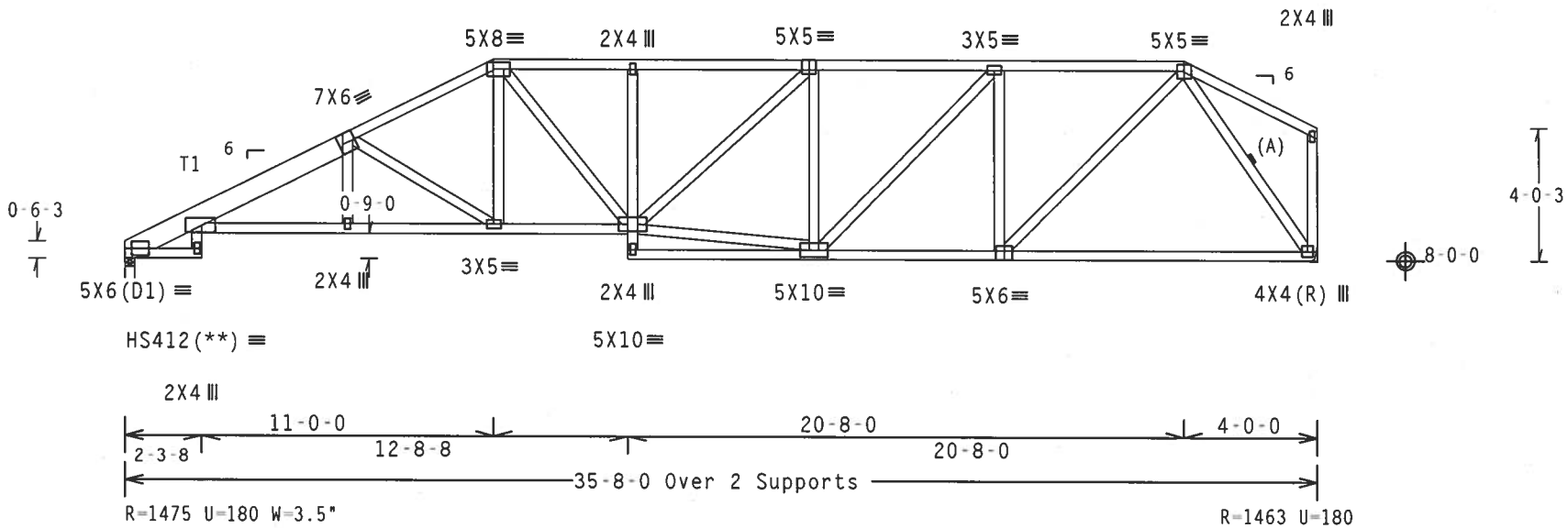

Design Crit: TPI-2002(STD)/FBC

PLT TYP. 20 Gauge HS,Wave\R Cq/RT=1.00(1.25)/10(0) 7.25.0502 QTY:1 FL/-/5/-/E/R/- Scale =.1875"/Ft.

ALPINE
ITW Building Components Group, Inc.
Haines City, FL 33844
FL Certificate of Authorization # 567

WARNING TRUSSES REQUIRE EXTREME CARE IN FABRICATION, HANDLING, SHIPPING, INSTALLING AND BRACING. REFER TO BCSI (BUILDING COMPONENT SAFETY INFORMATION), PUBLISHED BY TPI (TRUSS PLATE INSTITUTE, 218 NORTH LEE STREET, SUITE 312, ALEXANDRIA, VA, 22314) AND WTCA (WOOD TRUSS COUNCIL OF AMERICA, 6300 ENTERPRISE LANE, MADISON, WI 53719) FOR SAFETY PRACTICES PRIOR TO PERFORMING THESE FUNCTIONS. UNLESS OTHERWISE INDICATED TOP CHORD SHALL HAVE PROPERLY ATTACHED STRUCTURAL PANELS AND BOTTOM CHORD SHALL HAVE A PROPERLY ATTACHED RIGID CEILING.

IMPORTANTFURNISH A COPY OF THIS DESIGN TO THE INSTALLATION CONTRACTOR. ITW BCG, INC. SHALL NOT BE RESPONSIBLE FOR ANY DEVIATION FROM THIS DESIGN; ANY FAILURE TO BUILD THE TRUSS IN CONFORMANCE WITH TPI; OR FABRICATING, HANDLING, SHIPPING, INSTALLING & BRACING OF TRUSSES.
DESIGN CONFORMS WITH APPLICABLE PROVISIONS OF NDS (NATIONAL DESIGN SPEC. BY AF&PA) AND TPI. ITW BCG CONNECTOR PLATES ARE MADE OF 20/18/16GA (W,H/SS/K) ASTM A653 GRADE 40/60 (W, K/H,SS) GALV. STEEL. APPLY PLATES TO EACH FACE OF TRUSS AND, UNLESS OTHERWISE LOCATED ON THIS DESIGN, POSITION PER DRAWINGS 160A-Z. ANY INSPECTION OF PLATES FOLLOWED BY (1) SHALL BE PER ANNEX A3 OF TPI1-2002 SEC.3. A SEAL ON THIS DRAWING INDICATES ACCEPTANCE OF PROFESSIONAL ENGINEERING RESPONSIBILITY SOLELY FOR THE TRUSS COMPONENT DESIGN SHOWN. THE SUITABILITY AND USE OF THIS COMPONENT FOR ANY BUILDING IS THE RESPONSIBILITY OF THE BUILDING DESIGNER PER ANSI/TPI 1 SEC. 2.

JAMES F. COLLINS, JR. LICENSE No.32212 STATE OF FLORIDA PROFESSIONAL ENGINEER
Apr 05 '07

TC LL	20.0 PSF	REF R215-- 39462
TC DL	10.0 PSF	DATE 04/05/07
BC DL	10.0 PSF	DRW HCUSR215 07095023
BC LL	0.0 PSF	HC-ENG JK/AP
TOT.LD.	40.0 PSF	SEQN- 156924
DUR.FAC.	1.25	FROM CDM
SPACING	24.0"	JREF- 1T69215_Z02

Top chord 2x4 SP #2 N :T1 2x8 SP SS:
Bot chord 2x4 SP #2 N
Webs 2x4 SP #2 N

Wind reactions based on MWFRS pressures.

Calculated horizontal deflection is 0.15" due to live load and 0.15" due to dead load.

In lieu of structural panels use purlins to brace all flat TC @ 24" OC.

The overall height of this truss excluding overhang is 5-0-3.

(**) 1 plate(s) require special positioning. Refer to scaled plate plot details for special positioning requirements.

110 mph wind, 15.00 ft mean hgt, ASCE 7-02, CLOSED bldg, not located within 4.50 ft from roof edge, CAT II, EXP B, wind TC DL=5.0 psf, wind BC DL=5.0 psf.

Right end vertical not exposed to wind pressure.

Deflection meets L/360 live and L/240 total load.

Plates sized for a minimum of 3.00 sq.in./piece.

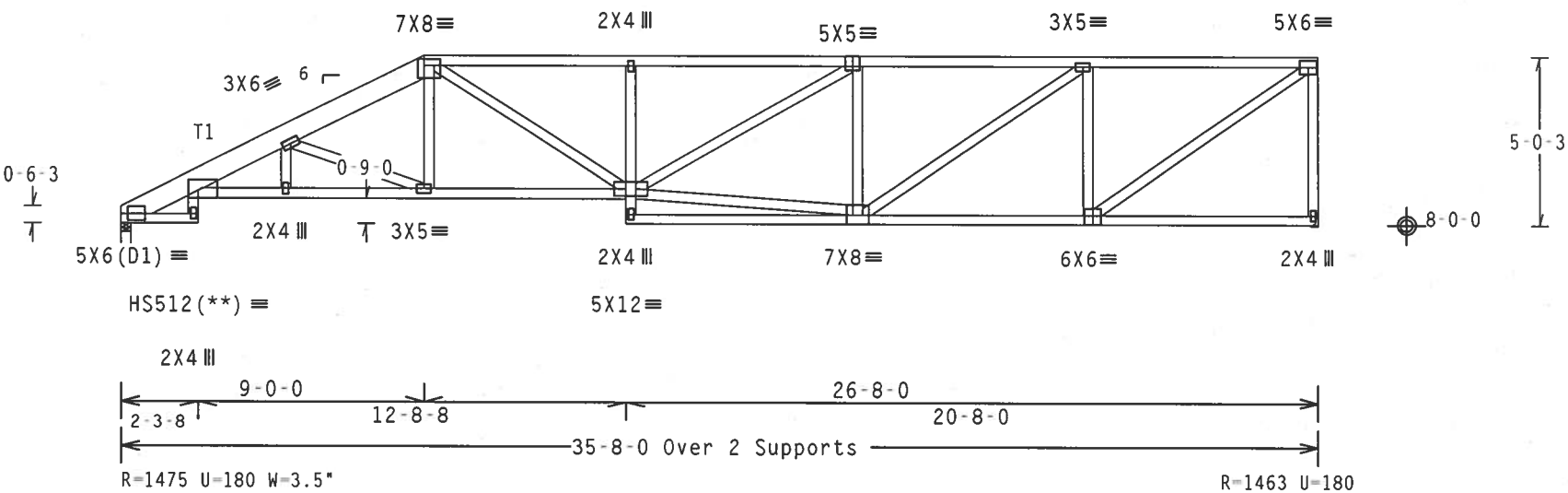

Design Crit: TPI-2002(STD)/FBC

PLT TYP. 20 Gauge HS,Wave\R Cq/RT=1.00(1.25)/10(0) 7.25.0502 QTY:1 FL/-/5/-/E/R/- Scale =.1875"/Ft.

ALPINE
ITW Building Components Group, Inc.
Haines City, FL 33844
FL Certificate of Authorization # 567

WARNING TRUSSES REQUIRE EXTREME CARE IN FABRICATION, HANDLING, SHIPPING, INSTALLING AND BRACING. REFER TO BCSI (BUILDING COMPONENT SAFETY INFORMATION), PUBLISHED BY TPI (TRUSS PLATE INSTITUTE, 218 NORTH LEE STREET, SUITE 312, ALEXANDRIA, VA, 22314) AND WTCA (WOOD TRUSS COUNCIL OF AMERICA, 6300 ENTERPRISE LANE, MADISON, WI 53719) FOR SAFETY PRACTICES PRIOR TO PERFORMING THESE FUNCTIONS. UNLESS OTHERWISE INDICATED TOP CHORD SHALL HAVE PROPERLY ATTACHED STRUCTURAL PANELS AND BOTTOM CHORD SHALL HAVE A PROPERLY ATTACHED RIGID CEILING.

IMPORTANTFURNISH A COPY OF THIS DESIGN TO THE INSTALLATION CONTRACTOR. ITW BCG, INC. SHALL NOT BE RESPONSIBLE FOR ANY DEVIATION FROM THIS DESIGN; ANY FAILURE TO BUILD THE TRUSS IN COMFORMANCE WITH TPI; OR FABRICATING, HANDLING, SHIPPING, INSTALLING & BRACING OF TRUSSES.
DESIGN CONFORMS WITH APPLICABLE PROVISIONS OF NDS (NATIONAL DESIGN SPEC. BY AF&PA) AND TPI. ITW BCG CONNECTOR PLATES ARE MADE OF 20/18/16GA (W.H/SS/K) ASTM A653 GRADE 40/60 (W. K/H.SS) GALV. STEEL. APPLY PLATES TO EACH FACE OF TRUSS AND, UNLESS OTHERWISE LOCATED ON THIS DESIGN, POSITION PER DRAWINGS 160A-Z. ANY INSPECTION OF PLATES FOLLOWED BY (1) SHALL BE PER ANNEX A3 OF TPI1-2002 SEC.3. A SEAL ON THIS DRAWING INDICATES ACCEPTANCE OF PROFESSIONAL ENGINEERING RESPONSIBILITY SOLELY FOR THE TRUSS COMPONENT DESIGN SHOWN. THE SUITABILITY AND USE OF THIS COMPONENT FOR ANY BUILDING IS THE RESPONSIBILITY OF THE BUILDING DESIGNER PER ANSI/TPI 1 SEC. 2.

JAMES F. COLLINS JR. LICENSE No. 52212 STATE OF FLORIDA PROFESSIONAL ENGINEER
Apr 05 07

TC LL	20.0 PSF	REF	R215-- 39463
TC DL	10.0 PSF	DATE	04/05/07
BC DL	10.0 PSF	DRW	HCUSR215 07095022
BC LL	0.0 PSF	HC-ENG	JK/AP
TOT.LD.	40.0 PSF	SEQN-	156936
DUR.FAC.	1.25	FROM	CDM
SPACING	24.0"	JREF-	1T69215_Z02

THIS DWG PREPARED FROM COMPUTER INPUT (LOADS & DIMENSIONS) SUBMITTED BY TRUSS MFR.

Top chord 2x6 SP #2 N :T1 2x8 SP SS:
Bot chord 2x6 SP #2 N
Webs 2x4 SP #2 N

(**) 1 plate(s) require special positioning. Refer to scaled plate plot details for special positioning requirements.

110 mph wind, 15.00 ft mean hgt, ASCE 7-02, CLOSED bldg, Located anywhere in roof, CAT II, EXP B, wind TC DL=5.0 psf, wind BC DL=5.0 psf.

Calculated horizontal deflection is 0.15" due to live load and 0.16" due to dead load.

#1 hip supports 7-0-0 jacks W/2 panel TC and no end vert.

Left side jacks have 7-0-0 setback with 0-0-0 cant and 1-10-8 overhang. End jacks have 7-0-0 setback with 0-0-0 cant and 1-10-8 overhang. Right side jacks have 0-0-0 setback with 0-0-0 cant and 0-0-0 overhang.

2 COMPLETE TRUSSES REQUIRED

Nailing Schedule: (0.131"x3"_Gun_nails)
Top Chord: 1 Row @12.00" o.c.
Bot Chord: 1 Row @12.00" o.c.
Webs : 1 Row @ 4" o.c.
Use equal spacing between rows and stagger nails in each row to avoid splitting.

Wind reactions based on MWFRS pressures.

Right end vertical not exposed to wind pressure.

In lieu of structural panels use purlins to brace all flat TC @ 24" OC.

Deflection meets L/360 live and L/240 total load.

Plates sized for a minimum of 3.00 sq.in./piece.

The overall height of this truss excluding overhang is 4-0-3.

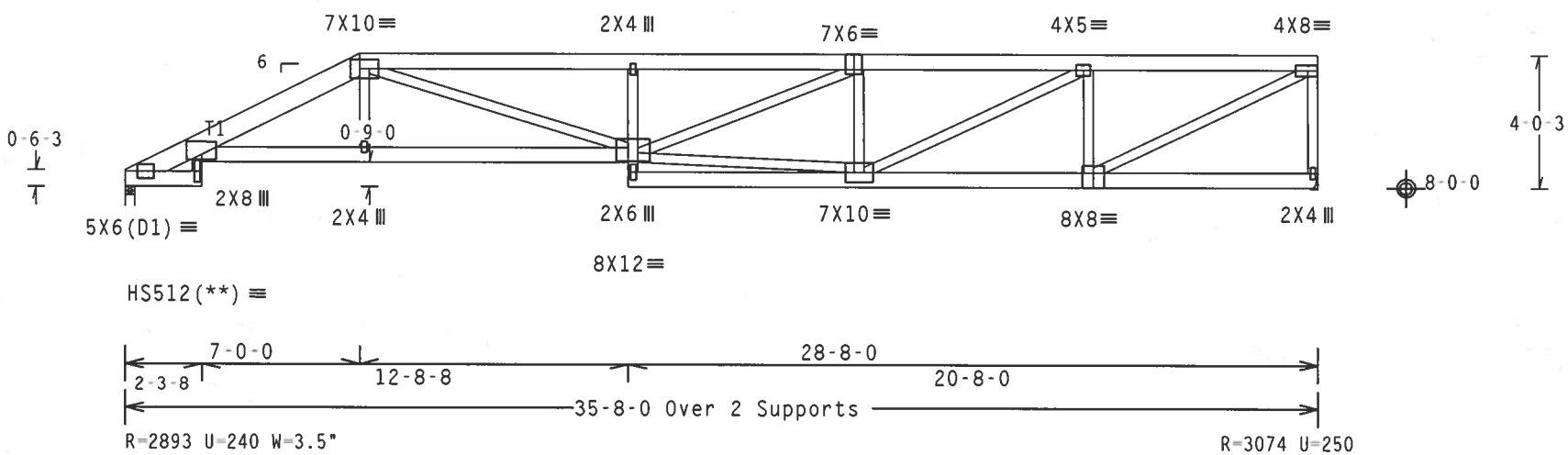

Design Crit: TPI-2002(STD)/FBC

PLT TYP. 20 Gauge HS,Wave\R Cq/RT=1.00(1.25)/10(0) 7.25.0502.22 QTY:1 FL/-/5/-/E/R/- Scale =.1875"/Ft.

ALPINE
ITW Building Components Group, Inc.
Haines City, FL 33844
FL Certificate of Authorization # 567

WARNING TRUSSES REQUIRE EXTREME CARE IN FABRICATION, HANDLING, SHIPPING, INSTALLING AND BRACING. REFER TO BCSI (BUILDING COMPONENT SAFETY INFORMATION), PUBLISHED BY TPI (TRUSS PLATE INSTITUTE, 218 NORTH LEE STREET, SUITE 312, ALEXANDRIA, VA, 22314) AND WTCA (WOOD TRUSS COUNCIL OF AMERICA, 6300 ENTERPRISE LANE, MADISON, WI 53719) FOR SAFETY PRACTICES PRIOR TO PERFORMING THESE FUNCTIONS. UNLESS OTHERWISE INDICATED TOP CHORD SHALL HAVE PROPERLY ATTACHED STRUCTURAL PANELS AND BOTTOM CHORD SHALL HAVE A PROPERLY ATTACHED RIGID CEILING.

IMPORTANTFURNISH A COPY OF THIS DESIGN TO THE INSTALLATION CONTRACTOR. ITW BCG, INC. SHALL NOT BE RESPONSIBLE FOR ANY DEVIATION FROM THIS DESIGN; ANY FAILURE TO BUILD THE TRUSS IN CONFORMANCE WITH TPI; OR FABRICATING, HANDLING, SHIPPING, INSTALLING & BRACING OF TRUSSES.
DESIGN CONFORMS WITH APPLICABLE PROVISIONS OF NDS (NATIONAL DESIGN SPEC. BY AF&PA) AND TPI. ITW BCG CONNECTOR PLATES ARE MADE OF 20/18/16GA (W.H/SS/K) ASTM A653 GRADE 40/60 (W. K/H.SS) GALV. STEEL. APPLY PLATES TO EACH FACE OF TRUSS AND, UNLESS OTHERWISE LOCATED ON THIS DESIGN. POSITION PER DRAWINGS 160A-Z. ANY INSPECTION OF PLATES FOLLOWED BY (1) SHALL BE PER ANNEX A3 OF TPI1-2002 SEC.3. A SEAL ON THIS DRAWING INDICATES ACCEPTANCE OF PROFESSIONAL ENGINEERING RESPONSIBILITY SOLELY FOR THE TRUSS COMPONENT DESIGN SHOWN. THE SUITABILITY AND USE OF THIS COMPONENT FOR ANY BUILDING IS THE RESPONSIBILITY OF THE BUILDING DESIGNER PER ANSI/TPI 1 SEC. 2.

JAMES F. COLLINS, JR. LICENSE No. 52212 STATE OF FLORIDA PROFESSIONAL ENGINEER

Apr 0

TC LL	20.0 PSF	REF	R215-- 39464
TC DL	10.0 PSF	DATE	04/05/07
BC DL	10.0 PSF	DRW	HCUSR215 07095010
BC LL	0.0 PSF	HC-ENG	JK/AP
TOT.LD.	40.0 PSF	SEQN-	156946
DUR.FAC.	1.25	FROM	CDM
SPACING	24.0"	JREF-	1T69215_Z02

Top chord 2x4 SP #2 N
Bot chord 2x4 SP #2 N

Wind reactions based on MWFRS pressures.

Plates sized for a minimum of 3.00 sq.in./piece.

110 mph wind, 15.00 ft mean hgt, ASCE 7-02, CLOSED bldg, Located anywhere in roof, CAT II, EXP B, wind TC DL=5.0 psf, wind BC DL=5.0 psf. Iw=1.00 GCpi(+/-)=0.18

Deflection meets L/360 live and L/240 total load.

The overall height of this truss excluding overhang is 1-0-3.

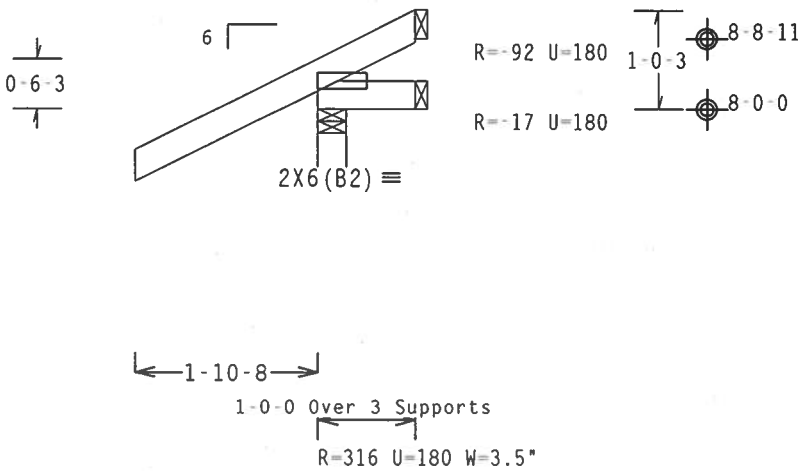

Design Crit: TPI-2002(STD)/FBC

PLT TYP. Wave\R Cq/RT=1.00(1.25)/10(0) 7.25.0502 QTY:10 FL/-/5/-/E/R/- Scale =.5"/Ft.

ALPINE
ITW Building Components Group, Inc.
Haines City, FL 33844
FL Certificate of Authorization # 567

WARNING TRUSSES REQUIRE EXTREME CARE IN FABRICATION, HANDLING, SHIPPING, INSTALLING AND BRACING. REFER TO BCSI (BUILDING COMPONENT SAFETY INFORMATION), PUBLISHED BY TPI (TRUSS PLATE INSTITUTE, 218 NORTH LEE STREET, SUITE 312, ALEXANDRIA, VA, 22314) AND WTCA (WOOD TRUSS COUNCIL OF AMERICA, 6300 ENTERPRISE LANE, MADISON, WI 53719) FOR SAFETY PRACTICES PRIOR TO PERFORMING THESE FUNCTIONS. UNLESS OTHERWISE INDICATED TOP CHORD SHALL HAVE PROPERLY ATTACHED STRUCTURAL PANELS AND BOTTOM CHORD SHALL HAVE A PROPERLY ATTACHED RIGID CEILING.

IMPORTANTFURNISH A COPY OF THIS DESIGN TO THE INSTALLATION CONTRACTOR. ITW BCG, INC. SHALL NOT BE RESPONSIBLE FOR ANY DEVIATION FROM THIS DESIGN; ANY FAILURE TO BUILD THE TRUSS IN COMFORMANCE WITH TPI; OR FABRICATING, HANDLING, SHIPPING, INSTALLING & BRACING OF TRUSSES.
DESIGN CONFORMS WITH APPLICABLE PROVISIONS OF NDS (NATIONAL DESIGN SPEC, BY AF&PA) AND TPI. ITW BCG CONNECTOR PLATES ARE MADE OF 20/18/16GA (W,H/SS/K) ASTM A653 GRADE 40/60 (W, K/H,SS) GALV. STEEL. APPLY PLATES TO EACH FACE OF TRUSS AND, UNLESS OTHERWISE LOCATED ON THIS DESIGN, POSITION PER DRAWINGS 160A-Z. ANY INSPECTION OF PLATES FOLLOWED BY (1) SHALL BE PER ANNEX A3 OF TPI1-2002 SEC.3. A SEAL ON THIS DRAWING INDICATES ACCEPTANCE OF PROFESSIONAL ENGINEERING RESPONSIBILITY SOLELY FOR THE TRUSS COMPONENT DESIGN SHOWN. THE SUITABILITY AND USE OF THIS COMPONENT FOR ANY BUILDING IS THE RESPONSIBILITY OF THE BUILDING DESIGNER PER ANSI/TPI 1 SEC. 2.

JAMES F. COLLINS, JR. LICENSE No. 52212 STATE OF FLORIDA PROFESSIONAL ENGINEER
Apr 05 07

TC LL	20.0 PSF	REF	R215-- 39465
TC DL	10.0 PSF	DATE	04/05/07
BC DL	10.0 PSF	DRW	HCUSR215 07095007
BC LL	0.0 PSF	HC-ENG	EC/WHK
TOT.LD.	40.0 PSF	SEQN-	143880
DUR.FAC.	1.25	FROM	CDM
SPACING	24.0"	JREF-	1T69215_Z02

Top chord 2x4 SP #2 N
Bot chord 2x4 SP #2 N

Wind reactions based on MWFRS pressures.

Plates sized for a minimum of 3.00 sq.in./piece.

110 mph wind, 15.00 ft mean hgt, ASCE 7-02, CLOSED bldg, Located anywhere in roof, CAT II, EXP B, wind TC DL=5.0 psf, wind BC DL=5.0 psf. Iw=1.00 GCpi(+/-)=0.18

Deflection meets L/360 live and L/240 total load.

The overall height of this truss excluding overhang is 2-0-3.

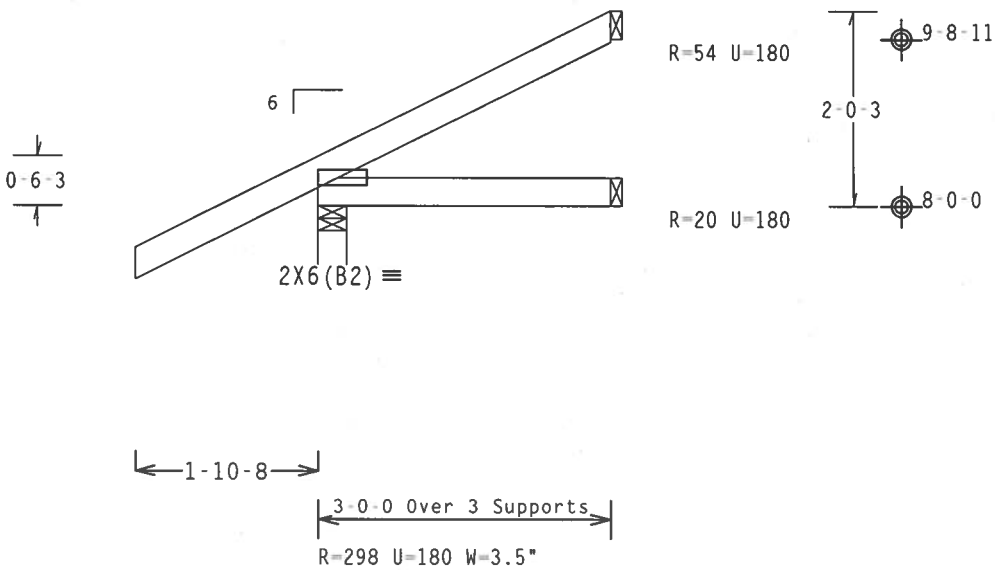

Design Crit: TPI-2002(STD)/FBC
Cq/RT=1.00(1.25)/10(0) 7.25.0502.23

PLT TYP. Wave\R QTY:8 FL/-/5/-/E/R/- Scale =.5"/Ft.

ALPINE
ITW Building Components Group, Inc.
Haines City, FL 33844
FL Certificate of Authorization # 567

WARNING TRUSSES REQUIRE EXTREME CARE IN FABRICATION, HANDLING, SHIPPING, INSTALLING AND BRACING. REFER TO BCSI (BUILDING COMPONENT SAFETY INFORMATION), PUBLISHED BY TPI (TRUSS PLATE INSTITUTE, 218 NORTH LEE STREET, SUITE 312, ALEXANDRIA, VA, 22314) AND WTCA (WOOD TRUSS COUNCIL OF AMERICA, 6300 ENTERPRISE LANE, MADISON, WI 53719) FOR SAFETY PRACTICES PRIOR TO PERFORMING THESE FUNCTIONS. UNLESS OTHERWISE INDICATED TOP CHORD SHALL HAVE PROPERLY ATTACHED STRUCTURAL PANELS AND BOTTOM CHORD SHALL HAVE A PROPERLY ATTACHED RIGID CEILING.

IMPORTANTFURNISH A COPY OF THIS DESIGN TO THE INSTALLATION CONTRACTOR. ITW BCG, INC. SHALL NOT BE RESPONSIBLE FOR ANY DEVIATION FROM THIS DESIGN; ANY FAILURE TO BUILD THE TRUSS IN COMFORMANCE WITH TPI; OR FABRICATING, HANDLING, SHIPPING, INSTALLING & BRACING OF TRUSSES.
DESIGN CONFORMS WITH APPLICABLE PROVISIONS OF NDS (NATIONAL DESIGN SPEC. BY AF&PA) AND TPI. ITW BCG CONNECTOR PLATES ARE MADE OF 20/18/16GA (W,H/SS/K) ASTM A653 GRADE 40/60 (W, K/H,SS) GALV. STEEL. APPLY PLATES TO EACH FACE OF TRUSS AND. UNLESS OTHERWISE LOCATED ON THIS DESIGN, POSITION PER DRAWINGS 160A-Z. ANY INSPECTION OF PLATES FOLLOWED BY (1) SHALL BE PER ANNEX A3 OF TPI1-2002 SEC.3. A SEAL ON THIS DRAWING INDICATES ACCEPTANCE OF PROFESSIONAL ENGINEERING RESPONSIBILITY SOLELY FOR THE TRUSS COMPONENT DESIGN SHOWN. THE SUITABILITY AND USE OF THIS COMPONENT FOR ANY BUILDING IS THE RESPONSIBILITY OF THE BUILDING DESIGNER PER ANSI/TPI 1 SEC. 2.

JAMES F. COLLINS, JR. LICENSE No. 52212 STATE OF FLORIDA PROFESSIONAL ENGINEER
Apr 09,2007

TC LL	20.0 PSF	REF	R215-- 39466
TC DL	10.0 PSF	DATE	04/05/07
BC DL	10.0 PSF	DRW	HCUSR215 07095003
BC LL	0.0 PSF	HC-ENG	EC/WHK *
TOT.LD.	40.0 PSF	SEQN-	143883
DUR.FAC.	1.25	FROM	CDM
SPACING	24.0"	JREF-	1T69215_Z02

Top chord 2x4 SP #2 N
Bot chord 2x4 SP #2 N
Webs 2x4 SP #2 N

Wind reactions based on MWFRS pressures.

Plates sized for a minimum of 3.00 sq.in./piece.

110 mph wind, 15.00 ft mean hgt, ASCE 7-02, CLOSED bldg, Located anywhere in roof, CAT II, EXP B, wind TC DL=5.0 psf, wind BC DL=5.0 psf. Iw=1.00 GCpi(+/-)=0.18

Deflection meets L/360 live and L/240 total load.

The overall height of this truss excluding overhang is 2-0-3.

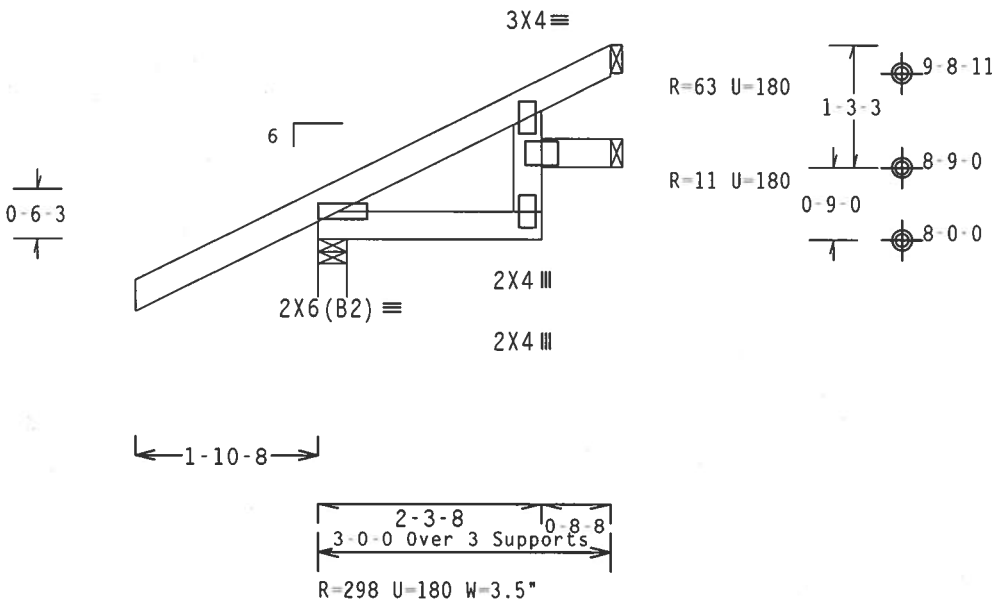

Design Crit: TPI-2002(STD)/FBC

PLT TYP. Wave\R Cq/RT=1.00(1.25)/10(0) 7.25.0502 QTY:2 FL/-/5/-/E/R/- Scale =.5"/Ft.

ALPINE
ITW Building Components Group, Inc.
Haines City, FL 33844
FL Certificate of Authorization # 567

WARNING TRUSSES REQUIRE EXTREME CARE IN FABRICATION, HANDLING, SHIPPING, INSTALLING AND BRACING. REFER TO BCSI (BUILDING COMPONENT SAFETY INFORMATION), PUBLISHED BY TPI (TRUSS PLATE INSTITUTE, 218 NORTH LEE STREET, SUITE 312, ALEXANDRIA, VA, 22314) AND WTCA (WOOD TRUSS COUNCIL OF AMERICA, 6300 ENTERPRISE LANE, MADISON, WI 53719) FOR SAFETY PRACTICES PRIOR TO PERFORMING THESE FUNCTIONS. UNLESS OTHERWISE INDICATED TOP CHORD SHALL HAVE PROPERLY ATTACHED STRUCTURAL PANELS AND BOTTOM CHORD SHALL HAVE A PROPERLY ATTACHED RIGID CEILING.

IMPORTANTFURNISH A COPY OF THIS DESIGN TO THE INSTALLATION CONTRACTOR. ITW BCG, INC. SHALL NOT BE RESPONSIBLE FOR ANY DEVIATION FROM THIS DESIGN; ANY FAILURE TO BUILD THE TRUSS IN COMFORMANCE WITH TPI; OR FABRICATING, HANDLING, SHIPPING, INSTALLING & BRACING OF TRUSSES.
DESIGN CONFORMS WITH APPLICABLE PROVISIONS OF NDS (NATIONAL DESIGN SPEC. BY AF&PA) AND TPI. ITW BCG CONNECTOR PLATES ARE MADE OF 20/18/16GA (W,H/SS/K) ASTM A653 GRADE 40/60 (W, K/H,SS) GALV. STEEL. APPLY PLATES TO EACH FACE OF TRUSS AND, UNLESS OTHERWISE LOCATED ON THIS DESIGN, POSITION PER DRAWINGS 160A-Z. ANY INSPECTION OF PLATES FOLLOWED BY (1) SHALL BE PER ANNEX A3 OF TPI1-2002 SEC.3. A SEAL ON THIS DRAWING INDICATES ACCEPTANCE OF PROFESSIONAL ENGINEERING RESPONSIBILITY SOLELY FOR THE TRUSS COMPONENT DESIGN SHOWN. THE SUITABILITY AND USE OF THIS COMPONENT FOR ANY BUILDING IS THE RESPONSIBILITY OF THE BUILDING DESIGNER PER ANSI/TPI 1 SEC. 2.

JAMES F. COLLINS LICENSE No. 52212 STATE OF FLORIDA PROFESSIONAL ENGINEER
Apr 05 07

TC LL	20.0 PSF	REF	R215-- 39467
TC DL	10.0 PSF	DATE	04/05/07
BC DL	10.0 PSF	DRW	HCUSR215 07095004
BC LL	0.0 PSF	HC-ENG	EC/WHK *
TOT.LD.	40.0 PSF	SEQN-	143892
DUR.FAC.	1.25	FROM	CDM
SPACING	24.0"	JREF-	1T69215_Z02

Top chord 2x4 SP #2 N
Bot chord 2x4 SP #2 N

Wind reactions based on MWFRS pressures.

Plates sized for a minimum of 3.00 sq.in./piece.

110 mph wind, 15.00 ft mean hgt, ASCE 7-02, CLOSED bldg, not located within 4.50 ft from roof edge, CAT II, EXP B, wind TC DL=5.0 psf, wind BC DL=5.0 psf. Iw=1.00 GCpi(+/-)=0.18

Deflection meets L/360 live and L/240 total load.

The overall height of this truss excluding overhang is 3-0-3.

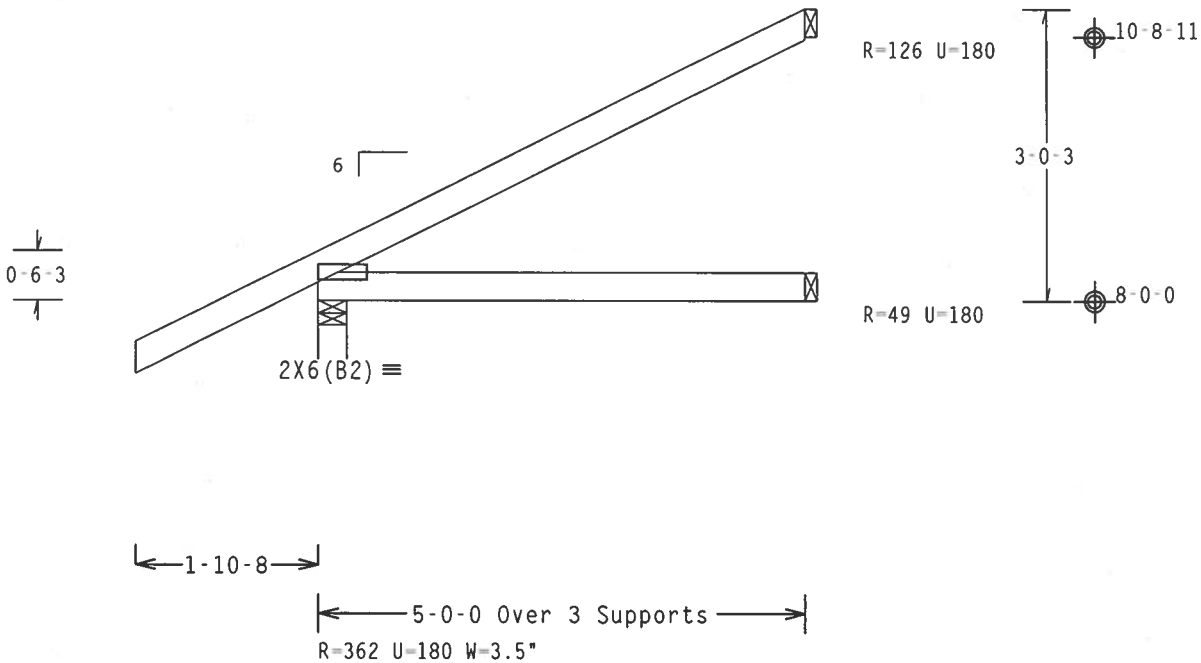

Design Crit: TPI-2002(STD)/FBC

PLT TYP. Wave\R Cq/RT=1.00(1.25)/10(0) 7.25.0502.22 QTY:8 FL/-/5/-/E/R/- Scale =.5"/Ft.

ALPINE
ITW Building Components Group, Inc.
Haines City, FL 33844
FL Certificate of Authorization # 567

WARNING TRUSSES REQUIRE EXTREME CARE IN FABRICATION, HANDLING, SHIPPING, INSTALLING AND BRACING. REFER TO BCSI (BUILDING COMPONENT SAFETY INFORMATION), PUBLISHED BY TPI (TRUSS PLATE INSTITUTE, 218 NORTH LEE STREET, SUITE 312, ALEXANDRIA, VA, 22314) AND WTCA (WOOD TRUSS COUNCIL OF AMERICA, 6300 ENTERPRISE LANE, MADISON, WI 53719) FOR SAFETY PRACTICES PRIOR TO PERFORMING THESE FUNCTIONS. UNLESS OTHERWISE INDICATED TOP CHORD SHALL HAVE PROPERLY ATTACHED STRUCTURAL PANELS AND BOTTOM CHORD SHALL HAVE A PROPERLY ATTACHED RIGID CEILING.

IMPORTANTFURNISH A COPY OF THIS DESIGN TO THE INSTALLATION CONTRACTOR. ITW BCG, INC. SHALL NOT BE RESPONSIBLE FOR ANY DEVIATION FROM THIS DESIGN; ANY FAILURE TO BUILD THE TRUSS IN COMFORMANCE WITH TPI; OR FABRICATING, HANDLING, SHIPPING, INSTALLING & BRACING OF TRUSSES.
DESIGN CONFORMS WITH APPLICABLE PROVISIONS OF NDS (NATIONAL DESIGN SPEC, BY AF&PA) AND TPI. ITW BCG CONNECTOR PLATES ARE MADE OF 20/18/16GA (W.H/SS/K) ASTM A653 GRADE 40/60 (W, K/H,SS) GALV. STEEL. APPLY PLATES TO EACH FACE OF TRUSS AND, UNLESS OTHERWISE LOCATED ON THIS DESIGN, POSITION PER DRAWINGS 160A-Z. ANY INSPECTION OF PLATES FOLLOWED BY (1) SHALL BE PER ANNEX A3 OF TPI1-2002 SEC.3. A SEAL ON THIS DRAWING INDICATES ACCEPTANCE OF PROFESSIONAL ENGINEERING RESPONSIBILITY SOLELY FOR THE TRUSS COMPONENT DESIGN SHOWN. THE SUITABILITY AND USE OF THIS COMPONENT FOR ANY BUILDING IS THE RESPONSIBILITY OF THE BUILDING DESIGNER PER ANSI/TPI 1 SEC. 2.

JAMES F. COLLINS JR. LICENSE No. 52210 STATE OF FLORIDA PROFESSIONAL ENGINEER

Apr 05,2007

TC LL	20.0 PSF	REF	R215-- 39468
TC DL	10.0 PSF	DATE	04/05/07
BC DL	10.0 PSF	DRW	HCUSR215 07095005
BC LL	0.0 PSF	HC-ENG	EC/WHK *
TOT.LD.	40.0 PSF	SEQN-	143886
DUR.FAC.	1.25	FROM	CDM
SPACING	24.0"	JREF-	1T69215_Z02

THIS DWG PREPARED FROM COMPUTER INPUT (LOADS & DIMENSIONS) SUBMITTED BY TRUSS MFR.

Top chord 2x4 SP #2 N
Bot chord 2x4 SP #2 N
Webs 2x4 SP #2 N

Wind reactions based on MWFRS pressures.

Plates sized for a minimum of 3.00 sq.in./piece.

110 mph wind, 15.00 ft mean hgt, ASCE 7-02, CLOSED bldg, not located within 4.50 ft from roof edge, CAT II, EXP B, wind TC DL=5.0 psf, wind BC DL=5.0 psf. Iw=1.00 GCpi(+/-)=0.18

Deflection meets L/360 live and L/240 total load.

The overall height of this truss excluding overhang is 3-0-3.

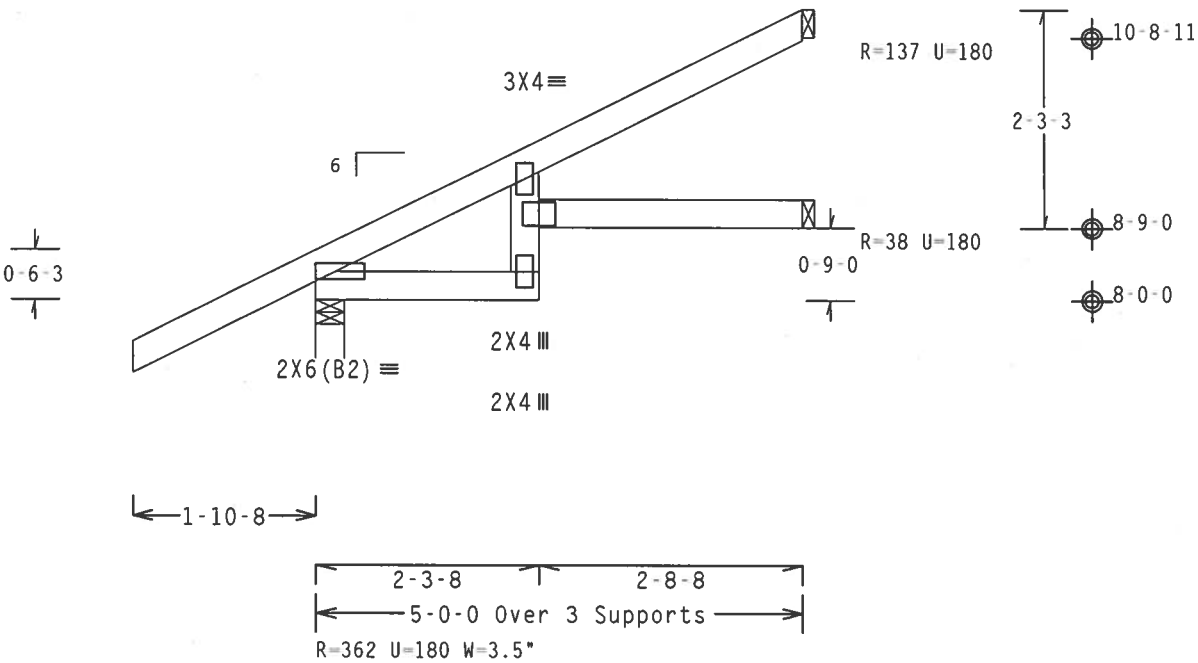

Design Crit: TPI-2002(STD)/FBC

PLT TYP. Wave\R Cq/RT=1.00(1.25)/10(0) 7.25.0502 QTY:2 FL/-/5/-/E/R/- Scale =.5"/Ft.

ALPINE
ITW Building Components Group, Inc.
Haines City, FL 33844
FL Certificate of Authorization # 567

WARNING TRUSSES REQUIRE EXTREME CARE IN FABRICATION, HANDLING, SHIPPING, INSTALLING AND BRACING. REFER TO BCSI (BUILDING COMPONENT SAFETY INFORMATION), PUBLISHED BY TPI (TRUSS PLATE INSTITUTE, 218 NORTH LEE STREET, SUITE 312, ALEXANDRIA, VA, 22314) AND WTCA (WOOD TRUSS COUNCIL OF AMERICA, 6300 ENTERPRISE LANE, MADISON, WI 53719) FOR SAFETY PRACTICES PRIOR TO PERFORMING THESE FUNCTIONS. UNLESS OTHERWISE INDICATED TOP CHORD SHALL HAVE PROPERLY ATTACHED STRUCTURAL PANELS AND BOTTOM CHORD SHALL HAVE A PROPERLY ATTACHED RIGID CEILING.

IMPORTANTFURNISH A COPY OF THIS DESIGN TO THE INSTALLATION CONTRACTOR. ITW BCG, INC. SHALL NOT BE RESPONSIBLE FOR ANY DEVIATION FROM THIS DESIGN; ANY FAILURE TO BUILD THE TRUSS IN CONFORMANCE WITH TPI; OR FABRICATING, HANDLING, SHIPPING, INSTALLING & BRACING OF TRUSSES.
DESIGN CONFORMS WITH APPLICABLE PROVISIONS OF NDS (NATIONAL DESIGN SPEC. BY AF&PA) AND TPI. ITW BCG CONNECTOR PLATES ARE MADE OF 20/18/16GA (W.H/SS/K) ASTM A653 GRADE 40/60 (W. K/H.SS) GALV. STEEL. APPLY PLATES TO EACH FACE OF TRUSS AND, UNLESS OTHERWISE LOCATED ON THIS DESIGN, POSITION PER DRAWINGS 160A-Z. ANY INSPECTION OF PLATES FOLLOWED BY (1) SHALL BE PER ANNEX A3 OF TPI1-2002 SEC.3. A SEAL ON THIS DRAWING INDICATES ACCEPTANCE OF PROFESSIONAL ENGINEERING RESPONSIBILITY SOLELY FOR THE TRUSS COMPONENT DESIGN SHOWN. THE SUITABILITY AND USE OF THIS COMPONENT FOR ANY BUILDING IS THE RESPONSIBILITY OF THE BUILDING DESIGNER PER ANSI/TPI 1 SEC. 2.

JAMES F. COLLINS JR. LICENSED No. 52212 STATE OF FLORIDA PROFESSIONAL ENGINEER
Apr 05 07

TC LL	20.0 PSF	REF	R215-- 39469
TC DL	10.0 PSF	DATE	04/05/07
BC DL	10.0 PSF	DRW	HCUSR215 07095006
BC LL	0.0 PSF	HC-ENG	EC/WHK *
TOT.LD.	40.0 PSF	SEQN-	143895
DUR.FAC.	1.25	FROM	CDM
SPACING	24.0"	JREF-	1T69215_Z02

Top chord 2x4 SP #2 N
Bot chord 2x4 SP #2 N

Wind reactions based on MWFRS pressures.

Plates sized for a minimum of 3.00 sq.in./piece.

110 mph wind, 15.00 ft mean hgt, ASCE 7-02, CLOSED bldg, not located within 4.50 ft from roof edge, CAT II, EXP B, wind TC DL=5.0 psf, wind BC DL=5.0 psf.

Deflection meets L/360 live and L/240 total load.

The overall height of this truss excluding overhang is 4-0-3.

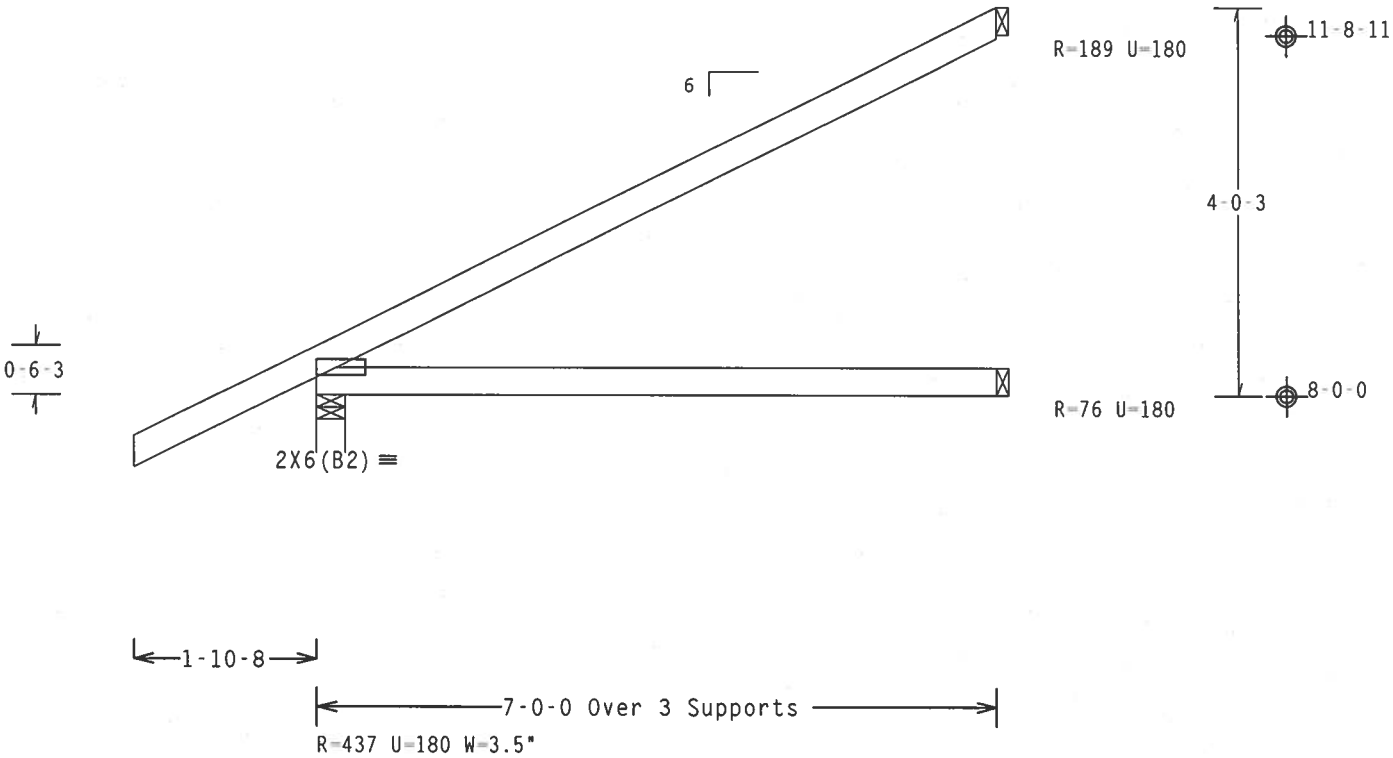

Design Crit: TPI-2002(STD)/FBC

PLT TYP. Wave\R Cq/RT=1.00(1.25)/10(0) 7.25.0502.23 QTY:32 FL/-/5/-/E/R/- Scale =.5"/Ft.

ALPINE
ITW Building Components Group, Inc.
Haines City, FL 33844
FL Certificate of Authorization # 567

WARNING TRUSSES REQUIRE EXTREME CARE IN FABRICATION, HANDLING, SHIPPING, INSTALLING AND BRACING. REFER TO BCSI (BUILDING COMPONENT SAFETY INFORMATION), PUBLISHED BY TPI (TRUSS PLATE INSTITUTE, 218 NORTH LEE STREET, SUITE 312, ALEXANDRIA, VA, 22314) AND WTCA (WOOD TRUSS COUNCIL OF AMERICA, 6300 ENTERPRISE LANE, MADISON, WI 53719) FOR SAFETY PRACTICES PRIOR TO PERFORMING THESE FUNCTIONS. UNLESS OTHERWISE INDICATED TOP CHORD SHALL HAVE PROPERLY ATTACHED STRUCTURAL PANELS AND BOTTOM CHORD SHALL HAVE A PROPERLY ATTACHED RIGID CEILING.

IMPORTANTFURNISH A COPY OF THIS DESIGN TO THE INSTALLATION CONTRACTOR. ITW BCG, INC. SHALL NOT BE RESPONSIBLE FOR ANY DEVIATION FROM THIS DESIGN; ANY FAILURE TO BUILD THE TRUSS IN CONFORMANCE WITH TPI; OR FABRICATING, HANDLING, SHIPPING, INSTALLING & BRACING OF TRUSSES.
DESIGN CONFORMS WITH APPLICABLE PROVISIONS OF NDS (NATIONAL DESIGN SPEC. BY AF&PA) AND TPI. ITW BCG CONNECTOR PLATES ARE MADE OF 20/18/16GA (W,H/SS/K) ASTM A653 GRADE 40/60 (W, K/H,SS) GALV. STEEL. APPLY PLATES TO EACH FACE OF TRUSS AND, UNLESS OTHERWISE LOCATED ON THIS DESIGN, POSITION PER DRAWINGS 160A-Z. ANY INSPECTION OF PLATES FOLLOWED BY (1) SHALL BE PER ANNEX A3 OF TPI1-2002 SEC.3. A SEAL ON THIS DRAWING INDICATES ACCEPTANCE OF PROFESSIONAL ENGINEERING RESPONSIBILITY SOLELY FOR THE TRUSS COMPONENT DESIGN SHOWN. THE SUITABILITY AND USE OF THIS COMPONENT FOR ANY BUILDING IS THE RESPONSIBILITY OF THE BUILDING DESIGNER PER ANSI/TPI 1 SEC. 2.

JAMES F. COLLINS JR. LICENSE No. 52212 STATE OF FLORIDA PROFESSIONAL ENGINEER
Apr 05,2007

TC LL	20.0 PSF	REF	R215-- 39470
TC DL	10.0 PSF	DATE	04/05/07
BC DL	10.0 PSF	DRW	HCUSR215 07095035
BC LL	0.0 PSF	HC-ENG	JK/AP *
TOT.LD.	40.0 PSF	SEQN-	143889
DUR.FAC.	1.25	FROM	CDM
SPACING	24.0"	JREF-	1T69215_Z02

THIS DWG PREPARED FROM COMPUTER INPUT (LOADS & DIMENSIONS) SUBMITTED BY TRUSS MFR.

Top chord 2x4 SP #2 N
Bot chord 2x4 SP #2 N
Webs 2x4 SP #2 N

Wind reactions based on MWFRS pressures.

Plates sized for a minimum of 3.00 sq.in./piece.

110 mph wind, 15.00 ft mean hgt, ASCE 7-02, CLOSED bldg, not located within 4.50 ft from roof edge, CAT II, EXP B, wind TC DL=5.0 psf, wind BC DL=5.0 psf.

Deflection meets L/360 live and L/240 total load.

The overall height of this truss excluding overhang is 4-0-3.

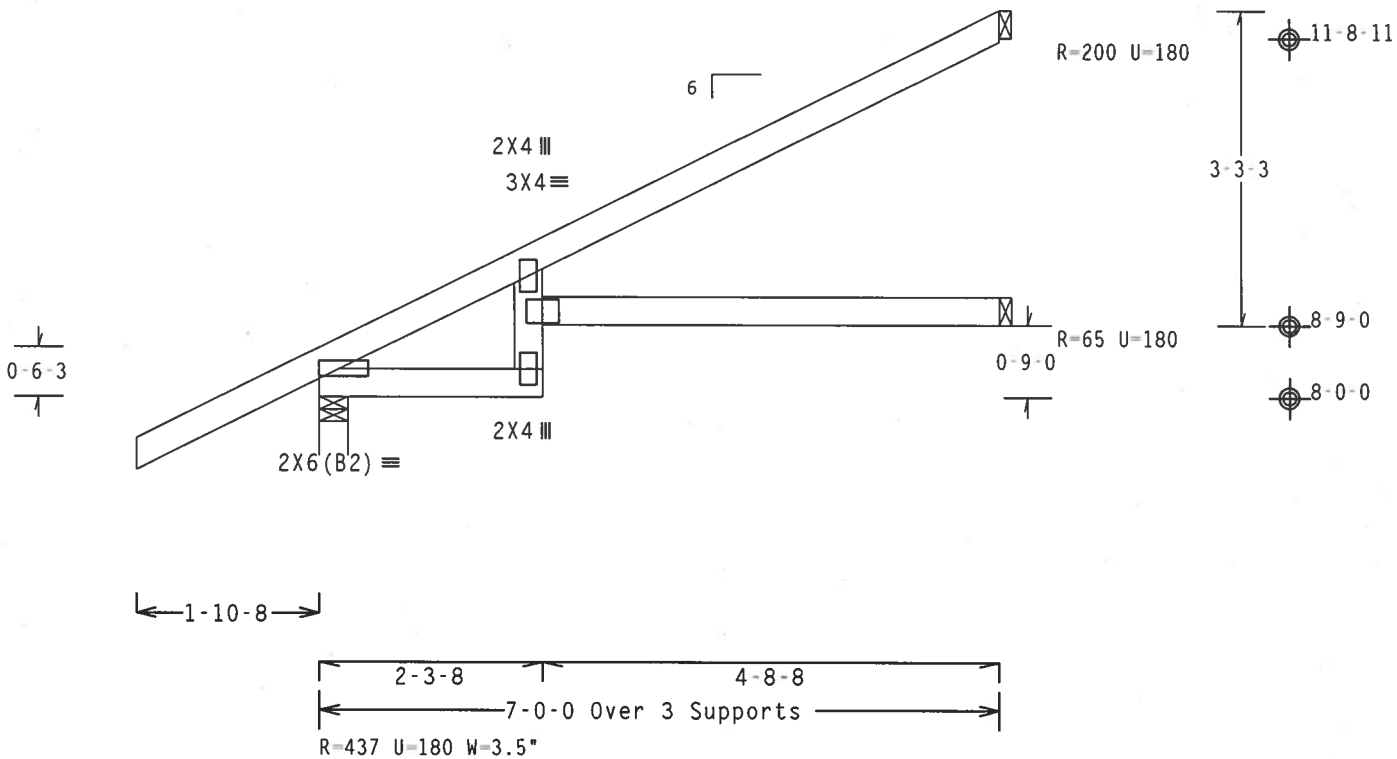

Design Crit: TPI-2002(STD)/FBC

PLT TYP. Wave\R Cq/RT=1.00(1.25)/10(0) 7.25.0503 QTY:4 FL/-/5/-/E/R/- Scale =.5"/Ft.

ALPINE
ITW Building Components Group, Inc.
Haines City, FL 33844
FL Certificate of Authorization # 567

WARNING TRUSSES REQUIRE EXTREME CARE IN FABRICATION, HANDLING, SHIPPING, INSTALLING AND BRACING. REFER TO BCSI (BUILDING COMPONENT SAFETY INFORMATION), PUBLISHED BY TPI (TRUSS PLATE INSTITUTE, 218 NORTH LEE STREET, SUITE 312, ALEXANDRIA, VA, 22314) AND WTCA (WOOD TRUSS COUNCIL OF AMERICA, 6300 ENTERPRISE LANE, MADISON, WI 53719) FOR SAFETY PRACTICES PRIOR TO PERFORMING THESE FUNCTIONS. UNLESS OTHERWISE INDICATED TOP CHORD SHALL HAVE PROPERLY ATTACHED STRUCTURAL PANELS AND BOTTOM CHORD SHALL HAVE A PROPERLY ATTACHED RIGID CEILING.

IMPORTANTFURNISH A COPY OF THIS DESIGN TO THE INSTALLATION CONTRACTOR. ITW BCG, INC. SHALL NOT BE RESPONSIBLE FOR ANY DEVIATION FROM THIS DESIGN; ANY FAILURE TO BUILD THE TRUSS IN CONFORMANCE WITH TPI; OR FABRICATING, HANDLING, SHIPPING, INSTALLING & BRACING OF TRUSSES.
DESIGN CONFORMS WITH APPLICABLE PROVISIONS OF NDS (NATIONAL DESIGN SPEC. BY AF&PA) AND TPI. ITW BCG CONNECTOR PLATES ARE MADE OF 20/18/16GA (W,H/SS/K) ASTM A653 GRADE 40/60 (W, K/H,SS) GALV. STEEL. APPLY PLATES TO EACH FACE OF TRUSS AND, UNLESS OTHERWISE LOCATED ON THIS DESIGN, POSITION PER DRAWINGS 160A-Z. ANY INSPECTION OF PLATES FOLLOWED BY (1) SHALL BE PER ANNEX A3 OF TPI1-2002 SEC.3. A SEAL ON THIS DRAWING INDICATES ACCEPTANCE OF PROFESSIONAL ENGINEERING RESPONSIBILITY SOLELY FOR THE TRUSS COMPONENT DESIGN SHOWN. THE SUITABILITY AND USE OF THIS COMPONENT FOR ANY BUILDING IS THE RESPONSIBILITY OF THE BUILDING DESIGNER PER ANSI/TPI 1 SEC. 2.

JAMES F. COLLINS, JR. LICENSED No. 52372 STATE OF FLORIDA PROFESSIONAL ENGINEER
Apr 05 07

TC LL	20.0 PSF	REF	R215-- 39471
TC DL	10.0 PSF	DATE	04/05/07
BC DL	10.0 PSF	DRW	HCUSR215 07095036
BC LL	0.0 PSF	HC-ENG	JK/AP *
TOT.LD.	40.0 PSF	SEQN-	143898
DUR.FAC.	1.25	FROM	CDM
SPACING	24.0"	JREF-	1T69215_Z02

Top chord 2x4 SP #2 N
Bot chord 2x4 SP #2 N
Webs 2x4 SP #2 N

Wind reactions based on MWFRS pressures.

Deflection meets L/360 live and L/240 total load.

The overall height of this truss excluding overhang is 3-11-15.

* Toenail allowed based on average reaction.

110 mph wind, 15.00 ft mean hgt, ASCE 7-02, CLOSED bldg, Located anywhere in roof, CAT II, EXP B, wind TC DL=5.0 psf, wind BC DL=5.0 psf. Iw=1.00 GCpi(+/-)=0.18

Hipjack supports 7-0-0 setback jacks with no webs.

Plates sized for a minimum of 3.00 sq.in./piece.

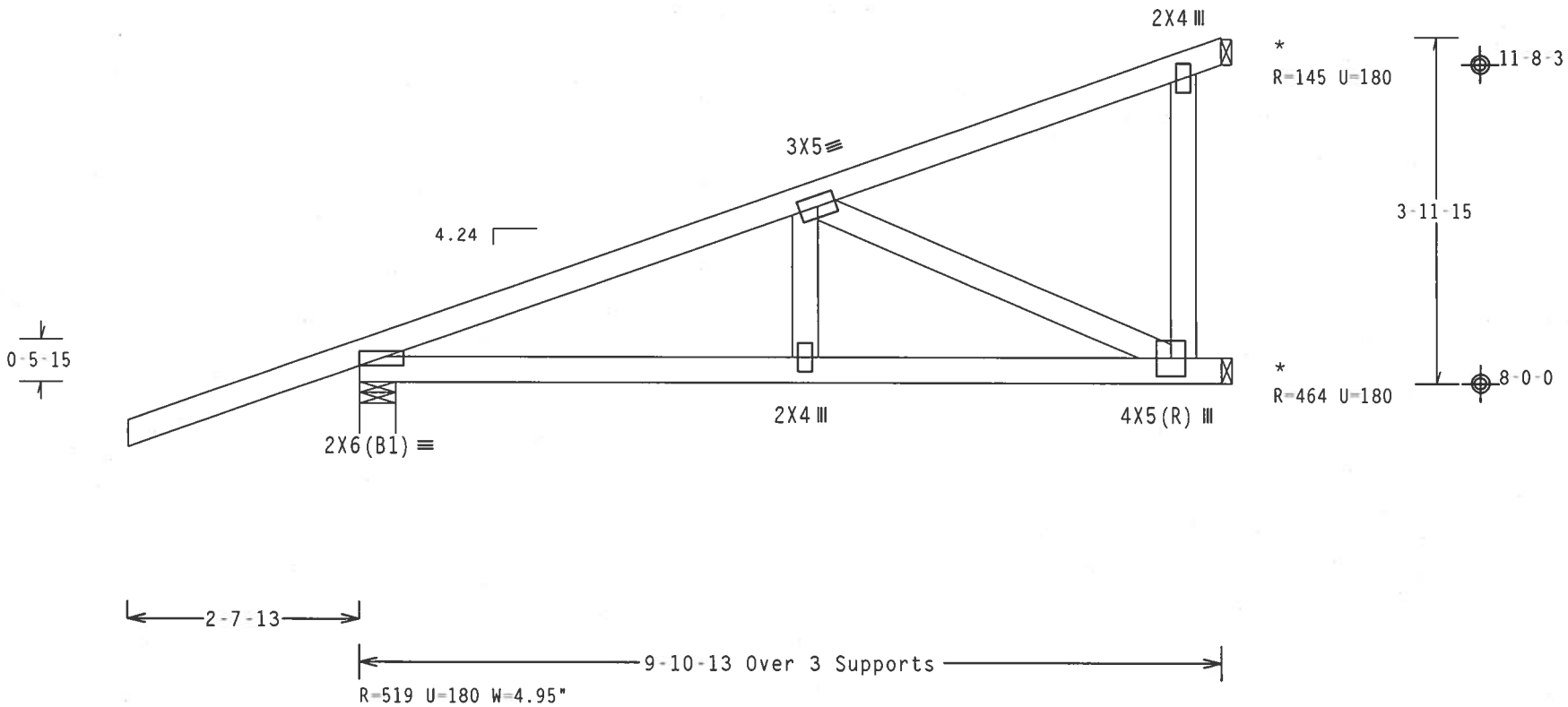

Design Crit: TPI-2002(STD)/FBC

PLT TYP. Wave\R Cq/RT=1.00(1.25)/10(0) 7.25.0502.23 QTY:4 FL/-/5/-/E/R/- Scale =.5"/Ft.

ALPINE

ITW Building Components Group, Inc.
Haines City, FL 33844
FL Certificate of Authorization # 567

WARNING TRUSSES REQUIRE EXTREME CARE IN FABRICATION, HANDLING, SHIPPING, INSTALLING AND BRACING. REFER TO BCSI (BUILDING COMPONENT SAFETY INFORMATION), PUBLISHED BY TPI (TRUSS PLATE INSTITUTE, 218 NORTH LEE STREET, SUITE 312, ALEXANDRIA, VA, 22314) AND WTCA (WOOD TRUSS COUNCIL OF AMERICA, 6300 ENTERPRISE LANE, MADISON, WI 53719) FOR SAFETY PRACTICES PRIOR TO PERFORMING THESE FUNCTIONS. UNLESS OTHERWISE INDICATED TOP CHORD SHALL HAVE PROPERLY ATTACHED STRUCTURAL PANELS AND BOTTOM CHORD SHALL HAVE A PROPERLY ATTACHED RIGID CEILING.

IMPORTANTFURNISH A COPY OF THIS DESIGN TO THE INSTALLATION CONTRACTOR. ITW BCG, INC. SHALL NOT BE RESPONSIBLE FOR ANY DEVIATION FROM THIS DESIGN; ANY FAILURE TO BUILD THE TRUSS IN CONFORMANCE WITH TPI; OR FABRICATING, HANDLING, SHIPPING, INSTALLING & BRACING OF TRUSSES.
DESIGN CONFORMS WITH APPLICABLE PROVISIONS OF NDS (NATIONAL DESIGN SPEC. BY AF&PA) AND TPI. ITW BCG CONNECTOR PLATES ARE MADE OF 20/18/16GA (W,H/SS/K) ASTM A653 GRADE 40/60 (W, K/H,SS) GALV. STEEL. APPLY PLATES TO EACH FACE OF TRUSS AND, UNLESS OTHERWISE LOCATED ON THIS DESIGN, POSITION PER DRAWINGS 160A-Z. ANY INSPECTION OF PLATES FOLLOWED BY (1) SHALL BE PER ANNEX A3 OF TPI1-2002 SEC.3. A SEAL ON THIS DRAWING INDICATES ACCEPTANCE OF PROFESSIONAL ENGINEERING RESPONSIBILITY SOLELY FOR THE TRUSS COMPONENT DESIGN SHOWN. THE SUITABILITY AND USE OF THIS COMPONENT FOR ANY BUILDING IS THE RESPONSIBILITY OF THE BUILDING DESIGNER PER ANSI/TPI 1 SEC. 2.

JAMES F. COLLINS JR. LICENSE No. 52212 STATE OF FLORIDA PROFESSIONAL ENGINEER
Apr 05

TC LL	20.0 PSF	REF	R215-- 39472
TC DL	10.0 PSF	DATE	04/05/07
BC DL	10.0 PSF	DRW	HCUSR215 07095008
BC LL	0.0 PSF	HC-ENG	EC/WHK
TOT.LD.	40.0 PSF	SEQN-	143865
DUR.FAC.	1.25	FROM	CDM
SPACING	24.0"	JREF-	1T69215_Z02

(4477-/Russell Residence /EDGELY CONSTRUCTION -- LAKE CITY, FL - JH10A)

Top chord 2x4 SP #2 N
Bot chord 2x4 SP #2 N
Webs 2x4 SP #2 N :W1 2x8 SP #2 N:

Wind reactions based on MWFRS pressures.

Deflection meets L/360 live and L/240 total load.

The overall height of this truss excluding overhang is 3-11-15.

* Toenail allowed based on average reaction.

110 mph wind, 15.00 ft mean hgt, ASCE 7-02, CLOSED bldg, Located anywhere in roof, CAT II, EXP B, wind TC DL=5.0 psf, wind BC DL=5.0 psf. Iw=1.00 GCpi(+/-)=0.18

Hipjack supports 7-0-0 setback jacks with no webs.

Plates sized for a minimum of 3.00 sq.in./piece.

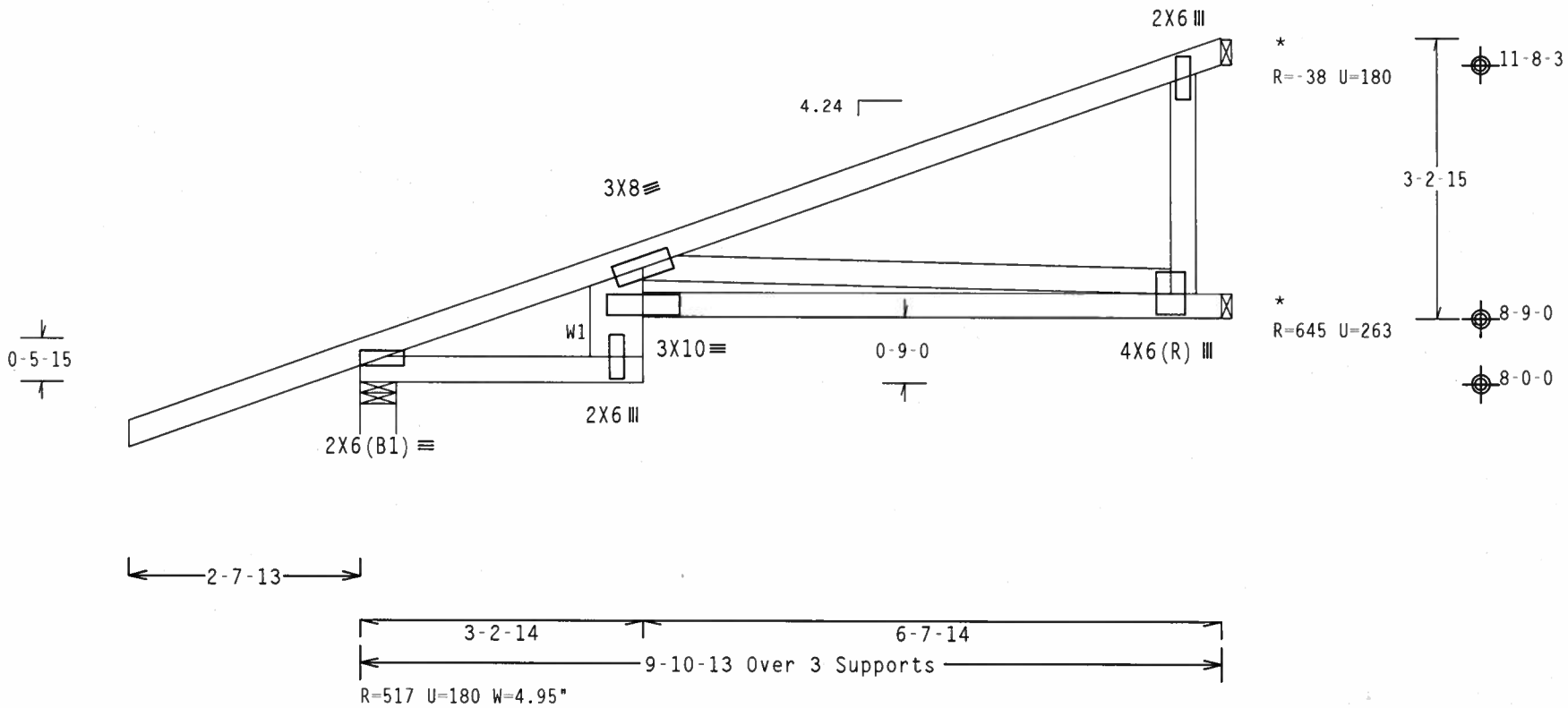

Design Crit: TPI-2002(STD)/FBC
Cq/RT=1.00(1.25)/10(0) 7.25.0502

PLT TYP. Wave\R QTY:1 FL/-/5/-/E/R/- Scale =.5"/Ft.

ALPINE
ITW Building Components Group, Inc.
Haines City, FL 33844
FL Certificate of Authorization # 567

WARNING TRUSSES REQUIRE EXTREME CARE IN FABRICATION, HANDLING, SHIPPING, INSTALLING AND BRACING. REFER TO BCSI (BUILDING COMPONENT SAFETY INFORMATION), PUBLISHED BY TPI (TRUSS PLATE INSTITUTE, 218 NORTH LEE STREET, SUITE 312, ALEXANDRIA, VA, 22314) AND WTCA (WOOD TRUSS COUNCIL OF AMERICA, 6300 ENTERPRISE LANE, MADISON, WI 53719) FOR SAFETY PRACTICES PRIOR TO PERFORMING THESE FUNCTIONS. UNLESS OTHERWISE INDICATED TOP CHORD SHALL HAVE PROPERLY ATTACHED STRUCTURAL PANELS AND BOTTOM CHORD SHALL HAVE A PROPERLY ATTACHED RIGID CEILING.

IMPORTANTFURNISH A COPY OF THIS DESIGN TO THE INSTALLATION CONTRACTOR. ITW BCG, INC. SHALL NOT BE RESPONSIBLE FOR ANY DEVIATION FROM THIS DESIGN; ANY FAILURE TO BUILD THE TRUSS IN COMFORMANCE WITH TPI; OR FABRICATING, HANDLING, SHIPPING, INSTALLING & BRACING OF TRUSSES.
DESIGN CONFORMS WITH APPLICABLE PROVISIONS OF NDS (NATIONAL DESIGN SPEC. BY AF&PA) AND TPI. ITW BCG CONNECTOR PLATES ARE MADE OF 20/18/16GA (W.H/SS/K) ASTM A653 GRADE 40/60 (W. K/H.SS) GALV. STEEL. APPLY PLATES TO EACH FACE OF TRUSS AND, UNLESS OTHERWISE LOCATED ON THIS DESIGN, POSITION PER DRAWINGS 160A-Z. ANY INSPECTION OF PLATES FOLLOWED BY (1) SHALL BE PER ANNEX A3 OF TPI1-2002 SEC.3. A SEAL ON THIS DRAWING INDICATES ACCEPTANCE OF PROFESSIONAL ENGINEERING RESPONSIBILITY SOLELY FOR THE TRUSS COMPONENT DESIGN SHOWN. THE SUITABILITY AND USE OF THIS COMPONENT FOR ANY BUILDING IS THE RESPONSIBILITY OF THE BUILDING DESIGNER PER ANSI/TPI 1 SEC. 2.

JAMES F. COLLINS JR. LICENSED No 52212 STATE OF FLORIDA PROFESSIONAL ENGINEER
Apr 05,2007

TC LL	20.0 PSF	REF	R215-- 39473
TC DL	10.0 PSF	DATE	04/05/07
BC DL	10.0 PSF	DRW	HCUSR215 07095009
BC LL	0.0 PSF	HC-ENG	EC/WHK
TOT.LD.	40.0 PSF	SEQN-	143875
DUR.FAC.	1.25	FROM	CDM
SPACING	24.0"	JREF-	1T69215_Z02

BEARING BLOCK NAIL SPACING DETAIL

MINIMUM SPACING FOR SINGLE BEARING BLOCK IS SHOWN. DOUBLE NAIL SPACINGS AND STAGGER NAILING FOR TWO BLOCKS. GREATER SPACING MAY BE REQUIRED TO AVOID SPLITTING.

A – EDGE DISTANCE AND SPACING BETWEEN STAGGERED ROWS OF NAILS (6 NAIL DIAMETERS)
B – SPACING OF NAILS IN A ROW (12 NAIL DIAMETERS)
C – END DISTANCE (15 NAIL DIAMETERS)

IF NAIL HOLES ARE PREBORED, SOME SPACING MAY BE REDUCED BY THE AMOUNTS GIVEN BELOW:
- • SPACING MAY BE REDUCED BY 50%
- •• SPACING MAY BE REDUCED BY 33%

BEARING BLOCK TO BE SAME SIZE AND SPECIES AS BOTTOM CHORD. BLOCKS MAY BE ANY GRADE WITHIN THE SPECIES, PROVIDED THE COMPRESSION PERPENDICULAR TO GRAIN VALUE (Fc-perp) IS AT LEAST THAT OF THE CHORD.

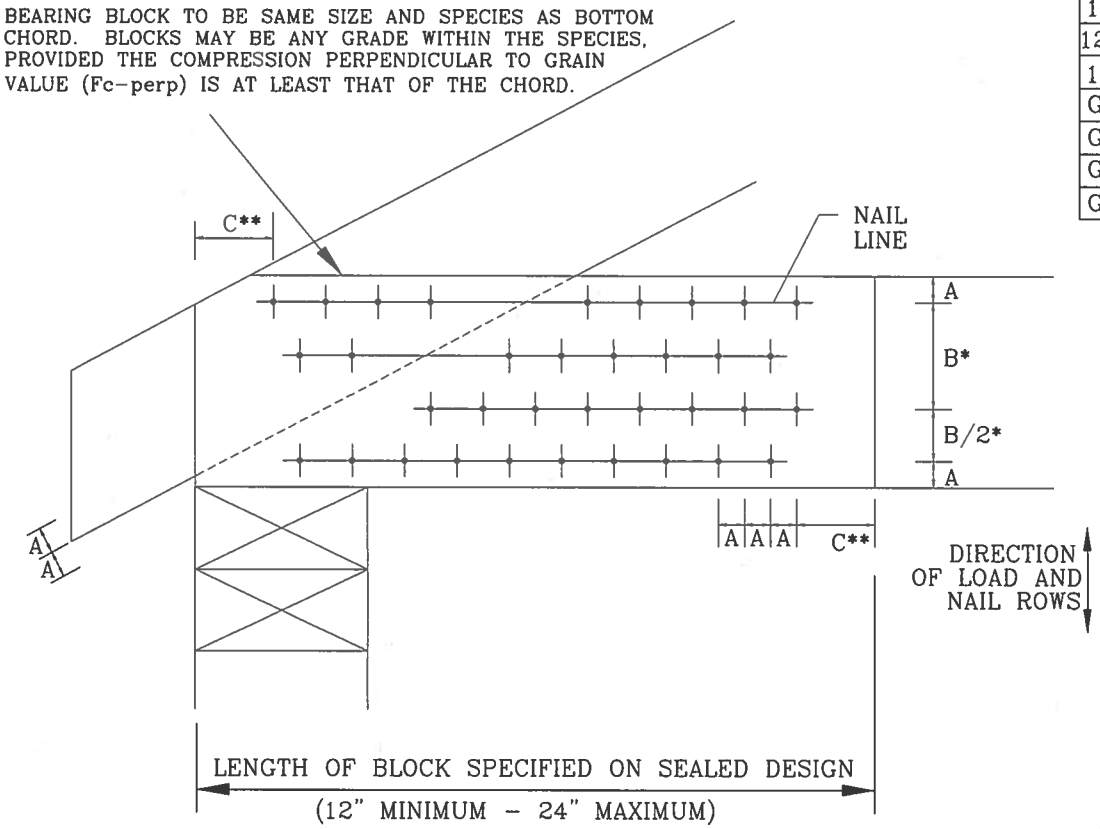

MAXIMUM NUMBER OF NAIL LINES PARALLEL TO GRAIN

NAIL TYPE	CHORD SIZE 2X4	2X6	2X8	2X10	2X12
8d BOX (0.113"X 2.5",MIN)	3	6	9	12	15
10d BOX (0.128"X 3.",MIN)	3	5	7	10	12
12d BOX (0.128"X 3.25",MIN)	3	5	7	10	12
16d BOX (0.135"X 3.5",MIN)	3	5	7	10	12
20d BOX (0.148"X 4.",MIN)	2	4	5	6	8
8d COMMON (0.131"X 2.5",MIN)	3	5	7	10	12
10d COMMON (0.148"X 3.",MIN)	2	4	6	8	10
12d COMMON (0.148"X 3.25",MIN)	2	4	6	8	10
16d COMMON (0.162"X 3.5",MIN)	2	4	6	8	10
GUN (0.120"X 2.5",MIN)	3	6	8	11	14
GUN (0.131"X 2.5",MIN)	3	5	7	10	12
GUN (0.120"X 3.",MIN)	3	6	8	11	14
GUN (0.131"X 3.",MIN)	3	5	7	10	12

MINIMUM NAIL SPACING DISTANCES

NAIL TYPE	DISTANCES A	B*	C**
8d BOX (0.113"X 2.5",MIN)	3/4"	1 3/8"	1 3/4"
10d BOX (0.128"X 3.",MIN)	7/8"	1 5/8"	2"
12d BOX (0.128"X 3.25",MIN)	7/8"	1 5/8"	2"
16d BOX (0.135"X 3.5",MIN)	7/8"	1 5/8"	2 1/8"
20d BOX (0.148"X 4.",MIN)	1"	1 7/8"	2 1/4"
8d COMMON (0.131"X 2.5",MIN)	7/8"	1 5/8"	2"
10d COMMON (0.148"X 3.",MIN)	1"	1 7/8"	2 1/4"
12d COMMON (0.148"X 3.25",MIN)	1"	1 7/8"	2 1/4"
16d COMMON (0.162"X 3.5",MIN)	1'	2"	2 1/2"
GUN (0.120"X 2.5",MIN)	3/4"	1 1/2"	1 7/8"
GUN (0.131"X 2.5",MIN)	7/8"	1 5/8"	2"
GUN (0.120"X 3.",MIN)	3/4"	1 1/2"	1 7/8"
GUN (0.131"X 3.",MIN)	7/8"	1 5/8"	2"

THIS DRAWING REPLACES DRAWING B139 AND CNBRGBLK0699

ALPINE
ITW BUILDING COMPONENTS GROUP, INC.
POMPANO BEACH, FLORIDA

WARNING TRUSSES REQUIRE EXTREME CARE IN FABRICATING, HANDLING, SHIPPING, INSTALLING AND BRACING. REFER TO BCSI (BUILDING COMPONENT SAFETY INFORMATION), PUBLISHED BY TPI (TRUSS PLATE INSTITUTE, 218 NORTH LEE STR., SUITE 312 ALEXANDRIA, VA. 22314) AND WTCA (WOOD TRUSS COUNCIL OF AMERICA, 6300 ENTERPRISE LN, MADISON, WI 53719) FOR SAFETY PRACTICES PRIOR TO PERFORMING THESE FUNCTIONS. UNLESS OTHERWISE INDICATED, TOP CHORD SHALL HAVE PROPERLY ATTACHED STRUCTURAL PANELS AND BOTTOM CHORD SHALL HAVE A PROPERLY ATTACHED RIGID CEILING.

IMPORTANT FURNISH COPY OF THIS DESIGN TO INSTALLATION CONTRACTOR. ITW BCG, INC., SHALL NOT BE RESPONSIBLE FOR ANY DEVIATION FROM THIS DESIGN; ANY FAILURE TO BUILD THE TRUSS IN CONFORMANCE WITH TPI; OR FABRICATING, HANDLING, SHIPPING, INSTALLING & BRACING OF TRUSSES. DESIGN CONFORMS WITH APPLICABLE PROVISIONS OF NDS (NATIONAL DESIGN SPEC, BY AF&PA) AND TPI. ITW, BCG CONNECTOR PLATES ARE MADE OF 20/18/16GA (W,H/SS/K) ASTM A653 GRADE 40/60 (W,K/H,SS) GALV. STEEL. APPLY PLATES TO EACH FACE OF TRUSS AND, UNLESS OTHERWISE LOCATED ON THIS DESIGN, POSITION PER DRAWINGS 160A-Z. ANY INSPECTION OF PLATES FOLLOWED BY (I) SHALL BE PER ANNEX A3 OF TPI 1-2002 SEC. 3. A SEAL ON THIS DRAWING INDICATES ACCEPTANCE OF PROFESSIONAL ENGINEERING RESPONSIBILITY SOLELY FOR THE TRUSS COMPONENT DESIGN SHOWN. THE SUITABILITY AND USE OF THIS COMPONENT FOR ANY BUILDING IS THE RESPONSIBILITY OF THE BUILDING DESIGNER, PER ANSI/TPI 1 SEC. 2.

JAMES F. COLLINS, JR. LICENSE No. 52212 STATE OF FLORIDA PROFESSIONAL ENGINEER
Apr 05 '07

REF	BEARING BLOCK
DATE	2/23/07
DRWG	CNBRGBLK0207
-ENG	SJP/KAR

CLB WEB BRACE SUBSTITUTION

THIS DETAIL IS TO BE USED WHEN CONTINUOUS LATERAL BRACING (CLB) IS SPECIFIED ON AN ALPINE TRUSS DESIGN BUT AN ALTERNATIVE WEB BRACING METHOD IS DESIRED.

NOTES:

THIS DETAIL IS ONLY APPLICABLE FOR CHANGING THE SPECIFIED CLB SHOWN ON SINGLE PLY SEALED DESIGNS TO T-BRACING OR SCAB BRACING.

ALTERNATIVE BRACING SPECIFIED IN CHART BELOW MAY BE CONSERVATIVE. FOR MINIMUM ALTERNATIVE BRACING, RE-RUN DESIGN WITH APPROPRIATE BRACING.

WEB MEMBER SIZE	SPECIFIED CLB BRACING	ALTERNATIVE BRACING T OR L-BRACE	ALTERNATIVE BRACING SCAB BRACE
2X3 OR 2X4	1 ROW	2X4	1-2X4
2X3 OR 2X4	2 ROWS	2X6	2-2X4
2X6	1 ROW	2X4	1-2X6
2X6	2 ROWS	2X6	2-2X4(*)
2X8	1 ROW	2X6	1-2X8
2X8	2 ROWS	2X6	2-2X6(*)

T-BRACE, L-BRACE AND SCAB BRACE TO BE SAME SPECIES AND GRADE OR BETTER THAN WEB MEMBER UNLESS SPECIFIED OTHERWISE ON ENGINEER'S SEALED DESIGN.

(*) CENTER SCAB ON WIDE FACE OF WEB. APPLY (1) SCAB TO EACH FACE OF WEB.

T-BRACING OR L-BRACING:

APPLY TO EITHER SIDE OF WEB NARROW FACE.
ATTACH WITH 10d BOX OR GUN
(0.128"x 3.",MIN) NAILS.
AT 6" O.C. BRACE IS A
MINIMUM 80% OF WEB
MEMBER LENGTH

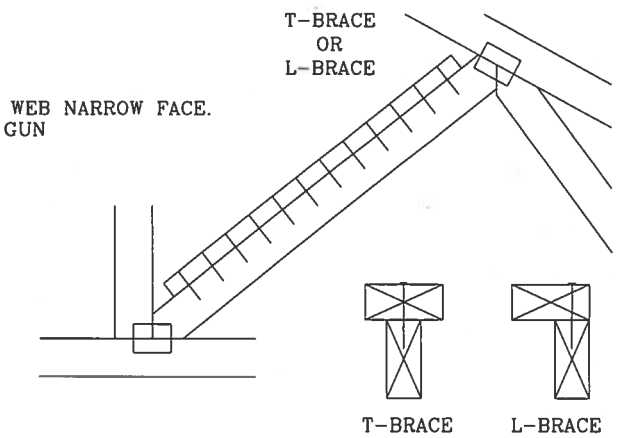

SCAB BRACING:

APPLY SCAB(S) TO WIDE FACE OF WEB.
NO MORE THAN (1) SCAB PER FACE.
ATTACH WITH 10d BOX OR GUN
(0.128"x 3.",MIN) NAILS.
AT 6" O.C. BRACE IS A MINIMUM
80% OF WEB MEMBER LENGTH

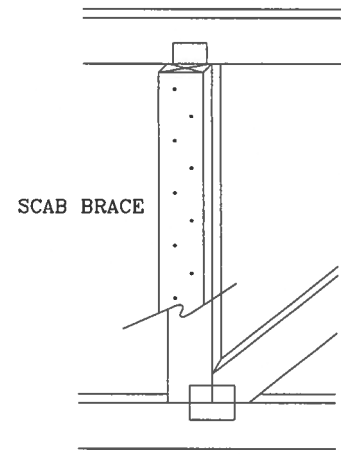

THIS DRAWING REPLACES DRAWING 579,640

ALPINE

ITW BUILDING COMPONENTS GROUP, INC.
POMPANO BEACH, FLORIDA

WARNING TRUSSES REQUIRE EXTREME CARE IN FABRICATING, HANDLING, SHIPPING, INSTALLING AND BRACING. REFER TO BCSI (BUILDING COMPONENT SAFETY INFORMATION), PUBLISHED BY TPI (TRUSS PLATE INSTITUTE, 218 NORTH LEE STR., SUITE 312, ALEXANDRIA, VA. 22314) AND WTCA (WOOD TRUSS COUNCIL OF AMERICA, 6300 ENTERPRISE LN, MADISON, WI 53719) FOR SAFETY PRACTICES PRIOR TO PERFORMING THESE FUNCTIONS. UNLESS OTHERWISE INDICATED, TOP CHORD SHALL HAVE PROPERLY ATTACHED STRUCTURAL PANELS AND BOTTOM CHORD SHALL HAVE A PROPERLY ATTACHED RIGID CEILING.

IMPORTANT FURNISH COPY OF THIS DESIGN TO INSTALLATION CONTRACTOR. ITW BCG, INC., SHALL NOT BE RESPONSIBLE FOR ANY DEVIATION FROM THIS DESIGN; ANY FAILURE TO BUILD THE TRUSS IN CONFORMANCE WITH TPI; OR FABRICATING, HANDLING, SHIPPING, INSTALLING & BRACING OF TRUSSES. DESIGN CONFORMS WITH APPLICABLE PROVISIONS OF NDS (NATIONAL DESIGN SPEC, BY AF&PA) AND TPI. ITW, BCG CONNECTOR PLATES ARE MADE OF 20/18/16GA (W,H/SS/K) ASTM A653 GRADE 40/60 (W,X/H,S) GALV. STEEL. APPLY PLATES TO EACH FACE OF TRUSS AND, UNLESS OTHERWISE LOCATED ON THIS DESIGN, POSITION PER DRAWINGS 160A-Z. ANY INSPECTION OF PLATES FOLLOWED BY (I) SHALL BE PER ANNEX A3 OF TPI 1-2002 SEC. 3. A SEAL ON THIS DRAWING INDICATES ACCEPTANCE OF PROFESSIONAL ENGINEERING RESPONSIBILITY SOLELY FOR THE TRUSS COMPONENT DESIGN SHOWN. THE SUITABILITY AND USE OF THIS COMPONENT FOR ANY BUILDING IS THE RESPONSIBILITY OF THE BUILDING DESIGNER, PER ANSI/TPI 1 SEC. 2.

JAMES A. COLLINS, JR.
LICENSE
No. 52212
Apr 05 '07
STATE OF
FLORIDA
PROFESSIONAL ENGINEER

TC LL	PSF	REF	CLB SUBST.
TC DL	PSF	DATE	2/23/07
BC DL	PSF	DRWG	BRCLBSUB0207
BC LL	PSF	-ENG	MLH/KAR
TOT. LD.	PSF		
DUR. FAC.			
SPACING			

TOP CHORD FILLER DETAIL

+ 2X4 CONTINUOUS LATERAL BRACING AT 24" O.C. MAXIMUM SPACING. ATTACH TO EACH TOP CHORD WITH (2) 16d COMMON (0.162"X 3.5",MIN) NAILS. BRACING MATERIAL TO BE SUPPLIED AND ATTACHED AT BOTH ENDS TO A SUITABLE SUPPORT BY ERECTION CONTRACTOR.

++ 2X4 SO. PINE #2 N OR SPF #1/#2 FILLER TOP CHORD.

+++ 2X4 SO. PINE #3 OR SPF #1/#2 VERTICAL WEBS SPACED 48" OC MAXIMUM.

* 8/12 MAXIMUM PITCH.

** 2X8.25 PIGGYBACK SPECIAL PLATE. SEE DRAWING PIGBACKB0699 FOR PIGGYBACK SPECIAL PLATE INFORMATION.

*** 6'0" MAXIMUM HEIGHT.

† W2X4 OR 3X6 TRULOX.

†† REFER TO ENGINEER'S SEALED DESIGN REFERENCING THIS DETAIL FOR LUMBER, PLATES, AND OTHER INFORMATION NOT SHOWN.

0.120"X 1.375" NAILS REQUIRED FOR TRULOX PLATE ATTACHMENT. NAILS SPECIFIED IN CIRCLES MUST BE APPLIED TO EACH FACE OF EACH TRUSS PLY. SEE DWG. 160TL FOR NAILING AND TRULOX PLATE REQUIREMENTS.

OFFSET FILLER DETAIL

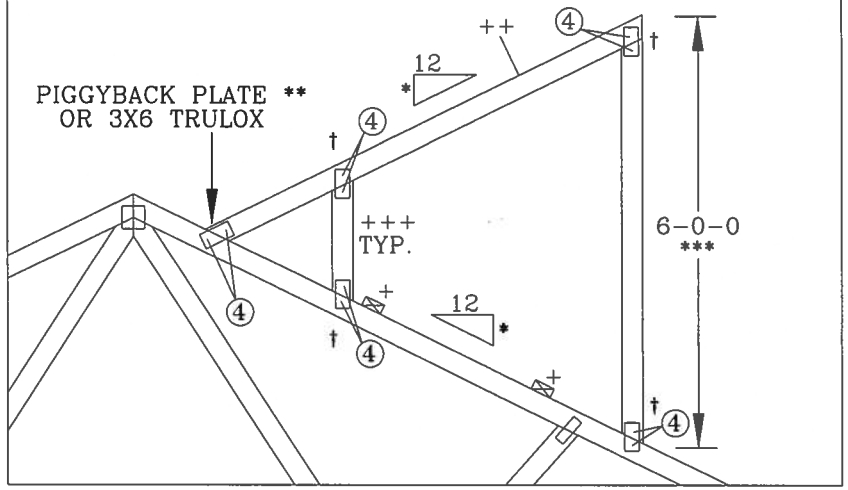

EXTENDED TOP CHORD FILLER DETAIL

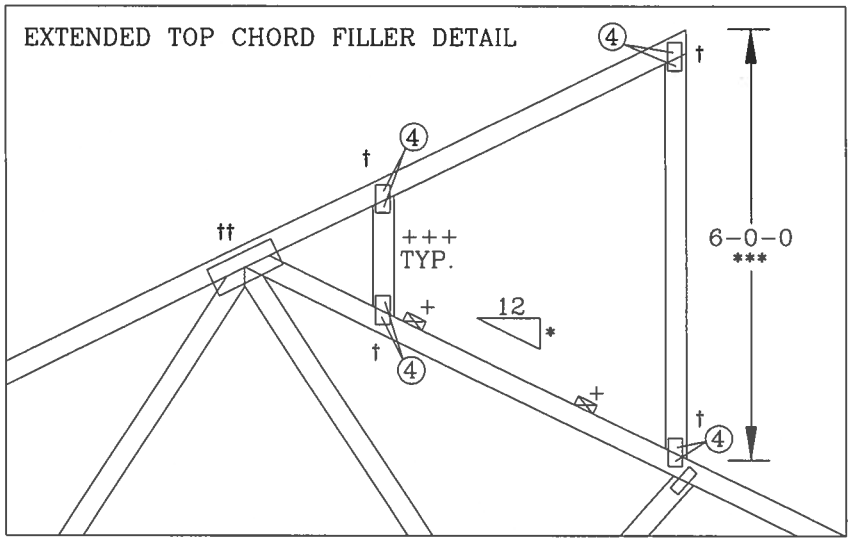

TOP CHORD FILLER DETAIL

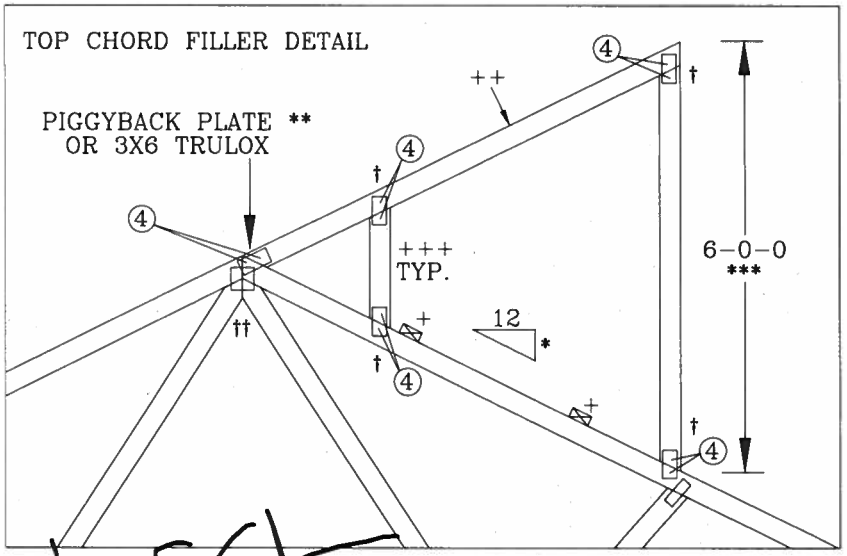

THIS DRAWING REPLACES DRAWING 884,080

ALPINE

ITW BUILDING COMPONENTS GROUP, INC.
POMPANO BEACH, FLORIDA

WARNING TRUSSES REQUIRE EXTREME CARE IN FABRICATING, HANDLING, SHIPPING, INSTALLING AND BRACING. REFER TO BCSI (BUILDING COMPONENT SAFETY INFORMATION), PUBLISHED BY TPI (TRUSS PLATE INSTITUTE, 218 NORTH LEE STR., SUITE 312, ALEXANDRIA, VA. 22314) AND WTCA (WOOD TRUSS COUNCIL OF AMERICA, 6300 ENTERPRISE LN, MADISON, WI 53719) FOR SAFETY PRACTICES PRIOR TO PERFORMING THESE FUNCTIONS. UNLESS OTHERWISE INDICATED, TOP CHORD SHALL HAVE PROPERLY ATTACHED STRUCTURAL PANELS AND BOTTOM CHORD SHALL HAVE A PROPERLY ATTACHED RIGID CEILING.

IMPORTANT FURNISH COPY OF THIS DESIGN TO INSTALLATION CONTRACTOR. ITW BCG, INC., SHALL NOT BE RESPONSIBLE FOR ANY DEVIATION FROM THIS DESIGN; ANY FAILURE TO BUILD THE TRUSS IN CONFORMANCE WITH TPI; OR FABRICATING, HANDLING, SHIPPING, INSTALLING & BRACING OF TRUSSES. DESIGN CONFORMS WITH APPLICABLE PROVISIONS OF NDS (NATIONAL DESIGN SPEC, BY AF&PA) AND TPI. ITW, BCG CONNECTOR PLATES ARE MADE OF 20/18/16GA (W,H/SS/K) ASTM A653 GRADE 40/60 (W,K/H,SS) GALV. STEEL. APPLY PLATES TO EACH FACE OF TRUSS AND, UNLESS OTHERWISE LOCATED ON THIS DESIGN, POSITION PER DRAWINGS 160A-Z. ANY INSPECTION OF PLATES FOLLOWED BY (I) SHALL BE PER ANNEX A3 OF TPI 1-2002 SEC. 3. A SEAL ON THIS DRAWING INDICATES ACCEPTANCE OF PROFESSIONAL ENGINEERING RESPONSIBILITY SOLELY FOR THE TRUSS COMPONENT DESIGN SHOWN. THE SUITABILITY AND USE OF THIS COMPONENT FOR ANY BUILDING IS THE RESPONSIBILITY OF THE BUILDING DESIGNER, PER ANSI/TPI 1 SEC. 2.

Apr 10

JAMES P. COLLINS, JR.
LICENSE
No. 52212
STATE OF FLORIDA
PROFESSIONAL ENGINEER

TC LL	MAX 30 PSF	REF	TC-FILLER
TC DL	MAX 15 PSF	DATE	2/23/07
BC DL	MAX 10 PSF	DRWG	TCFILLER0207
BC LL	0 PSF	-ENG	SJP/KAR
TOT. LD.	MAX 55 PSF		
DUR. FAC.	1.15 OR 1.33		
SPACING	24.0"		

BOTTOM CHORD FILLER DETAIL

* OPTIONAL INTERIOR OR CANTILEVER BEARING. MINIMUM PLATE SIZES (1X3 WAVE) MAY BE USED IF BEARING IS OMITTED. WEDGE OR VERTICAL MEMBER MUST COINCIDE WITH BEARING LOCATION.

0.120" X 1.375", NAILS, REQUIRED FOR TRULOX PLATE ATTACHMENT. NAILS SPECIFIED IN CIRCLES MUST BE APPLIED TO EACH FACE OF THE TRUSS. SEE DWG. 160TL FOR NAILING AND TRULOX PLATE REQUIREMENTS.

\+ 3X4 WAVE OR 4X8 TRULOX

++ 2X4 WAVE OR 3X6 TRULOX

REFER TO ENGINEER'S SEALED DESIGN REFERENCING THIS DETAIL FOR LUMBER, PLATES, AND OTHER INFORMATION NOT SHOWN.

ALL TRULOX PLATES SHOWN ARE MINIMUMS. LARGER PLATES MAY BE REQUIRED TO ACCOMODATE REQUIRED NAILS (**)

FILLER BOTTOM CHORD OR WEDGE SPECIES	MAXIMUM REACTION		MINIMUM BEARING AREA	** REQUIRED NAILS PER FACE WITH TRULOX PLATES				
	DOWNWARD	UPLIFT		1.00 D.O.L.	1.15 D.O.L.	1.25 D.O.L.	1.33 D.O.L.	1.60 D.O.L.
DOUGLAS FIR-LARCH	3281#	1656#	1.5" X 3.5"	12	11	10	9	8
HEM-FIR	2126#	1095#	1.5" X 3.5"	9	8	7	7	6
SPRUCE-PINE-FIR	2231#	1192#	1.5" X 3.5"	10	9	8	8	6
SOUTHERN PINE DENSE	3465#	1791#	1.5" X 3.5"	12	11	10	9	8
SOUTHERN PINE	2966#	1492#	1.5" X 3.5"	10	9	8	8	7
SOUTHERN PINE NON-DENSE	2520#	1343#	1.5" X 3.5"	9	8	7	7	6

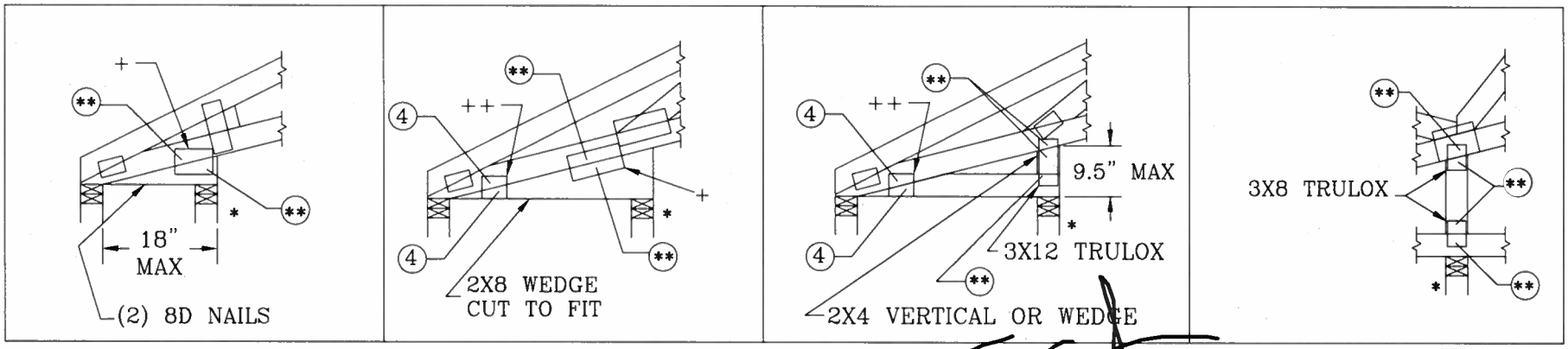

THIS DRAWING REPLACES DRAWINGS A115 A115/R & 884,132

ALPINE

ITW BUILDING COMPONENTS GROUP, INC.
POMPANO BEACH, FLORIDA

WARNING TRUSSES REQUIRE EXTREME CARE IN FABRICATING, HANDLING, SHIPPING, INSTALLING AND BRACING. REFER TO BCSI (BUILDING COMPONENT SAFETY INFORMATION), PUBLISHED BY TPI (TRUSS PLATE INSTITUTE, 218 NORTH LEE STR., SUITE 312, ALEXANDRIA, VA. 22314) AND WTCA (WOOD TRUSS COUNCIL OF AMERICA, 6300 ENTERPRISE LN, MADISON, WI 53719) FOR SAFETY PRACTICES PRIOR TO PERFORMING THESE FUNCTIONS. UNLESS OTHERWISE INDICATED, TOP CHORD SHALL HAVE PROPERLY ATTACHED STRUCTURAL PANELS AND BOTTOM CHORD SHALL HAVE A PROPERLY ATTACHED RIGID CEILING.

IMPORTANT FURNISH COPY OF THIS DESIGN TO INSTALLATION CONTRACTOR. ITW BCG, INC. SHALL NOT BE RESPONSIBLE FOR ANY DEVIATION FROM THIS DESIGN; ANY FAILURE TO BUILD THE TRUSS IN CONFORMANCE WITH TPI; OR FABRICATING, HANDLING, SHIPPING, INSTALLING & BRACING OF TRUSSES DESIGN CONFORMS WITH APPLICABLE PROVISIONS OF NDS (NATIONAL DESIGN SPEC, BY AF&PA) AND TPI. ITW, BCG CONNECTOR PLATES ARE MADE OF 20/18/16GA (W,H/SS/K) ASTM A653 GRADE 40/60 (W,K/H,SS) GALV. STEEL. APPLY PLATES TO EACH FACE OF TRUSS AND, UNLESS OTHERWISE LOCATED ON THIS DESIGN, POSITION PER DRAWINGS 160A-Z. ANY INSPECTION OF PLATES FOLLOWED BY (I) SHALL BE PER ANNEX A3 OF TPI 1-2002 SEC. 3. A SEAL ON THIS DRAWING INDICATES ACCEPTANCE OF PROFESSIONAL ENGINEERING RESPONSIBILITY SOLELY FOR THE TRUSS COMPONENT DESIGN SHOWN. THE SUITABILITY AND USE OF THIS COMPONENT FOR ANY BUILDING IS THE RESPONSIBILITY OF THE BUILDING DESIGNER, PER ANSI/TPI 1 SEC. 2.

JAMES E. COLLINS, JR. LICENSE No. 52212 STATE OF FLORIDA PROFESSIONAL ENGINEER

APR 05 '07

TC LL	—	PSF
TC DL	—	PSF
BC DL	10.0	PSF
BC LL	—	PSF
TOT. LD.	—	PSF
DUR. FAC. 1.0/1.15/1.25/1.33		
SPACING	24.0"	

REF	BC FILLER
DATE	2/23/07
DRWG	BCFILLER0207
-ENG	DLJ/KAR

Shane Russell

COLUMBIA COUNTY BUILDING DEPARTMENT

RESIDENTIAL MINIMUM PLAN REQUIREMENTS AND CHECKLIST FOR FLORIDA BUILDING CODE 2001
ONE (1) AND TWO (2) FAMILY DWELLINGS

ALL REQUIREMENTS ARE SUBJECT TO CHANGE
EFFECTIVE MARCH 1, 2002

ALL BUILDING PLANS MUST INDICATE THE FOLLOWING ITEMS AND INDICATE COMPLIANCE WITH CHAPTER 1606 OF THE FLORIDA BUILDING CODE 2001 BY PROVIDING CALCULATIONS AND DETAILS THAT HAVE THE SEAL AND SIGNATURE OF A CERTIFIED ARCHITECT OR ENGINEER REGISTERED IN THE STATE OF FLORIDA, OR ALTERNATE METHODOLOGIES, APPROVED BY THE STATE OF FLORIDA BUILDING COMMISSION FOR ONE-AND-TWO FAMILY DWELLINGS. FOR DESIGN PURPOSES THE FOLLOWING BASIC WIND SPEED AS PER FIGURE 1606 SHALL BE USED.

WIND SPEED LINE SHALL BE DEFINED AS FOLLOWS: THE CENTERLINE OF INTERSTATE 75.
1. ALL BUILDINGS CONSTRUCTED EAST OF SAID LINE SHALL BE ------- 100 MPH
2. ALL BUILDINGS CONSTRUCTED WEST OF SAID LINE SHALL BE -------110 MPH
3. NO AREA IN COLUMBIA COUNTY IS IN A WIND BORNE DEBRIS REGION

APPLICANT – PLEASE CHECK ALL APPLICABLE BOXES BEFORE SUBMITTAL

GENERAL REQUIREMENTS: Two (2) complete sets of plans containing the following:

Applicant	Plans Examiner	
☑	☐	All drawings must be clear, concise and drawn to scale ("Optional " details that are not used shall be marked void or crossed off). Square footage of different areas shall be shown on plans.
☑	☐	Designers name and signature on document (FBC 104.2.1). If licensed architect or engineer, official seal shall be affixed.
☑	☐	**Site Plan including:** a) Dimensions of lot b) Dimensions of building set backs c) Location of all other buildings on lot, well and septic tank if applicable, and all utility easements. d) Provide a full legal description of property.
☑	☐	**Wind-load Engineering Summary, calculations and any details required** a) Plans or specifications must state compliance with FBC Section 1606 b) The following information must be shown as per section 1606.1.7 FBC a. Basic wind speed (MPH) b. Wind importance factor (I) and building category c. Wind exposure – if more than one wind exposure is used, the wind exposure and applicable wind direction shall be indicated d. The applicable internal pressure coefficient e. Components and Cladding. The design wind pressure in terms of psf (kN/m²), to be used for the design of exterior component and cladding materials not specifically designed by the registered design professional
☑	☐	**Elevations including:**
☑	☐	a) All sides
☑	☐	b) Roof pitch
☐	☐	c) Overhang dimensions and detail with attic ventilation
☐	☐	d) Location, size and height above roof of chimneys
☐	☐	e) Location and size of skylights
☑	☐	f) Building height
☑	☐	e) Number of stories

Floor Plan including:

- ☑ ☐ a) Rooms labeled and dimensioned
- ☑ ☐ b) Shear walls
- ☑ ☐ c) Windows and doors (including garage doors) showing size, mfg., approval listing and attachment specs. (FBC 1707) and safety glazing where needed (egress windows in bedrooms to be shown)
- ☐ ☐ d) Fireplaces (gas appliance) (vented or non-vented) or wood burning with hearth
- ☐ ☐ e) Stairs with dimensions (width, tread and riser) and details of guardrails and handrails
- ☑ ☐ f) Must show and identify accessibility requirements (accessible bathroom)

Foundation Plan including:

- ☑ ☐ a) Location of all load-bearing wall with required footings indicated as standard Or monolithic and dimensions and reinforcing
- ☐ ☐ b) All posts and/or column footing including size and reinforcing
- ☐ ☐ c) Any special support required by soil analysis such as piling
- ☐ ☐ d) Location of any vertical steel

Roof System:

- ☑ ☐ a) Truss package including:
  1. Truss layout and truss details signed and sealed by Fl. Pro. Eng.
  2. Roof assembly (FBC 104.2.1 Roofing system, materials, manufacturer, fastening requirements and product evaluation with wind resistance rating)
- ☑ ☐ b) Conventional Framing Layout including:
  1. Rafter size, species and spacing
  2. Attachment to wall and uplift
  3. Ridge beam sized and valley framing and support details
  4. Roof assembly (FBC 104.2.1 Roofing systems, materials, manufacturer, fastening requirements and product evaluation with wind resistance rating)

Wall Sections including:

- ☐ ☐ a) Masonry wall
  1. All materials making up wall
  2. Block size and mortar type with size and spacing of reinforcement
  3. Lintel, tie-beam sizes and reinforcement
  4. Gable ends with rake beams showing reinforcement or gable truss and wall bracin details
  5. All required connectors with uplift rating and required number and size of fasteners for continuous tie from roof to foundation
  6. Roof assembly shown here or on roof system detail (FBC 104.2.1 Roofing system, materials, manufacturer, fastening requirements and product evaluation with resistance rating)
  7. Fire resistant construction (if required)
  8. Fireproofing requirements
  9. Shoe type of termite treatment (termicide or alternative method)
  10. Slab on grade
      a. Vapor retardant (6mil. Polyethylene with joints lapped 6 inches and sealed)
      b. Must show control joints, synthetic fiber reinforcement or Welded fire fabric reinforcement and supports
  11. Indicate where pressure treated wood will be placed
  12. Provide insulation R value for the following:
      a. Attic space
      b. Exterior wall cavity
      c. Crawl space (if applicable)

COLUMBIA COUNTY BUILDING DEPARTMENT
CHECKLIST FOR PERMITTING

Revised (9-22-06)

_____ **Notarized completed Building Permit Application**
Notes: ✓

_____ **If an Owner Builder, Notarized Disclosure Statement**
Notes: N/A

_____ **Recorded Deed or a Notarized Affidavit (form from the Building Dept.)**
Notes: ✓

_____ **Approved and Signed Site Plan from Environmental Health on the septic**
Notes: 07-306

_____ **Site plan with actual distances of the structure to each property line**
Notes: ✓

_____ **911 Address form, Contact 386.752.8787 for an appointment**
Notes: 128 SW Inwood Court LC 32025

_____ **Residential or Commercial Checklist completed**
Notes: ✓

_____ **Driving directions including all road names**
Notes: ✓

_____ **Well information (on plans or letter from the well driller)**
Notes: ✓

_____ **Before the 1st inspection Recorded Notice of Commencement signed by owner**
Notes:

_____ **2 sets of plans (blueprints)**
Notes: ✓

_____ **2 sets of sealed truss engineering**
Notes: ✓

_____ **2 sets of energy code & manual J**
Notes: ✓

_____ **2 sets of engineering packets including specs on windows, doors, roof and etc. and/or Product Approval Code.**
Notes: ✓

CERTIFICATE OF

OCCUPANCY

COLUMBIA COUNTY, FLORIDA

Department of Building and Zoning Inspection

This Certificate of Occupancy is issued to the below named permit holder for the building and premises at the below named location, and certifies that the work has been completed in accordance with the Columbia County Building Code.

Parcel Number 12-4S-16-02939-129 **Building permit No.** 000025751

Use Classification SFD,UTILITY **Fire:** 5.58

Permit Holder EDGLEY CONSTRUCTION **Waste:** 16.75

Owner of Building SHANE RUSSELL **Total:** 22.33

Location: 128 SW INWOOD COURT, LAKE CITY, FL

Date: 09/26/2007

Harry Dicks

Building Inspector

POST IN A CONSPICUOUS PLACE
(Business Places Only)

Shane Russell
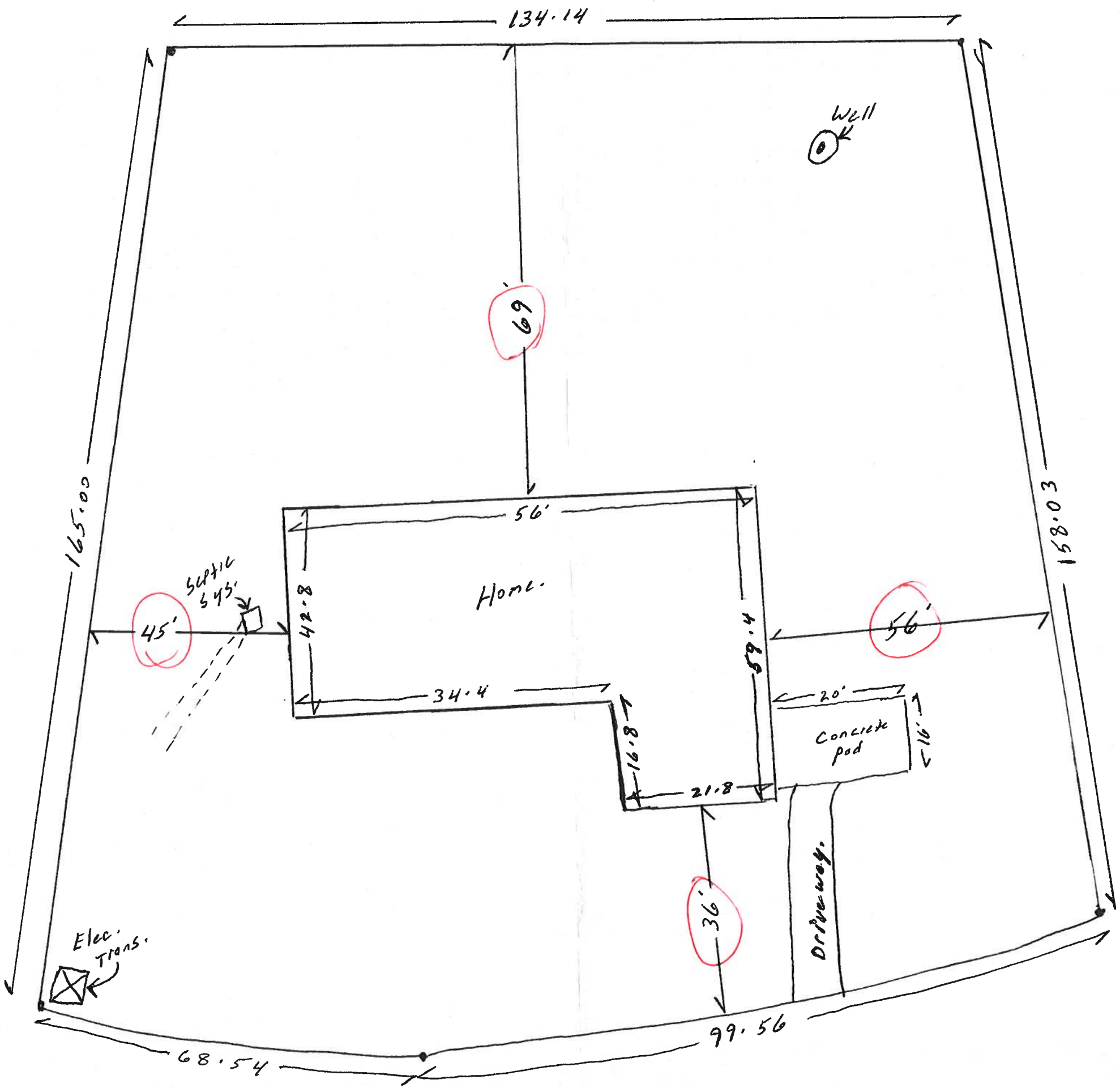
128 S.W. Inwood Ct.
Lake City FLA. 32025
Lot #29
Creekside Sub.