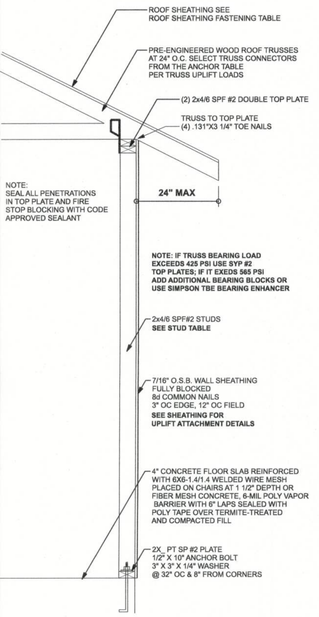

ONE STORY WALL SECTION

SCALE: 3/4" = 1'-0"

ROOF SHEATHING FASTENING TABLE (RAFTER / TRUSS SG = 0.49)				
Wind Speed	Sheathing Thickness Plywood Or OSB	Required Nail	Nail spacing along panel edges	Nail spacing along intermediate supports in the panel field
120 mph Exp. B	7/16"	ASTM F1667 RSRS-01 (2 3/8" x 0.113")	6" oc	12" oc
120 mph Exp. C	7/16"	ASTM F1667 RSRS-01 (2 3/8" x 0.113")	6" oc	6" oc
120 mph Exp. D	19/32"	ASTM F1667 RSRS-03 (2 1/2" x 0.131") or ASTM F1667 RSRS-04 (3" x 0.120")	6" oc	6" oc
130 mph Exp. B	7/16"	ASTM F1667 RSRS-01 (2 3/8" x 0.113")	6" oc	6" oc
130 mph Exp. C	**15/32"**	**ASTM F1667 RSRS-01 (2 3/8" x 0.113")**	**6" oc**	**6" oc**
130 mph Exp. D	19/32"	ASTM F1667 RSRS-03 (2 1/2" x 0.131") or ASTM F1667 RSRS-04 (3" x 0.120")	6" oc	6" oc
140 mph Exp. B	7/16"	ASTM F1667 RSRS-01 (2 3/8" x 0.113")	6" oc	6" oc
140 mph Exp. C	19/32"	ASTM F1667 RSRS-03 (2 1/2" x 0.131") or ASTM F1667 RSRS-04 (3" x 0.120")	6" oc	6" oc
140 mph Exp. D	19/32"	ASTM F1667 RSRS-03 (2 1/2" x 0.131") or ASTM F1667 RSRS-04 (3" x 0.120")	6" oc	6" oc
150 mph Exp. C	19/32"	ASTM F1667 RSRS-03 (2 1/2" x 0.131") or ASTM F1667 RSRS-04 (3" x 0.120")	6" oc	6" oc
150 mph Exp. D	19/32"	ASTM F1667 RSRS-03 (2 1/2" x 0.131") or ASTM F1667 RSRS-04 (3" x 0.120")	4" oc	4" oc

Note: For sheathing located a minimum of 4 feet from the perimeter edge of the roof, including 4 feet on each side of ridges and hips, nail spacing is permitted to be 6 inches on center along panel edges and 6 inches on center along intermediate supports in the panel field. Note: This table specifies the code minimum thickness of roof sheathing. The thickness of the sheathing may need to be increased based in the type of roofing material being used. See manufacturer Florida product approval.

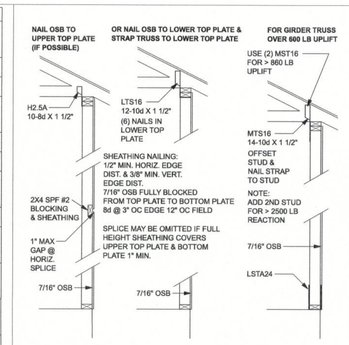

SHEATHING FOR UPLIFT ATTACHMENT DETAILS

ONE STORY WOOD FRAME

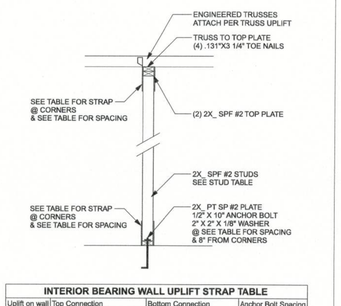

1 PLY GIRDER TRUSS HOLD DOWN TABLE		
Uplift	Top Connection	Bottom Connection
up to 1125 lb	HTS16	LSTA24, 14-10d Wrap under plate w/ anchor bolt within 6"
up to 2250 lb	(2) HTS16	HTT4

MULTI PLY GIRDER TRUSS HOLD DOWN TABLE		
Uplift	Top Connection	Bottom Connection
up to 1125 lb	HTS16	LSTA24, 14-10d Wrap under plate w/ anchor bolt within 6"
up to 2250 lb	(2) HTS16	HTT4
up to 3375 lb	(3) HTS16	HTT4

INTERIOR BEARING WALL UPLIFT STRAP TABLE			
Uplift on wall	Top Connection	Bottom Connection	Anchor Bolt Spacing
227 plf	SP2 @ 32" OC	SP1 @ 32" OC	48" OC
454 plf	SP2 @ 16" OC	SP1 @ 16" OC	32" OC
309 plf	LSTA24, 14-10d @ 48" OC Wrap Under Plate	LSTA24, 14-10d @ 48" OC Wrap Over Plate	48" OC
465 plf	LSTA24, 14-10d @ 32" OC Wrap Under Plate	LSTA24, 14-10d @ 32" OC Wrap Over Plate	32" OC

(TYP.) INTERIOR BEARING WALL

ONE STORY WOOD FRAME w/ STRAPS & ANCHORS

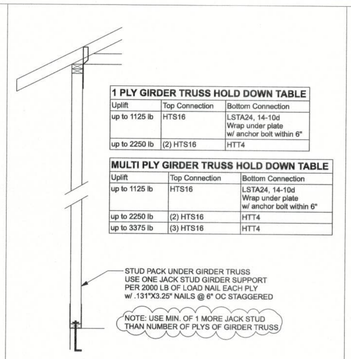

(TYP.) GIRDER TRUSS HOLD DOWN DETAIL

WOOD FRAME w/ STRAPS & ANCHORS

CONNECTOR TABLE				
Uplift SP	Uplift SPF	Truss Connector	To Plate	To Truss/Rafter
615	485	SDWC15600	-	-
415	290	H3	4-8d x1 1/2"	4-8d x 1 1/2"
575	495	H2.5A	5-8d x1 1/2"	5-8d x 1 1/2"
1340	1015	H10A	9-10d1 1/2"	9-10d1 1/2"
720	620	LTS12-20	6-10d1 1/2"	6-10d1 1/2"
1000	860	MTS12-30	7-10d1 1/2"	7-10d1 1/2"
1450	1245	HTS20-30	12-10d1 1/2"	12-10d1 1/2"
Uplift SP	**Uplift SPF**	**Strap Ties**	**To One Member**	**To Other Member**
1235	1235	LSTA21	8-10d	8-10d
1640	1456	MSTA24	9-10d	9-10d
1030	1030	CS20	7-10d	7-10d
Uplift SP	**Uplift SPF**	**Stud Plate Ties**	**To Stud**	**To Plate**
585	535	SP1	6-10d	4-10d
1065	605	SP2	6-10d	6-10d
771	771	LSTA24	10-10d	wrap under or over plate
1235	1235	LSTA24	14-10d	wrap under or over plate
Uplift SP	**Uplift SPF**	**Holdowns @ Stemwall**	**To Stud / Post**	**Anchor**
1825	1800	DTT2Z	8-SDS 1/4"x1 1/2"	1/2"x12" Titen HD
4235	3640	HTT4	18-16d x2 1/2"	1/2"x12" Titen HD
Uplift SP	**Uplift SPF**	**Holdowns @ Mono**	**To Stud / Post**	**Anchor**
1825	1800	DTT2Z	8-SDS 1/4"x1 1/2"	1/2"x6" Titen HD
4235	3640	HTT4	18-16d x2 1/2"	1/2"x12" Titen HD
Uplift SP	**Uplift SPF**	**Post Bases @ Stemwall**	**To Post**	**Anchor**
1900		ABU44Z	12-16d	5/8"x12" Drill & Epoxy
2475		ABU66Z	12-16d	5/8"x12" Drill & Epoxy
Uplift SP	**Uplift SPF**	**Post Bases @ Mono**	**To Post**	**Anchor**
1900		ABU44Z	12-16d	5/8"x7" Drill & Epoxy
2475		ABU66Z	12-16d	5/8"x7" Drill & Epoxy

GENERAL NOTES:

TRUSSES: TRUSSES SHALL BE DESIGNED BY A FLORIDA LICENSED ENGINEER IN ACCORDANCE WITH THE FBCR. TRUSS ENGINEERING SHALL INCLUDE TRUSS DESIGN, PLACEMENT PLANS, TEMPORARY AND PERMANENT BRACING DETAILS, TRUSS-TO-TRUSS CONNECTIONS, AND UPLIFT AND REACTION LOADS FOR ALL BEARING LOCATIONS. TRUSS ENGINEERING IS THE RESPONSIBILITY OF THE TRUSS MANUFACTURER AND SHALL BE SIGNED & SEALED BY THE MANUFACTURER'S DESIGN ENGINEER. IT IS THE BUILDER'S RESPONSIBILITY VERIFY THE TRUSS DESIGNER FULLY SATISFIED ALL THE ABOVE REQUIREMENTS AND TO SELECT UPLIFT CONNECTIONS BASED ON TRUSS ENGINEERING UPLIFT AND PROVIDE FOOTINGS FOR INTERIOR BEARING WALLS. BUILDER IS TO FURNISH TRUSS ENGINEERING TO WIND LOAD ENGINEER FOR REVIEW OF TRUSS REACTIONS ON THE BUILDING STRUCTURE. STRAP 2X6 RAFTERS WITH MIN. UPLIFT CONNECTION 415LB EACH END. 2X8 RAFTERS 700 LB EACH END.

SITE PREPARATION: SITE ANALYSIS AND PREPARATION IS NOT PART OF THIS PLAN

FOUNDATION: CONFIRM THAT THE FOUNDATION DESIGN & SITE CONDITIONS MEET GRAVITY LOAD REQUIREMENTS (ASSUME 1500 PSF BEARING CAPACITY UNLESS VISUAL OBSERVATION OR SOILS TEST PROVES OTHERWISE)

CONCRETE: MINIMUM COMPRESSIVE STRENGTH OF CONCRETE AT 28 DAYS, F'c = 2500 PSI.

WELDED WIRE REINFORCED SLAB: 6" x 6" W1.4 x W1.4, FB = 85KSI, WELDED WIRE REINFORCEMENT FABRIC (W.W.M.) CONFORMING TO ASTM A185; LOCATED IN MIDDLE OF THE SLAB; SUPPORTED WITH APPROVED MATERIALS OR SUPPORTS AT SPACINGS NOT TO EXCEED 3'.

FIBER CONCRETE SLAB: CONCRETE SLABS ON GROUND CONTAINING SYNTHETIC FIBER REINFORCEMENT; FIBER LENGTH 1/2 INCH TO 2 INCHES. DOSAGE AMOUNTS FROM 0.75 TO 1.5 POUNDS PER CUBIC YARD PER THE MANUFACTURER'S RECOMMENDATIONS. FIBERS TO COMPLY WITH ASTM C 1116. SUPPLIER TO PROVIDE ASTM C 1116 CERTIFICATION OF COMPLIANCE WHEN REQUESTED BY BUILDING OFFICIAL.

CONTROL JOINTS: WHERE SPECIFIED, SAWN CONTROL JOINTS IN SLAB-ON-GRADE SHALL BE CUT IN ACCORDANCE WITH ACI 302. JOINTS SHALL BE CUT WITHIN 12 HOURS OF SLAB PLACEMENT. THE LENGTH / WIDTH RATIOS OF SLAB AREAS SHALL NOT EXCEED 1.5 AND TYPICAL SPACING OF CUTS TO BE 12FT. DO NOT CUT WWM OR REINFORCING STEEL. (RECOMMENDED LOCATION OF CONTROL JOINTS IS SUBJECT TO OWNER AND CONTRACTORS APPROVAL. THE CONTROL JOINTS ARE NOT INTENDED TO PREVENT CRACKS BUT RATHER TO ENCOURAGE THE SLAB TO CRACK ON A GIVEN LINE.)

REBAR: ASTM A 615, GRADE 40, DEFORMED BARS, FY = 40 KSI. ALL LAP SPLICES 40 * DB (25" FOR #5 BARS); UNO. ALL REINFORCEMENT SHALL BE DETAILED AND PLACED IN ACCORDANCE WITH ACI 315-96, U.N.O.

ROOF SHEATHING: ALL ROOFS ARE HORIZONTAL DIAPHRAGMS; SHEATHING, UNBLOCKED, APPLIED PERPENDICULAR TO FRAMING, OVER A MINIMUM OF 3 FRAMING MEMBERS, WITH PANEL EDGES STAGGERED.

STRUCTURAL CONNECTORS: MANUFACTURERS AND PRODUCT NUMBER FOR CONNECTORS, ANCHORS, AND REINFORCEMENT ARE LISTED FOR EXAMPLE NOT ENDORSEMENT. AN EQUIVALENT DEVICE OF THE SAME OR OTHER MANUFACTURER CAN BE SUBSTITUTED FOR ANY DEVICES LISTED IN THE EXAMPLE TABLES AS LONG AS IT MEETS THE REQUIRED LOAD CAPACITIES. MANUFACTURER'S INSTALLATION INSTRUCTIONS MUST BE FOLLOWED TO ACHIEVE RATED LOADS.

ANCHOR BOLTS: A-307 ANCHOR BOLTS WITH MINIMUM EMBEDMENT AS SPECIFIED IN DRAWINGS BUT NO LESS THAN 7" IN CONCRETE OR REINFORCED BOND BEAM OR 15" IN GROUTED CMU.

BUILDER'S RESPONSIBILITY:
THE BUILDER AND OWNER ARE RESPONSIBLE FOR THE FOLLOWING, WHICH ARE SPECIFICALLY NOT PART OF THE WIND LOAD ENGINEER'S SCOPE OF WORK.
CONFIRM SITE CONDITIONS, FOUNDATION BEARING CAPACITY, GRADE AND BACKFILL HEIGHT, WIND SPEED AND DEBRIS ZONE, AND FLOOD ZONE.
PROVIDE MATERIALS AND CONSTRUCTION TECHNIQUES, WHICH COMPLY WITH FBCR REQUIREMENTS FOR THE STATED WIND VELOCITY AND DESIGN PRESSURES.
PROVIDE A CONTINUOUS LOAD PATH FROM TRUSSES TO FOUNDATION. IF YOU BELIEVE THE PLAN OMITS A CONTINUOUS LOAD PATH CONNECTION, CALL THE WIND LOAD ENGINEER IMMEDIATELY.
VERIFY THE TRUSS MANUFACTURER'S SEALED ENGINEERING INCLUDES TRUSS DESIGN, PLACEMENT PLANS, TEMPORARY AND PERMANENT BRACING DETAILS, TRUSS-TO-TRUSS CONNECTIONS, AND UPLIFT AND REACTION LOADS FOR ALL BEARING LOCATIONS.

ROOF SYSTEM DESIGN:
THE SEAL ON THESE PLANS FOR COMPLIANCE WITH FBCR, IS BASED ON REACTIONS, UPLIFTS, AND BEARING LOCATIONS IN TRUSS ENGINEERING SUBMITTED TO THE WIND LOAD ENGINEER. IT IS THE RESPONSIBILITY OF THE BUILDER TO CHECK ALL DETAILS OF THE COMPLETE ROOF SYSTEM DESIGN SUBMITTED BY THE TRUSS MANUFACTURER AND HAVE IT SIGNED, AND SEALED BY A DESIGN PROFESSIONAL FOR CORRECT APPLICATION OF FBCR REQUIRED LOADS AND ANY SPECIAL LOADS. THE BUILDER IS RESPONSIBLE TO REVIEW EACH INDIVIDUAL TRUSS MEMBER AND THE TRUSS ROOF SYSTEM AS A WHOLE AND TO PROVIDE RESTRAINT FOR ANY LATERAL BRACING. THE BUILDER SHOULD USE CARE CHECKING THE ROOF DESIGN BECAUSE THE WIND LOAD ENGINEER IS SPECIFICALLY NOT RESPONSIBLE FOR THE TRUSS LAYOUT WHICH WAS CREATED BY THE TRUSS MANUFACTURER AND THE TRUSS DESIGNER ALSO DENIES RESPONSIBILITY FOR THE LAYOUT PER NOTES ON THEIR SEALED TRUSS SHEETS.

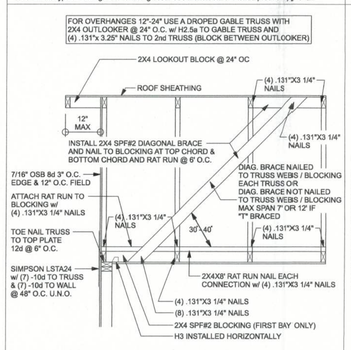

SPACE RAT RUN & DIAGONAL BRACE 6'-0" O.C.
FOR GABLE HEIGHT UP TO 25'-0" 130 MPH, EXP. C, ENCLOSED

(TYP.) GABLE BRACING DETAIL

WOOD FRAME

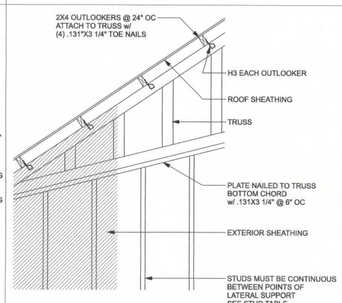

(TYP.) GABLE WALL w/ VAULTED CEILING

WOOD FRAME

EXTERIOR WALL STUD TABLE FOR SPF #2 STUDS:	
THIS STUD HEIGHT TABLE IS PER 2012 WFCM, TABLE 3.20B5, EXTERIOR LOAD BEARING & NON LOAD BEARING STUD LENGTHS FOR WALLS WITH OSB EXTERIOR AND 1/2" GYP INTERIOR RESISTING INTERIOR ZONE WINDLOADS, 130 MPH, EXPOSURE C, STUD DEFLECTION LIMIT H/240 (NOT OK FOR BRITTLE FINISH). STUD SPACINGS SHALL BE MULTIPLIED BY 0.8 FOR FRAMING LOCATED WITHIN 4 FEET OF CORNERS FOR END ZONE LOADING. (END ZONE EXAMPLE 16" O.C. x 0.8 = 12.8" O.C.)	
(1) 2x4 @ 16" OC	TO 10'-1" STUD HEIGHT
(1) 2x4 @ 12" OC	TO 11'-2" STUD HEIGHT
(1) 2x6 @ 16" OC	TO 15'-7" STUD HEIGHT
(1) 2x6 @ 12" OC	TO 17'-3" STUD HEIGHT

GRADE & SPECIES TABLE			
		Fb	E
2x8	SP #2	925	1.4
2x10	SP #2	800	1.4
2x12	SP #2	750	1.4
GLB	24F-V3 SP	2600	1.9
LSL	TIMBERSTRAND	1700	1.7
LVL	MICROLAM	2950	2.0
PSL	PARALAM	2900	2.0

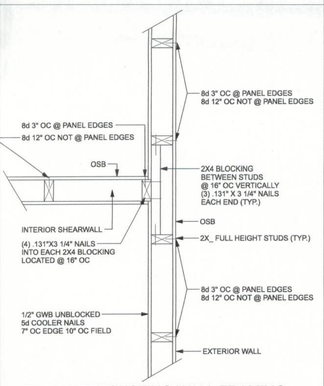

(TYP.) INTERSECTING WALL FRAMING

WOOD FRAME

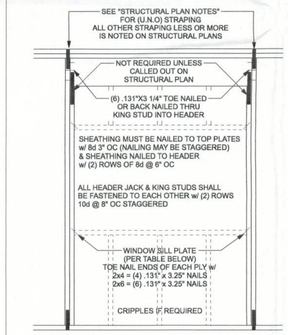

HEADER STRAP TABLE		
Uplift	Top Connection	Bottom Connection
< 1235	LSTA24, 14-10d wrap over plate	LSTA24, 14-10d wrap under plate 1/2" x 10" Anchor bolt w/ 3" x 3" x 1/4" washer must be located within 6" of king stud @ all door locations
< 1455	MSTA24, 18-10d header to jacks	DTT2Z
< 1800	(2) MSTA24, 18-10d header to jacks	DTT2Z
< 2910	(2) MSTA24, 18-10d header to jacks	HTT4

SILL PLATE SPANS FOR 10'-0" WALL HEIGHT					
DESIGN WIND SPEED	MAX. SPANS FOR SPF #2				BASED ON WFCM TABLE A-3.23B
	(1) 2x4	(2) 2x4	(1) 2x6	(2) 2x6	
130 MPH EXP. C	5'-2"	7'-9"	7'-7"	11'-3"	FOR OTHER WALL HEIGHTS (H) SILL SPAN SHALL BE DIVIDED BY (H/10)

TYPICAL HEADER STRAPING DETAIL

ONE STORY WOOD FRAME w/ STRAPS & ANCHORS

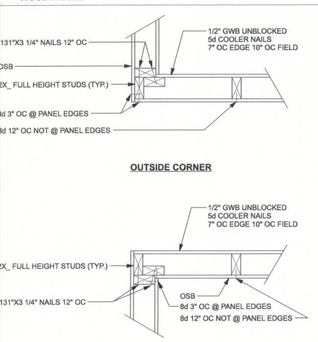

(TYP.) CORNER FRAMING

WOOD FRAME

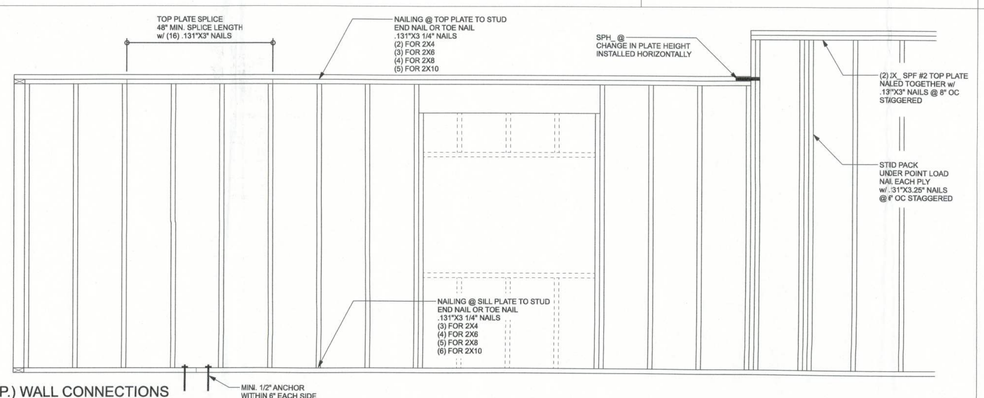

(TYP.) WALL CONNECTIONS

ONE STORY WOOD FRAME

2X6 SP #2 GARAGE DOOR BUCK ATTACHMENT

ATTACH GARAGE DOOR BUCK TO STUD PACK AT EACH SIDE OF DOOR OPENING WITH 3/8"X4" LAG SCREWS w/ 1" WASHER LAG SCREWS MAY BE COUNTERSUNK. HORIZONTAL JAMBS DO NOT TRANSFER LOAD. CENTER LAG SCREWS OR STAGGER 16d NAILS OR (2) ROWS OF .131X3 1/4" GN PER TABLE BELOW.

DOOR WIDTH	3/8"X4" LAG	16d STAGGER	(2) ROWS OF .131"X3 1/4" NAILS
8' - 10'	24" OC	5" OC	5" OC
11' - 15'	18" OC	4" OC	4" OC
16' - 18'	16" OC	3" OC	3" OC

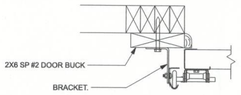

(TYP.) GARAGE DOOR BUCK INSTALLATION

WOOD FRAME

DESIGN CRITERIA & LOADS:	
BUILDING CODE	8TH EDITION FLORIDA BUILDING CODE RESIDENTIAL (2023)
CODE FOR DESIGN LOADS	ASCE 7-22
WINDLOADS	
BASIC WIND SPEED (ASCE 7-22, 3S GUST)	130 MPH
WIND EXPOSURE (BUILDER MUST FIELD VERIFY)	C
TOPOGRAPHIC FACTOR (BUILDER MUST FIELD VERIFY)	I
RISK CATEGORY	II
ENCLOSURE CLASSIFICATION	ENCLOSED
INTERNAL PRESSURE COEFFICIENT	0.18
ROOF ANGLE	7-45 DEGREES
MEAN ROOF HEIGHT	30 FT
C&C DESIGN PRESSURES	SEE TABLE
FLOOR LOADING	
ROOMS OTHER THAN SLEEPING ROOM	40 PSF LIVE LOAD
SLEEPING ROOMS	30 PSF LIVE LOAD
ROOF LOADING	
FLAT OR < 4:12	20 PSF LIVE LOAD
4:12 TO < 12:12	16 PSF LIVE LOAD
12:12 & GREATER	12 PSF LIVE LOAD
SOIL BEARING CAPACITY	1500 PSF
FLOOD ZONE	THIS BUILDING IS NOT IN THE FLOOD ZONE

COMPONENT & CLADING DESIGN PRESSURES 130 MPH (EXP C)				
EFFECTIVE WIND AREA (FT2)	**ZONE 4 INTERIOR**		**ZONE 5 END 4' FROM ALL OUTSIDE CORNER**	
0 - 20	+25.6(Vasd)	-27.8(Vasd)	+25.6(Vasd)	-34.2(Vasd)
0 - 20	+42.6(Vult)	-46.2(Vult)	+42.6(Vult)	-57(Vult)
GARAGE DOOR DESIGN PRESSURES 130 MPH (EXP C)				
9x7 GARAGE DOOR	+22.6(Vasd)	-25.5(Vasd)		
16x7 GARAGE DOOR	+21.7(Vasd)	-24.1(Vasd)		

Bill & Pat Kimble Addition

PROJECT ADDRESS:
319 SW Chippewa Gln, FL White, FL

COLUMBIA COUNTY BUILDING DEPT. Received for FILE COPY Code Compliance PLANS EXAMINER

Mark Disosway FL PE 53915

MARK D. DISOSWAY III LICENSE No 53915 STATE OF FLORIDA PROFESSIONAL ENGINEER

Wednesday, May 15, 2024

DIMENSIONS:
Stated dimensions supercede scaled dimensions. Refer all questions to Mark Disosway, P.E. for resolution. Do not proceed without clarification.

COPYRIGHTS AND PROPERTY RIGHTS:
Mark Disosway, P.E. hereby expressly reserves its common law copyrights and property right in these instruments of service. This document is not to be reproduced, altered or copied in any form or manner without first the express written permission and consent of Mark Disosway.

CERTIFICATION: I hereby certify that I have examined this plan, and that the applicable portions of the plan, relating to wind engineering comply with the 8th Edition Florida Building Code Residential (2023) to the best of my knowledge.

LIMITATION: This design is valid for one building, at specified location.

Mark Disosway P.E.
163 SW Midtown Place
Suite 103
Lake City, Florida 32025
386.754.5419
disoswaydesign@gmail.com

JOB NUMBER:
230852

S-1

OF 3 SHEETS