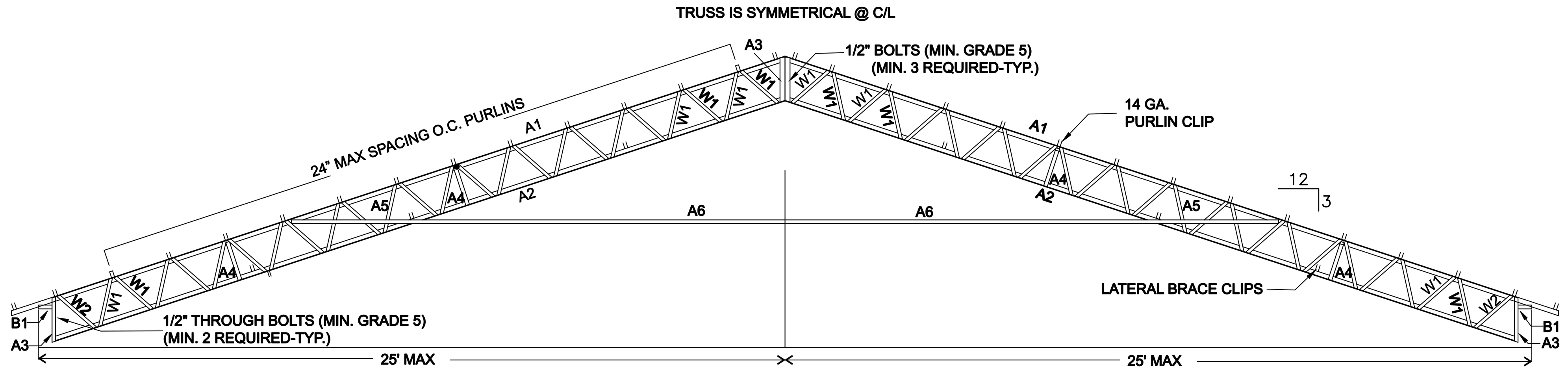

TYPICAL TRUSS DETAIL

SCALE : N.T.S.

CUT LIST OF MATERIALS

ITEM NO.	DESCRIPTION		LENGTH	NUMBER REQUIRED	MATERIAL
A1	TOP CHORD	LL 2 X 2 X 3/16*	26'3 ½"	2	50 KSI
A2	BOTTOM CHORD	LL 2 X 2 X 3/16*	26'3 ½"	2	50 KSI
A3	VERTICAL CHORD	LL 2 X 2 X 3/16*	1'– 6"	4	50 KSI
A4	VERTICAL CHORD	L 1 1/2 X 1 1/2 X 3/16	1'– 6"	4	50 KSI
A5	TIE	L 1-1/2 X 1-1/2 X 3/16	4'–8"	2	A36
A6	TIE	L 1-1/2 X 1-1/2 X 3/16	25'–6"	1	A36
W1	WEB	L 1-1/4 X 1-1/4 X 3/16	1'–8"	48	A36
W2	WEB	L 1-1/4 X 1-1/4 X 3/16	1'–9 1/8"	2	A36
B1	BASE	LL 2 X 2 X 3/16*	5 1/2"	2	50 KSI

NOTE: LL * DENOTES DOUBLE ANGELS

FABRICATION NOTES:
1. ALL WELDS SHALL ADHERE TO AWS STANDARDS.
2. ALL STEEL AND FABRICATION SHALL ADHERE TO ASCI STANDARDS.
3. ALL FASTENERS SHALL BE INSTALLED PER MANUFACTURERS SPECIFICATIONS.
4. CONTRACTOR IS RESPONSIBLE FOR TEMPORARY AND PERMANENT CONSTRUCTION BRACING.
5. PURLINS SHALL BE 2X6 #2 SYP (MAX SPACE @2'-0" O.C.)
6. ALL DIMENSIONS SHALL BE VERIFIED BY FABRICATOR PRIOR TO FABRICATING.

TRUSS DESIGN CAN BE USED FOR TRUSS LENGTHS SHORTER THAN 50 FEET.
ITEM QUANTITY AND DIMENSIONS ARE TO BE MODIFIED FOR SHORTER TRUSS LENGTHS.
DISTANCE FROM A1 TO A2 ALONG A4 MUST BE 18" ON ALL MODIFIED LENGTHS

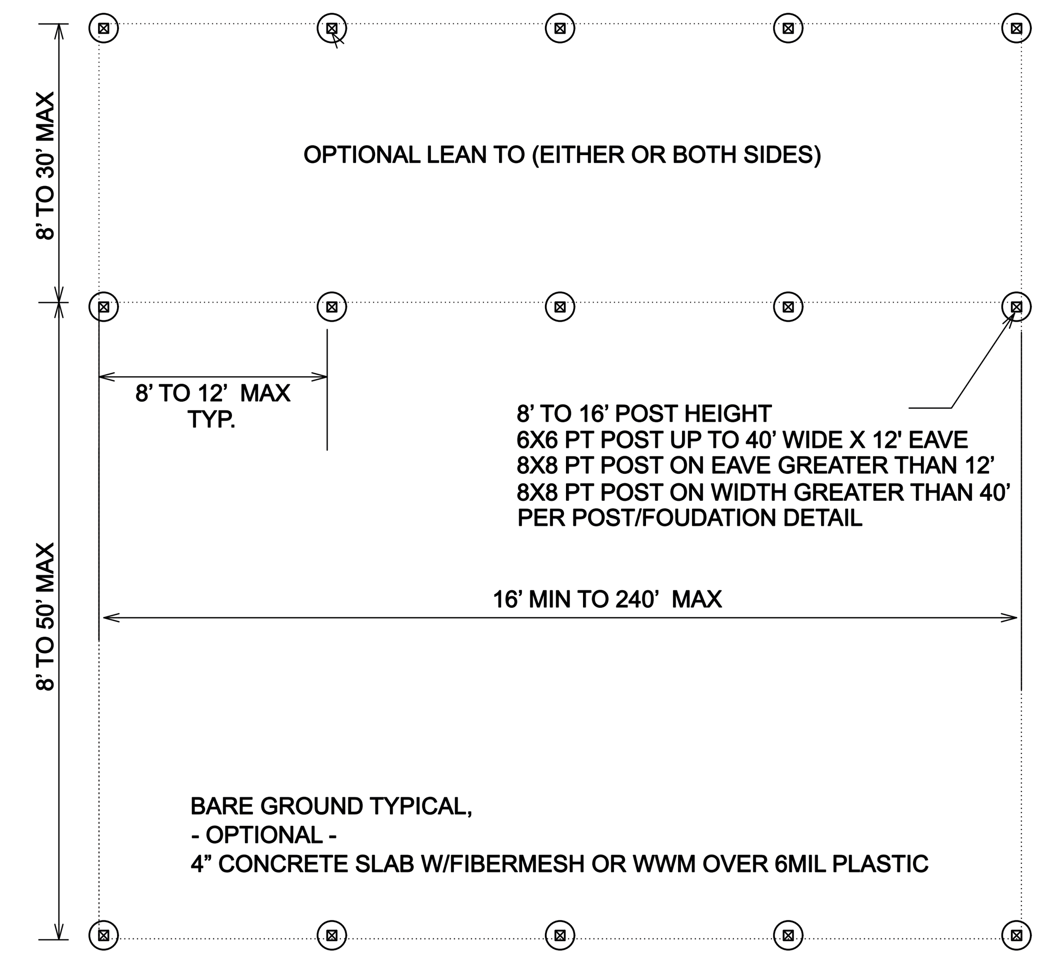

FOUNDATION PLAN

SCALE : N.T.S.

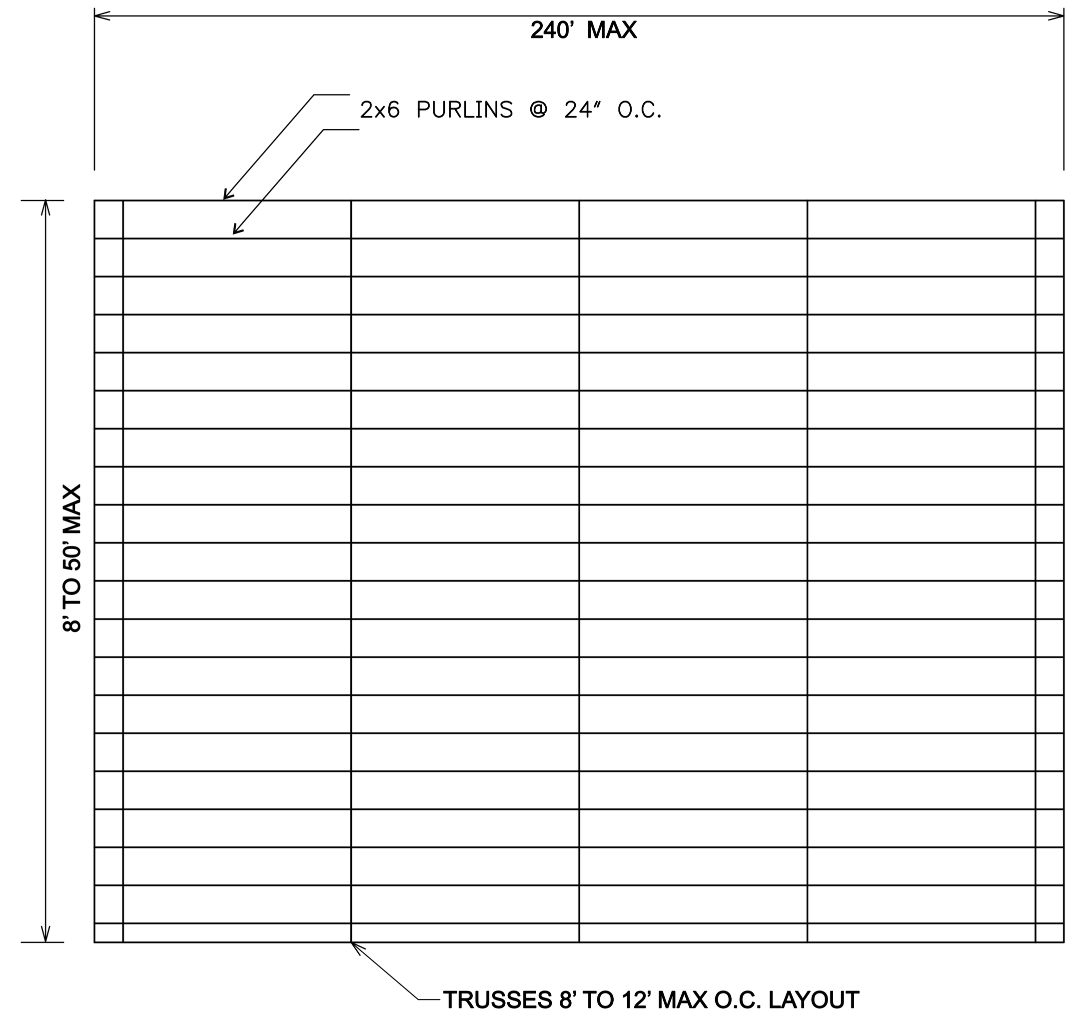

TRUSS AND PURLIN LAYOUT

SCALE : N.T.S.

FL PRODUCT APPROVAL NUMBER	MANUFACTURER	PRODUCT DESCRIPTION
FL17996.5-R0; FL17996.6-R0	ELIXER	PERSONNEL DOOR
FL21450.6: FL14425.1	JANUS	ROLL-UP DOOR
FL9094-R4	AMARR	ROLL-UP DOOR
FL239.1 R-17	PGT INDUSTRIES	WINDOW 32" x 26"
FL12904.2-R4	POCOHONTAS	WINDOW 30" x 30"
FL9555.2-R4	UNION	26 GA MASTER RIB PANEL
FL15730.6	SIMPSON	WEDGE-ALL ANCHOR
FL10456.2	SIMPSON	H3 TIE
FL10446.8	SIMPSON	L30 ANGLE
FL14081.1-R2	FABRAL	26 GA. GRANDBEAM PANEL
FL30023.1	SANT GROUP	29 GA. SG RIB ROOF PANEL

DESIGN STATEMENT:

THESE PLANS WERE DESIGNED FOLLOWING THE 2020 7TH EDITION FLORIDA BUILDING CODE AND ASCE 7-10. INCLUDING CHAPTER 16 ON STRUCTURAL DESIGN. AN ULTIMATE WIND SPEED OF 140 MPH, (3 SECOND GUST) IN WIND EXPOSURE CATEGORY "B". THIS STRUCTURE HAS BEEN DESIGNED AS RISK CATEGORY I. THE COMPONENTS AND CLADDING WERE DESIGNED BASED ON A WIND PRESSURE. THIS STRUCTURE HAS BEEN DESIGNED AS EITHER AN OPEN/ENCLOSED OR PARTIALLY ENCLOSED STRUCTURE AS PER PLAN NOTES.

This item has been digitally signed and sealed by Carol Chadwick, P.E. on the date adjacent to the seal. Printed copies of this document are not considered signed and sealed and the signature must be verified on any electronic copies.

BUILDING TYPE

OPEN POLE BARN
STORAGE STRUCTURE

BUILDING DIMENSIONS

40' X 60' X 16' POLE BARN
12' X 16' LEAN TO

PROJECT LOCATION/NAME

SANDY RYAN
681 SW JOE MARKHAM DRIVE
LAKE CITY, FL

REVISIONS:

DATE	BY	DESCRIPTION

GENERAL NOTES:

1. ALL CONSTRUCTION SHALL BE PROVIDED IN ACCORDANCE WITH THE 2023 8TH EDITION FLA BUILDING CODE AND ASCE 7-10 WIND CODES FOR AN ULTIMATE WIND SPEED OF 140 MPH AND GREATER. THESE PLANS INCLUDE DESIGN FOR ALL WIND SPEEDS UP TO AN INCLUDING 170 MPH ULTIMATE WIND SPEED.
2. ALL ROOFING TO BE MIN 29 GAUGE OR BETTER, ATTACHED TO PURLINS AS SHOWN.
3. ALL CONCRETE WORK SHALL BE 3000 PSI AT 28 DAYS. CONTROL JOINTS SHALL BE CUT AT DISTANCES NO GREATER THAN 15' ELECTRICAL CONDUIT AND OTHER PIPES TO BE EMBEDDED IN STRUCTURAL CONCRETE FLOOR SLABS SHALL BE PLACED IN ACCORDANCE WITH ACI-318, PARAGRAPH 6.3.
4. MINIMUM SOIL BEARING SHALL BE ASSUMED AT 2000 PSF
5. ALL WINDOWS AND DOORS SHALL BE INSTALLED PER MANUFACTURERS SPECS.
6. ALL STEEL BUILDING MATERIALS ARE FLOOD RESISTANT AND WILL NOT BE DAMAGED BY FLOOD OR RAIN.
7. DESIGN LOADINGS:
   - ROOF LIVE LOAD - 20 PSF
   - DEAD LOADS:
     - TRUSS SPACING @12' - DL =6 PSF
     - TRUSS SPACING @ 10' - DL = 9 PSF
     - TRUSS SPACING @ 8' - DL = 12 PSF
   - DESIGN SPEED - 170 MPH
   - WIND RISK CATEGORY - 1
   - EXPOSURE CATEGORY - B
   - IMPORTANCE FACTOR - 1.0
   - BUILDING CATEGORY I
8. WOOD FRAMING AND FASTENERS TO MEET NDS-2012 REQUIREMENTS.
9. FASTENER REQUIREMENTS: (1) ALL NAILS ARE COMMON GALVANIZED (2) ALL BOLTS ARE TO BE GALVANIZED STEEL AND INCLUDE NUTS AND WASHERS (3) ALL OTHER HARDWARE (SIMPSON, ETC.) IS TO BE INSTALLED ACCORDING TO THE MANUFACTUERER'S SPECIFICATIONS
10. NAILING SIZE AND NUMBER SHALL SATISFY TABLES 2306.2.(1), 2306.3.(1) AND 2306.3.(#) fbc UNLESS OTHERWISE INDICATED.
11. ALL FASTENERS EXPOSED TO THE WEATHER SHALL BE TREATED FOR WEATHER RESISTANCE AND COMPATIBLE WITH THE PRESSURE TREATED WOODS USED.
12. ALL WOOD TO BE #2 YP OR BETTER, ALL WOOD TO BE IN CONTACT WITH CONCRETE TO BE P.T.
13. INTERNAL PRESSURE COEFFICIENT = 0 OPEN
14. COMPONENTS / CLADDING
    - ZONE 1 = +/- 30 PSF
    - ZONE 2 = +30 PSF / -53 PSF
    - ZONE 3 = +3 PSF / -83 PSF

CAROL J. CHADWICK LICENSE No. 82560 STATE OF FLORIDA PROFESSIONAL ENGINEER

Digitally signed by Carol Chadwick
DN: c=US, o=Florida, dnQualifier=A01410D0000018D463B4E7500032FEE, cn=Carol Chadwick
Date: 2024.02.27 21:11:59 -05'00'

PROJECT: GREATER SOUTH BARNS

SHEET TITLE: TYPICAL POLE BARN BUILDING

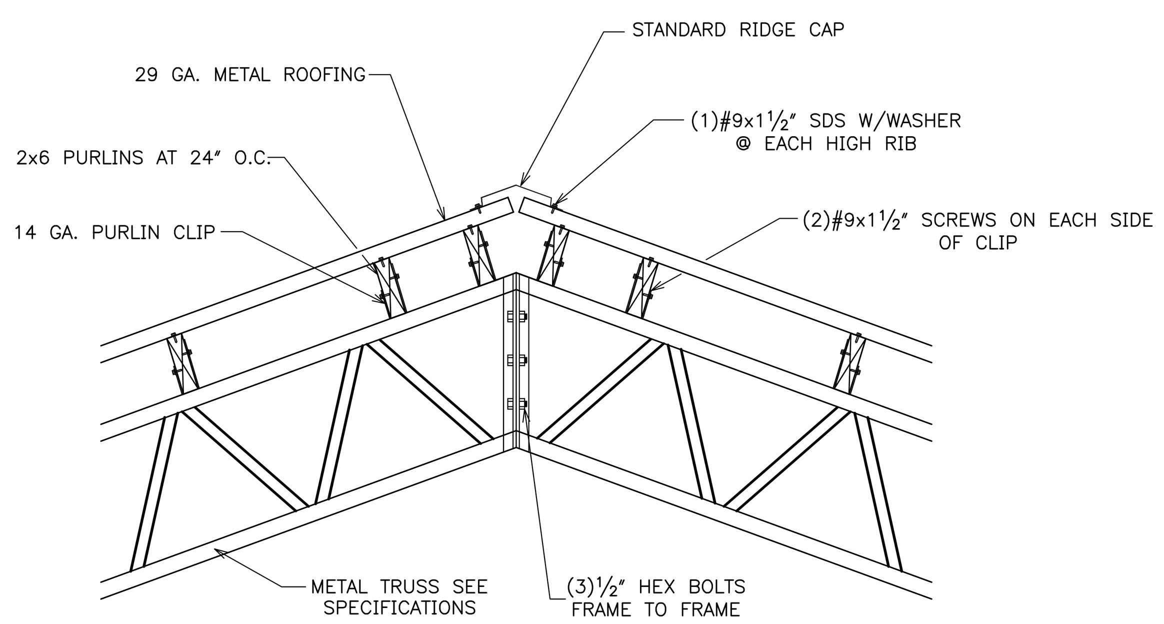

RIDGE DETAIL

SCALE : N.T.S.

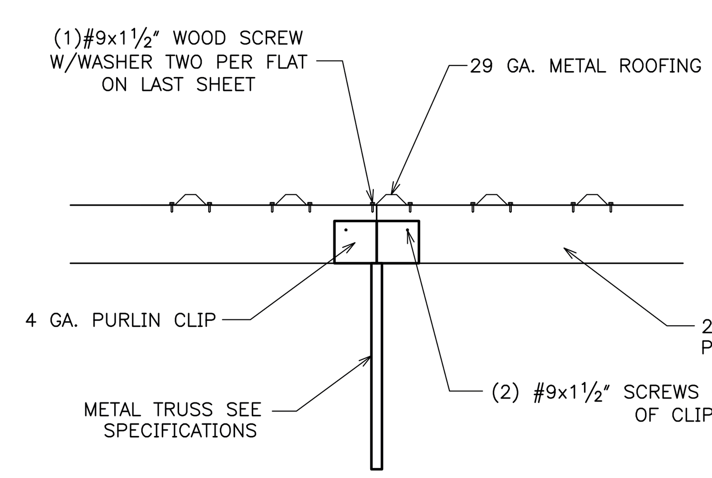

PURLIN CONNECTION

SCALE : N.T.S.

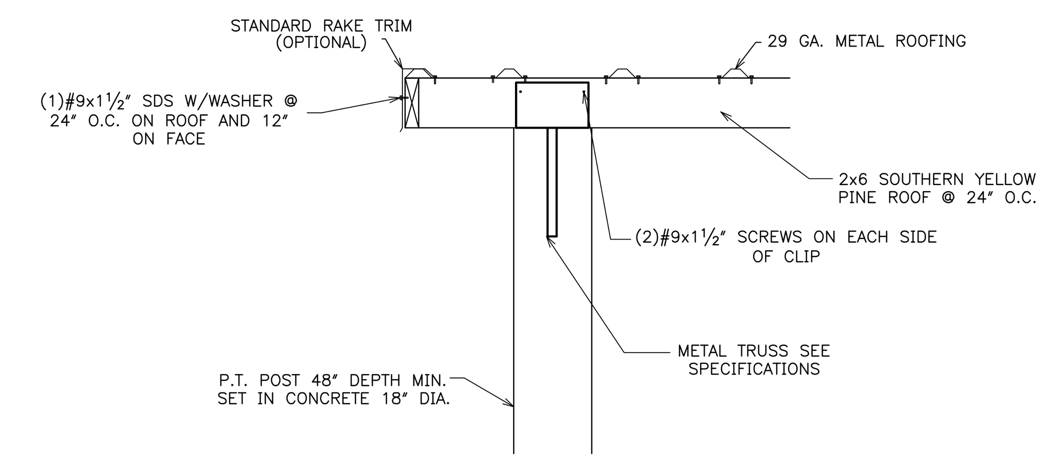

RAKE DETAIL

SCALE : N.T.S.

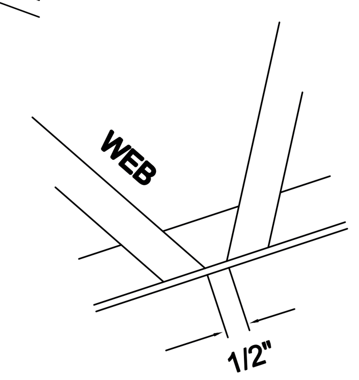

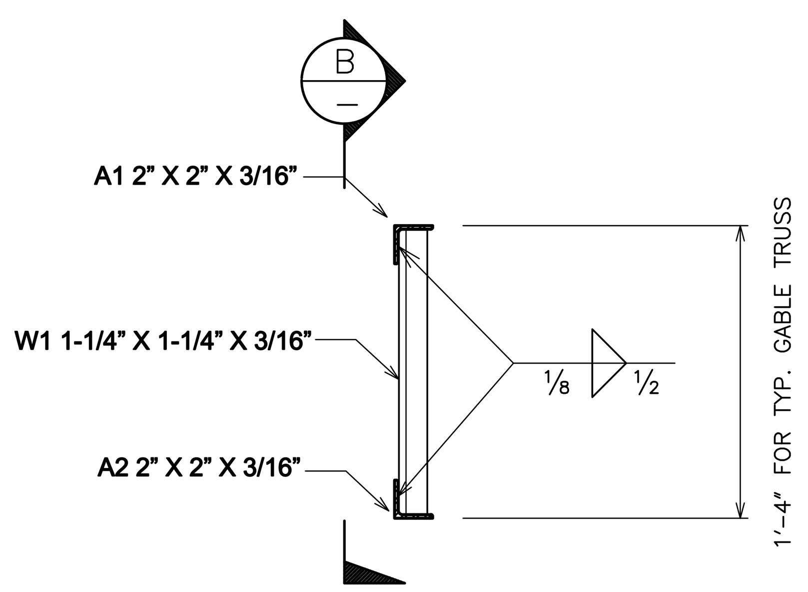

SECTION A

SCALE : N.T.S.

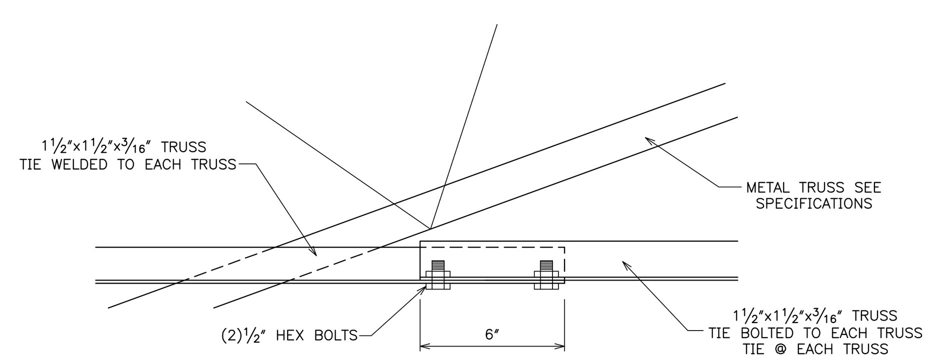

TRUSS TIE CONNECTION

SCALE : N.T.S.

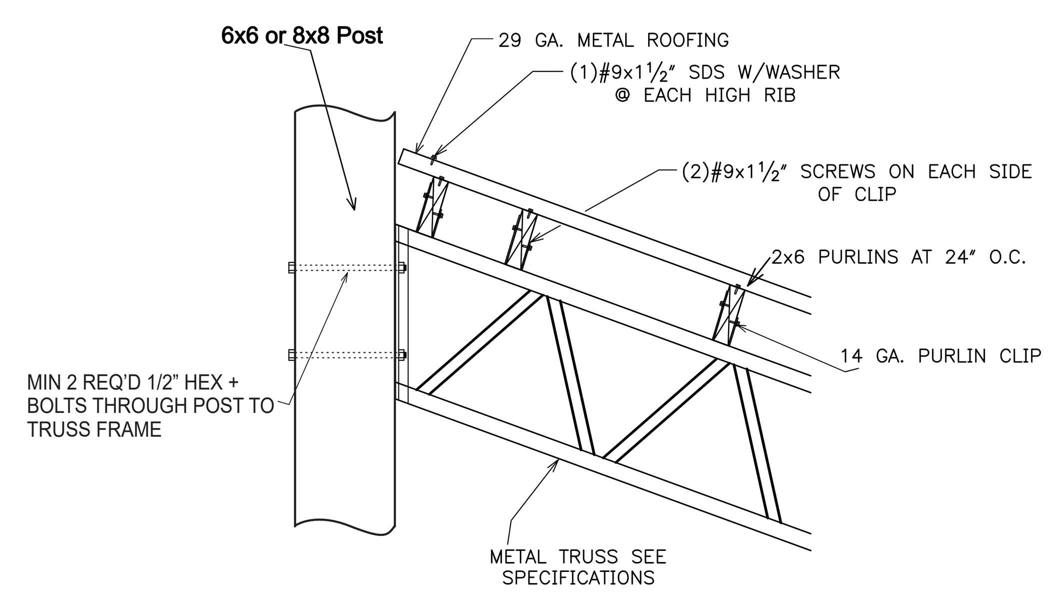

LEAN TO CONNECTION DETAIL

SCALE : N.T.S.

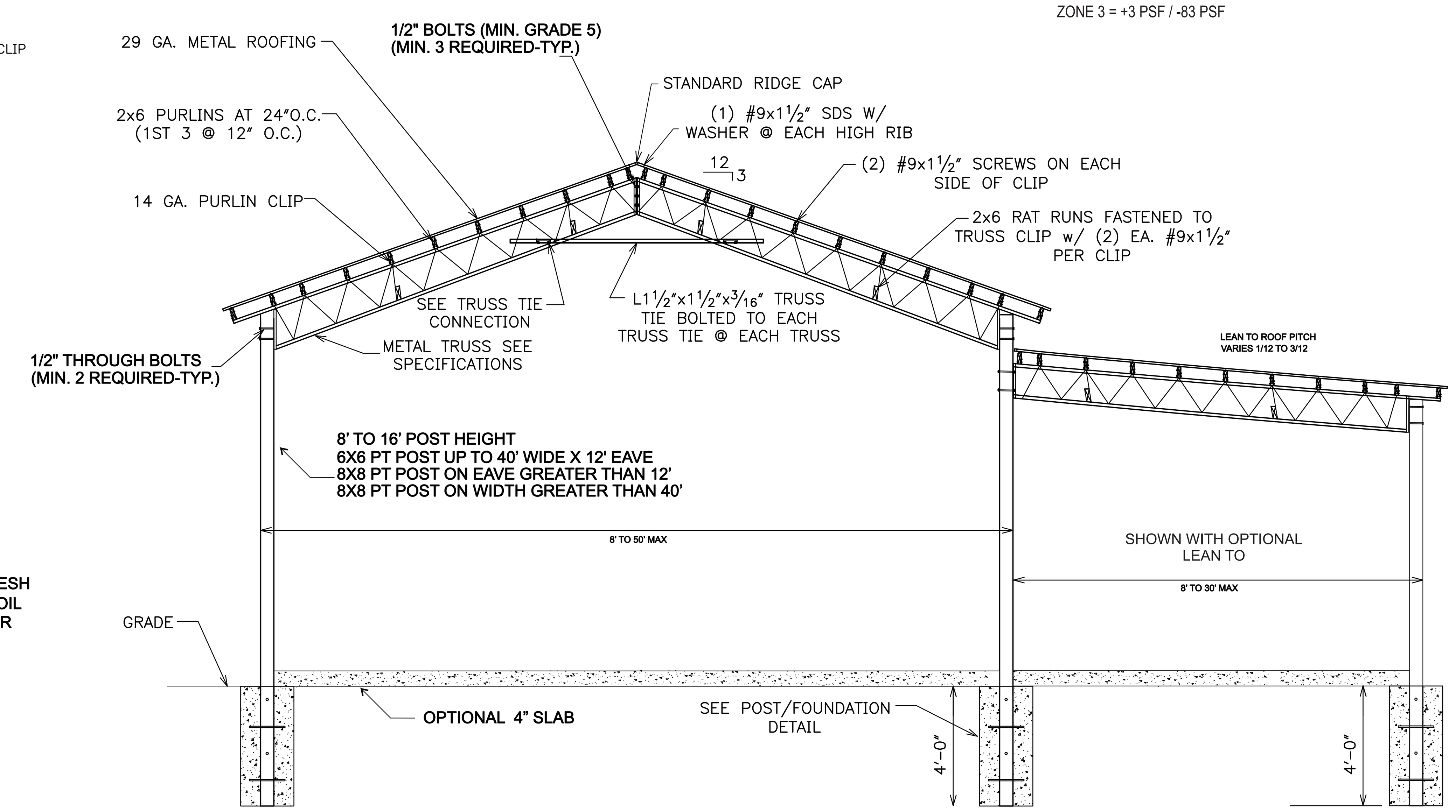

GABLE END VIEW - SHOWN WITH OPTIONAL LEAN TO
LEAN TO OPTION CAN BE ON EITHER OR BOTH SIDES

SCALE: N.T.S.

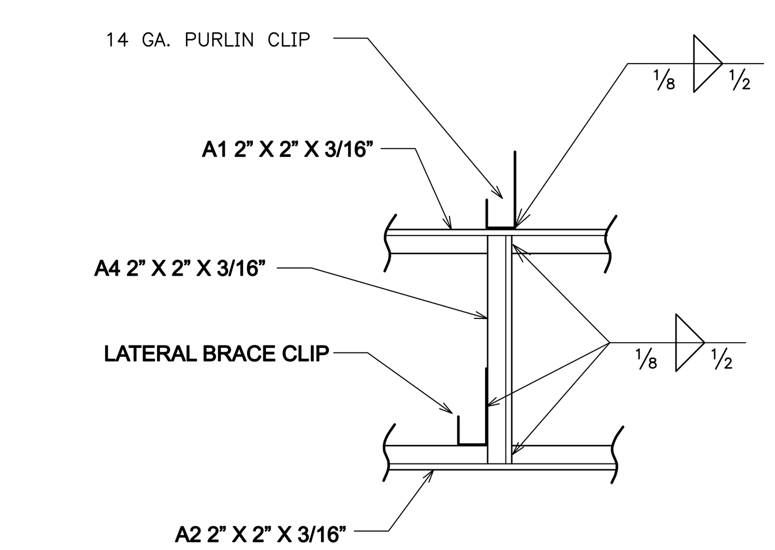

SECTION B

SCALE : N.T.S.

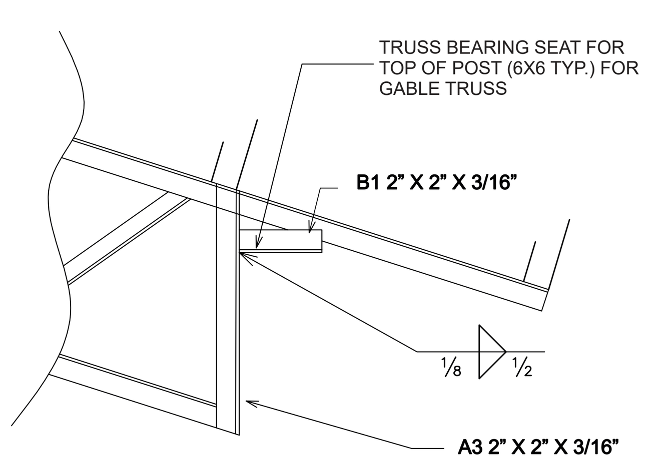

TRUSS SEAT DETAIL

SCALE : N.T.S.

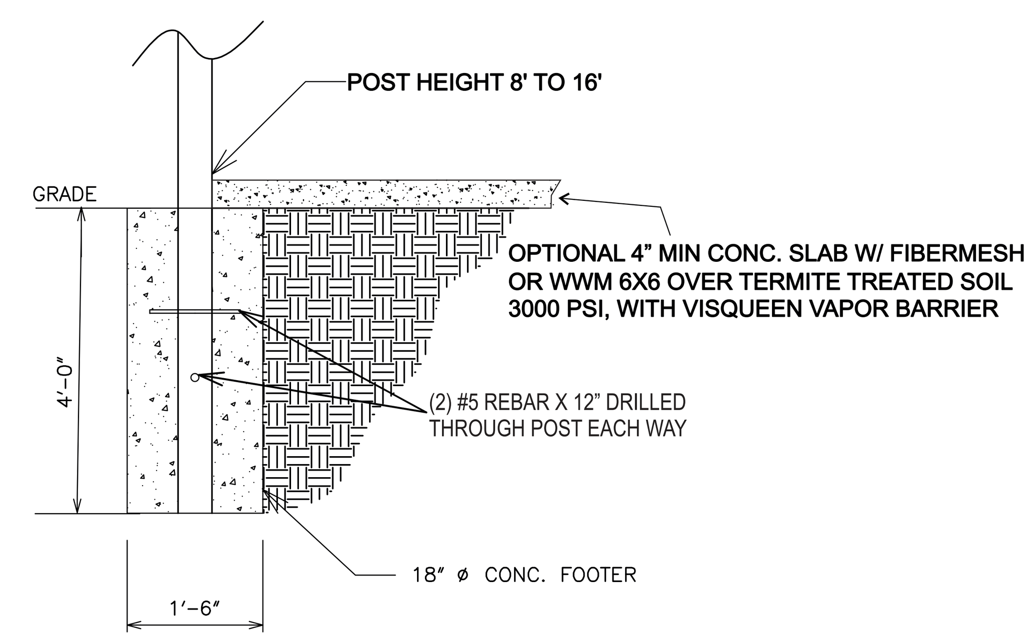

POST/FOUNDATION DETAIL

SCALE : N.T.S.