DATE 10/03/2005

Columbia County Building Permit

This Permit Expires One Year From the Date of Issue

PERMIT
000023684

APPLICANT VIOLET DAVIS PHONE 755-9406

ADDRESS 254 SE HOPPERGRASS GLEN HIGH SPRINGS FL 32643

OWNER GENE CARTER PHONE 755-9406

ADDRESS 775 SW JIM WARD ST FT. WHITE FL 32038

CONTRACTOR DONNIE DAVIS PHONE 454-1407

LOCATION OF PROPERTY TUSTENUGGEE, TL ON JIM WARD, GO .6 MILES ON LEFT, EXISTING MH

TYPE DEVELOPMENT SFD,UTILITY ESTIMATED COST OF CONSTRUCTION 117600.00

HEATED FLOOR AREA 2352.00 TOTAL AREA 3317.00 HEIGHT .00 STORIES 1

FOUNDATION CONC WALLS FRAMED ROOF PITCH 6/12 FLOOR SLAB

LAND USE & ZONING A-3 MAX. HEIGHT 20

Minimum Set Back Requirments: STREET-FRONT 30.00 REAR 25.00 SIDE 25.00

NO. EX.D.U. 1 FLOOD ZONE X DEVELOPMENT PERMIT NO.

PARCEL ID 17-6S-17-09693-004 SUBDIVISION

LOT BLOCK PHASE UNIT TOTAL ACRES

Culvert Permit No.	Culvert Waiver	Contractor's License Number	Applicant/Owner/Contractor
		CBC1251897	D Violet Davis

Driveway Connection	Septic Tank Number	LU & Zoning checked by	Approved for Issuance	New Resident
EXISTING	05-0756-N	BK		N

COMMENTS: ONE FOOT ABOVE THE ROAD, NOC ON FILE

Check # or Cash 163

FOR BUILDING & ZONING DEPARTMENT ONLY

Temporary Power date/app. by Foundation date/app. by Monolithic (footer/Slab) date/app. by

Under slab rough-in plumbing date/app. by Slab date/app. by Sheathing/Nailing date/app. by

Framing date/app. by Rough-in plumbing above slab and below wood floor date/app. by

Electrical rough-in date/app. by Heat & Air Duct date/app. by Peri. beam (Lintel) date/app. by

Permanent power date/app. by C.O. Final date/app. by Culvert date/app. by

M/H tie downs, blocking, electricity and plumbing date/app. by Pool date/app. by

Reconnection date/app. by Pump pole date/app. by Utility Pole date/app. by

M/H Pole date/app. by Travel Trailer date/app. by Re-roof date/app. by

BUILDING PERMIT FEE $ 590.00 CERTIFICATION FEE $ 16.59 SURCHARGE FEE $ 16.59

MISC. FEES $ 0.00 TA ZONING CERT. FEE $ 50.00 FIRE FEE $ .00 WASTE FEE $

FLOOD DEVELOPMENT FEE $ FLOOD ZONE FEE $ 25.00 CULVERT FEE $ **TOTAL FEE** 698.18

INSPECTORS OFFICE Hale Tedder CLERKS OFFICE CH

NOTICE: IN ADDITION TO THE REQUIREMENTS OF THIS PERMIT, THERE MAY BE ADDITIONAL RESTRICTIONS APPLICABLE TO THIS PROPERTY THAT MAY BE FOUND IN THE PUBLIC RECORDS OF THIS COUNTY. AND THERE MAY BE ADDITIONAL PERMITS REQUIRED FROM OTHER GOVERNMENTAL ENTITIES SUCH AS WATER MANAGEMENT DISTRICTS, STATE AGENCIES, OR FEDERAL AGENCIES.

"WARNING TO OWNER: YOUR FAILURE TO RECORD A NOTICE OF COMMENCEMENT MAY RESULT IN YOUR PAYING TWICE FOR IMPROVEMENTS TO YOUR PROPERTY. IF YOU INTEND TO OBTAIN FINANCING, CONSULT WITH YOUR LENDER OR AN ATTORNEY BEFORE RECORDING YOUR NOTICE OF COMMENCEMENT."

This Permit Must Be Prominently Posted on Premises During Construction

PLEASE NOTIFY THE COLUMBIA COUNTY BUILDING DEPARTMENT AT LEAST 24 HOURS IN ADVANCE OF EACH INSPECTION, IN ORDER THAT IT MAY BE MADE WITHOUT DELAY OR INCONVIENCE, PHONE 758-1008. THIS PERMIT IS NOT VALID UNLESS THE WORK AUTHORIZED BY IT IS COMMENCED WITHIN 6 MONTHS AFTER ISSUANCE.

The Issuance of this Permit Does Not Waive Compliance by Permittee with Deed Restrictions.

Columbia County Building Permit Application

Revised 9-2

For Office Use Only Application # 0509-39 Date Received 9/12/05 By JW Permit # 23684

Application Approved by - Zoning Official BLK Date 29.09.05 Plans Examiner OK JTH Date 9-21-05

Flood Zone X Development Permit N/A Zoning A-3 Land Use Plan Map Category A-3

Comments

Existing MH to be removed before CO is Issued Existing well

Applicants Name ~~Gene Edward Carter II~~ Tammy Davis Vidal Stalnaker Phone 755-9406

Address ~~775 SW Jim Ward St. Fort White, FL 32038~~ 254 SE Hoppergrass Cir High Springs FL

Owners Name ~~Same~~ GENE E. Carter Phone Same

911 Address ~~Same~~ 775 SW Jim Ward St. Fort White, FL 32038

Contractors Name Donnie Davis Phone

Address 254 SE Hoppergrass Glen High Springs, FL 32643

Fee Simple Owner Name & Address

Bonding Co. Name & Address None

Architect/Engineer Name & Address Mark Disosway P.E. PO Box 868 Lake City, FL 32056

Mortgage Lenders Name & Address None

Circle the correct power company - FL Power & Light - (Clay Elec.) - Suwannee Valley Elec. - Progressive Energy

Property ID Number R09693-004 17-6S-17 Estimated Cost of Construction $200,000

Subdivision Name N/A Lot ____ Block ____ Unit ____ Phase ____

Driving Directions From Lake City, take 131 (Tustenuggee) South to SW Jim Ward Street (county grade). Turn left (East) on Jim Ward and go .6 miles. We are on the left hand side.

Type of Construction SFD Number of Existing Dwellings on Property 1

Total Acreage 15.27 Lot Size 15 Do you need a - Culvert Permit or Culvert Waiver or (Have an Existing Drive)

Actual Distance of Structure from Property Lines - Front 270' Side 349' Side 587' Rear 328'

Total Building Height 20'5" Number of Stories 1 Heated Floor Area 2352 Roof Pitch 6/12

Porches 482 CARPORT 482 TOTAL 3317

Application is hereby made to obtain a permit to do work and installations as indicated. I certify that no work or installation has commenced prior to the issuance of a permit and that all work be performed to meet the standards of all laws regulating construction in this jurisdiction.

OWNERS AFFIDAVIT: I hereby certify that all the foregoing information is accurate and all work will be done in compliance with all applicable laws and regulating construction and zoning.

WARNING TO OWNER: YOUR FAILURE TO RECORD A NOTICE OF COMMENCEMENT MAY RESULT IN YOU PAYING TWICE FOR IMPROVEMENTS TO YOUR PROPERTY. IF YOU INTEND TO OBTAIN FINANCING, CONSULT WITH YOUR LENDER OR ATTORNEY BEFORE RECORDING YOUR NOTICE OF COMMENCEMENT.

Owner Builder or Agent (Including Contractor)

Contractor Signature

Contractors License Number CBC1251897

Competency Card Number

NOTARY STAMP/SEAL

STATE OF FLORIDA
COUNTY OF COLUMBIA

Sworn to (or affirmed) and subscribed before me this 12th day of September 2005.

Personally known X or Produced Identification ____

Notary Signature

Gene E. Carter
MY COMMISSION # DD056906 EXPIRES November 6, 2005
BONDED THRU TROY FAIN INSURANCE, INC.

Ck list

COLUMBIA COUNTY BUILDING DEPARTMENT
CHECKLIST FOR PERMITTING

Application #_____

✓ **Notarized completed Building Permit Application**
Notes:

N/A **If an Owner Builder, signed Disclosure Statement**
Notes:

✓ **Recorded Deed or a Notarized Affidavit (form from the Building Dept.)**
Notes:

N/A **Approved and Signed Site Plan from Environmental Health on the septic**
Notes:

✓ **Site plan with actual distances of the structure to each property line**
Notes:

✓ **911 Address form, Contact 386.752.8787 for an appointment**
Notes:

✓ **Residential or Commercial Checklist completed**
Notes:

✓ **Driving directions including all road names**
Notes:

✓ **Well information (on plans or letter from the well driller)**
Notes: existing

✓ **Before the 1st inspection Recorded Notice of Commencement signed by owner**
Notes: NOT RECORDED

✓ **2 sets of plans (blueprints)**
Notes:

✓ **2 sets of sealed truss engineering**
Notes:

✓ **2 sets of energy code & manual J**
Notes:

✓ **2 sets of engineering packets including specs on windows, doors, roof and etc.**
Notes:

NOTICE OF COMMENCEMENT FORM
COLUMBIA COUNTY, FLORIDA

******THIS DOCUMENT MUST BE RECORDED AT THE COUNTY CLERKS OFFICE BEFORE YOUR FIRST INSPECTION.******

THE UNDERSIGNED hereby gives notice that improvement will be made to certain real property, and in accordance with Chapter 713, Florida Statutes, the following information is provided in this Notice of Commencement.

Tax Parcel ID Number R09693-004

1. **Description of property: (legal description of the property and street address or 911 address)**
   • 775 S.W. Jim Ward St. Fort White, FL 32038
   • See tax bill for legal description

2. **General description of improvement:** New frame house

3. **Owner Name & Address** Gene Edward Carter II & Kimberly Phillips Carter
   775 S.W. Jim Ward St. Fort White, FL 32038 **Interest in Property** Owners

4. **Name & Address of Fee Simple Owner (if other than owner):** N/A

5. **Contractor Name** Donnie Davis / High Springs Const **Phone Number** 386-454-3387 or 1407
   Address 254 SE Hoppergrass Glen High Springs, FL 32643

6. **Surety Holders Name** None
   Address
   Amount of Bond

Inst:2005022171 Date:09/12/2005 Time:12:10
YMK DC,P.DeWitt Cason,Columbia County B:1057 P:2528

7. **Lender Name** None
   Address

8. **Persons within the State of Florida designated by the Owner upon whom notices or other documents may be served as provided by section 718.13 (1)(a) 7; Florida Statutes:**
   Name — **Phone Number**
   Address

9. **In addition to himself/herself the owner designates** — **of** _____ **to receive a copy of the Lienor's Notice as provided in Section 713.13 (1) – (a) 7. Phone Number of the designee**

10. **Expiration date of the Notice of Commencement (the expiration date is 1 (one) year from the date of recording, (Unless a different date is specified)**

NOTICE AS PER CHAPTER 713, Florida Statutes:
The owner must sign the notice of commencement and no one else may be permitted to sign in his/her stead.

Gene Edward Carter II
Signature of Owner

Sworn to (or affirmed) and subscribed before day of September 12, **, 2005**

NOTARY STAMP/SEAL Gene E. Carter
MY COMMISSION # DD056906 EXPIRES
November 6, 2005
BONDED THRU TROY FAIN INSURANCE, INC.

Gene E. Carter
Signature of Notary

RONNIE BRANNON
COLUMBIA COUNTY TAX COLLECTOR

FIRST INSTALLMENT (JUNE) 2005 126761.0000

NOTICE OF AD VALOREM TAXES AND NON-AD VALOREM ASSESSMENTS

ACCOUNT NUMBER	ESCROW CD	ASSESSED VALUE	EXEMPTIONS	TAXABLE VALUE	MILLAGE CODE
R09693-004	999	40,123	25,000	15,123	003

RETAIN THIS PORTION

CARTER GENE EDWARD II &
KIMBERLY L PHILLIPS CARTER
775 SW JIM WARD ST
FT WHITE FL 32038

17-6S-17 0200/0200 15.27 Acres
BEG AT SW COR OF SE1/4, RUN E
982.86 FT, N 656.53 FT, W
325.93 FT, N 15.80 FT, W
657.49 FT, S 676.03 FT TO POB,
EX RD R/W OFFLS SIDE. (A PART
See Additional Legal on Tax Roll

PAY IN U.S. FUNDS TO RONNIE BRANNON TAX COLLECTOR · 135 NE HERNANDO AVE. — SUITE 125, LAKE CITY, FL 32055-4006

2004 Gross	Gross	Discount	If Paid By	Jun 30 2005	Jul 31 2005
504.56	126.14	7.57	Please Pay	118.57	132.44

0000000000 0000012614 0000001267610000 5101 6

STATE OF FLORIDA
DEPARTMENT OF HEALTH

APPLICATION FOR ONSITE SEWAGE DISPOSAL SYSTEM CONSTRUCTION PERMIT

Permit Application Number 05-0756N

PART II - SITE PLAN

Scale: Each block represents 5 feet and 1 inch = 50 feet.

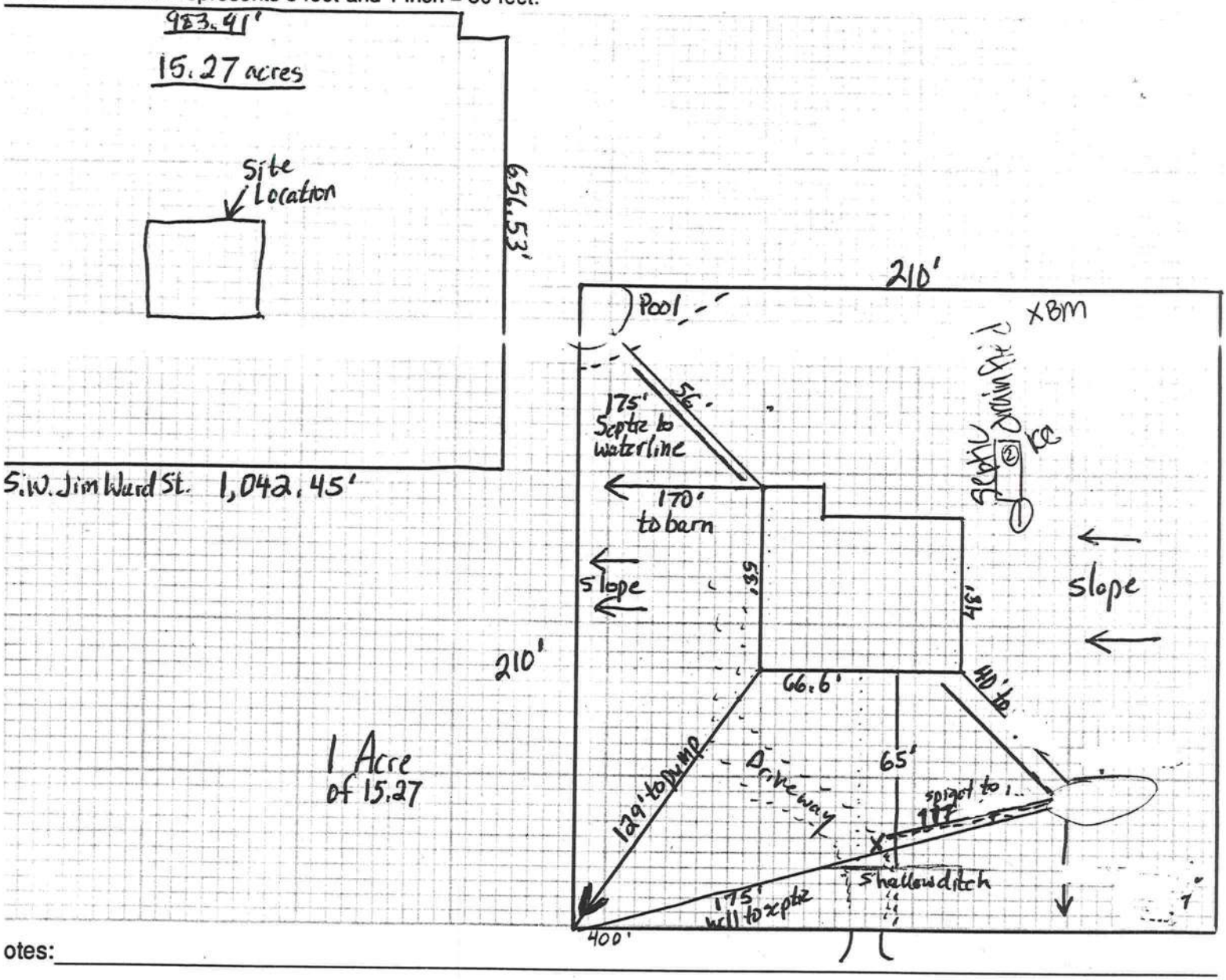

Notes:

Site Plan submitted by: X Dave Edwards Sr. (Signature) OWNER (Title)

Plan Approved ✓ Not Approved ____ Date 7-29-05

Sallie Gladdy EHI COLUMBIA — County Health Department

ALL CHANGES MUST BE APPROVED BY THE COUNTY HEALTH DEPARTMENT

ED & KIM LARTER
SITE PLAN

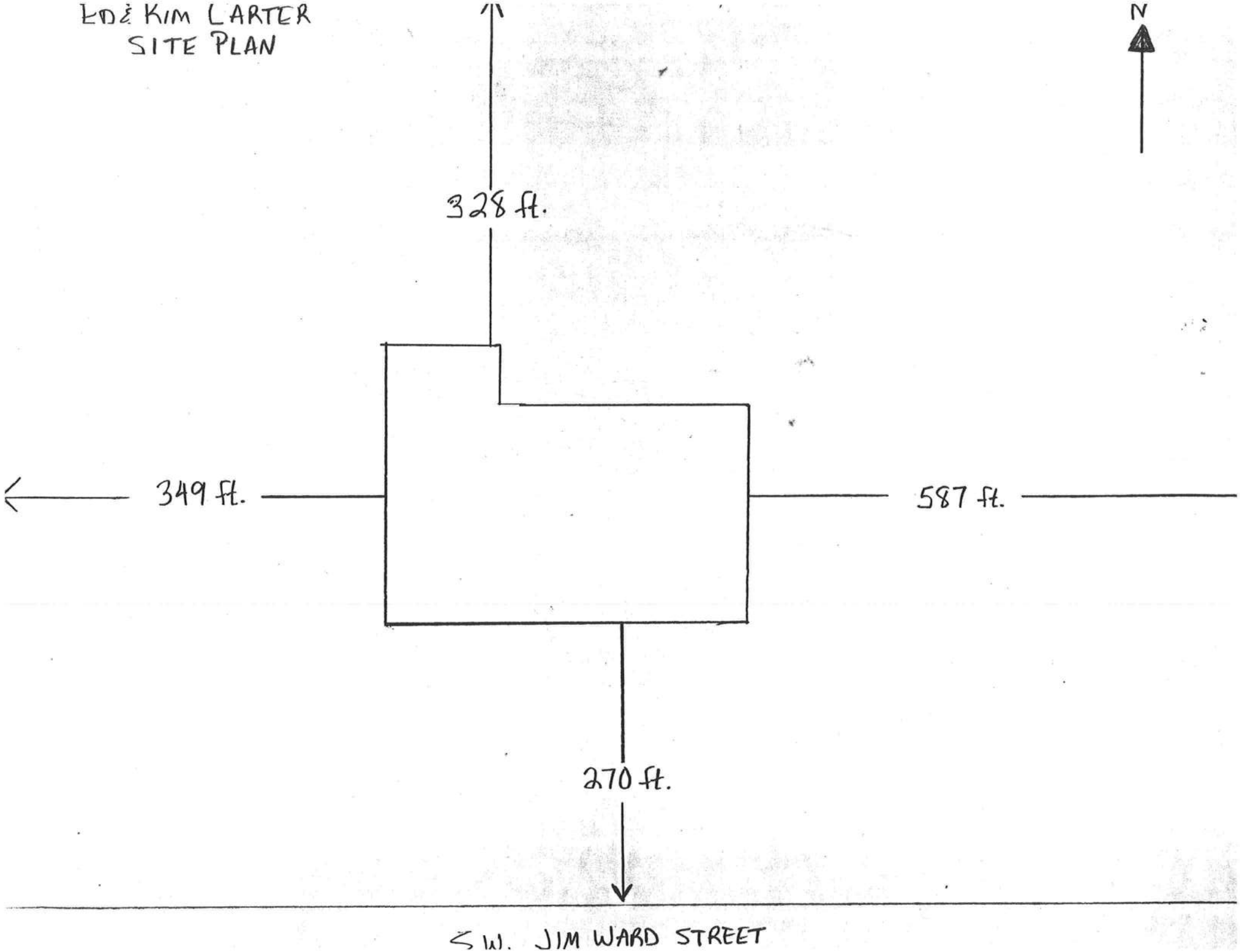

FLORIDA ENERGY EFFICIENCY CODE FOR BUILDING CONSTRUCTION

Florida Department of Community Affairs

Residential Whole Building Performance Method A

Project Name:	**Carter- Ed and Kim Carter Res.**	Builder:	
Address:		Permitting Office:	
City, State:	,	Permit Number:	23684
Owner:	**Ed and Kim Carter**	Jurisdiction Number:	221000
Climate Zone:	**North**		

1. New construction or existing		New	
2. Single family or multi-family		Single family	
3. Number of units, if multi-family		1	
4. Number of Bedrooms		3	
5. Is this a worst case?		Yes	
6. Conditioned floor area (ft²)		2352 ft²	
7. Glass area & type	Single Pane	Double Pane	
a. Clear glass, default U-factor	0.0 ft²	312.0 ft²	
b. Default tint, default U-factor	0.0 ft²	0.0 ft²	
c. Labeled U-factor or SHGC	0.0 ft²	0.0 ft²	
8. Floor types			
a. Slab-On-Grade Edge Insulation		R=0.0, 213.0(p) ft	
b. N/A			
c. N/A			
9. Wall types			
a. Frame, Wood, Exterior		R=20.0, 1763.0 ft²	
b. N/A			
c. N/A			
d. N/A			
e. N/A			
10. Ceiling types			
a. Under Attic		R=30.0, 1453.0 ft²	
b. Under Attic		R=30.0, 953.0 ft²	
c. Under Attic		R=19.0, 84.0 ft²	
11. Ducts			
a. Sup: Unc. Ret: Unc. AH: Interior		Sup. R=6.0, 210.0 ft	
b. N/A			

12. Cooling systems		
a. Central Unit	Cap: 48.0 kBtu/hr	
	SEER: 12.00	
b. N/A		
c. N/A		
13. Heating systems		
a. Electric Heat Pump	Cap: 48.0 kBtu/hr	
	HSPF: 8.20	
b. N/A		
c. N/A		
14. Hot water systems		
a. Natural Gas	Cap: 1.0 gallons	
	EF: 0.82	
b. N/A		
c. Conservation credits (HR-Heat recovery, Solar DHP-Dedicated heat pump)		
15. HVAC credits (CF-Ceiling fan, CV-Cross ventilation, HF-Whole house fan, PT-Programmable Thermostat, MZ-C-Multizone cooling, MZ-H-Multizone heating)		

Glass/Floor Area: 0.13

Total as-built points: 22778
Total base points: 33194

PASS

I hereby certify that the plans and specifications covered by this calculation are in compliance with the Florida Energy Code.

PREPARED BY: Gale Insulation

DATE: 8/18/05

I hereby certify that this building, as designed, is in compliance with the Florida Energy Code.

OWNER/AGENT: _____

DATE: _____

Review of the plans and specifications covered by this calculation indicates compliance with the Florida Energy Code. Before construction is completed this building will be inspected for compliance with Section 553.908 Florida Statutes.

GREAT SEAL OF THE STATE OF FLORIDA — IN GOD WE TRUST

BUILDING OFFICIAL: _____

DATE: _____

SUMMER CALCULATIONS

Residential Whole Building Performance Method A - Details

ADDRESS: , , , PERMIT #:

BASE

GLASS TYPES

.18 X	Conditioned Floor Area	X BSPM	= Points
.18	2352.0	20.04	8484.1

WALL TYPES	Area	X BSPM	= Points
Adjacent	0.0	0.00	0.0
Exterior	1763.0	1.70	2997.1
Base Total:	**1763.0**		**2997.1**

DOOR TYPES	Area	X BSPM	= Points
Adjacent	0.0	0.00	0.0
Exterior	60.0	6.10	366.0
Base Total:	**60.0**		**366.0**

CEILING TYPES	Area	X BSPM	= Points
Under Attic	2352.0	1.73	4069.0
Base Total:	**2352.0**		**4069.0**

FLOOR TYPES	Area	X BSPM	= Points
Slab	213.0(p)	-37.0	-7881.0
Raised	0.0	0.00	0.0
Base Total:			**-7881.0**

INFILTRATION	Area	X BSPM	= Points
	2352.0	10.21	24013.9

AS-BUILT

Type/SC	Overhang Ornt	Len	Hgt	Area	X SPM	X SOF	= Points
Double, Clear	W	0.0	0.0	111.0	38.52	1.00	4276.2
Double, Clear	N	0.0	0.0	82.0	19.20	1.00	1574.4
Double, Clear	E	0.0	0.0	95.0	42.06	1.00	3996.1
Double, Clear	S	0.0	0.0	24.0	35.87	1.00	860.8
As-Built Total:				**312.0**			**10707.4**

Type	R-Value	Area	X SPM	= Points
Frame, Wood, Exterior	20.0	1763.0	0.86	1511.1
As-Built Total:		**1763.0**		**1511.1**

Type	Area	X SPM	= Points
Exterior Insulated	60.0	4.10	246.0
As-Built Total:	**60.0**		**246.0**

Type	R-Value	Area	X SPM X SCM	= Points
Under Attic	30.0	1453.0	1.73 X 1.00	2513.7
Under Attic	30.0	953.0	1.73 X 1.00	1648.7
Under Attic	19.0	84.0	2.34 X 1.00	196.6
As-Built Total:		**2490.0**		**4358.9**

Type	R-Value	Area	X SPM	= Points
Slab-On-Grade Edge Insulation	0.0	213.0(p	-41.20	-8775.6
As-Built Total:		**213.0**		**-8775.6**

Area	X SPM	= Points
2352.0	10.21	24013.9

SUMMER CALCULATIONS

Residential Whole Building Performance Method A - Details

ADDRESS: , , ,	PERMIT #:

BASE				AS-BUILT							
Summer Base Points:			**32049.1**	**Summer As-Built Points:**							**32061.8**
Total Summer Points	X System Multiplier	=	Cooling Points	Total Component	X Cap Ratio	X Duct Multiplier (DM x DSM x AHU)	X System Multiplier	X Credit Multiplier	=	Cooling Points	
32049.1	**0.4266**		**13672.2**	32061.8 **32061.8**	1.000 **1.00**	(1.090 x 1.147 x 0.91) **1.138**	0.284 **0.284**	1.000 **1.000**		10374.7 **10374.7**	

WINTER CALCULATIONS

Residential Whole Building Performance Method A - Details

ADDRESS: , , , PERMIT #:

BASE

GLASS TYPES .18 X Conditioned Floor Area	X BWPM	= Points
.18 2352.0	12.74	5393.6

WALL TYPES	Area	X BWPM	= Points
Adjacent	0.0	0.00	0.0
Exterior	1763.0	3.70	6523.1
Base Total:	**1763.0**		**6523.1**

DOOR TYPES	Area	X BWPM	= Points
Adjacent	0.0	0.00	0.0
Exterior	60.0	12.30	738.0
Base Total:	**60.0**		**738.0**

CEILING TYPES	Area	X BWPM	= Points
Under Attic	2352.0	2.05	4821.6
Base Total:	**2352.0**		**4821.6**

FLOOR TYPES	Area	X BWPM	= Points
Slab	213.0(p)	8.9	1895.7
Raised	0.0	0.00	0.0
Base Total:			**1895.7**

INFILTRATION	Area	X BWPM	= Points
	2352.0	-0.59	-1387.7

AS-BUILT

Type/SC	Overhang Ornt	Len	Hgt	Area	X WPM	X WOF	= Points
Double, Clear	W	0.0	0.0	111.0	20.73	1.00	2300.8
Double, Clear	N	0.0	0.0	82.0	24.58	1.00	2015.4
Double, Clear	E	0.0	0.0	95.0	18.79	1.00	1785.4
Double, Clear	S	0.0	0.0	24.0	13.30	1.00	319.1
As-Built Total:				**312.0**			**6420.7**

Type	R-Value	Area	X WPM	= Points
Frame, Wood, Exterior	20.0	1763.0	2.10	3702.3
As-Built Total:		**1763.0**		**3702.3**

Type	Area	X WPM	= Points
Exterior Insulated	60.0	8.40	504.0
As-Built Total:	**60.0**		**504.0**

Type	R-Value	Area	X WPM X WCM	= Points
Under Attic	30.0	1453.0	2.05 X 1.00	2978.6
Under Attic	30.0	953.0	2.05 X 1.00	1953.6
Under Attic	19.0	84.0	2.70 X 1.00	226.8
As-Built Total:		**2490.0**		**5159.1**

Type	R-Value	Area	X WPM	= Points
Slab-On-Grade Edge Insulation	0.0	213.0(p	18.80	4004.4
As-Built Total:		**213.0**		**4004.4**

Area	X WPM	= Points
2352.0	-0.59	-1387.7

WINTER CALCULATIONS

Residential Whole Building Performance Method A - Details

ADDRESS: , , ,	PERMIT #:

BASE				AS-BUILT							
Winter Base Points:			**17984.3**	**Winter As-Built Points:**							**18402.8**
Total Winter Points	X System Multiplier	= Heating Points		Total Component	X Cap Ratio	X Duct Multiplier (DM x DSM x AHU)	X System Multiplier	X Credit Multiplier	= Heating Points		
17984.3	**0.6274**	**11283.4**		18402.8 **18402.8**	1.000 **1.00**	(1.069 x 1.169 x 0.93) **1.162**	0.416 **0.416**	1.000 **1.000**	8894.0 **8894.0**		

WATER HEATING & CODE COMPLIANCE STATUS

Residential Whole Building Performance Method A - Details

ADDRESS: , , ,	PERMIT #:

BASE					AS-BUILT								
WATER HEATING													
Number of Bedrooms	X	Multiplier	=	Total	Tank Volume	EF	Number of Bedrooms	X	Tank Ratio	X	Multiplier	X	Credit Multiplier	=	Total
3		2746.00		8238.0	1.0	0.82	3		1.00		1169.93		1.00		3509.8
					As-Built Total:										**3509.8**

CODE COMPLIANCE STATUS

BASE							AS-BUILT						
Cooling Points	+	Heating Points	+	Hot Water Points	=	Total Points	Cooling Points	+	Heating Points	+	Hot Water Points	=	Total Points
13672		**11283**		**8238**		**33194**	**10375**		**8894**		**3510**		**22778**

PASS

Code Compliance Checklist

Residential Whole Building Performance Method A - Details

ADDRESS: , , , PERMIT #:

6A-21 INFILTRATION REDUCTION COMPLIANCE CHECKLIST

COMPONENTS	SECTION	REQUIREMENTS FOR EACH PRACTICE	CHECK
Exterior Windows & Doors	606.1.ABC.1.1	Maximum:.3 cfm/sq.ft. window area; .5 cfm/sq.ft. door area.	
Exterior & Adjacent Walls	606.1.ABC.1.2.1	Caulk, gasket, weatherstrip or seal between: windows/doors & frames, surrounding wall; foundation & wall sole or sill plate; joints between exterior wall panels at corners; utility penetrations; between wall panels & top/bottom plates; between walls and floor. EXCEPTION: Frame walls where a continuous infiltration barrier is installed that extends from, and is sealed to, the foundation to the top plate.	
Floors	606.1.ABC.1.2.2	Penetrations/openings >1/8" sealed unless backed by truss or joint members. EXCEPTION: Frame floors where a continuous infiltration barrier is installed that is sealed to the perimeter, penetrations and seams.	
Ceilings	606.1.ABC.1.2.3	Between walls & ceilings; penetrations of ceiling plane of top floor; around shafts, chases, soffits, chimneys, cabinets sealed to continuous air barrier; gaps in gyp board & top plate; attic access. EXCEPTION: Frame ceilings where a continuous infiltration barrier is installed that is sealed at the perimeter, at penetrations and seams.	
Recessed Lighting Fixtures	606.1.ABC.1.2.4	Type IC rated with no penetrations, sealed; or Type IC or non-IC rated, installed inside a sealed box with 1/2" clearance & 3" from insulation; or Type IC rated with < 2.0 cfm from conditioned space, tested.	
Multi-story Houses	606.1.ABC.1.2.5	Air barrier on perimeter of floor cavity between floors.	
Additional Infiltration reqts	606.1.ABC.1.3	Exhaust fans vented to outdoors, dampers; combustion space heaters comply with NFPA, have combustion air.	

6A-22 OTHER PRESCRIPTIVE MEASURES (must be met or exceeded by all residences.)

COMPONENTS	SECTION	REQUIREMENTS	CHECK
Water Heaters	612.1	Comply with efficiency requirements in Table 6-12. Switch or clearly marked circuit breaker (electric) or cutoff (gas) must be provided. External or built-in heat trap required.	
Swimming Pools & Spas	612.1	Spas & heated pools must have covers (except solar heated). Non-commercial pools must have a pump timer. Gas spa & pool heaters must have a minimum thermal efficiency of 78%.	
Shower heads	612.1	Water flow must be restricted to no more than 2.5 gallons per minute at 80 PSIG.	
Air Distribution Systems	610.1	All ducts, fittings, mechanical equipment and plenum chambers shall be mechanically attached, sealed, insulated, and installed in accordance with the criteria of Section 610. Ducts in unconditioned attics: R-6 min. insulation.	
HVAC Controls	607.1	Separate readily accessible manual or automatic thermostat for each system.	
Insulation	604.1, 602.1	Ceilings-Min. R-19. Common walls-Frame R-11 or CBS R-3 both sides. Common ceiling & floors R-11.	

ENERGY PERFORMANCE LEVEL (EPL) DISPLAY CARD

ESTIMATED ENERGY PERFORMANCE SCORE* = 87.3

The higher the score, the more efficient the home.

Ed and Kim Carter, , , ,

1. New construction or existing		New	
2. Single family or multi-family		Single family	
3. Number of units, if multi-family		1	
4. Number of Bedrooms		3	
5. Is this a worst case?		Yes	
6. Conditioned floor area (ft²)		2352 ft²	
7. Glass area & type	Single Pane	Double Pane	
a. Clear glass, default U-factor	0.0 ft²	312.0 ft²	
b. Default tint, default U-factor	0.0 ft²	0.0 ft²	
c. Labeled U-factor or SHGC	0.0 ft²	0.0 ft²	
8. Floor types			
a. Slab-On-Grade Edge Insulation		R=0.0, 213.0(p) ft	
b. N/A			
c. N/A			
9. Wall types			
a. Frame, Wood, Exterior		R=20.0, 1763.0 ft²	
b. N/A			
c. N/A			
d. N/A			
e. N/A			
10. Ceiling types			
a. Under Attic		R=30.0, 1453.0 ft²	
b. Under Attic		R=30.0, 953.0 ft²	
c. Under Attic		R=19.0, 84.0 ft²	
11. Ducts			
a. Sup: Unc. Ret: Unc. AH: Interior		Sup. R=6.0, 210.0 ft	
b. N/A			

12. Cooling systems		
a. Central Unit	Cap: 48.0 kBtu/hr	
	SEER: 12.00	
b. N/A		
c. N/A		
13. Heating systems		
a. Electric Heat Pump	Cap: 48.0 kBtu/hr	
	HSPF: 8.20	
b. N/A		
c. N/A		
14. Hot water systems		
a. Natural Gas	Cap: 1.0 gallons	
	EF: 0.82	
b. N/A		
c. Conservation credits (HR-Heat recovery, Solar DHP-Dedicated heat pump)		
15. HVAC credits (CF-Ceiling fan, CV-Cross ventilation, HF-Whole house fan, PT-Programmable Thermostat, MZ-C-Multizone cooling, MZ-H-Multizone heating)		

I certify that this home has complied with the Florida Energy Efficiency Code For Building Construction through the above energy saving features which will be installed (or exceeded) in this home before final inspection. Otherwise, a new EPL Display Card will be completed based on installed Code compliant features.

Builder Signature: _____ Date: _____

Address of New Home: _____ City/FL Zip: _____

**NOTE: The home's estimated energy performance score is only available through the FLA/RES computer program. This is not a Building Energy Rating. If your score is 80 or greater (or 86 for a US EPA/DOE EnergyStar™ designation), your home may qualify for energy efficiency mortgage (EEM) incentives if you obtain a Florida Energy Gauge Rating. Contact the Energy Gauge Hotline at 321/638-1492 or see the Energy Gauge web site at www.fsec.ucf.edu for information and a list of certified Raters. For information about Florida's Energy Efficiency Code For Building Construction, contact the Department of Community Affairs at 850/487-1824.*

From: The Columbia County Building Department
Plans Review
135 NE Hernando Av.
P. O Box 1529
Lake City Florida, 32056-1529

Reference to: Build permit application Number: **0509-39 Donnie Davis**
Owner Gene Carter 775 SW Jim Ward St.
On the date of September 16, 2005 application 0509-39 and plans for construction of a single family dwelling were reviewed and the following information or alteration to the plans will be required to continue processing this application. If you should have any question please contact the above address, or contact phone number (386) 758-1163 or fax any information to (386) 754-7088.

Please include application number 0509-39 when making reference to this application.

1. Please submit the approval of products by The Florida Building Commission for use in the exterior shear walls and roof system: Roofing Products; (metal roofing material)

Received 9-19

2. Verify on the electrical plans the location of the smoke alarms.

A. In each sleeping room.

B. Outside each separate sleeping area in the immediate vicinity of the bedrooms.

When more than one smoke alarm is required to be installed within an individual dwelling unit the alarm devices shall be interconnected in such a manner that the actuation of one alarm will activate all of the alarms in the individual unit. The alarm shall be clearly audible in all bedrooms over background noise levels with all intervening doors closed.

3. Make a note on the electrical plans that all bedrooms circuits shall have arc fault circuits (AFCI) protection.

Thank you,

Joe Haltiwanger
Plan Examiner
Columbia County Building Department

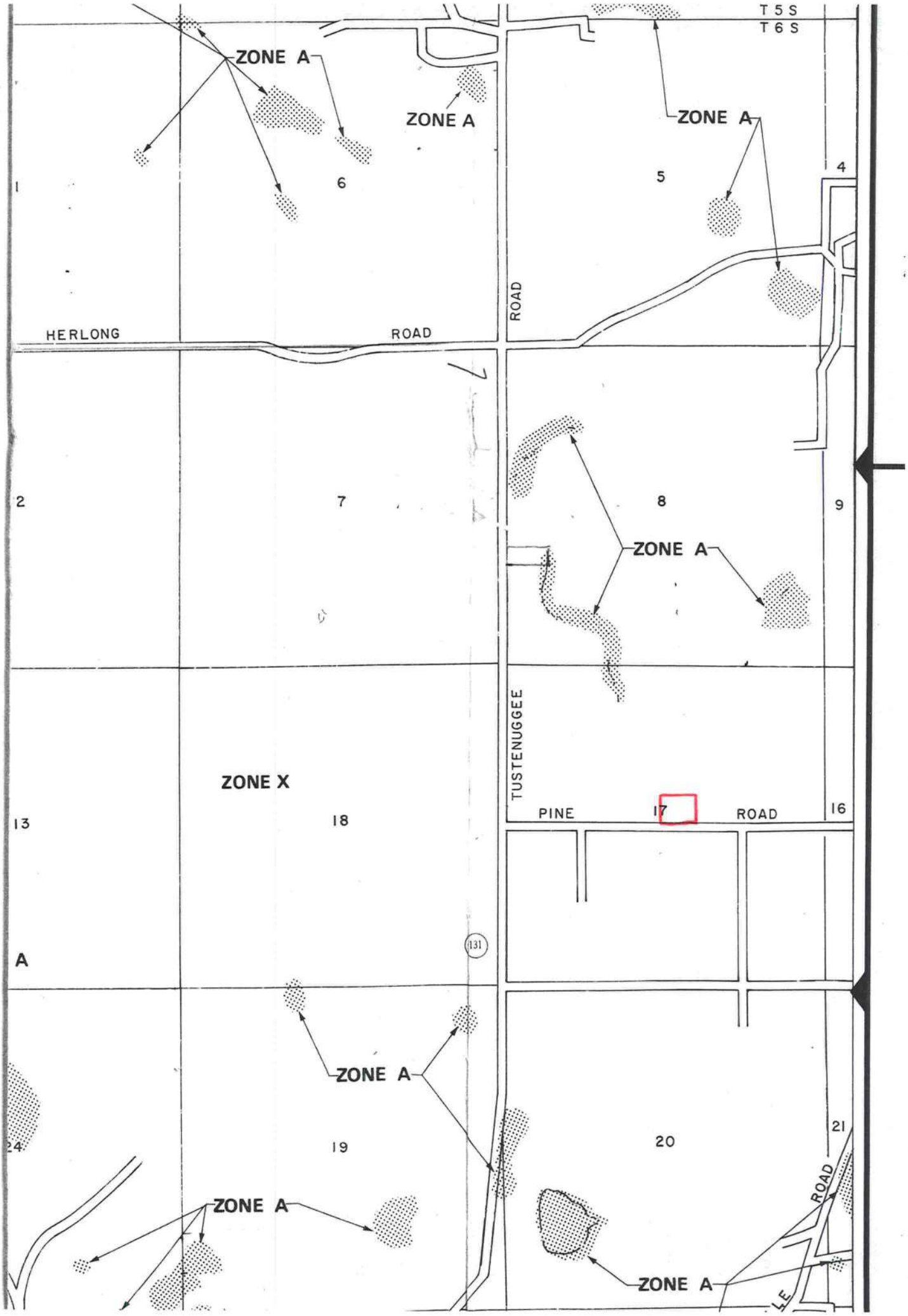
T 5 S
T 6 S
ZONE A
ZONE A
ZONE A
1
6
5
4
HERLONG
ROAD
ROAD
2
7
8
9
ZONE A
ZONE X
TUSTENUGGEE
13
18
PINE
17
ROAD
16
A
131
ZONE A
24
19
20
21
ROAD
ZONE A
ZONE A
LE

,509-39

23684

Notice of Preventative Treatments for Termites

(as required by Florida Building Code (FBC) 104.2.6)

EDWARDS PEST CONTROL, 386 454 3051
241 SE HARDIN COURT, HIGH SPRINGS, FL, 32643

775 S.W. Jim Ward St. Ft. White, FL. 32038

Address of Treatment or Lot/Block of Treatment

2/10/06	2:30PM	J.W. Edwards
Date	**Time**	**Applicator**
Premise 75	Imidachloprid	520
Product Used	**Chemical used (active ingredient)**	**Number of gallons applied**
.05	3317	
Percent Concentration	**Area treated (square feet)**	**Linear feet treated**

Vertical

Stage of treatment (Horizontal, Vertical, Adjoining Slab, retreat of disturbed area)

As per 104.2.6 – If soil chemical barrier method for termite prevention is used, final exterior treament shall be completed prior to final building approval.

If this notice is for the final exterior treatment, initial and date this line_____.

Mark Disosway, P.E.
POB 868, Lake City, FL 32056, Ph 386-754-5419, Fax 386-269-4871

20 Dec 2005

Permit # 23684

Building Inspector, Columbia Co., Florida

Re: Foundation Inspection, Carter, Ed & Kim Residence

Dear Building Inspector:

This letter is in reference to a foundation inspection issue for Carter, Ed & Kim Residence, Columbia County, Florida, Windload Engineering Job No. 506134.

The "Windload Engineering", Job No. 506134, sheet S-1 specifies a reinforced 8" CMU stem wall foundation with #5 vertical at 8'OC and height maximum 5 courses.

Please accept this letter as addendum to the plans to allow a reinforced 8" CMU stem wall foundation with reinforcement schedule per the attached table. The table assumes 60 ksi reinforcing bars with 6" hook in the footing and bent 24" into the reinforced slab at the top. The vertical steel is to be placed toward the tension side of the CMU wall (away from the soil pressure, within 2" of the exterior side of the wall). If the wall is over 8' high, add Durowall ladder reinforcement at 16"OC vertically or a horizontal bond beam with 1#5 continuous at mid height. For higher parts of the wall 12" CMU may be used with reinforcement as shown in the table below.

Important: The slab braces the top of the stem wall against outward pressure of backfill. The wall should be temporarily braced as the backfill is compacted.

Sincerely,

20 DEC 05

Mark Disosway
Florida Professional Engineer No. 53915

cc Concept Construction Of North Florida Inc

Stemwall Height (Feet)	Unbalanced Backfill Height	Vertical Reinforcement For 8" CMU Stemwall (Inches OC)			Vertical Reinforcement For 12" CMU Stemwall (Inches OC)		
		#5	#7	#8	#5	#7	#8
3.3	3.0	96	96	96	96	96	96
4.0	3.7	96	96	96	96	96	96
4.7	4.3	88	96	96	96	96	96
5.3	5.0	56	96	96	96	96	96
6.0	5.7	40	80	96	80	96	96
6.7	6.3	32	56	80	56	96	96
7.3	7.0	24	40	56	40	80	96
8.0	7.7	16	32	48	32	64	80
8.7	8.3	8	24	32	24	48	64
9.3	9.0	8	16	24	16	40	48

Alpine Engineered Products, Inc.

1950 Marley Drive Haines City, FL 33844
Florida Engineering Certificate of Authorization Number: 567
Florida Certificate of Product Approval # FL1999
 Document ID:1ST5487-Z1020100209

Truss Fabricator: Anderson Truss Company
Job Identification: 5-286-ED & KIM CARTER
Truss Count: 10
Model Code: Florida Building Code
Truss Criteria: ANSI/TPI-2002(STD)/FBC
Engineering Software: Alpine Software,Version 7.22.
Structural Engineer of Record:
Address:
Minimum Design Loads: Roof - 40.0 PSF @ 1.25 Duration
Floor - N/A
Wind - 110 MPH ASCE 7-98 -Closed

Seal Date: 12/20/2005

-Truss Design Engineer-
Arthur R. Fisher
Florida License Number: 59687
1950 Marley Drive
Haines City, FL 33844

Notes:

1. Determination as to the suitability of these truss components for the structure is the responsibility of the building designer/engineer of record, as defined in ANSI/TPI 1
2. The drawing date shown on this index sheet must match the date shown on the individual truss component drawing.
3. As shown on attached drawings; the drawing number is preceded by: HCUSR487

Details: MAX DEAD LOAD-A11015EC-GBLLETIN

#	Ref Description	Drawing#	Date
1	56775--B	05354080	12/20/05
2	56776--BG	05354081	12/20/05
3	56777--BGE	05354082	12/20/05
4	56778--EJ7	05354083	12/20/05
5	56779--CJ5	05354084	12/20/05
6	56780--HJ7	05354085	12/20/05
7	56781--CJ3	05354086	12/20/05
8	56782--CJ1	05354087	12/20/05
9	56783--M	05354088	12/20/05
10	56784--H7M	05354089	12/20/05

Permit # 23684

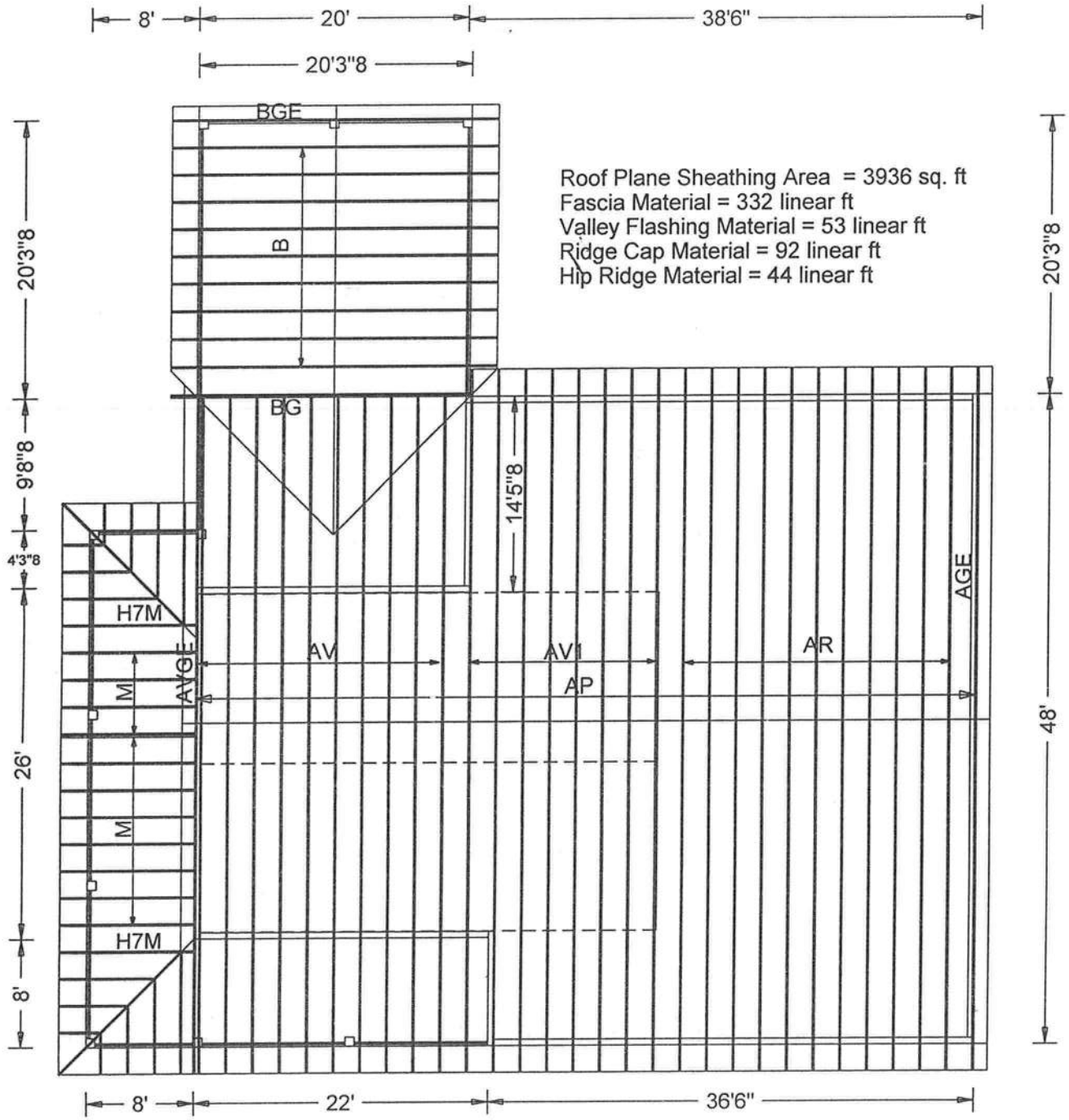

Roof Plane Sheathing Area = 3936 sq. ft
Fascia Material = 332 linear ft
Valley Flashing Material = 53 linear ft
Ridge Cap Material = 92 linear ft
Hip Ridge Material = 44 linear ft

H 755-9406
Kim @ wk 352-316-0905

ED & KIM CARTER

JOB LOCATION:

JOB DESCRIPTION: ED & KIM CARTER

DESIGNED BY:

JOB NO: 5-286

PAGE NO: 1 OF 1

Top chord 2x4 SP #2 Dense
Bot chord 2x4 SP #2 Dense
Webs 2x4 SP #3

Dead loads are stated on projected horizontal area basis.

110 mph wind, 15.00 ft mean hgt, ASCE 7-98, CLOSED bldg, Located anywhere in roof, CAT II, EXP B, wind TC DL=2.8 psf, wind BC DL=2.2 psf.

Deflection meets L/360 live and L/240 total load. Creep increase factor for dead load is 1.50.

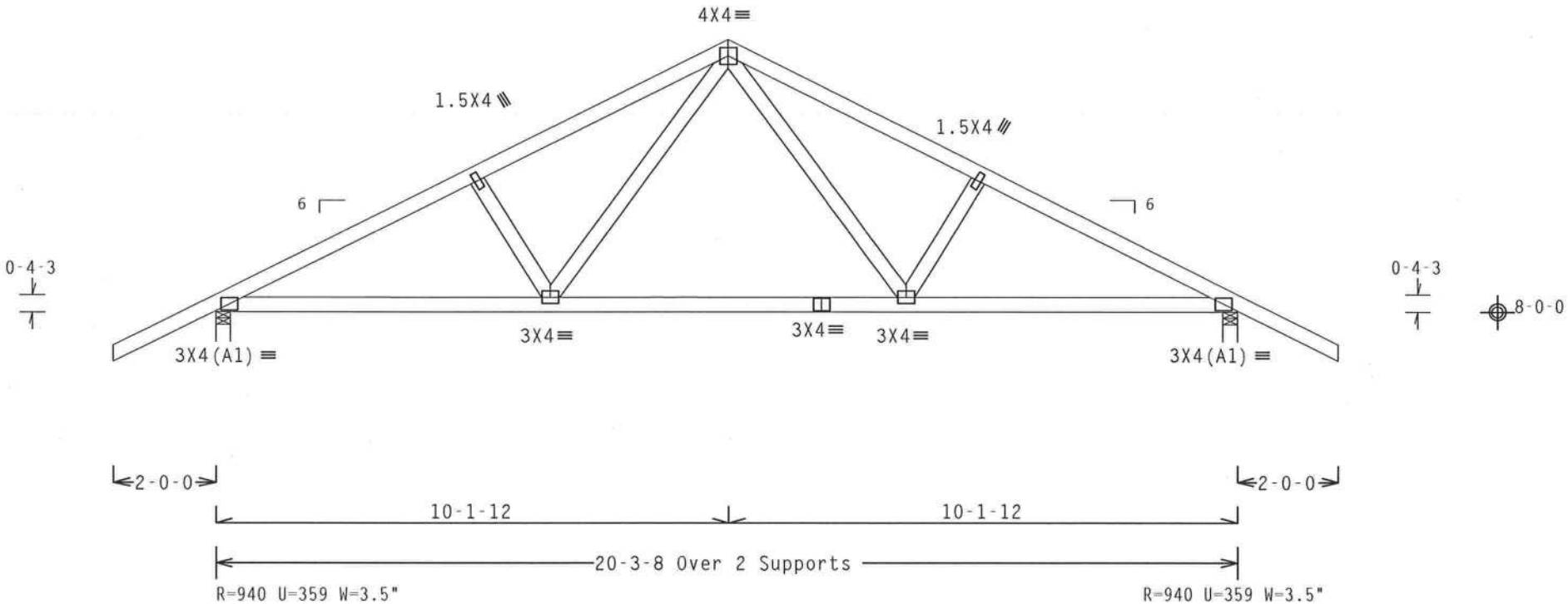

Design Crit: TPI-2002(STD)/FBC
Cq/RT=1.00(1.25)/10(0) 7.22.1 TY:9 FL/-/4/-/-/R/- Scale =.3125"/Ft.

PLT TYP. Wave

ALPINE
Alpine Engineered Products, Inc.
1950 Marley Drive
Haines City, FL 33844
FL Certificate of Authorization # 567

WARNING TRUSSES REQUIRE EXTREME CARE IN FABRICATION, HANDLING, SHIPPING, INSTALLING AND BRACING. REFER TO BCSI 1-03 (BUILDING COMPONENT SAFETY INFORMATION), PUBLISHED BY TPI (TRUSS PLATE INSTITUTE, 583 D'ONOFRIO DR., SUITE 200, MADISON, WI 53719) AND WTCA (WOOD TRUSS COUNCIL OF AMERICA, 6300 ENTERPRISE LN. MADISON, WI 53719) FOR SAFETY PRACTICES PRIOR TO PERFORMING THESE FUNCTIONS. UNLESS OTHERWISE INDICATED, TOP CHORD SHALL HAVE PROPERLY ATTACHED STRUCTURAL PANELS AND BOTTOM CHORD SHALL HAVE A PROPERLY ATTACHED RIGID CEILING.

IMPORTANT FURNISH A COPY OF THIS DESIGN TO THE INSTALLATION CONTRACTOR. ALPINE ENGINEERED PRODUCTS, INC. SHALL NOT BE RESPONSIBLE FOR ANY DEVIATION FROM THIS DESIGN; ANY FAILURE TO BUILD THE TRUSS IN CONFORMANCE WITH TPI; OR FABRICATING, HANDLING, SHIPPING, INSTALLING & BRACING OF TRUSSES. DESIGN CONFORMS WITH APPLICABLE PROVISIONS OF NDS (NATIONAL DESIGN SPEC. BY AF&PA) AND TPI. ALPINE CONNECTOR PLATES ARE MADE OF 20/18/16GA (W,H/S/K) ASTM A653 GRADE 40/60 (H, K/H,S) GALV. STEEL. APPLY PLATES TO EACH FACE OF TRUSS AND, UNLESS OTHERWISE LOCATED ON THIS DESIGN, POSITION PER DRAWINGS 160A-Z. ANY INSPECTION OF PLATES FOLLOWED BY (1) SHALL BE PER ANNEX A3 OF TPI1-2002 SEC.3. A SEAL ON THIS DRAWING INDICATES ACCEPTANCE OF PROFESSIONAL ENGINEERING RESPONSIBILITY SOLELY FOR THE TRUSS COMPONENT DESIGN SHOWN. THE SUITABILITY AND USE OF THIS COMPONENT FOR ANY BUILDING IS THE RESPONSIBILITY OF THE BUILDING DESIGNER PER ANSI/TPI 1 SEC. 2.

ARTHUR R. FISHER
LICENSE
No.59687
STATE OF FLORIDA
PROFESSIONAL ENGINEER
Dec 20 '05

TC LL	20.0 PSF	REF	R487-- 56775
TC DL	10.0 PSF	DATE	12/20/05
BC DL	10.0 PSF	DRW	HCUSR487 05354080
BC LL	0.0 PSF	HC-ENG	JB/AF *
TOT.LD.	40.0 PSF	SEQN-	127822
DUR.FAC.	1.25		
SPACING	24.0"	JREF-	1ST5487_Z10

Top chord 2x4 SP #2 Dense
Bot chord 2x6 SP #2
Webs 2x4 SP #3

SPECIAL LOADS
------(LUMBER DUR.FAC.=1.25 / PLATE DUR.FAC.=1.25)
TC - From 60 PLF at -2.00 to 60 PLF at 20.29
BC - From 4 PLF at -2.00 to 20 PLF at 20.29
BC - 196 LB Conc. Load at 0.44, 2.44, 4.44, 6.44, 8.44
10.44, 12.44, 14.44, 16.44, 18.44

Dead loads are stated on projected horizontal area basis.

Deflection meets L/360 live and L/240 total load. Creep increase factor for dead load is 1.50.

THE ARCHITECT OR ENGINEER OF RECORD SHALL EVALUATE AND APPROVE LOAD MAGNITUDES AND LOCATIONS AS SHOWN ("SPECIAL LOADS".)

2 COMPLETE TRUSSES REQUIRED

Nailing Schedule: (10d_Common_(0.148"x3",_min.)_nails)
Top Chord: 1 Row @12.00" o.c.
Bot Chord: 1 Row @12.00" o.c.
Webs : 1 Row @ 4" o.c.
Use equal spacing between rows and stagger nails in each row to avoid splitting.

110 mph wind, 15.00 ft mean hgt, ASCE 7-98, CLOSED bldg, Located anywhere in roof, CAT II, EXP B, wind TC DL=2.8 psf, wind BC DL=2.2 psf.

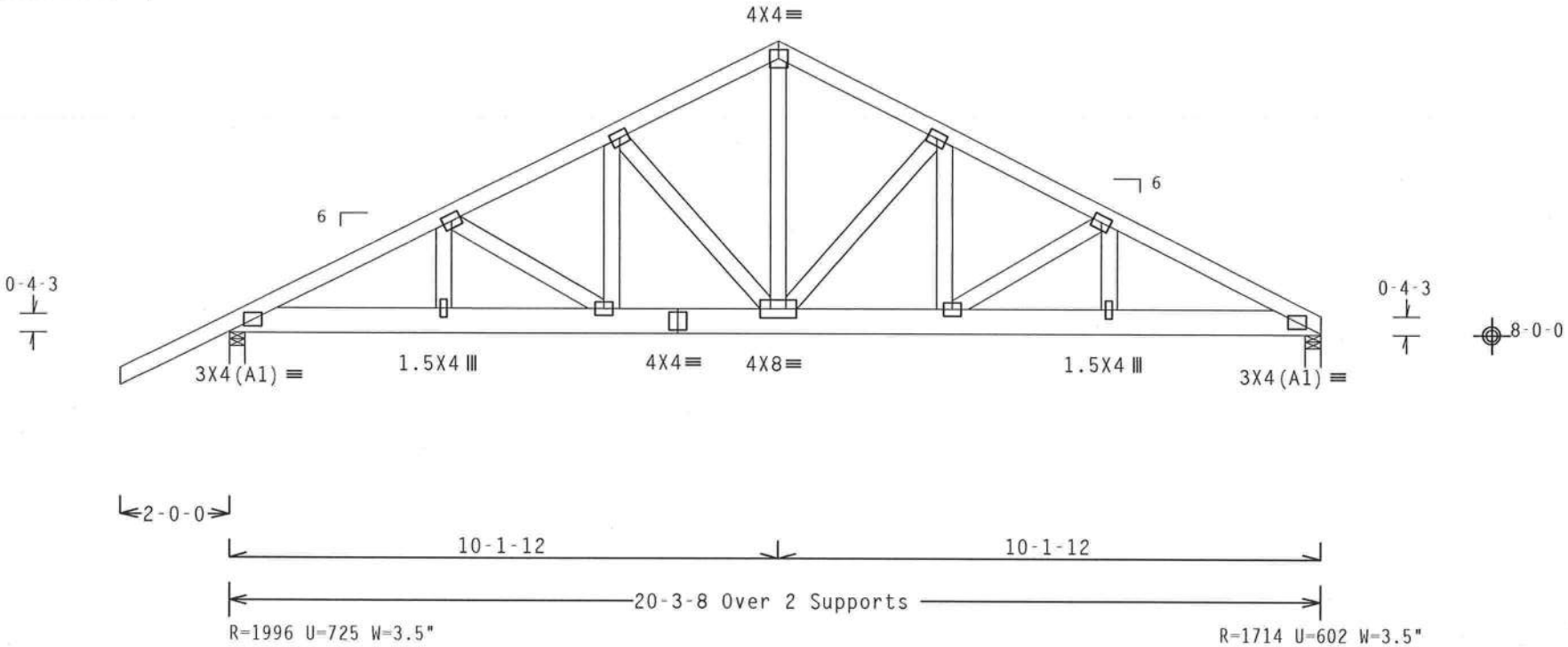

Note: All Plates Are 3X4 Except As Shown.

Design Crit: TPI-2002(STD)/FBC

PLT TYP. Wave Cq/RT=1.00(1.25)/10(0) 7.22.11 QTY:1 FL/-/4/-/-/R/- Scale =.3125"/Ft.

ALPINE
Alpine Engineered Products, Inc.
1950 Marley Drive
Haines City, FL 33844
FL Certificate of Authorization # 567

WARNING TRUSSES REQUIRE EXTREME CARE IN FABRICATION, HANDLING, SHIPPING, INSTALLING AND BRACING. REFER TO BCSI 1-03 (BUILDING COMPONENT SAFETY INFORMATION), PUBLISHED BY TPI (TRUSS PLATE INSTITUTE, 583 D'ONOFRIO DR., SUITE 200, MADISON, WI 53719) AND WTCA (WOOD TRUSS COUNCIL OF AMERICA, 6300 ENTERPRISE LN, MADISON, WI 53719) FOR SAFETY PRACTICES PRIOR TO PERFORMING THESE FUNCTIONS. UNLESS OTHERWISE INDICATED, TOP CHORD SHALL HAVE PROPERLY ATTACHED STRUCTURAL PANELS AND BOTTOM CHORD SHALL HAVE A PROPERLY ATTACHED RIGID CEILING.

IMPORTANT FURNISH A COPY OF THIS DESIGN TO THE INSTALLATION CONTRACTOR. ALPINE ENGINEERED PRODUCTS, INC. SHALL NOT BE RESPONSIBLE FOR ANY DEVIATION FROM THIS DESIGN; ANY FAILURE TO BUILD THE TRUSS IN CONFORMANCE WITH TPI; OR FABRICATING, HANDLING, SHIPPING, INSTALLING & BRACING OF TRUSSES. DESIGN CONFORMS WITH APPLICABLE PROVISIONS OF NDS (NATIONAL DESIGN SPEC. BY AF&PA) AND TPI. ALPINE CONNECTOR PLATES ARE MADE OF 20/18/16GA (W,H/S/K) ASTM A653 GRADE 40/60 (W, K/H,S) GALV. STEEL. APPLY PLATES TO EACH FACE OF TRUSS AND, UNLESS OTHERWISE LOCATED ON THIS DESIGN, POSITION PER DRAWINGS 160A-Z. ANY INSPECTION OF PLATES FOLLOWED BY (1) SHALL BE PER ANNEX A3 OF TPI1-2002 SEC.3. A SEAL ON THIS DRAWING INDICATES ACCEPTANCE OF PROFESSIONAL ENGINEERING RESPONSIBILITY SOLELY FOR THE TRUSS COMPONENT DESIGN SHOWN. THE SUITABILITY AND USE OF THIS COMPONENT FOR ANY BUILDING IS THE RESPONSIBILITY OF THE BUILDING DESIGNER PER ANSI/TPI 1 SEC. 2.

ARTHUR R. FISHER LICENSE No.59687 STATE OF FLORIDA PROFESSIONAL ENGINEER
Dec 20 '05

TC LL	20.0 PSF	REF	R487-- 56776
TC DL	10.0 PSF	DATE	12/20/05
BC DL	10.0 PSF	DRW	HCUSR487 05354081
BC LL	0.0 PSF	HC-ENG	JB/AF
TOT.LD.	40.0 PSF	SEQN-	127826
DUR.FAC.	1.25		
SPACING	24.0"	JREF-	1ST5487_Z10

Top chord 2x4 SP #2 Dense
Bot chord 2x4 SP #2 Dense
Webs 2x4 SP #3
:Stack Chord SC1 2x4 SP #2 Dense:
:Stack Chord SC2 2x4 SP #2 Dense:

See DWGS A11015EC1103 & GBLLETIN0405 for more requirements.

Stacked top chord must NOT be notched or cut in area (NNL). Dropped top chord braced at 24" o.c. intervals. Attach stacked top chord (SC) to dropped top chord in notchable area using 3x4 tie-plates 24" o.c. Center plate on stacked/dropped chord interface, plate length perpendicular to chord length. Splice top chord in notchable area using 3x6.

110 mph wind, 15.00 ft mean hgt, ASCE 7-98, CLOSED bldg, Located anywhere in roof, CAT II, EXP B, wind TC DL=2.8 psf, wind BC DL=2.2 psf.

Truss spaced at 24.0" OC designed to support 2-0-0 top chord outlookers. Cladding load shall not exceed 10.00 PSF. Top chord must not be cut or notched.

In lieu of structural panels use purlins to brace TC @ 24" OC.

Deflection meets L/360 live and L/240 total load. Creep increase factor for dead load is 1.50.

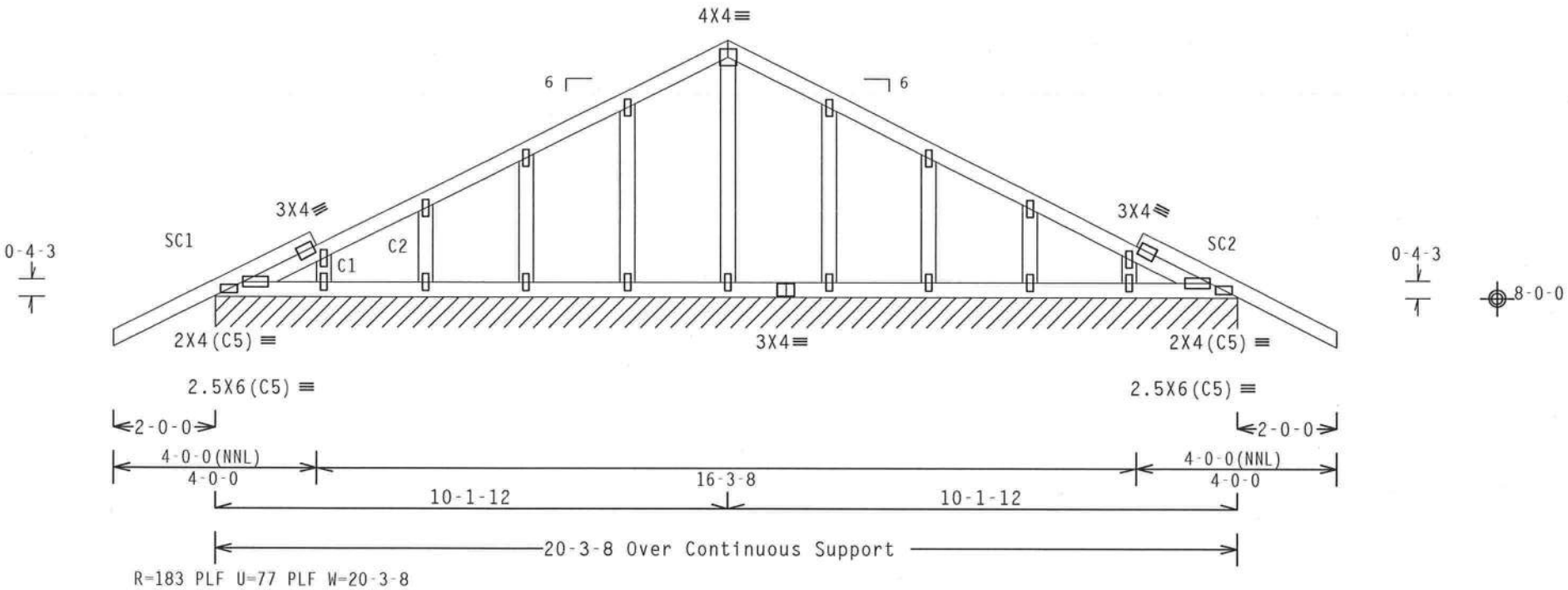

Note: All Plates Are 1.5X4 Except As Shown.

Design Crit: TPI-2002(STD)/FBC

PLT TYP. Wave

Cq/RT=1.00(1.25)/10(0) 7.22.1 QTY:1 FL/-/4/-/-/R/- Scale =.3125"/Ft.

ALPINE

Alpine Engineered Products, Inc.
1950 Marley Drive
Haines City, FL 33844
FL Certificate of Authorization # 567

WARNING TRUSSES REQUIRE EXTREME CARE IN FABRICATION, HANDLING, SHIPPING, INSTALLING AND BRACING. REFER TO BCSI 1-03 (BUILDING COMPONENT SAFETY INFORMATION), PUBLISHED BY TPI (TRUSS PLATE INSTITUTE, 583 D'ONOFRIO DR., SUITE 200, MADISON, WI 53719) AND WTCA (WOOD TRUSS COUNCIL OF AMERICA, 6300 ENTERPRISE LN, MADISON, WI 53719) FOR SAFETY PRACTICES PRIOR TO PERFORMING THESE FUNCTIONS. UNLESS OTHERWISE INDICATED, TOP CHORD SHALL HAVE PROPERLY ATTACHED STRUCTURAL PANELS AND BOTTOM CHORD SHALL HAVE A PROPERLY ATTACHED RIGID CEILING.

IMPORTANT FURNISH A COPY OF THIS DESIGN TO THE INSTALLATION CONTRACTOR. ALPINE ENGINEERED PRODUCTS, INC. SHALL NOT BE RESPONSIBLE FOR ANY DEVIATION FROM THIS DESIGN; ANY FAILURE TO BUILD THE TRUSS IN CONFORMANCE WITH TPI; OR FABRICATING, HANDLING, SHIPPING, INSTALLING & BRACING OF TRUSSES. DESIGN CONFORMS WITH APPLICABLE PROVISIONS OF NDS (NATIONAL DESIGN SPEC, BY AF&PA) AND TPI. ALPINE CONNECTOR PLATES ARE MADE OF 20/18/16GA (W,H/S/K) ASTM A653 GRADE 40/60 (W, K/H,S) GALV. STEEL. APPLY PLATES TO EACH FACE OF TRUSS AND, UNLESS OTHERWISE LOCATED ON THIS DESIGN, POSITION PER DRAWINGS 160A-Z. ANY INSPECTION OF PLATES FOLLOWED BY (1) SHALL BE PER ANNEX A3 OF TPI1-2002 SEC.3. A SEAL ON THIS DRAWING INDICATES ACCEPTANCE OF PROFESSIONAL ENGINEERING RESPONSIBILITY SOLELY FOR THE TRUSS COMPONENT DESIGN SHOWN. THE SUITABILITY AND USE OF THIS COMPONENT FOR ANY BUILDING IS THE RESPONSIBILITY OF THE BUILDING DESIGNER PER ANSI/TPI 1 SEC. 2.

ARTHUR R. FISHER LICENSE No. 59687 STATE OF FLORIDA PROFESSIONAL ENGINEER

Dec 20 '05

TC LL	20.0 PSF	REF	R487-- 56777
TC DL	10.0 PSF	DATE	12/20/05
BC DL	10.0 PSF	DRW	HCUSR487 05354082
BC LL	0.0 PSF	HC-ENG	JB/AF
TOT.LD.	40.0 PSF	SEQN-	127816
DUR.FAC.	1.25		
SPACING	24.0"	JREF-	1ST5487_Z10

Top chord 2x4 SP #2 Dense
Bot chord 2x4 SP #2 Dense

Dead loads are stated on projected horizontal area basis.

Provide (2) 16d common nails(0.162"x3.5"), toe nailed at Top chord.
Provide (2) 16d common nails(0.162"x3.5"), toe nailed at Bot chord.

110 mph wind, 15.00 ft mean hgt, ASCE 7-98, CLOSED bldg, not located within 4.50 ft from roof edge, CAT II, EXP B, wind TC DL=2.8 psf, wind BC DL=2.2 psf.

Deflection meets L/360 live and L/240 total load. Creep increase factor for dead load is 1.50.

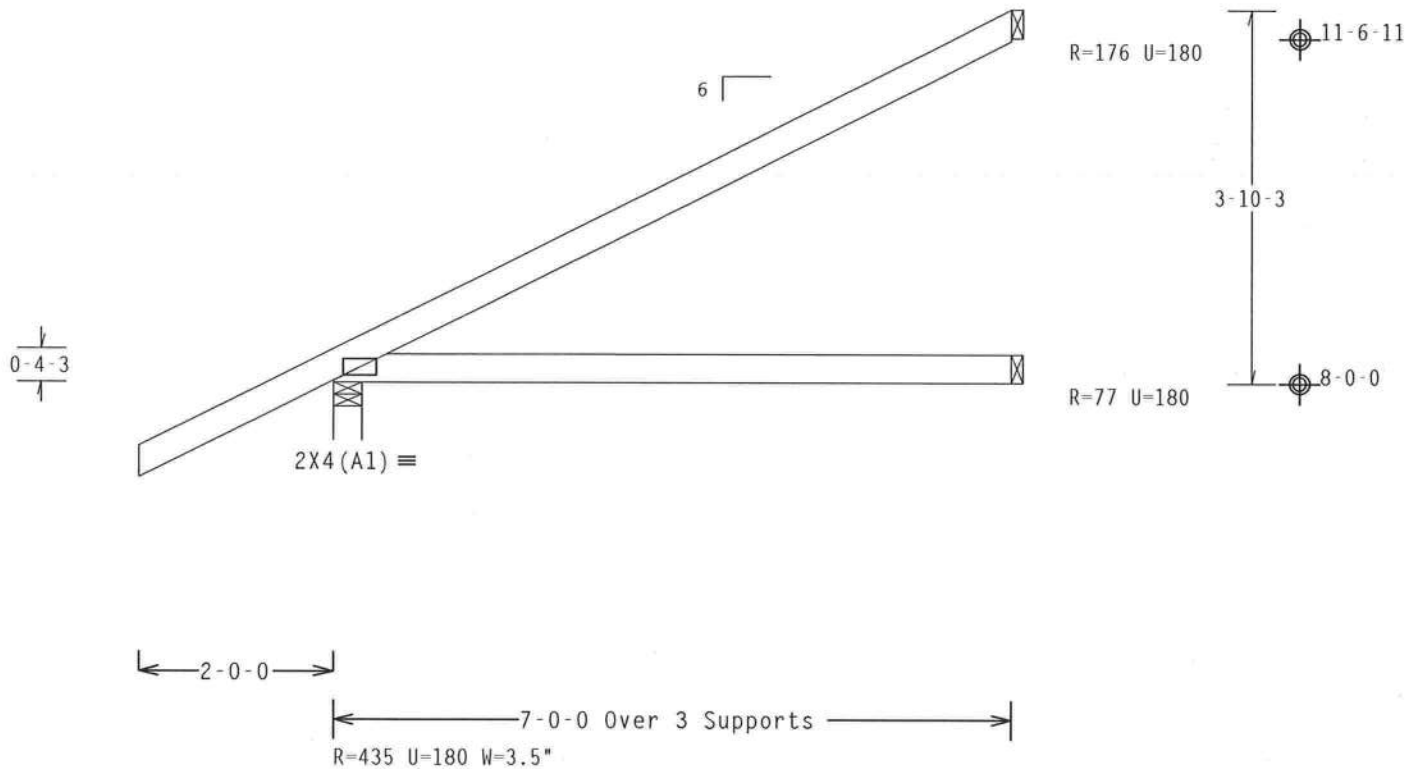

Design Crit: TPI-2002(STD)/FBC
Cq/RT=1.00(1.25)/10(0) 7.22.11 QTY:2 FL/-/4/-/-/R/-

PLT TYP. Wave

Scale =.5"/Ft.

ALPINE
Alpine Engineered Products, Inc.
1950 Marley Drive
Haines City, FL 33844
FL Certificate of Authorization # 567

WARNING TRUSSES REQUIRE EXTREME CARE IN FABRICATION, HANDLING, SHIPPING, INSTALLING AND BRACING. REFER TO BCSI 1-03 (BUILDING COMPONENT SAFETY INFORMATION), PUBLISHED BY TPI (TRUSS PLATE INSTITUTE, 583 D'ONOFRIO DR., SUITE 200, MADISON, WI 53719) AND WTCA (WOOD TRUSS COUNCIL OF AMERICA, 6300 ENTERPRISE LN. MADISON, WI 53719) FOR SAFETY PRACTICES PRIOR TO PERFORMING THESE FUNCTIONS. UNLESS OTHERWISE INDICATED, TOP CHORD SHALL HAVE PROPERLY ATTACHED STRUCTURAL PANELS AND BOTTOM CHORD SHALL HAVE A PROPERLY ATTACHED RIGID CEILING.

IMPORTANT FURNISH A COPY OF THIS DESIGN TO THE INSTALLATION CONTRACTOR. ALPINE ENGINEERED PRODUCTS, INC. SHALL NOT BE RESPONSIBLE FOR ANY DEVIATION FROM THIS DESIGN; ANY FAILURE TO BUILD THE TRUSS IN CONFORMANCE WITH TPI; OR FABRICATING, HANDLING, SHIPPING, INSTALLING & BRACING OF TRUSSES. DESIGN CONFORMS WITH APPLICABLE PROVISIONS OF NDS (NATIONAL DESIGN SPEC, BY AF&PA) AND TPI. ALPINE CONNECTOR PLATES ARE MADE OF 20/18/16GA (W,H/S/K) ASTM A653 GRADE 40/60 (W, K/H,S) GALV. STEEL. APPLY PLATES TO EACH FACE OF TRUSS AND, UNLESS OTHERWISE LOCATED ON THIS DESIGN, POSITION PER DRAWINGS 160A-Z. ANY INSPECTION OF PLATES FOLLOWED BY (1) SHALL BE PER ANNEX A3 OF TPI1-2002 SEC.3. A SEAL ON THIS DRAWING INDICATES ACCEPTANCE OF PROFESSIONAL ENGINEERING RESPONSIBILITY SOLELY FOR THE TRUSS COMPONENT DESIGN SHOWN. THE SUITABILITY AND USE OF THIS COMPONENT FOR ANY BUILDING IS THE RESPONSIBILITY OF THE BUILDING DESIGNER PER ANSI/TPI 1 SEC. 2.

ARTHUR R. FISHER
LICENSE
No. 59687
STATE OF FLORIDA
PROFESSIONAL ENGINEER
Dec 20 '05

TC LL	20.0 PSF	REF R487-- 56778
TC DL	10.0 PSF	DATE 12/20/05
BC DL	10.0 PSF	DRW HCUSR487 05354083
BC LL	0.0 PSF	HC-ENG JB/AF
TOT.LD.	40.0 PSF	SEQN- 127854
DUR.FAC.	1.25	
SPACING	24.0"	JREF- 1ST5487_Z10

Top chord 2x4 SP #2 Dense
Bot chord 2x4 SP #2 Dense

Dead loads are stated on projected horizontal area basis.

Provide (2) 16d common nails(0.162"x3.5"), toe nailed at Top chord.
Provide (2) 16d common nails(0.162"x3.5"), toe nailed at Bot chord.

110 mph wind, 15.00 ft mean hgt, ASCE 7-98, CLOSED bldg, not located within 4.50 ft from roof edge, CAT II, EXP B, wind TC DL=2.8 psf, wind BC DL=2.2 psf.

Deflection meets L/360 live and L/240 total load. Creep increase factor for dead load is 1.50.

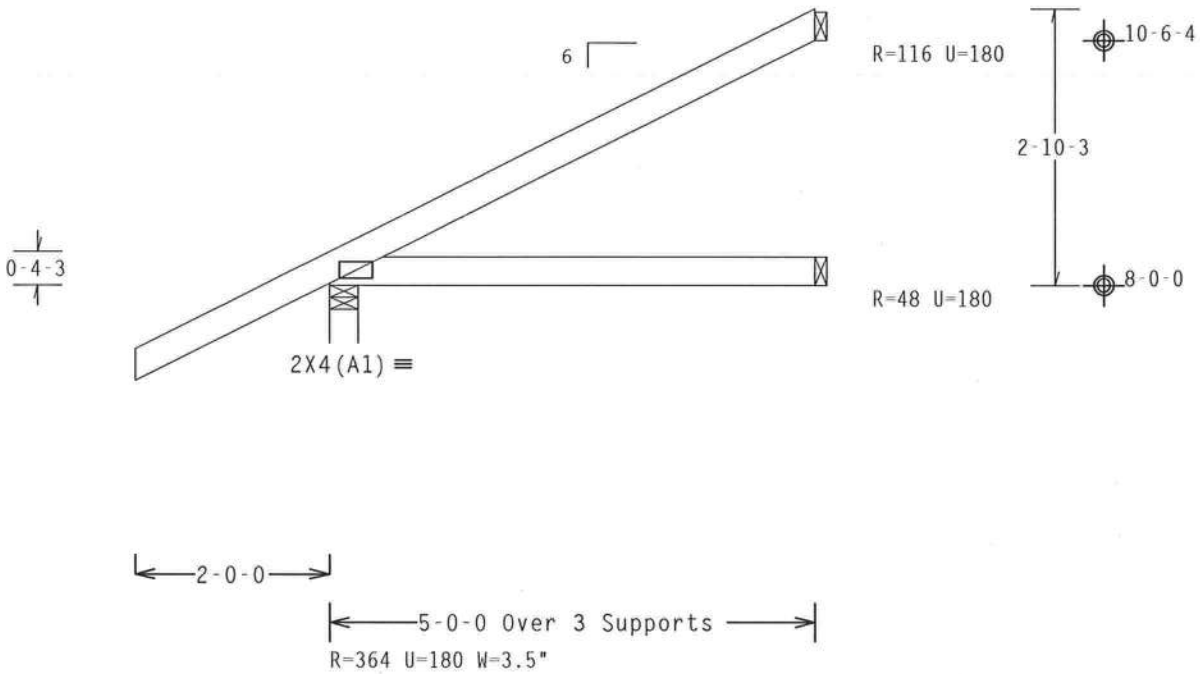

Design Crit: TPI-2002(STD)/FBC
PLT TYP. Wave Cq/RT=1.00(1.25)/10(0) 7.22.1 TY:4 FL/-/4/-/-/R/- Scale =.5"/Ft.

ALPINE
Alpine Engineered Products, Inc.
1950 Marley Drive
Haines City, FL 33844
FL Certificate of Authorization # 567

WARNING TRUSSES REQUIRE EXTREME CARE IN FABRICATION, HANDLING, SHIPPING, INSTALLING AND BRACING. REFER TO BCSI 1-03 (BUILDING COMPONENT SAFETY INFORMATION), PUBLISHED BY TPI (TRUSS PLATE INSTITUTE, 583 D'ONOFRIO DR., SUITE 200, MADISON, WI 53719) AND WTCA (WOOD TRUSS COUNCIL OF AMERICA, 6300 ENTERPRISE LN, MADISON, WI 53719) FOR SAFETY PRACTICES PRIOR TO PERFORMING THESE FUNCTIONS. UNLESS OTHERWISE INDICATED, TOP CHORD SHALL HAVE PROPERLY ATTACHED STRUCTURAL PANELS AND BOTTOM CHORD SHALL HAVE A PROPERLY ATTACHED RIGID CEILING.

IMPORTANT FURNISH A COPY OF THIS DESIGN TO THE INSTALLATION CONTRACTOR. ALPINE ENGINEERED PRODUCTS, INC. SHALL NOT BE RESPONSIBLE FOR ANY DEVIATION FROM THIS DESIGN; ANY FAILURE TO BUILD THE TRUSS IN CONFORMANCE WITH TPI; OR FABRICATING, HANDLING, SHIPPING, INSTALLING & BRACING OF TRUSSES. DESIGN CONFORMS WITH APPLICABLE PROVISIONS OF NDS (NATIONAL DESIGN SPEC. BY AF&PA) AND TPI. ALPINE CONNECTOR PLATES ARE MADE OF 20/18/16GA (W.H/S/K) ASTM A653 GRADE 40/60 (W. K/H.S) GALV. STEEL. APPLY PLATES TO EACH FACE OF TRUSS AND, UNLESS OTHERWISE LOCATED ON THIS DESIGN, POSITION PER DRAWINGS 160A-Z. ANY INSPECTION OF PLATES FOLLOWED BY (1) SHALL BE PER ANNEX A3 OF TPI1-2002 SEC.3. A SEAL ON THIS DRAWING INDICATES ACCEPTANCE OF PROFESSIONAL ENGINEERING RESPONSIBILITY SOLELY FOR THE TRUSS COMPONENT DESIGN SHOWN. THE SUITABILITY AND USE OF THIS COMPONENT FOR ANY BUILDING IS THE RESPONSIBILITY OF THE BUILDING DESIGNER PER ANSI/TPI 1 SEC. 2.

ARTHUR R. FISHER
LICENSE
No. 59687
STATE OF FLORIDA
PROFESSIONAL ENGINEER
Dec 20 '05

TC LL	20.0 PSF	REF R487-- 56779
TC DL	10.0 PSF	DATE 12/20/05
BC DL	10.0 PSF	DRW HCUSR487 05354084
BC LL	0.0 PSF	HC-ENG JB/AF
TOT.LD.	40.0 PSF	SEQN- 127838
DUR.FAC.	1.25	
SPACING	24.0"	JREF- 1ST5487_Z10

Top chord 2x4 SP #2 Dense
Bot chord 2x4 SP #2 Dense
Webs 2x4 SP #3

Dead loads are stated on projected horizontal area basis.

Deflection meets L/360 live and L/240 total load. Creep increase factor for dead load is 1.50.

110 mph wind, 15.00 ft mean hgt, ASCE 7-98, CLOSED bldg, Located anywhere in roof, CAT II, EXP B, wind TC DL=2.8 psf, wind BC DL=2.2 psf.

Hipjack supports 7-0-0 setback jacks with no webs.

Provide (2) 16d common nails(0.162"x3.5"), toe nailed at Top chord.
Provide (3) 16d common nails(0.162"x3.5"), toe nailed at Bot chord.

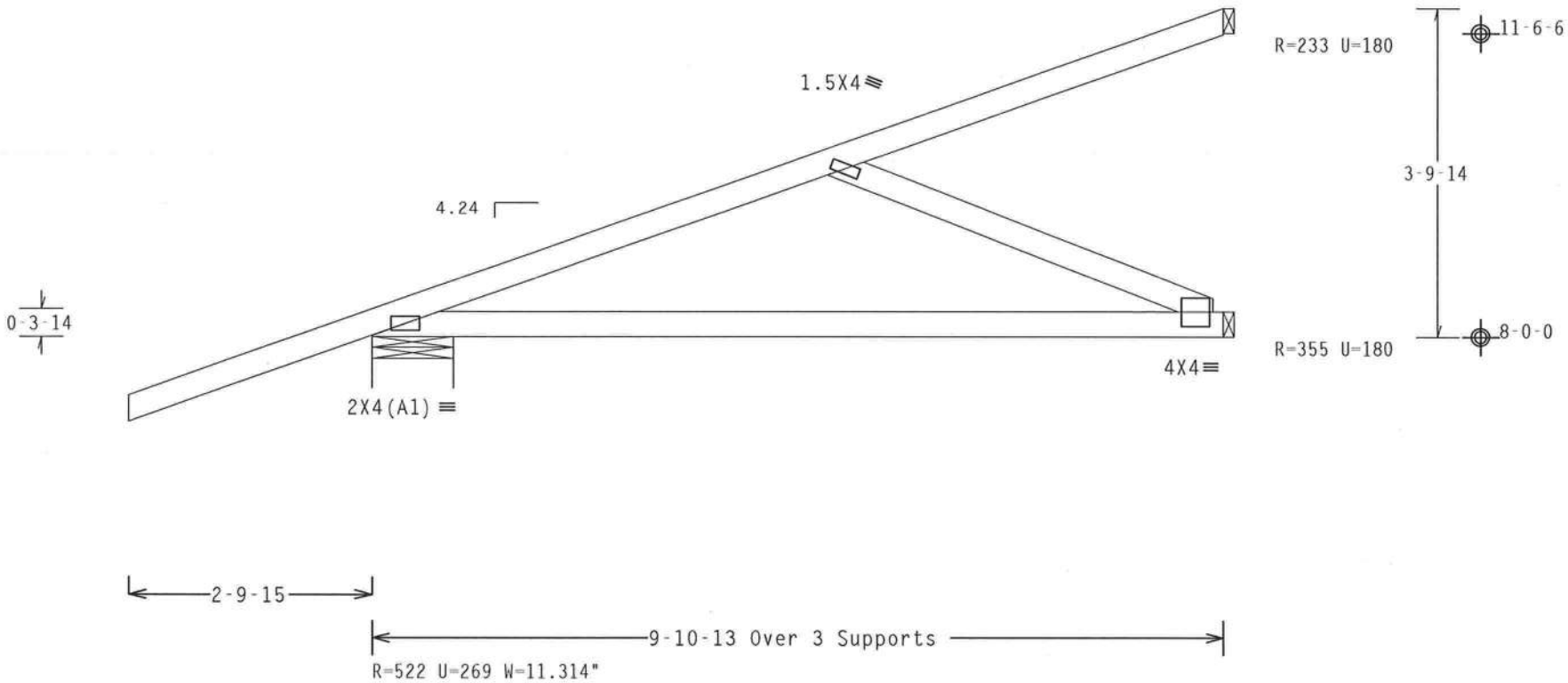

Design Crit: TPI-2002(STD)/FBC
PLT TYP. Wave Cq/RT=1.00(1.25)/10(0) 7.22. QTY:2 FL/-/4/-/-/R/- Scale =.5"/Ft.

ALPINE
Alpine Engineered Products, Inc.
1950 Marley Drive
Haines City, FL 33844
FL Certificate of Authorization # 567

WARNING TRUSSES REQUIRE EXTREME CARE IN FABRICATION, HANDLING, SHIPPING, INSTALLING AND BRACING. REFER TO BCSI 1-03 (BUILDING COMPONENT SAFETY INFORMATION), PUBLISHED BY TPI (TRUSS PLATE INSTITUTE, 583 D'ONOFRIO DR., SUITE 200, MADISON, WI 53719) AND WTCA (WOOD TRUSS COUNCIL OF AMERICA, 6300 ENTERPRISE LN, MADISON, WI 53719) FOR SAFETY PRACTICES PRIOR TO PERFORMING THESE FUNCTIONS. UNLESS OTHERWISE INDICATED, TOP CHORD SHALL HAVE PROPERLY ATTACHED STRUCTURAL PANELS AND BOTTOM CHORD SHALL HAVE A PROPERLY ATTACHED RIGID CEILING.

IMPORTANT FURNISH A COPY OF THIS DESIGN TO THE INSTALLATION CONTRACTOR. ALPINE ENGINEERED PRODUCTS, INC. SHALL NOT BE RESPONSIBLE FOR ANY DEVIATION FROM THIS DESIGN; ANY FAILURE TO BUILD THE TRUSS IN CONFORMANCE WITH TPI; OR FABRICATING, HANDLING, SHIPPING, INSTALLING & BRACING OF TRUSSES. DESIGN CONFORMS WITH APPLICABLE PROVISIONS OF NDS (NATIONAL DESIGN SPEC, BY AF&PA) AND TPI. ALPINE CONNECTOR PLATES ARE MADE OF 20/18/16GA (W.H/S/K) ASTM A653 GRADE 40/60 (W, K/H,S) GALV. STEEL. APPLY PLATES TO EACH FACE OF TRUSS AND, UNLESS OTHERWISE LOCATED ON THIS DESIGN, POSITION PER DRAWINGS 160A-Z. ANY INSPECTION OF PLATES FOLLOWED BY (1) SHALL BE PER ANNEX A3 OF TPI1-2002 SEC.3. A SEAL ON THIS DRAWING INDICATES ACCEPTANCE OF PROFESSIONAL ENGINEERING RESPONSIBILITY SOLELY FOR THE TRUSS COMPONENT DESIGN SHOWN. THE SUITABILITY AND USE OF THIS COMPONENT FOR ANY BUILDING IS THE RESPONSIBILITY OF THE BUILDING DESIGNER PER ANSI/TPI 1 SEC. 2.

ARTHUR J. FISHER
LICENSE
No.59687
STATE OF FLORIDA
PROFESSIONAL ENGINEER
Dec 20 '05

TC LL	20.0 PSF	REF	R487-- 56780
TC DL	10.0 PSF	DATE	12/20/05
BC DL	10.0 PSF	DRW	HCUSR487 05354085
BC LL	0.0 PSF	HC-ENG	JB/AF
TOT.LD.	40.0 PSF	SEQN-	127850
DUR.FAC.	1.25		
SPACING	24.0"	JREF-	1ST5487_Z10

Top chord 2x4 SP #2 Dense
Bot chord 2x4 SP #2 Dense

Dead loads are stated on projected horizontal area basis.

Provide (2) 16d common nails(0.162"x3.5"), toe nailed at Top chord.
Provide (2) 16d common nails(0.162"x3.5"), toe nailed at Bot chord.

110 mph wind, 15.00 ft mean hgt, ASCE 7-98, CLOSED bldg, Located anywhere in roof, CAT II, EXP B, wind TC DL=2.8 psf, wind BC DL=2.2 psf.

Deflection meets L/360 live and L/240 total load. Creep increase factor for dead load is 1.50.

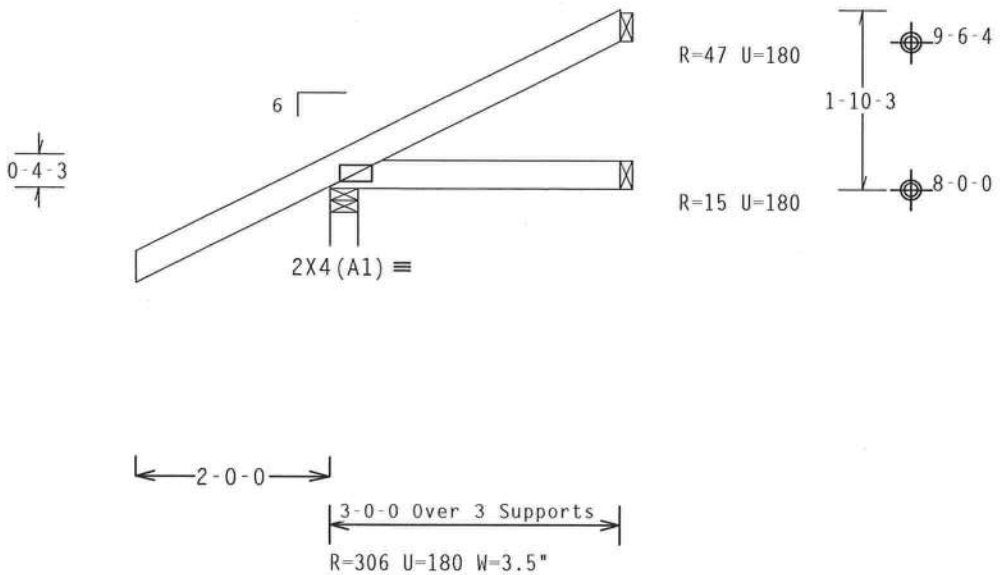

Design Crit: TPI-2002(STD)/FBC
Cq/RT=1.00(1.25)/10(0) 7.22.11 TY:4 FL/-/4/-/-/R/-

PLT TYP. Wave

Scale =.5"/Ft.

ALPINE
Alpine Engineered Products, Inc.
1950 Marley Drive
Haines City, FL 33844
FL Certificate of Authorization # 567

WARNING TRUSSES REQUIRE EXTREME CARE IN FABRICATION, HANDLING, SHIPPING, INSTALLING AND BRACING. REFER TO BCSI 1-03 (BUILDING COMPONENT SAFETY INFORMATION), PUBLISHED BY TPI (TRUSS PLATE INSTITUTE, 583 D'ONOFRIO DR., SUITE 200, MADISON, WI 53719) AND WTCA (WOOD TRUSS COUNCIL OF AMERICA, 6300 ENTERPRISE LN, MADISON, WI 53719) FOR SAFETY PRACTICES PRIOR TO PERFORMING THESE FUNCTIONS. UNLESS OTHERWISE INDICATED, TOP CHORD SHALL HAVE PROPERLY ATTACHED STRUCTURAL PANELS AND BOTTOM CHORD SHALL HAVE A PROPERLY ATTACHED RIGID CEILING.

IMPORTANT FURNISH A COPY OF THIS DESIGN TO THE INSTALLATION CONTRACTOR. ALPINE ENGINEERED PRODUCTS, INC. SHALL NOT BE RESPONSIBLE FOR ANY DEVIATION FROM THIS DESIGN; ANY FAILURE TO BUILD THE TRUSS IN CONFORMANCE WITH TPI; OR FABRICATING, HANDLING, SHIPPING, INSTALLING & BRACING OF TRUSSES. DESIGN CONFORMS WITH APPLICABLE PROVISIONS OF NDS (NATIONAL DESIGN SPEC. BY AF&PA) AND TPI. ALPINE CONNECTOR PLATES ARE MADE OF 20/18/16GA (W.H/S/K) ASTM A653 GRADE 40/60 (W. K/H.S) GALV. STEEL. APPLY PLATES TO EACH FACE OF TRUSS AND, UNLESS OTHERWISE LOCATED ON THIS DESIGN, POSITION PER DRAWINGS 160A-Z. ANY INSPECTION OF PLATES FOLLOWED BY (1) SHALL BE PER ANNEX A3 OF TPI1-2002 SEC.3. A SEAL ON THIS DRAWING INDICATES ACCEPTANCE OF PROFESSIONAL ENGINEERING RESPONSIBILITY SOLELY FOR THE TRUSS COMPONENT DESIGN SHOWN. THE SUITABILITY AND USE OF THIS COMPONENT FOR ANY BUILDING IS THE RESPONSIBILITY OF THE BUILDING DESIGNER PER ANSI/TPI 1 SEC. 2.

ARTHUR R. FISHER
LICENSE
No. 59687
STATE OF FLORIDA
PROFESSIONAL ENGINEER
Dec 20, 2005

TC LL	20.0 PSF	REF	R487-- 56781
TC DL	10.0 PSF	DATE	12/20/05
BC DL	10.0 PSF	DRW	HCUSR487 05354086
BC LL	0.0 PSF	HC-ENG	JB/AF
TOT.LD.	40.0 PSF	SEQN-	127842
DUR.FAC.	1.25		
SPACING	24.0"	JREF-	1ST5487_Z10

Top chord 2x4 SP #2 Dense
Bot chord 2x4 SP #2 Dense

Dead loads are stated on projected horizontal area basis.

Provide (2) 16d common nails(0.162"x3.5"), toe nailed at Top chord.
Provide (2) 16d common nails(0.162"x3.5"), toe nailed at Bot chord.

110 mph wind, 15.00 ft mean hgt, ASCE 7-98, CLOSED bldg, Located anywhere in roof, CAT II, EXP B, wind TC DL=2.8 psf, wind BC DL=2.2 psf.

Deflection meets L/360 live and L/240 total load. Creep increase factor for dead load is 1.50.

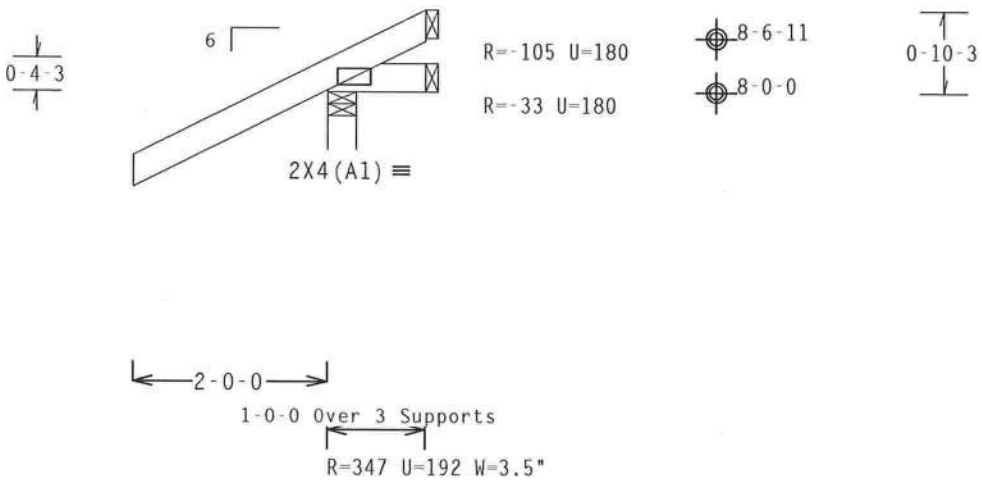

Design Crit: TPI-2002(STD)/FBC
Cq/RT=1.00(1.25)/10(0) 7.22.1 QTY:4 FL/-/4/-/-/R/-

PLT TYP. Wave

Scale =.5"/Ft.

ALPINE
Alpine Engineered Products, Inc.
1950 Marley Drive
Haines City, FL 33844
FL Certificate of Authorization # 567

WARNING TRUSSES REQUIRE EXTREME CARE IN FABRICATION, HANDLING, SHIPPING, INSTALLING AND BRACING. REFER TO BCSI 1-03 (BUILDING COMPONENT SAFETY INFORMATION), PUBLISHED BY TPI (TRUSS PLATE INSTITUTE, 583 D'ONOFRIO DR., SUITE 200, MADISON, WI 53719) AND WTCA (WOOD TRUSS COUNCIL OF AMERICA, 6300 ENTERPRISE LN, MADISON, WI 53719) FOR SAFETY PRACTICES PRIOR TO PERFORMING THESE FUNCTIONS. UNLESS OTHERWISE INDICATED, TOP CHORD SHALL HAVE PROPERLY ATTACHED STRUCTURAL PANELS AND BOTTOM CHORD SHALL HAVE A PROPERLY ATTACHED RIGID CEILING.

IMPORTANT FURNISH A COPY OF THIS DESIGN TO THE INSTALLATION CONTRACTOR. ALPINE ENGINEERED PRODUCTS, INC. SHALL NOT BE RESPONSIBLE FOR ANY DEVIATION FROM THIS DESIGN; ANY FAILURE TO BUILD THE TRUSS IN CONFORMANCE WITH TPI; OR FABRICATING, HANDLING, SHIPPING, INSTALLING & BRACING OF TRUSSES. DESIGN CONFORMS WITH APPLICABLE PROVISIONS OF NDS (NATIONAL DESIGN SPEC, BY AF&PA) AND TPI. ALPINE CONNECTOR PLATES ARE MADE OF 20/18/16GA (W,H/S/K) ASTM A653 GRADE 40/60 (W, K/H,S) GALV. STEEL. APPLY PLATES TO EACH FACE OF TRUSS AND, UNLESS OTHERWISE LOCATED ON THIS DESIGN, POSITION PER DRAWINGS 160A-Z. ANY INSPECTION OF PLATES FOLLOWED BY (1) SHALL BE PER ANNEX A3 OF TPI1-2002 SEC.3. A SEAL ON THIS DRAWING INDICATES ACCEPTANCE OF PROFESSIONAL ENGINEERING RESPONSIBILITY SOLELY FOR THE TRUSS COMPONENT DESIGN SHOWN. THE SUITABILITY AND USE OF THIS COMPONENT FOR ANY BUILDING IS THE RESPONSIBILITY OF THE BUILDING DESIGNER PER ANSI/TPI 1 SEC. 2.

ARTHUR R. FISHER LICENSE No.59687 STATE OF FLORIDA PROFESSIONAL ENGINEER
Dec 20 '05

TC LL	20.0 PSF	REF R487-- 56782
TC DL	10.0 PSF	DATE 12/20/05
BC DL	10.0 PSF	DRW HCUSR487 05354087
BC LL	0.0 PSF	HC-ENG JB/AF
TOT.LD.	40.0 PSF	SEQN- 127846
DUR.FAC.	1.25	
SPACING	24.0"	JREF- 1ST5487_Z10

Top chord 2x4 SP #2 Dense
Bot chord 2x4 SP #2 Dense
Webs 2x4 SP #3

Dead loads are stated on projected horizontal area basis.

(J) hanger connection not found in inventory file for this condition. Provide connection.

110 mph wind, 15.00 ft mean hgt, ASCE 7-98, CLOSED bldg, not located within 4.50 ft from roof edge, CAT II, EXP B, wind TC DL=2.8 psf, wind BC DL=2.2 psf.

Right end vertical not exposed to wind pressure.

Deflection meets L/360 live and L/240 total load. Creep increase factor for dead load is 1.50.

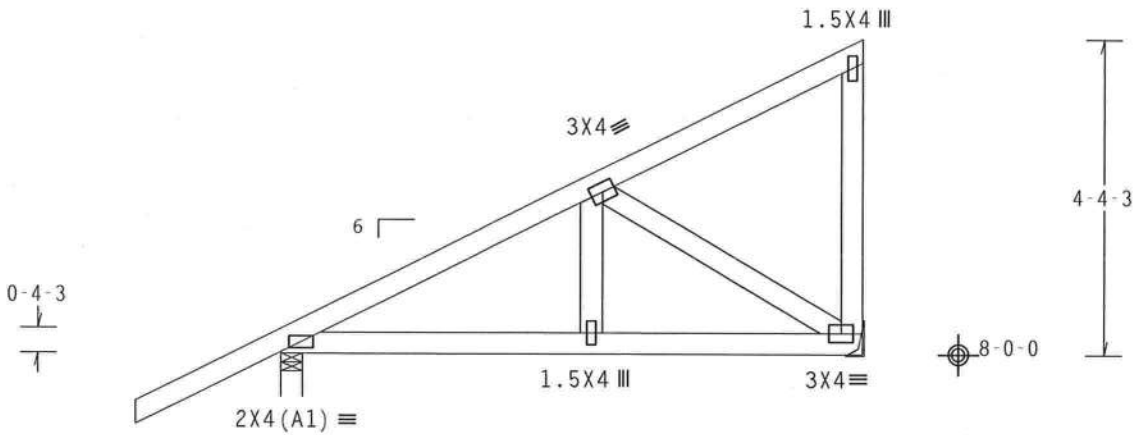

2-0-0

8-0-0 Over 2 Supports

R=473 U=186 W=3.5"

R=295 U=180 H=Simpson LU24
w/ (2) 10d, 0.148"x1.5" nails in Truss
w/ (4) 10d Common, 0.148"x3.0" nails in Girder
Girder is (1)2X6

Design Crit: TPI-2002(STD)/FBC
Cq/RT=1.00(1.25)/10(0) 7.22.11 TY:12 FL/-/4/-/-/R/-

PLT TYP. Wave

Scale =.375"/Ft.

ALPINE

Alpine Engineered Products, Inc.
1950 Marley Drive
Haines City, FL 33844
FL Certificate of Authorization # 567

WARNING TRUSSES REQUIRE EXTREME CARE IN FABRICATION, HANDLING, SHIPPING, INSTALLING AND BRACING. REFER TO BCSI 1-03 (BUILDING COMPONENT SAFETY INFORMATION), PUBLISHED BY TPI (TRUSS PLATE INSTITUTE, 583 D'ONOFRIO DR., SUITE 200, MADISON, WI 53719) AND WTCA (WOOD TRUSS COUNCIL OF AMERICA, 6300 ENTERPRISE LN, MADISON, WI 53719) FOR SAFETY PRACTICES PRIOR TO PERFORMING THESE FUNCTIONS. UNLESS OTHERWISE INDICATED, TOP CHORD SHALL HAVE PROPERLY ATTACHED STRUCTURAL PANELS AND BOTTOM CHORD SHALL HAVE A PROPERLY ATTACHED RIGID CEILING.

IMPORTANT FURNISH A COPY OF THIS DESIGN TO THE INSTALLATION CONTRACTOR. ALPINE ENGINEERED PRODUCTS, INC. SHALL NOT BE RESPONSIBLE FOR ANY DEVIATION FROM THIS DESIGN; ANY FAILURE TO BUILD THE TRUSS IN CONFORMANCE WITH TPI: OR FABRICATING, HANDLING, SHIPPING, INSTALLING & BRACING OF TRUSSES. DESIGN CONFORMS WITH APPLICABLE PROVISIONS OF NDS (NATIONAL DESIGN SPEC, BY AF&PA) AND TPI. ALPINE CONNECTOR PLATES ARE MADE OF 20/18/16GA (W,H/S/K) ASTM A653 GRADE 40/60 (W, K/H,S) GALV. STEEL. APPLY PLATES TO EACH FACE OF TRUSS AND, UNLESS OTHERWISE LOCATED ON THIS DESIGN, POSITION PER DRAWINGS 160A-Z. ANY INSPECTION OF PLATES FOLLOWED BY (1) SHALL BE PER ANNEX A3 OF TPI1-2002 SEC.3. A SEAL ON THIS DRAWING INDICATES ACCEPTANCE OF PROFESSIONAL ENGINEERING RESPONSIBILITY SOLELY FOR THE TRUSS COMPONENT DESIGN SHOWN. THE SUITABILITY AND USE OF THIS COMPONENT FOR ANY BUILDING IS THE RESPONSIBILITY OF THE BUILDING DESIGNER PER ANSI/TPI 1 SEC. 2.

ARTHUR R. FISHER
LICENSE
No. 59687
STATE OF FLORIDA
PROFESSIONAL ENGINEER
Dec 20 '05

TC LL	20.0 PSF	REF R487-- 56783
TC DL	10.0 PSF	DATE 12/20/05
BC DL	10.0 PSF	DRW HCUSR487 05354088
BC LL	0.0 PSF	HC-ENG JB/AF
TOT.LD.	40.0 PSF	SEQN- 127830
DUR.FAC.	1.25	
SPACING	24.0"	JREF- 1ST5487_Z10

Top chord 2x4 SP #2 Dense
Bot chord 2x4 SP #2 Dense
Webs 2x4 SP #3

Dead loads are stated on projected horizontal area basis.

H = recommended connection based on manufacturer tested capacities and calculations. Conditions may exist that require different connections than indicated. Refer to manufacturer publication for additional information.

110 mph wind, 15.00 ft mean hgt, ASCE 7-98, CLOSED bldg, Located anywhere in roof, CAT II, EXP B, wind TC DL=2.8 psf, wind BC DL=2.2 psf.

Right end vertical not exposed to wind pressure.

#1 hip supports 7-0-0 jacks with no webs.

Deflection meets L/360 live and L/240 total load. Creep increase factor for dead load is 1.50.

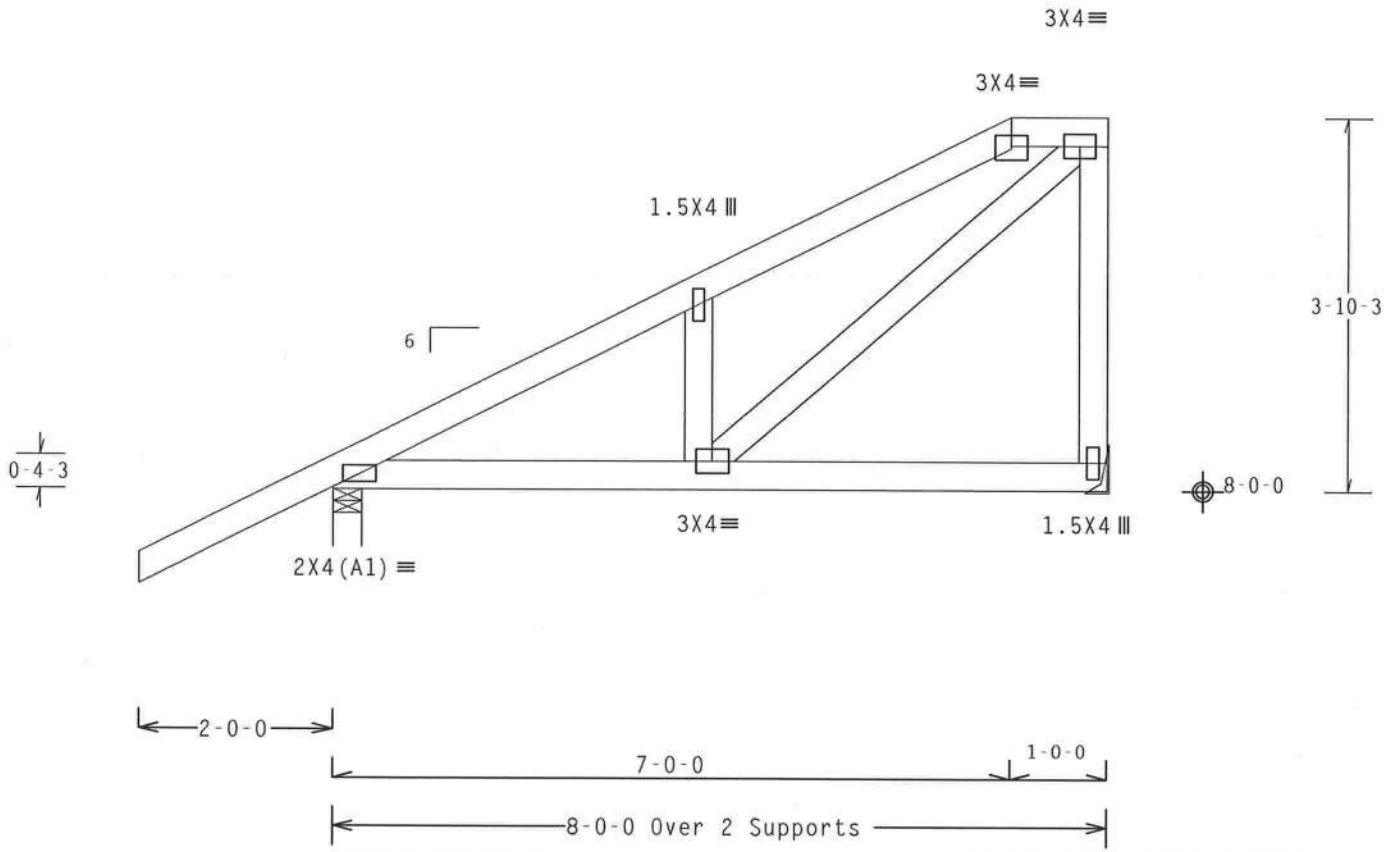

Design Crit: TPI-2002(STD)/FBC
Cq/RT=1.00(1.25)/10(0) 7.22.1

PLT TYP. Wave

QTY:2 FL/-/4/-/-/R/- Scale =.5"/Ft.

ALPINE
Alpine Engineered Products, Inc.
1950 Marley Drive
Haines City, FL 33844
FL Certificate of Authorization # 567

WARNING TRUSSES REQUIRE EXTREME CARE IN FABRICATION, HANDLING, SHIPPING, INSTALLING AND BRACING. REFER TO BCSI 1-03 (BUILDING COMPONENT SAFETY INFORMATION), PUBLISHED BY TPI (TRUSS PLATE INSTITUTE, 583 D'ONOFRIO DR., SUITE 200, MADISON, WI 53719) AND WTCA (WOOD TRUSS COUNCIL OF AMERICA, 6300 ENTERPRISE LN, MADISON, WI 53719) FOR SAFETY PRACTICES PRIOR TO PERFORMING THESE FUNCTIONS. UNLESS OTHERWISE INDICATED, TOP CHORD SHALL HAVE PROPERLY ATTACHED STRUCTURAL PANELS AND BOTTOM CHORD SHALL HAVE A PROPERLY ATTACHED RIGID CEILING.

IMPORTANT FURNISH A COPY OF THIS DESIGN TO THE INSTALLATION CONTRACTOR. ALPINE ENGINEERED PRODUCTS, INC. SHALL NOT BE RESPONSIBLE FOR ANY DEVIATION FROM THIS DESIGN; ANY FAILURE TO BUILD THE TRUSS IN CONFORMANCE WITH TPI; OR FABRICATING, HANDLING, SHIPPING, INSTALLING & BRACING OF TRUSSES. DESIGN CONFORMS WITH APPLICABLE PROVISIONS OF NDS (NATIONAL DESIGN SPEC, BY AF&PA) AND TPI. ALPINE CONNECTOR PLATES ARE MADE OF 20/18/16GA (W,H/S/K) ASTM A653 GRADE 40/60 (W, K/H,S) GALV. STEEL. APPLY PLATES TO EACH FACE OF TRUSS AND, UNLESS OTHERWISE LOCATED ON THIS DESIGN, POSITION PER DRAWINGS 160A-2. ANY INSPECTION OF PLATES FOLLOWED BY (I) SHALL BE PER ANNEX A3 OF TPI1-2002 SEC.3. A SEAL ON THIS DRAWING INDICATES ACCEPTANCE OF PROFESSIONAL ENGINEERING RESPONSIBILITY SOLELY FOR THE TRUSS COMPONENT DESIGN SHOWN. THE SUITABILITY AND USE OF THIS COMPONENT FOR ANY BUILDING IS THE RESPONSIBILITY OF THE BUILDING DESIGNER PER ANSI/TPI 1 SEC. 2.

ARTHUR R. FISHER LICENSE No.59687 STATE OF FLORIDA PROFESSIONAL ENGINEER

Dec 20 '05

TC LL	20.0 PSF	REF R487-- 56784
TC DL	10.0 PSF	DATE 12/20/05
BC DL	10.0 PSF	DRW HCUSR487 05354089
BC LL	0.0 PSF	HC-ENG JB/AF
TOT.LD.	40.0 PSF	SEQN- 127834
DUR.FAC.	1.25	
SPACING	24.0"	JREF- 1ST5487_Z10

ASCE 7-98: 110 MPH WIND SPEED, 15' MEAN HEIGHT, ENCLOSED, I = 1.00, EXPOSURE C

MAX GABLE VERTICAL LENGTH

2X4 GABLE VERTICAL SPACING	SPECIES	GRADE \ BRACE	NO BRACES	(1) 1X4 "L" BRACE * GROUP A	(1) 1X4 "L" BRACE * GROUP B	(1) 2X4 "L" BRACE * GROUP A	(1) 2X4 "L" BRACE * GROUP B	(2) 2X4 "L" BRACE ** GROUP A	(2) 2X4 "L" BRACE ** GROUP B	(1) 2X6 "L" BRACE * GROUP A	(1) 2X6 "L" BRACE * GROUP B	(2) 2X6 "L" BRACE ** GROUP A	(2) 2X6 "L" BRACE ** GROUP B
24" O.C.	SPF HF	#1 / #2	3' 10"	6' 8"	6' 10"	7' 11"	8' 1"	9' 5"	9' 8"	12' 5"	12' 9"	14' 0"	14' 0"
		#3	3' 9"	6' 0"	6' 0"	7' 11"	7' 11"	9' 5"	9' 5"	12' 4"	12' 4"	14' 0"	14' 0"
		STUD	3' 9"	6' 0"	6' 0"	7' 11"	7' 11"	9' 5"	9' 5"	12' 3"	12' 3"	14' 0"	14' 0"
		STANDARD	3' 9"	5' 2"	5' 2"	6' 9"	6' 9"	9' 1"	9' 1"	10' 7"	10' 7"	14' 0"	14' 0"
	SP DFL	#1	4' 3"	6' 8"	7' 2"	7' 11"	8' 6"	9' 5"	10' 2"	12' 5"	13' 5"	14' 0"	14' 0"
		#2	4' 2"	6' 8"	7' 2"	7' 11"	8' 6"	9' 5"	10' 2"	12' 5"	13' 5"	14' 0"	14' 0"
		#3	4' 0"	6' 2"	6' 2"	7' 11"	8' 1"	9' 5"	9' 11"	12' 5"	12' 8"	14' 0"	14' 0"
		STUD	4' 0"	6' 1"	6' 1"	7' 11"	8' 0"	9' 5"	9' 11"	12' 5"	12' 6"	14' 0"	14' 0"
		STANDARD	3' 10"	5' 3"	5' 3"	6' 11"	6' 11"	9' 4"	9' 4"	10' 10"	10' 10"	14' 0"	14' 0"
16" O.C.	SPF HF	#1 / #2	4' 5"	7' 8"	7' 10"	9' 1"	9' 4"	10' 10"	11' 1"	14' 0"	14' 0"	14' 0"	14' 0"
		#3	4' 4"	7' 4"	7' 4"	9' 1"	9' 1"	10' 10"	10' 10"	14' 0"	14' 0"	14' 0"	14' 0"
		STUD	4' 4"	7' 4"	7' 4"	9' 1"	9' 1"	10' 10"	10' 10"	14' 0"	14' 0"	14' 0"	14' 0"
		STANDARD	4' 4"	6' 4"	6' 4"	8' 4"	8' 4"	10' 10"	10' 10"	12' 11"	12' 11"	14' 0"	14' 0"
	SP DFL	#1	4' 10"	7' 8"	8' 3"	9' 1"	9' 9"	10' 10"	11' 8"	14' 0"	14' 0"	14' 0"	14' 0"
		#2	4' 9"	7' 8"	8' 3"	9' 1"	9' 9"	10' 10"	11' 8"	14' 0"	14' 0"	14' 0"	14' 0"
		#3	4' 6"	7' 7"	7' 7"	9' 1"	9' 6"	10' 10"	11' 4"	14' 0"	14' 0"	14' 0"	14' 0"
		STUD	4' 6"	7' 6"	7' 6"	9' 1"	9' 6"	10' 10"	11' 4"	14' 0"	14' 0"	14' 0"	14' 0"
		STANDARD	4' 5"	6' 5"	6' 5"	8' 6"	8' 6"	10' 10"	11' 1"	13' 3"	13' 3"	14' 0"	14' 0"
12" O.C.	SPF HF	#1 / #2	4' 11"	8' 5"	8' 8"	10' 0"	10' 3"	11' 11"	12' 3"	14' 0"	14' 0"	14' 0"	14' 0"
		#3	4' 9"	8' 5"	8' 5"	10' 0"	10' 0"	11' 11"	11' 11"	14' 0"	14' 0"	14' 0"	14' 0"
		STUD	4' 9"	8' 5"	8' 5"	10' 0"	10' 0"	11' 11"	11' 11"	14' 0"	14' 0"	14' 0"	14' 0"
		STANDARD	4' 9"	7' 3"	7' 3"	9' 7"	9' 7"	11' 11"	11' 11"	14' 0"	14' 0"	14' 0"	14' 0"
	SP DFL	#1	5' 4"	8' 5"	9' 1"	10' 0"	10' 9"	11' 11"	12' 10"	14' 0"	14' 0"	14' 0"	14' 0"
		#2	5' 3"	8' 5"	9' 1"	10' 0"	10' 9"	11' 11"	12' 10"	14' 0"	14' 0"	14' 0"	14' 0"
		#3	5' 0"	8' 5"	8' 5"	10' 0"	10' 6"	11' 11"	12' 6"	14' 0"	14' 0"	14' 0"	14' 0"
		STUD	5' 0"	8' 5"	8' 7"	10' 0"	10' 6"	11' 11"	12' 6"	14' 0"	14' 0"	14' 0"	14' 0"
		STANDARD	4' 11"	7' 5"	7' 5"	9' 10"	9' 10"	11' 11"	12' 3"	14' 0"	14' 0"	14' 0"	14' 0"

BRACING GROUP SPECIES AND GRADES:

GROUP A:

SPRUCE-PINE-FIR

#1 / #2	STANDARD
#3	STUD

HEM-FIR

#2	STUD
#3	STANDARD

DOUGLAS FIR-LARCH

#3
STUD
STANDARD

SOUTHERN PINE

#3
STUD
STANDARD

GROUP B:

HEM-FIR

#1 & BTR
#1

SOUTHERN PINE

#1
#2

DOUGLAS FIR-LARCH

#1
#2

GABLE TRUSS DETAIL NOTES:

LIVE LOAD DEFLECTION CRITERIA IS L/240.

PROVIDE UPLIFT CONNECTIONS FOR 80 PLF OVER CONTINUOUS BEARING (5 PSF TC DEAD LOAD).

GABLE END SUPPORTS LOAD FROM 4' 0" OUTLOOKERS WITH 2' 0" OVERHANG, OR 12" PLYWOOD OVERHANG.

ATTACH EACH "L" BRACE WITH 10d NAILS.
* FOR (1) "L" BRACE: SPACE NAILS AT 2" O.C. IN 18" END ZONES AND 4" O.C. BETWEEN ZONES.
** FOR (2) "L" BRACES: SPACE NAILS AT 3" O.C. IN 18" END ZONES AND 6" O.C. BETWEEN ZONES.

"L" BRACING MUST BE A MINIMUM OF 80% OF WEB MEMBER LENGTH.

GABLE VERTICAL PLATE SIZES

VERTICAL LENGTH	NO SPLICE
LESS THAN 4' 0"	1X4 OR 2X3
GREATER THAN 4' 0", BUT LESS THAN 11' 6"	2X4
GREATER THAN 11' 6"	2.5X4

\+ REFER TO COMMON TRUSS DESIGN FOR PEAK, SPLICE, AND HEEL PLATES.

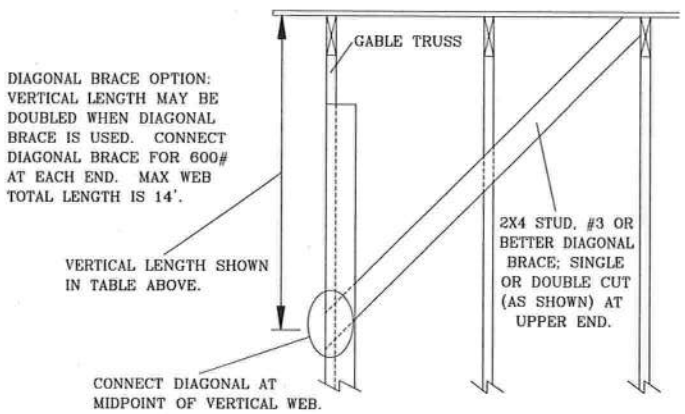

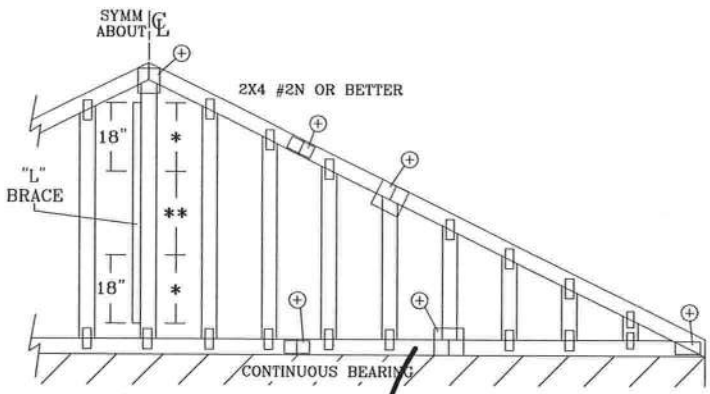

REFER TO CHART ABOVE FOR MAX GABLE VERTICAL LENGTH.

ALPINE

ALPINE ENGINEERED PRODUCTS, INC.
POMPANO BEACH, FLORIDA

WARNING TRUSSES REQUIRE EXTREME CARE IN FABRICATING, HANDLING, SHIPPING, INSTALLING AND BRACING. REFER TO BCSI 1-03 (BUILDING COMPONENT SAFETY INFORMATION), PUBLISHED BY TPI (TRUSS PLATE INSTITUTE, 583 D'ONOFRIO DR., SUITE 200, MADISON, WI. 53719) AND WTCA (WOOD TRUSS COUNCIL OF AMERICA, 6300 ENTERPRISE LN, MADISON, WI 53719) FOR SAFETY PRACTICES PRIOR TO PERFORMING THESE FUNCTIONS. UNLESS OTHERWISE INDICATED, TOP CHORD SHALL HAVE PROPERLY ATTACHED STRUCTURAL PANELS AND BOTTOM CHORD SHALL HAVE A PROPERLY ATTACHED RIGID CEILING.

IMPORTANT FURNISH COPY OF THIS DESIGN TO INSTALLATION CONTRACTOR. ALPINE ENGINEERED PRODUCTS, INC., SHALL NOT BE RESPONSIBLE FOR ANY DEVIATION FROM THIS DESIGN; ANY FAILURE TO BUILD THE TRUSS IN CONFORMANCE WITH TPI; OR FABRICATING, HANDLING, SHIPPING, INSTALLING & BRACING OF TRUSSES. DESIGN CONFORMS WITH APPLICABLE PROVISIONS OF NDS (NATIONAL DESIGN SPEC, BY AF&PA) AND TPI. ALPINE CONNECTOR PLATES ARE MADE OF 20/18/16GA (W,H/S/K) ASTM A653 GRADE 40/60 (W,K/H,S) GALV. STEEL. APPLY PLATES TO EACH FACE OF TRUSS AND, UNLESS OTHERWISE LOCATED ON THIS DESIGN, POSITION PER DRAWINGS 160A-Z. ANY INSPECTION OF PLATES FOLLOWED BY (I) SHALL BE PER ANNEX A3 OF TPI 1-2002 SEC. 3. A SEAL ON THIS DRAWING INDICATES ACCEPTANCE OF PROFESSIONAL ENGINEERING RESPONSIBILITY SOLELY FOR THE TRUSS COMPONENT DESIGN SHOWN. THE SUITABILITY AND USE OF THIS COMPONENT FOR ANY BUILDING IS THE RESPONSIBILITY OF THE BUILDING DESIGNER, PER ANSI/TPI 1 SEC. 2.

Dec

ARTHUR R. FISHER
LICENSE
No. 59687
STATE OF
FLORIDA
PROFESSIONAL ENGINEER

MAX. TOT. LD. 60 PSF

MAX. SPACING 24.0"

REF	ASCE7-98-GAB11015
DATE	11/26/03
DRWG	A11015EC1103
-ENG	

GABLE DETAIL
FOR LET-IN VERTICALS

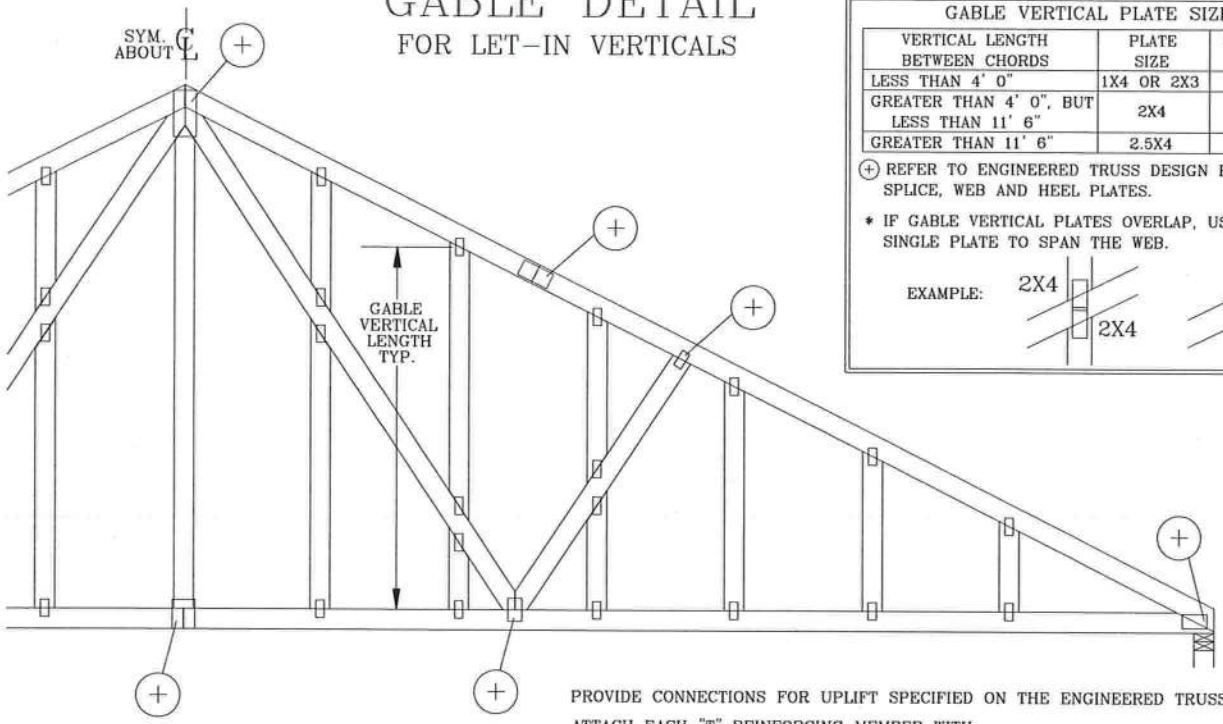

GABLE VERTICAL PLATE SIZES		
VERTICAL LENGTH BETWEEN CHORDS	PLATE SIZE	IF PLATES OVERLAP*
LESS THAN 4' 0"	1X4 OR 2X3	2X8
GREATER THAN 4' 0", BUT LESS THAN 11' 6"	2X4	2X8
GREATER THAN 11' 6"	2.5X4	2.5X8

(+) REFER TO ENGINEERED TRUSS DESIGN FOR PEAK, SPLICE, WEB AND HEEL PLATES.

* IF GABLE VERTICAL PLATES OVERLAP, USE A SINGLE PLATE TO SPAN THE WEB.

EXAMPLE:

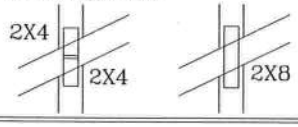

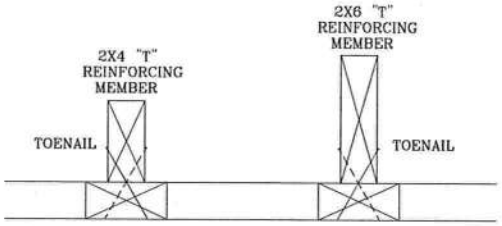

TO CONVERT FROM "L" TO "T" REINFORCING MEMBERS, MULTIPLY "T" FACTOR BY LENGTH (BASED ON GABLE VERTICAL SPECIES, GRADE AND SPACING) FOR (1) 2X4 "L" BRACE, GROUP A, OBTAINED FROM THE APPROPRIATE ALPINE GABLE DETAIL FOR ASCE OR SBCCI WIND LOAD.

MAXIMUM ALLOWABLE "T" REINFORCED GABLE VERTICAL LENGTH IS 14' FROM TOP TO BOTTOM CHORD.

WEB LENGTH INCREASE W/ "T" BRACE

WIND SPEED AND MRH	"T" REINF. MBR. SIZE	SBCCI	ASCE
110 MPH	2x4	10 %	10 %
15 FT	2x6	40 %	50 %
110 MPH	2x4	10 %	10 %
30 FT	2x6	50 %	50 %
100 MPH	2x4	10 %	10 %
15 FT	2x6	30 %	50 %
100 MPH	2x4	10 %	10 %
30 FT	2x6	40 %	40 %
90 MPH	2x4	20 %	10 %
15 FT	2x6	20 %	40 %
90 MPH	2x4	10 %	10 %
30 FT	2x6	30 %	50 %
80 MPH	2x4	10 %	20 %
15 FT	2x6	10 %	30 %
80 MPH	2x4	20 %	10 %
30 FT	2x6	20 %	40 %
70 MPH	2x4	0 %	20 %
15 FT	2x6	0 %	20 %
70 MPH	2x4	10 %	20 %
30 FT	2x6	10 %	30 %

EXAMPLE:
ASCE WIND SPEED = 100 MPH
MEAN ROOF HEIGHT = 30 FT
GABLE VERTICAL = 24" O.C. SP #3
"T" REINFORCING MEMBER SIZE = 2X4
"T" BRACE INCREASE (FROM ABOVE) = 10% = 1.10
(1) 2X4 "L" BRACE LENGTH = 6' 7"
MAXIMUM "T" REINFORCED GABLE VERTICAL LENGTH
1.10 x 6' 7" = 7' 3"

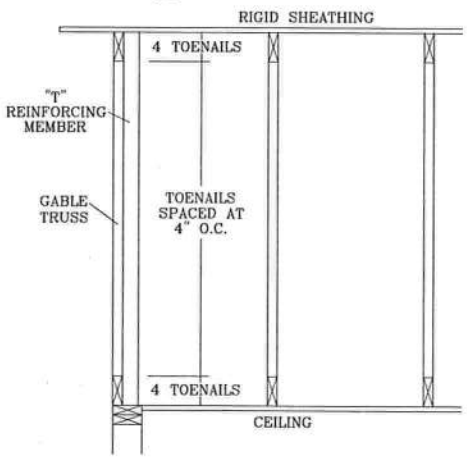

PROVIDE CONNECTIONS FOR UPLIFT SPECIFIED ON THE ENGINEERED TRUSS DESIGN.

ATTACH EACH "T" REINFORCING MEMBER WITH
HAND DRIVEN NAILS:
10d COMMON TOENAILS AT 4" O.C. PLUS (4) 16d COMMON TOENAILS IN TOP AND BOTTOM CHORD.
GUN DRIVEN NAILS - 0.131" X 3":
TOENAILS AT 4" O.C. PLUS (4) TOENAILS IN TOP AND BOTTOM CHORD.

THIS DETAIL TO BE USED WITH THE APPROPRIATE ALPINE GABLE DETAIL FOR ASCE OR SBCCI WIND LOAD.
ASCE 7-93 GABLE DETAIL DRAWINGS
A11015EN1103, A10015EN1103, A09015EN1103, A08015EN1103, A07015EN1103
A11030EN1103, A10030EN1103, A09030EN1103, A08030EN1103, A07030EN1103
ASCE 7-98 GABLE DETAIL DRAWINGS
A13015EC1103, A12015EC1103, A11015EC1103, A10015EC1103, A08515EC1103
A13030EC1103, A12030EC1103, A11030EC1103, A10030EC1103, A08530EC1103
SBCCI GABLE DETAIL DRAWINGS
S11015EN1103, S10015EN1103, S09015EN1103, S08015EN1103, S07015EN1103
S11030EN1103, S10030EN1103, S09030EN1103, S08030EN1103, S07030EN1103

SEE APPROPRIATE ALPINE GABLE DETAIL (ASCE OR SBCCI WIND LOAD) FOR MAXIMUM UNREINFORCED GABLE VERTICAL LENGTH.

THIS DRAWING REPLACES DRAWINGS GAB98117 876,719 & HC26294035

ALPINE
ALPINE ENGINEERED PRODUCTS, INC.
POMPANO BEACH, FLORIDA

WARNING TRUSSES REQUIRE EXTREME CARE IN FABRICATING, HANDLING, SHIPPING, INSTALLING AND BRACING. REFER TO BCSI 1-03 (BUILDING COMPONENT SAFETY INFORMATION), PUBLISHED BY TPI (TRUSS PLATE INSTITUTE, 583 D'ONOFRIO DR., SUITE 200, MADISON, WI. 53719) AND WTCA (WOOD TRUSS COUNCIL OF AMERICA, 6300 ENTERPRISE LN, MADISON, WI 53719) FOR SAFETY PRACTICES PRIOR TO PERFORMING THESE FUNCTIONS. UNLESS OTHERWISE INDICATED, TOP CHORD SHALL HAVE PROPERLY ATTACHED STRUCTURAL PANELS AND BOTTOM CHORD SHALL HAVE A PROPERLY ATTACHED RIGID CEILING.

IMPORTANT FURNISH COPY OF THIS DESIGN TO INSTALLATION CONTRACTOR. ALPINE ENGINEERED PRODUCTS, INC., SHALL NOT BE RESPONSIBLE FOR ANY DEVIATION FROM THIS DESIGN; ANY FAILURE TO BUILD THE TRUSS IN CONFORMANCE WITH TPI; OR FABRICATING, HANDLING, SHIPPING, INSTALLING & BRACING OF TRUSSES. DESIGN CONFORMS WITH APPLICABLE PROVISIONS OF NDS (NATIONAL DESIGN SPEC, BY AF&PA) AND TPI. ALPINE CONNECTOR PLATES ARE MADE OF 20/18/16GA (W,H/S/K) ASTM A653 GRADE 40/60 (W,K/H,S) GALV. STEEL. APPLY PLATES TO EACH FACE OF TRUSS AND, UNLESS OTHERWISE LOCATED ON THIS DESIGN, POSITION PER DRAWINGS 160A-Z. ANY INSPECTION OF PLATES FOLLOWED BY (1) SHALL BE PER ANNEX A3 OF TPI 1-2002 SEC. 3. A SEAL ON THIS DRAWING INDICATES ACCEPTANCE OF PROFESSIONAL ENGINEERING RESPONSIBILITY SOLELY FOR THE TRUSS COMPONENT DESIGN SHOWN. THE SUITABILITY AND USE OF THIS COMPONENT FOR ANY BUILDING IS THE RESPONSIBILITY OF THE BUILDING DESIGNER, PER ANSI/TPI 1 SEC. 2.

Dec 20

ARTHUR R. FISHER
LICENSE
No. 59687
STATE OF FLORIDA
PROFESSIONAL ENGINEER

MAX TOT. LD. 60 PSF
DUR. FAC. ANY
MAX SPACING 24.0"

REF	LET-IN VERT
DATE	01/16/04
DRWG	GBLLETIN1103
-ENG	DLJ/KAR

Alpine Engineered Products, Inc.

1950 Marley Drive Haines City, FL 33844
Florida Engineering Certificate of Authorization Number: 567
Florida Certificate of Product Approval # FL1999
 Document ID:1SWW487-Z0204095555

#23684

Truss Fabricator:	Anderson Truss Company
Job Identification:	5-286-ED & KIM CARTER
Truss Count:	1
Model Code:	Florida Building Code
Truss Criteria:	ANSI/TPI-2002(STD)/FBC
Engineering Software:	Alpine Software,Version 7.24.
Structural Engineer of Record:	The identity of the structural EOR did not exist as of
Address:	the seal date per section 61G15-31.003(5a) of the FAC
Minimum Design Loads:	Roof - 40.0 PSF @ 1.25 Duration
	Floor - N/A
	Wind - 110 MPH ASCE 7-98 -Closed

Seal Date: 05/04/2006

-Truss Design Engineer-
Arthur R. Fisher
Florida License Number: 59687
1950 Marley Drive
Haines City, FL 33844

Notes:

1. Determination as to the suitability of these truss components for the structure is the responsibility of the building designer/engineer of record, as defined in ANSI/TPI 1
2. The drawing date shown on this index sheet must match the date shown on the individual truss component drawing.
3. As shown on attached drawings; the drawing number is preceded by: HCUSR487

Details: MAX DEAD LOAD-BRCLBSUB-

#	Ref	Description	Drawing#	Date
1	81071--AV		06124013	05/04/06

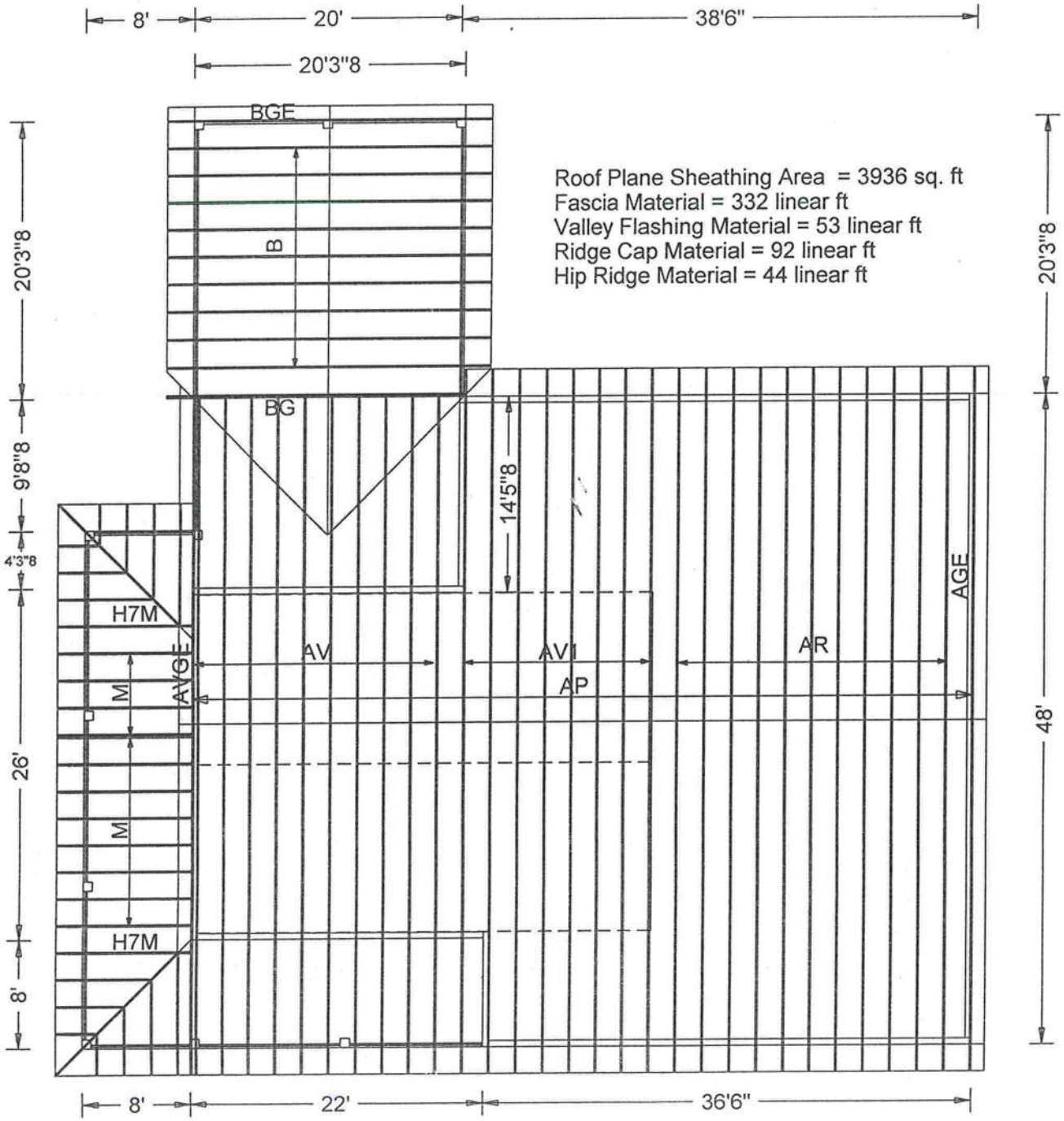

Roof Plane Sheathing Area = 3936 sq. ft
Fascia Material = 332 linear ft
Valley Flashing Material = 53 linear ft
Ridge Cap Material = 92 linear ft
Hip Ridge Material = 44 linear ft

H 755-9406
Kim @ wk 352-316-0905

ED & KIM CARTER

JOB LOCATION:

JOB DESCRIPTION: ED & KIM CARTER

DESIGNED BY:

JOB NO: 5-286

PAGE NO: 1 OF 1

Top chord 2x6 SP #1 Dense :T1, T5 2x4 SP #2 Dense:
Bot chord 2x6 SP #1 Dense
Webs 2x4 SP #3

Dead loads are stated on projected horizontal area basis.

(A) Continuous lateral bracing equally spaced on member.

Deflection meets L/360 live and L/240 total load. Creep increase factor for dead load is 1.50.

110 mph wind, 15.00 ft mean hgt, ASCE 7-98, CLOSED bldg, not located within 6.50 ft from roof edge, CAT II, EXP B, wind TC DL=2.8 psf, wind BC DL=2.2 psf.

H = recommended connection based on manufacturer tested capacities and calculations. Conditions may exist that require different connections than indicated. Refer to manufacturer publication for additional information.

WARNING: Furnish a copy of this DWG to the installation contractor. Special care must be taken during handling, shipping and installation of trusses. See "WARNING" note below.

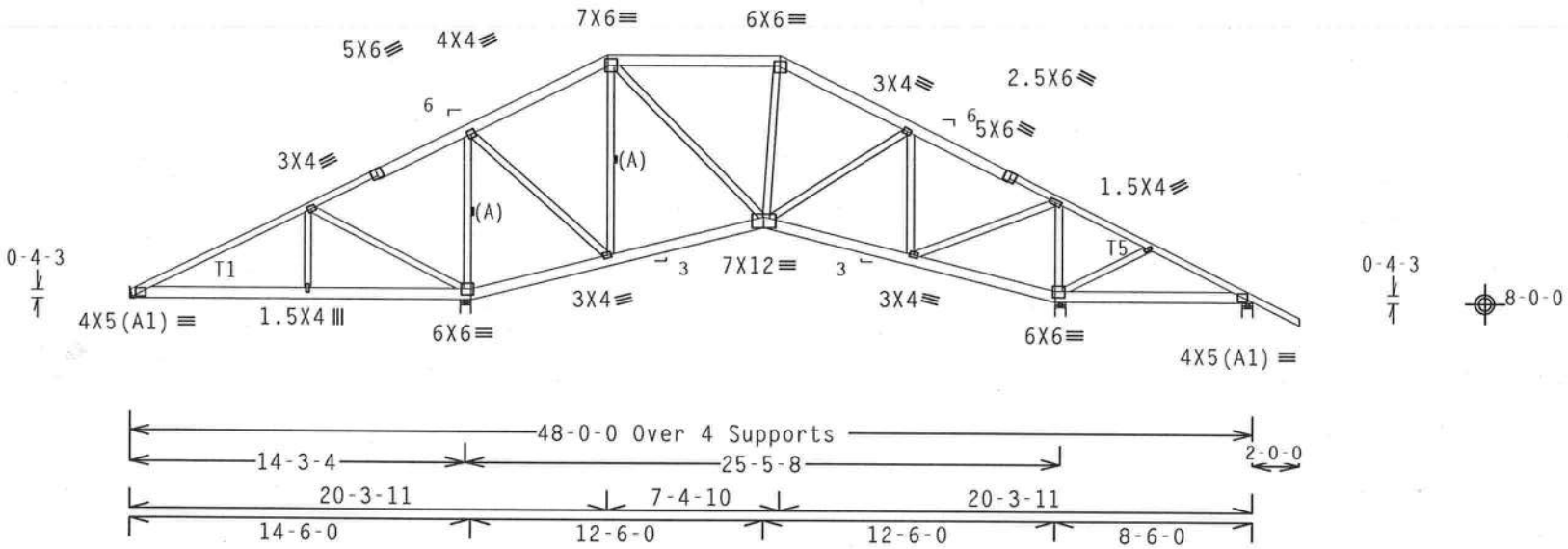

Design Crit: TPI-2002(STD)/FBC

PLT TYP. Wave

Cq/RT=1.00(1.25)/10(0) 7.24.1 QTY:10 FL/-/4/-/-/R/- Scale =.125"/Ft.

ALPINE

Alpine Engineered Products, Inc.
1950 Marley Drive
Haines City, FL 33844
FL Certificate of Authorization # 567

WARNING TRUSSES REQUIRE EXTREME CARE IN FABRICATION, HANDLING, SHIPPING, INSTALLING AND BRACING. REFER TO BCSI 1-03 (BUILDING COMPONENT SAFETY INFORMATION), PUBLISHED BY TPI (TRUSS PLATE INSTITUTE, 583 D'ONOFRIO DR., SUITE 200, MADISON, WI 53719) AND WTCA (WOOD TRUSS COUNCIL OF AMERICA, 6300 ENTERPRISE LN, MADISON, WI 53719) FOR SAFETY PRACTICES PRIOR TO PERFORMING THESE FUNCTIONS. UNLESS OTHERWISE INDICATED, TOP CHORD SHALL HAVE PROPERLY ATTACHED STRUCTURAL PANELS AND BOTTOM CHORD SHALL HAVE A PROPERLY ATTACHED RIGID CEILING.

IMPORTANT FURNISH A COPY OF THIS DESIGN TO THE INSTALLATION CONTRACTOR. ALPINE ENGINEERED PRODUCTS, INC. SHALL NOT BE RESPONSIBLE FOR ANY DEVIATION FROM THIS DESIGN; ANY FAILURE TO BUILD THE TRUSS IN CONFORMANCE WITH TPI; OR FABRICATING, HANDLING, SHIPPING, INSTALLING & BRACING OF TRUSSES. DESIGN CONFORMS WITH APPLICABLE PROVISIONS OF NDS (NATIONAL DESIGN SPEC, BY AF&PA) AND TPI. ALPINE CONNECTOR PLATES ARE MADE OF 20/18/16GA (W,H/S/K) ASTM A653 GRADE 40/60 (W, K/H,S) GALV. STEEL. APPLY PLATES TO EACH FACE OF TRUSS AND, UNLESS OTHERWISE LOCATED ON THIS DESIGN, POSITION PER DRAWINGS 160A-2. ANY INSPECTION OF PLATES FOLLOWED BY (1) SHALL BE PER ANNEX A3 OF TPI1-2002 SEC.3. A SEAL ON THIS DRAWING INDICATES ACCEPTANCE OF PROFESSIONAL ENGINEERING RESPONSIBILITY SOLELY FOR THE TRUSS COMPONENT DESIGN SHOWN. THE SUITABILITY AND USE OF THIS COMPONENT FOR ANY BUILDING IS THE RESPONSIBILITY OF THE BUILDING DESIGNER PER ANSI/TPI 1 SEC. 2.

ARTHUR R. FISHER
LICENSE
No. 59687
STATE OF FLORIDA
PROFESSIONAL ENGINEER

May 04 '06

TC LL	20.0 PSF	REF R487-- 81071
TC DL	10.0 PSF	DATE 05/04/06
BC DL	10.0 PSF	DRW HCUSR487 06124013
BC LL	0.0 PSF	HC-ENG JB/AF
TOT.LD.	40.0 PSF	SEQN- 167050 REV
DUR.FAC.	1.25	
SPACING	24.0"	JREF- 1SWW487_Z02

CLB WEB BRACE SUBSTITUTION

THIS DETAIL IS TO BE USED WHEN CONTINUOUS LATERAL BRACING (CLB) IS SPECIFIED ON AN ALPINE TRUSS DESIGN BUT AN ALTERNATIVE WEB BRACING METHOD IS DESIRED.

NOTES:

THIS DETAIL IS ONLY APPLICABLE FOR CHANGING THE SPECIFIED CLB SHOWN ON SINGLE PLY SEALED DESIGNS TO T-BRACING OR SCAB BRACING.

ALTERNATIVE BRACING SPECIFIED IN CHART BELOW MAY BE CONSERVATIVE. FOR MINIMUM ALTERNATIVE BRACING, RE-RUN DESIGN WITH APPROPRIATE BRACING.

WEB MEMBER SIZE	SPECIFIED CLB BRACING	ALTERNATIVE BRACING T OR L-BRACE	ALTERNATIVE BRACING SCAB BRACE
2X3 OR 2X4	1 ROW	2X4	1-2X4
2X3 OR 2X4	2 ROWS	2X6	2-2X4
2X6	1 ROW	2X4	1-2X6
2X6	2 ROWS	2X6	2-2X4(*)
2X8	1 ROW	2X6	1-2X8
2X8	2 ROWS	2X6	2-2X6(*)

T-BRACE, L-BRACE AND SCAB BRACE TO BE SAME SPECIES AND GRADE OR BETTER THAN WEB MEMBER UNLESS SPECIFIED OTHERWISE ON ENGINEER'S SEALED DESIGN.

(*) CENTER SCAB ON WIDE FACE OF WEB. APPLY (1) SCAB TO EACH FACE OF WEB.

T-BRACING OR L-BRACING:

APPLY TO EITHER SIDE OF WEB NARROW FACE

ATTACH WITH 16d NAILS AT 6" O.C.

BRACE IS A MINIMUM 80% OF WEB MEMBER LENGTH

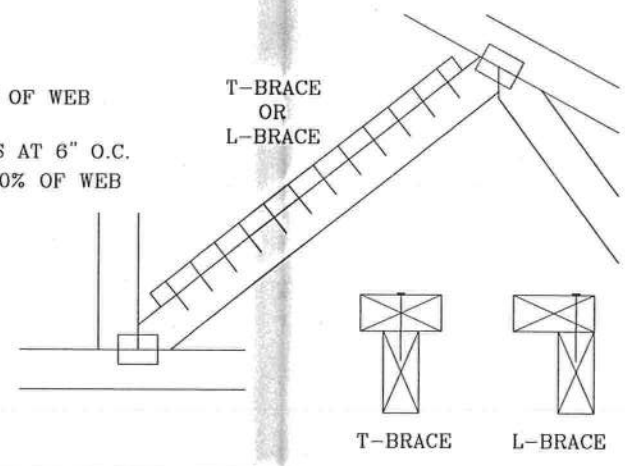

SCAB BRACING:

APPLY SCAB(S) TO WIDE FACE OF WEB.

NO MORE THAN (1) SCAB PER FACE.

ATTACH WITH 10d OR .128"x3" GUN NAILS AT 6" O.C. BRACE IS A MINIMUM 80% OF WEB MEMBER LENGTH

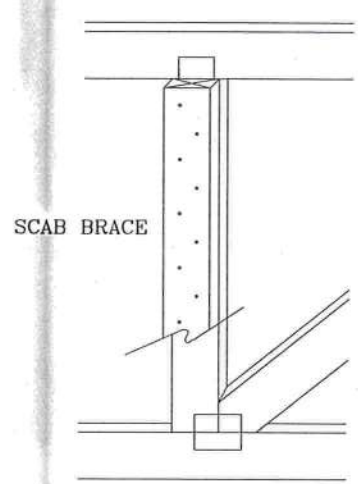

THIS DRAWING REPLACES DRAWING 579,640

ALPINE

ALPINE ENGINEERED PRODUCTS, INC.
POMPANO BEACH, FLORIDA

WARNING TRUSSES REQUIRE EXTREME CARE IN FABRICATING, HANDLING, SHIPPING, INSTALLING AND BRACING. REFER TO BCSI 1-03 (BUILDING COMPONENT SAFETY INFORMATION), PUBLISHED BY TPI (TRUSS PLATE INSTITUTE, 583 D'ONOFRIO DR., SUITE 200, MADISON, WI. 53719) AND WTCA (WOOD TRUSS COUNCIL OF AMERICA, 6300 ENTERPRISE LN, MADISON, WI 53719) FOR SAFETY PRACTICES PRIOR TO PERFORMING THESE FUNCTIONS. UNLESS OTHERWISE INDICATED, TOP CHORD SHALL HAVE PROPERLY ATTACHED STRUCTURAL PANELS AND BOTTOM CHORD SHALL HAVE A PROPERLY ATTACHED RIGID CEILING.

IMPORTANT FURNISH COPY OF THIS DESIGN TO INSTALLATION CONTRACTOR. ALPINE ENGINEERED PRODUCTS, INC., SHALL NOT BE RESPONSIBLE FOR ANY DEVIATION FROM THIS DESIGN; ANY FAILURE TO BUILD THE TRUSS IN CONFORMANCE WITH TPI; OR FABRICATING, HANDLING, SHIPPING, INSTALLING & BRACING OF TRUSSES. DESIGN CONFORMS WITH APPLICABLE PROVISIONS OF NDS (NATIONAL DESIGN SPEC, BY AF&PA) AND TPI. ALPINE CONNECTOR PLATES ARE MADE OF 20/18/16GA (W,H/S/K) ASTM A653 GRADE 40/60 (W,K/H,S) GALV. STEEL. APPLY PLATES TO EACH FACE OF TRUSS AND, UNLESS OTHERWISE LOCATED ON THIS DESIGN, POSITION PER DRAWINGS 160A-Z. ANY INSPECTION OF PLATES FOLLOWED BY (I) SHALL BE PER ANNEX A3 OF TPI 1-2002 SEC. 3. A SEAL ON THIS DRAWING INDICATES ACCEPTANCE OF PROFESSIONAL ENGINEERING RESPONSIBILITY SOLELY FOR THE TRUSS COMPONENT DESIGN SHOWN. THE SUITABILITY AND USE OF THIS COMPONENT FOR ANY BUILDING IS THE RESPONSIBILITY OF THE BUILDING DESIGNER, PER ANSI/TPI 1 SEC. 2.

ARTHUR R. FISHER
LICENSE
No. 59687
STATE OF
FLORIDA
PROFESSIONAL ENGINEER

TC LL	PSF	
TC DL	PSF	
BC DL	PSF	
BC LL	PSF	
TOT. LD.	PSF	
DUR. FAC.		
SPACING		

REF	CLB SUBST.
DATE	11/26/03
DRWG	BRCLBSUB1103
-ENG	MLH/KAR

CERTIFICATE OF

OCCUPANCY

COLUMBIA COUNTY, FLORIDA

Department of Building and Zoning Inspection

This Certificate of Occupancy is issued to the below named permit holder for the building and premises at the below named location, and certifies that the work has been completed in accordance with the Columbia County Building Code.

Parcel Number 17-6S-17-09693-004

Building permit No. 000023684

Use Classification SFD,UTILITY

Fire: 0.00

Permit Holder DONNIE DAVIS

Waste: 0.00

Owner of Building GENE CARTER

Total: 0.00

Location: 775 SW JIM WARD ST, FT. WHITE, FL

Date: 09/12/2007

Building Inspector

POST IN A CONSPICUOUS PLACE
(Business Places Only)

LEGACY
ENGINEERING, INC

Geotechnical & Materials Engineering and Testing

LEGACY ENGINEERING, INC
6424 BEACH BOULVARD
JACKSONVILLE, FL 32216

904-721-1100 OFFICE
904-722-1100 FAX

#23684

Project No.: _____
Report No.: _____
Lab No.: _____

FIELD REPORT

Page 1 of 1

Report Of: Hand Cone Penetrometer
Project: 775 S.W. Jim Ward St.
Contractor: Ed Carter
Reported To: " " Location by: _____
Location: Continuous Footings
Date: 12-9-05

The Following was Noted:

On this date a representative from Legacy Engineering was onsite to perform Hand Cone Penetrometer in the area of the West Porch. There is one area of loose clayey soil 20' North of the S.W. Corner. This area is 24" long and 18" in depth. It is recommended this area is removed and poured back with concrete, or backfilled with suitable material.

Copies To:

Signed: [signature]

Standby Approval

Superintendent Printed Name

Superintendent Signature

Billing Comments _____

white copy - office use *yellow copy - personal use* *pink copy - client use* *office use*

A.C.E.HEAT AND AIR,INC
Air Conditioning Experts

Right-J Worksheet
Entire House
A.C.E. HEAT AND AIR

Job: Clark
Date: Jul 07, 2005
By: SARA

7196 SW US HWY 27, FORT WHITE, FL 32038 Phone: 386-497-2216 Fax: 386-497-1158 Email: aceheatandair@yahoo,.com Web: aceheatandairinc.com

		Entire House	kitch/den
1	Room name	Entire House	kitch/den
2	Exposed wall	210.0 ft	69.0 ft
3	Ceiling height	11.1 ft d	12.3 ft heat/cool
4	Room dimensions		20.0 x 29.0 ft
5	Room area	2356.0 ft²	580.0 ft²

	Ty	Construction number	U-value (Btuh/ft²-°F)	Or	HTM (Btuh/ft²) Heat	HTM (Btuh/ft²) Cool	Area (ft²) or perimeter (ft) Gross	Area (ft²) or perimeter (ft) N/P/S	Load (Btuh) Heat	Load (Btuh) Cool	Area (ft²) or perimeter (ft) Gross	Area (ft²) or perimeter (ft) N/P/S	Load (Btuh) Heat	Load (Btuh) Cool
6	W	12E-0sw	0.068	n	2.52	1.36	480	450	1132	614	0	0	0	0
.	G	1A-c1ob	1.080	n	39.96	33.97	30	0	1199	1019	0	0	0	0
.	W	12E-0sw	0.068	e	2.52	1.36	570	449	1130	612	200	139	350	190
.	G	1A-c1ob	1.080	e	39.96	90.34	100	0	3996	9034	40	0	1598	3613
11	D	11B0	0.300	e	11.10	8.74	21	21	233	184	21	21	233	184
	W	12E-0sw	0.068	s	2.52	1.36	480	401	1009	547	290	256	644	349
	G	1A-c1ob	1.080	s	39.96	38.93	79	0	3157	3075	34	0	1359	1323
	W	12E-0sw	0.068	w	2.52	1.36	570	436	1097	594	200	179	450	244
	G	1A-c1ob	1.080	w	39.96	90.34	50	0	1998	4517	0	0	0	0
	D	11B0	0.300	w	11.10	8.74	84	84	932	735	21	21	233	184
	C	16B-30ad	0.032	-	1.18	1.68	1207	1207	1429	2034	0	0	0	0
	C	17B-6al	0.105	-	3.88	4.58	1472	1472	5718	6745	708	708	2752	3246
	F	22C-5tph	1.266	-	46.84	0.00	2356	210	9837	0	580	69	3232	0

6	c) AED excursion									0				-791
	Envelope loss/gain								32867	29709			10851	8542
12	a) Infiltration								3890	894			1278	294
	b) Room ventilation								0	0			0	0
13	Internal gains:	Occupants @	230				4			920	0			0
		Appliances @	1200				3			3600	3			3600
	Less external load								0	0			0	0
	Less transfer								0	0			0	0
	Redistribution								0	0			0	0
14	Subtotal								36757	35123			12130	12436
15	Duct loads						36%	46%	13267	16217	36%	46%	4378	5742
	Total room load								50024	51340			16508	18177
	Air required (cfm)								2126	2126			702	753

Printout certified by ACCA to meet all requirements of Manual J 8th Ed.

A.C.E.HEAT AND AIR,INC
Air Conditioning Experts

Right-J Worksheet
Entire House
A.C.E. HEAT AND AIR

Job: Clark
Date: Jul 07, 2005
By: SARA

7196 SW US HWY 27, FORT WHITE, FL 32038 Phone: 386-497-2216 Fax: 386-497-1158 Email: aceheatandair@yahoo,.com Web: aceheatandairinc.com

		BED2	GREAT
1	Room name	BED2	GREAT
2	Exposed wall	19.0 ft	0.0 ft
3	Ceiling height	10.0 ft heat/cool	11.7 ft heat/cool
4	Room dimensions	14.0 x 14.0 ft	1.0 x 365.0 ft
5	Room area	196.0 ft²	365.0 ft²

	Ty	Construction number	U-value (Btuh/ft²-°F)	Or	HTM (Btuh/ft²) Heat	HTM (Btuh/ft²) Cool	Area (ft²) or perimeter (ft) Gross	Area (ft²) or perimeter (ft) N/P/S	Load (Btuh) Heat	Load (Btuh) Cool	Area (ft²) or perimeter (ft) Gross	Area (ft²) or perimeter (ft) N/P/S	Load (Btuh) Heat	Load (Btuh) Cool
6	W	12E-0sw	0.068	n	2.52	1.36	0	0	0	0	0	0	0	0
.	G	1A-c1ob	1.080	n	39.96	33.97	0	0	0	0	0	0	0	0
.	W	12E-0sw	0.068	e	2.52	1.36	140	110	277	150	0	0	0	0
.	G	1A-c1ob	1.080	e	39.96	90.34	30	0	1199	2710	0	0	0	0
11	D	11B0	0.300	e	11.10	8.74	0	0	0	0	0	0	0	0
	W	12E-0sw	0.068	s	2.52	1.36	50	50	126	68	0	0	0	0
	G	1A-c1ob	1.080	s	39.96	38.93	0	0	0	0	0	0	0	0
	W	12E-0sw	0.068	w	2.52	1.36	0	0	0	0	0	0	0	0
	G	1A-c1ob	1.080	w	39.96	90.34	0	0	0	0	0	0	0	0
	D	11B0	0.300	w	11.10	8.74	0	0	0	0	0	0	0	0
	C	16B-30ad	0.032	-	1.18	1.68	196	196	232	330	85	85	101	143
	C	17B-6al	0.105	-	3.88	4.58	0	0	0	0	376	376	1461	1723
	F	22C-5tph	1.266	-	46.84	0.00	196	19	890	0	365	0	0	0

6	c) AED excursion									94				-112
	Envelope loss/gain								2723	3353			1562	1755
12	a) Infiltration								352	81			0	0
	b) Room ventilation								0	0			0	0
13	Internal gains:	Occupants @	230				1			230	0			0
		Appliances @	1200				0			0	0			0
	Less external load								0	0			0	0
	Less transfer								0	0			0	0
	Redistribution								0	0			0	0
14	Subtotal								3075	3664			1562	1755
15	Duct loads						36%	46%	1110	1692	36%	46%	564	810
	Total room load								4185	5356			2125	2565
	Air required (cfm)								178	222			90	106

Printout certified by ACCA to meet all requirements of Manual J 8th Ed.

A.C.E.HEAT AND AIR,INC
Air Conditioning Experts

Right-J Worksheet
Entire House
A.C.E. HEAT AND AIR

Job: Clark
Date: Jul 07, 2005
By: SARA

7196 SW US HWY 27, FORT WHITE, FL 32038 Phone: 386-497-2216 Fax: 386-497-1158 Email: aceheatandair@yahoo,.com Web: aceheatandairinc.com

		UTILITY	BED3
1	Room name	UTILITY	BED3
2	Exposed wall	40.0 ft	26.0 ft
3	Ceiling height	10.0 ft heat/cool	10.0 ft heat/cool
4	Room dimensions	6.0 x 34.0 ft	12.0 x 14.0 ft
5	Room area	204.0 ft²	168.0 ft²

	Ty	Construction number	U-value (Btuh/ft²-°F)	Or	HTM (Btuh/ft²) Heat	HTM (Btuh/ft²) Cool	Area (ft²) or perimeter (ft) Gross	Area N/P/S	Load (Btuh) Heat	Load (Btuh) Cool	Area (ft²) or perimeter (ft) Gross	Area N/P/S	Load (Btuh) Heat	Load (Btuh) Cool
6	W	12E-0sw	0.068	n	2.52	1.36	340	310	780	423	140	140	352	191
.	G	1A-c1ob	1.080	n	39.96	33.97	30	0	1199	1019	0	0	0	0
.	W	12E-0sw	0.068	e	2.52	1.36	0	0	0	0	120	90	226	123
.	G	1A-c1ob	1.080	e	39.96	90.34	0	0	0	0	30	0	1199	2710
11	D	11B0	0.300	e	11.10	8.74	0	0	0	0	0	0	0	0
	W	12E-0sw	0.068	s	2.52	1.36	0	0	0	0	0	0	0	0
	G	1A-c1ob	1.080	s	39.96	38.93	0	0	0	0	0	0	0	0
	W	12E-0sw	0.068	w	2.52	1.36	60	39	98	53	0	0	0	0
	G	1A-c1ob	1.080	w	39.96	90.34	0	0	0	0	0	0	0	0
	D	11B0	0.300	w	11.10	8.74	21	21	233	184	0	0	0	0
	C	16B-30ad	0.032	-	1.18	1.68	204	204	242	344	168	168	199	283
	C	17B-6al	0.105	-	3.88	4.58	0	0	0	0	0	0	0	0
	F	22C-5tph	1.266	-	46.84	0.00	204	40	1874	0	168	26	1218	0

6	c) AED excursion									-131				90
	Envelope loss/gain								4425	1891			3194	3397
12	a) Infiltration								741	170			482	111
	b) Room ventilation								0	0			0	0
13	Internal gains:	Occupants @	230				0			0	1			230
		Appliances @	1200				0			0	0			0
	Less external load								0	0			0	0
	Less transfer								0	0			0	0
	Redistribution								0	0			0	0
14	Subtotal								5166	2061			3676	3737
15	Duct loads						36%	46%	1865	952	36%	46%	1327	1726
	Total room load								7031	3013			5003	5463
	Air required (cfm)								299	125			213	226

Printout certified by ACCA to meet all requirements of Manual J 8th Ed.

A.C.E.HEAT AND AIR,INC
Air Conditioning Experts

Right-J Worksheet
Entire House
A.C.E. HEAT AND AIR

Job: Clark
Date: Jul 07, 2005
By: SARA

7196 SW US HWY 27, FORT WHITE, FL 32038 Phone: 386-497-2216 Fax: 386-497-1158 Email: aceheatandair@yahoo,.com Web: aceheatandairinc.com

		sunRoom	master
1	Room name	sunRoom	master
2	Exposed wall	28.0 ft	17.0 ft
3	Ceiling height	10.0 ft heat/cool	12.3 ft heat/cool
4	Room dimensions	14.0 x 14.0 ft	17.0 x 17.0 ft
5	Room area	196.0 ft²	289.0 ft²

	Ty	Construction number	U-value (Btuh/ft²-°F)	Or	HTM (Btuh/ft²) Heat	HTM (Btuh/ft²) Cool	Area (ft²) or perimeter (ft) Gross	Area N/P/S	Load (Btuh) Heat	Load (Btuh) Cool	Area (ft²) or perimeter (ft) Gross	Area N/P/S	Load (Btuh) Heat	Load (Btuh) Cool
6	W	12E-0sw	0.068	n	2.52	1.36	0	0	0	0	0	0	0	0
.	G	1A-c1ob	1.080	n	39.96	33.97	0	0	0	0	0	0	0	0
.	W	12E-0sw	0.068	e	2.52	1.36	0	0	0	0	0	0	0	0
.	G	1A-c1ob	1.080	e	39.96	90.34	0	0	0	0	0	0	0	0
11	D	11B0	0.300	e	11.10	8.74	0	0	0	0	0	0	0	0
	W	12E-0sw	0.068	s	2.52	1.36	140	95	239	130	0	0	0	0
	G	1A-c1ob	1.080	s	39.96	38.93	45	0	1798	1752	0	0	0	0
	W	12E-0sw	0.068	w	2.52	1.36	140	78	196	106	170	140	352	191
	G	1A-c1ob	1.080	w	39.96	90.34	20	0	799	1807	30	0	1199	2710
	D	11B0	0.300	w	11.10	8.74	42	42	466	367	0	0	0	0
	C	16B-30ad	0.032	-	1.18	1.68	196	196	232	330	0	0	0	0
	C	17B-6al	0.105	-	3.88	4.58	0	0	0	0	387	387	1505	1776
	F	22C-5tph	1.266	-	46.84	0.00	196	28	1312	0	289	17	796	0

6	c) AED excursion									21				877
	Envelope loss/gain								5043	4513			3852	5553
12	a) Infiltration								519	119			315	72
	b) Room ventilation								0	0			0	0
13	Internal gains:	Occupants @	230				0			0	2			460
		Appliances @	1200				0			0	0			0
	Less external load								0	0			0	0
	Less transfer								0	0			0	0
	Redistribution								0	0			0	0
14	Subtotal								5561	4632			4167	6085
15	Duct loads						36%	46%	2007	2139	36%	46%	1504	2810
	Total room load								7568	6771			5671	8895
	Air required (cfm)								322	280			241	368

Printout certified by ACCA to meet all requirements of Manual J 8th Ed.

A.C.E.HEAT AND AIR,INC
Air Conditioning Experts

Right-J Worksheet
Entire House
A.C.E. HEAT AND AIR

Job: Clark
Date: Jul 07, 2005
By: SARA

7196 SW US HWY 27, FORT WHITE, FL 32038 Phone: 386-497-2216 Fax: 386-497-1158 Email: aceheatandair@yahoo,.com Web: aceheatandairinc.com

		MASTER BATH	BATH
1	Room name	0.0 ft	11.0 ft
2	Exposed wall	10.0 ft heat/cool	10.0 ft heat/cool
3	Ceiling height	17.0 x 12.0 ft	11.0 x 14.0 ft
4	Room dimensions	204.0 ft²	154.0 ft²
5	Room area		

	Ty	Construction number	U-value (Btuh/ft²-°F)	Or	HTM (Btuh/ft²) Heat	HTM (Btuh/ft²) Cool	Area (ft²) or perimeter (ft) Gross	Area N/P/S	Load (Btuh) Heat	Load (Btuh) Cool	Area (ft²) or perimeter (ft) Gross	Area N/P/S	Load (Btuh) Heat	Load (Btuh) Cool
6	W	12E-0sw	0.068	n	2.52	1.36	0	0	0	0	0	0	0	0
.	G	1A-c1ob	1.080	n	39.96	33.97	0	0	0	0	0	0	0	0
.	W	12E-0sw	0.068	e	2.52	1.36	0	0	0	0	110	110	277	150
.	G	1A-c1ob	1.080	e	39.96	90.34	0	0	0	0	0	0	0	0
11	D	11B0	0.300	e	11.10	8.74	0	0	0	0	0	0	0	0
	W	12E-0sw	0.068	s	2.52	1.36	0	0	0	0	0	0	0	0
	G	1A-c1ob	1.080	s	39.96	38.93	0	0	0	0	0	0	0	0
	W	12E-0sw	0.068	w	2.52	1.36	0	0	0	0	0	0	0	0
	G	1A-c1ob	1.080	w	39.96	90.34	0	0	0	0	0	0	0	0
	D	11B0	0.300	w	11.10	8.74	0	0	0	0	0	0	0	0
	C	16B-30ad	0.032	-	1.18	1.68	204	204	242	344	154	154	182	259
	C	17B-6al	0.105	-	3.88	4.58	0	0	0	0	0	0	0	0
	F	22C-5tph	1.266	-	46.84	0.00	204	0	0	0	154	11	515	0

6	c) AED excursion									-21				-27
	Envelope loss/gain								242	323			974	382
12	a) Infiltration								0	0			204	47
	b) Room ventilation								0	0			0	0
13	Internal gains:	Occupants @	230				0			0	0			0
		Appliances @	1200				0			0	0			0
	Less external load								0	0			0	0
	Less transfer								0	0			0	0
	Redistribution								0	0			0	0
14	Subtotal								242	323			1178	429
15	Duct loads						36%	46%	87	149	36%	46%	425	198
	Total room load								329	472			1603	627
	Air required (cfm)								14	20			68	26

Printout certified by ACCA to meet all requirements of Manual J 8th Ed.

Alpine Engineered Products, Inc.

1950 Marley Drive Haines City, FL 33844
Florida Engineering Certificate of Authorization Number: 567
Florida Certificate of Product Approval # FL1999
 Document ID:1SOI487-Z0306095352

Truss Fabricator: Anderson Truss Company
Job Identification: 5-286-ED & KIM CARTER
Truss Count: 18
Model Code: Florida Building Code 2001
Truss Criteria: ANSI/TPI-1995;ANSI/TPI-1995(STD)/FBC
Engineering Software: Alpine Software,Version 7.04.
Structural Engineer of Record:
Address:
Minimum Design Loads: Roof - 40.0 PSF @ 1.25 Duration
Floor - N/A
Wind - 110 MPH ASCE 7-98 -Closed

Seal Date: 07/06/2005

-Truss Design Engineer-
Arthur R. Fisher
Florida License Number: 59687
1950 Marley Drive
Haines City, FL 33844

Notes:

1. Determination as to the suitability of these truss components for the structure is the responsibility of the building designer/engineer of record, as defined in ANSI/TPI 1-1995 Section 2.2
2. The drawing date shown on this index sheet must match the date shown on the individual truss component drawing.
3. As shown on attached drawings; the drawing number is preceded by: HCUSR487

Details: BRCLBSUB-A11015EC-GBLLETIN

#	Ref Description	Drawing#	Date
1	41629--A	05187008	07/06/05
2	41630--AGE	05187009	07/06/05
3	41631--AVGE	05187022	07/06/05
4	41632--AR	05187010	07/06/05
5	41633--AT	05187011	07/06/05
6	41634--AV1	05187012	07/06/05
7	41635--AV	05187013	07/06/05
8	41636--H7B	05187014	07/06/05
9	41637--H9B	05187006	07/06/05
10	41638--BG	05187023	07/06/05
11	41639--CJ5	05187015	07/06/05
12	41640--HJ7	05187016	07/06/05
13	41641--CJ3	05187017	07/06/05
14	41642--CJ1	05187018	07/06/05
15	41643--EJ7	05187019	07/06/05
16	41644--H7M	05187020	07/06/05
17	41645--M	05187007	07/06/05
18	41646--AP	05187021	07/06/05

THIS DWG PREPARED FROM COMPUTER INPUT (LOADS & DIMENSIONS)

36-ED & KIM CARTER - A)

chord 2x6 SP #1 Dense :T1, T5 2x4 SP #2 Dense:
chord 2x6 SP #1 Dense
Webs 2x4 SP #3

Continuous lateral bracing equally spaced on member.

NING: Furnish a copy of this DWG to the installation contractor.
cial care must be taken during handling, shipping and installation of
sses. See "WARNING" note below.

110 mph wind, 12.92 ft mean hgt, ASCE 7-98, CLOSED bldg, not located within 6.50 ft from roof edge, CAT II, EXP B, wind TC DL=2.8 psf, wind BC DL=2.2 psf.

Deflection meets L/360 live and L/240 total load.

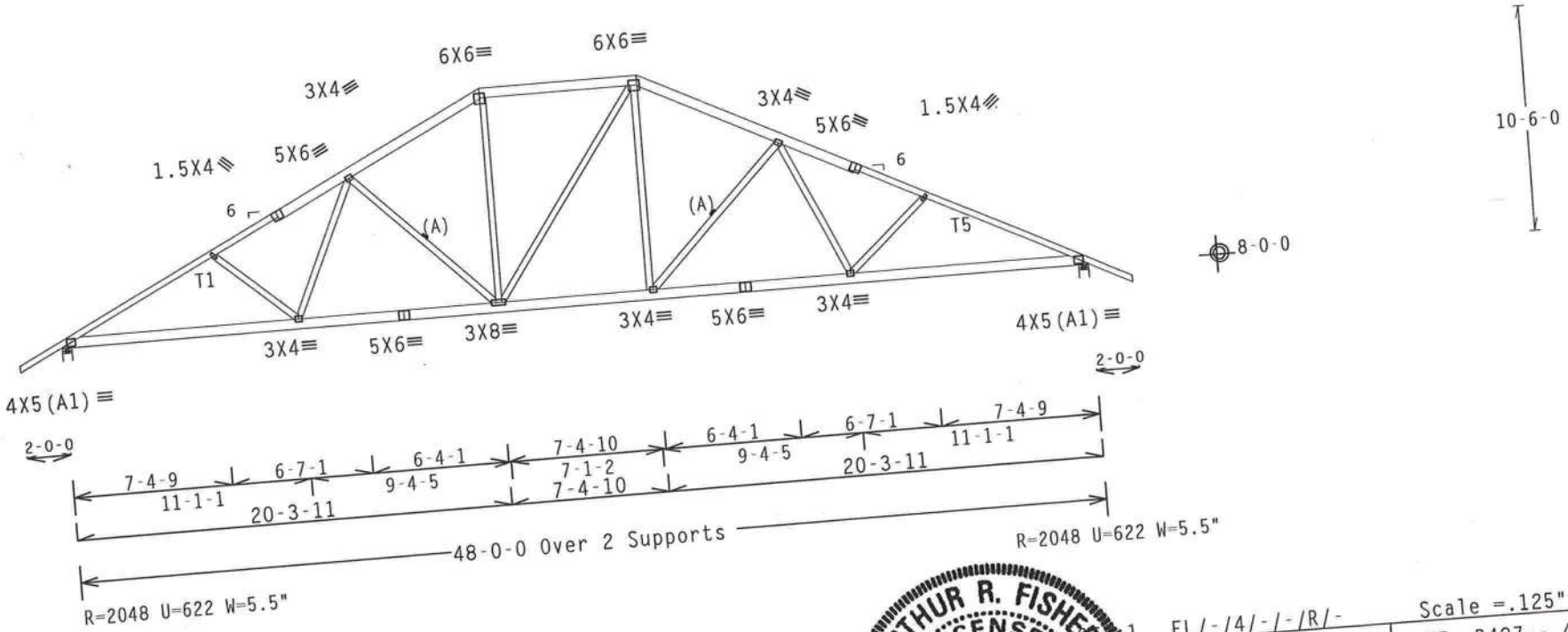

Design Crit: TPI-1995(STD)/FBC

PLT TYP. Wave TPI

ALPINE

WARNING TRUSSES REQUIRE EXTREME CARE IN FABRICATION, HANDLING, SHIPPING, INSTALLING AND BRACING. REFER TO BCSI 1-03 (BUILDING COMPONENT SAFETY INFORMATION), PUBLISHED BY TPI (TRUSS PLATE INSTITUTE, 583 D'ONOFRIO DR., SUITE 200, MADISON, WI 53719) AND WTCA (WOOD TRUSS COUNCIL OF AMERICA, 6300 ENTERPRISE LN MADISON, WI 53719) FOR SAFETY PRACTICES PRIOR TO PERFORMING THESE FUNCTIONS. UNLESS OTHERWISE INDICATED TOP CHORD SHALL HAVE PROPERLY ATTACHED STRUCTURAL PANELS AND BOTTOM CHORD SHALL HAVE A PROPERLY ATTACHED RIGID CEILING.

IMPORTANT FURNISH A COPY OF THIS DESIGN TO THE INSTALLATION CONTRACTOR. ALPINE ENGINEERED PRODUCTS, INC. SHALL NOT BE RESPONSIBLE FOR ANY DEVIATION FROM THIS DESIGN; ANY FAILURE TO BUILD THE TRUSS IN CONFORMANCE WITH TPI: OR FABRICATING, HANDLING, SHIPPING, INSTALLING & BRACING OF TRUSSES. DESIGN CONFORMS WITH APPLICABLE PROVISIONS OF NDS (NATIONAL DESIGN SPEC. BY AF&PA) AND TPI. ALPINE PLATES ARE MADE OF 20/18/16GA (W,H/S/K) ASTM A653 GRADE 40/60 (W, K/H,S) GALV. STEEL. APPLY UNLESS OTHERWISE LOCATED ON THIS DESIGN. POSITION PER DRAWINGS 160A-Z. A SEAL ON THIS SECTION 13 OF TPI1-2002 SEC.3. FOR THE TRUSS COMPONENT

ARTHUR R. FISHER
LICENSE
No. 59687
STATE OF FLORIDA
PROFESSIONAL ENGINEER

7.0 RSC 1 FL/-/4/-/-/R/-

TC LL	20.0 PSF
TC DL	10.0 PSF
BC DL	10.0 PSF
BC LL	0.0 PSF
TOT.LD.	40.0 PSF
DUR.FAC.	1.25
SPACING	24.0"

Scale =.125"/Ft.

REF	R487-- 41629
DATE	07/06/05
DRW	HCUSR487 05187008
HC-ENG	DF/AF
SEQN-	145716
JREF-	1S0I487_Z03

(5-286-ED & KIM CARTER - AGE)

Top chord 2x6 SP #2 :T1, T7 2x4 SP #2 Dense:
Bot chord 2x6 SP #2
Webs 2x4 SP #3

SPECIAL LOADS
------(LUMBER DUR.FAC.=1.25 / PLATE DUR.FAC.=1.25)

TC - From	81 PLF at	-2.00 to	81 PLF at	50.00
BC - From	4 PLF at	-2.00 to	4 PLF at	0.00
BC - From	20 PLF at	0.00 to	20 PLF at	48.00
BC - From	4 PLF at	48.00 to	4 PLF at	50.00

WARNING: Furnish a copy of this DWG to the installation contractor. Special care must be taken during handling, shipping and installation of trusses. See "WARNING" note below.

The building designer is responsible for the design of the roof and ceiling diaphragms, gable end shear walls, and supporting shear walls. Shear walls must provide continuous lateral restraint to the gable end. All connections to be designed by the building designer.

(**) 2 plate(s) require special positioning. Refer to scaled plate plot details for special positioning requirements.

110 mph wind, 12.76 ft mean hgt, ASCE 7-98, CLOSED bldg, Located anywhere in roof, CAT II, EXP B, wind TC DL=2.8 psf, wind BC DL=2.2 psf.

See DWGS A11015EC1103 & GBLLETIN0405 for more requirements.

Deflection meets L/360 live and L/240 total load.

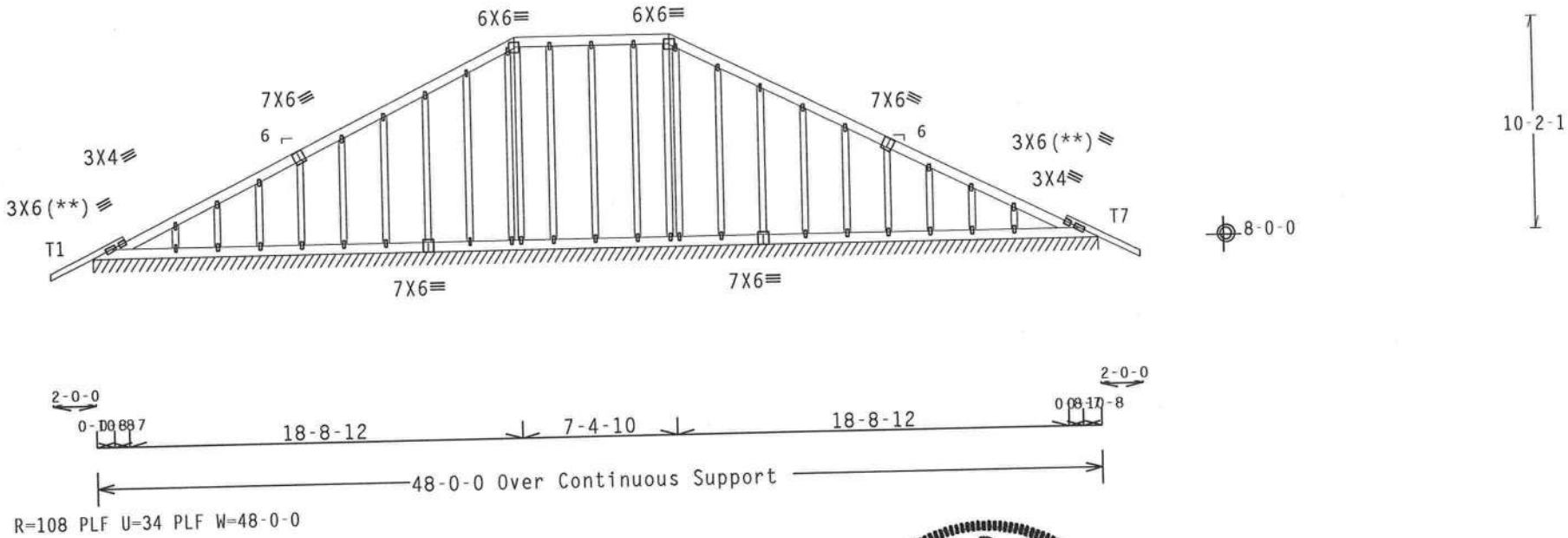

Note: All Plates Are 1.5X4 Except As Shown.

PLT TYP. Wave TPI Design Crit: TPI-1995(STD)/FBC 7.0.0.0605.1 FL/-/4/-/-/R/- Scale =.125"/Ft.

ALPINE
Alpine Engineered Products, Inc.
1950 Marley Drive
Haines City, FL 33844

WARNING TRUSSES REQUIRE EXTREME CARE IN FABRICATION, HANDLING, SHIPPING, INSTALLING AND BRACING. REFER TO BCSI 1-03 (BUILDING COMPONENT SAFETY INFORMATION), PUBLISHED BY TPI (TRUSS PLATE INSTITUTE, 583 D'ONOFRIO DR., SUITE 200, MADISON, WI 53719) AND WTCA (WOOD TRUSS COUNCIL OF AMERICA, 6300 ENTERPRISE LN, MADISON, WI 53719) FOR SAFETY PRACTICES PRIOR TO PERFORMING THESE FUNCTIONS. UNLESS OTHERWISE INDICATED, TOP CHORD SHALL HAVE PROPERLY ATTACHED STRUCTURAL PANELS AND BOTTOM CHORD SHALL HAVE A PROPERLY ATTACHED RIGID CEILING.

IMPORTANT FURNISH A COPY OF THIS DESIGN TO THE INSTALLATION CONTRACTOR. ALPINE ENGINEERED PRODUCTS, INC. SHALL NOT BE RESPONSIBLE FOR ANY DEVIATION FROM THIS DESIGN; ANY FAILURE TO BUILD THE TRUSS IN CONFORMANCE WITH TPI; OR FABRICATING, HANDLING, SHIPPING, INSTALLING & BRACING OF TRUSSES. DESIGN CONFORMS WITH APPLICABLE PROVISIONS OF NDS (NATIONAL DESIGN SPEC. BY AF&PA) AND TPI. ALPINE CONNECTOR PLATES ARE MADE OF 20/18/16GA (W.H/S/K) ASTM A653 GRADE 40/60 (W. K/H.S) GALV. STEEL. APPLY PLATES TO EACH FACE OF TRUSS AND, UNLESS OTHERWISE LOCATED ON THIS DESIGN, POSITION PER DRAWINGS 160A-Z. ANY INSPECTION OF PLATES FOLLOWED BY (1) SHALL BE PER ANNEX A3 OF TPI1-2002 SEC.3. A SEAL ON THIS DRAWING INDICATES ACCEPTANCE OF PROFESSIONAL ENGINEERING RESPONSIBILITY SOLELY FOR THE TRUSS COMPONENT DESIGN SHOWN. THE SUITABILITY AND USE OF THIS COMPONENT FOR ANY BUILDING IS THE RESPONSIBILITY OF THE BUILDING DESIGNER PER ANSI/TPI 1 SEC. 2.

ARTHUR R. FISHER
LICENSE
No.59687
STATE OF FLORIDA
PROFESSIONAL ENGINEER
Jul 06 '05

TC LL	20.0 PSF	REF R487-- 41630
TC DL	10.0 PSF	DATE 07/06/05
BC DL	10.0 PSF	DRW HCUSR487 05187009
BC LL	0.0 PSF	HC-ENG DF/AF
TOT.LD.	40.0 PSF	SEQN- 145807
DUR.FAC.	1.25	
SPACING	24.0"	JREF- 1S0I487_Z03

(5-286-ED & KIM CARTER - AVGE)

Top chord 2x6 SP #2 :T1, T7 2x4 SP #2 Dense:
Bot chord 2x6 SP #2
Webs 2x4 SP #3

SPECIAL LOADS
------(LUMBER DUR.FAC.=1.25 / PLATE DUR.FAC.=1.25)
TC - From 81 PLF at 0.00 to 81 PLF at 50.00
BC - From 20 PLF at 0.00 to 20 PLF at 48.00
BC - From 4 PLF at 48.00 to 4 PLF at 50.00
PLB- 692 LB Conc. Load at (16.77,8.04)
PLB- 286 LB Conc. Load at (18.77,8.04)
PLB- 286 LB Conc. Load at (20.77,8.04)
PLB- 286 LB Conc. Load at (22.77,8.04)
PLB- 286 LB Conc. Load at (24.77,8.04)
PLB- 286 LB Conc. Load at (24.94,8.04)
PLB- 286 LB Conc. Load at (26.94,8.04)
PLB- 286 LB Conc. Load at (28.94,8.04)
PLB- 286 LB Conc. Load at (30.94,8.04)
PLB- 286 LB Conc. Load at (32.94,8.04)
PLB- 286 LB Conc. Load at (34.94,8.04)
PLB- 286 LB Conc. Load at (36.94,8.04)
PLB- 286 LB Conc. Load at (38.94,8.04)
PLB- 692 LB Conc. Load at (40.94,8.04)

(**) 2 plate(s) require special positioning. Refer to scaled plate plot details for special positioning requirements.

110 mph wind, 15.00 ft mean hgt, ASCE 7-98, CLOSED bldg, Located anywhere in roof, CAT II, EXP B, wind TC DL=2.8 psf, wind BC DL=2.2 psf. +

See DWGS A11015EC1103 & GBLLETIN0405 for more requirements.

Deflection meets L/360 live and L/240 total load.

WARNING: Furnish a copy of this DWG to the installation contractor. Special care must be taken during handling, shipping and installation of trusses. See "WARNING" note below.

The building designer is responsible for the design of the roof and ceiling diaphragms, gable end shear walls, and supporting shear walls. Shear walls must provide continuous lateral restraint to the gable end. All connections to be designed by the building designer.

+ LATERALLY BRACE FOR WIND LOADS PERPENDICULAR TO TRUSS. BRACING SYSTEM TO BE DESIGNED AND FURNISHED BY OTHERS.

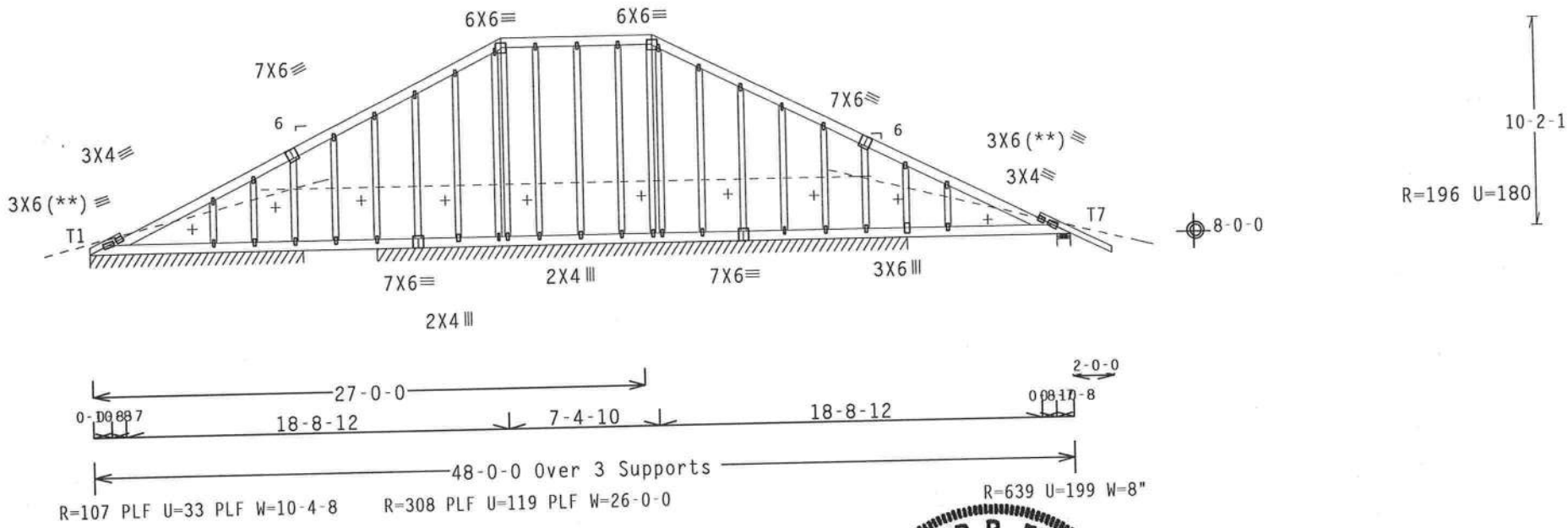

Note: All Plates Are 1.5X4 Except As Shown.

PLT TYP. Wave TPI

Design Crit: TPI-1995(STD)/FBC

7.04.0805.16 1 FL/-/4/-/-/R/-

Scale =.125"/Ft.

ALPINE
Alpine Engineered Products, Inc.
1950 Marley Drive
Haines City, FL 33844

WARNING TRUSSES REQUIRE EXTREME CARE IN FABRICATION, HANDLING, SHIPPING, INSTALLING AND BRACING. REFER TO BCSI 1-03 (BUILDING COMPONENT SAFETY INFORMATION), PUBLISHED BY TPI (TRUSS PLATE INSTITUTE, 583 D'ONOFRIO DR., SUITE 200, MADISON, WI 53719) AND WTCA (WOOD TRUSS COUNCIL OF AMERICA, 6300 ENTERPRISE LN MADISON, WI 53719) FOR SAFETY PRACTICES PRIOR TO PERFORMING THESE FUNCTIONS. UNLESS OTHERWISE INDICATED TOP CHORD SHALL HAVE PROPERLY ATTACHED STRUCTURAL PANELS AND BOTTOM CHORD SHALL HAVE A PROPERLY ATTACHED RIGID CEILING.

IMPORTANT FURNISH A COPY OF THIS DESIGN TO THE INSTALLATION CONTRACTOR. ALPINE ENGINEERED PRODUCTS, INC. SHALL NOT BE RESPONSIBLE FOR ANY DEVIATION FROM THIS DESIGN; ANY FAILURE TO BUILD THE TRUSS IN CONFORMANCE WITH TPI; OR FABRICATING, HANDLING, SHIPPING, INSTALLING & BRACING OF TRUSSES. DESIGN CONFORMS WITH APPLICABLE PROVISIONS OF NDS (NATIONAL DESIGN SPEC, BY AF&PA) AND TPI. ALPINE CONNECTOR PLATES ARE MADE OF 20/18/16GA (W,H/S/K) ASTM A653 GRADE 40/60 (W, K/H,S) GALV. STEEL. APPLY PLATES TO EACH FACE OF TRUSS AND, UNLESS OTHERWISE LOCATED ON THIS DESIGN, POSITION PER DRAWINGS 160A-Z. ANY INSPECTION OF PLATES FOLLOWED BY (I) SHALL BE PER ANNEX A3 OF TPI1-2002 SEC.3. A SEAL ON THIS DRAWING INDICATES ACCEPTANCE OF PROFESSIONAL ENGINEERING RESPONSIBILITY SOLELY FOR THE TRUSS COMPONENT DESIGN SHOWN. THE SUITABILITY AND USE OF THIS COMPONENT FOR ANY BUILDING IS THE RESPONSIBILITY OF THE BUILDING DESIGNER PER ANSI/TPI 1 SEC. 2.

ARTHUR R. FISHER LICENSE No. 59687 STATE OF FLORIDA PROFESSIONAL ENGINEER

Jul 06 '05

TC LL	20.0 PSF	REF R487-- 41631
TC DL	10.0 PSF	DATE 07/06/05
BC DL	10.0 PSF	DRW HCUSR487 05187022
BC LL	0.0 PSF	HC-ENG DF/AF
TOT.LD.	40.0 PSF	SEQN- 145839
DUR.FAC.	1.25	
SPACING	24.0"	JREF- 1S0I487_Z03

(5-286-ED & KIM CARTER - AR)

Top chord 2x6 SP #1 Dense :T1, T5 2x4 SP #2 Dense:
Bot chord 2x6 SP #1 Dense :B2 2x8 SP SS:
:B3 2x4 SP #2 Dense:
Webs 2x4 SP #3

Collar-tie braced with continuous lateral bracing at 24" OC. or rigid ceiling.

Deflection meets L/360 live and L/240 total load.

110 mph wind, 12.92 ft mean hgt, ASCE 7-98, CLOSED bldg, Located anywhere in roof, CAT II, EXP B, wind TC DL=2.8 psf, wind BC DL=2.2 psf.

Roof overhang supports 2.00 psf soffit load.

BC attic room floor loading: LL = 40.00 psf; DL = 10.00 psf; from 18-0-0 to 30-0-0.

WARNING: Furnish a copy of this DWG to the installation contractor. Special care must be taken during handling, shipping and installation of trusses. See "WARNING" note below.

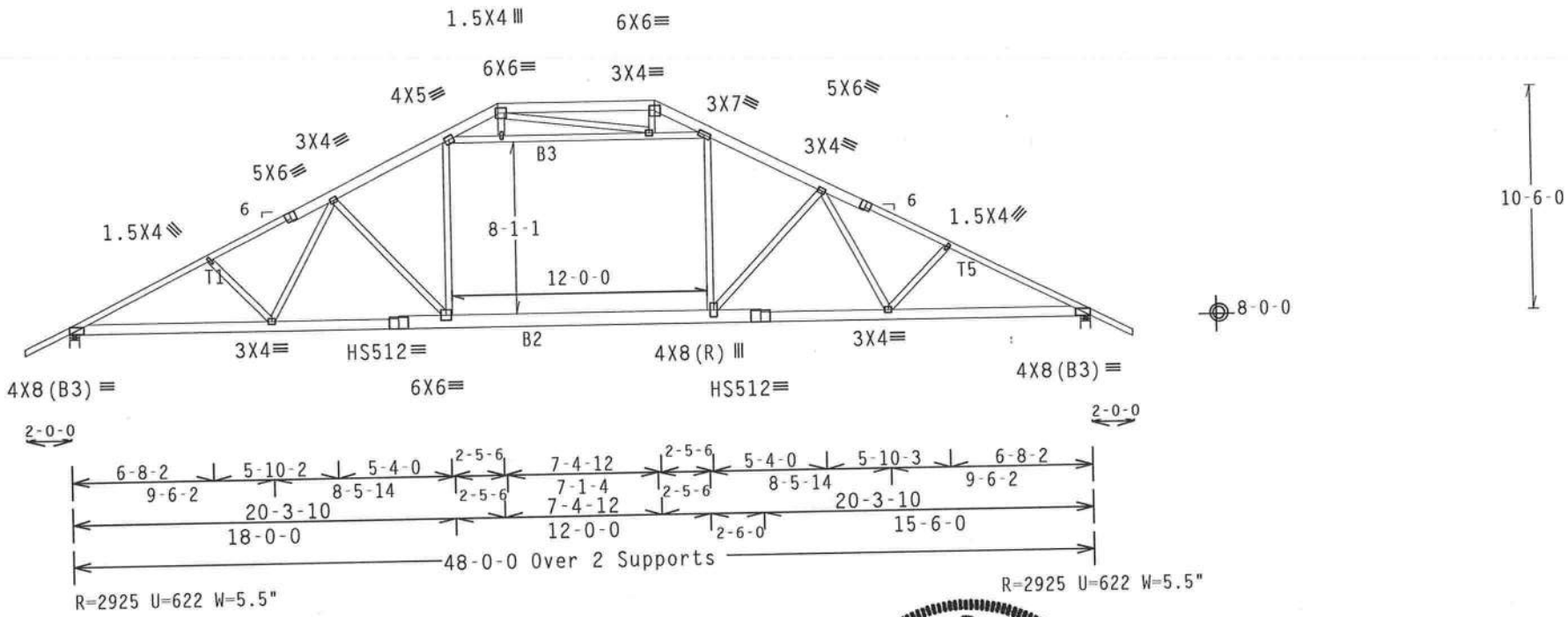

PLT TYP. 20 Gauge HS,Wave TPI Design Crit: TPI-1995(STD)/FBC 7.0 [illegible] 16 [illegible] 4 FL/-/4/-/-/R/- Scale =.125"/Ft.

ALPINE
Alpine Engineered Products, Inc.
1950 Marley Drive
Haines City, FL 33844
FL Certificate of Authorization # 567

WARNING TRUSSES REQUIRE EXTREME CARE IN FABRICATION, HANDLING, SHIPPING, INSTALLING AND BRACING. REFER TO BCSI 1-03 (BUILDING COMPONENT SAFETY INFORMATION), PUBLISHED BY TPI (TRUSS PLATE INSTITUTE, 583 D'ONOFRIO DR., SUITE 200, MADISON, WI 53719) AND WTCA (WOOD TRUSS COUNCIL OF AMERICA, 6300 ENTERPRISE LN MADISON, WI 53719) FOR SAFETY PRACTICES PRIOR TO PERFORMING THESE FUNCTIONS. UNLESS OTHERWISE INDICATED TOP CHORD SHALL HAVE PROPERLY ATTACHED STRUCTURAL PANELS AND BOTTOM CHORD SHALL HAVE A PROPERLY ATTACHED RIGID CEILING.

IMPORTANT FURNISH A COPY OF THIS DESIGN TO THE INSTALLATION CONTRACTOR. ALPINE ENGINEERED PRODUCTS, INC. SHALL NOT BE RESPONSIBLE FOR ANY DEVIATION FROM THIS DESIGN; ANY FAILURE TO BUILD THE TRUSS IN CONFORMANCE WITH TPI; OR FABRICATING, HANDLING, SHIPPING, INSTALLING & BRACING OF TRUSSES. DESIGN CONFORMS WITH APPLICABLE PROVISIONS OF NDS (NATIONAL DESIGN SPEC, BY AF&PA) AND TPI. ALPINE CONNECTOR PLATES ARE MADE OF 20/18/16GA (W,H/S/K) ASTM A653 GRADE 40/60 (W, K/H,S) GALV. STEEL. APPLY PLATES TO EACH FACE OF TRUSS AND, UNLESS OTHERWISE LOCATED ON THIS DESIGN, POSITION PER DRAWINGS 160A-2. ANY INSPECTION OF PLATES FOLLOWED BY (I) SHALL BE PER ANNEX A3 OF TPI1-2002 SEC.3. A SEAL ON THIS DRAWING INDICATES ACCEPTANCE OF PROFESSIONAL ENGINEERING RESPONSIBILITY SOLELY FOR THE TRUSS COMPONENT DESIGN SHOWN. THE SUITABILITY AND USE OF THIS COMPONENT FOR ANY BUILDING IS THE RESPONSIBILITY OF THE BUILDING DESIGNER PER ANSI/TPI 1 SEC. 2.

ARTHUR R. FISHER
LICENSE
No. 59687
STATE OF FLORIDA
PROFESSIONAL ENGINEER
Jul 06 '05

TC LL	20.0 PSF	REF R487-- 41632
TC DL	10.0 PSF	DATE 07/06/05
BC DL	10.0 PSF	DRW HCUSR487 05187010
BC LL	0.0 PSF	HC-ENG DF/AF
TOT.LD.	40.0 PSF	SEQN- 145768
DUR.FAC.	1.25	
SPACING	24.0"	JREF- 1S0I487_Z03

(5-286-ED & KIM CARTER - AT)

Top chord 2x6 SP #1 Dense :T1, T5 2x4 SP #2 Dense:
Bot chord 2x6 SP #1 Dense
Webs 2x4 SP #3

(A) Continuous lateral bracing equally spaced on member.

WARNING: Furnish a copy of this DWG to the installation contractor. Special care must be taken during handling, shipping and installation of trusses. See "WARNING" note below.

110 mph wind, 12.92 ft mean hgt, ASCE 7-98, CLOSED bldg, not located within 6.50 ft from roof edge, CAT II, EXP B, wind TC DL=2.8 psf, wind BC DL=2.2 psf.

Deflection meets L/360 live and L/240 total load.

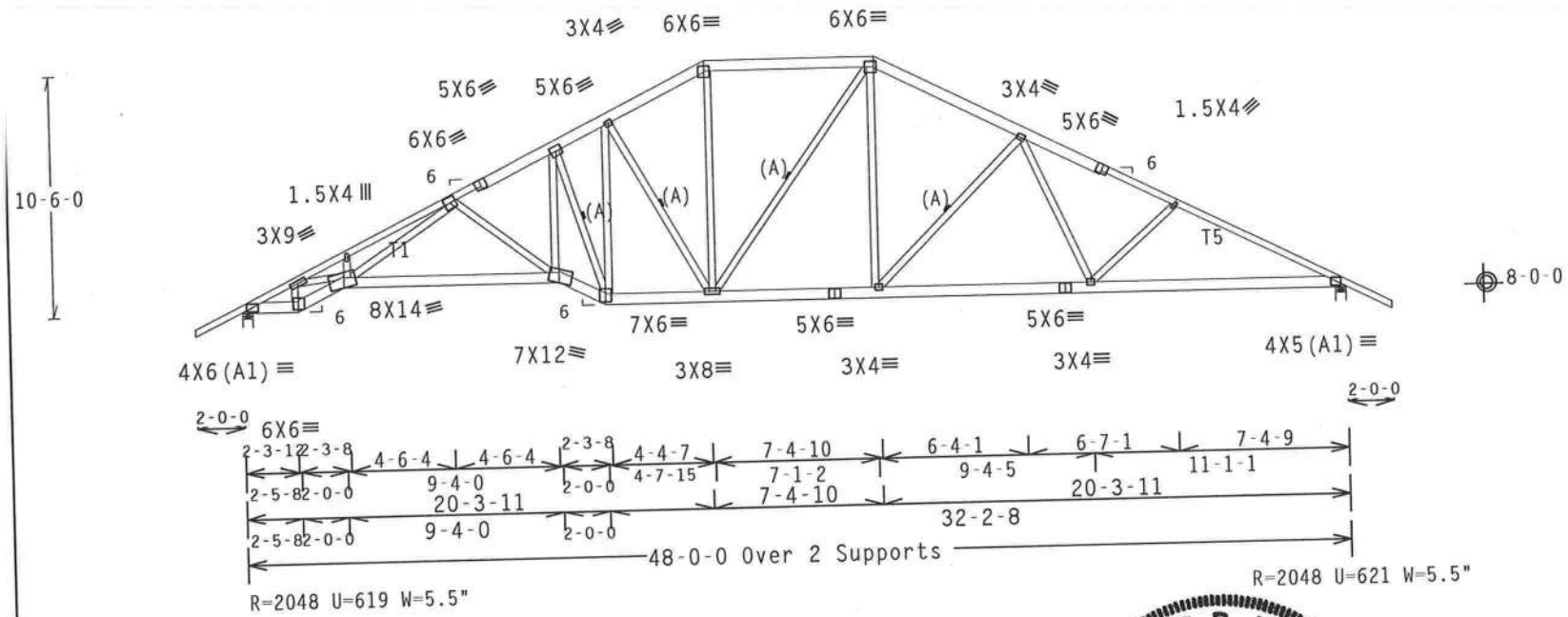

PLT TYP. Wave TPI

Design Crit: TPI-1995(STD)/FBC 7.0.0805.16 CM06

FL/-/4/-/-/R/-

Scale =.125"/Ft.

ALPINE

Alpine Engineered Products, Inc.
1950 Marley Drive
Haines City, FL 33844

WARNING TRUSSES REQUIRE EXTREME CARE IN FABRICATION, HANDLING, SHIPPING, INSTALLING AND BRACING. REFER TO BCSI 1-03 (BUILDING COMPONENT SAFETY INFORMATION), PUBLISHED BY TPI (TRUSS PLATE INSTITUTE, 583 D'ONOFRIO DR., SUITE 200, MADISON, WI 53719) AND WTCA (WOOD TRUSS COUNCIL OF AMERICA, 6300 ENTERPRISE LN, MADISON, WI 53719) FOR SAFETY PRACTICES PRIOR TO PERFORMING THESE FUNCTIONS. UNLESS OTHERWISE INDICATED, TOP CHORD SHALL HAVE PROPERLY ATTACHED STRUCTURAL PANELS AND BOTTOM CHORD SHALL HAVE A PROPERLY ATTACHED RIGID CEILING.

IMPORTANT FURNISH A COPY OF THIS DESIGN TO THE INSTALLATION CONTRACTOR. ALPINE ENGINEERED PRODUCTS, INC. SHALL NOT BE RESPONSIBLE FOR ANY DEVIATION FROM THIS DESIGN; ANY FAILURE TO BUILD THE TRUSS IN CONFORMANCE WITH TPI; OR FABRICATING, HANDLING, SHIPPING, INSTALLING & BRACING OF TRUSSES. DESIGN CONFORMS WITH APPLICABLE PROVISIONS OF NDS (NATIONAL DESIGN SPEC. BY AF&PA) AND TPI. ALPINE CONNECTOR PLATES ARE MADE OF 20/18/16GA (W,H/S/K) ASTM A653 GRADE 40/60 (W, K/H,S) GALV. STEEL. APPLY PLATES TO EACH FACE OF TRUSS AND, UNLESS OTHERWISE LOCATED ON THIS DESIGN, POSITION PER DRAWINGS 160A-Z: ANY INSPECTION OF PLATES FOLLOWED BY (i) SHALL BE PER ANNEX A3 OF TPI1-2002 SEC.3. A SEAL ON THIS DRAWING INDICATES ACCEPTANCE OF PROFESSIONAL ENGINEERING RESPONSIBILITY SOLELY FOR THE TRUSS COMPONENT DESIGN SHOWN. THE SUITABILITY AND USE OF THIS COMPONENT FOR ANY BUILDING IS THE RESPONSIBILITY OF THE BUILDING DESIGNER PER ANSI/TPI 1 SEC. 2.

ARTHUR R. FISHER
LICENSE
No. 59687
STATE OF FLORIDA
PROFESSIONAL ENGINEER

Jul 06 '05

TC LL	20.0 PSF	REF R487-- 41633
TC DL	10.0 PSF	DATE 07/06/05
BC DL	10.0 PSF	DRW HCUSR487 05187011
BC LL	0.0 PSF	HC-ENG DF/AF
TOT.LD.	40.0 PSF	SEQN- 145786
DUR.FAC.	1.25	
SPACING	24.0"	JREF- 1SOI487_Z03

(5-286-ED & KIM CARTER - AV1)

Top chord 2x6 SP #1 Dense :T1, T5 2x4 SP #2 Dense:
Bot chord 2x6 SP #1 Dense
Webs 2x4 SP #3

Deflection meets L/360 live and L/240 total load.

110 mph wind, 12.92 ft mean hgt, ASCE 7-98, CLOSED bldg, not located within 6.50 ft from roof edge, CAT II, EXP B, wind TC DL=2.8 psf, wind BC DL=2.2 psf.

WARNING: Furnish a copy of this DWG to the installation contractor. Special care must be taken during handling, shipping and installation of trusses. See "WARNING" note below.

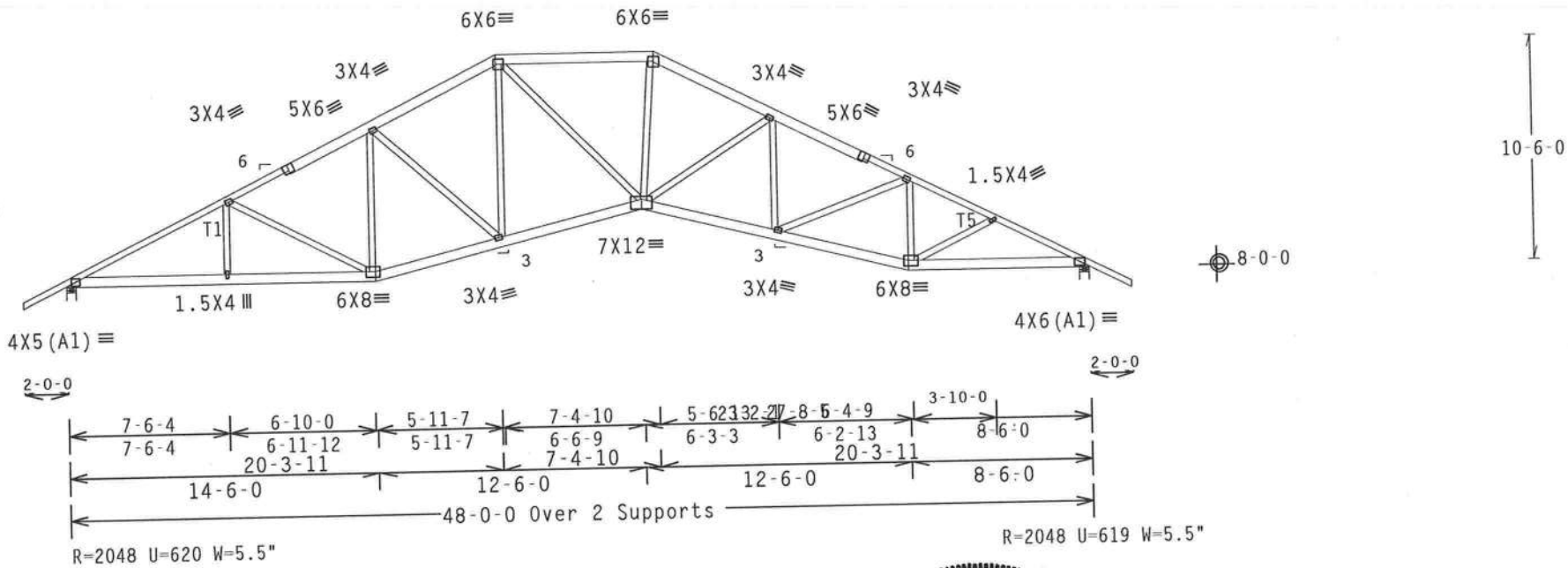

PLT TYP. Wave TPI

Design Crit: TPI-1995(STD)/FBC

7.04 080516 [illegible] 8

FL/-/4/-/-/R/-

Scale =.125"/Ft.

ALPINE

Alpine Engineered Products, Inc.
1950 Marley Drive
Haines City, FL 33844

WARNING TRUSSES REQUIRE EXTREME CARE IN FABRICATION, HANDLING, SHIPPING, INSTALLING AND BRACING. REFER TO BCSI 1-03 (BUILDING COMPONENT SAFETY INFORMATION), PUBLISHED BY TPI (TRUSS PLATE INSTITUTE, 583 D'ONOFRIO DR., SUITE 200, MADISON, WI 53719) AND WTCA (WOOD TRUSS COUNCIL OF AMERICA, 6300 ENTERPRISE LN, MADISON, WI 53719) FOR SAFETY PRACTICES PRIOR TO PERFORMING THESE FUNCTIONS. UNLESS OTHERWISE INDICATED, TOP CHORD SHALL HAVE PROPERLY ATTACHED STRUCTURAL PANELS AND BOTTOM CHORD SHALL HAVE A PROPERLY ATTACHED RIGID CEILING.

IMPORTANT FURNISH A COPY OF THIS DESIGN TO THE INSTALLATION CONTRACTOR. ALPINE ENGINEERED PRODUCTS, INC. SHALL NOT BE RESPONSIBLE FOR ANY DEVIATION FROM THIS DESIGN; ANY FAILURE TO BUILD THE TRUSS IN CONFORMANCE WITH TPI; OR FABRICATING, HANDLING, SHIPPING, INSTALLING & BRACING OF TRUSSES. DESIGN CONFORMS WITH APPLICABLE PROVISIONS OF NDS (NATIONAL DESIGN SPEC. BY AF&PA) AND TPI. ALPINE CONNECTOR PLATES ARE MADE OF 20/18/16GA (W,H/S/K) ASTM A653 GRADE 40/60 (W, K/H,S) GALV. STEEL. APPLY PLATES TO EACH FACE OF TRUSS AND, UNLESS OTHERWISE LOCATED ON THIS DESIGN, POSITION PER DRAWINGS 160A-Z. ANY INSPECTION OF PLATES FOLLOWED BY (1) SHALL BE PER ANNEX A3 OF TPI1-2002 SEC.3. A SEAL ON THIS DRAWING INDICATES ACCEPTANCE OF PROFESSIONAL ENGINEERING RESPONSIBILITY SOLELY FOR THE TRUSS COMPONENT DESIGN SHOWN. THE SUITABILITY AND USE OF THIS COMPONENT FOR ANY BUILDING IS THE RESPONSIBILITY OF THE BUILDING DESIGNER PER ANSI/TPI 1 SEC. 2.

ARTHUR R. FISHER
LICENSE
No. 59687
STATE OF FLORIDA
PROFESSIONAL ENGINEER

JUL 06 '05

TC LL	20.0 PSF	REF R487-- 41634
TC DL	10.0 PSF	DATE 07/06/05
BC DL	10.0 PSF	DRW HCUSR487 05187012
BC LL	0.0 PSF	HC-ENG DF/AF
TOT.LD.	40.0 PSF	SEQN- 145673
DUR.FAC.	1.25	
SPACING	24.0"	JREF- 1SOI487_Z03

(5-286-ED & KIM CARTER - AV)

Top chord 2x6 SP #1 Dense :T1, T5 2x4 SP #2 Dense:
Bot chord 2x6 SP #1 Dense
Webs 2x4 SP #3

WARNING: Furnish a copy of this DWG to the installation contractor. Special care must be taken during handling, shipping and installation of trusses. See "WARNING" note below.

110 mph wind, 12.92 ft mean hgt, ASCE 7-98, CLOSED bldg, not located within 6.50 ft from roof edge, CAT II, EXP B, wind TC DL=2.8 psf, wind BC DL=2.2 psf.

(A) Continuous lateral bracing equally spaced on member.

Deflection meets L/360 live and L/240 total load.

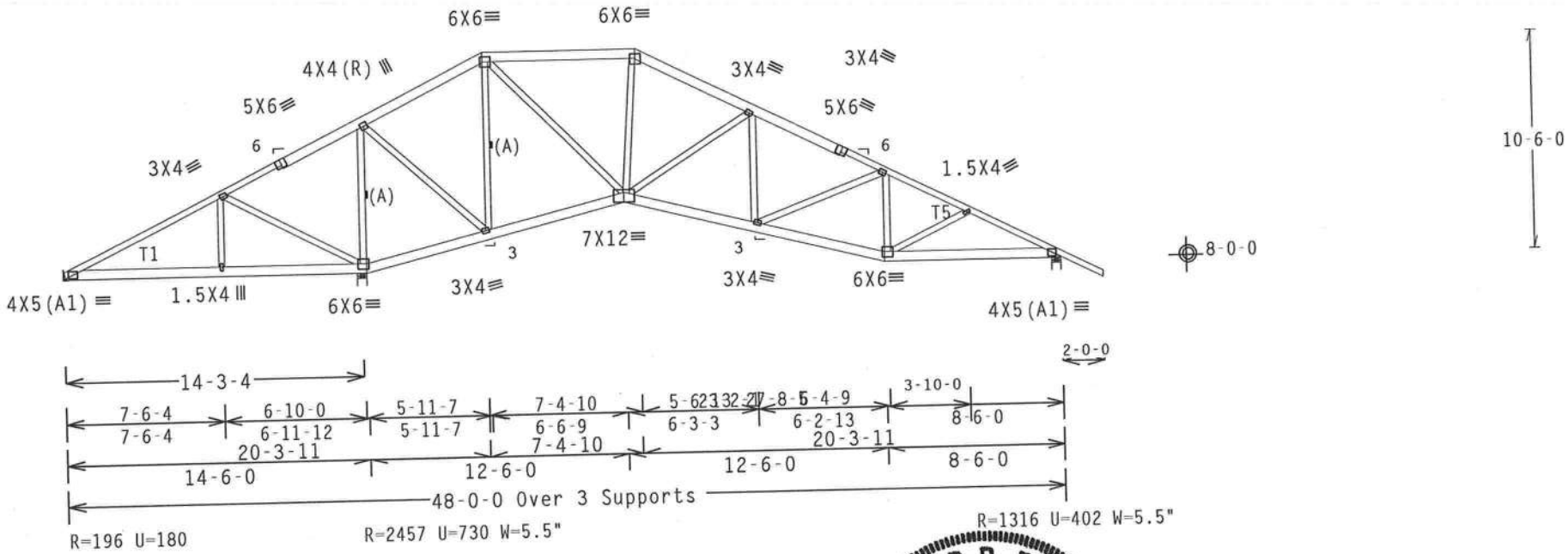

PLT TYP. Wave TPI

Design Crit: TPI-1995(STD)/FBC

7.0 .8805.16

QTY 10 FL/-/4/-/-/R/-

Scale =.125"/Ft.

ALPINE

Alpine Engineered Products, Inc.
1950 Marley Drive
Haines City, FL 33844

WARNING TRUSSES REQUIRE EXTREME CARE IN FABRICATION, HANDLING, SHIPPING, INSTALLING AND BRACING. REFER TO BCSI 1-03 (BUILDING COMPONENT SAFETY INFORMATION), PUBLISHED BY TPI (TRUSS PLATE INSTITUTE, 583 D'ONOFRIO DR., SUITE 200, MADISON, WI 53719) AND WTCA (WOOD TRUSS COUNCIL OF AMERICA, 6300 ENTERPRISE LN. MADISON, WI 53719) FOR SAFETY PRACTICES PRIOR TO PERFORMING THESE FUNCTIONS. UNLESS OTHERWISE INDICATED, TOP CHORD SHALL HAVE PROPERLY ATTACHED STRUCTURAL PANELS AND BOTTOM CHORD SHALL HAVE A PROPERLY ATTACHED RIGID CEILING.

IMPORTANT FURNISH A COPY OF THIS DESIGN TO THE INSTALLATION CONTRACTOR. ALPINE ENGINEERED PRODUCTS, INC. SHALL NOT BE RESPONSIBLE FOR ANY DEVIATION FROM THIS DESIGN; ANY FAILURE TO BUILD THE TRUSS IN CONFORMANCE WITH TPI; OR FABRICATING, HANDLING, SHIPPING, INSTALLING & BRACING OF TRUSSES. DESIGN CONFORMS WITH APPLICABLE PROVISIONS OF NDS (NATIONAL DESIGN SPEC, BY AF&PA) AND TPI. ALPINE CONNECTOR PLATES ARE MADE OF 20/18/16GA (W,H/S/K) ASTM A653 GRADE 40/60 (W, K/H,S) GALV. STEEL. APPLY PLATES TO EACH FACE OF TRUSS AND, UNLESS OTHERWISE LOCATED ON THIS DESIGN, POSITION PER DRAWINGS 160A-Z. ANY INSPECTION OF PLATES FOLLOWED BY (1) SHALL BE PER ANNEX A3 OF TPI1-2002 SEC.3. A SEAL ON THIS DRAWING INDICATES ACCEPTANCE OF PROFESSIONAL ENGINEERING RESPONSIBILITY SOLELY FOR THE TRUSS COMPONENT DESIGN SHOWN. THE SUITABILITY AND USE OF THIS COMPONENT FOR ANY BUILDING IS THE RESPONSIBILITY OF THE BUILDING DESIGNER PER ANSI/TPI 1 SEC. 2.

ARTHUR R. FISHER
LICENSE
No. 59687
STATE OF FLORIDA
PROFESSIONAL ENGINEER

Jul 06 '05

TC LL	20.0 PSF	REF R487-- 41635
TC DL	10.0 PSF	DATE 07/06/05
BC DL	10.0 PSF	DRW HCUSR487 05187013
BC LL	0.0 PSF	HC-ENG DF/AF
TOT.LD.	40.0 PSF	SEQN- 145685
DUR.FAC.	1.25	
SPACING	24.0"	JREF- 1SOI487_Z03

(5-286-ED & KIM CARTER - H7B)

Top chord 2x4 SP #2 Dense
Bot chord 2x6 SP #1 Dense
Webs 2x4 SP #3

#1 hip supports 7-0-0 jacks with no webs.

110 mph wind, 15.00 ft mean hgt, ASCE 7-98, CLOSED bldg, Located anywhere in roof, CAT II, EXP B, wind TC DL=2.8 psf, wind BC DL=2.2 psf.

Deflection meets L/360 live and L/240 total load.

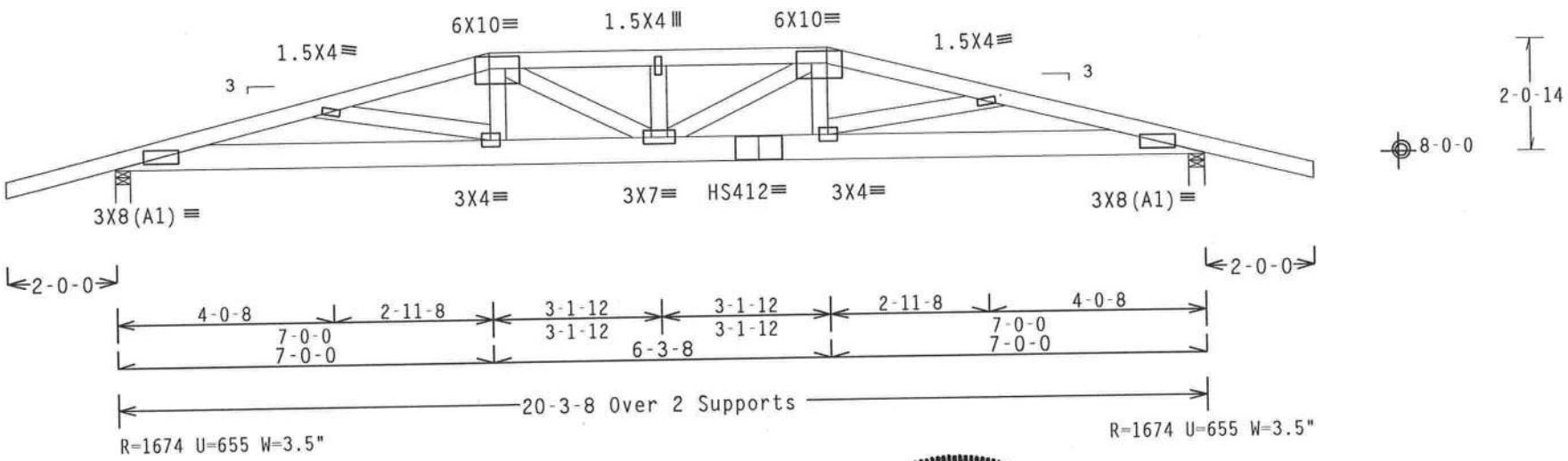

PLT TYP. 20 Gauge HS,Wave TPI Design Crit: TPI-1995(STD)/FBC 7.0 [illegible] 1 FL/-/4/-/-/R/- Scale =.3125"/Ft.

ALPINE
Alpine Engineered Products, Inc.
1950 Marley Drive
Haines City, FL 33844

WARNING TRUSSES REQUIRE EXTREME CARE IN FABRICATION, HANDLING, SHIPPING, INSTALLING AND BRACING. REFER TO BCSI 1-03 (BUILDING COMPONENT SAFETY INFORMATION), PUBLISHED BY TPI (TRUSS PLATE INSTITUTE, 583 D'ONOFRIO DR., SUITE 200, MADISON, WI 53719) AND WTCA (WOOD TRUSS COUNCIL OF AMERICA, 6300 ENTERPRISE LN MADISON, WI 53719) FOR SAFETY PRACTICES PRIOR TO PERFORMING THESE FUNCTIONS. UNLESS OTHERWISE INDICATED TOP CHORD SHALL HAVE PROPERLY ATTACHED STRUCTURAL PANELS AND BOTTOM CHORD SHALL HAVE A PROPERLY ATTACHED RIGID CEILING.

IMPORTANT FURNISH A COPY OF THIS DESIGN TO THE INSTALLATION CONTRACTOR. ALPINE ENGINEERED PRODUCTS, INC. SHALL NOT BE RESPONSIBLE FOR ANY DEVIATION FROM THIS DESIGN; ANY FAILURE TO BUILD THE TRUSS IN CONFORMANCE WITH TPI; OR FABRICATING, HANDLING, SHIPPING, INSTALLING & BRACING OF TRUSSES. DESIGN CONFORMS WITH APPLICABLE PROVISIONS OF NDS (NATIONAL DESIGN SPEC. BY AF&PA) AND TPI. ALPINE CONNECTOR PLATES ARE MADE OF 20/18/16GA (W,H/S/K) ASTM A653 GRADE 40/60 (W, K/H,S) GALV. STEEL. APPLY PLATES TO EACH FACE OF TRUSS AND, UNLESS OTHERWISE LOCATED ON THIS DESIGN, POSITION PER DRAWINGS 160A-Z. ANY INSPECTION OF PLATES FOLLOWED BY (1) SHALL BE PER ANNEX A3 OF TPI1-2002 SEC.3. A SEAL ON THIS DRAWING INDICATES ACCEPTANCE OF PROFESSIONAL ENGINEERING RESPONSIBILITY SOLELY FOR THE TRUSS COMPONENT DESIGN SHOWN. THE SUITABILITY AND USE OF THIS COMPONENT FOR ANY BUILDING IS THE RESPONSIBILITY OF THE BUILDING DESIGNER PER ANSI/TPI 1 SEC. 2.

ARTHUR R. FISHER
LICENSE
No. 59687
STATE OF FLORIDA
PROFESSIONAL ENGINEER
Jul 06 '05

TC LL	20.0 PSF	REF R487-- 41636
TC DL	10.0 PSF	DATE 07/06/05
BC DL	10.0 PSF	DRW HCUSR487 05187014
BC LL	0.0 PSF	HC-ENG DF/AF
TOT.LD.	40.0 PSF	SEQN- 145568
DUR.FAC.	1.25	
SPACING	24.0"	JREF- 1SOI487_Z03

(5-286-ED & KIM CARTER - H9B)

Top chord 2x4 SP #2 Dense
Bot chord 2x4 SP #2 Dense
Webs 2x4 SP #3

Deflection meets L/360 live and L/240 total load.

110 mph wind, 9.20 ft mean hgt, ASCE 7-98, CLOSED bldg, not located within 4.50 ft from roof edge, CAT II, EXP B, wind TC DL=2.8 psf, wind BC DL=2.2 psf.

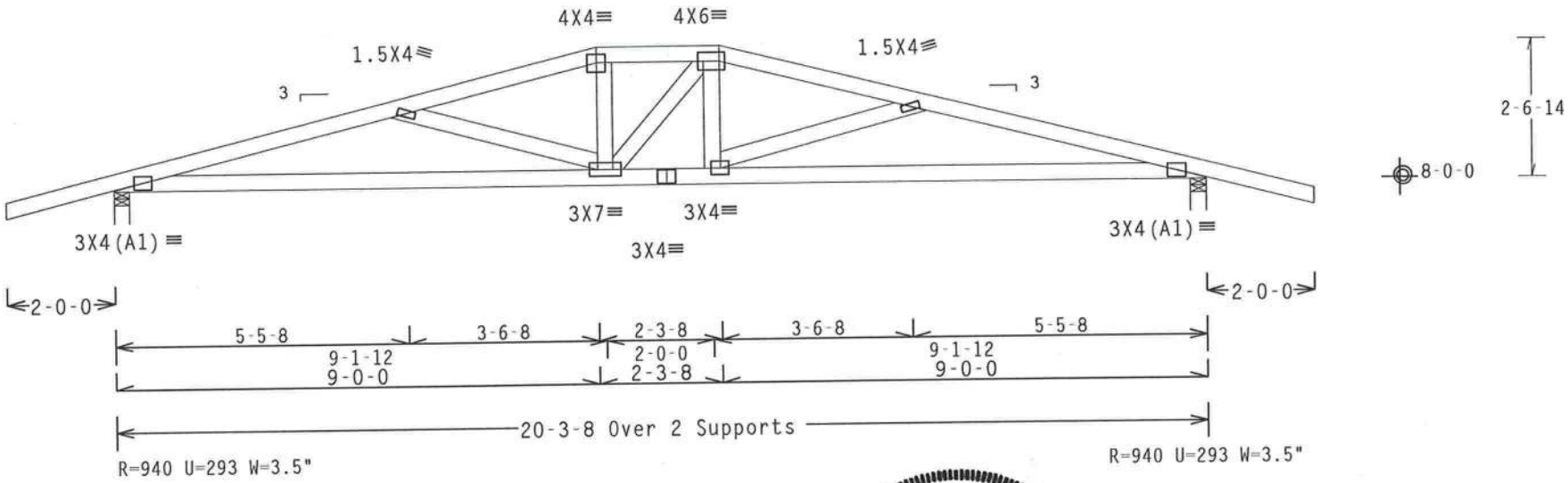

PLT TYP. Wave TPI

Design Crit: TPI-1995(STD)/FBC

7.0[illegible].4885.16 QTY 1

FL/-/4/-/-/R/-

Scale =.3125"/Ft.

ALPINE

Alpine Engineered Products, Inc.
1950 Marley Drive
Haines City, FL 33844
FL Certificate of Authorization # 567

WARNING TRUSSES REQUIRE EXTREME CARE IN FABRICATION, HANDLING, SHIPPING, INSTALLING AND BRACING. REFER TO BCSI 1-03 (BUILDING COMPONENT SAFETY INFORMATION), PUBLISHED BY TPI (TRUSS PLATE INSTITUTE, 583 D'ONOFRIO DR., SUITE 200, MADISON, WI 53719) AND WTCA (WOOD TRUSS COUNCIL OF AMERICA, 6300 ENTERPRISE LN MADISON, WI 53719) FOR SAFETY PRACTICES PRIOR TO PERFORMING THESE FUNCTIONS. UNLESS OTHERWISE INDICATED TOP CHORD SHALL HAVE PROPERLY ATTACHED STRUCTURAL PANELS AND BOTTOM CHORD SHALL HAVE A PROPERLY ATTACHED RIGID CEILING.

IMPORTANT FURNISH A COPY OF THIS DESIGN TO THE INSTALLATION CONTRACTOR. ALPINE ENGINEERED PRODUCTS, INC. SHALL NOT BE RESPONSIBLE FOR ANY DEVIATION FROM THIS DESIGN; ANY FAILURE TO BUILD THE TRUSS IN CONFORMANCE WITH TPI; OR FABRICATING, HANDLING, SHIPPING, INSTALLING & BRACING OF TRUSSES. DESIGN CONFORMS WITH APPLICABLE PROVISIONS OF NDS (NATIONAL DESIGN SPEC. BY AF&PA) AND TPI. ALPINE CONNECTOR PLATES ARE MADE OF 20/18/16GA (W,H/S/K) ASTM A653 GRADE 40/60 (W, K/H,S) GALV. STEEL. APPLY PLATES TO EACH FACE OF TRUSS AND, UNLESS OTHERWISE LOCATED ON THIS DESIGN, POSITION PER DRAWINGS 160A-Z. ANY INSPECTION OF PLATES FOLLOWED BY (1) SHALL BE PER ANNEX A3 OF TPI1-2002 SEC.3. A SEAL ON THIS DRAWING INDICATES ACCEPTANCE OF PROFESSIONAL ENGINEERING RESPONSIBILITY SOLELY FOR THE TRUSS COMPONENT DESIGN SHOWN. THE SUITABILITY AND USE OF THIS COMPONENT FOR ANY BUILDING IS THE RESPONSIBILITY OF THE BUILDING DESIGNER PER ANSI/TPI 1 SEC. 2.

ARTHUR R. FISHER
LICENSE
No. 59687
STATE OF FLORIDA
PROFESSIONAL ENGINEER

Jul 06 '05

TC LL	20.0 PSF	REF	R487-- 41637
TC DL	10.0 PSF	DATE	07/06/05
BC DL	10.0 PSF	DRW	HCUSR487 05187006
BC LL	0.0 PSF	HC-ENG	DF/AF *
TOT.LD.	40.0 PSF	SEQN-	145635
DUR.FAC.	1.25		
SPACING	24.0"	JREF-	1SOI487_Z03

(5-286-ED & KIM CARTER - BG)

Top chord 2x4 SP #2 Dense
Bot chord 2x6 SP #1 Dense
Webs 2x4 SP #3

SPECIAL LOADS
------(LUMBER DUR.FAC.=1.25 / PLATE DUR.FAC.=1.25)
TC - From 60 PLF at -2.00 to 60 PLF at 22.29
BC - From 4 PLF at -2.00 to 4 PLF at 0.00
BC - From 20 PLF at 0.00 to 20 PLF at 20.29
BC - From 4 PLF at 20.29 to 4 PLF at 22.29
BC - 196 LB Conc. Load at 0.44, 2.44, 4.44, 6.44, 8.44
10.44, 12.44, 14.44, 16.44, 18.44

Deflection meets L/360 live and L/240 total load.

2 COMPLETE TRUSSES REQUIRED

Nailing Schedule: (10d_Common_(0.148"x3",_min.)_nails)
Top Chord: 1 Row @12.00" o.c.
Bot Chord: 1 Row @12.00" o.c.
Webs : 1 Row @ 4" o.c.
Use equal spacing between rows and stagger nails in each row to avoid splitting.

110 mph wind, 15.00 ft mean hgt, ASCE 7-98, CLOSED bldg, not located within 6.50 ft from roof edge, CAT II, EXP B, wind TC DL=2.8 psf, wind BC DL=2.2 psf.

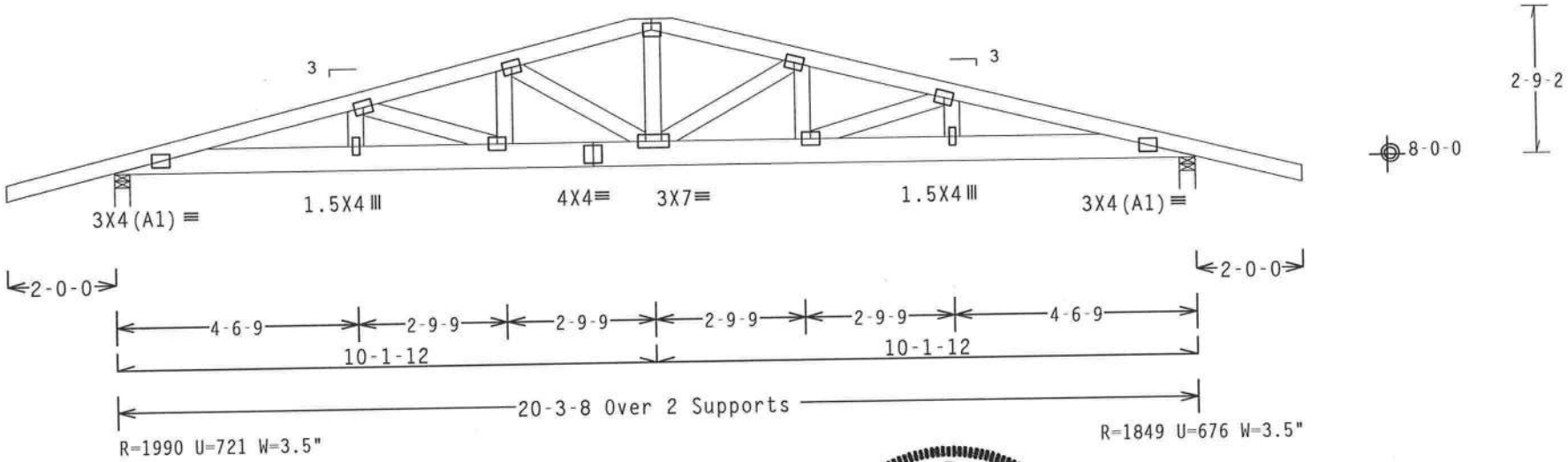

Note: All Plates Are 3X4 Except As Shown.

PLT TYP. Wave TPI Design Crit: TPI-1995(STD)/FBC 7.0 [illegible]05.10 QTY:1 FL/-/4/-/-/R/- Scale =.3125"/Ft.

ALPINE
Alpine Engineered Products, Inc.
1950 Marley Drive
Haines City, FL 33844

WARNING TRUSSES REQUIRE EXTREME CARE IN FABRICATION, HANDLING, SHIPPING, INSTALLING AND BRACING. REFER TO BCSI 1-03 (BUILDING COMPONENT SAFETY INFORMATION), PUBLISHED BY TPI (TRUSS PLATE INSTITUTE, 583 D'ONOFRIO DR., SUITE 200, MADISON, WI 53719) AND WTCA (WOOD TRUSS COUNCIL OF AMERICA, 6300 ENTERPRISE LN MADISON, WI 53719) FOR SAFETY PRACTICES PRIOR TO PERFORMING THESE FUNCTIONS. UNLESS OTHERWISE INDICATED TOP CHORD SHALL HAVE PROPERLY ATTACHED STRUCTURAL PANELS AND BOTTOM CHORD SHALL HAVE A PROPERLY ATTACHED RIGID CEILING.

IMPORTANT FURNISH A COPY OF THIS DESIGN TO THE INSTALLATION CONTRACTOR. ALPINE ENGINEERED PRODUCTS, INC. SHALL NOT BE RESPONSIBLE FOR ANY DEVIATION FROM THIS DESIGN; ANY FAILURE TO BUILD THE TRUSS IN CONFORMANCE WITH TPI; OR FABRICATING, HANDLING, SHIPPING, INSTALLING & BRACING OF TRUSSES. DESIGN CONFORMS WITH APPLICABLE PROVISIONS OF NDS (NATIONAL DESIGN SPEC. BY AF&PA) AND TPI. ALPINE CONNECTOR PLATES ARE MADE OF 20/18/16GA (W,H/S/K) ASTM A653 GRADE 40/60 (W, K/H,S) GALV. STEEL. APPLY PLATES TO EACH FACE OF TRUSS AND, UNLESS OTHERWISE LOCATED ON THIS DESIGN, POSITION PER DRAWINGS 160A-Z. ANY INSPECTION OF PLATES FOLLOWED BY (1) SHALL BE PER ANNEX A3 OF TPI1-2002 SEC.3. A SEAL ON THIS DRAWING INDICATES ACCEPTANCE OF PROFESSIONAL ENGINEERING RESPONSIBILITY SOLELY FOR THE TRUSS COMPONENT DESIGN SHOWN. THE SUITABILITY AND USE OF THIS COMPONENT FOR ANY BUILDING IS THE RESPONSIBILITY OF THE BUILDING DESIGNER PER ANSI/TPI 1 SEC. 2.

ARTHUR R. FISHER
LICENSE
No.59687
STATE OF FLORIDA
PROFESSIONAL ENGINEER

Jul 06 '05

TC LL	20.0 PSF	REF R487-- 41638
TC DL	10.0 PSF	DATE 07/06/05
BC DL	10.0 PSF	DRW HCUSR487 05187023
BC LL	0.0 PSF	HC-ENG DF/AF
TOT.LD.	40.0 PSF	SEQN- 145702
DUR.FAC.	1.25	
SPACING	24.0"	JREF- 1S0I487_Z03

(5-286-ED & KIM CARTER - CJ5)

Top chord 2x4 SP #2 Dense
Bot chord 2x4 SP #2 Dense

Deflection meets L/360 live and L/240 total load.

110 mph wind, 8.70 ft mean hgt, ASCE 7-98, CLOSED bldg, not located within 4.50 ft from roof edge, CAT II, EXP B, wind TC DL=2.8 psf, wind BC DL=2.2 psf.

Provide (2) 16d common nails(0.162"x3.5"), toe nailed at Top chord.
Provide (2) 16d common nails(0.162"x3.5"), toe nailed at Bot chord.

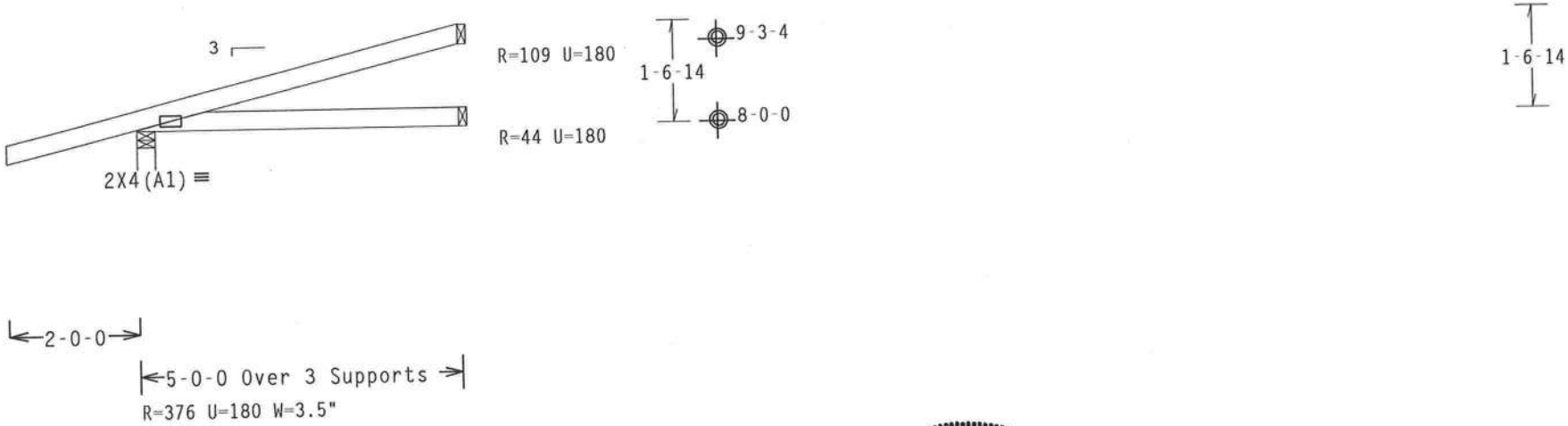

PLT TYP. Wave TPI

Design Crit: TPI-1995(STD)/FBC 7.04 0805 MC 8

FL/-/4/-/-/R/-

Scale =.375"/Ft.

ALPINE

Alpine Engineered Products, Inc.
1950 Marley Drive
Haines City, FL 33844

WARNING TRUSSES REQUIRE EXTREME CARE IN FABRICATION, HANDLING, SHIPPING, INSTALLING AND BRACING. REFER TO BCSI 1-03 (BUILDING COMPONENT SAFETY INFORMATION), PUBLISHED BY TPI (TRUSS PLATE INSTITUTE, 583 D'ONOFRIO DR., SUITE 200, MADISON, WI 53719) AND WTCA (WOOD TRUSS COUNCIL OF AMERICA, 6300 ENTERPRISE LN, MADISON, WI 53719) FOR SAFETY PRACTICES PRIOR TO PERFORMING THESE FUNCTIONS. UNLESS OTHERWISE INDICATED, TOP CHORD SHALL HAVE PROPERLY ATTACHED STRUCTURAL PANELS AND BOTTOM CHORD SHALL HAVE A PROPERLY ATTACHED RIGID CEILING.

IMPORTANT FURNISH A COPY OF THIS DESIGN TO THE INSTALLATION CONTRACTOR. ALPINE ENGINEERED PRODUCTS, INC. SHALL NOT BE RESPONSIBLE FOR ANY DEVIATION FROM THIS DESIGN; ANY FAILURE TO BUILD THE TRUSS IN CONFORMANCE WITH TPI; OR FABRICATING, HANDLING, SHIPPING, INSTALLING & BRACING OF TRUSSES. DESIGN CONFORMS WITH APPLICABLE PROVISIONS OF NDS (NATIONAL DESIGN SPEC. BY AF&PA) AND TPI. ALPINE CONNECTOR PLATES ARE MADE OF 20/18/16GA (W,H/S/K) ASTM A653 GRADE 40/60 (W, K/H,S) GALV. STEEL. APPLY PLATES TO EACH FACE OF TRUSS AND, UNLESS OTHERWISE LOCATED ON THIS DESIGN, POSITION PER DRAWINGS 160A-Z. ANY INSPECTION OF PLATES FOLLOWED BY (1) SHALL BE PER ANNEX A3 OF TPI1-2002 SEC.3. A SEAL ON THIS DRAWING INDICATES ACCEPTANCE OF PROFESSIONAL ENGINEERING RESPONSIBILITY SOLELY FOR THE TRUSS COMPONENT DESIGN SHOWN. THE SUITABILITY AND USE OF THIS COMPONENT FOR ANY BUILDING IS THE RESPONSIBILITY OF THE BUILDING DESIGNER PER ANSI/TPI 1 SEC. 2.

ARTHUR R. FISHER
LICENSE
No. 59687
STATE OF FLORIDA
PROFESSIONAL ENGINEER
Jul 06 '05

TC LL	20.0 PSF	REF R487-- 41639
TC DL	10.0 PSF	DATE 07/06/05
BC DL	10.0 PSF	DRW HCUSR487 05187015
BC LL	0.0 PSF	HC-ENG DF/AF
TOT.LD.	40.0 PSF	SEQN- 117763
DUR.FAC.	1.25	
SPACING	24.0"	JREF- 1SOI487_Z03

(5-286-ED & KIM CARTER - HJ7)

Top chord 2x4 SP #2 Dense
Bot chord 2x4 SP #2 Dense
Webs 2x4 SP #3

Hipjack supports 7-0-0 setback jacks with no webs.

Provide (2) 16d common nails(0.162"x3.5"), toe nailed at Top chord.
Provide (3) 16d common nails(0.162"x3.5"), toe nailed at Bot chord.

110 mph wind, 15.00 ft mean hgt, ASCE 7-98, CLOSED bldg, Located anywhere in roof, CAT II, EXP B, wind TC DL=2.8 psf, wind BC DL=2.2 psf.

Deflection meets L/360 live and L/240 total load.

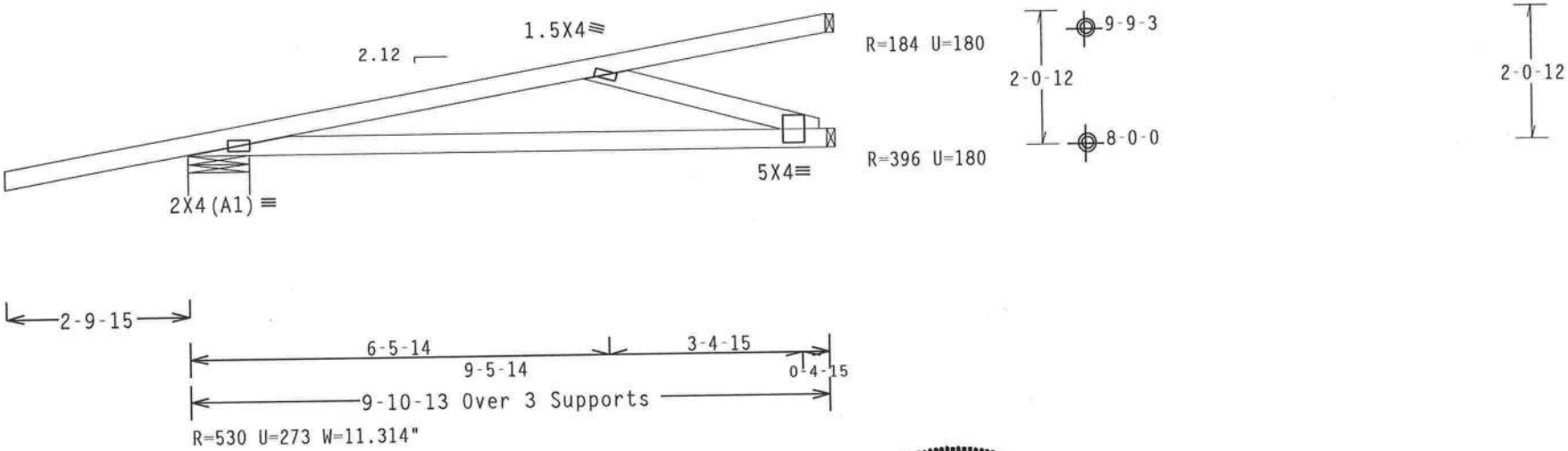

PLT TYP. Wave TPI

Design Crit: TPI-1995(STD)/FBC

7.0 [illegible] 4

FL/-/4/-/-/R/-

Scale =.375"/Ft.

ALPINE

Alpine Engineered Products, Inc.
1950 Marley Drive
Haines City, FL 33844

WARNING TRUSSES REQUIRE EXTREME CARE IN FABRICATION, HANDLING, SHIPPING, INSTALLING AND BRACING. REFER TO BCSI 1-03 (BUILDING COMPONENT SAFETY INFORMATION), PUBLISHED BY TPI (TRUSS PLATE INSTITUTE, 583 D'ONOFRIO DR., SUITE 200, MADISON, WI 53719) AND WTCA (WOOD TRUSS COUNCIL OF AMERICA, 6300 ENTERPRISE LN MADISON, WI 53719) FOR SAFETY PRACTICES PRIOR TO PERFORMING THESE FUNCTIONS. UNLESS OTHERWISE INDICATED TOP CHORD SHALL HAVE PROPERLY ATTACHED STRUCTURAL PANELS AND BOTTOM CHORD SHALL HAVE A PROPERLY ATTACHED RIGID CEILING.

IMPORTANT FURNISH A COPY OF THIS DESIGN TO THE INSTALLATION CONTRACTOR. ALPINE ENGINEERED PRODUCTS, INC. SHALL NOT BE RESPONSIBLE FOR ANY DEVIATION FROM THIS DESIGN; ANY FAILURE TO BUILD THE TRUSS IN CONFORMANCE WITH TPI; OR FABRICATING, HANDLING, SHIPPING, INSTALLING & BRACING OF TRUSSES. DESIGN CONFORMS WITH APPLICABLE PROVISIONS OF NDS (NATIONAL DESIGN SPEC, BY AF&PA) AND TPI. ALPINE CONNECTOR PLATES ARE MADE OF 20/18/16GA (W,H/S/K) ASTM A653 GRADE 40/60 (W, K/H,S) GALV. STEEL. APPLY PLATES TO EACH FACE OF TRUSS AND, UNLESS OTHERWISE LOCATED ON THIS DESIGN, POSITION PER DRAWINGS 160A-Z. ANY INSPECTION OF PLATES FOLLOWED BY (1) SHALL BE PER ANNEX A3 OF TPI1-2002 SEC.3. A SEAL ON THIS DRAWING INDICATES ACCEPTANCE OF PROFESSIONAL ENGINEERING RESPONSIBILITY SOLELY FOR THE TRUSS COMPONENT DESIGN SHOWN. THE SUITABILITY AND USE OF THIS COMPONENT FOR ANY BUILDING IS THE RESPONSIBILITY OF THE BUILDING DESIGNER PER ANSI/TPI 1 SEC. 2.

ARTHUR R. FISHER
LICENSE
No. 59687
STATE OF FLORIDA
PROFESSIONAL ENGINEER

Jul 06 '05

TC LL	20.0 PSF	REF R487-- 41640
TC DL	10.0 PSF	DATE 07/06/05
BC DL	10.0 PSF	DRW HCUSR487 05187016
BC LL	0.0 PSF	HC-ENG DF/AF
TOT.LD.	40.0 PSF	SEQN- 117798
DUR.FAC.	1.25	
SPACING	24.0"	JREF- 1S0I487_Z03

(5-286-ED & KIM CARTER - CJ3)

Top chord 2x4 SP #2 Dense
Bot chord 2x4 SP #2 Dense

Deflection meets L/360 live and L/240 total load.

110 mph wind, 8.45 ft mean hgt, ASCE 7-98, CLOSED bldg, Located anywhere in roof, CAT II, EXP B, wind TC DL=2.8 psf, wind BC DL=2.2 psf.

Provide (2) 16d common nails(0.162"x3.5"), toe nailed at Top chord.
Provide (2) 16d common nails(0.162"x3.5"), toe nailed at Bot chord.

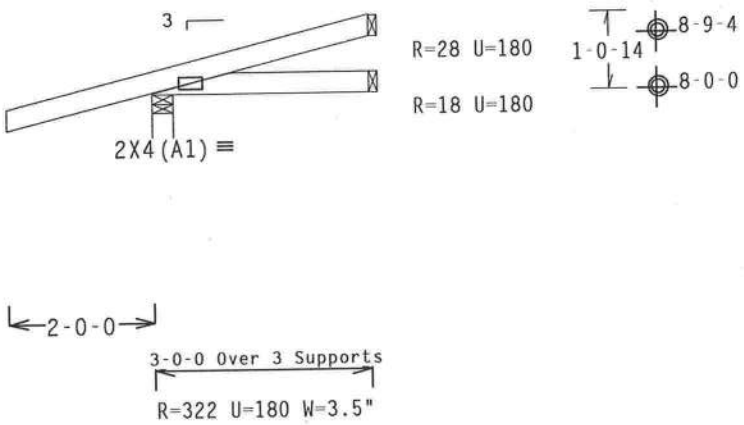

PLT TYP. Wave TPI | Design Crit: TPI-1995(STD)/FBC | 7.0 | 080516 | SPI 8 | FL/-/4/-/-/R/- | Scale =.375"/Ft.

ALPINE
Alpine Engineered Products, Inc.
1950 Marley Drive
Haines City, FL 33844
FL Certificate of Authorization # 567

WARNING TRUSSES REQUIRE EXTREME CARE IN FABRICATION, HANDLING, SHIPPING, INSTALLING AND BRACING. REFER TO BCSI 1-03 (BUILDING COMPONENT SAFETY INFORMATION), PUBLISHED BY TPI (TRUSS PLATE INSTITUTE, 583 D'ONOFRIO DR., SUITE 200, MADISON, WI 53719) AND WTCA (WOOD TRUSS COUNCIL OF AMERICA, 6300 ENTERPRISE LN, MADISON, WI 53719) FOR SAFETY PRACTICES PRIOR TO PERFORMING THESE FUNCTIONS. UNLESS OTHERWISE INDICATED, TOP CHORD SHALL HAVE PROPERLY ATTACHED STRUCTURAL PANELS AND BOTTOM CHORD SHALL HAVE A PROPERLY ATTACHED RIGID CEILING.

IMPORTANT FURNISH A COPY OF THIS DESIGN TO THE INSTALLATION CONTRACTOR. ALPINE ENGINEERED PRODUCTS, INC. SHALL NOT BE RESPONSIBLE FOR ANY DEVIATION FROM THIS DESIGN; ANY FAILURE TO BUILD THE TRUSS IN CONFORMANCE WITH TPI; OR FABRICATING, HANDLING, SHIPPING, INSTALLING & BRACING OF TRUSSES. DESIGN CONFORMS WITH APPLICABLE PROVISIONS OF NDS (NATIONAL DESIGN SPEC, BY AF&PA) AND TPI. ALPINE CONNECTOR PLATES ARE MADE OF 20/18/16GA (W,H/S/K) ASTM A653 GRADE 40/60 (W, K/H,S) GALV. STEEL. APPLY PLATES TO EACH FACE OF TRUSS AND, UNLESS OTHERWISE LOCATED ON THIS DESIGN, POSITION PER DRAWINGS 160A-Z. ANY INSPECTION OF PLATES FOLLOWED BY (1) SHALL BE PER ANNEX A3 OF TPI1-2002 SEC.3. A SEAL ON THIS DRAWING INDICATES ACCEPTANCE OF PROFESSIONAL ENGINEERING RESPONSIBILITY SOLELY FOR THE TRUSS COMPONENT DESIGN SHOWN. THE SUITABILITY AND USE OF THIS COMPONENT FOR ANY BUILDING IS THE RESPONSIBILITY OF THE BUILDING DESIGNER PER ANSI/TPI 1 SEC. 2.

ARTHUR R. FISHER
LICENSE
No. 59687
STATE OF FLORIDA
PROFESSIONAL ENGINEER
Jul 06 '05

TC LL	20.0 PSF	REF R487-- 41641
TC DL	10.0 PSF	DATE 07/06/05
BC DL	10.0 PSF	DRW HCUSR487 05187017
BC LL	0.0 PSF	HC-ENG DF/AF
TOT.LD.	40.0 PSF	SEQN- 117768
DUR.FAC.	1.25	
SPACING	24.0"	JREF- 1SOI487_Z03

(5-286-ED & KIM CARTER - CJ1)

Top chord 2x4 SP #2 Dense
Bot chord 2x4 SP #2 Dense

110 mph wind, 8.20 ft mean hgt, ASCE 7-98, CLOSED bldg, Located anywhere in roof, CAT II, EXP B, wind TC DL=2.8 psf, wind BC DL=2.2 psf.

(**) 1 plate(s) require special positioning. Refer to scaled plate plot details for special positioning requirements.

Deflection meets L/360 live and L/240 total load.

PLT TYP. Wave TPI

Design Crit: TPI-1995(STD)/FBC 7.0 [illegible] FL/-/4/-/-/R/-

Scale =.375"/Ft.

WARNING TRUSSES REQUIRE EXTREME CARE IN FABRICATION, HANDLING, SHIPPING, INSTALLING AND BRACING. REFER TO BCSI 1-03 (BUILDING COMPONENT SAFETY INFORMATION), PUBLISHED BY TPI (TRUSS PLATE INSTITUTE, 583 D'ONOFRIO DR., SUITE 200, MADISON, WI 53719) AND WTCA (WOOD TRUSS COUNCIL OF AMERICA, 6300 ENTERPRISE LN, MADISON, WI 53719) FOR SAFETY PRACTICES PRIOR TO PERFORMING THESE FUNCTIONS. UNLESS OTHERWISE INDICATED, TOP CHORD SHALL HAVE PROPERLY ATTACHED STRUCTURAL PANELS AND BOTTOM CHORD SHALL HAVE A PROPERLY ATTACHED RIGID CEILING.

IMPORTANT FURNISH A COPY OF THIS DESIGN TO THE INSTALLATION CONTRACTOR. ALPINE ENGINEERED PRODUCTS, INC. SHALL NOT BE RESPONSIBLE FOR ANY DEVIATION FROM THIS DESIGN; ANY FAILURE TO BUILD THE TRUSS IN CONFORMANCE WITH TPI; OR FABRICATING, HANDLING, SHIPPING, INSTALLING & BRACING OF TRUSSES. DESIGN CONFORMS WITH APPLICABLE PROVISIONS OF NDS (NATIONAL DESIGN SPEC, BY AF&PA) AND TPI. ALPINE CONNECTOR PLATES ARE MADE OF 20/18/16GA (W,H/S/K) ASTM A653 GRADE 40/60 (W, K/H,S) GALV. STEEL. APPLY PLATES TO EACH FACE OF TRUSS AND, UNLESS OTHERWISE LOCATED ON THIS DESIGN, POSITION PER DRAWINGS 160A-Z. ANY INSPECTION OF PLATES FOLLOWED BY (I) SHALL BE PER ANNEX A3 OF TPI1-2002 SEC.3. A SEAL ON THIS DRAWING INDICATES ACCEPTANCE OF PROFESSIONAL ENGINEERING RESPONSIBILITY SOLELY FOR THE TRUSS COMPONENT DESIGN SHOWN. THE SUITABILITY AND USE OF THIS COMPONENT FOR ANY BUILDING IS THE RESPONSIBILITY OF THE BUILDING DESIGNER PER ANSI/TPI 1 SEC. 2.

ALPINE

Alpine Engineered Products, Inc.
1950 Marley Drive
Haines City, FL 33844
FL Certificate of Authorization # 567

ARTHUR R. FISHER
LICENSE
No. 59687
STATE OF FLORIDA
PROFESSIONAL ENGINEER

Jul 06 '05

TC LL	20.0 PSF	REF R487-- 41642
TC DL	10.0 PSF	DATE 07/06/05
BC DL	10.0 PSF	DRW HCUSR487 05187018
BC LL	0.0 PSF	HC-ENG DF/AF
TOT.LD.	40.0 PSF	SEQN- 117786
DUR.FAC.	1.25	
SPACING	24.0"	JREF- 1SOI487_Z03

(5-286-ED & KIM CARTER - EJ7)

Top chord 2x4 SP #2 Dense
Bot chord 2x4 SP #2 Dense

Deflection meets L/360 live and L/240 total load.

110 mph wind, 8.95 ft mean hgt, ASCE 7-98, CLOSED bldg, not located within 4.50 ft from roof edge, CAT II, EXP B, wind TC DL=2.8 psf, wind BC DL=2.2 psf.

Provide (2) 16d common nails(0.162"x3.5"), toe nailed at Top chord.
Provide (2) 16d common nails(0.162"x3.5"), toe nailed at Bot chord.

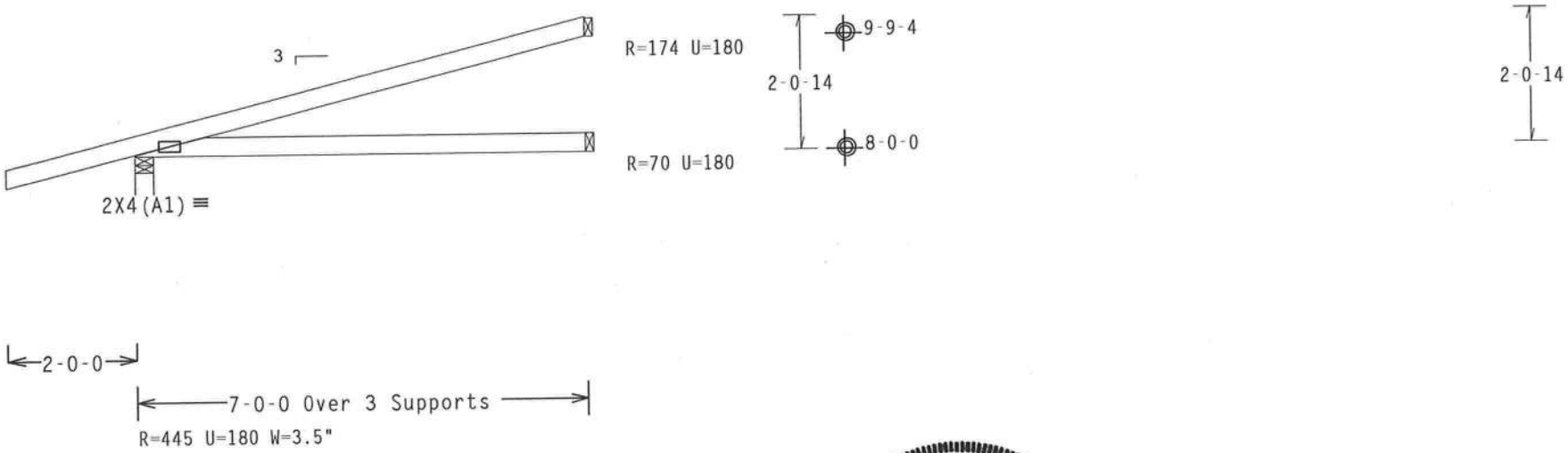

PLT TYP. Wave TPI

Design Crit: TPI-1995(STD)/FBC

7.0 . 1805.16 QTY 7

FL/-/4/-/-/R/-

Scale =.375"/Ft.

ALPINE

Alpine Engineered Products, Inc.
1950 Marley Drive
Haines City, FL 33844
FL Certificate of Authorization # 567

WARNING TRUSSES REQUIRE EXTREME CARE IN FABRICATION, HANDLING, SHIPPING, INSTALLING AND BRACING. REFER TO BCSI 1-03 (BUILDING COMPONENT SAFETY INFORMATION), PUBLISHED BY TPI (TRUSS PLATE INSTITUTE, 583 D'ONOFRIO DR., SUITE 200, MADISON, WI 53719) AND WTCA (WOOD TRUSS COUNCIL OF AMERICA, 6300 ENTERPRISE LN, MADISON, WI 53719) FOR SAFETY PRACTICES PRIOR TO PERFORMING THESE FUNCTIONS. UNLESS OTHERWISE INDICATED, TOP CHORD SHALL HAVE PROPERLY ATTACHED STRUCTURAL PANELS AND BOTTOM CHORD SHALL HAVE A PROPERLY ATTACHED RIGID CEILING.

IMPORTANT FURNISH A COPY OF THIS DESIGN TO THE INSTALLATION CONTRACTOR. ALPINE ENGINEERED PRODUCTS, INC. SHALL NOT BE RESPONSIBLE FOR ANY DEVIATION FROM THIS DESIGN; ANY FAILURE TO BUILD THE TRUSS IN CONFORMANCE WITH TPI; OR FABRICATING, HANDLING, SHIPPING, INSTALLING & BRACING OF TRUSSES. DESIGN CONFORMS WITH APPLICABLE PROVISIONS OF NDS (NATIONAL DESIGN SPEC. BY AF&PA) AND TPI. ALPINE CONNECTOR PLATES ARE MADE OF 20/18/16GA (W.H/S/K) ASTM A653 GRADE 40/60 (W. K/H.S) GALV. STEEL. APPLY PLATES TO EACH FACE OF TRUSS AND, UNLESS OTHERWISE LOCATED ON THIS DESIGN, POSITION PER DRAWINGS 160A-Z. ANY INSPECTION OF PLATES FOLLOWED BY (1) SHALL BE PER ANNEX A3 OF TPI1-2002 SEC.3. A SEAL ON THIS DRAWING INDICATES ACCEPTANCE OF PROFESSIONAL ENGINEERING RESPONSIBILITY SOLELY FOR THE TRUSS COMPONENT DESIGN SHOWN. THE SUITABILITY AND USE OF THIS COMPONENT FOR ANY BUILDING IS THE RESPONSIBILITY OF THE BUILDING DESIGNER PER ANSI/TPI 1 SEC. 2.

ARTHUR R. FISHER
LICENSE
No. 59687
STATE OF FLORIDA
PROFESSIONAL ENGINEER

Jul 06 '05

TC LL	20.0 PSF	REF R487-- 41643
TC DL	10.0 PSF	DATE 07/06/05
BC DL	10.0 PSF	DRW HCUSR487 05187019
BC LL	0.0 PSF	HC-ENG DF/AF
TOT.LD.	40.0 PSF	SEQN- 117790
DUR.FAC.	1.25	
SPACING	24.0"	JREF- 1SOI487_Z03

(5-286-ED & KIM CARTER - H7M)

Top chord 2x4 SP #2 Dense
Bot chord 2x4 SP #2 Dense
Webs 2x4 SP #3

Deflection meets L/360 live and L/240 total load.

110 mph wind, 15.00 ft mean hgt, ASCE 7-98, CLOSED bldg, Located anywhere in roof, CAT II, EXP B, wind TC DL=2.8 psf, wind BC DL=2.2 psf.

Right end vertical not exposed to wind pressure.

#1 hip supports 7-0-0 jacks with no webs.

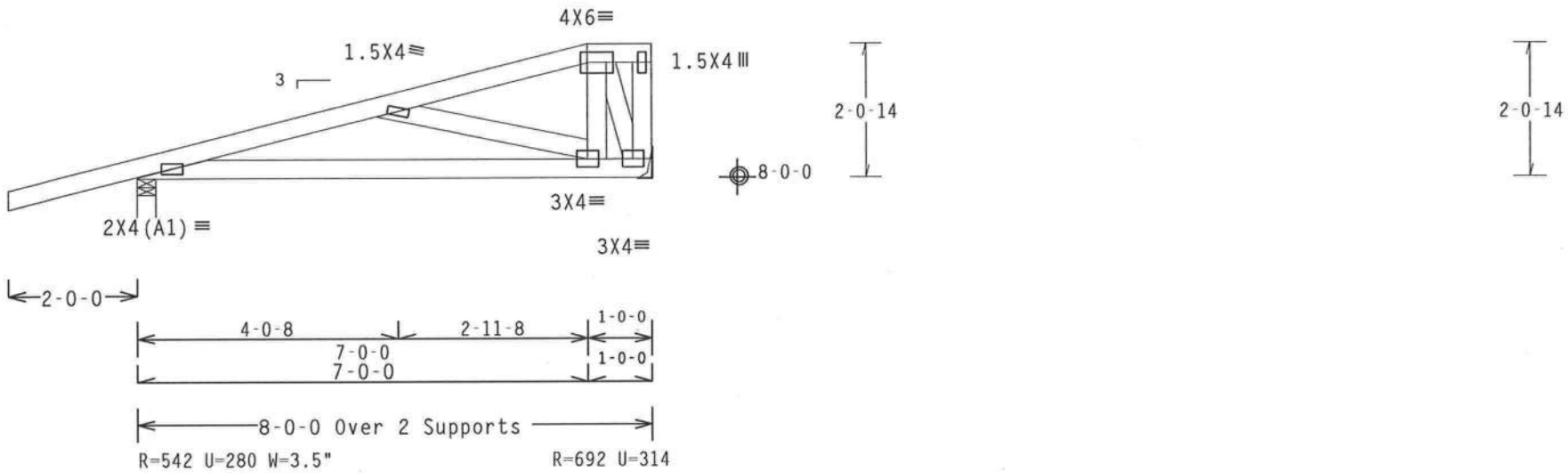

PLT TYP. Wave TPI Design Crit: TPI-1995(STD)/FBC 7.04.0835.13 FL/-/4/-/-/R/- Scale =.375"/Ft.

ALPINE
Alpine Engineered Products, Inc.
1950 Marley Drive
Haines City, FL 33844
FL Certificate of Authorization # 567

WARNING TRUSSES REQUIRE EXTREME CARE IN FABRICATION, HANDLING, SHIPPING, INSTALLING AND BRACING. REFER TO BCSI 1-03 (BUILDING COMPONENT SAFETY INFORMATION), PUBLISHED BY TPI (TRUSS PLATE INSTITUTE, 583 D'ONOFRIO DR., SUITE 200, MADISON, WI 53719) AND WTCA (WOOD TRUSS COUNCIL OF AMERICA, 6300 ENTERPRISE LN, MADISON, WI 53719) FOR SAFETY PRACTICES PRIOR TO PERFORMING THESE FUNCTIONS. UNLESS OTHERWISE INDICATED, TOP CHORD SHALL HAVE PROPERLY ATTACHED STRUCTURAL PANELS AND BOTTOM CHORD SHALL HAVE A PROPERLY ATTACHED RIGID CEILING.

IMPORTANT FURNISH A COPY OF THIS DESIGN TO THE INSTALLATION CONTRACTOR. ALPINE ENGINEERED PRODUCTS, INC. SHALL NOT BE RESPONSIBLE FOR ANY DEVIATION FROM THIS DESIGN; ANY FAILURE TO BUILD THE TRUSS IN CONFORMANCE WITH TPI; OR FABRICATING, HANDLING, SHIPPING, INSTALLING & BRACING OF TRUSSES. DESIGN CONFORMS WITH APPLICABLE PROVISIONS OF NDS (NATIONAL DESIGN SPEC. BY AF&PA) AND TPI. ALPINE CONNECTOR PLATES ARE MADE OF 20/18/16GA (W,H/S/K) ASTM A653 GRADE 40/60 (W, K/H,S) GALV. STEEL. APPLY PLATES TO EACH FACE OF TRUSS AND, UNLESS OTHERWISE LOCATED ON THIS DESIGN, POSITION PER DRAWINGS 160A-Z. ANY INSPECTION OF PLATES FOLLOWED BY (1) SHALL BE PER ANNEX A3 OF TPI1-2002 SEC.3. A SEAL ON THIS DRAWING INDICATES ACCEPTANCE OF PROFESSIONAL ENGINEERING RESPONSIBILITY SOLELY FOR THE TRUSS COMPONENT DESIGN SHOWN. THE SUITABILITY AND USE OF THIS COMPONENT FOR ANY BUILDING IS THE RESPONSIBILITY OF THE BUILDING DESIGNER PER ANSI/TPI 1 SEC. 2.

ARTHUR R. FISHER
LICENSE
No. 59687
STATE OF FLORIDA
PROFESSIONAL ENGINEER
Jul 06 '05

TC LL	20.0 PSF	REF	R487-- 41644
TC DL	10.0 PSF	DATE	07/06/05
BC DL	10.0 PSF	DRW	HCUSR487 05187020
BC LL	0.0 PSF	HC-ENG	DF/AF
TOT.LD.	40.0 PSF	SEQN-	145819
DUR.FAC.	1.25		
SPACING	24.0"	JREF-	1SOI487_Z03

(5-286-ED & KIM CARTER - M)

Top chord 2x4 SP #2 Dense
Bot chord 2x4 SP #2 Dense
Webs 2x4 SP #3

110 mph wind, 9.07 ft mean hgt, ASCE 7-98, CLOSED bldg, not located within 4.50 ft from roof edge, CAT II, EXP B, wind TC DL=2.8 psf, wind BC DL=2.2 psf.

Right end vertical not exposed to wind pressure.

Deflection meets L/360 live and L/240 total load.

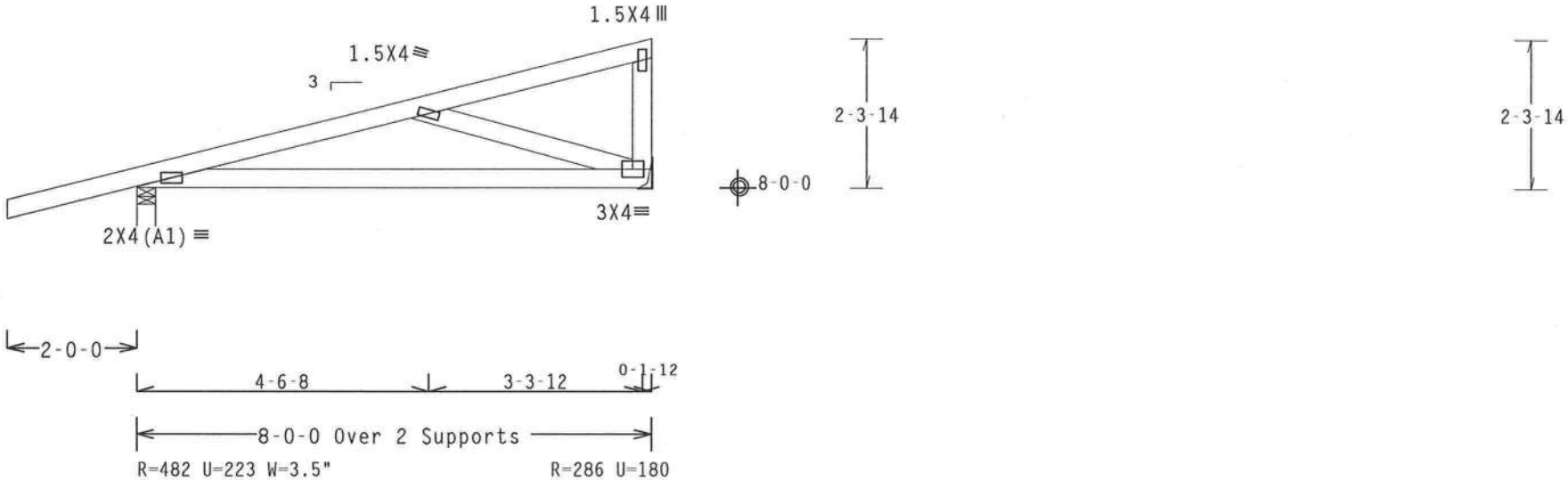

PLT TYP. Wave TPI Design Crit: TPI-1995(STD)/FBC 7.04 [illegible] 12 FL/-/4/-/-/R/- Scale =.375"/Ft.

ALPINE
Alpine Engineered Products, Inc.
1950 Marley Drive
Haines City, FL 33844
FL Certificate of Authorization # 567

WARNING TRUSSES REQUIRE EXTREME CARE IN FABRICATION, HANDLING, SHIPPING, INSTALLING AND BRACING. REFER TO BCSI 1-03 (BUILDING COMPONENT SAFETY INFORMATION), PUBLISHED BY TPI (TRUSS PLATE INSTITUTE, 583 D'ONOFRIO DR., SUITE 200, MADISON, WI 53719) AND WTCA (WOOD TRUSS COUNCIL OF AMERICA, 6300 ENTERPRISE LN, MADISON, WI 53719) FOR SAFETY PRACTICES PRIOR TO PERFORMING THESE FUNCTIONS. UNLESS OTHERWISE INDICATED, TOP CHORD SHALL HAVE PROPERLY ATTACHED STRUCTURAL PANELS AND BOTTOM CHORD SHALL HAVE A PROPERLY ATTACHED RIGID CEILING.

IMPORTANT FURNISH A COPY OF THIS DESIGN TO THE INSTALLATION CONTRACTOR. ALPINE ENGINEERED PRODUCTS, INC. SHALL NOT BE RESPONSIBLE FOR ANY DEVIATION FROM THIS DESIGN; ANY FAILURE TO BUILD THE TRUSS IN CONFORMANCE WITH TPI; OR FABRICATING, HANDLING, SHIPPING, INSTALLING & BRACING OF TRUSSES. DESIGN CONFORMS WITH APPLICABLE PROVISIONS OF NDS (NATIONAL DESIGN SPEC, BY AF&PA) AND TPI. ALPINE CONNECTOR PLATES ARE MADE OF 20/18/16GA (W,H/S/K) ASTM A653 GRADE 40/60 (W, K/H,S) GALV. STEEL. APPLY PLATES TO EACH FACE OF TRUSS AND, UNLESS OTHERWISE LOCATED ON THIS DESIGN, POSITION PER DRAWINGS 160A-Z. ANY INSPECTION OF PLATES FOLLOWED BY (1) SHALL BE PER ANNEX A3 OF TPI1-2002 SEC.3. A SEAL ON THIS DRAWING INDICATES ACCEPTANCE OF PROFESSIONAL ENGINEERING RESPONSIBILITY SOLELY FOR THE TRUSS COMPONENT DESIGN SHOWN. THE SUITABILITY AND USE OF THIS COMPONENT FOR ANY BUILDING IS THE RESPONSIBILITY OF THE BUILDING DESIGNER PER ANSI/TPI 1 SEC. 2.

ARTHUR R. FISHER
LICENSE
No. 59687
STATE OF FLORIDA
PROFESSIONAL ENGINEER
Jul 06 '05

TC LL	20.0 PSF	REF	R487-- 41645
TC DL	10.0 PSF	DATE	07/06/05
BC DL	10.0 PSF	DRW	HCUSR487 05187007
BC LL	0.0 PSF	HC-ENG	DF/AF *
TOT.LD.	40.0 PSF	SEQN-	145814
DUR.FAC.	1.25		
SPACING	24.0"	JREF-	1S0I487_Z03

(5-286-ED & KIM CARTER - AP)

Top chord 2x4 SP #2 Dense
Bot chord 2x4 SP #2 Dense
Webs 2x4 SP #3

Deflection meets L/360 live and L/240 total load.

Refer to DWG PIGBACKA0405 AND PIGBACKB0405 for piggyback details.
PORTION OF TRUSS UNDER PIGGYBACK IS TO BE BRACED @ 24" OC,
UNLESS OTHERWISE SPECIFIED.

110 mph wind, 19.42 ft mean hgt, ASCE 7-98, CLOSED bldg, not located within 4.50 ft from roof edge, CAT II, EXP B, wind TC DL=2.8 psf, wind BC DL=2.2 psf.

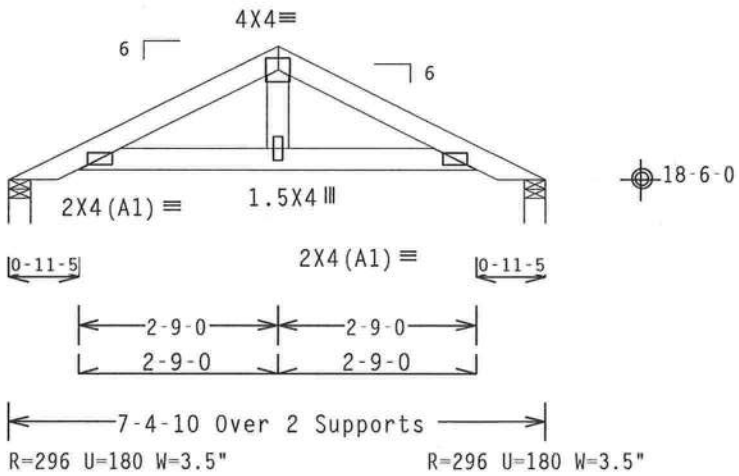

PLT TYP. Wave TPI Design Crit: TPI-1995(STD)/FBC 7.0.0.0905.16 QTY 31 FL/-/4/-/-/R/- Scale =.375"/Ft.

ALPINE
Alpine Engineered Products, Inc.
1950 Marley Drive
Haines City, FL 33844
FL Certificate of Authorization # 567

WARNING TRUSSES REQUIRE EXTREME CARE IN FABRICATION, HANDLING, SHIPPING, INSTALLING AND BRACING. REFER TO BCSI 1-03 (BUILDING COMPONENT SAFETY INFORMATION), PUBLISHED BY TPI (TRUSS PLATE INSTITUTE, 583 D'ONOFRIO DR., SUITE 200, MADISON, WI 53719) AND WTCA (WOOD TRUSS COUNCIL OF AMERICA, 6300 ENTERPRISE LN, MADISON, WI 53719) FOR SAFETY PRACTICES PRIOR TO PERFORMING THESE FUNCTIONS. UNLESS OTHERWISE INDICATED, TOP CHORD SHALL HAVE PROPERLY ATTACHED STRUCTURAL PANELS AND BOTTOM CHORD SHALL HAVE A PROPERLY ATTACHED RIGID CEILING.

IMPORTANT FURNISH A COPY OF THIS DESIGN TO THE INSTALLATION CONTRACTOR. ALPINE ENGINEERED PRODUCTS, INC. SHALL NOT BE RESPONSIBLE FOR ANY DEVIATION FROM THIS DESIGN; ANY FAILURE TO BUILD THE TRUSS IN CONFORMANCE WITH TPI; OR FABRICATING, HANDLING, SHIPPING, INSTALLING & BRACING OF TRUSSES. DESIGN CONFORMS WITH APPLICABLE PROVISIONS OF NDS (NATIONAL DESIGN SPEC, BY AF&PA) AND TPI. ALPINE CONNECTOR PLATES ARE MADE OF 20/18/16GA (W,H/S/K) ASTM A653 GRADE 40/60 (W, K/H,S) GALV. STEEL. APPLY PLATES TO EACH FACE OF TRUSS AND, UNLESS OTHERWISE LOCATED ON THIS DESIGN, POSITION PER DRAWINGS 160A-Z. ANY INSPECTION OF PLATES FOLLOWED BY (1) SHALL BE PER ANNEX A3 OF TPI1-2002 SEC.3. A SEAL ON THIS DRAWING INDICATES ACCEPTANCE OF PROFESSIONAL ENGINEERING RESPONSIBILITY SOLELY FOR THE TRUSS COMPONENT DESIGN SHOWN. THE SUITABILITY AND USE OF THIS COMPONENT FOR ANY BUILDING IS THE RESPONSIBILITY OF THE BUILDING DESIGNER PER ANSI/TPI 1 SEC. 2.

ARTHUR R. FISHER
LICENSE
No. 59687
STATE OF FLORIDA
PROFESSIONAL ENGINEER
Jul 06 '05

TC LL	20.0 PSF	REF R487-- 41646
TC DL	10.0 PSF	DATE 07/06/05
BC DL	10.0 PSF	DRW HCUSR487 05187021
BC LL	0.0 PSF	HC-ENG DF/AF
TOT.LD.	40.0 PSF	SEQN- 145663
DUR.FAC.	1.25	
SPACING	24.0"	JREF- 1SOI487_Z03

CLB WEB BRACE SUBSTITUTION

THIS DETAIL IS TO BE USED WHEN CONTINUOUS LATERAL BRACING (CLB) IS SPECIFIED ON AN ALPINE TRUSS DESIGN BUT AN ALTERNATIVE WEB BRACING METHOD IS DESIRED.

NOTES:

THIS DETAIL IS ONLY APPLICABLE FOR CHANGING THE SPECIFIED CLB SHOWN ON SINGLE PLY SEALED DESIGNS TO T-BRACING OR SCAB BRACING.

ALTERNATIVE BRACING SPECIFIED IN CHART BELOW MAY BE CONSERVATIVE. FOR MINIMUM ALTERNATIVE BRACING, RE-RUN DESIGN WITH APPROPRIATE BRACING.

WEB MEMBER SIZE	SPECIFIED CLB BRACING	ALTERNATIVE BRACING T OR L-BRACE	ALTERNATIVE BRACING SCAB BRACE
2X3 OR 2X4	1 ROW	2X4	1-2X4
2X3 OR 2X4	2 ROWS	2X6	2-2X4
2X6	1 ROW	2X4	1-2X6
2X6	2 ROWS	2X6	2-2X4(*)
2X8	1 ROW	2X6	1-2X8
2X8	2 ROWS	2X6	2-2X6(*)

T-BRACE, L-BRACE AND SCAB BRACE TO BE SAME SPECIES AND GRADE OR BETTER THAN WEB MEMBER UNLESS SPECIFIED OTHERWISE ON ENGINEER'S SEALED DESIGN.

(*) CENTER SCAB ON WIDE FACE OF WEB. APPLY (1) SCAB TO EACH FACE OF WEB.

T-BRACING OR L-BRACING:

APPLY TO EITHER SIDE OF WEB NARROW FACE

ATTACH WITH 16d NAILS AT 6" O.C.

BRACE IS A MINIMUM 80% OF WEB MEMBER LENGTH

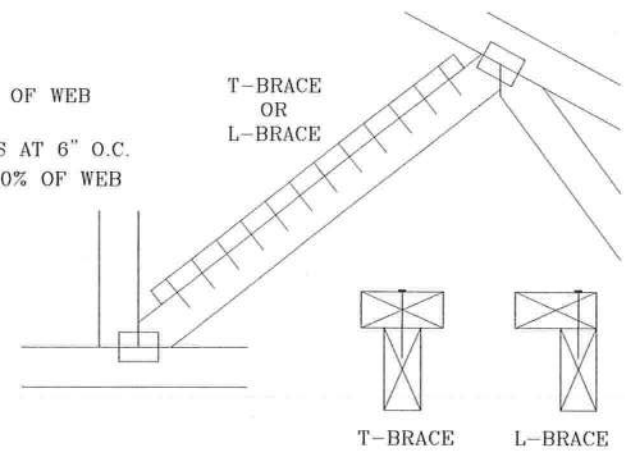

SCAB BRACING:

APPLY SCAB(S) TO WIDE FACE OF WEB.

NO MORE THAN (1) SCAB PER FACE.

ATTACH WITH 10d OR .128"x3" GUN NAILS AT 6" O.C. BRACE IS A MINIMUM 80% OF WEB MEMBER LENGTH

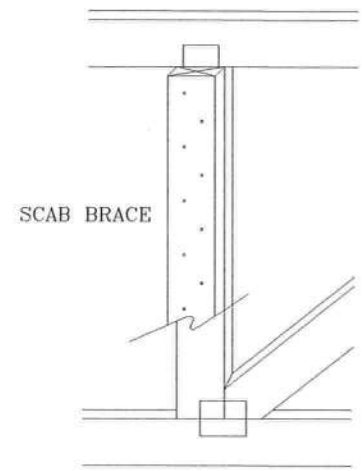

THIS DRAWING REPLACES DRAWING 579,640

ALPINE

ALPINE ENGINEERED PRODUCTS, INC.
POMPANO BEACH, FLORIDA

WARNING TRUSSES REQUIRE EXTREME CARE IN FABRICATING, HANDLING, SHIPPING, INSTALLING AND BRACING. REFER TO BCSI 1-03 (BUILDING COMPONENT SAFETY INFORMATION), PUBLISHED BY TPI (TRUSS PLATE INSTITUTE, 583 D'ONOFRIO DR., SUITE 200, MADISON, WI. 53719) AND WTCA (WOOD TRUSS COUNCIL OF AMERICA, 6300 ENTERPRISE LN, MADISON, WI 53719) FOR SAFETY PRACTICES PRIOR TO PERFORMING THESE FUNCTIONS. UNLESS OTHERWISE INDICATED, TOP CHORD SHALL HAVE PROPERLY ATTACHED STRUCTURAL PANELS AND BOTTOM CHORD SHALL HAVE A PROPERLY ATTACHED RIGID CEILING.

IMPORTANT FURNISH COPY OF THIS DESIGN TO INSTALLATION CONTRACTOR. ALPINE ENGINEERED PRODUCTS, INC., SHALL NOT BE RESPONSIBLE FOR ANY DEVIATION FROM THIS DESIGN; ANY FAILURE TO BUILD THE TRUSS IN CONFORMANCE WITH TPI; OR FABRICATING, HANDLING, SHIPPING, INSTALLING & BRACING OF TRUSSES. DESIGN CONFORMS WITH APPLICABLE PROVISIONS OF NDS (NATIONAL DESIGN SPEC. BY AF&PA) AND TPI. ALPINE CONNECTOR PLATES ARE MADE OF 20/18/16GA (W,H/S/K) ASTM A653 GRADE 40/60 (W,K/H,S) GALV. STEEL. APPLY PLATES TO EACH FACE OF TRUSS AND, UNLESS OTHERWISE LOCATED ON THIS DESIGN, POSITION PER DRAWINGS 160A-Z. ANY INSPECTION OF PLATES FOLLOWED BY (I) SHALL BE PER ANNEX A3 OF TPI 1-2002 SEC. 3. A SEAL ON THIS DRAWING INDICATES ACCEPTANCE OF PROFESSIONAL ENGINEERING RESPONSIBILITY SOLELY FOR THE TRUSS COMPONENT DESIGN SHOWN. THE SUITABILITY AND USE OF THIS COMPONENT FOR ANY BUILDING IS THE RESPONSIBILITY OF THE BUILDING DESIGNER, PER ANSI/TPI 1 SEC. 2.

ARTHUR R. FISHER
LICENSE
No. 59687
STATE OF
FLORIDA
PROFESSIONAL ENGINEER

TC LL	PSF	REF	CLB SUBST.
TC DL	PSF	DATE	11/26/03
BC DL	PSF	DRWG	BRCLBSUB1103
BC LL	PSF	-ENG	MLH/KAR
TOT. LD.	PSF		
DUR. FAC.			
SPACING			

ASCE 7-98: 110 MPH WIND SPEED, 15' MEAN HEIGHT, ENCLOSED, I = 1.00, EXPOSURE C

MAX GABLE VERTICAL LENGTH

2X4 GABLE VERTICAL SPACING	SPECIES	BRACE GRADE	NO BRACES	(1) 1X4 "L" BRACE * GROUP A	(1) 1X4 "L" BRACE * GROUP B	(1) 2X4 "L" BRACE * GROUP A	(1) 2X4 "L" BRACE * GROUP B	(2) 2X4 "L" BRACE ** GROUP A	(2) 2X4 "L" BRACE ** GROUP B	(1) 2X6 "L" BRACE * GROUP A	(1) 2X6 "L" BRACE * GROUP B	(2) 2X6 "L" BRACE ** GROUP A	(2) 2X6 "L" BRACE ** GROUP B
24" O.C.	SPF HF	#1 / #2	3' 10"	6' 8"	6' 10"	7' 11"	8' 1"	9' 5"	9' 8"	12' 5"	12' 9"	14' 0"	14' 0"
		#3	3' 9"	6' 0"	6' 0"	7' 11"	7' 11"	9' 5"	9' 5"	12' 4"	12' 4"	14' 0"	14' 0"
		STUD	3' 9"	6' 0"	6' 0"	7' 11"	7' 11"	9' 5"	9' 5"	12' 3"	12' 3"	14' 0"	14' 0"
		STANDARD	3' 9"	5' 2"	5' 2"	6' 9"	6' 9"	9' 1"	9' 1"	10' 7"	10' 7"	14' 0"	14' 0"
	SP DFL	#1	4' 3"	6' 8"	7' 2"	7' 11"	8' 6"	9' 5"	10' 2"	12' 5"	13' 5"	14' 0"	14' 0"
		#2	4' 2"	6' 8"	7' 2"	7' 11"	8' 6"	9' 5"	10' 2"	12' 5"	13' 5"	14' 0"	14' 0"
		#3	4' 0"	6' 2"	6' 2"	7' 11"	8' 1"	9' 5"	9' 11"	12' 5"	12' 8"	14' 0"	14' 0"
		STUD	4' 0"	6' 1"	6' 1"	7' 11"	8' 0"	9' 5"	9' 11"	12' 5"	12' 6"	14' 0"	14' 0"
		STANDARD	3' 10"	5' 3"	5' 3"	6' 11"	6' 11"	9' 4"	9' 4"	10' 10"	10' 10"	14' 0"	14' 0"
16" O.C.	SPF HF	#1 / #2	4' 5"	7' 8"	7' 10"	9' 1"	9' 4"	10' 10"	11' 1"	14' 0"	14' 0"	14' 0"	14' 0"
		#3	4' 4"	7' 4"	7' 4"	9' 1"	9' 1"	10' 10"	10' 10"	14' 0"	14' 0"	14' 0"	14' 0"
		STUD	4' 4"	7' 4"	7' 4"	9' 1"	9' 1"	10' 10"	10' 10"	14' 0"	14' 0"	14' 0"	14' 0"
		STANDARD	4' 4"	6' 4"	6' 4"	8' 4"	8' 4"	10' 10"	10' 10"	12' 11"	12' 11"	14' 0"	14' 0"
	SP DFL	#1	4' 10"	7' 8"	8' 3"	9' 1"	9' 9"	10' 10"	11' 8"	14' 0"	14' 0"	14' 0"	14' 0"
		#2	4' 9"	7' 8"	8' 3"	9' 1"	9' 9"	10' 10"	11' 8"	14' 0"	14' 0"	14' 0"	14' 0"
		#3	4' 6"	7' 7"	7' 7"	9' 1"	9' 6"	10' 10"	11' 4"	14' 0"	14' 0"	14' 0"	14' 0"
		STUD	4' 6"	7' 6"	7' 6"	9' 1"	9' 6"	10' 10"	11' 4"	14' 0"	14' 0"	14' 0"	14' 0"
		STANDARD	4' 5"	6' 5"	6' 5"	8' 6"	8' 6"	10' 10"	11' 1"	13' 3"	13' 3"	14' 0"	14' 0"
12" O.C.	SPF HF	#1 / #2	4' 11"	8' 5"	8' 8"	10' 0"	10' 3"	11' 11"	12' 3"	14' 0"	14' 0"	14' 0"	14' 0"
		#3	4' 9"	8' 5"	8' 5"	10' 0"	10' 0"	11' 11"	11' 11"	14' 0"	14' 0"	14' 0"	14' 0"
		STUD	4' 9"	8' 5"	8' 5"	10' 0"	10' 0"	11' 11"	11' 11"	14' 0"	14' 0"	14' 0"	14' 0"
		STANDARD	4' 9"	7' 3"	7' 3"	9' 7"	9' 7"	11' 11"	11' 11"	14' 0"	14' 0"	14' 0"	14' 0"
	SP DFL	#1	5' 4"	8' 5"	9' 1"	10' 0"	10' 9"	11' 11"	12' 10"	14' 0"	14' 0"	14' 0"	14' 0"
		#2	5' 3"	8' 5"	9' 1"	10' 0"	10' 9"	11' 11"	12' 10"	14' 0"	14' 0"	14' 0"	14' 0"
		#3	5' 0"	8' 5"	8' 5"	10' 0"	10' 6"	11' 11"	12' 6"	14' 0"	14' 0"	14' 0"	14' 0"
		STUD	5' 0"	8' 5"	8' 7"	10' 0"	10' 6"	11' 11"	12' 6"	14' 0"	14' 0"	14' 0"	14' 0"
		STANDARD	4' 11"	7' 5"	7' 5"	9' 10"	9' 10"	11' 11"	12' 3"	14' 0"	14' 0"	14' 0"	14' 0"

BRACING GROUP SPECIES AND GRADES:

GROUP A:

SPRUCE-PINE-FIR

#1 / #2	STANDARD
#3	STUD

HEM-FIR

#2	STUD
#3	STANDARD

DOUGLAS FIR-LARCH

#3
STUD
STANDARD

SOUTHERN PINE

#3
STUD
STANDARD

GROUP B:

HEM-FIR

#1 & BTR
#1

SOUTHERN PINE

#1
#2

DOUGLAS FIR-LARCH

#1
#2

GABLE TRUSS DETAIL NOTES:

LIVE LOAD DEFLECTION CRITERIA IS L/240.

PROVIDE UPLIFT CONNECTIONS FOR 80 PLF OVER CONTINUOUS BEARING (5 PSF TC DEAD LOAD).

GABLE END SUPPORTS LOAD FROM 4' 0" OUTLOOKERS WITH 2' 0" OVERHANG, OR 12" PLYWOOD OVERHANG.

ATTACH EACH "L" BRACE WITH 10d NAILS.

* FOR (1) "L" BRACE: SPACE NAILS AT 2" O.C. IN 18" END ZONES AND 4" O.C. BETWEEN ZONES.

** FOR (2) "L" BRACES: SPACE NAILS AT 3" O.C. IN 18" END ZONES AND 6" O.C. BETWEEN ZONES.

"L" BRACING MUST BE A MINIMUM OF 80% OF WEB MEMBER LENGTH.

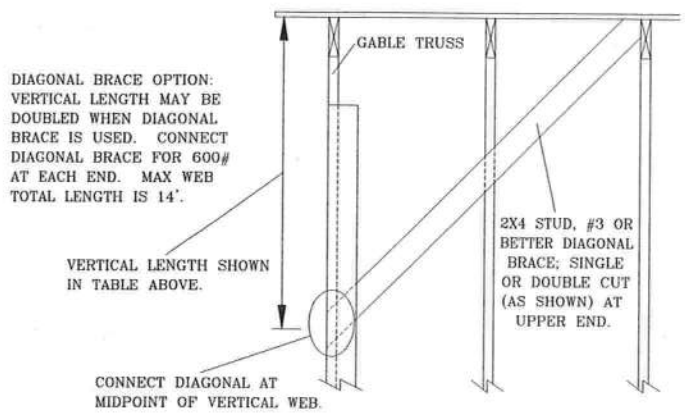

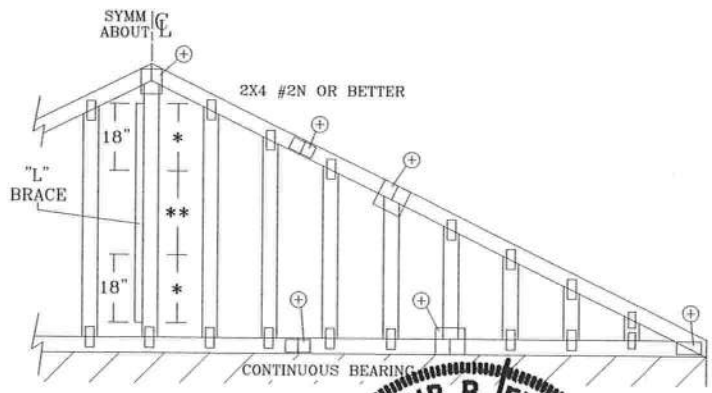

REFER TO CHART ABOVE FO[illegible] LENGTH.

GABLE VERTICAL PLATE SIZES

VERTICAL LENGTH	NO SPLICE
LESS THAN 4' 0"	1X4 OR 2X3
GREATER THAN 4' 0", BUT LESS THAN 11' 6"	2X4
GREATER THAN 11' 6"	2.5X4

\+ REFER TO COMMON TRUSS DESIGN FOR PEAK, SPLICE, AND HEEL PLATES.

ALPINE

ALPINE ENGINEERED PRODUCTS, INC.
POMPANO BEACH, FLORIDA

WARNING TRUSSES REQUIRE EXTREME CARE IN FABRICATING, HANDLING, SHIPPING, INSTALLING AND BRACING. REFER TO BCSI 1-03 (BUILDING COMPONENT SAFETY INFORMATION), PUBLISHED BY TPI (TRUSS PLATE INSTITUTE, 583 D'ONOFRIO DR., SUITE 200, MADISON, WI. 53719) AND WTCA (WOOD TRUSS COUNCIL OF AMERICA, 6300 ENTERPRISE LN, MADISON, WI 53719) FOR SAFETY PRACTICES PRIOR TO PERFORMING THESE FUNCTIONS. UNLESS OTHERWISE INDICATED, TOP CHORD SHALL HAVE PROPERLY ATTACHED STRUCTURAL PANELS AND BOTTOM CHORD SHALL HAVE A PROPERLY ATTACHED RIGID CEILING.

IMPORTANT FURNISH COPY OF THIS DESIGN TO INSTALLATION CONTRACTOR. ALPINE ENGINEERED PRODUCTS, INC., SHALL NOT BE RESPONSIBLE FOR ANY DEVIATION FROM THIS DESIGN; ANY FAILURE TO BUILD THE TRUSS IN CONFORMANCE WITH TPI; OR FABRICATING, HANDLING, SHIPPING, INSTALLING & BRACING OF TRUSSES. DESIGN CONFORMS WITH APPLICABLE PROVISIONS OF NDS (NATIONAL DESIGN SPEC. BY AF&PA) AND TPI. ALPINE CONNECTOR PLATES ARE MADE OF 20/18/16GA (W,H/S/K) ASTM A653 GRADE 40/60 (W,K/H,S) GALV. STEEL. APPLY PLATES TO EACH FACE OF TRUSS AND, UNLESS OTHERWISE LOCATED ON THIS DESIGN, POSITION PER DRAWINGS 160A-Z. ANY INSPECTION OF PLATES FOLLOWED BY (I) SHALL BE PER ANNEX A3 OF TPI 1-2002 SEC. 3. A SEAL ON THIS DRAWING INDICATES ACCEPTANCE OF PROFESSIONAL ENGINEERING RESPONSIBILITY SOLELY FOR THE TRUSS COMPONENT DESIGN SHOWN. THE SUITABILITY AND USE OF THIS COMPONENT FOR ANY BUILDING IS THE RESPONSIBILITY OF THE BUILDING DESIGNER, PER ANSI/TPI 1 SEC. 2.

ARTHUR R. FISHER
LICENSE
No 55687
STATE OF
FLORIDA
PROFESSIONAL ENGINEER

MAX. TOT. LD. 60 PSF

MAX. SPACING 24.0"

REF	ASCE7-98-GABI1015
DATE	11/26/03
DRWG	A11015EC1103
-ENG	

GABLE DETAIL
FOR LET-IN VERTICALS

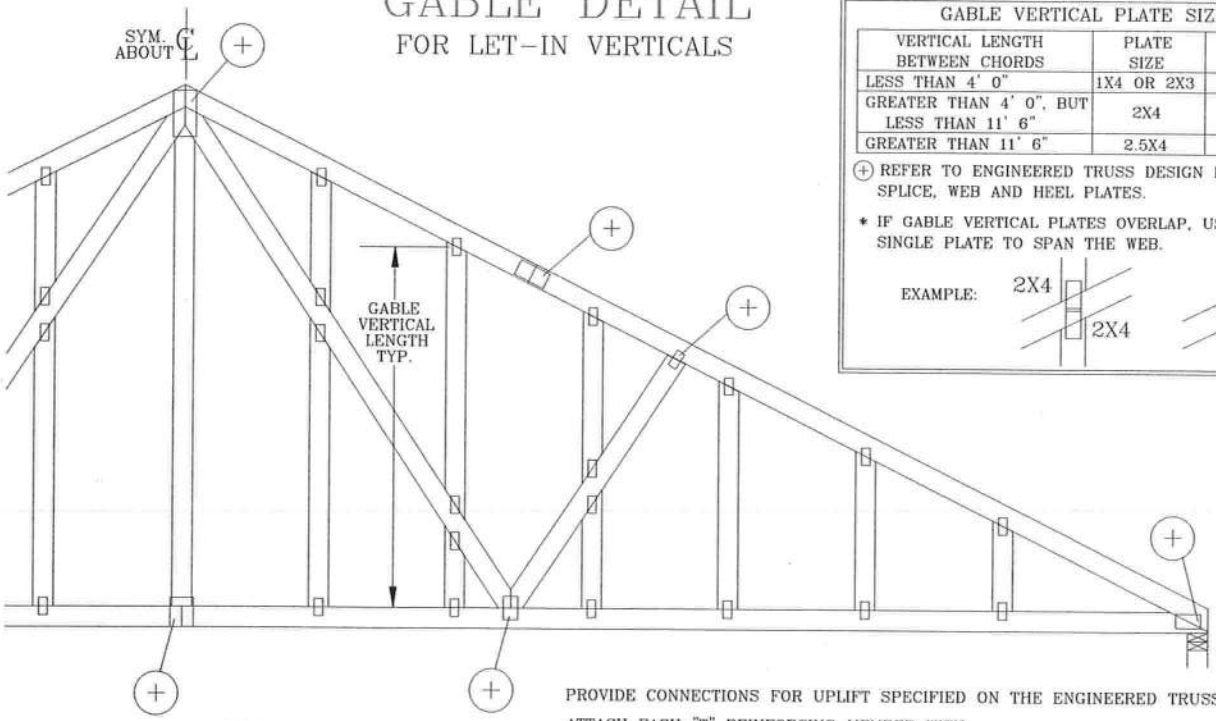

GABLE VERTICAL PLATE SIZES

VERTICAL LENGTH BETWEEN CHORDS	PLATE SIZE	IF PLATES OVERLAP*
LESS THAN 4' 0"	1X4 OR 2X3	2X8
GREATER THAN 4' 0", BUT LESS THAN 11' 6"	2X4	2X8
GREATER THAN 11' 6"	2.5X4	2.5X8

(+) REFER TO ENGINEERED TRUSS DESIGN FOR PEAK, SPLICE, WEB AND HEEL PLATES.

* IF GABLE VERTICAL PLATES OVERLAP, USE A SINGLE PLATE TO SPAN THE WEB.

EXAMPLE:

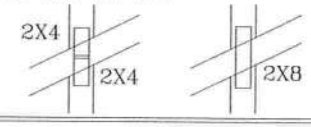

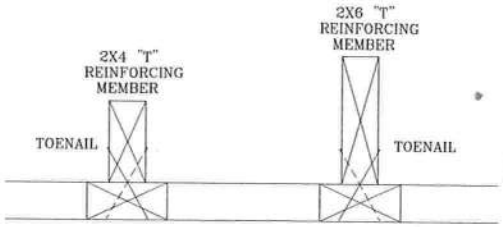

TO CONVERT FROM "L" TO "T" REINFORCING MEMBERS, MULTIPLY "T" FACTOR BY LENGTH (BASED ON GABLE VERTICAL SPECIES, GRADE AND SPACING) FOR (1) 2X4 "L" BRACE, GROUP A, OBTAINED FROM THE APPROPRIATE ALPINE GABLE DETAIL FOR ASCE OR SBCCI WIND LOAD.

MAXIMUM ALLOWABLE "T" REINFORCED GABLE VERTICAL LENGTH IS 14' FROM TOP TO BOTTOM CHORD.

WEB LENGTH INCREASE W/ "T" BRACE

WIND SPEED AND MRH	"T" REINF. MBR. SIZE	SBCCI	ASCE
110 MPH	2x4	10 %	10 %
15 FT	2x6	40 %	50 %
110 MPH	2x4	10 %	10 %
30 FT	2x6	50 %	50 %
100 MPH	2x4	10 %	10 %
15 FT	2x6	30 %	50 %
100 MPH	2x4	10 %	10 %
30 FT	2x6	40 %	40 %
90 MPH	2x4	20 %	10 %
15 FT	2x6	20 %	40 %
90 MPH	2x4	10 %	10 %
30 FT	2x6	30 %	50 %
80 MPH	2x4	10 %	20 %
15 FT	2x6	10 %	30 %
80 MPH	2x4	20 %	10 %
30 FT	2x6	20 %	40 %
70 MPH	2x4	0 %	20 %
15 FT	2x6	0 %	20 %
70 MPH	2x4	10 %	20 %
30 FT	2x6	10 %	30 %

EXAMPLE:
ASCE WIND SPEED = 100 MPH
MEAN ROOF HEIGHT = 30 FT
GABLE VERTICAL = 24" O.C. SP #3
"T" REINFORCING MEMBER SIZE = 2X4
"T" BRACE INCREASE (FROM ABOVE) = 10% = 1.10
(1) 2X4 "L" BRACE LENGTH = 6' 7"
MAXIMUM "T" REINFORCED GABLE VERTICAL LENGTH
1.10 x 6' 7" = 7' 3"

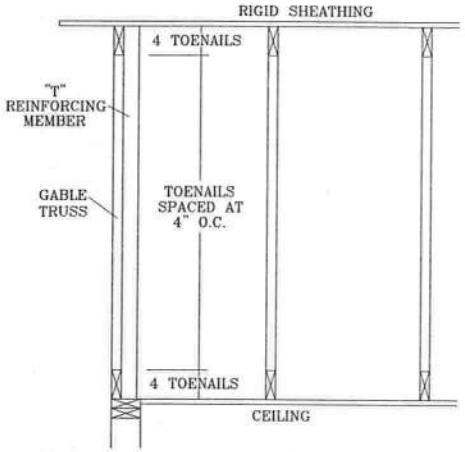

PROVIDE CONNECTIONS FOR UPLIFT SPECIFIED ON THE ENGINEERED TRUSS DESIGN.

ATTACH EACH "T" REINFORCING MEMBER WITH
HAND DRIVEN NAILS:
10d COMMON TOENAILS AT 4" O.C. PLUS (4) 16d COMMON TOENAILS IN TOP AND BOTTOM CHORD.
GUN DRIVEN NAILS – 0.131" X 3":
TOENAILS AT 4" O.C. PLUS (4) TOENAILS IN TOP AND BOTTOM CHORD.

THIS DETAIL TO BE USED WITH THE APPROPRIATE ALPINE GABLE DETAIL FOR ASCE OR SBCCI WIND LOAD.
ASCE 7-93 GABLE DETAIL DRAWINGS
A11015EN1103, A10015EN1103, A09015EN1103, A08015EN1103, A07015EN1103
A11030EN1103, A10030EN1103, A09030EN1103, A08030EN1103, A07030EN1103
ASCE 7-98 GABLE DETAIL DRAWINGS
A13015EC1103, A12015EC1103, A11015EC1103, A10015EC1103, A08515EC1103
A13030EC1103, A12030EC1103, A11030EC1103, A10030EC1103, A08530EC1103
SBCCI GABLE DETAIL DRAWINGS
S11015EN1103, S10015EN1103, S09015EN1103, S08015EN1103, S07015EN1103
S11030EN1103, S10030EN1103, S09030EN1103, S08030EN1103, S07030EN1103

SEE APPROPRIATE ALPINE GABLE DETAIL (ASCE OR SBCCI WIND LOAD) FOR MAXIMUM UNREINFORCED GABLE VERTICAL LENGTH.

ARTHUR R. FISHER LICENSED No. 35687 STATE OF FLORIDA PROFESSIONAL ENGINEER

REPLACES DRAWINGS GAB98117 876,719 & HC26294035

ALPINE

ALPINE ENGINEERED PRODUCTS, INC.
POMPANO BEACH, FLORIDA

WARNING TRUSSES REQUIRE EXTREME CARE IN FABRICATING, HANDLING, SHIPPING, INSTALLING AND BRACING. REFER TO BCSI 1-03 (BUILDING COMPONENT SAFETY INFORMATION), PUBLISHED BY TPI (TRUSS PLATE INSTITUTE, 583 D'ONOFRIO DR., SUITE 200, MADISON, WI. 53719) AND WTCA (WOOD TRUSS COUNCIL OF AMERICA, 6300 ENTERPRISE LN, MADISON, WI 53719) FOR SAFETY PRACTICES PRIOR TO PERFORMING THESE FUNCTIONS. UNLESS OTHERWISE INDICATED, TOP CHORD SHALL HAVE PROPERLY ATTACHED STRUCTURAL PANELS AND BOTTOM CHORD SHALL HAVE A PROPERLY ATTACHED RIGID CEILING.

IMPORTANT FURNISH COPY OF THIS DESIGN TO INSTALLATION CONTRACTOR. ALPINE ENGINEERED PRODUCTS, INC., SHALL NOT BE RESPONSIBLE FOR ANY DEVIATION FROM THIS DESIGN; ANY FAILURE TO BUILD THE TRUSS IN CONFORMANCE WITH TPI; OR FABRICATING, HANDLING, SHIPPING, INSTALLING & BRACING OF TRUSSES. DESIGN CONFORMS WITH APPLICABLE PROVISIONS OF NDS (NATIONAL DESIGN SPEC. BY AF&PA) AND TPI. ALPINE CONNECTOR PLATES ARE MADE OF 20/18/16GA (W,H/S/K) ASTM A653 GRADE 40/60 (W,K/H,S) GALV. STEEL. APPLY PLATES TO EACH FACE OF TRUSS AND, UNLESS OTHERWISE LOCATED ON THIS DESIGN, POSITION PER DRAWINGS 160A-Z. ANY INSPECTION OF PLATES FOLLOWED BY (I) SHALL BE PER ANNEX A3 OF TPI 1-2002 SEC. 3. A SEAL ON THIS DRAWING INDICATES ACCEPTANCE OF PROFESSIONAL ENGINEERING RESPONSIBILITY SOLELY FOR THE TRUSS COMPONENT DESIGN SHOWN. THE SUITABILITY AND USE OF THIS COMPONENT FOR ANY BUILDING IS THE RESPONSIBILITY OF THE BUILDING DESIGNER, PER ANSI/TPI 1 SEC. 2.

MAX TOT. LD. 60 PSF
DUR. FAC. ANY
MAX SPACING 24.0"

REF	LET-IN VERT
DATE	01/16/04
DRWG	GBLLETIN1103
-ENG	DLJ/KAR

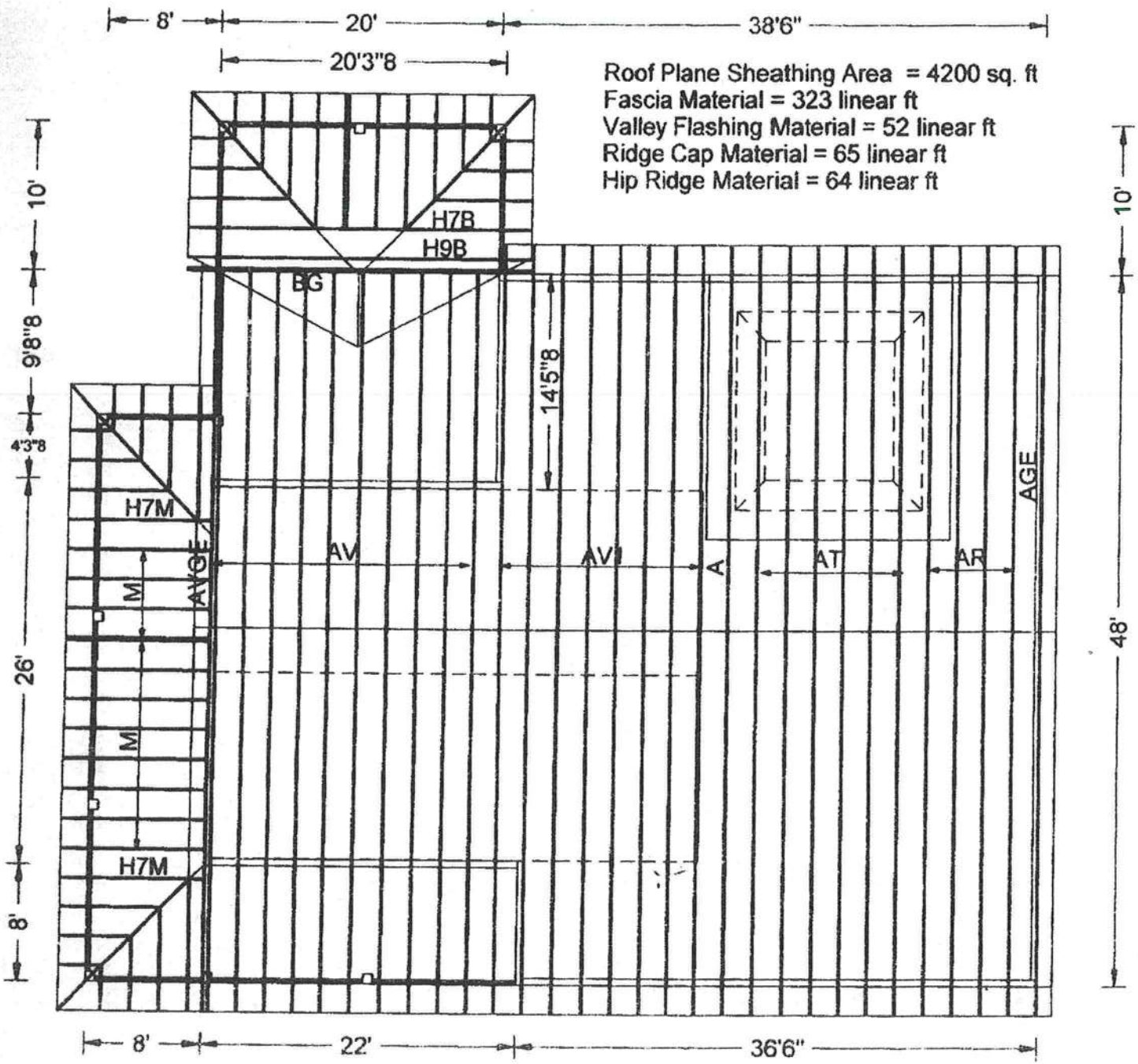

ED & KIM CARTER

JOB LOCATION:

JOB DESCRIPTION: ED & KIM CARTER

DESIGNED BY:

JOB NO: 5-286

PAGE NO: 1 OF 1

CAPITOL WINDOWS AND DOORS

- Series 3540 Single Hung and Fixed Windows
- Series 8540 Single Hung and Fixed Windows

NOTE: SEE INDIVIDUAL TEST REPORT(S) FOR DP RATINGS AND MAXIMUM ALLOWABLE SIZES.

INSTALLATION INSTRUCTIONS FOR "APPROVED FOR FLORIDA" VINYL FIN WINDOWS

1. Storage: Do not lay windows flat, lean multiple units against poles, or store in the sun before installing.

2. Handle units one at a time in the closed and locked position. Place a continuous bead of adhesive caulk such as silicone or urethane on the back side of "nail fins" (mounting flanges) before placing in opening.

3. Place shims under corners of sill. In the closed and locked position, set unit into opening and make sure that there is 3/16" ± 1/16" clearance around the frame. Starting at the center of the longest frame member, place #8 sheet metal or wood screws (with a minimum of 1" penetration into the framing) in every other pre-punched slot which are on 4" to 5" centers (max. spacing 10"). Make sure that screws are driven in straight in order to avoid twisting or bowing. Make sure that the head and sill are straight and level and the jambs are straight and plumb. Check operation of unit frequently as fasteners are set.

4. **Note: Adherence to the above screw spacing and caulk requirements will allow this product to be used for design pressures (DP's) up to and including ± 47.2**

5. Caulk entire perimeter of the fin to mounting surface joint. Also caulk over screw heads and unused slots. Note: This step can be eliminated if 4" wide adhesive type flashing is used (sill 1st., jambs 2nd., head 3rd.)

6. Fill voids between window frame and construction with loose batten type insulation or non-expanding aerosol foam specifically formulated for windows. The use of expanding aerosol type insulating foam, which can bow the frame, voids all stated warranties. The use of muriatic acid for brick clean-up may damage the coil spring sash balance system. Windows must be masked off to avoid muriatic acid exposure, which will void the warranty.

7. Remove plaster, mortar, paint and any other debris that may have collected on the unit and make sure that sash/vent tracks are also clean. Do not use abrasives, solvents, ammonia, vinegar, alkaline, or acid solutions for clean-up, especially with insulated glass units as their use could cause chemical breakdown of the glass seal. Take care not to scratch glass; scratches severely weaken glass and it could eventually break from thermal expansion and contraction. Clean units with water and mild detergent.

8. For structures finished in brick or stone, allow ¼" gap under the sill, then caulk this joint when complete. Also caulk the head and jamb joints in the same manner.

9. If one or more holes are field drilled (by others) in any area of the window sill for any purpose (such as security systems), the warranty will be void. Adding holes can cause water leaks and interior damage.

- CAUTION -

Capitol Windows & Doors or its representatives are unable to control and cannot assume responsibility for the selection and placement of their products in a building or structure in a manner required by laws, statutes, and/or building codes. The purchaser is solely responsible for knowledge of and adherence to the same. BetterBilt window products are not provided with safety glazing unless specifically ordered with such. Many laws and codes require safety glazing (tempered glass) near doors, bathtubs, and shower enclosures. Also be aware of other code requirements such as emergency egress, structural performance, and energy performance.

Headquarters: M.I. Home Products 650 West Market St. Gratz, PA 17030 (717) 365-3300 www.mihp.com

NE 2 21

JUNE 26, 2003

Architectural Testing

ANSI/AAMA/NWWDA 101/I.S.2-97
TEST REPORT

Rendered to:

MI WINDOWS AND DOORS, INC.

SERIES/MODEL: 3540
PRODUCT TYPE: PVC Triple Single Hung

Title	Summary of Results
Rating	H-R30* 108 x 74
Operating Force	17 lbf max.
Air Infiltration	0.11 cfm/ft^2
Water Resistance Test Pressure	4.50 psf
Uniform Load Deflection Test Pressure	±47.2 psf
Uniform Load Structural Test Pressure	+52.5 psf, -70.8 psf
Forced Entry Resistance	Grade 10

Reference should be made to ATI Report No. 50172.01-122-47 for complete test specimen description and data.

130 Derry Court
York, PA 17402-9405
phone: 717-764-7700
fax: 717-764-4129
www.archtest.com

Architectural Testing

ANSI/AAMA/NWWDA 101/I.S.2-97 TEST REPORT

Rendered to:

MI WINDOWS AND DOORS, INC.
P.O. Box 370
Gratz, Pennsylvania 17030-0370

Report No.:	50172.01-122-47
Revision 1:	08/30/04
Test Dates:	06/11/04
Through:	07/07/04
Report Date:	07/27/04
Expiration Date:	07/07/08

Project Summary: Architectural Testing, Inc. (ATI) was contracted by MI Windows and Doors, Inc. to witness testing on a Series/Model 3540, triple single hung window at MI Windows and Doors, Inc. test facility in Elizabethville, Pennsylvania. The sample tested successfully met the performance requirements for a H-R30* 108 x 74 rating. Reference should be made to Report No. 01-45617.02 for Gateway Performance results. Test specimen description and results are reported herein.

General Note: *An asterisk (*) next to the performance grade indicates that the size tested for optional performance was smaller than the Gateway test size for the product type and class.*

Test Specification: The test specimen was evaluated in accordance with ANSI/AAMA/NWWDA 101/I.S.2-97, *Voluntary Specifications for Aluminum, Vinyl (PVC) and Wood Windows and Glass Doors.*

Test Specimen Description:

Series/Model: 3540

Product Type: PVC Triple Single Hung

Overall Size: 8' 11-5/8" wide by 6' 1-3/4" high

Interior Sash Size (3): 2' 9-3/4" wide by 3' 0-1/8" high

Fixed Daylight Opening Size (3): 2' 7-3/4" wide by 2' 9-3/16" high

Screen Size: 2' 9" wide by 2' 11-1/4" high

Overall Area: 55.1 ft^2

130 Derry Court
York, PA 17402-9405
phone: 717-764-7700
fax: 717-764-4129
www.archtest.com

Test Specimen Description: (Continued)

Finish: All PVC was white.

Glazing Details: All glazing consisted of 7/8" thick sealed insulating glass units that were comprised of two sheets of 3/32" thick clear annealed glass and a metal reinforced butyl spacer system. The glass was interior glazed against a double-sided adhesive glazing tape and secured with vinyl glazing beads.

Weatherstripping:

Description	Quantity	Location
0.187" backed by 0.250" high polypile	1 Row	Meeting rail, stiles
0.187" backed by 0.250" high polypile	1 Row	Sill leg
0.187" backed by 0.310" high polypile	1 Row	Stiles
0.187" backed, 1/4 foam filled single leaf vinyl bulb gasket	1 Row	Bottom rail
0.187" backed, 1/8 foam filled vinyl bulb gasket	1 Row	Fixed meeting rail

Frame Construction: The frame was constructed of extruded PVC members. Corners were mitered and welded. End caps were utilized on the ends of the meeting rail and secured with three #6 by 5/8" screws per cap. The fixed meeting rail was then secured to the frame utilizing three #6 by 5/8" screws.

Sash Construction: The sash was constructed of extruded PVC members. Corners were mitered and welded.

Screen Construction: The screen was constructed of roll-formed aluminum. Corners were square-cut and secured with vinyl corner keys. The mesh was secured with a flexible vinyl spline.

Test Specimen Description: (Continued)

Hardware:

Description	Quantity	Location
Constant force balances	6	One per jamb
Metal cam locks with adjacent keepers	6	Meeting rail, 7" from each end
Plastic tilt latches	6	Each end of the interior meeting rail
Metal pivot pins	6	Each end of the bottom rail

Drainage:

Description	Quantity	Location
3/32" by 1/2" weepslot	12	Bottom rail, 2 at each end
1/8" by 1" weepslot	2	Sill, 3" from each end
3/16" by 1/2" weepslot	2	Screen track, 2-1/2" from each end

Reinforcement: The interior meeting rail and bottom rail utilized a roll-formed "I beam" steel reinforcement (Drawing #GVL-451-020). The fixed meeting rail utilized a steel reinforcement (Drawing #RF-104S-020). The intermediate frame rails utilized a steel reinforcement (Drawing #2.75x.125 steel plate).

Installation: The unit was installed into a wood test buck. The nail fin was set against a silicone bedding and fastened to the buck with #6 by 1-5/8" screws, 2" from corners and 8" on center. 3/4" washers were utilized along the entire length of the sill, at midspan of the head and jambs, and at all corners.

Test Results: The results are tabulated as follows:

Paragraph	Title of Test - Test Method	Results	Allowed
2.2.6.1.1	Operating Force	17 lbf	30 lbf max.
2.1.2	Air Infiltration per ASTM E 283 1.57 psf (25 mph)	0.11 cfm/ft^2	0.3 cfm/ft^2 max.

***Note #1**: The tested specimen meets (or exceeds) the performance levels specified in ANSI/AAMA/NWWDA 101/I.S.2-97 for air infiltration.*

Test Results: (Continued)

Paragraph	Title of Test - Test Method	Results	Allowed
2.1.3	Water Resistance per ASTM E 547 (with and without screen)		See Note #2

Note #2: *The client opted to start at a pressure higher than the minimum required. Those results are listed under "Optional Performance".*

2.1.4.1	Uniform Load Deflection per ASTM E 330		
	(Deflections reported were taken on the mullion)		
	(Loads were held for 52 seconds)		
	35.0 psf (positive)	0.39"	See Note #3
	35.0 psf (negative)	0.54"	See Note #3

Note #3: *The Uniform Load Deflection test is not a requirement of ANSI/AAMA/NWWDA 101/I.S.2-97 for this product designation. The deflection data is recorded in this report for special code compliance and information only.*

2.1.4.2	Uniform Load Structural per ASTM E 330		
	(Permanent sets reported were taken on the mullion)		
	(Loads were held for 10 seconds)		
	52.5 psf (positive)	<0.01"	0.27" max.
	52.5 psf (negative)	0.07"	0.27" max.
2.2.6.1.2	Deglazing Test per ASTM E 987		
	In operating direction - 70 lbs		
	Interior meeting rail	0.13"/26%	0.50"/100%
	Bottom rail	0.11"/22%	0.50"/100%
	In remaining direction - 50 lbs		
	Left stile	0.09"/18%	0.50"/100%
	Right stile	0.10"/20%	0.50"/100%
2.1.7	Welded Corner Test	Meets as stated	Meets as stated

Test Results: (Continued)

Paragraph	Title of Test - Test Method	Results	Allowed
2.1.8	Forced Entry Resistance per ASTM F 588		
	Type: A	Grade: 10	
	Lock Manipulation Test	No entry	No entry
	Test A1	No entry	No entry
	Test A2	No entry	No entry
	Test A3	No entry	No entry
	Test A4	No entry	No entry
	Test A5	No entry	No entry
	Test A7	No entry	No entry
	Lock Manipulation Test	No entry	No entry
Optional Performance			
4.3	Water Resistance per ASTM E 547 (with and without screen) 4.50 psf	No leakage	No leakage
4.4.1	Uniform Load Deflection per ASTM E 330 (Deflections reported were taken on the mullion) (Loads were held for 52 seconds)		
	47.2 psf (positive)	0.73"	See Note #3
	47.2 psf (negative)	0.92"	See Note #3
4.4.2	Uniform Load Structural per ASTM E 330 (Permanent sets reported were taken on the mullion) (Loads were held for 10 seconds)		
	52.5 psf (positive)	<0.01"	0.27" max.
	70.8 psf (negative)	0.21"	0.27" max.

Detailed drawings, representative samples of the test specimen, and a copy of this report will be retained by ATI for a period of four years from the original test date. The above results were secured by using the designated test methods and they indicate compliance with the performance requirements of the above referenced specification. This report does not constitute certification of this product, which may only be granted by the certification program administrator. This report may not be reproduced, except in full, without the approval of Architectural Testing, Inc.

For ARCHITECTURAL TESTING, INC:

Digitally Signed by: Jeramie D. Grabosch

Jeramie D. Grabosch
Technician

Digitally Signed by: Steven M. Urich

Steven. M. Urich, P.E.
Senior Project Engineer

JDG:vlm

COLUMBIA COUNTY BUILDING DEPARTMENT

RESIDENTIAL MINIMUM PLAN REQUIREMENTS AND CHECKLIST FOR FLORIDA BUILDING CODE 2001 ONE (1) AND TWO (2) FAMILY DWELLINGS

ALL REQUIREMENTS ARE SUBJECT TO CHANGE
EFFECTIVE MARCH 1, 2002

ALL BUILDING PLANS MUST INDICATE THE FOLLOWING ITEMS AND INDICATE COMPLIANCE WITH CHAPTER 1606 OF THE FLORIDA BUILDING CODE 2001 BY PROVIDING CALCULATIONS AND DETAILS THAT HAVE THE SEAL AND SIGNATURE OF A CERTIFIED ARCHITECT OR ENGINEER REGISTERED IN THE STATE OF FLORIDA, OR ALTERNATE METHODOLOGIES, APPROVED BY THE STATE OF FLORIDA BUILDING COMMISSION FOR ONE-AND-TWO FAMILY DWELLINGS. FOR DESIGN PURPOSES THE FOLLOWING BASIC WIND SPEED AS PER FIGURE 1606 SHALL BE USED.

WIND SPEED LINE SHALL BE DEFINED AS FOLLOWS: THE CENTERLINE OF INTERSTATE 75.

1. ALL BUILDINGS CONSTRUCTED EAST OF SAID LINE SHALL BE -------- 100 MPH
2. ALL BUILDINGS CONSTRUCTED WEST OF SAID LINE SHALL BE --------110 MPH
3. NO AREA IN COLUMBIA COUNTY IS IN A WIND BORNE DEBRIS REGION

APPLICANT – PLEASE CHECK ALL APPLICABLE BOXES BEFORE SUBMITTAL

GENERAL REQUIREMENTS; Two (2) complete sets of plans containing the following:

Applicant	Plans Examiner	
☐	☑	All drawings must be clear, concise and drawn to scale ("Optional " details that are not used shall be marked void or crossed off). Square footage of different areas shall be shown on plans.
☐	☑	Designers name and signature on document (FBC 104.2.1). If licensed architect or engineer, official seal shall be affixed.
☐	☑	**Site Plan including:** a) Dimensions of lot b) Dimensions of building set backs c) Location of all other buildings on lot, well and septic tank if applicable, and all utility easements. d) Provide a full legal description of property.
☐	☑	**Wind-load Engineering Summary, calculations and any details required** a) Plans or specifications must state compliance with FBC Section 1606 b) The following information must be shown as per section 1606.1.7 FBC a. Basic wind speed (MPH) b. Wind importance factor (I) and building category c. Wind exposure – if more than one wind exposure is used, the wind exposure and applicable wind direction shall be indicated d. The applicable internal pressure coefficient e. Components and Cladding. The design wind pressure in terms of psf (kN/m²), to be used for the design of exterior component and cladding materials not specifically designed by the registered design professional
☐	☑	**Elevations including:**
☐	☑	a) All sides
☐	☑	b) Roof pitch
☐	☑	c) Overhang dimensions and detail with attic ventilation
☐	☑	d) Location, size and height above roof of chimneys
☐	☑	e) Location and size of skylights
☐	☑	f) Building height
☐	☑	e) Number of stories

Floor Plan including:

- ☐ ☐ a) Rooms labeled and dimensioned
- ☐ ☐ b) Shear walls
- ☐ ☑ c) Windows and doors (including garage doors) showing size, mfg., approval listing and attachment specs. (FBC 1707) and safety glazing where needed (egress windows in bedrooms to be shown)
- ☐ ☑ d) Fireplaces (gas appliance) (vented or non-vented) or wood burning with hearth
- ☐ ☑ e) Stairs with dimensions (width, tread and riser) and details of guardrails and handrails
- ☐ ☑ f) Must show and identify accessibility requirements (accessible bathroom)

Foundation Plan including:

- ☐ ☐ a) Location of all load-bearing wall with required footings indicated as standard Or monolithic and dimensions and reinforcing
- ☐ ☑ b) All posts and/or column footing including size and reinforcing
- ☐ ☑ c) Any special support required by soil analysis such as piling
- ☐ ☑ d) Location of any vertical steel

Roof System:

- ☐ ☑ a) Truss package including:
  1. Truss layout and truss details signed and sealed by Fl. Pro. Eng.
  2. Roof assembly (FBC 104.2.1 Roofing system, materials, manufacturer, fastening requirements and product evaluation with wind resistance rating)
- ☐ ☑ b) Conventional Framing Layout including:
  1. Rafter size, species and spacing
  2. Attachment to wall and uplift
  3. Ridge beam sized and valley framing and support details
  4. Roof assembly (FBC 104.2.1 Roofing systems, materials, manufacturer, fastening requirements and product evaluation with wind resistance rating)

Wall Sections including:

- ☐ ☐ a) Masonry wall
  1. All materials making up wall
  2. Block size and mortar type with size and spacing of reinforcement
  3. Lintel, tie-beam sizes and reinforcement
  4. Gable ends with rake beams showing reinforcement or gable truss and wall bracing details
  5. All required connectors with uplift rating and required number and size of fasteners for continuous tie from roof to foundation
  6. Roof assembly shown here or on roof system detail (FBC 104.2.1 Roofing system, materials, manufacturer, fastening requirements and product evaluation with resistance rating)
  7. Fire resistant construction (if required)
  8. Fireproofing requirements
  9. Shoe type of termite treatment (termicide or alternative method)
  10. Slab on grade
      a. Vapor retardant (6mil. Polyethylene with joints lapped 6 inches and sealed)
      b. Must show control joints, synthetic fiber reinforcement or Welded fire fabric reinforcement and supports
  11. Indicate where pressure treated wood will be placed
  12. Provide insulation R value for the following:
      a. Attic space
      b. Exterior wall cavity
      c. Crawl space (if applicable)

☐ ☑ **b) Wood frame wall**

1. All materials making up wall
2. Size and species of studs
3. Sheathing size, type and nailing schedule
4. Headers sized
5. Gable end showing balloon framing detail or gable truss and wall hinge bracing detail
6. All required fasteners for continuous tie from roof to foundation (truss anchors, straps, anchor bolts and washers)
7. Roof assembly shown here or on roof system detail (FBC104.2.1 Roofing system, materials, manufacturer, fastening requirements and product evaluation with wind resistance rating)
8. Fire resistant construction (if applicable)
9. Fireproofing requirements
10. Show type of termite treatment (termicide or alternative method)
11. Slab on grade
    a. Vapor retardant (6Mil. Polyethylene with joints lapped 6 inches and sealed
    b. Must show control joints, synthetic fiber reinforcement or welded wire fabric reinforcement and supports
12. Indicate where pressure treated wood will be placed
13. Provide insulation R value for the following:
    a. Attic space
    b. Exterior wall cavity
    c. Crawl space (if applicable)

☐ ☐ c) Metal frame wall and roof (designed, signed and sealed by Florida Prof. Engineer or Architect)

Floor Framing System:

☐ ☐ a) Floor truss package including layout and details, signed and sealed by Florida Registered Professional Engineer

☐ ☐ b) Floor joist size and spacing

☐ ☐ c) Girder size and spacing

☐ ☐ d) Attachment of joist to girder

☐ ☐ e) Wind load requirements where applicable

☐ ☐ **Plumbing Fixture layout**

Electrical layout including:

☐ ☑ a) Switches, outlets/receptacles, lighting and all required GFCI outlets identified

☐ ☐ b) Ceiling fans

☐ ☐ c) Smoke detectors

☐ ☐ d) Service panel and sub-panel size and location(s)

☐ ☐ e) Meter location with type of service entrance (overhead or underground)

☐ ☐ f) Appliances and HVAC equipment

☐ ☐ g) Arc Fault Circuits (AFCI) in bedrooms

HVAC information

☐ ☐ a) Manual J sizing equipment or equivalent computation

☐ ☐ b) Exhaust fans in bathroom

☐ ☐ **Energy Calculations** (dimensions shall match plans)

☐ ☐ **Gas System** Type (LP or Natural) Location and BTU demand of equipment

☐ ☐ **Disclosure Statement for Owner Builders**

☐ ☐ ***Notice Of Commencement Required Before Any Inspections Will Be Done**

☐ ☐ **Private Potable Water**

a) Size of pump motor

b) Size of pressure tank

c) Cycle stop valve if used

THE FOLLOWING ITEMS MUST BE SUBMITTED WITH BUILDING PLANS

1. **Building Permit Application:** A current Building Permit Application form is to be completed and submitted for all residential projects.

2. **Parcel Number:** The parcel number (Tax ID number) from the Property Appraiser (386) 758-1084 is required. A copy of property deed is also requested.

3. **Environmental Health Permit or Sewer Tap Approval:** A copy of the Environmental Health permit, existing septic approval or sewer tap approval is required before a building permit can be issued.
   (386) 758-1058 **(Toilet facilities shall be provided for construction workers)**

4. **City Approval:** If the project is to be located within the city limits of the Town of Fort White, prior approval is required. The Town of Fort White approval letter is required to be submitted by the owner or contractor to this office when applying for a Building Permit. (386) 497-2321

5. **Flood Information:** All projects within the Floodway of the Suwannee or Santa Fe Rivers shall require permitting through the Suwannee River Water Management District, before submitting application to this office. Any project located within a flood zone where the base flood elevation (100 year flood) has been established shall meet the requirements of Section 8.8 of the Columbia County Land Development Regulations. Any project located within a flood zone where the base flood elevation has not been established (Zone A) shall meet the requirements of Section 8.7 of the Columbia County Land Development Regulations. **CERTIFIED FINISHED FLOOR ELEVATIONS WILL BE REQUIRED ON ANY PROJECT WHERE THE BASE FLOOD ELEVATION (100 YEAR FLOOD) HAS BEEN ESTABLISHED.**
   A development permit will also be required. Development permit cost is **$50.00**

6. **Driveway Connection:** If the property does not have an existing access to a public road, then an application for a culvert permit (**$25.00**) must be made. If the applicant feels that a culvert is not needed, they may apply for a culvert waiver (**$50.00**). All culvert waivers are sent to the Columbia County Public Works Department for approval or denial.

7. **911 Address:** If the project is located in an area where the 911 address has been issued, then the proper paperwork from the 911 Addressing Department must be submitted. (386) 752-8787

ALL REQUIRED INFORMATION IS TO BE SUBMITTED FOR REVIEW. YOU WILL BE NOTIFIED WHEN YOUR APPLICATION AND PLANS ARE APPROVED AND READY TO PERMIT. PLEASE DO NOT EXPECT OR REQUEST THAT PERMIT APPLICATIONS BE REVIEWED OR APPROVED WHILE YOU ARE HERE – TIME WILL NOT ALLOW THIS –PLEASE DO NOT ASK

NOTICE:

ADDRESSES BY APPOINTMENT ONLY!

TO OBTAIN A 9-1-1 ADDRESS THE REQUESTER MUST CONTACT THE COLUMBIA COUNTY 9-1-1 ADDRESSING DEPARTMENT AT (386) 752-8787 FOR AN APPOINTMENT TIME AND DATE:

YOU CAN NOT OBTAIN A NEW ADDRESS OVER THE TELEPHONE. MUST MAKE AN APPOINTMENT!

THE ADDRESSING DEPARTMENT IS LOCATED AT 263 NW LAKE CITY AVENUE (OFF OF WEST U.S. HIGHWAY 90 WEST OF INTERSTATE 75 AT THE COLUMBIA COUNTY EMERGENCY OPERATIONS CENTER).

THE REQUESTER WILL NEED THE FOLLOWING:

1. THE PARCEL OR TAX ID NUMBER (SAMPLE: "25-4S-17-12345-123" OR "R12345-123) FOR THE PROPERTY.
2. A PLAT, PLAN, SITE PLAN, OR DRAWING SHOWING THE PROPERTY LINES OF THE PARCEL.
   a. LOCATION OF PLANNED RESIDENT OR BUSINESS STRUCTURE ON THE PROPERTY WITH DISTANCES FROM TWO OF THE PROPERTY LINES TO THE STRUCTURE (SEE SAMPLE BELOW).
   b. LOCATION OF THE ACCESS POINT (DRIVEWAY, ETC.) ON THE ROADWAY FROM WHICH LOCATION IS TO BE ADDRESSED WITH A DISTANCE FROM A PARALLEL PROPERTY LINE AND OR PROPERTY CORNER (SEE SAMPLE BELOW).
   c. TRAVEL OF THE DRIVEWAY FROM THE ACCESS POINT TO THE STRUCTURE (SEE SAMPLE BELOW).

SAMPLE:

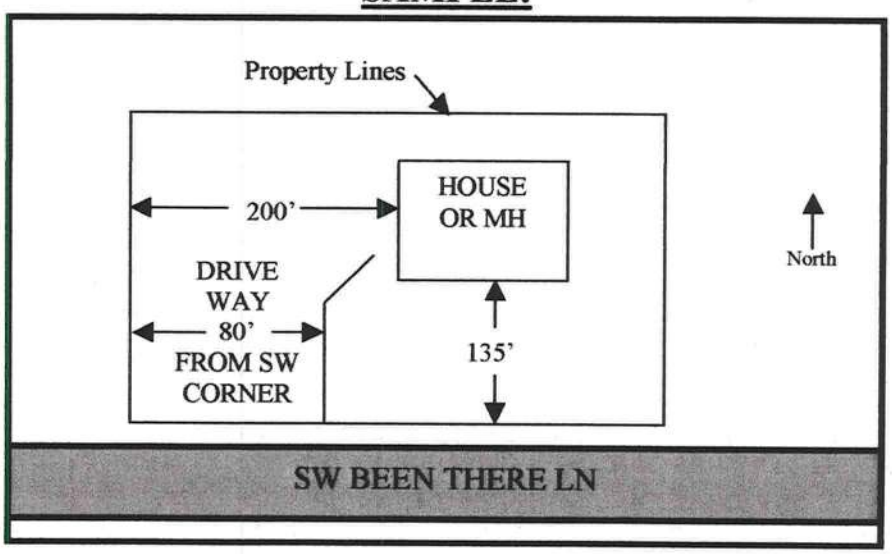

NOTE: 5 TO 7 WORKING DAYS MAY BE REQUIRED IF ADDRESSING DEPARTMENT NEEDS TO CONDUCT AN ON SITE SURVEY.

-39

Ed + Kim Carter

MILLENNIUM METALS, INC.

1333 Haines Street
Jacksonville, Fl. 32202
904 358 8366 – fax 904 358 8285
888 358 7663

Calculations for attachments for RIB Panels 29ga and 26ga

Greatest mean height 30' Exposure B
Pitches 3/12 to 12/12

All raw material used m ed the
ASTM that is require ble
1507.5.3 ar

1-877-358-7663
Becky

Roofing Covering Type	Rate
Galvanized Steel	coated
Prepainted Steel	
Aluminum Zinc Alloy C	
Painted Aluminum Zinc	
Copper	
Aluminum	

1505.3 Class B roof gles
meeting the criteria s o meet
C

Alachua Farm
Robbie

Florida Pr on #6519

Millennium Metals, Inc.
1333 Haines Street
Jacksonville, Fl. 32202
904 358 8366 – fax 904 358 8285
888 358 7663

RIB Panels

Greatest mean height 30' exposure B - pitches 3/12 to 12/12

				Wind Speed			
Zone	Type of Fastener	Attachment Material	Fastener Size	100 mph	110 mph	120 mph	140 mph
Zone 1 thru Zone 3	Wood Screws	Existing 1/2" plywood/osb deck with battens (optional) **		On Center Spacing	On Center Spacing	On Center Spacing	On Center Spacing
			#9 x 1-1/2"	16" OC	16" OC	16" OC	16" OC
		5/8" plywood / osb battens optional **	#9 x 1-1/2"	16" OC	16" OC	16" OC	16" OC
		2x4 Rafters @2' OC with Battens (see note)	#9 x 3"	24" OC	24" OC	24" OC	24" OC
	Metal Screw	12ga through 18ga	#12 x 1"	16" OC	16" OC	16" OC	16" OC
		20ga through 26ga	#14 x 7/8"	16" OC	16" OC	16" OC	*** See note

Typical attachment is 9" on center except as noted

Zone 3 attachment as indicated in section 1606.2.3 will vary in width but in no case be less than 3 foot see page 9

*** Note: Double screws @ 9" on center with rows of 16" per detail C

** Batten 1x4 attached over ½" plywood/OSB 16" on center with a #8 x 3" screw 8" on center.

Note: 2x2 open rafter attachment of battens are the responsibility of the engineer of the truss section / builder. Millennium Metals makes no recommendation other than panel attachment through 1 x 4 batten.

Re-roofing over shingles with or without battens is acceptable providing there is no more than one layer of shingles present. Separation sheet is required of 15# felt if batten system is not used.

Millennium Metals, Inc.
1333 Haines Street
Jacksonville, Fl. 32202
904 358 8366 – fax 904 358 8285
888 358 7663

RIB Panels

Uplift attachments –

Zone 1
Wood screws into ½" timber
Uplift = 152# per inch x ½= 76# x 1.6= 121#
Table 1606.28
100 mph = 18.0# per square foot
Zone 2
100 mph = -34.8# per square foot
Zone 3
100 mph = -45.4# per square foot
121# ÷ 45.4 per square foot = 2.66 square foot
Screws @ 9" on center 2.66 square foot ÷ .75' = 3.55 foot >1.33 foot
Note – Use 9" on center with rows at 16" on center maximum

5/8" Plywood
Pull out = 152# ÷ 11 x .625" = 95# x 1.6 = 152#/screw
Zone 3 – 152# ÷ 45.4# per square foot = 3.34 square foot ÷ .75 = 4.46 foot >1.33 foot maximum

---

1 x 4 Battens: @ 24" on center
Pull out = 152# per inch x 1.5"=228#x1.6=364
Maximum pullout = .75'x2'x45.4# per square foot=68.1#<36.4# capacity

---

Screws into metal
#12 thru 18 gauge – ult=487÷3=162#x1.3=210#
#14 thru 20 gauge – ult=346÷3=115x1.3=149#
Maximum pullout = .75'x1.33'x 45.4#/sq.'=45.#<149#

Millennium Metals, Inc.
1333 Haines Street
Jacksonville, Fl. 32202
904 358 8366 – fax 904 358 8285
888 358 7663

RIB PANEL

110 MPH
Zone 1 = -21.8# per square foot
Zone 2 = -42.1# per square foot
Zone 3 = -55.0# per square foot

Wood screws into ½" timber deck – pullout capacity = 121#
9" x 16" = 1 square foot = -55# <121
**Battens optional

Wood screws into 5/8" timber deck = pullout capacity = 152#
9" x 16" = 1 square foot x – -55 = 55#<152
**Battens optional

1x4 Batten @ 24" on center = pullout capacity = 364#
9" x 24" = 1.5 square foot x – -55# per square foot = -82.5#<364
Above indicates pull out values from 1 x 4 battens not engineering of battens to truss.

Screws into Metal Deck
#12 – 18 gauge = capacity = 210#
#14 – 20 gauge = capacity = 149#
Maximum pullout = .75 x 1.33 x –55# per square foot = -55#<149#
Above indicates pull out values from steel gauge indicated above not engineering of batten to truss.

FLORIDA BUILDING CODE - BUILDING
1606.2.5 Components and cladding. Pressure for wind loading actions on components and cladding shall be determined from Table 1606.2B for enclosed portions of the building and Table 1606.2C for over hangs, based on the effective area for the element under consideration. The pressure shall be applied in accordance with the loading diagrams in figure 1606.2C

Millennium Metals, Inc.
1333 Haines Street
Jacksonville, Fl. 32202
904 358 8366 – fax 904 358 8285
888 358 7663

RIB PANEL

120 MPH
Zone 1 = -25.9# per square foot
Zone 2 = -50.1# per square foot
Zone 3 = -65.4# per square foot

Wood Screws into ½" timber – pullout capacity = 121#
9" x 16" = 1 square foot x 65.4# per square foot = 65.4#<121
Attachment C / 16" on center
** Batten optional

Wood Screws into 5/8" Plywood – pullout capacity = 152#
9" x 16" = 1 square foot x 65.4# per square foot = 65.4#<152#
Attachment C / 16" on center
** Batten optional

1x4 Batten at 24" on center
Pullout capacity = 364#
Maximum uplift - .75'x2'x65.4=98.1#
Attachment C / 24" on center
Above indicates pull out values from 1 x 4 battens not engineering of battens to truss.

Screws into Metal Deck
#12 thru 18 gauge = 210#
#14 thru 20 gauge = 61#<149#.

In ***Zone 3*** – Use ***9"x1'0"***= .75 square foot x 65.4# per square foot = 49#<149#

Above indicates pull out values from steel gauge indicated above not engineering of batten to truss.

Millennium Metals, Inc.
1333 Haines Street
Jacksonville, Fl. 32202
904 358 8366 – fax 904 358 8285
888 358 7663

RIB PANEL

140 MPH
Zone 1 = 35.33# per square foot
Zone 2 = 68.1# per square foot
Zone 3 = 89.0# per square foot

Wood Screws into ½" timber – pullout capacity = 121#
9" x 16" = 1 square foot x 89# per square foot = 89#<121#
Attachment C / 16" on center
**Batten optional

Wood Screws into 5/8" Plywood – pullout capacity = 152#
9" x 16" = 1 square foot x 89# per square foot = 89#<152#
Attachment C / 16" on center
**Batten optional

1x4 Batten at 24" on center - pull out capacity = 364#
Uplift = 9" x 24" = 1.5 square foot x 89# per square foot = 133#<364#
Attachment C / 24" on center
Above indicates pull out values from 1 x 4 battens, not engineering of battens to truss.

Screws into Metal Deck
#12 thru 18 gauge = 210#>89#
#14 thru 20 gauge = 149#/ screw
In zone 3 double up on screws on each side of ribs

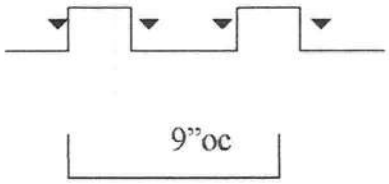

.375 x 1.33'= .5 square feet x 89.0# per square foot = 44.5#/screw<149.0#

Above indicates pull out values from 1 x 4 battens, not engineering of battens to truss.

Millennium Metals, Inc.
1333 Haines Street
Jacksonville, Fl. 32202
904 358 8366 – fax 904 358 8285
888 358 7663

Table 1606.2b - Component and cladding wind loads for a building with a mean roof height of 30 feet located in exposure B (psf)

Zone[3]	Effective wind area	85		90		100		110		120		130		140		150	
Roof Angle > 0-10 degree																	
1	10.0	10.0	-13	10.0	-14.6	10.0	-18.0	10.0	-21.8	10.5	-25.9	12.4	-30.4	14.3	-35.3	16.5	-40.5
1	20.0	10.0	-12.7	10.0	-14.2	10.0	-17.5	10.0	-21.2	10.0	-25.2	11.6	-29.6	13.4	-34.4	15.4	-39.4
1	50.0	10.0	-12.2	10.0	-13.7	10.0	-16.9	10.0	-20.5	10.0	-24.4	10.6	-28.6	12.3	-332.0	14.1	-38.1
1	100.0	10.0	-11.9	10.0	-13.3	10.0	-16.5	10.0	-19.9	10.0	-29.7	10.0	-27.8	11.4	-32.3	19.0	-37.0
2	10.0	10.0	-21.8	10.0	-24.4	10.0	-30.2	10.0	-36.5	10.5	-43.5	12.4	-51.0	14.9	-59.2	19.5	-67.9
2	20.0	10.0	-19.5	10.0	-21.8	10.0	-27.0	10.0	-32.6	10.0	-36.8	11.6	-45.6	19.4	-52.9	15.4	-60.7
2	50.0	10.0	-16.4	10.0	-18.4	10.0	-22.7	10.0	-27.5	10.0	-32.7	10.6	-38.4	12.3	-44.5	14.1	-51.1
2	100.0	10.0	-14.1	10.0	-15.8	10.0	-19.5	10.0	-28.1	10.0	-33	11.4	-38.2	11.4	-38.2	13.0	-43.9
3	10.0	10.0	-32.8	10.0	-36.8	10.0	-45.4	10.0	-55	10.5	-65.4	12.4	-76.8	14.3	-89.0	16.5	-102.2
3	20.0	10.0	-27.2	10.0	-30.25	10.0	-37.6	10.0	-45.5	10.0	-54.2	11.6	-63.6	13.4	-73.8	15.4	-84.7
3	50.0	10.0	-19.7	10.0	-22.1	10.0	-27.3	10.0	-33.1	10.0	-39.3	10.6	-46.2	12.3	-53.5	14.1	-61.5
3	100.0	10.0	-14.1	10.0	-15.8	10.0	-19.5	10.0	-23.6	10.0	-28.1	10.0	-33.0	11.4	-38.2	13.0	-43.9
Roof Angle > 10-30 degree																	
1	10.0	10.0	-11.9	10.0	-13.3	10.4	-16.5	12.5	-19.9	14.9	-23.7	17.5	-27.8	20.3	-32.3	23.3	-37.0
1	20.0	10.0	-11.6	10.0	-13	10.0	-16	11.4	-19.4	13.6	-23	16.0	-27.0	18.5	-31.4	21.3	-36.0
1	50.0	10.0	-11.1	10.0	-12.5	10.0	-15.4	10.0	-18.6	11.9	-22.2	13.9	-26.0	16.1	-30.2	18.5	-34.6
1	100.0	10.0	-10.8	10.0	-12.1	10.0	-14.9	10.0	-18.1	10.5	-21.5	12.4	-25.2	14.3	-29.3	16.5	-33.6
2	10.0	10.0	-25.1	10.0	-28.2	10.4	-34.8	12.5	-42.1	14.9	-50.1	17.5	-58.7	20.3	-68.1	23.3	-78.2
2	20.0	10.0	-22.8	10.0	-25.6	10.0	-31.5	11.4	-38.2	13.6	-45.4	16.0	-53.3	18.5	-61.8	21.3	-71.0
2	50.0	10.0	-19.7	10.0	-22.1	10.0	-27.3	10.0	-33	11.9	-39.88	13.9	-46.1	16.1	-53.5	18.5	-61.4
2	100.0	10.0	-17.4	10.0	-19.5	10.0	-21.1	10.0	-29.1	10.5	-34.7	12.4	-40.7	14.3	-47.2	16.5	-54.2
3	10.0	10.0	-25.1	10.0	-28.2	10.4	-34.5	12.5	-42.1	14.9	-50.1	17.5	-58.7	20.3	-68.1	23.3	-78.2
3	20.0	10.0	-22.8	10.0	-25.6	10.0	-31.5	11.4	-38.2	13.6	-45.4	16.0	-53.3	18.5	-61.8	21.3	-71.0
3	50.0	10.0	-19.7	10.0	-22.1	10.0	-27.3	10.0	-33	11.9	-39.3	13.9	-46.1	16.1	-53.5	18.5	-61.4
3	100.0	10.0	-17.4	10.0	-19.5	10.0	-24.1	10.0	-29.1	10.5	-34.7	12.4	-40.7	14.9	-47.2	18.5	-54.2
Roof Angle > 30-45 degree																	
1	10.0	11.9	-13.0	13.3	-14.6	16.5	-18.0	19.9	-21.8	23.7	-25.9	27.8	-30.4	32.3	-35.3	37.0	-40.5
1	20.0	11.6	-12.3	13.0	-13.6	16.0	-17.1	19.4	-20.7	23.0	-24.6	27.0	-28.9	31.4	-33.5	36.0	-38.4
1	50.0	11.1	-11.5	12.5	-12.8	15.4	-15.9	18.6	-19.2	22.2	-22.8	26.0	-26.6	30.2	-31.1	34.6	-35.7
1	100.0	10.8	-10.8	12.1	-12.1	14.9	-14.9	18.1	-18.1	21.5	-21.5	25.2	-25.2	29.3	-29.3	33.6	-33.6
2	10.0	11.9	-15.2	13.3	-17	16.5	-21.0	19.9	-25.5	23.7	-30.3	27.8	-35.6	32.3	-41.2	37.0	-47.9
2	20.0	11.6	-14.5	13.0	-16.3	16.0	-20.1	19.4	-24.3	23.0	-29.0	27.0	-34.0	31.4	-39.4	36.0	-45.3
2	50.0	11.1	-13.7	12.5	-15.3	15.4	-18.9	18.6	-22.9	22.2	-27.2	26.0	-32.0	30.2	-37.1	34.6	-42.5
2	100.0	10.8	-13.0	12.1	-14.6	14.9	-18.0	18.1	-21.8	21.5	-25.9	25.2	-30.4	29.3	-35.3	38.6	-40.6
3	10.0	11.9	-15.2	13.3	-17	16.5	-21.0	19.9	-25.5	23.7	-30.3	27.8	-35.6	32.3	-41.2	37.0	-47.3
3	20.0	11.6	-14.5	13.0	-16.3	16.0	-20.1	19.4	-24.3	23.0	-29.0	27.0	-34.0	31.4	-39.4	36.0	-45.3
3	50.0	11.1	-13.7	12.5	-15.3	15.4	-18.9	18.6	-22.9	22.2	-27.2	26.0	-32.0	30.2	-37.1	34.6	-42.5
3	100.0	10.8	-13.0	12.1	-14.6	14.9	-18.0	18.4	-21.8	21.5	-25.9	25.2	-30.4	29.3	-35.3	33.6	-40.5

Millennium Metals, Inc.
1333 Haines Street
Jacksonville, Fl. 32202
904 358 8366 – fax 904 358 8285
888 358 7663

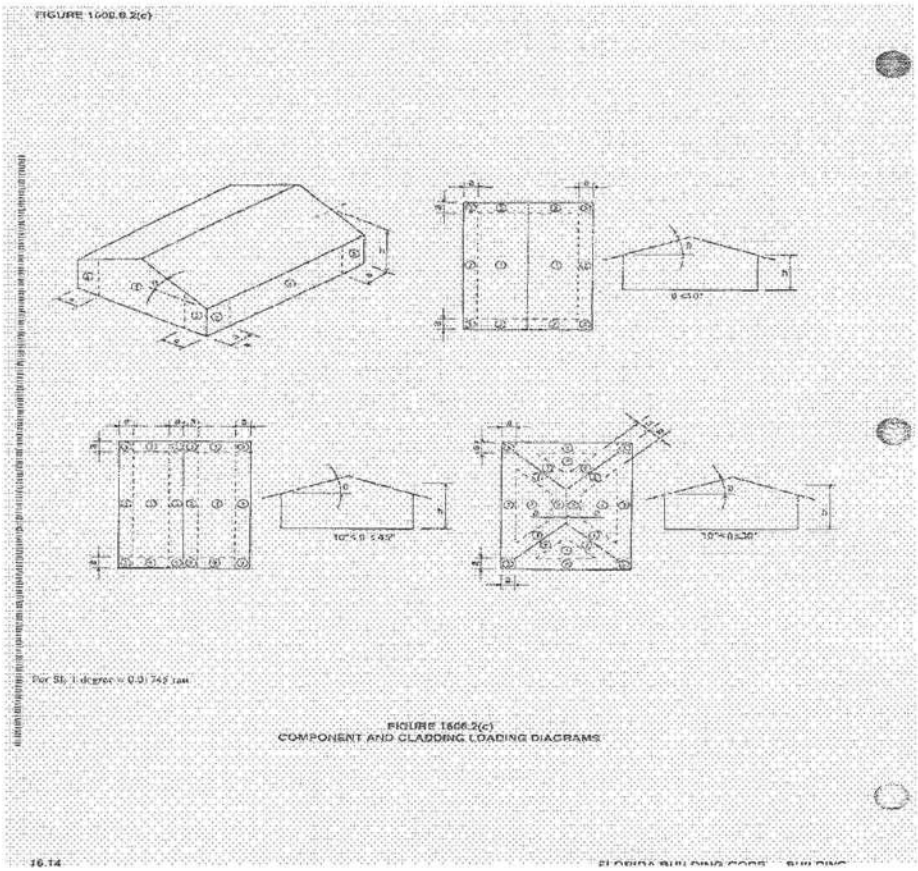

1606.2.3 Edge strips and end zones. The width of the edge strips (a), as shown in figure 1606.2 (c) shall be 10% if the least horizontal dimension of 40% of the eave height, whichever is less but not less than either 4% of the least horizontal dimension of 3 feet (914 mm). End zones as shown in figure 1606.2b shall be twice the width of the edge strip (a).

Millennium Metals, Inc.
1333 Haines Street
Jacksonville, Fl. 32202
904 358 8366 – fax 904 358 8285
888 358 7663

Rib Panel

Ultimate Pullout Values (Pound) Ultimate Shear Values (Pounds)

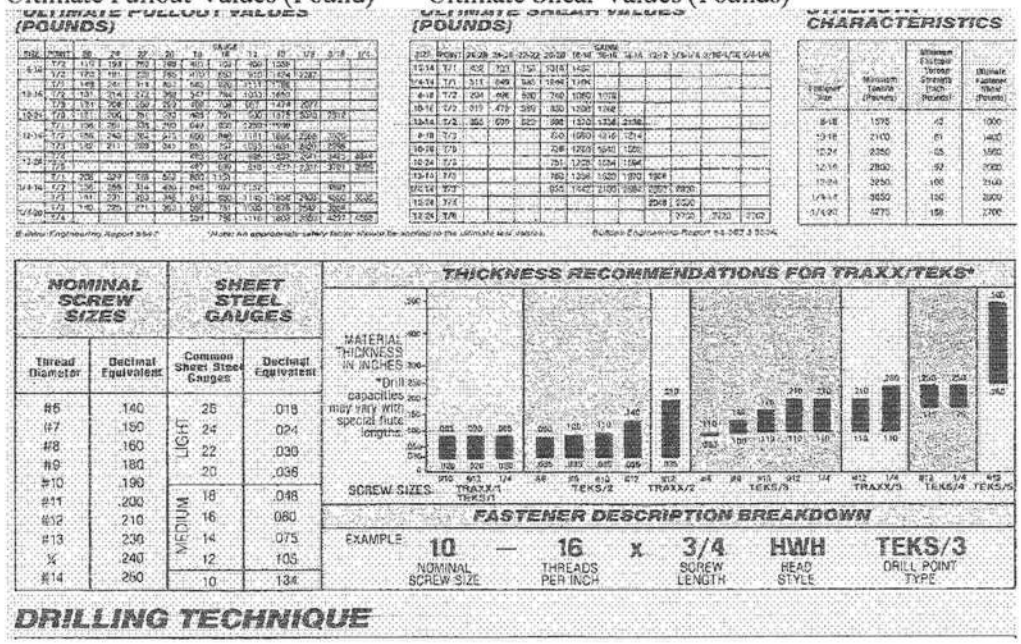

Table 2.3.2 Frequently Used Load Duration Factors		
Load duration	C_D	Typical Design Loads
Permanent	0.9	Dead Load
Ten Years	1.0	Occupancy Live Load
Two months	1.15	Snow Load
Seve days	1.25	Construction Load
Ten minutes	1.6	Wind/Earthquake Load
Impact [2]	2.0	Impact Load

Table 11.2A Cut thread or Rolled Thread Wood Screw Withdraw Design Values (W) [1]

Tabulation withdrawal design values (W) are in pounds per inch of thread pentration into side of main member. Thread length is approximately 2/3 the total wood screw length (see reference 7)

Specific Gravity G	Wood Screw Gage										
	6g	7g	8g	9g	10g	12g	14g	16g	18g	20g	24g
0.73	209	229	249	268	288	327	367	406	446	485	564
0.71	198	216	235	254	272	310	347	384	421	459	533
0.68	181	199	216	233	250	284	318	352	387	421	489
0.67	176	193	209	226	243	276	309	342	375	409	475
0.58	132	144	157	169	182	207	232	256	281	306	356
0.55	119	130	141	152	163	186	208	231	253	275	320
0.51	102	112	121	131	141	160	179	198	217	237	275
0.5	98	107	117	126	135	154	172	191	209	221	264

Application #:	FL3576
Date Submitted:	10/28/2004
Code Version:	2001
Product Manufacturer:	MILLENNIUM METALS INC.
Address/Phone/email:	1333 HAINES STREET EXP JACKSONVILLE, FL 32202 (877) 358-7663
Category:	Roofing
Subcategory:	Non-structural Metal Roofing
Evaluation Method:	Evaluation Report from a Florida Registered Architect or Florida Professional Engineer
Referenced Standards from the Florida Building Code:	**Section** **Standard** **Year** 1507.5 UL 580 1994
Florida Engineer or Architect Name:	James L. Buckner
Florida License:	PE-31242
Quality Assurance Entity:	Underwriters Laboratories Inc.
Validation Entity:	Warren W. Schaefer, P.E.
Authorized Signature:	James Buckner jimmy@cbuckinc.net
Evaluation/Test Reports Uploaded:	PTID_3576_T_1-5VandMillenniumV_24in_26GaSteelOnWood_EVALREPORT.pdf PTID_3576_T_1-MillenniumRib_36in_29GaSteelOnWood_EVALREPORT.pdf PTID_3576_T_CertOfIndep&QA.pdf
Installation Documents Uploaded:	
Product Approval Method:	Method 1 Option D
Application Status:	Approved

Date Validated: 11/19/2004

Date Approved: 12/08/2004

Date Certified to the 2004 Code:

Page: Page 1 / 1

App/Seq #	Product Model # or Name	Model Description	Limits of Use
3576.1	1- "5-V Crimp" and "Millennium-V"	Minimum 26 GA Steel, Maximum 24" Wide Panel over Wood Deck	Design Pressure = 112.5 psf Increased design pressures at perimeter and corner areas, in compliance with Florida Building Code, Chapter 16, may be met through rational analysis. The required design wind loads shall be determined for each project. The maximum fastener spacing listed herein shall not be exceeded. All rational analysis computations shall be prepared by a qualified design professional, as required by Florida Building Code, Section 104. This product is not approved for use in the High Velocity Hurricane Zone. Refer to Evaluation Report.
3576.2	2- "Millennium Rib"	Minimum 29 GA Steel, Maximum 36" Wide Panel over Wood Deck	Design Pressure = 71 psf Increased design pressures at perimeter and corner areas, in compliance with Florida Building Code, Chapter 16, may be met through rational analysis. The required design wind loads shall be determined for each project. The maximum fastener spacing listed herein shall not be exceeded. All rational analysis computations shall be prepared by a qualified design professional, as required by Florida Building Code, Section 104. This product is not approved for use in the High Velocity Hurricane Zone. Refer to Evaluation Report.

MILLENNIUM
METALS, INC.
10200 EASTPORT ROAD • JACKSONVILLE, FL 32218
904-358-8366 • WATTS 1-877-358-7653 (ROOF)
FAX 904-358-8285

Rib Panel

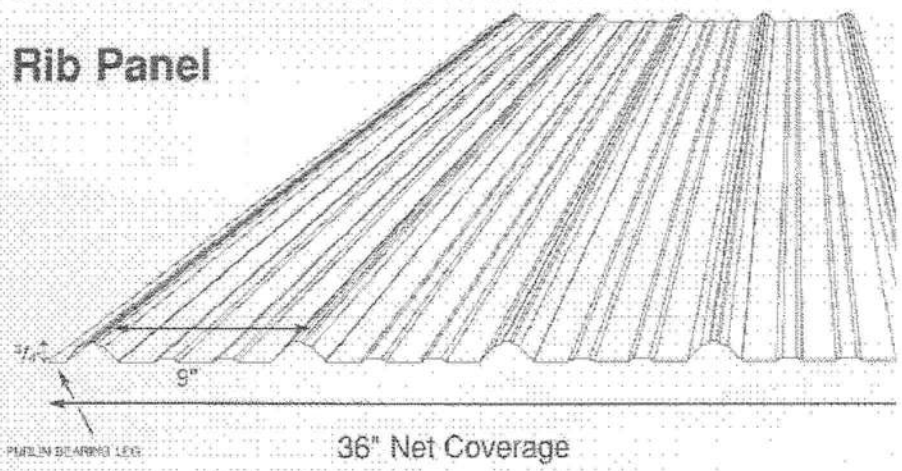

36" Net Coverage

38" Overall Width

Specifications:

For use on Slopes 3/12 or Greater!

Gauge	Finishes	Thickness	ASTM & Grade Specifications
29	Galvanized	.0142	ASTM A-653 Grade 80 Structural Steel
29	* PTD Galvanized	.0142	ASTM A-653 Grade 80 Structural Steel
26	** PTD Galvanized	.0185	ASTM A-653 Grade 80 Structural Steel
29	Acrylic Galvalume	.0142	ASTM A-792 AZ55 Grade 80 Structural Steel
26	Acrylic Galvalume	.0185	ASTM A-792 AZ55 Grade 80 Structural Steel

* RED, WHITE, BLUE, GRAY, HUNTER GREEN, STONE, BROWN, CHARCOAL and TAN.
** RED, WHITE, HUNTER GREEN, GALLERY BLUE, TAN, STONE, and GRAY.

MILLENNIUM METALS OFFERS A LIMITED 25 YEAR WARRANTY ON PAINTED PANELS AND A LIMITED 20 YEAR WARRANTY ON MILL FINISHED GALVALUME PANELS. CONSULT YOUR DISTRIBUTOR ON REQUESTING WARRANTY.

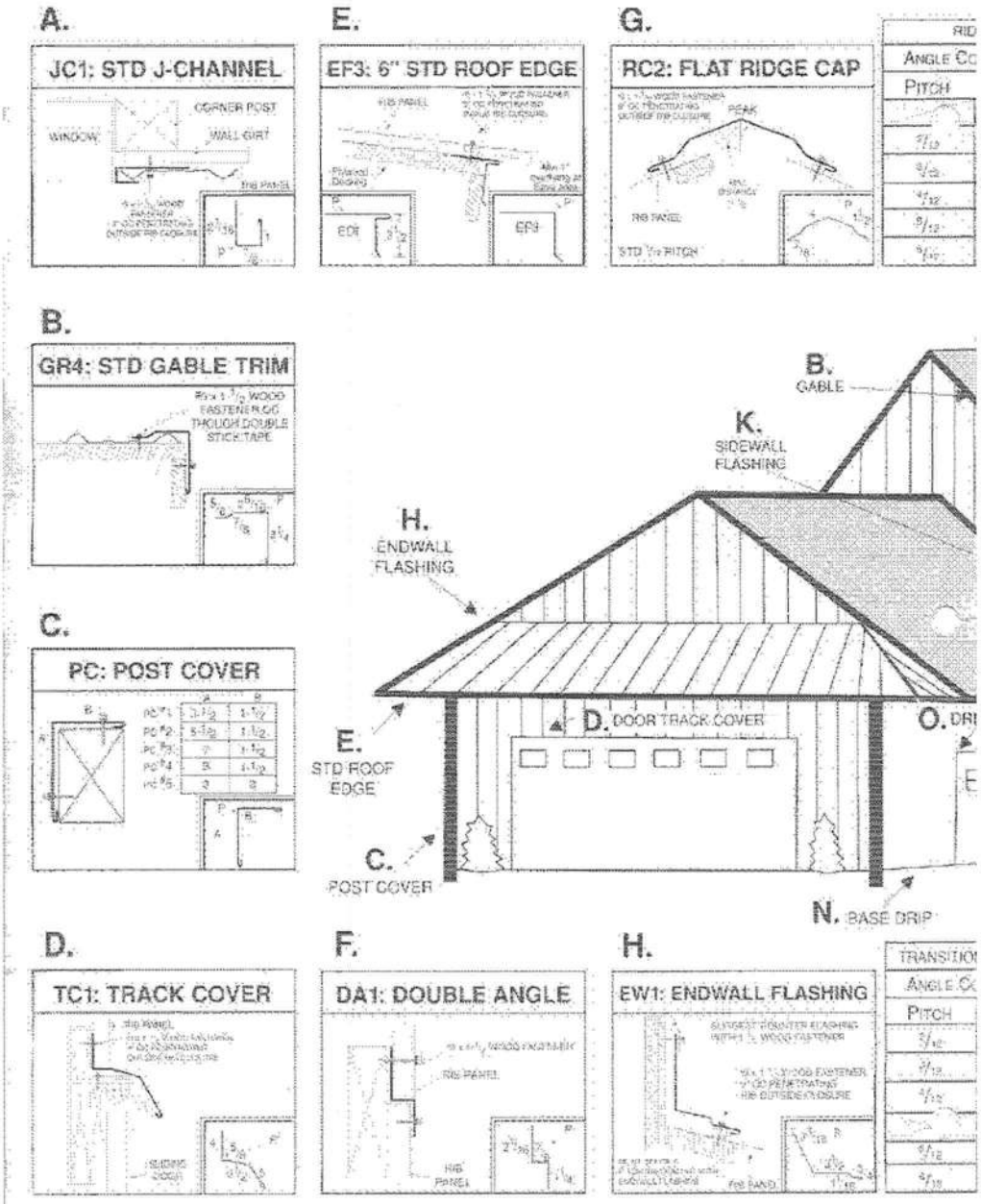
A.
JC1: STD J-CHANNEL
CORNER POST
WINDOW
WALL GIRT
RIB PANEL
E.
EF3: 6" STD ROOF EDGE
RIB PANEL
G.
RC2: FLAT RIDGE CAP
PEAK
RIB PANEL
B.
GR4: STD GABLE TRIM
WOOD FASTENER PLUG THOUGH DOUBLE STICK TAPE
C.
PC: POST COVER
B.
GABLE
K.
SIDEWALL FLASHING
H.
ENDWALL FLASHING
D. DOOR TRACK COVER
E.
STD ROOF EDGE
C.
POST COVER
N. BASE DRIP
D.
TC1: TRACK COVER
F.
DA1: DOUBLE ANGLE
RIB PANEL
H.
EW1: ENDWALL FLASHING
ANGLE
PITCH
MILLENNIUM METALS, INC.
10200 Eastport Rd., Jacks

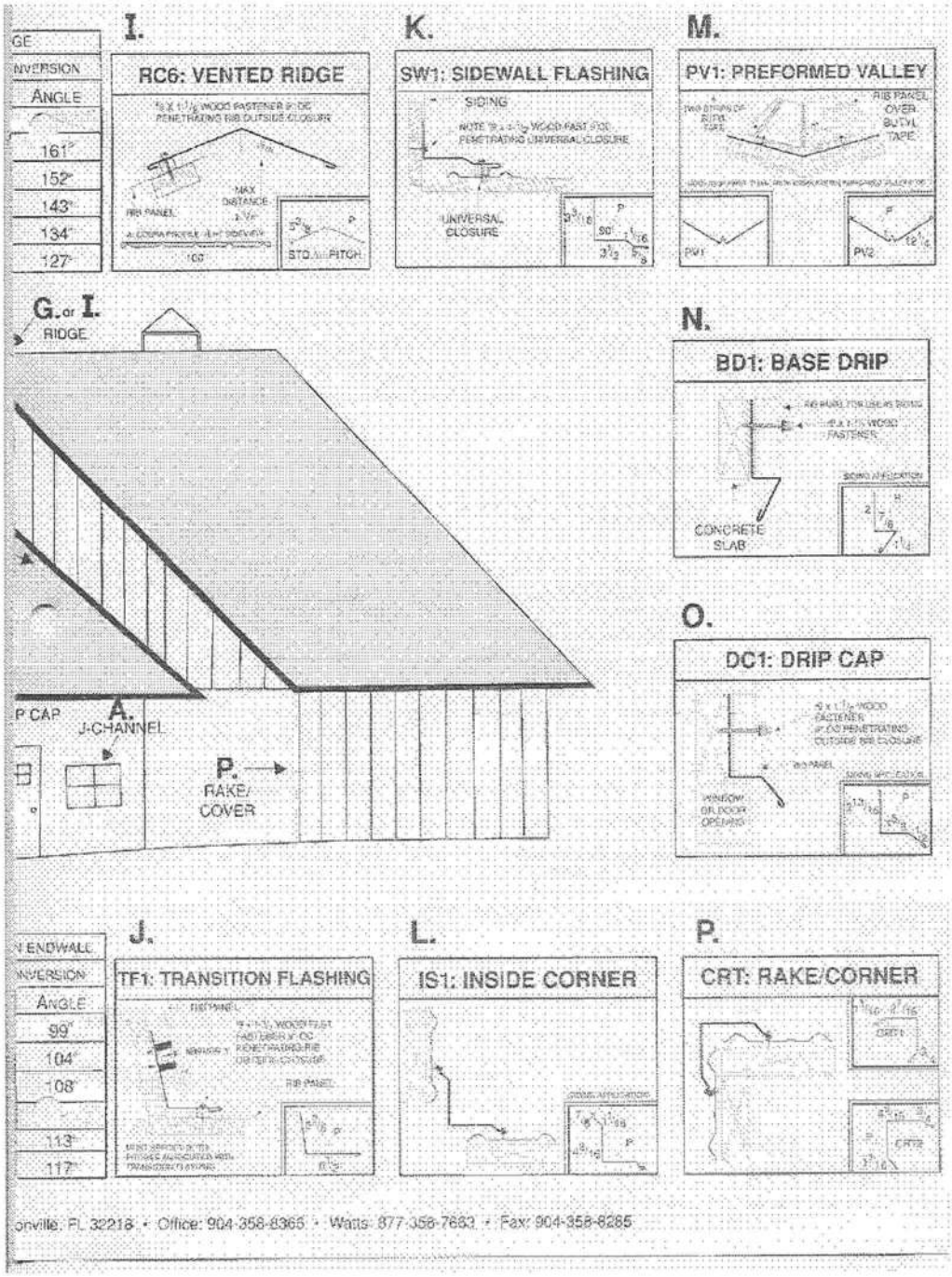

onville, FL 32218 • Office: 904-358-8365 • Watts: 877-358-7683 • Fax: 904-358-8285

RIB PANEL INSTALLATION GUIDE

SIDE LAP DETAIL

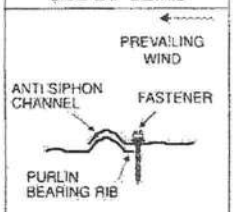

DETAIL A

RIB PANEL FASTENING RECOMMENDATIONS

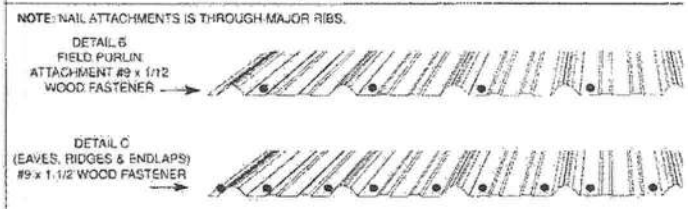

DETAIL B & C

Millennium Metals recommends the use of a solid deck with felt on residential applications. This recommendation is made to help elim condensation issues. Battens are optional with solid deck applications or over existing shingles. Note shingles cannot be battened ove more than two layers exist. Roof decking integrity should be checked to insure adequate pull out in **any reroofing** application. Battens should be 1 x 3 yellow pine spaced on 16" centers. Open purlin applications on commercial or agricultural applications should be spac no more than 24" on center.

ROOF APPLICATION:

Step 1: Make sure the deck is level and square.

Step 2: Install Eave Drips/Roof Edge and Valleys according to details. Remember to use inside closure strips between Eave and Pan to eliminate water infiltration. Trim should be fastened 7" on center.

Step 3: Panel placement should begin on the Gable End opposite of the Prevailing Wind. Starter Edge should be the Lap Edge. (Opp of Purlin Bearing Leg) after lying first panel check for squareness panel 2 should be lapped over Purlin Bearing Leg of panel 1 with th Edge. A minimum 1" overhang is recommended at the Eave. Alternative method of panel placement may begin in the center of the roo Often this method is used when the area covered is not disable by 3' or traditional placement allows for a Pipe Flashing to occur in a Side Lap. Endlaps must be a minimum of 12" and two strips of Butyl Sealant is recommended 8" on uphill side of lap to keep watertig

Step 4: Fasten panel according to Detail C or D depending on the area of application. Detail D shows additional screws to be spaced each side of major Ribs for all Eaves, Ridges and Endlaps.

Step 5: Any field cutting must be done with metal nibblers, metal snips or blades designed for metal cutting. No cutting should be done roof, as it will cause iron shavings to be spread and adhere to roof panels. Proper cutting should be done exposed panel finished side c

Step 7: Install the remaining accessories such as Pipe Boots, Rib Profile Vent, Ridge Cap and Gable Flashing. Butyl Sealant, Caulki Closures are necessary to maintain watertight seals. Inspect screw fasteners to insure that they are installed properly. (See Detail D)

Step 8: Field clean the roof surface with broom to be sure any iron shavings are removed.

PITCH ALERT!!! RIB PANEL REQUIRES A MINIMUM 3/12 PITCH TO MAINTAIN WATER DRAINAGE. THIS PRODUCT IS CONSIDE STRUCTURAL HOWEVER IT IS NOT SAFE TO WALK ON.

ATTENTION INSTALLER!!! WHEN USING FASTENERS TO PENETRATE STEEL SHEETS THE IRON PARTICLES TEND TO GO AIRE AND SETTLE ON THE SHEET. IT IS NECESSARY TO REMOVE THESE PARTICLES TO PREVENT EMBEDMENT AND RUST MAR

FASTENERS #9 X 1-¼ WOOD TYPE

CORRECT	TOO LOOSE	TOO TIGHT
EDPM MATERIAL VISIBLE AT WASHER. FASTENER IS PROPERLY INSTALLED.	EDPM NOT AT VISIBLE JOINT. NOT ENOUGH COMPRESSION TO MAKE A SEAL.	EDPM IS PINNED AND IS PROTRUDING BEYOND EDGE OF FASTENER.

DETAIL D

ENGINEERING CONSIDERATIONS

Code requirements vary from area to area and job type as well a roof configuration. Job specific engineering is available for a nomin fee by a structural engineer. The engineering is not a servic provided by Millennium Metals and we accept no liability as t contracted work between parties. Please consult your local buildin code for proper procedures so we may assist you wit your application.

MILLENNIUM METALS INC. 10200 EASTPORT RD. JACKSONVILLE, FL 32218
PHONE: 904-358-8366 • WATTS: 1-877-358-7663 • FAX: 904-358-8285