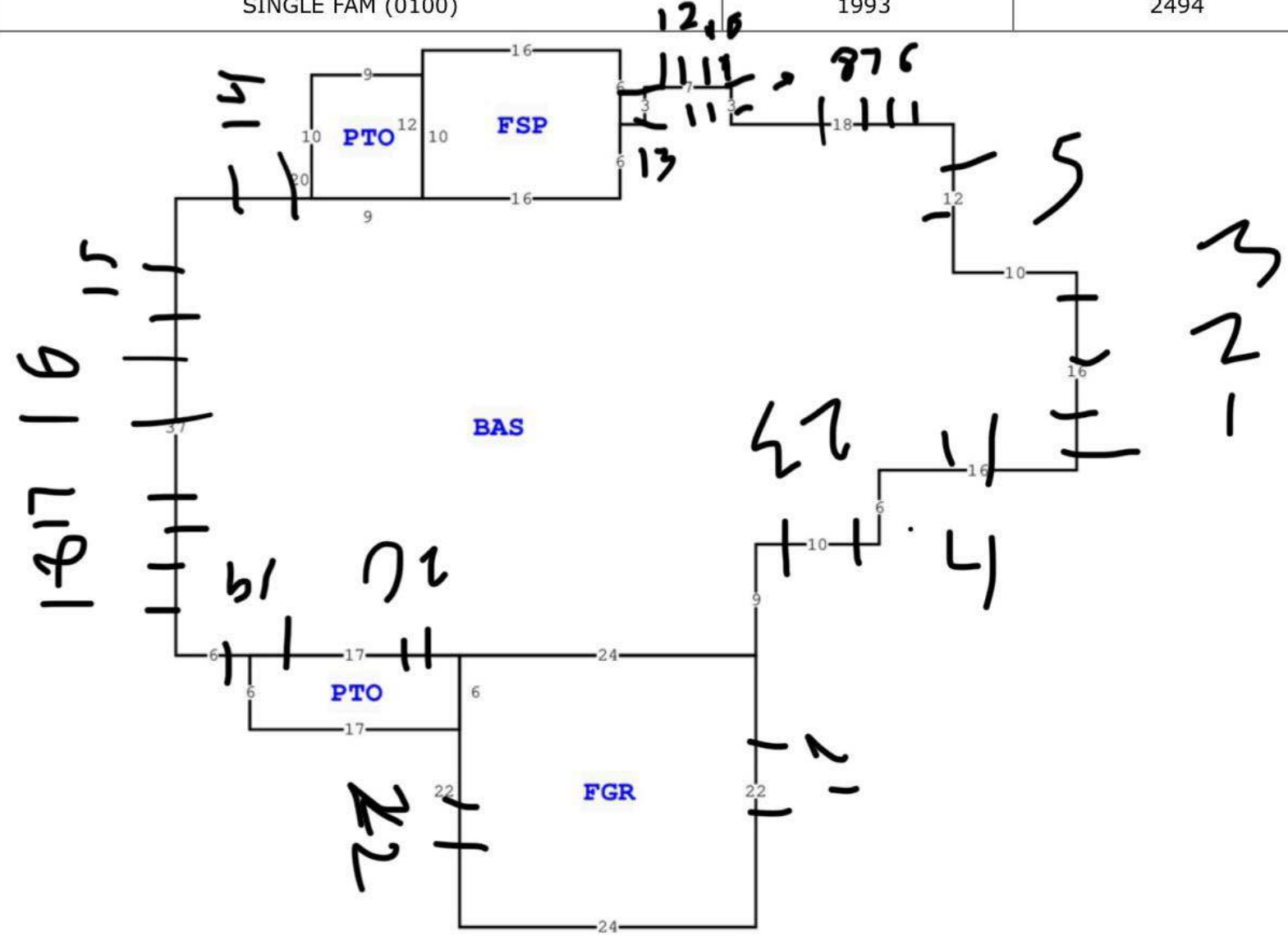em	Bldg Desc	Year Blt	Base S.F.	
	SINGLE FAM (0100)	1993	2494