TOP LINE ENGINEERING, LLC
STRUCTURAL ENGINEERS

January 5, 2021

Mr. Thomas Campbell
Florida Department of Business and Professional Regulation
2601 Blair Stone Road, Building C
Tallahassee, Florida 32399-6563

RE: Plan Approval
Handi House Manufacturing
Plan # HH-S-170D-20

Dear Mr. Campbell,

Pursuant to the requirements of the Department of Business & Professional Regulation, the above referenced documents have been reviewed for compliance with:

2020 Florida Building Code, 7th Edition
2017 National Electrical Code (NFPA-70)
Florida Product Approval Rule 61G20-3.006 (FAC)

All mandatory comments have been satisfied and plans are approved for construction by a currently approved modular building manufacturer.

These documents were reviewed for only what is to be constructed in the factory. Any work performed at the site, such as the foundation, is under the authority and jurisdiction of the local Building Official.

Third Party Agency approval in no way alleviates the builder/manufacturer from complying with all the applicable codes, which may or may not be identified in this review. Approval also does not preclude the local building official from requiring work be performed that was not previously reviewed, approved, and constructed under the State of Florida's Manufactured (Modular) Building Program to make the building, code compliant, for the intended use.

A signed and sealed set of plans are maintained on file with Top Line Engineering, LLC.

If you require my assistance in any way, please do not hesitate to contact me.

Thank you.

Respectfully,

William E. Neary, III
Business Partner
Top Line Engineering, LLC
BILL.TLE@yahoo.com

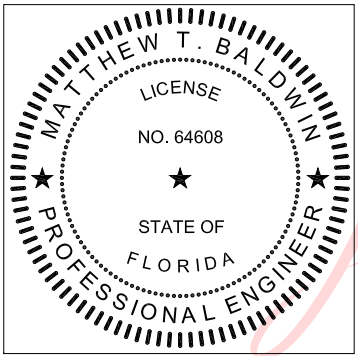

Digitally signed by Matthew Baldwin
Date: 2021.05.03 09:21:14 -04'00'

PRINTED COPIES OF THIS DOCUMENT ARE NOT CONSIDERED SIGNED AND SEALED AND THE SHA AUTHENTICATION CODE MUST BE VERIFIED ON ANY ELECTRONIC COPIES

****** Please note: Any questions regarding local permitting should be directed to the Manufacturer. The Manufacturer's contact information can be found in the title block of the plans.***

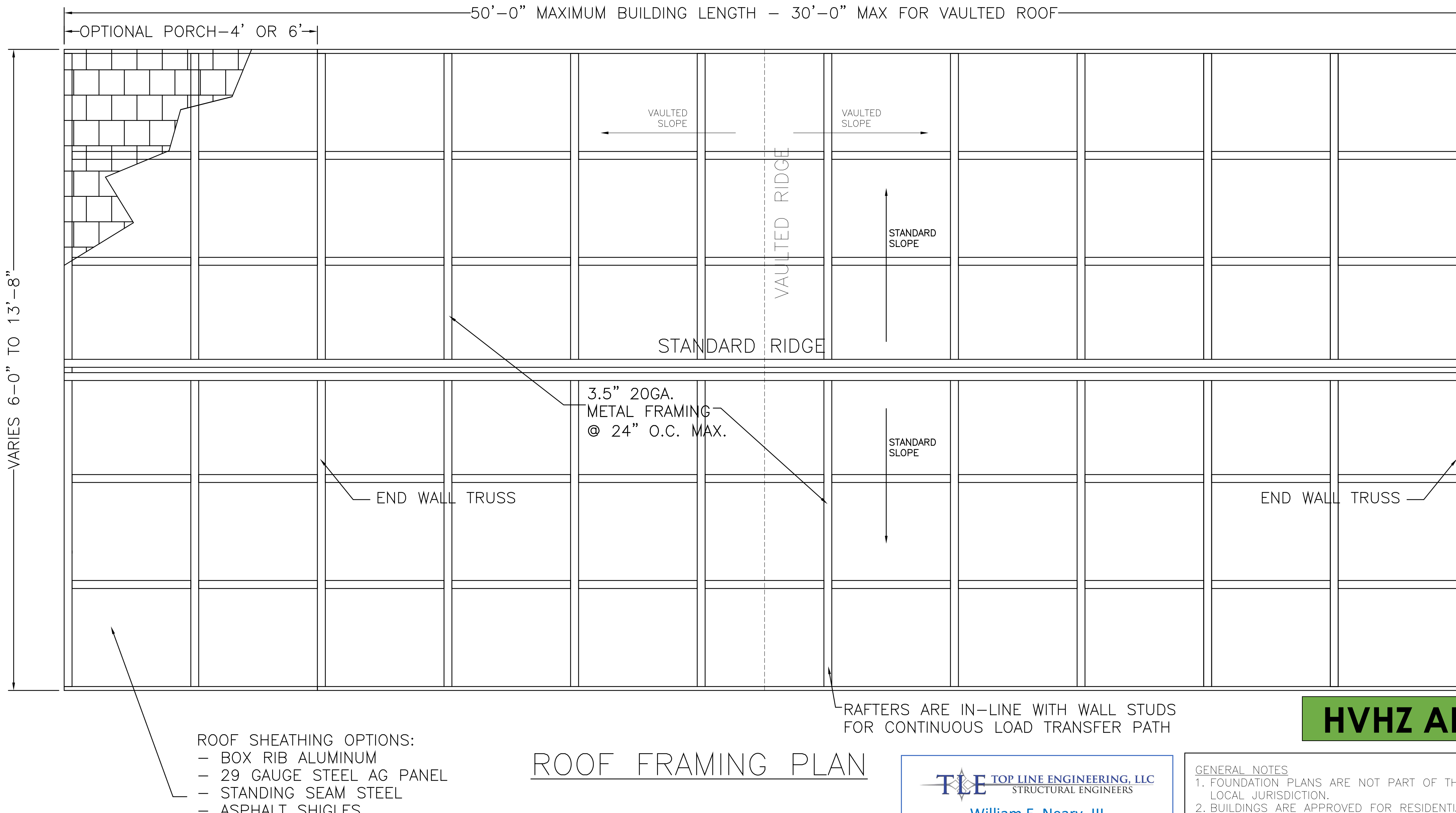

ROOF FRAMING PLAN

HVHZ APPROVED

TLE TOP LINE ENGINEERING, LLC
STRUCTURAL ENGINEERS
William E. Neary, III
SMP-51, SMI-79, ICC 5185040
10649 Oakview Pointe Terrace
Gotha, Florida 34734

****** Please note: Any questions regarding local permitting should be directed to the Manufacturer. The Manufacturer's contact information can be found in the title block of the plans.***

MAXIMUM DESIGN PRESSURES								
170mph BASIC WIND SPEED								
ZONE	1	2n	2r	2e	3r	3e	4	5
	+21.8 −48.2	+31.9 −115.2	+17.4 −62.6	+17.4 −24.7	+31.9 −136.9	+31.9 −115.2	+31.9 −35.5	+38.2 −48.4

APPROVED FOR HVHZ USE

FBC 1626.1 EXCEPTION: F. STORAGE SHEDS THAT ARE NOT DESIGNED FOR HUMAN HABITATION AND THAT HAVE A FLOOR AREA OF 720 SQUARE FEET (67 M2) OR LESS ARE NOT REQUIRED TO COMPLY WITH THE MANDATORY WINDBORNE DEBRIS IMPACT STANDARDS OF THIS CODE.

GENERAL NOTES

1. FOUNDATION PLANS ARE NOT PART OF THIS PLAN SET AND ARE GOVERNED BY LOCAL JURISDICTION.
2. BUILDINGS ARE APPROVED FOR RESIDENTIAL LAWN STORAGE ONLY
3. THIS BUILDING IS EXEMPT FROM THE FECC PER SECTIONS R101.4.2.4, R402.1.
4. REFER TO TIE DOWN DETAILS FOR PROPER INSTALLATION REQUIREMENTS TO MEET CODE.
5. ALL LUMBER FOR CONSTRUCTION WILL BE #2 SYP EXCEPT AS NOTED.
6. GUTTERS SHALL BE SITE INSTALLED PER THE LOCAL AUTHORITY HAVING JURISDICTION AND PERMITTING REQUIREMENTS.
7. ALL WINDOWS AND DOORS TO MEET THE MINIMUM SPECIFICATIONS PER THE APPROVED PLANS AND THE FLORIDA BUILDING CODE.
8. IN ACCORDANCE WITH FBC 1609.1.2, "STORAGE SHEDS THAT ARE NOT DESIGNED FOR HUMAN HABITATION AND THAT HAVE A FLOOR AREA OF 720 SQUARE FEET OR LESS ARE NOT REQUIRED TO COMPLY WITH THE MANDATORY WINDBORNE DEBRIS IMPACT STANDARDS OF THIS CODE".
9. IN ACCORDANCE WITH FBC 1010.1.1, EXCEPTION (10.) BUILDINGS THAT ARE 400 SQ–FT OR LESS AND THAT ARE INTENDED FOR USE IN CONJUNCTION WITH ONE– AND TWO–FAMILY RESIDENCES ARE NOT SUBJECT TO THE DOOR HEIGHT AND WIDTH REQUIREMENTS OF THIS CODE. STRUCTURES 400 SQ–FT OR MORE SHALL HAVE AN 80" MINIMUM DOOR.
10. IN ACCORDANCE WITH FLORIDA STATUTE 553.80 (1)D, LAWN STORAGE BUILDINGS AND STORAGE SHEDS BEARING THE INSIGNIA OF APPROVAL OF THE DEPARTMENT ARE NOT SUBJECT TO 553.842 (FLORIDA PRODUCT APPROVALS) BUT SHALL MEET THE DESIGN WIND LOAD REQUIREMENTS OF THE 2020 FBC 7TH EDITION.
11. FLAT METAL STRAPS CAN BE BENT AROUND STRUCTURAL MEMBERS OF WALL STUDS, TRUSSES, CHORDS, ETC. TO HELP SECURE THESE MEMBERS, PROVIDED THAT THE ADDED BEND DOES NOT INTERFERE WITH ANY OF THE EXISTING BREAKS/BENDS IN THE STRAP.
12. AS PER FBC SECTION 1626.1 EXCEPTION (F): STORAGE SHEDS THAT ARE NOT DESIGNED FOR HUMAN HABITATION AND THAT HAVE A FLOOR AREA OF LESS THAN 720 SQUARE FEET OR LESS ARE NOT REQUIRED TO COMPLY WITH THE MANDATORY WINDBORNE DEBRIS IMPACT STANDARDS OF THIS CODE.
13. COMPONENTS/CLADDING ARE IN COMPLIANCE WITH THE 2020 FBC 7TH EDITION.
14. SHEDS LOCATED IN FLOOD HAZARD AREAS MUST COMPLY WITH THE LOCAL FLOOD ZONE REGULATIONS.
15. IF A WALL IS FRAMED FOR FUTURE HVAC UNITS THAT WILL BE APPROVED BY THE AHJ AND LOCAL REQUIREMENTS FOR PERMITTING.
16. WINDOWS AND DOORS INSTALLED BY THE CUSTOMER ARE REQUIRED TO HAVE APPROVAL OF THE LOCAL AHJ AND LOCAL PERMITTING REQUIREMENTS.
17. HVHZ COMPONENTS FOR SHEDS REQUIRE THAT INSTALLATION PER MANUFACTURERS INSTRUCTIONS.

Handi-Houses ©
THEY'RE PORTABLE

P.O. BOX 830
SWAINSBORO, GA 30401
PHONE NUMBER:
(800) 722–6436

CODE INFORMATION

CODE VERSION	FBC 2020 7th Edition, ASCE–7–16, 2017 NEC
MANUFACTURER	HANDI–HOUSE
BUILDING TYPE	MANUFACTURED BUILDING RESIDENTIAL LAWN STORAGE
CONSTRUCTION TYPE	V–B
FIRE PROTECTION	NONE
FIRE SUPPRESSION SYSTEM	NONE
OCCUPANCY	UTILITY
ALLOWABLE NUMBER OF STORIES	1
BASIC WIND SPEED	V_{ult}–170mph
EXPOSURE	D
ENCLOSURE	ENCLOSED
INTERNAL PRESSURE COEFFICIENT	+/– 0.18
IMPORTANCE FACTOR	1.0
ROOF DEAD LOAD	10PSF
ROOF LIVE LOAD	20PSF OR 300lb POINT LOAD
FLOOR DEAD LOAD	10PSF
FLOOR LIVE LOAD	75/125PSF
"R" RATING OF WALLS, FLOOR, ROOF	N/A
MODULES PER BUILDING	1
HURRICANE PROTECTION USAGE	NO
HURRICANE SHELTER USAGE	NO
SQUARE FOOTAGE	719 SQ.FT. OR LESS

REVISIONS

REV	DESCRIPTON	DATE	BY

Drawn By:	MTB
Date:	12–9–20
Scale:	NTS
Model#:	HH–S–170D

MATTHEW T. BALDWIN
LICENSE
NO. 64608
STATE OF FLORIDA
PROFESSIONAL ENGINEER
1/5/21

Matthew T. Baldwin P.E.
Florida License #64608

TITLE: ROOF LAYOUT – STEEL SINGLE WIDE

Sheet: FBPR–1 OF 7

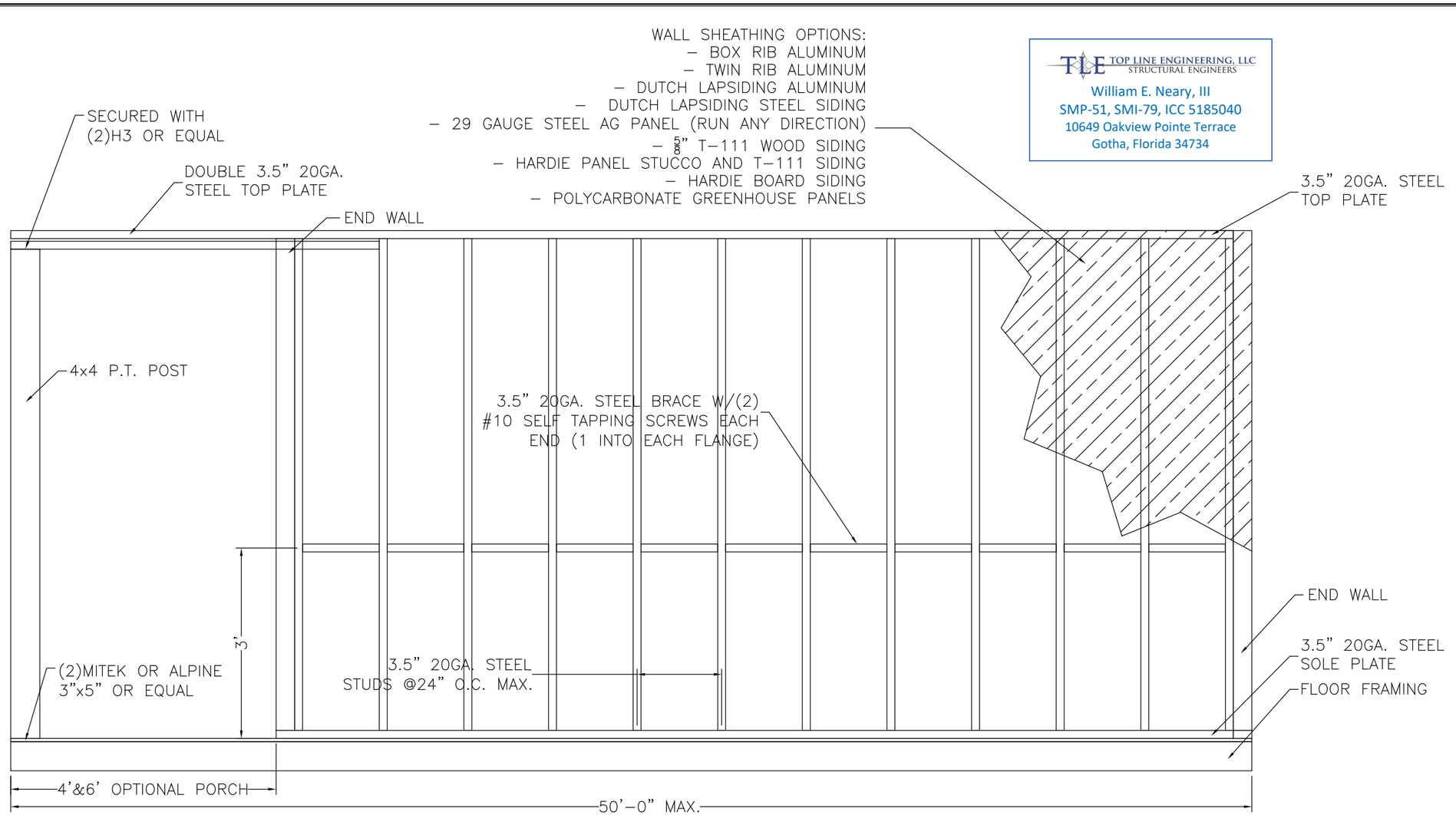

STANDARD WALL DETAIL

STRAP & FASTENER SCHEDULE {A}					
RAFTER{B}	PART#/DESC.	UPLIFT	WALL FASTENER	RAFTER FASTENER	PLATE FASTENER
	H3	320	4–8D	4–8D	–
PORCH	PART#/DESC.	UPLIFT	COLUMN FASTENER	RAFTER FASTENER	
	LTS–12	620	6–10DX1.5"	6–10DX1.5"	
WALL TO FLOOR{C}	PART#/DESC.	UPLIFT	WALL FASTENER	FLOOR FASTENER	
	LSTA–18	1,110	7–10D	7–10D	
HEADER{D}	PART#/DESC.	UPLIFT	STUD FASTENER	HEADER FASTENER	
	TP–3S	N/R	5–3"X 0.131"	5–3"X 0.131"	
	HP40,41,80,81	4,725	5–3"X 0.131"	5–3"X 0.131"	
TIE–DOWNS	PART#/DESC.	UPLIFT	WALL FASTENER	FLOOR FASTENER	
	20GA. 1¼" WIDE	4,725	7–10DX1.5"	–	
	5/8"X 30" ANCHOR	4,300	–	–	
A. ALL STRAPS CAN BE SUBSTITUTED WITH AN EQUIVALENT BRAND MEETING SAME STRENGTHS.					
B. RAFTER TIES TO STUD WALL TO BE AT EVERY CONNECTION FOR 24" O.C. & CAN BE EVERY OTHER FOR 16" O.C. BUT IS REQUIRED ON CORNERS AND STUDS ADJACENT TO CORNERS.					
C. ONLY NEEDED ON ALUMINUM & VINYL SHEATHING WALLS.					
D. HEADERS OVER 6' SPAN.					

STRAP & SIMPSON STRONG–DRIVE® SD SCREW SCHEDULE					
RAFTER	PART#/DESC.	UPLIFT	WALL FASTENER	RAFTER FASTENER	PLATE FASTENER
	H3	320	4–SD9X1.5"	4–SD9X1.5"	–
PORCH	PART#/DESC.	UPLIFT	COLUMN FASTENER	RAFTER FASTENER	
	LTS–12	895	6–SD9X1.5"	6–SD9X1.5"	
WALL TO FLOOR{A}	PART#/DESC.	UPLIFT	WALL FASTENER	FLOOR FASTENER	
	LSTA–18	1,235	7–SD9X1.5"	7–SD9X1.5"	
TIE–DOWNS	PART#/DESC.	UPLIFT	WALL FASTENER	FLOOR FASTENER	
	20GA. 1¼" WIDE	4,725	7–SD9X1.5"	–	
	5/8"X 30" ANCHOR	4,300	–	–	
A. ONLY NEEDED ON ALUMINUM SHEATHING WALLS.					
B. HEADERS OVER 6' SPAN.					

TOP LINE ENGINEERING, LLC
STRUCTURAL ENGINEERS
William E. Neary, III
SMP-51, SMI-79, ICC 5185040
10649 Oakview Pointe Terrace
Gotha, Florida 34734

Handi-Houses ©
THEY'RE PORTABLE
P.O. BOX 830
SWAINSBORO, GA 30401
PHONE NUMBER:
(800) 722–6436

CODE INFORMATION	
CODE VERSION	FBC 2020 7th Edition, ASCE–7–16, 2017 NEC
MANUFACTURER	HANDI–HOUSE
BUILDING TYPE	MANUFACTURED BUILDING RESIDENTIAL LAWN STORAGE
CONSTRUCTION TYPE	V–B
FIRE PROTECTION	NONE
FIRE SUPPRESSION SYSTEM	NONE
OCCUPANCY	UTILITY
ALLOWABLE NUMBER OF STORIES	1
BASIC WIND SPEED	V_{ult}–170mph
EXPOSURE	D
ENCLOSURE	ENCLOSED
INTERNAL PRESSURE COEFFICIENT	+/– 0.18
IMPORTANCE FACTOR	1.0
ROOF DEAD LOAD	10PSF
ROOF LIVE LOAD	20PSF OR 300lb POINT LOAD
FLOOR DEAD LOAD	10PSF
FLOOR LIVE LOAD	75/125PSF
"R" RATING OF WALLS, FLOOR, ROOF	N/A
MODULES PER BUILDING	1
HURRICANE PROTECTION USAGE	NO
HURRICANE SHELTER USAGE	NO
SQUARE FOOTAGE	719 SQ.FT. OR LESS

REVISIONS			
REV	DESCRIPTON	DATE	BY

TITLE: ROOF LAYOUT – STEEL SINGLE WIDE

Drawn By:	MTB
Date:	12–9–20
Scale:	NTS
Model#:	HH–S–170D

MATTHEW T. BALDWIN LICENSE NO. 64608 STATE OF FLORIDA PROFESSIONAL ENGINEER
1/5/21

Matthew T. Baldwin P.E.
Florida License #64608

Sheet: FBPR–2 OF 7

2021-01-05 TOP LINE ENGINEERING APPROVAL PLAN # HH-S-170D-20 *** HVHZ APPROVED

TOP LINE ENGINEERING, LLC
STRUCTURAL ENGINEERS
William E. Neary, III
SMP-51, SMI-79, ICC 5185040
10649 Oakview Pointe Terrace
Gotha, Florida 34734

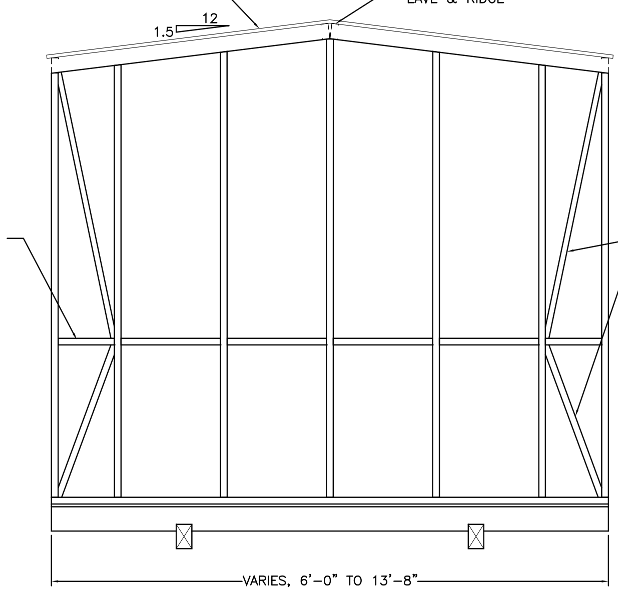

END WALL FRAMING OPTION

WALL OPENING FOR SIDE WALLS ARE TO BE FRAMED SIMILAR TO THOSE SHOWN HERE FOR END WALLS

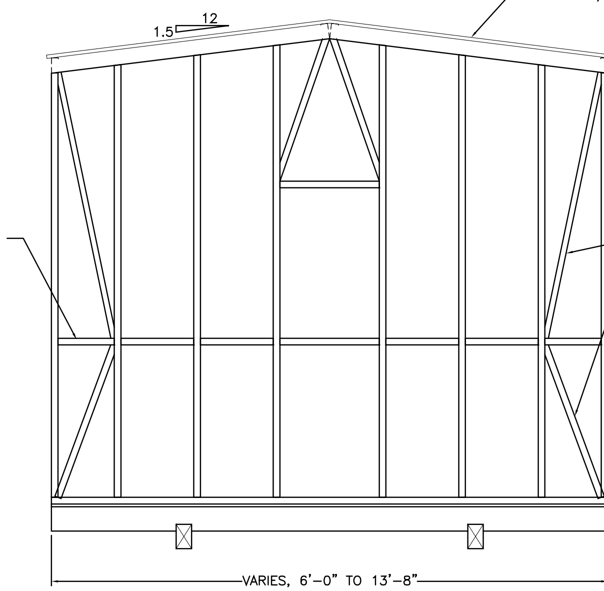

END WALL FRAMING OPTION

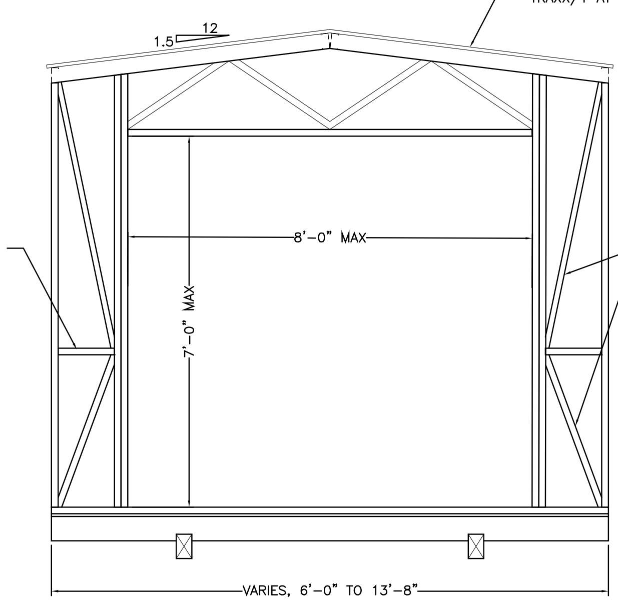

END WALL FRAMING OPTION

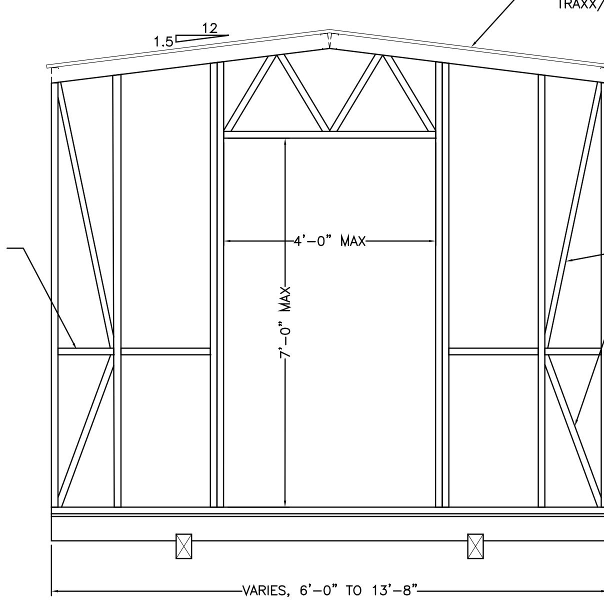

END WALL FRAMING OPTION

Handi-Houses ©
THEY'RE PORTABLE

P.O. BOX 830
SWAINSBORO, GA 30401
PHONE NUMBER:
(800) 722-6436

CODE INFORMATION

CODE VERSION	FBC 2020 7th Edition, ASCE-7-16, 2017 NEC
MANUFACTURER	HANDI–HOUSE
BUILDING TYPE	MANUFACTURED BUILDING RESIDENTIAL LAWN STORAGE
CONSTRUCTION TYPE	V–B
FIRE PROTECTION	NONE
FIRE SUPPRESSION SYSTEM	NONE
OCCUPANCY	UTILITY
ALLOWABLE NUMBER OF STORIES	1
BASIC WIND SPEED	V_{ult}–170mph
EXPOSURE	D
ENCLOSURE	ENCLOSED
INTERNAL PRESSURE COEFFICIENT	+/– 0.18
IMPORTANCE FACTOR	1.0
ROOF DEAD LOAD	10PSF
ROOF LIVE LOAD	20PSF OR 300lb POINT LOAD
FLOOR DEAD LOAD	10PSF
FLOOR LIVE LOAD	75/125PSF
"R" RATING OF WALLS, FLOOR, ROOF	N/A
MODULES PER BUILDING	1
HURRICANE PROTECTION USAGE	NO
HURRICANE SHELTER USAGE	NO
SQUARE FOOTAGE	719 SQ.FT. OR LESS

REVISIONS

REV	DESCRIPTON	DATE	BY

TITLE: ROOF LAYOUT – STEEL SINGLE WIDE

Drawn By:	MTB
Date:	12–9–20
Scale:	NTS
Model#:	HH–S–170D

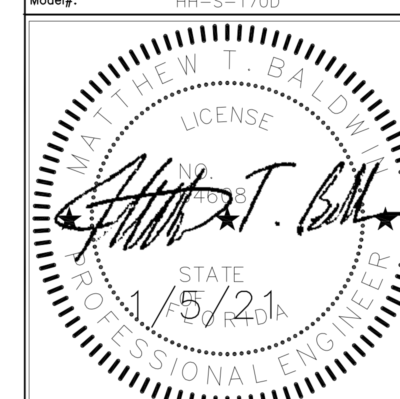

Matthew T. Baldwin P.E.
Florida License #64608

Sheet: FBPR–3 OF 7

TLE TOP LINE ENGINEERING, LLC
STRUCTURAL ENGINEERS
William E. Neary, III
SMP-51, SMI-79, ICC 5185040
10649 Oakview Pointe Terrace
Gotha, Florida 34734

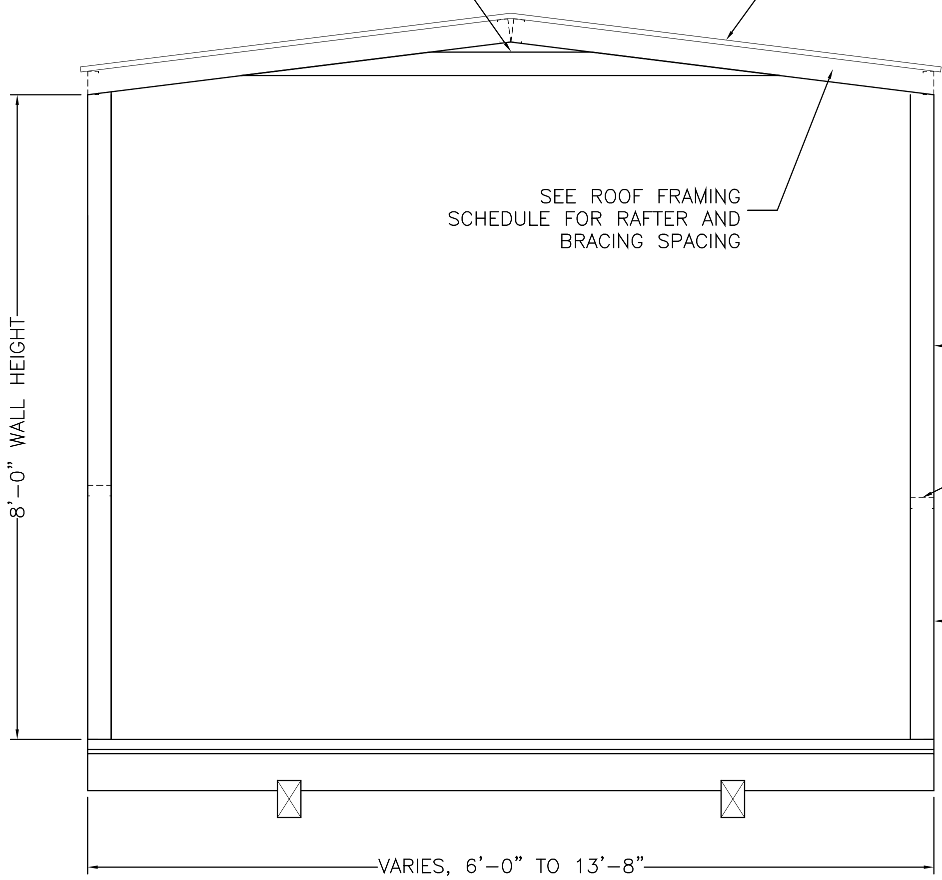

FRAME SECTION

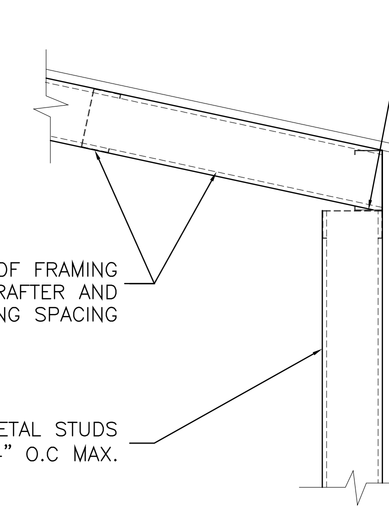

OVERHANG OPTION DETAIL

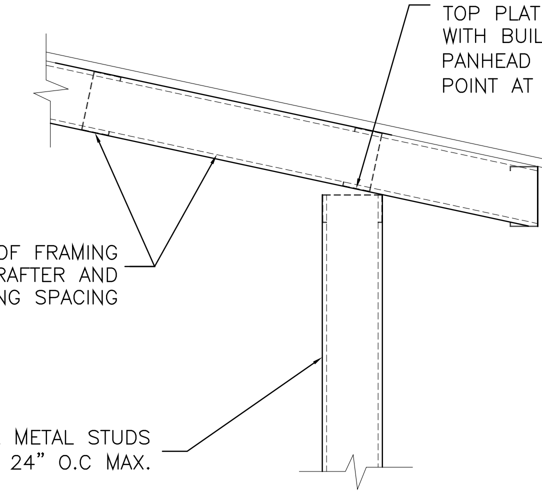

OVERHANG OPTION DETAIL

Handi-Houses ©
THEY'RE PORTABLE
P.O. BOX 830
SWAINSBORO, GA 30401
PHONE NUMBER:
(800) 722–6436

CODE INFORMATION

CODE VERSION	FBC 2020 7th Edition, ASCE–7–16, 2017 NEC
MANUFACTURER	HANDI–HOUSE
BUILDING TYPE	MANUFACTURED BUILDING RESIDENTIAL LAWN STORAGE
CONSTRUCTION TYPE	V–B
FIRE PROTECTION	NONE
FIRE SUPPRESSION SYSTEM	NONE
OCCUPANCY	UTILITY
ALLOWABLE NUMBER OF STORIES	1
BASIC WIND SPEED	V_{ult}–170mph
EXPOSURE	D
ENCLOSURE	ENCLOSED
INTERNAL PRESSURE COEFFICIENT	+/– 0.18
IMPORTANCE FACTOR	1.0
ROOF DEAD LOAD	10PSF
ROOF LIVE LOAD	20PSF OR 300lb POINT LOAD
FLOOR DEAD LOAD	10PSF
FLOOR LIVE LOAD	75/125PSF
"R" RATING OF WALLS, FLOOR, ROOF	N/A
MODULES PER BUILDING	1
HURRICANE PROTECTION USAGE	NO
HURRICANE SHELTER USAGE	NO
SQUARE FOOTAGE	719 SQ.FT. OR LESS

REVISIONS

REV	DESCRIPTON	DATE	BY

TITLE: ROOF LAYOUT – STEEL SINGLE WIDE

Drawn By:	MTB
Date:	12–9–20
Scale:	NTS
Model#:	HH–S–170D

MATTHEW T. BALDWIN LICENSE NO. 64608 STATE OF FLORIDA PROFESSIONAL ENGINEER
1/5/21

Matthew T. Baldwin P.E.
Florida License #64608

Sheet: FBPR–4 OF 7

SKID RUNNER SPACING* UNDER 30' LENGTH		
SHED WIDTH	A	B
6'–0"	15"	42"
8'–0"	18"	60"
10'–0"	18"	84"
11'–0"	24"	84"
11'–8"	28"	84"
13'–0"	36"	84"
13'–8"	40"	84"

*VALUES ARE FROM END OF JOIST TO CENTERS OF SKIDS ONLY.

WIDTH	JOIST SIZE*
6'–0"	2"x4"
6'–1" TO 11'–8"	2"x6"
> 11'–8"	2"x8"

*NOTE: JOISTS CAN BE EITHER #2 S.Y.P. OR 18 GAGE STEEL CHANNELS. THE STEEL CHANNEL ACTUAL DIMENSIONS MATCH THE WOOD ACTUAL DIMENSIONS AND ARE INTERCHANGEABLE.

SKID RUNNER SPACING* 30' LENGTH AND GREATER		
SHED WIDTH	A	B
6'–0"	12"	24"
8'–0"	16"	32"
10'–0"	20"	40"
11'–0"	22"	44"
11'–8"	24"	46"
13'–0"	26"	52"
13'–8"	28"	56"

*VALUES ARE FROM END OF JOIST TO CENTERS OF SKIDS ONLY.

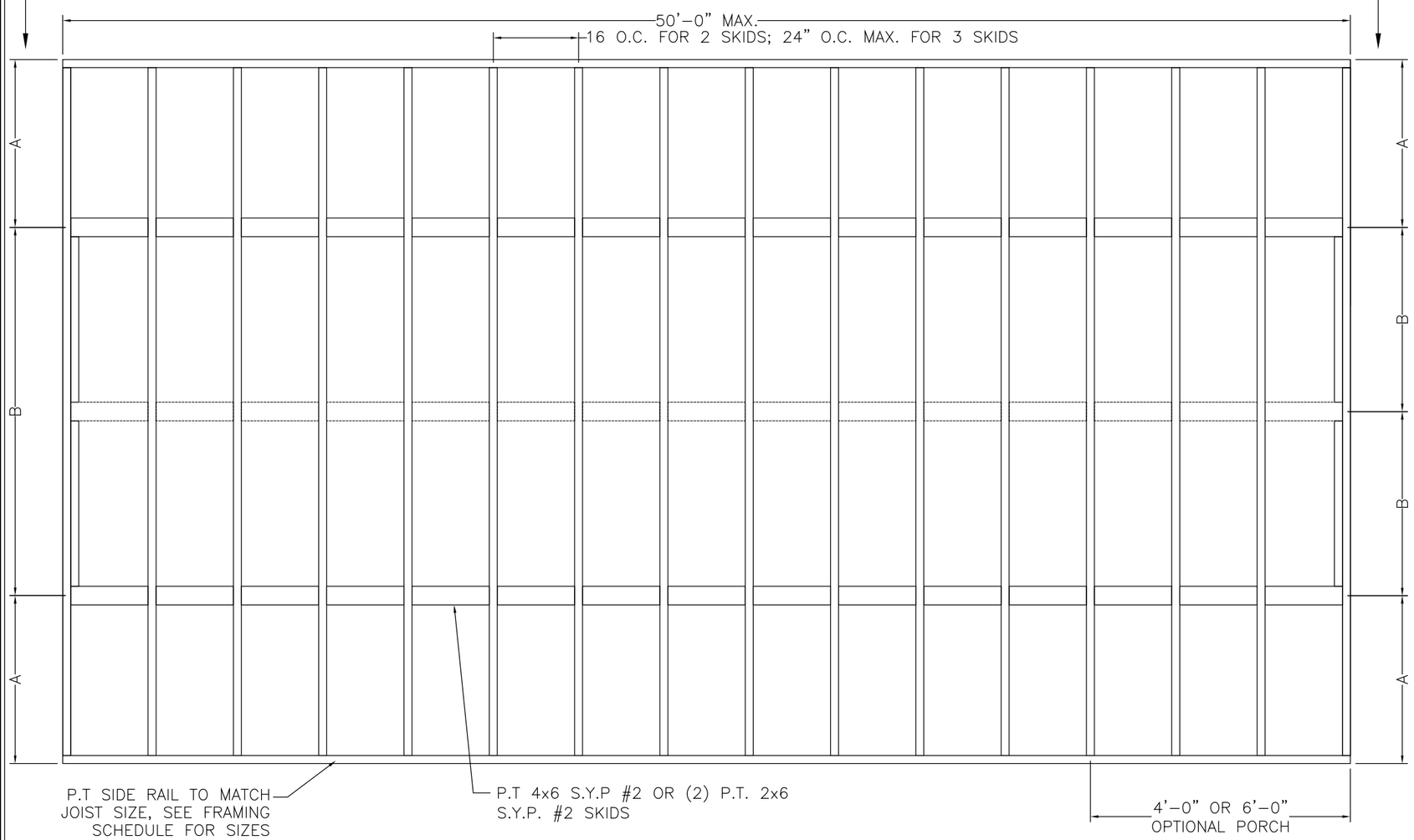

2 & 3 SKID FLOOR FRAMING PLAN

TOP LINE ENGINEERING, LLC
STRUCTURAL ENGINEERS
William E. Neary, III
SMP-51, SMI-79, ICC 5185040
10649 Oakview Pointe Terrace
Gotha, Florida 34734

Handi-Houses ©
THEY'RE PORTABLE
P.O. BOX 830
SWAINSBORO, GA 30401
PHONE NUMBER:
(800) 722–6436

CODE INFORMATION	
CODE VERSION	FBC 2020 7th Edition, ASCE–7–16, 2017 NEC
MANUFACTURER	HANDI–HOUSE
BUILDING TYPE	MANUFACTURED BUILDING RESIDENTIAL LAWN STORAGE
CONSTRUCTION TYPE	V–B
FIRE PROTECTION	NONE
FIRE SUPPRESSION SYSTEM	NONE
OCCUPANCY	UTILITY
ALLOWABLE NUMBER OF STORIES	1
BASIC WIND SPEED	V_{ult}–170mph
EXPOSURE	D
ENCLOSURE	ENCLOSED
INTERNAL PRESSURE COEFFICIENT	+/– 0.18
IMPORTANCE FACTOR	1.0
ROOF DEAD LOAD	10PSF
ROOF LIVE LOAD	20PSF OR 300lb POINT LOAD
FLOOR DEAD LOAD	10PSF
FLOOR LIVE LOAD	75/125PSF
"R" RATING OF WALLS, FLOOR, ROOF	N/A
MODULES PER BUILDING	1
HURRICANE PROTECTION USAGE	NO
HURRICANE SHELTER USAGE	NO
SQUARE FOOTAGE	719 SQ.FT. OR LESS

REVISIONS

REV	DESCRIPTON	DATE	BY

Drawn By: MTB
Date: 12–9–20
Scale: NTS
Model#: HH–S–170D

MATTHEW T. BALDWIN LICENSE NO. 64608 STATE OF FLORIDA PROFESSIONAL ENGINEER
1/15/21

Matthew T. Baldwin P.E.
Florida License #64608

TITLE: ROOF LAYOUT – STEEL SINGLE WIDE

Sheet: FBPR–5 OF 7

2021-01-05 TOP LINE ENGINEERING APPROVAL PLAN # HH-S-170D-20 *** HVHZ APPROVED

TOP LINE ENGINEERING, LLC
STRUCTURAL ENGINEERS
William E. Neary, III
SMP-51, SMI-79, ICC 5185040
10649 Oakview Pointe Terrace
Gotha, Florida 34734

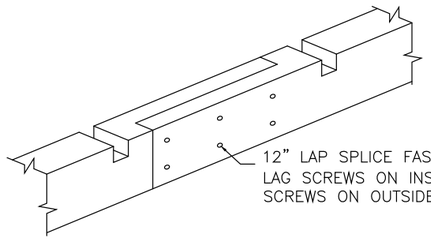

4"x6" P.T. SKID SPLICE

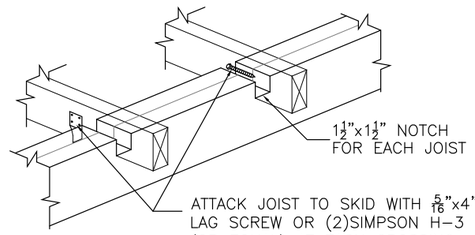

JOIST TO SKID CONNECTION

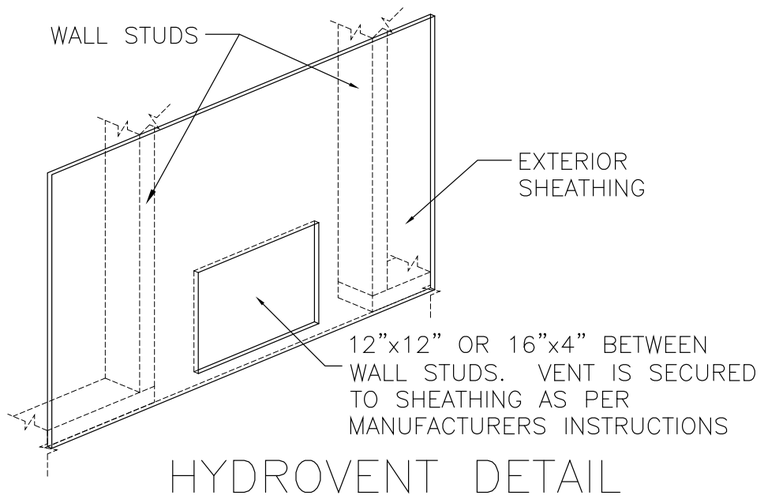

HYDROVENT DETAIL (OPTIONAL)

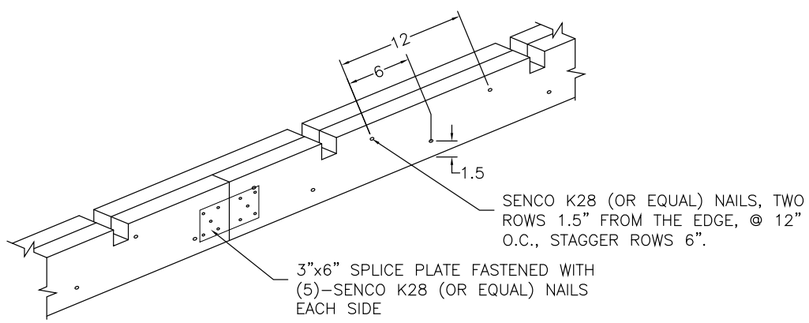

(2) 2"x6" P.T. SKID SPLICE/SECURING

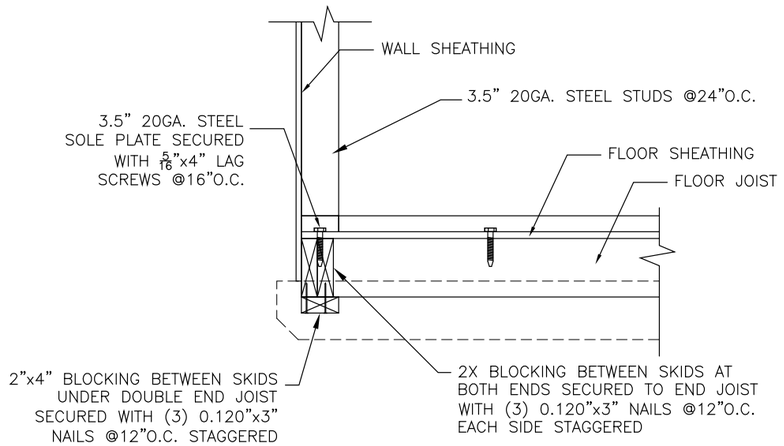

WALL TO FLOOR CONNECTION DETAIL

Handi-Houses ©
THEY'RE PORTABLE
P.O. BOX 830
SWAINSBORO, GA 30401
PHONE NUMBER:
(800) 722-6436

CODE INFORMATION

CODE VERSION	FBC 2020 7th Edition, ASCE-7-16, 2017 NEC
MANUFACTURER	HANDI-HOUSE
BUILDING TYPE	MANUFACTURED BUILDING RESIDENTIAL LAWN STORAGE
CONSTRUCTION TYPE	V-B
FIRE PROTECTION	NONE
FIRE SUPPRESSION SYSTEM	NONE
OCCUPANCY	UTILITY
ALLOWABLE NUMBER OF STORIES	1
BASIC WIND SPEED	V_{ult}-170mph
EXPOSURE	D
ENCLOSURE	ENCLOSED
INTERNAL PRESSURE COEFFICIENT	+/- 0.18
IMPORTANCE FACTOR	1.0
ROOF DEAD LOAD	10PSF
ROOF LIVE LOAD	20PSF OR 300lb POINT LOAD
FLOOR DEAD LOAD	10PSF
FLOOR LIVE LOAD	75/125PSF
"R" RATING OF WALLS, FLOOR, ROOF	N/A
MODULES PER BUILDING	1
HURRICANE PROTECTION USAGE	NO
HURRICANE SHELTER USAGE	NO
SQUARE FOOTAGE	719 SQ.FT. OR LESS

REVISIONS

REV	DESCRIPTON	DATE	BY
1	FLOOD VENT	1/4/21	MTB

TITLE: DETAILS - STEEL SINGLE WIDE

Drawn By:	MTB
Date:	12-9-20
Scale:	NTS
Model#:	HH-S-170D

MATTHEW T. BALDWIN LICENSE NO. 64608 STATE OF FLORIDA PROFESSIONAL ENGINEER
1/5/21

Matthew T. Baldwin P.E.
Florida License #64608

Sheet: FBPR-6 OF 7

2021-01-05 TOP LINE ENGINEERING APPROVAL PLAN # HH-S-170D-20 *** HVHZ APPROVED

ELECTRICAL SYMBOL KEY	
	RECEPTACLE
240	240V RECEPTACLE
$	SINGLE POLE SWITCH
$R	THREE WAY SWITCH
	CEILING MOUNT LIGHT FIXTURE
	WALL MOUNT LIGHT FIXTURE
O	FLUORESCENT LIGHT FIXTURE
J	JUNCTION BOX

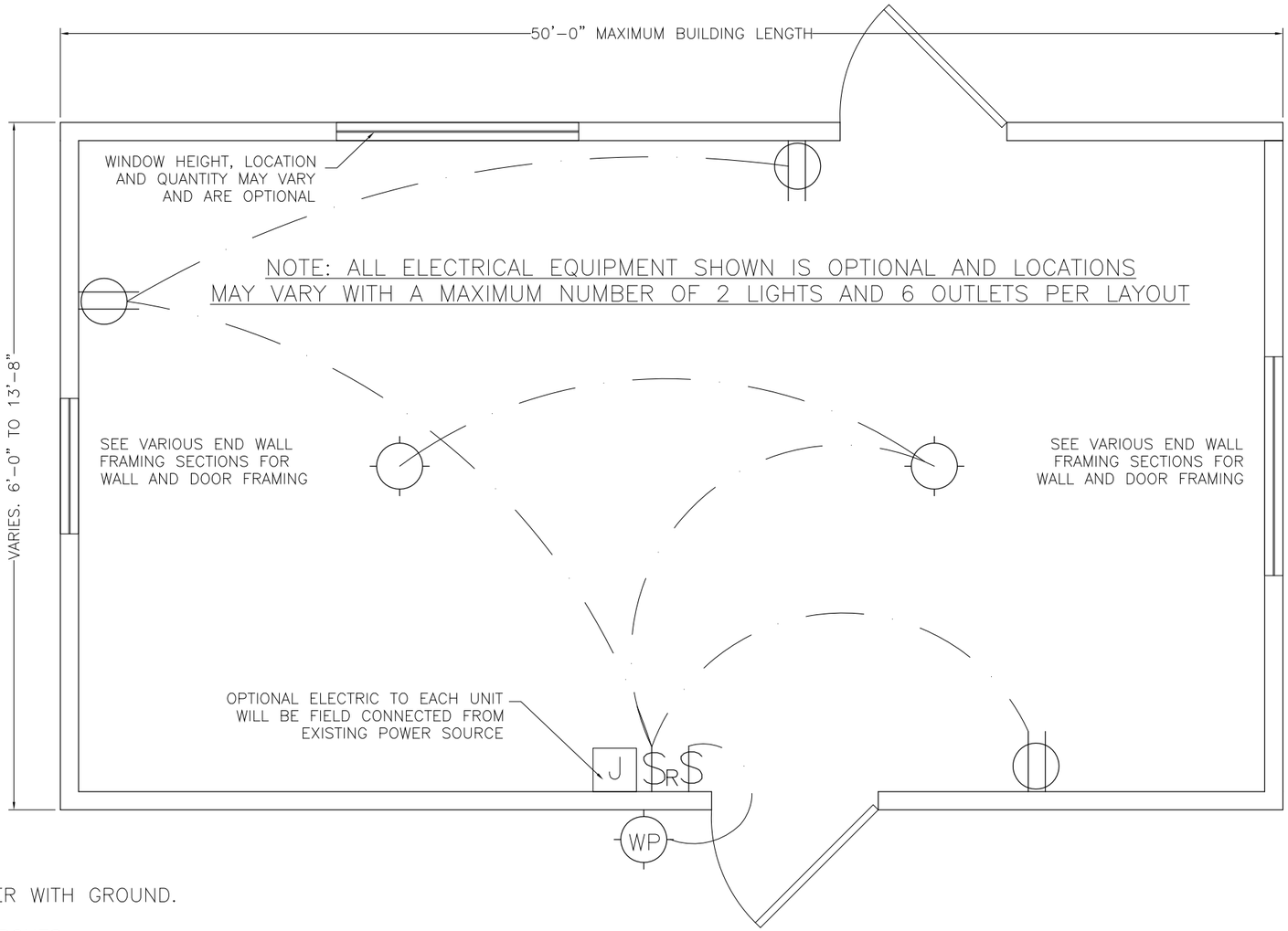

TOP LINE ENGINEERING, LLC
STRUCTURAL ENGINEERS
William E. Neary, III
SMP-51, SMI-79, ICC 5185040
10649 Oakview Pointe Terrace
Gotha, Florida 34734

ELECTRICAL NOTES:

1. ALL WIRE TO BE #12 THHN SOLID COPPER WITH GROUND.
2. FIXTURE LOCATION AND TYPE MAY VARY
3. PLASTIC OR METAL "NEW WORK" OUTLET BOXES
4. 20A GFCI OUTLETS
5. ALL RECEPTACLES TO BE AT 12"–16" A.F.G.; MAXIMUM 8 RECEPTACLES.
6. ALL SWITCHES TO BE AT 48"–52" A.F.G.
7. FLUORESCENT & LED LIGHTS MAY SUBSTITUTE FOR INCANDESCENT LIGHTING
8. ALL OUTLETS TO BE GFCI
9. THE MAIN ELECTRICAL PANEL, FEEDERS, POWER HOOKUP TO UNIT (INCLUDING ALL DISCONNECTS, OVER CURRENT DEVICES, PANELS, GROUNDING, ETC.) IS DESIGNED BY OTHERS, SITE INSTALLED, AND SUBJECT TO LOCAL APPROVAL.

RMT– RIGID METALLIC TUBING

358.30 SECURING AND SUPPORTING. EMT SHALL BE INSTALLED AS A COMPLETE SYSTEM IN ACCORDANCE WITH 300.18 AND SHALL BE SECURELY FASTENED IN PLACE AND SUPPORTED IN ACCORDANCE WITH 358.30 (A) AND (B).
(A) SECURELY FASTENED. EMT SHALL BE SECURELY FASTENED IN PLACE AT LEAST EVERY (10FT). IN ADDITION, EACH EMT RUN BETWEEN TERMINATION POINTS SHALL BE SECURELY FASTENED WITHIN (3 FT) OF EACH OUTLET BOX, JUNCTION BOX, DEVICE BOX, CABINET, CONDUIT BODY, OR OTHER TUBING TERMINATION.
EXCEPTION NO. 1: FASTENING OF UNBROKEN LENGTHS SHALL BE PERMITTED TO BE INCREASED TO A DISTANCE OF (5 FT.) WHERE STRUCTURAL MEMBERS DO NOT READILY PERMIT FASTENING WITHIN (3 FT).

Handi-Houses ©
THEY'RE PORTABLE
P.O. BOX 830
SWAINSBORO, GA 30401
PHONE NUMBER:
(800) 722–6436

CODE INFORMATION	
CODE VERSION	FBC 2020 7th Edition, ASCE-7-16, 2017 NEC
MANUFACTURER	HANDI-HOUSE
BUILDING TYPE	MANUFACTURED BUILDING RESIDENTIAL LAWN STORAGE
CONSTRUCTION TYPE	V-B
FIRE PROTECTION	NONE
FIRE SUPPRESSION SYSTEM	NONE
OCCUPANCY	UTILITY
ALLOWABLE NUMBER OF STORIES	1
BASIC WIND SPEED	Vult-170mph
EXPOSURE	D
ENCLOSURE	ENCLOSED
INTERNAL PRESSURE COEFFICIENT	+/- 0.18
IMPORTANCE FACTOR	1.0
ROOF DEAD LOAD	10PSF
ROOF LIVE LOAD	20PSF OR 300lb POINT LOAD
FLOOR DEAD LOAD	10PSF
FLOOR LIVE LOAD	75/125PSF
"R" RATING OF WALLS, FLOOR, ROOF	N/A
MODULES PER BUILDING	1
HURRICANE PROTECTION USAGE	NO
HURRICANE SHELTER USAGE	NO
SQUARE FOOTAGE	719 SQ.FT. OR LESS

REVISIONS

REV	DESCRIPTON	DATE	BY

Drawn By:	MTB
Date:	12-9-20
Scale:	NTS
Model#:	HH-S-170D

MATTHEW T. BALDWIN LICENSE NO. 64608 STATE OF FLORIDA PROFESSIONAL ENGINEER
1/05/21

Matthew T. Baldwin P.E.
Florida License #64608

TITLE: ELECTRICAL - STEEL SINGLE WIDE

Sheet: FBPR-7 OF 7

2021-01-05 TOP LINE ENGINEERING APPROVAL PLAN # HH-S-170D-20 *** HVHZ APPROVED