DATE 12/09/2005

Columbia County Building Permit

This Permit Expires One Year From the Date of Issue

PERMIT
000023952

APPLICANT MELANIE RODER PHONE 752-2281

ADDRESS 387 SW KEMP COURT LAKE CITY FL 32024

OWNER AARON SIMQUE PHONE 755-0841

ADDRESS 231 SE CAROB GLEN LAKE CITY FL 32055

CONTRACTOR AARON SIMQUE PHONE 755-0841

LOCATION OF PROPERTY 90E, TR ON 100, TR ON CR245, TR ON PLANT STREET, TR ON GOLDIE WAY, TL ON CAROB GLEN, 5TH LOT ON RIGHT

TYPE DEVELOPMENT SFD,UTILITY ESTIMATED COST OF CONSTRUCTION 109450.00

HEATED FLOOR AREA 2189.00 TOTAL AREA 2189.00 HEIGHT .00 STORIES 1

FOUNDATION CONC WALLS FRAMED ROOF PITCH 10/12 FLOOR SLAB

LAND USE & ZONING RSF-2 MAX. HEIGHT 18

Minimum Set Back Requirments: STREET-FRONT 25.00 REAR 15.00 SIDE 10.00

NO. EX.D.U. 0 FLOOD ZONE X PP DEVELOPMENT PERMIT NO.

PARCEL ID 03-4S-17-07570-923 SUBDIVISION SUZANNE

LOT A BLOCK PHASE UNIT TOTAL ACRES 1.04

000000916		RB29003130	Melanie Roder	
Culvert Permit No.	Culvert Waiver	Contractor's License Number	Applicant/Owner/Contractor	
CULVERT	05-1037-N	BK	JH	Y
Driveway Connection	Septic Tank Number	LU & Zoning checked by	Approved for Issuance	New Resident

COMMENTS: ONE FOOT ABOVE THE ROAD, NOC ON FILE

Check # or Cash 51360

FOR BUILDING & ZONING DEPARTMENT ONLY

(footer/Slab)

Temporary Power _____ date/app. by Foundation _____ date/app. by Monolithic _____ date/app. by

Under slab rough-in plumbing _____ date/app. by Slab _____ date/app. by Sheathing/Nailing _____ date/app. by

Framing _____ date/app. by Rough-in plumbing above slab and below wood floor _____ date/app. by

Electrical rough-in _____ date/app. by Heat & Air Duct _____ date/app. by Peri. beam (Lintel) _____ date/app. by

Permanent power _____ date/app. by C.O. Final _____ date/app. by Culvert _____ date/app. by

M/H tie downs, blocking, electricity and plumbing _____ date/app. by Pool _____ date/app. by

Reconnection _____ date/app. by Pump pole _____ date/app. by Utility Pole _____ date/app. by

M/H Pole _____ date/app. by Travel Trailer _____ date/app. by Re-roof _____ date/app. by

BUILDING PERMIT FEE $ 550.00 CERTIFICATION FEE $ 10.95 SURCHARGE FEE $ 10.95

MISC. FEES $ .00 ZONING CERT. FEE $ 50.00 FIRE FEE $ .00 WASTE FEE $

FLOOD DEVELOPMENT FEE $ FLOOD ZONE FEE $ 25.00 CULVERT FEE $ 25.00 **TOTAL FEE** 671.90

INSPECTORS OFFICE _____ CLERKS OFFICE CH

NOTICE: IN ADDITION TO THE REQUIREMENTS OF THIS PERMIT, THERE MAY BE ADDITIONAL RESTRICTIONS APPLICABLE TO THIS PROPERTY THAT MAY BE FOUND IN THE PUBLIC RECORDS OF THIS COUNTY. AND THERE MAY BE ADDITIONAL PERMITS REQUIRED FROM OTHER GOVERNMENTAL ENTITIES SUCH AS WATER MANAGEMENT DISTRICTS, STATE AGENCIES, OR FEDERAL AGENCIES.

"WARNING TO OWNER: YOUR FAILURE TO RECORD A NOTICE OF COMMENCEMENT MAY RESULT IN YOUR PAYING TWICE FOR IMPROVEMENTS TO YOUR PROPERTY. IF YOU INTEND TO OBTAIN FINANCING, CONSULT WITH YOUR LENDER OR AN ATTORNEY BEFORE RECORDING YOUR NOTICE OF COMMENCEMENT."

This Permit Must Be Prominently Posted on Premises During Construction

PLEASE NOTIFY THE COLUMBIA COUNTY BUILDING DEPARTMENT AT LEAST 24 HOURS IN ADVANCE OF EACH INSPECTION, IN ORDER THAT IT MAY BE MADE WITHOUT DELAY OR INCONVIENCE, PHONE 758-1008. THIS PERMIT IS NOT VALID UNLESS THE WORK AUTHORIZED BY IT IS COMMENCED WITHIN 6 MONTHS AFTER ISSUANCE.

The Issuance of this Permit Does Not Waive Compliance by Permittee with Deed Restrictions.

Aaron Simque Parcel 14 671.40 CK# 51360

Columbia County Building Permit Application

Revised 9-23-04

For Office Use Only Application # 0512-02 Date Received 12/2 By JW Permit # 916/23952
Application Approved by - Zoning Official BLK Date 07.12.05 Plans Examiner OK JTH Date 12-8-05
Flood Zone X Per survey Development Permit NA Zoning RSF-2 Land Use Plan Map Category RES. LOW DENS.
Comments

Applicants Name Melanie Roder Phone 752-2281
Address 387 SW Kemp CT Lake City, FL 32024
Owners Name Aaron Simque Homes Phone 755-0841
911 Address 231 SE Carob gln. Lake City, FL 32055
Contractors Name Aaron Simque Homes Phone 755-0841
Address P.O. Box 2183 Lake City, FL 32056
Fee Simple Owner Name & Address NA
Bonding Co. Name & Address NA
Architect/Engineer Name & Address Will Myers Mark Disosway
Mortgage Lenders Name & Address Columbia County Bank
Circle the correct power company - FL Power & Light - Clay Elec. - Suwannee Valley Elec. - Progressive Energy
Property ID Number 03-4S-17-07570-923 (Parcel 'A') Estimated Cost of Construction 70,000
Subdivision Name Lot ____ Block ____ Unit ____ Phase ____
Driving Directions 90 E TR on 100, TR on CR 245, TR on Plant St, TR on Goldie way, ~~TR~~ TL on Carob gln. 5th lot on right.

Type of Construction SFD Number of Existing Dwellings on Property 0
Total Acreage 1.04 Lot Size ____ Do you need a - Culvert Permit or Culvert Waiver or Have an Existing Drive
Actual Distance of Structure from Property Lines - Front 52' Side 63' Side 27'9" Rear 104'4"
Total Building Height 18'5" Number of Stories 1 Heated Floor Area 2189 ~1514 Roof Pitch 6-12
Porches 260 GARAGE 415 Living 1514 TOTAL 2189

Application is hereby made to obtain a permit to do work and installations as indicated. I certify that no work or installation has commenced prior to the issuance of a permit and that all work be performed to meet the standards of all laws regulating construction in this jurisdiction.

OWNERS AFFIDAVIT: I hereby certify that all the foregoing information is accurate and all work will be done in compliance with all applicable laws and regulating construction and zoning.

WARNING TO OWNER: YOUR FAILURE TO RECORD A NOTICE OF COMMENCMENT MAY RESULT IN YOU PAYING TWICE FOR IMPROVEMENTS TO YOUR PROPERTY. IF YOU INTEND TO OBTAIN FINANCING, CONSULT WITH YOUR LENDER OR ATTORNEY BEFORE RECORDING YOUR NOTICE OF COMMENCEMENT.

Linda R. Roder
Commission #DD303275
Expires: Mar 24, 2008
Bonded Thru
Atlantic Bonding Co., Inc.

Owner Builder or Agent (Including Contractor)

Contractor Signature
Contractors License Number RB 29003130
Competency Card Number
NOTARY STAMP/SEAL

STATE OF FLORIDA
COUNTY OF COLUMBIA

Sworn to (or affirmed) and subscribed before me
this 31st day of October 20 05.
Personally known ____ or Produced Identification ____

Linda Roder
Notary Signature

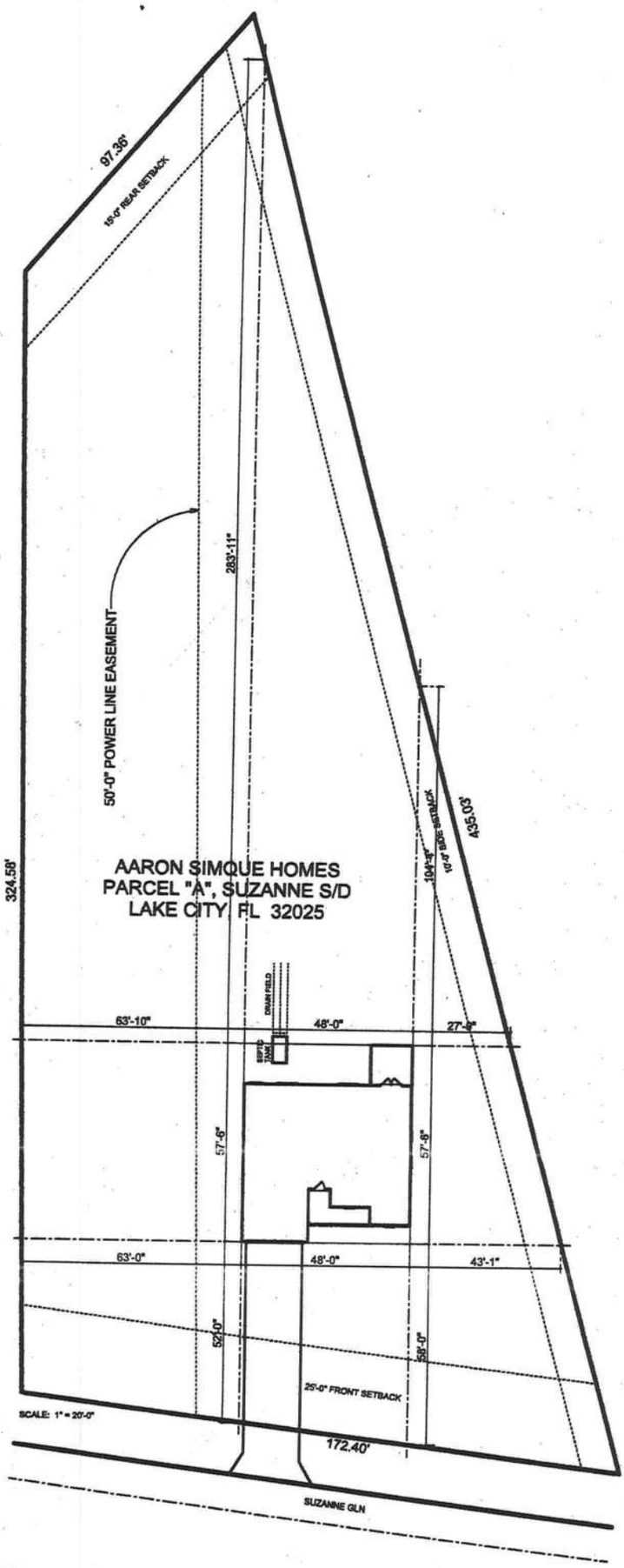
97.36'
15'-0" REAR SETBACK
283'-11"
50'-0" POWER LINE EASEMENT
324.58'
AARON SIMQUE HOMES
PARCEL "A", SUZANNE S/D
LAKE CITY, FL 32025
104'-4"
10'-0" SIDE SETBACK
435.03'
DRAIN FIELD
SEPTIC TANK
63'-10"
48'-0"
27'-4"
57'-6"
57'-6"
63'-0"
48'-0"
43'-1"
52'-0"
58'-0"
25'-0" FRONT SETBACK
SCALE: 1" = 20'-0"
172.40'
SUZANNE GLN

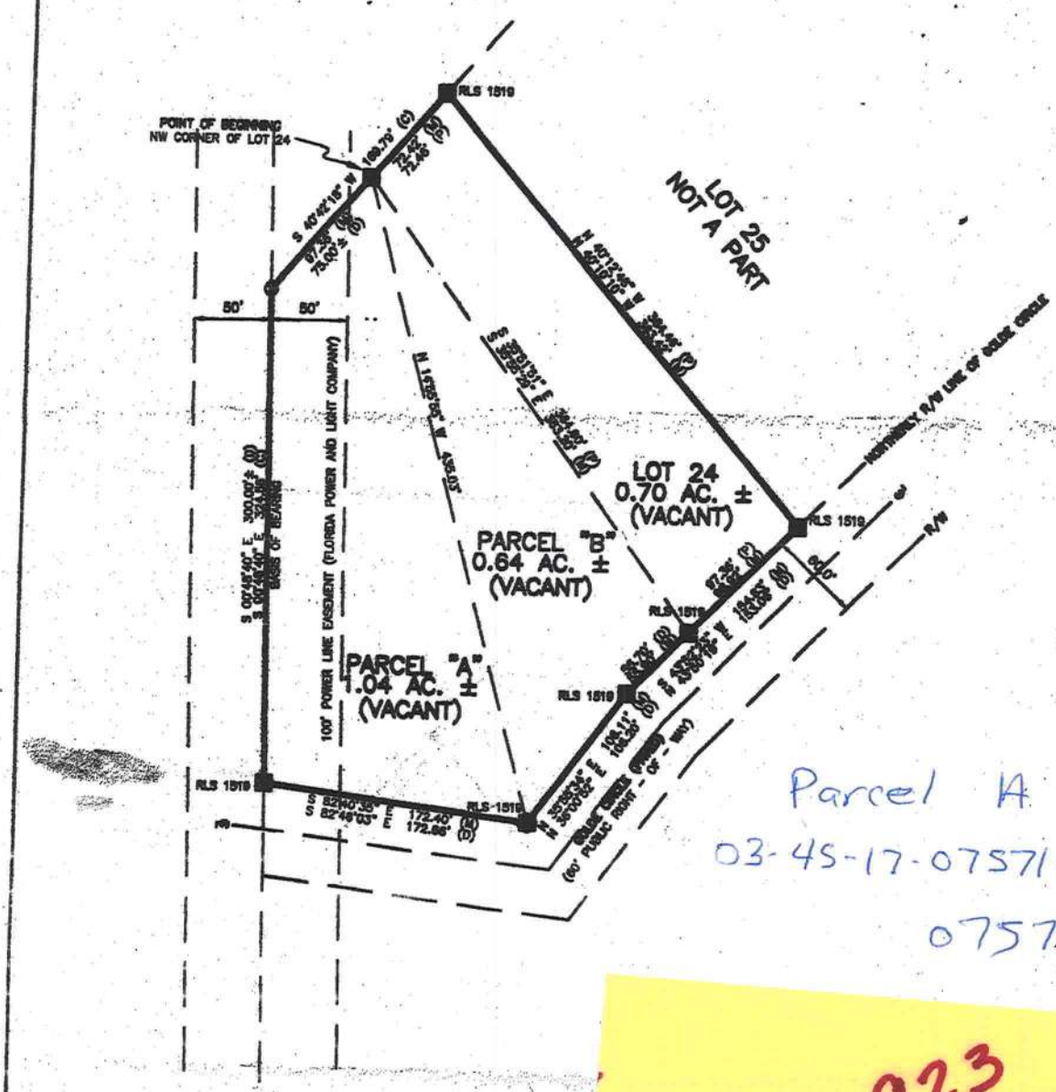

PARCEL "A"

BEGIN AT THE NOR
SUZANNE SUBDIVIS
4 PAGE 91, COLUM
S 40°43'02" W, 97.
OF OF THE NORTHE
RUN S 00°48'40" E
NORTH RIGHT-OF-
82°40'35" E ALONG
THENCE N 14°55'55
BEGINNING. SUBJEC
WEST 50 FEET THE

PARCEL "B"

BEGIN AT THE NOR
SUZANNE SUBDIVISI
BOOK 4, PAGE 91,
RUN THENCE S 14°
RIGHT-OF-WAY OF
E, ALONG SAID RIG
THENCE CONTINUE
43°50'19" E, 55.70
LINE OF SAID LOT
SAID WESTERLY LIN
BEGINNING.

Parcel A
03-45-17-07571-000
07570-

07570-923

NOTES:

1. BEARINGS ARE BASED ON THE WEST LINE OF S
2. SUBJECT PROPERTY LIES IN ZONE "X", AN ARE
FLOOD INSURANCE RATE MAP COMMUNITY PAN
1988. FLOOD ZONE LINES, IF ANY, ARE SCALE
NUARY 6,
D BY FEMA.
3. ONLY THOSE VISIBLE INTERIOR IMPROVEMENTS
HAVE BEEN LOCATED AS SHOWN HEREON. EXC
AND OTHER IMPROVEMENTS NOT VISIBLE OR K
PROPERTY
ILITIES
4. THIS SURVEY WAS PREPARED WITHOUT THE BE
EXCEPTION IS MADE HEREIN REGARDING EASE
EFORE,
CORD NOT
PROVIDED BY THE CLIENT.
5. CLOSURE EXCEEDS 1 : 10,000.
6. SCALE AND GRAPHIC LOCATION OF FENCES AND UTILITY POLES, IF ANY, MAY BE EXAGGERATED FOR CLARITY.

Inst:2005022386 Date:09/13/2005 Time:16:17
Doc Stamp-Deed : 420.00
DC,P.DeWitt Cason,Columbia County B:1058 P:432

Corporate Warranty Deed

This Indenture, made , September 12, 2005 A.D.
Between
Venture Capital Elite, Inc. whose post office address is: 5731 NW 60th Street, Parkland, Fl. 33067 a corporation existing under the laws of the State of Florida, Grantor

and Aaron Sinque Homes, Inc. whose post office address is: Post Office Box 2183, Lake City, Fl. 32056, Grantee,

Witnesseth, that the said Grantor, for and in consideration of the sum of Ten and No/100 Dollars ($10.00), to it in hand paid by the said Grantee, the receipt whereof is hereby acknowledged, has granted, bargained and sold to the said Grantee forever, the following described land, situate, lying and being in the County of Columbia, State of Florida, to wit:

See Exhibit "A" Attached Hereto And By This Reference Made A Part Hereof

Subject to taxes for the current year, covenants, restrictions and easements of record, if any.

Parcel Identification Number: R07570-024

And the said Grantor does hereby fully warrant the title to said land, and will defend the same against the lawful claims of all persons whomsoever.

In Witness Whereof, the said Grantor has caused this instrument to be executed in its name by its duly authorized officer and caused its corporate seal to be affixed the day and year first above written.

Venture Capital Elite, Inc.

Signed and Sealed in Our Presence:

By: _____
William Wilson
Its: President

Witness Print Name MARLON EDWARDS

Witness Print Name Anthony Malcolm

(Corporate Seal)

State of FLORIDA
County of BROWARD

The foregoing instrument was acknowledged before me this 9th day of September, 2005, by William Wilson, the President of Venture Capital Elite, Inc. A corporation existing under the laws of the State of Florida, on behalf of the corporation.
He/She is personally known to me or has produced _____ as identification.

_____ (Seal)
Notary Public
Notary Printed Name: Shelleon King

My Commission Expires: 1/11/2009

Notary Public State of Florida
Shelleon King
My Commission CC385327
Expires 01/11/2009

Prepared by:
Lyndi Skinner/Elaine R. Davis, an employee of
American Title Services of Lake City, Inc.,
330 SW Main Boulevard
Lake City, Florida 32025
File Number: 05-643

COLUMBIA COUNTY, FLORIDA CLERK CIRCUIT COURT

STATE OF FLORIDA, COUNTY OF COLUMBIA
I HEREBY CERTIFY, that the above and foregoing is a true copy of the original filed in this office
P. DeWITT CASON, CLERK OF COURTS
By _____ Deputy Clerk
Date 9/29/05

Closer's Choice Florida Corporate Deed/Letter

EXHIBIT "A"

Parcel 1:

LOT 24 IN SUZANNE SUBDIVISION UNIT 1, AS RECORDED IN PLAT BOOK 4, PAGE 91, COLUMBIA COUNTY, FLORIDA.

AND

Parcel 2:

TOWNSHIP 4 SOUTH-RANGE 17 EAST

SECTION 3: Begin at the Northwest Corner of Lot 24 of Suzanne Subdivision Unit 1, as recorded in Plat Book 4, Page 91, Columbia County, Florida and run thence S 40°43'02" W, 97.36 feet to the West boundary line of the Northeast 1/4 of said Section 3; thence run S 00°48'40" E, 300.00 feet more or less to the North right of way line of Golde Circle; thence S 82°40'35" E, along said right of way line 175.66 feet; N 14°55'55" W, 435.03 feet to the Point of Beginning.

AND

Parcel 3:

TOWNSHIP 4 SOUTH-RANDE 17 EAST

SECTION 3: Being at the Northwest Corner of Lot 24 of Suzanne Subdivision Unit 1, as recorded in Plat Book 4, Page 91, Columbia County, Florida and run thence S 14°55'55" E, 435.03 feet to the North right of way of Golde Circle; thence N 36°00'52" E, along said right of way line 106.20 feet; thence continue along said right of way N 43°50'19" E, 55.70 feet to the Westerly boundary line of said Lot 24: thence N 35°51'51" W, along said Westerly line 364.60 feet to the Point of Beginning.

Inst:200502286 Date:09/13/2005 Time:16:17
Doc Stamp-Deed : 420.00
_____DC,P.DeWitt Cason,Columbia County B:1058 P:433

THIS INSTRUMENT PREPARED BY
& RETURN TO:
Columbia County Bank
Linda Evans
173 NW Hillsboro Street
Lake City, FL 32055
REC: $

Inst:2005022346 Date:09/13/2005 Time:12:28
DC,P.DeWitt Cason,Columbia County B:1058 P:286

NOTICE OF COMMENCEMENT

THE UNDERSIGNED hereby gives notice that improvement will be made to certain real property, and in accordance with Chapter 713, Florida Statutes, the following information is provided in this Notice of Commencement:

1. Description of Property: Unplatted Lot adjacent to #24 Suzanne Subdivision, SE Carob Glen Parcel #3

2. General Description of Improvements: Approx. 1,500 square foot single family residence

3. Owner Information: Aaron Simque Homes, Inc.
P.O. Box 2183
Lake City, FL 32056

Owner's Interest in Property: Fee Simple

4. Contractor: Aaron Simque Homes, Inc.
P.O.Box 2183
Lake City, FL 32056

5. Lender: Columbia County Bank
173 NW Hillsboro Street
Lake City, FL 32055

6. Additional persons within the State of Florida designated by Owner upon whom notices or other documents may be served as provided by Section 713.13(1)(a)7., Florida Statutes:

7. Expiration date of Notice of Commencement is one (1) year from the date of recording.

Aaron Simque Homes, Inc.

Aaron Simque, President

STATE OF FLORIDA}
COUNTY OF Columbia}

The foregoing instrument was acknowledged before me this 13 day of ~~August~~ September, 2005 by Aaron Simque as President of Aaron Simque Homes, Inc.

NOTARY PUBLIC

F. VONCILE DOW
MY COMMISSION # DD 154929
EXPIRES: October 3, 2006
Bonded Thru Notary Public Underwriters

Name:
State of Florida at Large (SEAL)
Personally Known: ✓
Produced Identification:
Type:
My Commission Expires:

(NOC)

Application for Onsite Sewage Disposal System Construction Permit. Part II Site Plan

Permit Application Number: 05-1037N

ALL CHANGES MUST BE APPROVED BY THE COUNTY HEALTH UNIT

SIMQUE/CR 05-3125

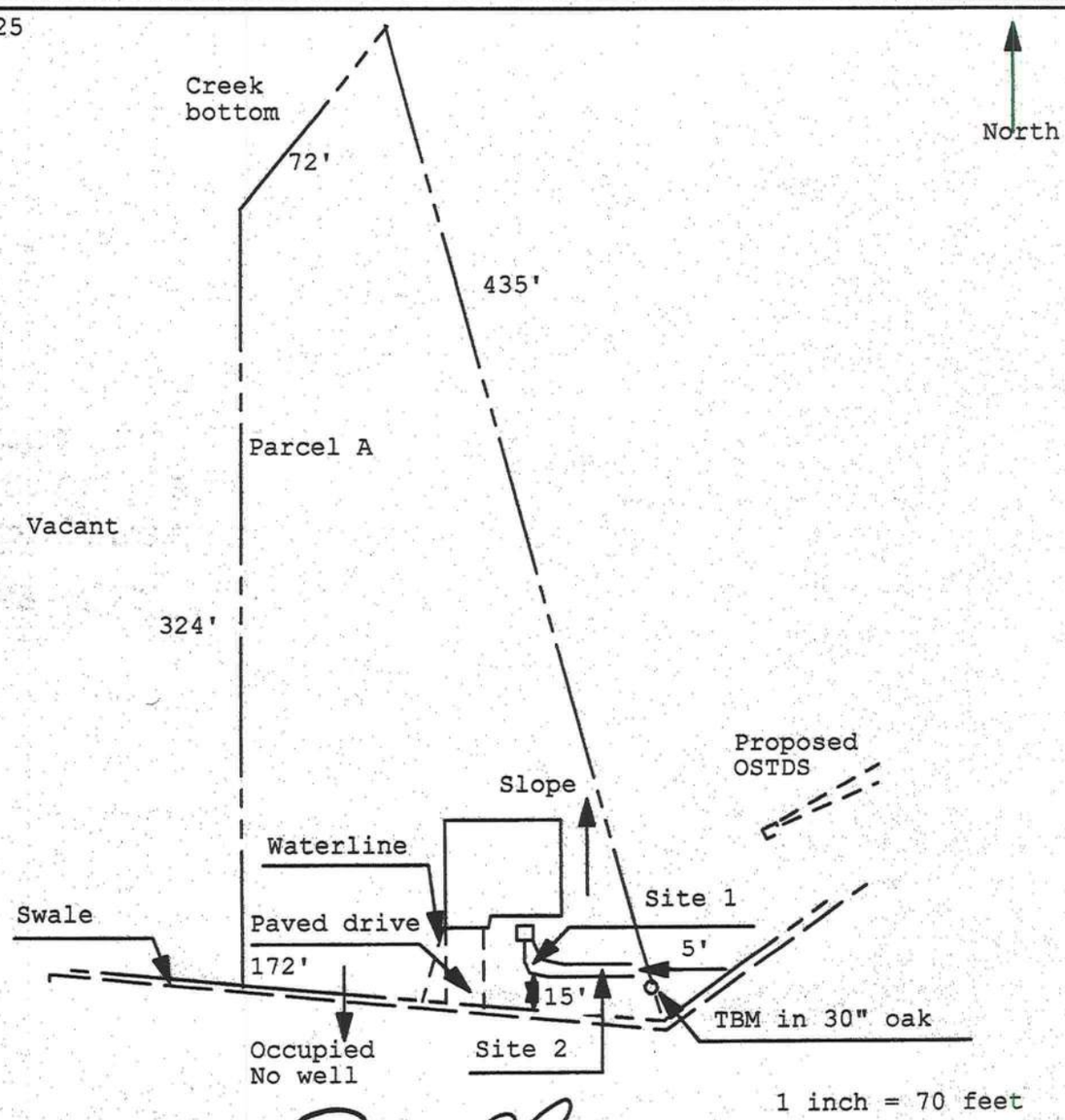

Site Plan Submitted By Paul Lloyd **Date** 10/13/05

Plan Approved ✓ **Not Approved** ____ **Date** 10/14/05

By Mr Orr Columbia **CPHU**

Notes:

FORM 600A-2001

FLORIDA ENERGY EFFICIENCY CODE FOR BUILDING CONSTRUCTION

Florida Department of Community Affairs

Residential Whole Building Performance Method A

Project Name:	Aaron Simque Homes - Hip Spec	Builder:	Aaron Simque Homes
Address:	SE Carob Gln, Suzanne Sub.	Permitting Office:	Columbia
City, State:	Lake City, Fl 32025-	Permit Number:	23952
Owner:	Spec House	Jurisdiction Number:	221000
Climate Zone:	North		

1. New construction or existing	New	
2. Single family or multi-family	Single family	
3. Number of units, if multi-family	1	
4. Number of Bedrooms	3	
5. Is this a worst case?	No	
6. Conditioned floor area (ft²)	1514 ft²	
7. Glass area & type		
a. Clear - single pane	0.0 ft²	
b. Clear - double pane	172.0 ft²	
c. Tint/other SHGC - single pane	0.0 ft²	
d. Tint/other SHGC - double pane	0.0 ft²	
8. Floor types		
a. Slab-On-Grade Edge Insulation	R=0.0, 178.0(p) ft	
b. N/A		
c. N/A		
9. Wall types		
a. Frame, Wood, Exterior	R=13.0, 824.0 ft²	
b. Frame, Wood, Adjacent	R=13.0, 150.0 ft²	
c. N/A		
d. N/A		
e. N/A		
10. Ceiling types		
a. Under Attic	R=30.0, 1585.0 ft²	
b. N/A		
c. N/A		
11. Ducts		
a. Sup: Unc. Ret: Unc. AH: Garage	Sup. R=6.0, 35.0 ft	
b. N/A		
12. Cooling systems		
a. Central Unit	Cap: 28.0 kBtu/hr	
	SEER: 11.00	
b. N/A		
c. N/A		
13. Heating systems		
a. Electric Heat Pump	Cap: 28.0 kBtu/hr	
	HSPF: 6.80	
b. N/A		
c. N/A		
14. Hot water systems		
a. Electric Resistance	Cap: 40.0 gallons	
	EF: 0.90	
b. N/A		
c. Conservation credits (HR-Heat recovery, Solar DHP-Dedicated heat pump)		
15. HVAC credits (CF-Ceiling fan, CV-Cross ventilation, HF-Whole house fan, PT-Programmable Thermostat, MZ-C-Multizone cooling, MZ-H-Multizone heating)		

Glass/Floor Area: 0.11

Total as-built points: 21570
Total base points: 23278

PASS

I hereby certify that the plans and specifications covered by this calculation are in compliance with the Florida Energy Code.

PREPARED BY: Will Myers

DATE: 09/06/05

I hereby certify that this building, as designed, is in compliance with the Florida Energy Code.

OWNER/AGENT: _____

DATE: _____

Review of the plans and specifications covered by this calculation indicates compliance with the Florida Energy Code. Before construction is completed this building will be inspected for compliance with Section 553.908 Florida Statutes.

GREAT SEAL OF THE STATE OF FLORIDA
IN GOD WE TRUST

BUILDING OFFICIAL: _____

DATE: _____

FORM 600A-2001

SUMMER CALCULATIONS

Residential Whole Building Performance Method A - Details

ADDRESS: **SE Carob Gln, Suzanne Sub., Lake City, Fl, 32025-** PERMIT #:

BASE

GLASS TYPES .18 X Conditioned Floor Area	X BSPM	= Points
.18 1514.0	20.04	5461.3

WALL TYPES	Area X	BSPM =	Points
Adjacent	150.0	0.70	105.0
Exterior	824.0	1.70	1400.8
Base Total:	**974.0**		**1505.8**

DOOR TYPES	Area X	BSPM =	Points
Adjacent	18.0	2.40	43.2
Exterior	20.0	6.10	122.0
Base Total:	**38.0**		**165.2**

CEILING TYPES	Area X	BSPM =	Points
Under Attic	1514.0	1.73	2619.2
Base Total:	**1514.0**		**2619.2**

FLOOR TYPES	Area X	BSPM =	Points
Slab	178.0(p)	-37.0	-6586.0
Raised	0.0	0.00	0.0
Base Total:			**-6586.0**

INFILTRATION	Area X	BSPM =	Points
	1514.0	10.21	15457.9

AS-BUILT

Type/SC	Overhang Ornt	Len	Hgt	Area X	SPM X	SOF =	Points
Double, Clear	W	13.5	7.7	40.0	36.99	0.42	622.1
Double, Clear	W	1.5	6.0	60.0	36.99	0.91	2026.9
Double, Clear	W	1.5	2.0	4.0	36.99	0.60	89.1
Double, Clear	E	11.5	7.7	22.0	40.22	0.43	383.1
Double, Clear	E	6.5	6.0	15.0	40.22	0.50	299.9
Double, Clear	E	1.5	6.0	15.0	40.22	0.91	550.7
Double, Clear	S	1.5	2.0	4.0	34.50	0.57	78.0
Double, Clear	S	1.5	5.0	12.0	34.50	0.81	334.0
As-Built Total:				**172.0**			**4383.8**

Type	R-Value	Area X	SPM =	Points
Frame, Wood, Exterior	13.0	824.0	1.50	1236.0
Frame, Wood, Adjacent	13.0	150.0	0.60	90.0
As-Built Total:		**974.0**		**1326.0**

Type	Area X	SPM =	Points
Exterior Insulated	20.0	4.10	82.0
Adjacent Insulated	18.0	1.60	28.8
As-Built Total:	**38.0**		**110.8**

Type	R-Value	Area X	SPM X SCM =	Points
Under Attic	30.0	1585.0	1.73 X 1.00	2742.1
As-Built Total:		**1585.0**		**2742.1**

Type	R-Value	Area X	SPM =	Points
Slab-On-Grade Edge Insulation	0.0	178.0(p	-41.20	-7333.6
As-Built Total:		**178.0**		**-7333.6**

Area X	SPM =	Points
1514.0	10.21	15457.9

FORM 600A-2001

SUMMER CALCULATIONS

Residential Whole Building Performance Method A - Details

ADDRESS: **SE Carob Gln, Suzanne Sub., Lake City, Fl, 32025-** PERMIT #:

BASE				AS-BUILT							
Summer Base Points:			**18623.5**	**Summer As-Built Points:**							**16687.0**
Total Summer Points	X	System Multiplier	= Cooling Points	Total Component	X	Cap Ratio	X Duct Multiplier (DM x DSM x AHU)	X System Multiplier	X Credit Multiplier	=	Cooling Points
18623.5		**0.4266**	**7944.8**	16687.0 **16687.0**		1.000 **1.00**	(1.090 x 1.147 x 1.00) **1.250**	0.310 **0.310**	1.000 **1.000**		6473.1 **6473.1**

FORM 600A-2001

WINTER CALCULATIONS

Residential Whole Building Performance Method A - Details

ADDRESS: **SE Carob Gln, Suzanne Sub., Lake City, Fl, 32025-** PERMIT #:

BASE

GLASS TYPES

.18 X	Conditioned Floor Area	X BWPM	= Points
.18	1514.0	12.74	3471.9

WALL TYPES	Area	X BWPM	= Points
Adjacent	150.0	3.60	540.0
Exterior	824.0	3.70	3048.8
Base Total:	**974.0**		**3588.8**

DOOR TYPES	Area	X BWPM	= Points
Adjacent	18.0	11.50	207.0
Exterior	20.0	12.30	246.0
Base Total:	**38.0**		**453.0**

CEILING TYPES	Area	X BWPM	= Points
Under Attic	1514.0	2.05	3103.7
Base Total:	**1514.0**		**3103.7**

FLOOR TYPES	Area	X BWPM	= Points
Slab	178.0(p)	8.9	1584.2
Raised	0.0	0.00	0.0
Base Total:			**1584.2**

INFILTRATION	Area	X BWPM	= Points
	1514.0	-0.59	-893.3

AS-BUILT

Type/SC	Overhang Ornt	Len	Hgt	Area	X WPM	X WOF	= Points
Double, Clear	W	13.5	7.7	40.0	10.77	1.22	524.2
Double, Clear	W	1.5	6.0	60.0	10.77	1.02	661.1
Double, Clear	W	1.5	2.0	4.0	10.77	1.13	48.9
Double, Clear	E	11.5	7.7	22.0	9.09	1.39	278.0
Double, Clear	E	6.5	6.0	15.0	9.09	1.31	178.4
Double, Clear	E	1.5	6.0	15.0	9.09	1.04	141.2
Double, Clear	S	1.5	2.0	4.0	4.03	2.27	36.5
Double, Clear	S	1.5	5.0	12.0	4.03	1.20	57.9
As-Built Total:				**172.0**			**1926.2**

Type	R-Value	Area	X WPM	= Points
Frame, Wood, Exterior	13.0	824.0	3.40	2801.6
Frame, Wood, Adjacent	13.0	150.0	3.30	495.0
As-Built Total:		**974.0**		**3296.6**

Type	Area	X WPM	= Points
Exterior Insulated	20.0	8.40	168.0
Adjacent Insulated	18.0	8.00	144.0
As-Built Total:	**38.0**		**312.0**

Type	R-Value	Area	X WPM	X WCM	= Points
Under Attic	30.0	1585.0	2.05	X 1.00	3249.3
As-Built Total:		**1585.0**			**3249.3**

Type	R-Value	Area	X WPM	= Points
Slab-On-Grade Edge Insulation	0.0	178.0(p	18.80	3346.4
As-Built Total:		**178.0**		**3346.4**

Area	X WPM	= Points
1514.0	-0.59	-893.3

FORM 600A-2001

WINTER CALCULATIONS

Residential Whole Building Performance Method A - Details

ADDRESS: **SE Carob Gln, Suzanne Sub., Lake City, Fl, 32025-** PERMIT #:

BASE				AS-BUILT								
Winter Base Points:			**11308.3**	**Winter As-Built Points:**								**11237.2**
Total Winter Points	X	System Multiplier	= Heating Points	Total Component	X	Cap Ratio	X	Duct Multiplier (DM x DSM x AHU)	X	System Multiplier	X	Credit Multiplier	= Heating Points
11308.3		**0.6274**	**7094.9**	11237.2 **11237.2**		1.000 **1.00**		(1.069 x 1.169 x 1.00) **1.250**		0.501 **0.501**		1.000 **1.000**	7042.0 **7042.0**

FORM 600A-2001

WATER HEATING & CODE COMPLIANCE STATUS

Residential Whole Building Performance Method A - Details

ADDRESS: **SE Carob Gln, Suzanne Sub., Lake City, Fl, 32025-** PERMIT #:

BASE					AS-BUILT							
WATER HEATING												
Number of Bedrooms	X	Multiplier	=	Total	Tank Volume	EF	Number of Bedrooms	X	Tank Ratio	X Multiplier	X Credit Multiplier	= Total
3		2746.00		8238.0	40.0	0.90	3		1.00	2684.98	1.00	8054.9
					As-Built Total:							**8054.9**

CODE COMPLIANCE STATUS

BASE				AS-BUILT			
Cooling Points +	Heating Points +	Hot Water Points =	Total Points	Cooling Points +	Heating Points +	Hot Water Points =	Total Points
7945	**7095**	**8238**	**23278**	**6473**	**7042**	**8055**	**21570**

PASS

FORM 600A-2001

Code Compliance Checklist

Residential Whole Building Performance Method A - Details

ADDRESS: **SE Carob Gln, Suzanne Sub., Lake City, Fl, 32025-** PERMIT #:

6A-21 INFILTRATION REDUCTION COMPLIANCE CHECKLIST

COMPONENTS	SECTION	REQUIREMENTS FOR EACH PRACTICE	CHECK
Exterior Windows & Doors	606.1.ABC.1.1	Maximum:.3 cfm/sq.ft. window area; .5 cfm/sq.ft. door area.	
Exterior & Adjacent Walls	606.1.ABC.1.2.1	Caulk, gasket, weatherstrip or seal between: windows/doors & frames, surrounding wall; foundation & wall sole or sill plate; joints between exterior wall panels at corners; utility penetrations; between wall panels & top/bottom plates; between walls and floor. EXCEPTION: Frame walls where a continuous infiltration barrier is installed that extends from, and is sealed to, the foundation to the top plate.	
Floors	606.1.ABC.1.2.2	Penetrations/openings >1/8" sealed unless backed by truss or joint members. EXCEPTION: Frame floors where a continuous infiltration barrier is installed that is sealed to the perimeter, penetrations and seams.	
Ceilings	606.1.ABC.1.2.3	Between walls & ceilings; penetrations of ceiling plane of top floor; around shafts, chases, soffits, chimneys, cabinets sealed to continuous air barrier; gaps in gyp board & top plate; attic access. EXCEPTION: Frame ceilings where a continuous infiltration barrier is installed that is sealed at the perimeter, at penetrations and seams.	
Recessed Lighting Fixtures	606.1.ABC.1.2.4	Type IC rated with no penetrations, sealed; or Type IC or non-IC rated, installed inside a sealed box with 1/2" clearance & 3" from insulation; or Type IC rated with < 2.0 cfm from conditioned space, tested.	
Multi-story Houses	606.1.ABC.1.2.5	Air barrier on perimeter of floor cavity between floors.	
Additional Infiltration reqts	606.1.ABC.1.3	Exhaust fans vented to outdoors, dampers; combustion space heaters comply with NFPA, have combustion air.	

6A-22 OTHER PRESCRIPTIVE MEASURES (must be met or exceeded by all residences.)

COMPONENTS	SECTION	REQUIREMENTS	CHECK
Water Heaters	612.1	Comply with efficiency requirements in Table 6-12. Switch or clearly marked circuit breaker (electric) or cutoff (gas) must be provided. External or built-in heat trap required.	
Swimming Pools & Spas	612.1	Spas & heated pools must have covers (except solar heated). Non-commercial pools must have a pump timer. Gas spa & pool heaters must have a minimum thermal efficiency of 78%.	
Shower heads	612.1	Water flow must be restricted to no more than 2.5 gallons per minute at 80 PSIG.	
Air Distribution Systems	610.1	All ducts, fittings, mechanical equipment and plenum chambers shall be mechanically attached, sealed, insulated, and installed in accordance with the criteria of Section 610. Ducts in unconditioned attics: R-6 min. insulation.	
HVAC Controls	607.1	Separate readily accessible manual or automatic thermostat for each system.	
Insulation	604.1, 602.1	Ceilings-Min. R-19. Common walls-Frame R-11 or CBS R-3 both sides. Common ceiling & floors R-11.	

ENERGY PERFORMANCE LEVEL (EPL) DISPLAY CARD

ESTIMATED ENERGY PERFORMANCE SCORE* = 84.3

The higher the score, the more efficient the home.

Spec House, SE Carob Gln, Suzanne Sub., Lake City, Fl, 32025-

1. New construction or existing	New	
2. Single family or multi-family	Single family	
3. Number of units, if multi-family	1	
4. Number of Bedrooms	3	
5. Is this a worst case?	No	
6. Conditioned floor area (ft²)	1514 ft²	
7. Glass area & type		
a. Clear - single pane	0.0 ft²	
b. Clear - double pane	172.0 ft²	
c. Tint/other SHGC - single pane	0.0 ft²	
d. Tint/other SHGC - double pane	0.0 ft²	
8. Floor types		
a. Slab-On-Grade Edge Insulation	R=0.0, 178.0(p) ft	
b. N/A		
c. N/A		
9. Wall types		
a. Frame, Wood, Exterior	R=13.0, 824.0 ft²	
b. Frame, Wood, Adjacent	R=13.0, 150.0 ft²	
c. N/A		
d. N/A		
e. N/A		
10. Ceiling types		
a. Under Attic	R=30.0, 1585.0 ft²	
b. N/A		
c. N/A		
11. Ducts		
a. Sup: Unc. Ret: Unc. AH: Garage	Sup. R=6.0, 35.0 ft	
b. N/A		
12. Cooling systems		
a. Central Unit	Cap: 28.0 kBtu/hr	
	SEER: 11.00	
b. N/A		
c. N/A		
13. Heating systems		
a. Electric Heat Pump	Cap: 28.0 kBtu/hr	
	HSPF: 6.80	
b. N/A		
c. N/A		
14. Hot water systems		
a. Electric Resistance	Cap: 40.0 gallons	
	EF: 0.90	
b. N/A		
c. Conservation credits (HR-Heat recovery, Solar DHP-Dedicated heat pump)		
15. HVAC credits (CF-Ceiling fan, CV-Cross ventilation, HF-Whole house fan, PT-Programmable Thermostat, MZ-C-Multizone cooling, MZ-H-Multizone heating)		

I certify that this home has complied with the Florida Energy Efficiency Code For Building Construction through the above energy saving features which will be installed (or exceeded) in this home before final inspection. Otherwise, a new EPL Display Card will be completed based on installed Code compliant features.

Builder Signature: _____ Date: _____

Address of New Home: _____ City/FL Zip: _____

**NOTE: The home's estimated energy performance score is only available through the FLA/RES computer program. This is not a Building Energy Rating. If your score is 80 or greater (or 86 for a US EPA/DOE EnergyStar™ designation), your home may qualify for energy efficiency mortgage (EEM) incentives if you obtain a Florida Energy Gauge Rating. Contact the Energy Gauge Hotline at 321/638-1492 or see the Energy Gauge web site at www.fsec.ucf.edu for information and a list of certified Raters. For information about Florida's Energy Efficiency Code For Building Construction, contact the Department of Community Affairs at 850/488-1824.*

EnergyGauge® (Version: FLR1PB v3.22)

AH: Wayne

Columbia County Building Department
Culvert Waiver

Culvert Waiver No.
000000916

DATE: 04/03/2006 BUILDING PERMIT NO. 23852

APPLICANT MELANIE RODER PHONE 752-3281

ADDRESS 387 SW KEMP COURT LAKE CITY FL 32024

OWNER AARON SIMQUE PHONE 755-0841

ADDRESS 231 SE CAROB GLEN LAKE CITY FL 32055

CONTRACTOR AARON SIMQUE PHONE 755-0841

LOCATION OF PROPERTY 90E, TR ON 100, TR ON CR245, TR ON LANT ST, TR ON GOLDIE WAY, TL ON CAROB GLEN, 5TH LOT ON RIGHT

SUBDIVISION/LOT/BLOCK/PHASE/UNIT SUZANNE A

PARCEL ID # 03-4S-17-07570-923

I HEREBY CERTIFY THAT I UNDERSTAND AND WILL FULLY COMPLY WITH THE DECISION OF THE COLUMBIA COUNTY PUBLIC WORKS DEPARTMENT IN CONNECTION WITH THE HEREIN PROPOSED APPLICATION.

SIGNATURE:

A SEPARATE CHECK IS REQUIRED
MAKE CHECKS PAYABLE TO BCC

Amount Paid 50.00

PUBLIC WORKS DEPARTMENT USE ONLY

I HEREBY CERTIFY THAT I HAVE EXAMINED THIS APPLICATION AND DETERMINED THAT THE CULVERT WAIVER IS:

APPROVED ✓ NOT APPROVED - NEEDS A CULVERT PERMIT

COMMENTS: Needs Culvert - 50' Ditches Don't Restrict water Flow

SIGNED: Ken Scott DATE: 04-05-06

RECEIVED
APR 04 2006
BY:

ANY QUESTIONS PLEASE CONTACT THE PUBLIC WORKS DEPARTMENT AT 386-752-5955.

135 NE Hernando Ave., Suite B-21
Lake City, FL 32055
Phone: 386-758-1008 Fax: 386-758-2160

COLUMBIA COUNTY GATEWAY TO FLORIDA

23852

Columbia County Building Department
Culvert Permit

Culvert Permit No.
000000916

DATE 12/09/2005 PARCEL ID # 03-4S-17-07570-923

APPLICANT MELANIE RODER PHONE 752-3281

ADDRESS 387 SW KEMP COURT LAKE CITY FL 32024

OWNER AARON SIMQUE PHONE 755-0841

ADDRESS 231 SE CAROB GLEN LAKE CITY FL 32055

CONTRACTOR AARON SIMQUE PHONE 755-0841

LOCATION OF PROPERTY 90E, TR ON 100, TR ON CR245, TR ON LANT ST, TR ON GOLDIE WAY, TL ON CAROB GLEN, 5TH LOT ON RIGHT

SUBDIVISION/LOT/BLOCK/PHASE/UNIT SUZANNE A

SIGNATURE Melanie Roder

INSTALLATION REQUIREMENTS

[X] Culvert size will be 18 inches in diameter with a total lenght of 32 feet, leaving 24 feet of driving surface. Both ends will be mitered 4 foot with a 4 : 1 slope and poured with a 4 inch thick reinforced concrete slab.

INSTALLATION NOTE: Turnouts will be required as follows:
a) a majority of the current and existing driveway turnouts are paved, or;
b) the driveway to be served will be paved or formed with concrete.
Turnouts shall be concrete or paved a minimum of 12 feet wide or the width of the concrete or paved driveway, whichever is greater. The width shall conform to the current and existing paved or concreted turnouts.

[ ] Culvert installation shall conform to the approved site plan standards.

[ ] Department of Transportation Permit installation approved standards.

[ ] Other _____

ALL PROPER SAFETY REQUIREMENTS SHOULD BE FOLLOWED DURING THE INSTALATION OF THE CULVERT.

135 NE Hernando Ave., Suite B-21
Lake City, FL 32055
Phone: 386-758-1008 Fax: 386-758-2160

Amount Paid 25.00

COLUMBIA COUNTY · GATEWAY TO FLORIDA

Residential System Sizing Calculation

Summary

Spec House
SE Carob Gln, Suzanne Sub.
Lake City, Fl 32025-

Project Title:
Aaron Simque Homes - Hip Spec

Class 3 Rating
Registration No. 0
Climate: North

9/6/2005

Location for weather data: Gainesville - User customized: Latitude(29) Temp Range(M)			
Humidity data: Interior RH (50%) Outdoor wet bulb (78F) Humidity difference(51gr.)			
Winter design temperature	31 F	Summer design temperature	99 F
Winter setpoint	70 F	Summer setpoint	75 F
Winter temperature difference	39 F	Summer temperature difference	24 F
Total heating load calculation	**23966 Btuh**	**Total cooling load calculation**	**27570 Btuh**
Submitted heating capacity	28000 Btuh	Submitted cooling capacity	28000 Btuh
Submitted as % of calculated	116.8 %	Submitted as % of calculated	101.6 %

WINTER CALCULATIONS

Winter Heating Load (for 1514 sqft)

Load component			Load	
Window total	172	sqft	4868	Btuh
Wall total	974	sqft	2794	Btuh
Door total	38	sqft	536	Btuh
Ceiling total	1585	sqft	2061	Btuh
Floor total	178	ft	5625	Btuh
Infiltration	162	cfm	6942	Btuh
Subtotal			**22825**	**Btuh**
Duct loss			1141	Btuh
TOTAL HEAT LOSS			**23966**	**Btuh**

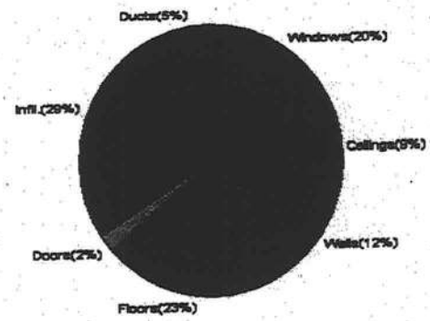

SUMMER CALCULATIONS

Summer Cooling Load (for 1514 sqft)

Load component			Load	
Window total	172	sqft	7554	Btuh
Wall total	974	sqft	2057	Btuh
Door total	38	sqft	492	Btuh
Ceiling total	1585	sqft	2504	Btuh
Floor total			0	Btuh
Infiltration	142	cfm	3738	Btuh
Internal gain			3000	Btuh
Subtotal(sensible)			**19345**	**Btuh**
Duct gain			1935	Btuh
Total sensible gain			**21280**	**Btuh**
Latent gain(infiltration)			4910	Btuh
Latent gain(internal)			1380	Btuh
Total latent gain			**6290**	**Btuh**
TOTAL HEAT GAIN			**27570**	**Btuh**

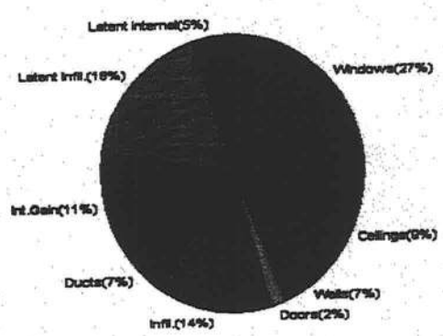

EnergyGauge® System Sizing based on ACCA Manual J.
PREPARED BY: _____
DATE: _____

System Sizing Calculations - Winter

Residential Load - Component Details

Spec House
SE Carob Gln, Suzanne Sub.
Lake City, Fl 32025-

Project Title:
Aaron Simque Homes - Hip Spec

Class 3 Rating
Registration No. 0
Climate: North

Reference City: Gainesville (User customized) Winter Temperature Difference: 39.0 F

9/6/2005

Window	Panes/SHGC/Frame/U	Orientation	Area X	HTM=	Load
1	2, Clear, Metal, DEF	W	40.0	28.3	1132 Btuh
2	2, Clear, Metal, DEF	W	60.0	28.3	1698 Btuh
3	2, Clear, Metal, DEF	W	4.0	28.3	113 Btuh
4	2, Clear, Metal, DEF	E	22.0	28.3	623 Btuh
5	2, Clear, Metal, DEF	E	15.0	28.3	424 Btuh
6	2, Clear, Metal, DEF	E	15.0	28.3	424 Btuh
7	2, Clear, Metal, DEF	S	4.0	28.3	113 Btuh
8	2, Clear, Metal, DEF	S	12.0	28.3	340 Btuh
	Window Total		172		4868 Btuh
Walls	Type	R-Value	Area X	HTM=	Load
1	Frame - Exterior	13.0	824	3.1	2554 Btuh
2	Frame - Adjacent	13.0	150	1.6	240 Btuh
	Wall Total		974		2794 Btuh
Doors	Type		Area X	HTM=	Load
1	Insulated - Exter		20	18.3	367 Btuh
2	Insulated - Adjac		18	9.4	169 Btuh
	Door Total		38		536Btuh
Ceilings	Type	R-Value	Area X	HTM=	Load
1	Under Attic	30.0	1585	1.3	2060 Btuh
	Ceiling Total		1585		2061Btuh
Floors	Type	R-Value	Size X	HTM=	Load
1	Slab-On-Grade Edge Insul	0	178.0 ft(p)	31.6	5625 Btuh
	Floor Total		178		5625 Btuh
Infiltration	Type	ACH X	Building Volume	CFM=	Load
	Natural	0.80	12112(sqft)	162	6942 Btuh
	Mechanical			0	0 Btuh
	Infiltration Total			162	6942 Btuh

Totals for Heating	**Subtotal**	**22825 Btuh**
	Duct Loss(using duct multiplier of 0.05)	**1141 Btuh**
	Total Btuh Loss	**23966 Btuh**

Key: Window types (SHGC - Shading coefficient of glass as SHGC numerical value or as clear or tint)
(Frame types - metal, wood or insulated metal)
(U - Window U-Factor or 'DEF' for default)
(HTM - ManualJ Heat Transfer Multiplier)

Key: Floor size (perimeter(p) for slab-on-grade or area for all other floor types)

System Sizing Calculations - Summer

Residential Load - Component Details

Spec House
SE Carob Gln, Suzanne Sub.
Lake City, Fl 32025-

Project Title:
Aaron Simque Homes - Hip Spec

Class 3 Rating
Registration No. 0
Climate: North

Reference City: Gainesville (User customized) Summer Temperature Difference: 24.0 F 9/6/2005

Window	Type Panes/SHGC/U/InSh/ExSh	Ornt	Overhang Len	Overhang Hgt	Window Area(sqft) Gross	Shaded	Unshaded	HTM Shaded	HTM Unshaded	Load
1	2, Clear, DEF, N, N	W	13.5	7.66	40.0	40.0	0.0	25	74	1000 Btuh
2	2, Clear, DEF, N, N	W	1.5	6	60.0	12.5	47.6	25	74	3830 Btuh
3	2, Clear, DEF, N, N	W	1.5	2	4.0	2.5	1.5	25	74	174 Btuh
4	2, Clear, DEF, N, N	E	11.5	7.66	22.0	22.0	0.0	25	74	550 Btuh
5	2, Clear, DEF, N, N	E	6.5	6	15.0	12.7	2.3	25	74	490 Btuh
6	2, Clear, DEF, N, N	E	1.5	6	15.0	0.0	15.0	25	74	1110 Btuh
7	2, Clear, DEF, N, N	S	1.5	2	4.0	4.0	0.0	25	39	100 Btuh
8	2, Clear, DEF, N, N	S	1.5	5	12.0	12.0	0.0	25	39	300 Btuh
	Window Total				172					7554 Btuh

Walls	Type	R-Value	Area	HTM	Load
1	Frame - Exterior	13.0	824.0	2.2	1829 Btuh
2	Frame - Adjacent	13.0	150.0	1.5	228 Btuh
	Wall Total		974.0		2057 Btuh

Doors	Type	Area	HTM	Load
1	Insulated - Exter	20.0	12.9	259 Btuh
2	Insulated - Adjac	18.0	12.9	233 Btuh
	Door Total	38.0		492 Btuh

Ceilings	Type/Color	R-Value	Area	HTM	Load
1	Under Attic/Dark	30.0	1585.0	1.6	2504 Btuh
	Ceiling Total		1585.0		2504 Btuh

Floors	Type	R-Value	Size	HTM	Load
1	Slab-On-Grade Edge Insulation	0.0	178.0 ft(p)	0.0	0 Btuh
	Floor Total		178.0		0 Btuh

Infiltration	Type	ACH	Volume	CFM=	Load
	Natural	0.70	12112	141.6	3738 Btuh
	Mechanical			0	0 Btuh
	Infiltration Total			142	3738 Btuh

Internal gain	Occupants		Btuh/occupant		Appliance	Load
	6	X	300	+	1200	3000 Btuh

Manual J Summer Calculations

Residential Load - Component Details (continued)

Spec House
SE Carob Gln, Suzanne Sub.
Lake City, Fl 32025-

Project Title:
Aaron Simque Homes - Hip Spec

Class 3 Rating
Registration No. 0
Climate: North

9/6/2005

Totals for Cooling	Subtotal	19345 Btuh
	Duct gain(using duct multiplier of 0.10)	1935 Btuh
	Total sensible gain	21280 Btuh
	Latent infiltration gain (for 51 gr. humidity difference)	4910 Btuh
	Latent occupant gain (6 people @ 230 Btuh per person)	1380 Btuh
	Latent other gain	0 Btuh
	TOTAL GAIN	27570 Btuh

Key: Window types (SHGC - Shading coefficient of glass as SHGC numerical value or as clear or tint)
(U - Window U-Factor or 'DEF' for default)
(InSh - Interior shading device: none(N), Blinds/Daperies(B) or Roller Shades(R))
(ExSh - Exterior shading device: none(N) or numerical value)
(Ornt - compass orientation)

REV.	DATE	BY	DESCRIPTION
A	11-27-00	DW	SEE ECN 834
B	12-1-00	DW	SEE ECN 836

LISTED SBCCI PGI & ESI

REPORT No. 2202

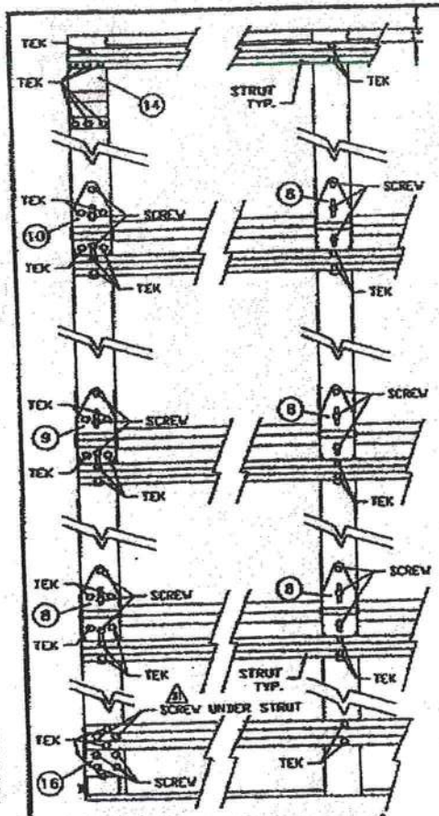

FASTENER ARRANGEMENT

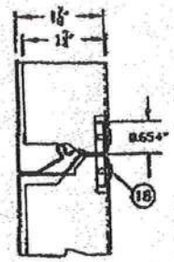

SEC D-D
PAN ATTACHMENT TO STILE (OPTIONAL)

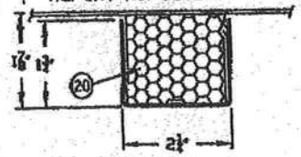

SEC G-G
CENTER STILE
20 GA. GALVANIZED

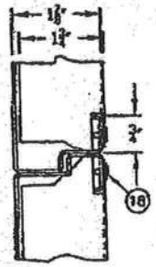

SEC D-D
PAN ATTACHMENT TO STILE (AS TESTED)

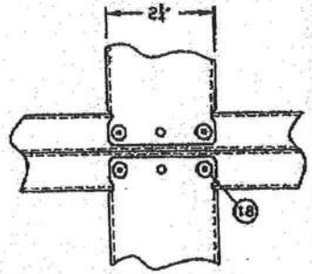

PAN ATTACHMENT TO STILE

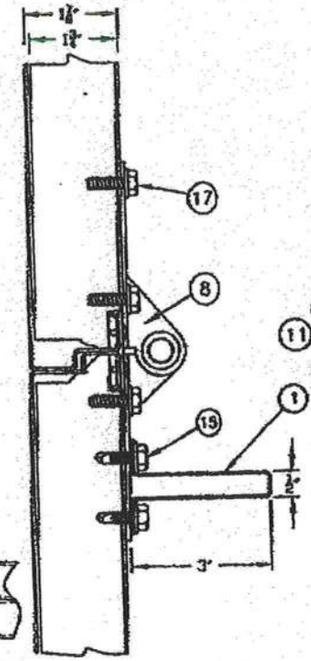

SEC A-A

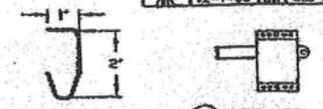

TRACK
16 GA. (.055 MIN.)

(12) SIDE LOCK

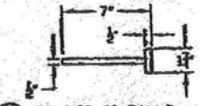

(11) ROLLER 10 BALLS

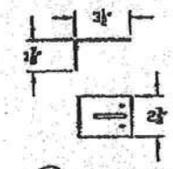

(4) #6 JAMB BRACKET

(1) 5-3"x20 GA. 80 KSI YIELD STRENGTH HEMMED STRUT APPLIED WITH 2 TEK SCREWS PER HINGE OR STILE LOCATION (4 PER STRUT, MINIMUM)

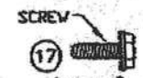

(17) SCREW
1/4-20 X 3/4
HEX WASHERHEAD SCREW

(15) TEK
1/4-20 X 3/4
HWH TEK SCREW WITH #2 REDUCED POINT

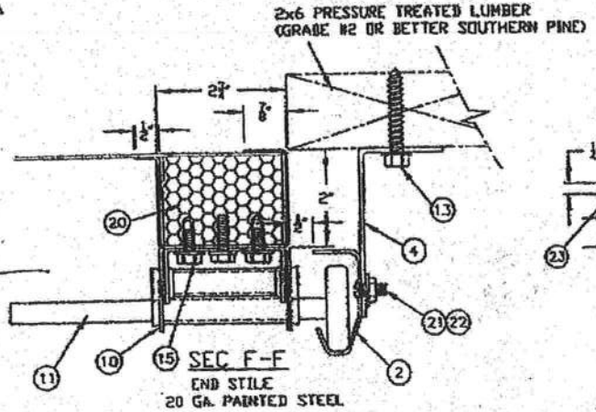

SEC F-F
END STILE
20 GA. PAINTED STEEL

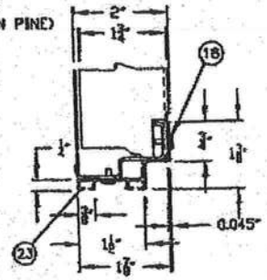

SEC E-E

ITEM	PART NO.	DESCRIPTION
23	3485	BOTTOM RAIL, 6063 T6 ALUM EXT.
22	1391	1/4"-20 X 3/8" RIBBED NECK SCREW
21	4044	1/4"-20 SERRATED FLANGE NUT
20		LOW DENSITY FILLER BLOCK EPS
19		
18	4389	POP RIVET, 5/32" STEEL
17	4259	HEX WASHERHEAD SCREW 1/4"-20 X 3/4"
16	1399LBR	BOTTOM ROLLER BRACKET
15	0138	RWH TEK SCREW 1/4-20 X 3/4 W/ REDUCED PT.
14	3875	TOP SUPPORT BRACKET
13	4063	5/16" X 1-5/8" LAG SCREW
12	4710	SIDE LOCK
11	4306	LONG STEM ROLLER 2"
10	4203	ROLLER CARRIER HINGE #3 (14 GA)
9	4202	ROLLER CARRIER HINGE #2 (14 GA)
8	4201	ROLLER CARRIER HINGE #1 (14 GA)
7		COUNTER BALANCE (TORSION BAR & SPRINGS)
6		HORIZONTAL TRACK & ANGLE (16 GA)
5		VERTICAL FLAG ANGLE
4	4585-6	TRACK BRACKET #6 (12 GA)
3		
2		VERTICAL TRACK (16 GA)
1		3" HEMMED STRUT(20 GA) MIN. YIELD STR. 80KSI

GADCO

GENERAL AMERICAN DOOR COMPANY
5050 BASELINE ROAD
MONTGOMERY, IL 60538

SCALE: NONE | APPROVED BY: | DRAWN BY: D. VICDMAN
DATE: 11-7-00 | REVISED: (B) 12-1-00

DESCRIPTION: 16' X 7' NAX. RAISED PANEL STEEL DOOR-WINDLOAD ±28 PSF

PAGE 2 OF 2 | DRAWING NUMBER: W13228-2

NORTH CAROLINA PROFESSIONAL SEAL PE No. 024280 ENGINEER NEMA KEYVAN

The seal on this drawing only certifies that the product(s) illustrated and described herein represent the configuration(s), dimensions and installation(s) of the door as tested.

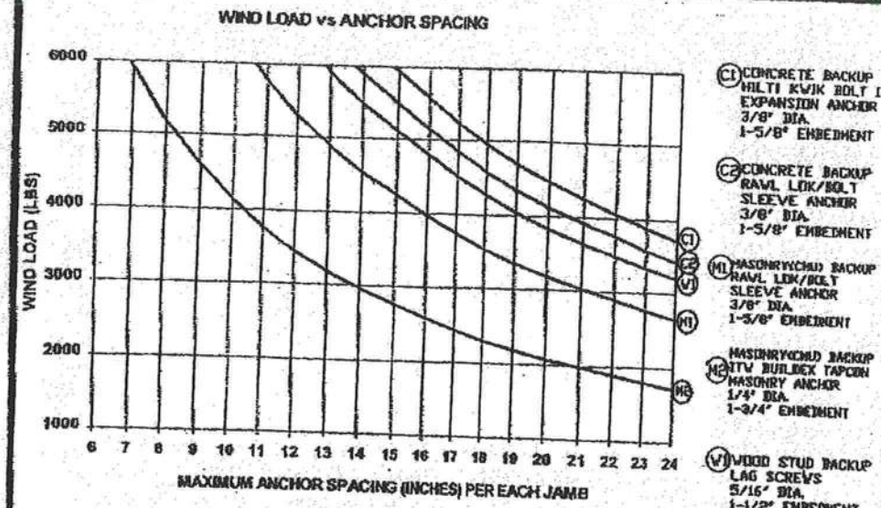

2x6 JAMB TO SUPPORTING STRUCTURE ATTACHMENT

2x6 PRESSURE TREATED (GRADE #2 OR BETTER SOUTHERN PINE) WOOD JAMB SHALL BE ANCHORED TO BUILDING WOOD FRAME, GROUTED AND REINFORCED CONCRETE MASONRY UNIT (CMU) WALLS OR COLUMNS, OR REINFORCED CONCRETE COLUMNS.

NOTES:

1) ALL DOOR OPENING SURROUNDING STRUCTURE TO BE DESIGNED BY REGISTERED ENGINEER OR ARCHITECT WITH DUE CONSIDERATION GIVEN TO INSTALLATIONS USING CENTER "HURRICANE" POSTS.

2) ALL DOOR OPENING STRUCTURE AND FASTENERS TO COMPLY WITH ALL APPLICABLE CODES INCLUDING SBCCI "STANDARD FOR HURRICANE RESISTANT RESIDENTIAL CONSTRUCTION SSTD 10," CURRENT EDITION.

3) ALL FASTENERS TO BE INSTALLED IN STRICT ACCORDANCE WITH MANUFACTURER'S SPECIFICATIONS, INSTRUCTIONS AND RECOMMENDATIONS.

4) WOOD FRAME BUILDINGS: STUDS AT EACH SIDE OF DOOR OPENING SHALL BE PROPERLY DESIGNED, CONNECTED, ANCHORED AND SHALL CONSIST OF A MINIMUM OF THREE (3) LAMINATIONS OF 2X6 PRESSURE TREATED SOUTHERN PINE (#2 GRADE OR BETTER) WALL STUDS CONTINUOUS FROM FOOTING TO DOUBLE TOP PLATE.

5) REINFORCED CMU OR CONCRETE: 2X6 WOOD JAMB SHALL BE ANCHORED TO SOLIDLY GROUTED AND REINFORCED CONCRETE MASONRY UNIT (CMU) WALLS OR COLUMNS, OR REINFORCED CONCRETE COLUMNS. ANCHOR SPACING AND EMBEDMENT IS BASED ON CONCRETE MASONRY UNITS COMPLYING WITH ASTM C90 WITH A MINIMUM NET AREA COMPRESSIVE STRENGTH OF 2150 PSI; GROUT WITH A MINIMUM COMPRESSIVE STRENGTH OF 2000 PSI; REINFORCED CONCRETE COLUMNS WITH A MINIMUM COMPRESSIVE STRENGTH OF 2500 PSI.

6) EMBEDMENTS LISTED ARE THE MINIMUM ALLOWABLE EMBEDMENTS.

7) ANCHORS FOR CONCRETE AND CONCRETE MASONRY UNITS (CMU) SHALL HAVE A MINIMUM 3" EDGE DISTANCE FROM ALL EDGES OF CONCRETE OR CONCRETE MASONRY UNITS. ANCHORS FOR CONCRETE AND CMU SHALL HAVE A MINIMUM SPACING OF 3-3/4"

8) LAG SCREWS SHALL BE CENTERED IN ONE OF THE 1-1/2" DIMENSION FACES OF THE TRIPLE 2X6 WALL STUDS.

9) WASHERS ARE REQUIRED ON ALL FASTENERS.

10) THE WIND LOAD VS. ANCHOR SPACING CHART IS FOR A MAXIMUM DOOR SIZE OF 18' X 8' AT A MAXIMUM 42 PSF DESIGN WIND LOAD.

11) FOR THE UPPER THREE INDIVIDUAL STEEL JAMB BRACKETS, BRACKETS SHALL BE CENTERED BETWEEN THE TWO CLOSEST 2X6 WOOD JAMB ANCHORS. IF THE STEEL JAMB BRACKET IS NOT CENTERED BETWEEN THE TWO CLOSEST 2X6 WOOD JAMB ANCHORS, ADD AN ADDITIONAL 2X6 WOOD JAMB ANCHOR NEAR THAT STEEL BRACKET TO INSURE THAT THE LOAD FROM THE STEEL BRACKET IS EQUALLY TRANSFERRED TO TWO WOOD JAMB ANCHORS.

DESIGN LOAD $\frac{(LBS)}{FT^2}$ X GARAGE DOOR AREA(WIDTH-FT X HEIGHT-FT) = WIND LOAD(LBS)

EXAMPLE

$\frac{30\ LBS}{FT^2}$ X (16 FT WIDE X 8 FT HIGH) = 3840 LBS

- C1 USE 22" SPACING
- C2 USE 21" SPACING
- W1 USE 19" SPACING
- M1 USE 16" SPACING
- M2 USE 10" SPACING

SEE NOTE 11 FOR ADDITIONAL REQUIRED 2X6 WOOD JAMB ANCHORS

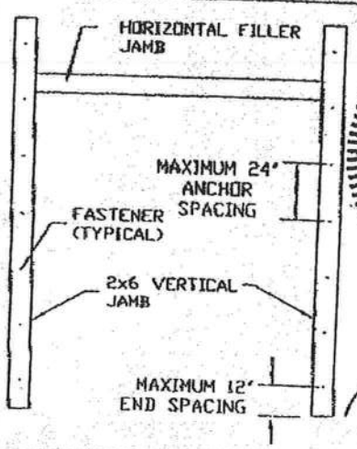

NORTH CAROLINA PROFESSIONAL SEAL PE No. 024280 ENGINEER NASER R KEYVAN

NASER R KEYVAN LICENSE NO. 53774 STATE OF FLORIDA PROFESSIONAL ENGINEER

3/8/2002

GADCO® GENERAL AMERICAN DOOR COMPANY
5050 BASELINE ROAD
MONTGOMERY, IL 60538

SCALE NONE	APPROVED BY	DRAWN BY DV
DATE 8-30-99		REVISED
DESCRIPTION JAMB TO STRUCTURE ATTACHMENT FOR WIND LOADED GARAGE DOORS		
	MASTER DRAWING NUMBER A10560	DRAWING NUMBER

XX
Unit

MAD-WL-MA0012-02

OUTSWING UNITS WITH DOUBLE DOOR

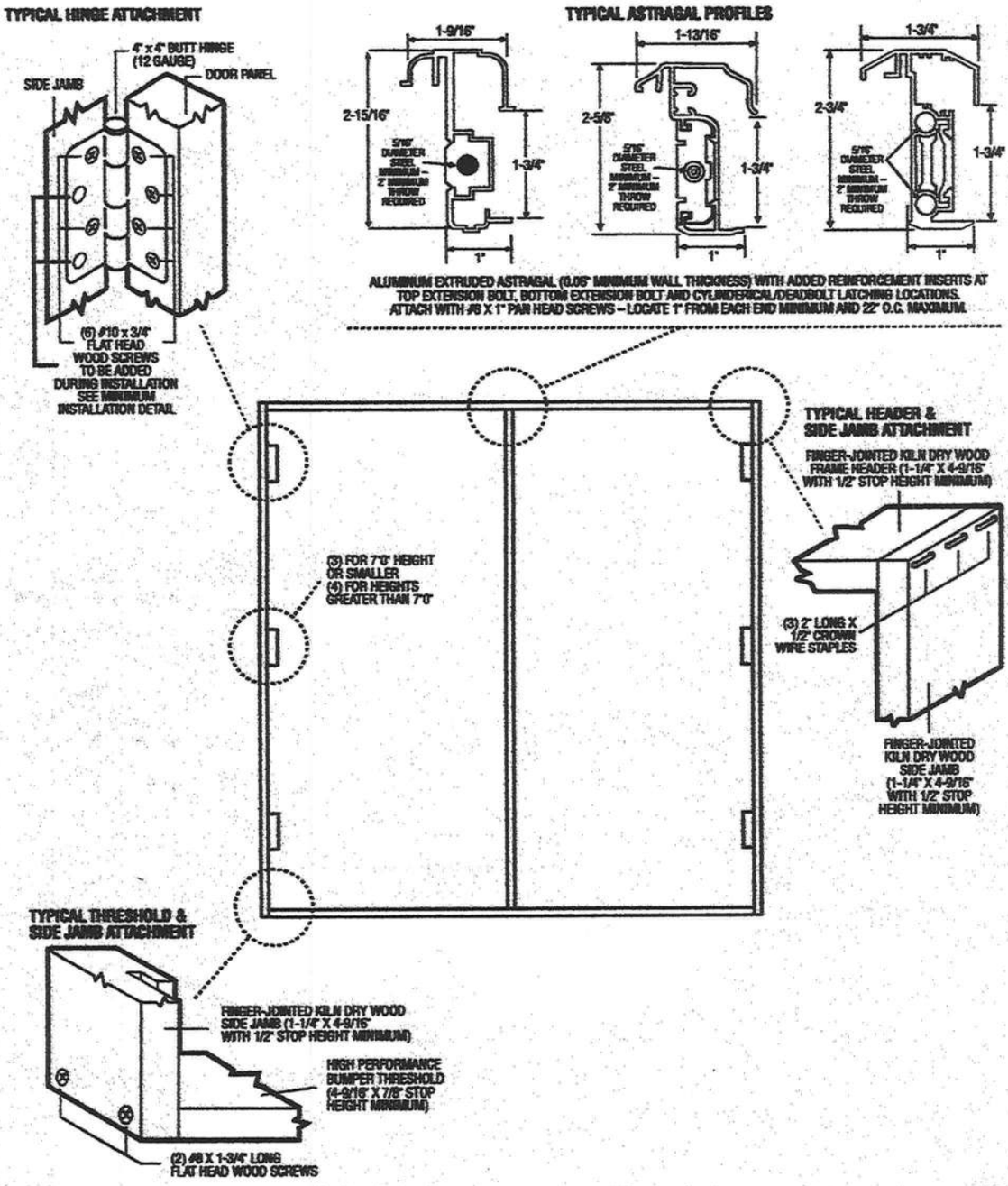

March 29, 2002
Our continuing program of product improvement makes specifications, design and product detail subject to change without notice.

PREMDOR Collection Premium Quality Doors
Exclusively from Masonite®
Masonite International Corporation

XX
Unit

MID-WL-MA0002-02

DOUBLE DOOR

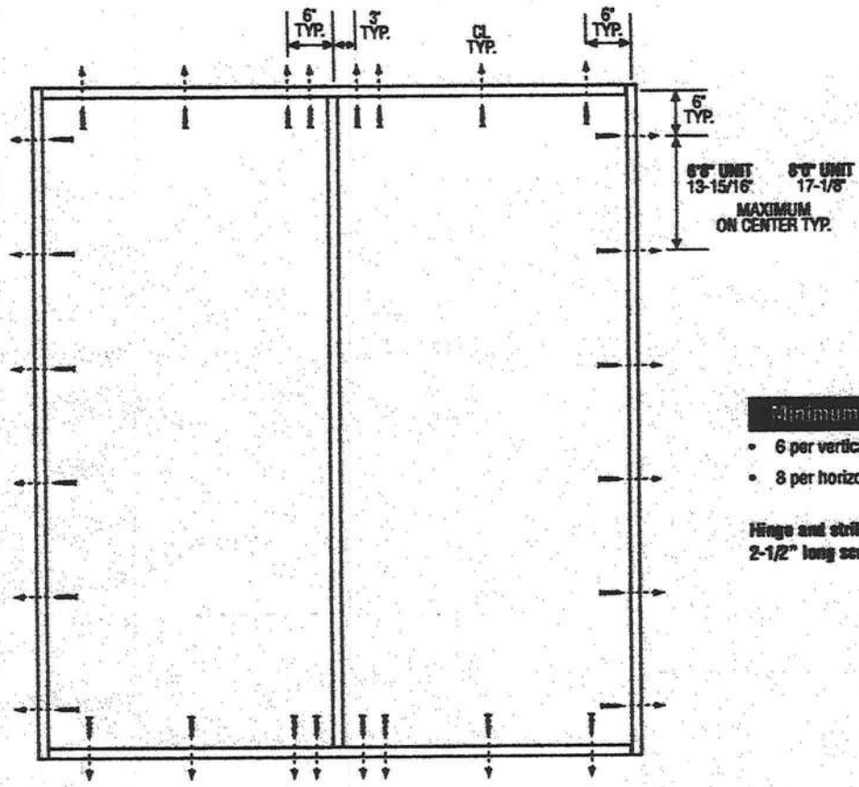

Minimum Fastener Count

- 6 per vertical framing member
- 8 per horizontal framing member

Hinge and strike plates require two 2-1/2" long screws per location.

Latching Hardware:

- Compliance requires that GRADE 2 or better (ANSI/BHMA A156.2) cylinderical and deadlock hardware be installed.

Notes:

1. Anchor calculations have been carried out with the lowest (least) fastener rating from the different fasteners being considered for use. Fasteners analyzed for this unit include #8 and #10 wood screws or 3/16" Tapcons.
2. The wood screw single shear design values come from Table 11.3A of ANSI/AF & PA NDS for southern pine lumber with a side member thickness of 1-1/4" and achievement of minimum embedment. The 3/16" Tapcon single shear design values come from the ITW and ELCO Dade Country approvals respectively, each with minimum 1-1/4" embedment.
3. Wood bucks by others, must be anchored properly to transfer loads to the structure.

PREMDOR Collection Premium Quality Doors
Exclusively from Masonite
Masonite International Corporation

March 29, 2002
Our continuing program of product improvement makes specifications, design and product detail subject to change without notice.

650-AS1 A

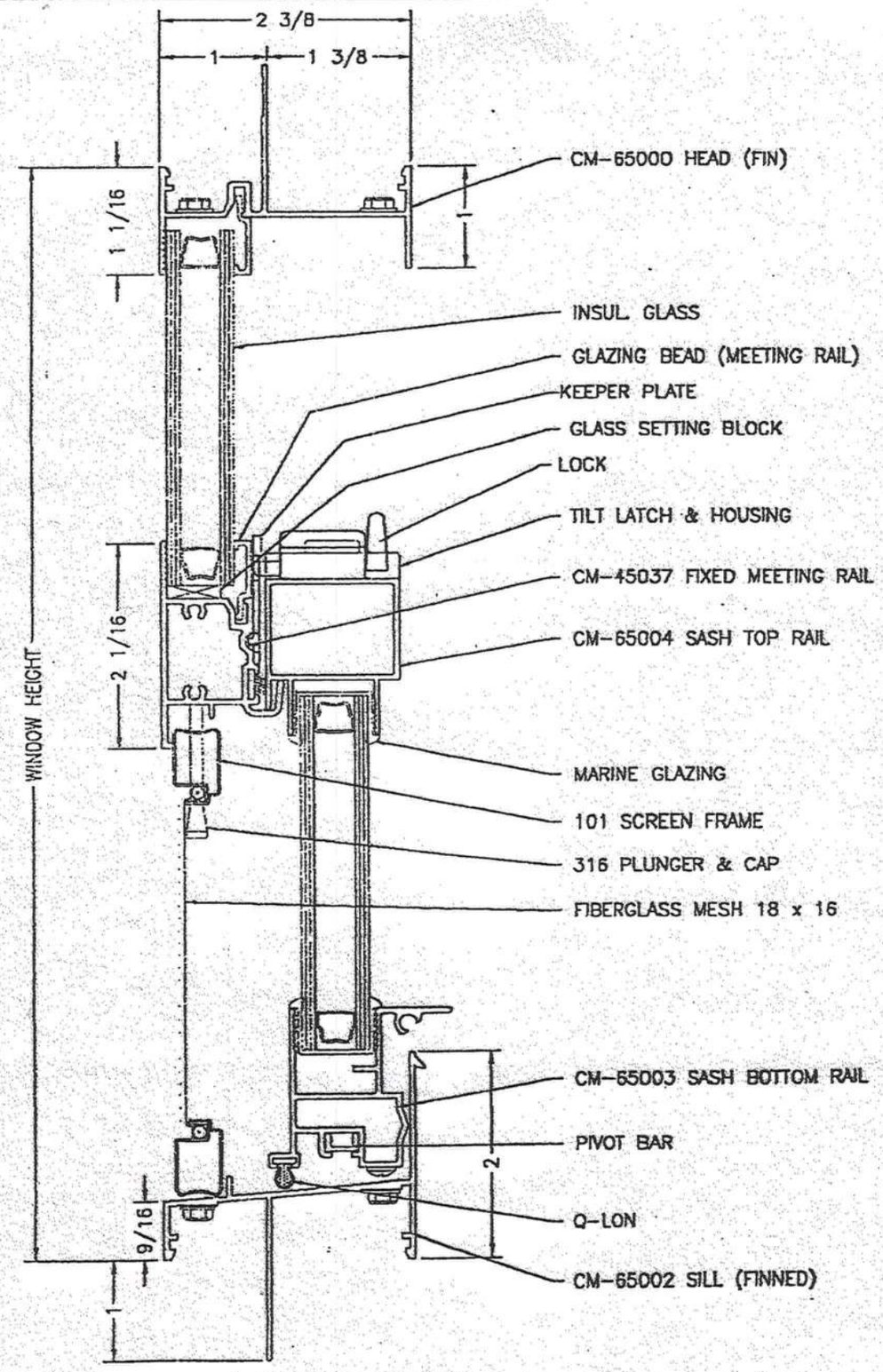

MI HOME PRODUCTS
650 WEST MARKET STREET • GRATZ, PA • 17030-0370

TITLE 650 SH FIN MAIN FRAME VERTICAL CROSS SECTION

LTR	DESCRIPTION REVISIONS	BY	DATE

DFTM	DATE	SCALE	DWG. NO.	REV.
V.M.R.	4-7-92	FULL	650-AS1	A

650-AS2 | B

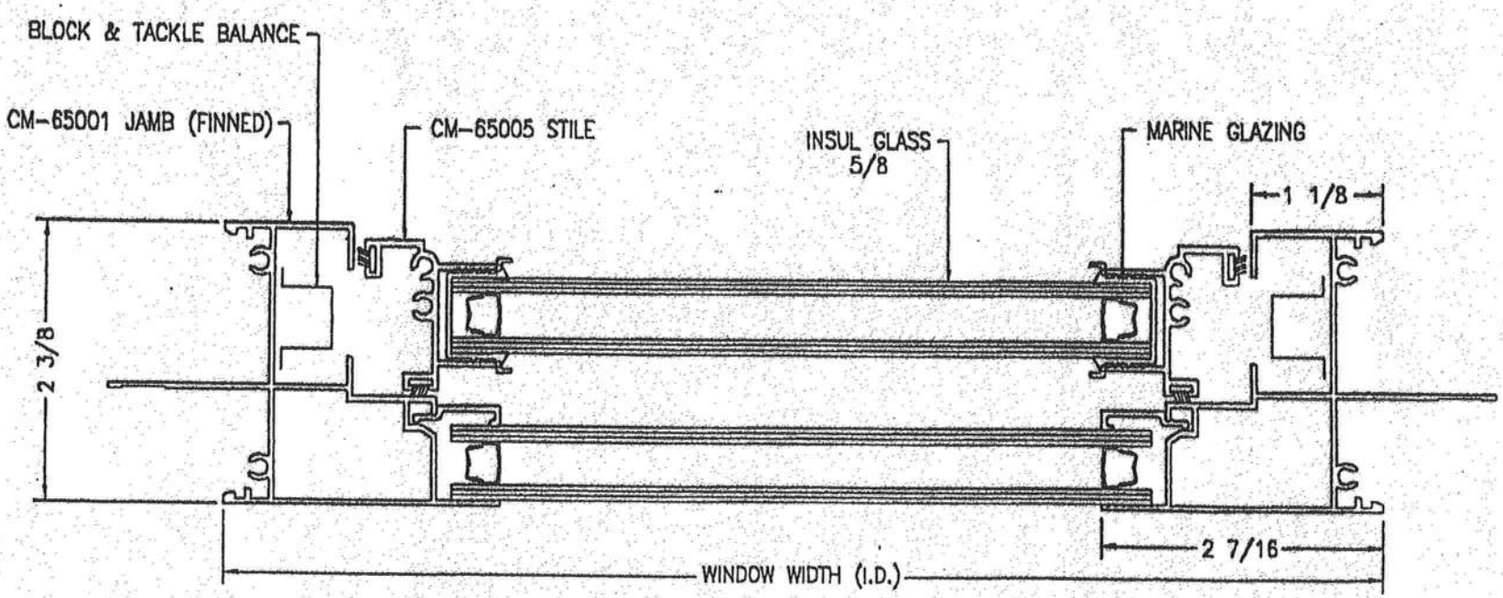

LTR.	DESCRIPTION REVISIONS	BY	DATE

MI HOME PRODUCTS
650 WEST MARKET STREET • GRATZ, PA • 17030-0370

TITLE: 650 SH FIN MAIN FRAME INSULATED GLASS HORIZONTAL CROSS SECTION

DRAWN	DATE	SCALE	DRAWING NO.	REV.
V.M.R.	4-7-92	FULL	650-AS2	B

MIAMI-DADE

DOOR DATA

MIAMI-DADE COUNTY, FLORIDA
METRO-DADE FLAGLER BUILDING

BUILDING CODE COMPLIANCE OFFICE
METRO-DADE FLAGLER BUILDING
140 WEST FLAGLER STREET, SUITE 1603
MIAMI, FLORIDA 33130-1563
(305) 375-2901 FAX (305) 375-2908

CONTRACTOR LICENSING SECTION
(305) 375-2527 FAX (305) 375-2558

CONTRACTOR ENFORCEMENT DIVISION
(305) 375-2966 FAX (305) 375-2908

PRODUCT CONTROL DIVISION
(305) 375-2902 FAX (305) 372-6339

PRODUCT CONTROL NOTICE OF ACCEPTANCE

Premdor Entry Systems
911 E. Jeferson, P.O. Box 76
Pittsburgh ,KS 66762

Your application for Notice of Acceptance (NOA) of:
Entergy 6-8 S-W/E Inswing Opaque Double w/sidelites Residential Insulated Steel Door
under Chapter 8 of the Code of Miami-Dade County governing the use of Alternate Materials and Types of Construction, and completely described herein, has been recommended for acceptance by the Miami-Dade County Building Code Compliance Office (BCCO) under the conditions specified herein.

This NOA shall not be valid after the expiration date stated below. BCCO reserves the right to secure this product or material at any time from a jobsite or manufacturer's plant for quality control testing. If this product or material fails to perform in the approved manner, BCCO may revoke, modify, or suspend the use of such product or material immediately. BCCO reserves the right to revoke this approval, if it is determined by BCCO that this product or material fails to meet the requirements of the South Florida Building Code.

The expense of such testing will be incurred by the manufacturer.

ACCEPTANCE NO.: 01-0314.24
EXPIRES: 04/02/2006

Raul Rodriguez
Chief Product Control Division

THIS IS THE COVERSHEET, SEE ADDITIONAL PAGES FOR SPECIFIC AND GENERAL CONDITIONS
BUILDING CODE & PRODUCT REVIEW COMMITTEE

This application for Product Approval has been reviewed by the BCCO and approved by the Building Code and Product Review Committee to be used in Miami-Dade County, Florida under the conditions set forth above.

Francisco J. Quintana, R.A.
Director
Miami-Dade County
Building Code Compliance Office

APPROVED: 06/05/2001

MIAMI-DADE COUNTY, FLORIDA
METRO-DADE FLAGLER BUILDING

BUILDING CODE COMPLIANCE OFFICE
METRO-DADE FLAGLER BUILDING
140 WEST FLAGLER STREET, SUITE 1603
MIAMI, FLORIDA 33130-1563
(305) 375-2901 FAX (305) 375-2908

CONTRACTOR LICENSING SECTION
(305) 375-2527 FAX (305) 375-2558

CONTRACTOR ENFORCEMENT DIVISION
(305) 375-2966 FAX (305) 375-2908

PRODUCT CONTROL DIVISION
(305) 375-2902 FAX (305) 372-6339

PRODUCT CONTROL NOTICE OF ACCEPTANCE

Premdor Entry Systems
911 E. Jeferson, P.O. Box 76
Pittsburgh ,KS 66762

Your application for Notice of Acceptance (NOA) of:
Entergy 6-8 S-W/E Inswing Opaque Single w/sidelites Residential Insulated Steel Door
under Chapter 8 of the Code of Miami-Dade County governing the use of Alternate Materials and Types of Construction, and completely described herein, has been recommended for acceptance by the Miami-Dade County Building Code Compliance Office (BCCO) under the conditions specified herein.

This NOA shall not be valid after the expiration date stated below. BCCO reserves the right to secure this product or material at any time from a jobsite or manufacturer's plant for quality control testing. If this product or material fails to perform in the approved manner, BCCO may revoke, modify, or suspend the use of such product or material immediately. BCCO reserves the right to revoke this approval, if it is determined by BCCO that this product or material fails to meet the requirements of the South Florida Building Code.

The expense of such testing will be incurred by the manufacturer.

ACCEPTANCE NO.: 01-0314.18
EXPIRES: 04/02/2006

Raul Rodriguez
Chief Product Control Division

THIS IS THE COVERSHEET, SEE ADDITIONAL PAGES FOR SPECIFIC AND GENERAL CONDITIONS
BUILDING CODE & PRODUCT REVIEW COMMITTEE

This application for Product Approval has been reviewed by the BCCO and approved by the Building Code and Product Review Committee to be used in Miami-Dade County, Florida under the conditions set forth above.

Francisco J. Quintana, R.A.
Director
Miami-Dade County
Building Code Compliance Office

APPROVED: 06/05/2001

Florida Building Code Online

The Florida Department of Community Affairs
Building Code Information System

FLORIDA BUILDING CODE

Overview | User Registration | Organization Registration | User Authorization | Organization Search | Organization Accreditation

Select the organization type, status, or name to find an organization

Organization Type: Product Manufacturer

Manufact. Buildings

Approval Status: (ALL)

Organization Name: General American Door - Product Manufacturer

Cancel

Search

Result List for Organizations

Displaying 1-1 of 1

Name	City	Contact	Phone	Type	Expire	Status
General American Door	Montgomery	James Campbell	6308593000	Product Manufacturer	01/01/2099	Approved
Org Code: PDM System ID: 3585			Site Link: www.gadco.com			

Displaying 1-1 of 1

REV.	DATE	BY	DESCRIPTION
A	11-27-00	DW	SEE ECN 834
B	12-1-00	DW	SEE ECN 835

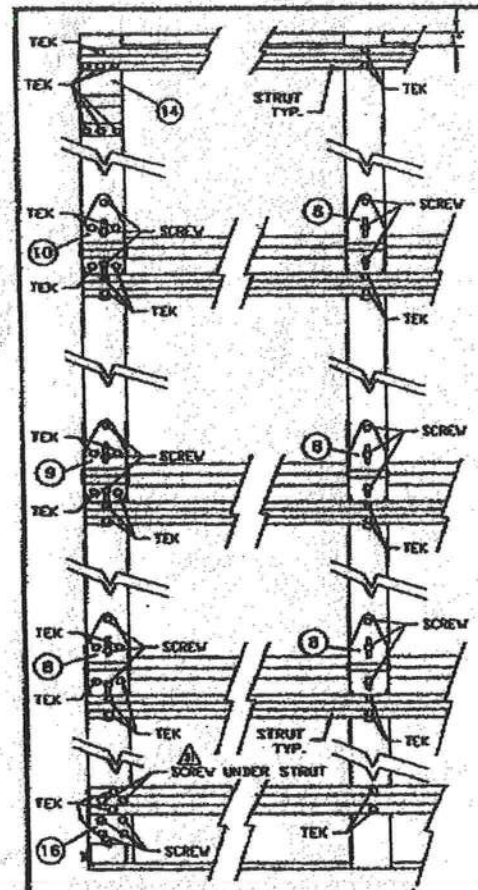

FASTENER ARRANGEMENT

LISTED
SBCCI PST & ESI
REPORT No. 2202

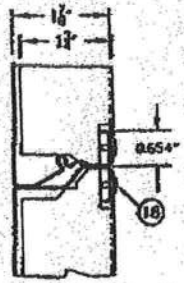

SEC D-D
PAN ATTACHMENT TO STILE (OPTIONAL)

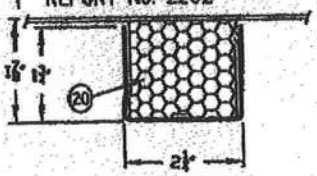

SEC G-G
CENTER STILE
20 GA. GALVANIZED

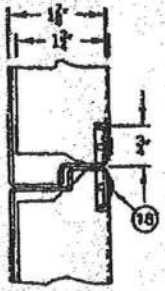

SEC D-D
PAN ATTACHMENT TO STILE (AS TESTED)

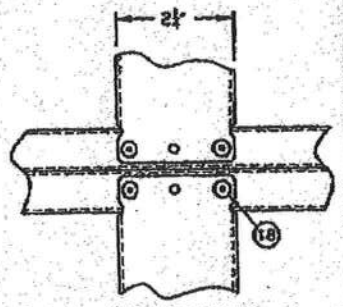

PAN ATTACHMENT TO STILE

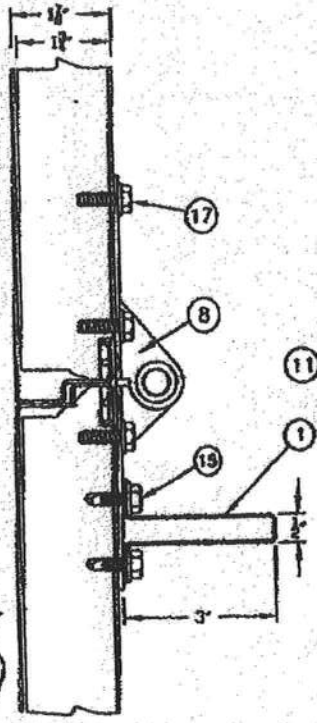

SEC A-A

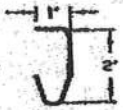

TRACK
16 GA. (055 MIN.)

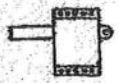

(12) SIDE LOCK

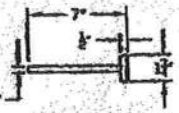

(11) ROLLER 10 BALLS.

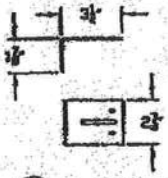

(4) #6 JAMB BRACKET

(1) 9-3"x20 GA. 80 KSI YIELD STRENGTH HEMMED STRUT APPLIED WITH 2 TEK SCREWS PER HINGE OR STILE LOCATION (14 PER STRUT, MINIMUM)

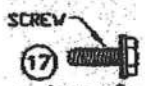

(17) 1/4-20 X 3/4 HEX WASHERHEAD SCREW

(15) 1/4-20 X 3/4 HWH TEK SCREW WITH #2 REDUCED POINT

2x6 PRESSURE TREATED LUMBER (GRADE #2 OR BETTER SOUTHERN PINE)

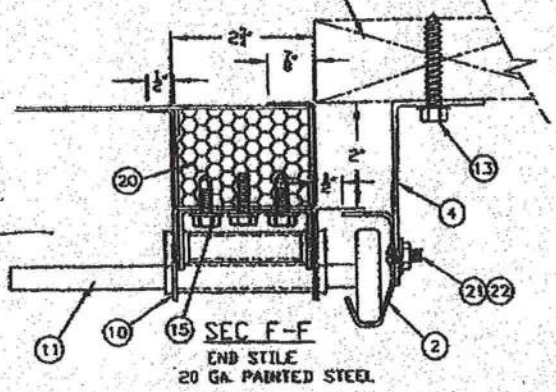

SEC F-F
END STILE
20 GA. PAINTED STEEL

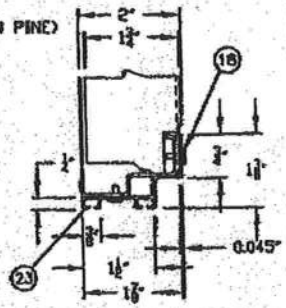

SEC E-E

ITEM	PART NO.	DESCRIPTION
23	3485	BOTTOM RAIL 6063 T6 ALUM EXT.
22	1391	1/4"-20 X 5/8" RIBBED NECK SCREW
21	4044	1/4"-20 SERRATED FLANGE NUT
20		1 LB DENSITY FILLER BLOCK EPS
19		
18	4389	POP RIVET, 5/32" STEEL
17	4229	HEX WASHERHEAD SCREW 1/4"-20 X 3/4"
16	1399LUR	BOTTOM ROLLER BRACKET
15	1128	HWH TEK SCREW 1/4-20 X 3/4 W/ REDUCED PT.
14	2875	TOP SUPPORT BRACKET
13	4043	5/16" X 1-5/8" LAG SCREW
12	4718	SIDE LOCK
11	4306	LONG STEM ROLLER 2"
10	4203	ROLLER CARRIER HINGE #3 (14 GA)
9	4202	ROLLER CARRIER HINGE #2 (14 GA)
8	4201	ROLLER CARRIER HINGE #1 (14 GA)
7		COUNTER BALANCE (TORSION BAR & SPRINGS)
6		HORIZONTAL TRACK & ANGLE (16 GA)
5		VERTICAL FLAG ANGLE
4	4585-6	TRACK BRACKET #6 (12 GA)
3		
2		VERTICAL TRACK (16 GA)
1		3" HEMMED STRUT(20 GA) MIN. YIELD STR. 80KSI

NORTH CAROLINA PROFESSIONAL SEAL PE No. 024280 ENGINEER

The seal on this drawing only certifies that the product(s) illustrated and described herein represent the configuration(s), dimensions and installation(s) of the door as tested.

GADCO
GENERAL AMERICAN DOOR COMPANY
5050 BASELINE ROAD
MONTGOMERY, IL 60538

SCALE NONE | APPROVED BY | DRAWN BY B. VIERMAN
DATE 11-7-00 | REVISED (B) 12-1-00

DESCRIPTION: 16' X 7' MAX. RAISED PANEL STEEL DOOR-WINDLOAD ±20 PSF

PAGE 2 OF 2 | DRAWING NUMBER W13220-2

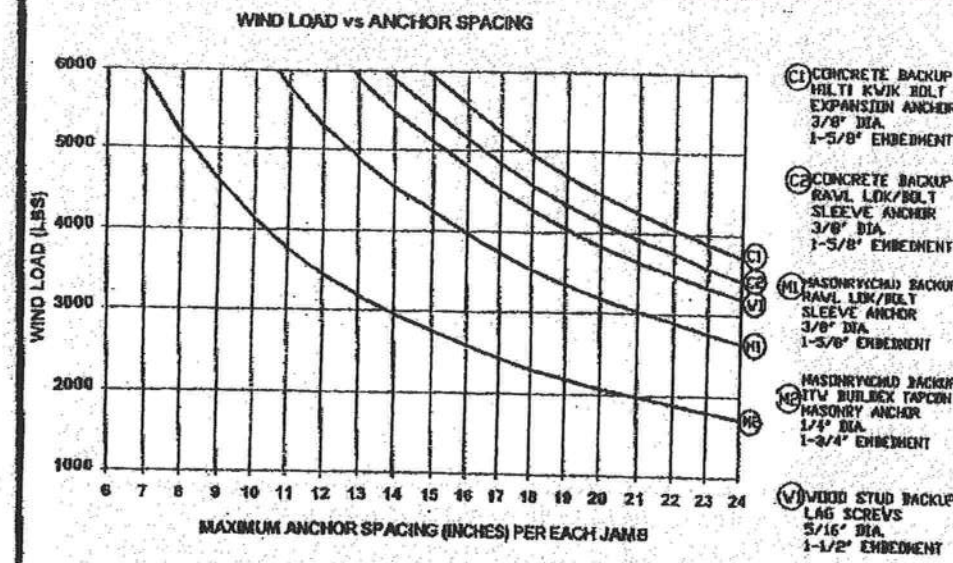

DESIGN LOAD $\frac{(LBS)}{FT^2}$ X GARAGE DOOR AREA(WIDTH-FT X HEIGHT-FT) = WIND LOAD(LBS)

EXAMPLE

$\frac{30\ LBS}{FT^2}$ X (16 FT WIDE X 8 FT HIGH) = 3840 LBS

- C1 USE 22" SPACING
- C2 USE 21" SPACING
- V1 USE 19" SPACING
- M1 USE 16" SPACING
- M2 USE 10" SPACING

SEE NOTE 11 FOR ADDITIONAL REQUIRED 2X6 WOOD JAMB ANCHORS

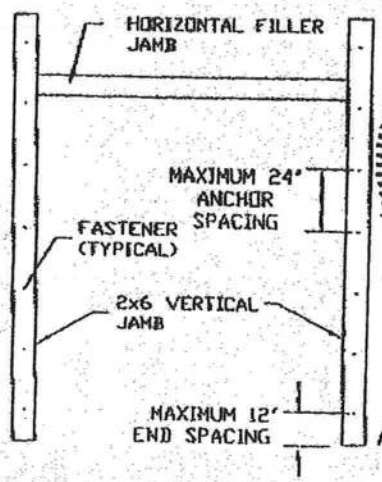

NORTH CAROLINA PROFESSIONAL SEAL PE No. 024280 ENGINEER NASER R KEYVAN

NASER R KEYVAN LICENSED NO. 53774 STATE OF FLORIDA PROFESSIONAL ENGINEER

3/8/2002

2x6 JAMB TO SUPPORTING STRUCTURE ATTACHMENT

2x6 PRESSURE TREATED (GRADE #2 OR BETTER SOUTHERN PINE) WOOD JAMB SHALL BE ANCHORED TO BUILDING WOOD FRAME, GROUTED AND REINFORCED CONCRETE MASONRY UNIT (CMU) WALLS OR COLUMNS, OR REINFORCED CONCRETE COLUMNS.

NOTES:

1) ALL DOOR OPENING SURROUNDING STRUCTURE TO BE DESIGNED BY REGISTERED ENGINEER OR ARCHITECT WITH DUE CONSIDERATION GIVEN TO INSTALLATIONS USING CENTER "HURRICANE" POSTS.

2) ALL DOOR OPENING STRUCTURE AND FASTENERS TO COMPLY WITH ALL APPLICABLE CODES INCLUDING SBCCI "STANDARD FOR HURRICANE RESISTANT RESIDENTIAL CONSTRUCTION: SSTD 10," CURRENT EDITION.

3) ALL FASTENERS TO BE INSTALLED IN STRICT ACCORDANCE WITH MANUFACTURER'S SPECIFICATIONS, INSTRUCTIONS AND RECOMMENDATIONS.

4) WOOD FRAME BUILDINGS: STUDS AT EACH SIDE OF DOOR OPENING SHALL BE PROPERLY DESIGNED, CONNECTED, ANCHORED AND SHALL CONSIST OF A MINIMUM OF THREE (3) LAMINATIONS OF 2X6 PRESSURE TREATED SOUTHERN PINE (#2 GRADE OR BETTER) WALL STUDS CONTINUOUS FROM FOOTING TO DOUBLE TOP PLATE.

5) REINFORCED CMU OR CONCRETE: 2X6 WOOD JAMB SHALL BE ANCHORED TO SOLIDLY GROUTED AND REINFORCED CONCRETE MASONRY UNIT (CMU WALLS OR COLUMNS, OR REINFORCED CONCRETE COLUMNS. ANCHOR SPACING AND EMBEDMENT IS BASED ON CONCRETE MASONRY UNITS COMPLYING WITH ASTM C90 WITH A MINIMUM NET AREA COMPRESSIVE STRENGTH OF 2150 PSI; GROUT WITH A MINIMUM COMPRESSIVE STRENGTH OF 2000 PSI; REINFORCED CONCRETE COLUMNS WITH A MINIMUM COMPRESSIVE STRENGTH OF 2500 PSI.

6) EMBEDMENTS LISTED ARE THE MINIMUM ALLOWABLE EMBEDMENTS.

7) ANCHORS FOR CONCRETE AND CONCRETE MASONRY UNITS (CMU) SHALL HAVE A MINIMUM 3" EDGE DISTANCE FROM ALL EDGES OF CONCRETE OR CONCRETE MASONRY UNITS. ANCHORS FOR CONCRETE AND CMU SHALL HAVE A MINIMUM SPACING OF 3-3/4"

8) LAG SCREWS SHALL BE CENTERED IN ONE OF THE 1-1/2" DIMENSION FACES OF THE TRIPLE 2X6 WALL STUDS.

9) WASHERS ARE REQUIRED ON ALL FASTENERS.

10) THE WIND LOAD VS. ANCHOR SPACING CHART IS FOR A MAXIMUM DOOR SIZE OF 16' X 8' AT A MAXIMUM 42 PSF DESIGN WIND LOAD.

11) FOR THE UPPER THREE INDIVIDUAL STEEL JAMB BRACKETS, BRACKETS SHALL BE CENTERED BETWEEN THE TWO CLOSEST 2X6 WOOD JAMB ANCHORS. IF THE STEEL JAMB BRACKET IS NOT CENTERED BETWEEN THE TWO CLOSEST 2X6 WOOD JAMB ANCHORS, ADD AN ADDITIONAL 2X6 WOOD JAMB ANCHOR NEAR THAT STEEL BRACKET TO INSURE THAT THE LOAD FROM THE STEEL BRACKET IS EQUALLY TRANSFERRED TO TWO WOOD JAMB ANCHORS.

GADCO®
GENERAL AMERICAN DOOR COMPANY
5050 BASELINE ROAD
MONTGOMERY, IL 60538

SCALE NONE	APPROVED BY	DRAWN BY DV
DATE 8-30-99		REVISED
DESCRIPTION JAMB TO STRUCTURE ATTACHMENT FOR WIND LOADED GARAGE DOORS		
	MASTER DRAWING NUMBER A10560	DRAWING NUMBER

AAMA/NWWDA 101/I.S.2-97
TEST REPORT SUMMARY

Rendered to:

MI HOME PRODUCTS, INC.

SERIES/MODEL: 650
TYPE: Aluminum Picture Window

Title of Test	Results
Rating	F-R45 60 x 80
Overall Design Pressure	+45.0 psf -47.2 psf
Air Infiltration	0.04 cfm/ft^2
Water Resistance	8.25 psf
Structural Test Pressure	+67.5 psf -70.8 psf
Forced Entry Resistance	Grade 10

Reference should be made to Report No. 01-41135.01 dated 03/26/02 for complete test specimen description and data.

For ARCHITECTURAL TESTING, INC.

Mark A. Hess, Technician

MAH:nlb

Allen N. Reeves
1 APRIL 2002

ALLEN N. REEVES
CERTIFICATE
NO. 19079
STATE OF
FLORIDA
PROFESSIONAL ENGINEER

2

Architectural Testing

AAMA/NWWDA 101/I.S.2-97 TEST REPORT

Rendered to

MI HOME PRODUCTS, INC.
650 West Market Street
P.O. Box 370
Gratz, Pennsylvania 17030-0370

Report No: 01-41135.01
Test Date: 03/07/02
Report Date: 03/26/02
Expiration Date: 03/07/06

Project Summary: Architectural Testing, Inc. (ATI) was contracted by MI Home Products, Inc. to perform tests on Series/Model 650, aluminum picture window at their facility located in Elizabethville, Pennsylvania. The samples tested successfully met the performance requirements for a F-R45 60 x 80 rating.

Test Specification: The test specimen was evaluated in accordance with AAMA/NWWDA 101/I.S.2-97, *Voluntary Specifications for Aluminum, Vinyl (PVC) and Wood Windows and Glass Doors.*

Test Specimen Description

Series/Model: 650

Type: Aluminum Picture Window

Overall Size: 5' 0" wide by 6' 8" high

Daylight Opening Size: 4' 9-1/4" wide by 6' 5-1/4" high

Finish All aluminum was white.

Glazing Details: The test specimen utilized 7/8" thick, sealed insulating glass constructed from two sheets of 3/16" thick, clear annealed glass and a metal reinforced butyl spacer system. The glass was interior glazed against double-sided adhesive foam tape and secured with aluminum snap-in glazing beads.

130 Derry Court
York, PA 17402-9405
phone: 717.764.7700
fax: 717.764.4129
www.archtest.com

Allen M. Reeves
1 APR 02 2002

ALLEN M. REEVES
CERTIFICATE NO. 11234
STATE OF FLORIDA
PROFESSIONAL ENGINEER

Test Specimen Description: (Continued)

Frame Construction: The frame was constructed of extruded aluminum with coped, butted, and sealed corners fastened with two #8 x 1" screws through the head and sill into each jamb screw boss.

Reinforcement: No reinforcement was utilized.

Installation: The test specimen was installed into a 2 x 8 #2 Spruce-Pine-Fir wood test buck. #8 x 2-1/2" installation screws were utilized 18" on center around the interior perimeter. Polyurethane was utilized to seal the exterior.

Test Results:

The results are tabulated as follows:

Paragraph	Title of Test - Test Method	Results	Allowed
	Air Infiltration (ASTM E 283-91) @ 1.57 psf (25 mph)	0.04 cfm/ft^2	0.3 cfm/ft^2 max.

Note #1: The tested specimen meets the performance levels specified in AAMA/NWWDA 101/I.S. 2-97 for air infiltration.

	Water Resistance (ASTM E 547-00) WTP = 2.86 psf	No leakage	No leakage
2.1.4.1	Uniform Load Deflection (ASTM E 330-97) (Measurements reported were taken on the jamb) (Loads were held for 33 seconds)		
	@ 25.9 psf (positive)	0.01"	0.41" max.
	@ 34.7 psf (negative)	0.01"	0.41" max.
2.1.4.2	Uniform Load Structural (ASTM E 330-97) (Measurements reported were taken on the jamb) (Loads were held for 10 seconds)		
	@ 38.9 psf (positive)	0.0"	0.29" max.
	@ 52.1 psf (negative)	0.01"	0.29" max.

ALLEN H. REEVES
CERTIFICATE NO. 12356
STATE OF FLORIDA
PROFESSIONAL ENGINEER

Allen H. Reeves
1 APRIL 2002

Test Results: (Continued)

Paragraph	Title of Test - Test Method	Results	Allowed
	Forced Entry Resistance (ASTM F 588-97)		
	Type: D Grade: 10		
	Hand and Tool Manipulation Test	No entry	No entry
Optional Performance			
4.3	Water Resistance (ASTM E 547-00) WTP = 8.25 psf	No leakage	No leakage
	Uniform Load Deflection (ASTM E 330-97) (Measurements reported were taken on the jamb) (Loads were held for 33 seconds)		
	@ 45.0 psf (positive)	0.02"	0.41" max.
	@ 47.2 psf (negative)	0.02"	0.41" max.
	Uniform Load Structural (ASTM E 330-97) (Measurements reported were taken on the jamb) (Loads were held for 10 seconds)		
	@ 67.5 psf (positive)	0.01"	0.29" max.
	@ 70.8 psf (negative)	0.02"	0.29" max.

Detailed drawings, representative samples of the test specimen, and a copy of this report will be retained by ATI for a period of four years. The above results were secured by using the designated test methods and they indicate compliance with the performance requirements of the above referenced specification. This report does not constitute certification of this product, which may only be granted by the certification program administrator.

For ARCHITECTURAL TESTING, INC.

Mark A. Hess
Technician

MAH:nlb
01-41135.01

Allen N. Reeves, P.E.
Director - Engineering Services
1 APRIL 2002

ALLEN N. REEVES
CERTIFICATE
NO. 19284
STATE OF
FLORIDA
PROFESSIONAL ENGINEER

A

AAMA/NWWDA 101/I.S.2-97
TEST REPORT

Rendered to:

MI HOME PRODUCTS, INC.

SERIES/MODEL: 650
TYPE: Aluminum Triple Single Hung Window

Title of Test	Summary of Results
AAMA Rating	H-R35 112 x 72
Uniform Load Deflection Test Pressure	+35.3 psf -47.2 psf
Operating Force	25 lb max.
Air Infiltration	0.16 cfm/ft^2
Water Resistance Test Pressure	5.25 psf
Uniform Load Structural Test Pressure	+53.0 psf -52.5 psf
Deglazing	Passed
Forced Entry Resistance	Grade 10

Reference should be made to ATI Report No. 01-41641.01 for complete test specimen description and data.

Allen N. Reeves
7 JUNE 2002

ALLEN N. REEVES
P.E. 19254
STATE OF FLORIDA
PROFESSIONAL ENGINEER

B

Architectural Testing

AAMA/NWWDA 101/I.S.2-97 TEST REPORT

Rendered to

MI HOME PRODUCTS, INC.
P.O. Box 370
650 West Market Street
Gratz, Pennsylvania 17030-0370

Report No: 01-41641.01
Test Date: 05/13/02
And: 05/16/02
Report Date: 06/05/02
Expiration Date: 05/16/06

Project Summary: Architectural Testing, Inc. (ATI) was contracted by MI Home Products, Inc. to witness testing on a Series/Model 650, aluminum triple single hung window at their facility located in Elizabethville, Pennsylvania. The sample tested successfully met the performance requirements for a H-R35 112 x 72 rating.

Test Specification: The test specimen was evaluated in accordance with AAMA/NWWDA 101/I.S.2-97, *Voluntary Specifications for Aluminum, Vinyl (PVC) and Wood Windows and Glass Doors.*

Test Specimen Description:

Series/Model: 650

Type: Aluminum Triple Single Hung Window

Overall Size: 9' 3-1/2" wide by 5' 11-11/16" high

Active Sash Size (3): 3' 0-1/4" wide by 2' 10-3/4" high

Fixed Daylight Opening Size (3): 2' 8-1/4" wide by 2' 9-1/8" high

Screen Size (3): 2' 9-1/8" wide by 2' 11" high

Finish: All aluminum was painted white.

ALLEN N. REEVES
CERTIFICATE
NO. 19354
STATE OF
FLORIDA
PROFESSIONAL ENGINEER

Allen N. Reeves
7 JUNE 2002

130 Derry Court
York, PA 17402-9405
phone: 717.764.7700
fax: 717.764.4129
www.archtest.com

C

Test Specimen Description: (Continued)

Glazing Details: The active and fixed lites utilized 5/8" thick, sealed insulating glass constructed from two sheets of 1/8" thick, clear annealed glass and a metal reinforced butyl spacer system. The active sash was channel glazed utilizing a flexible vinyl wrap-around gasket. The fixed lite was interior glazed against double-sided adhesive foam tape and secured with PVC snap-in glazing beads.

Weatherstripping:

Description	Quantity	Location
0.230" high by 0.270" backed polypile with center fin	Row	Fixed meeting rail
0.250" high by 0.187" backed polypile with center fin	2 Rows	Active sash stiles
1/2" by 1/2" dust plug	4 Pieces	Active sash, top and bottom of stiles
1/4" foam filled vinyl bulb seal	1 Row	Active sash, bottom rail

Frame Construction: The frame was constructed of extruded aluminum with coped, butted, and sealed corners fastened with two #8 x 1" screws through the head and sill into each jamb screw boss. End caps were utilized on the ends of the fixed meeting rail and secured with two 1-1/4" screws per cap. The meeting rail was secured to the frame utilizing two 1-1/4" screws. The mullions were secured utilizing four #8 x 1-1/4" screws through the head and sill into the mullion screw boss.

Sash Construction: The sash was constructed of extruded aluminum with coped, butted, and sealed corners fastened with two #8 x 1-1/2" screws through the rails into each stiles' screw boss.

Screen Construction: The screen was constructed from roll-formed aluminum with keyed corners. The fiberglass mesh was secured with a flexible spline.

ALLEN N. REEVES
CERTIFICATE
NO. 19354
STATE OF
FLORIDA
PROFESSIONAL ENGINEER

Allen N. Reeves
7 June 2002

D

Test Specimen Description: (Continued)

Hardware:

Description	Quantity	Location
Metal cam lock with keeper	1	Midspan of each active meeting rail with adjacent keepers
Plastic tilt latch	2	Each active sash meeting rail ends
Metal tilt pin	2	Each active sash bottom rail ends
Balance assembly	2	Each active sash contained one in each jamb
Screen plunger	2	Each screen contained two 4" from rail ends on top rail

Drainage: Sloped sill

Reinforcement: No reinforcement was utilized.

Installation: The test specimen was installed into a 2 x 8 #2 Spruce-Pine-Fir wood buck with #8 x 1-5/8" drywall screws every 8" on center around the nail fin. Polyurethane was used as a sealant under the nail fin and around the exterior perimeter.

Test Results:

The results are tabulated as follows.

Paragraph	Title of Test - Test Method	Results	Allowed
2.2.1.6.1	Operating Force	25 lbs	30 lbs max.
	Air Infiltration (ASTM E 283-91) @ 1.57 psf (25 mph)	0.16 cfm/ft^2	0.3 cfm/ft^2 max.

Note #1: The tested specimen meets the performance levels specified in AAMA/NWWDA 101/I.S. 2-97 for air infiltration.

Water Resistance (ASTM E 547-00) (with and without screen) WTP = 2.86 psf	No leakage	No leakage

Allen N. Reeves
7 JUNE 2002

ALLEN N. REEVES
CERTIFICATE NO. 12361
STATE OF FLORIDA
PROFESSIONAL ENGINEER

E

Test Results: (Continued)

Paragraph	Title of Test - Test Method	Results	Allowed
2.1.4.1	Uniform Load Deflection (ASTM E 330-97)		
	(Measurements reported were taken on the mullion)		
	(Loads were held for 52 seconds)		
	@ 15.0 psf (positive)	0.15"	0.41" max.
	@ 15.0 psf (negative)	0.29"	0.41" max.
2.1.4.2	Uniform Load Structural (ASTM E 330-97)		
	(Measurements reported were taken on the mullion)		
	(Loads were held for 10 seconds)		
	@ 22.5 psf (positive)	0.01"	0.29" max.
	@ 22.5 psf (negative)	0.01"	0.29" max.
2.2. .6.2	Deglazing Test (ASTM E 987-88)		
	In operating direction at 70 lbs		
	Right sash, meeting rail	0.12"/25%	0.50"/100%
	Right sash, bottom rail	0.12"/25%	0.50"/100%
	Middle sash, meeting rail	0.12"/25%	0.50"/100%
	Middle sash, bottom rail	0.12"/25%	0.50"/100%
	Left sash, meeting rail	0.12"/25%	0.50"/100%
	Left sash, bottom rail	0.12"/25%	0.50"/100%
	In remaining direction at 50 lbs		
	Right sash, right stile	0.06"/12%	0.50"/100%
	Right sash, left stile	0.06"/12%	0.50"/100%
	Middle sash, right stile	0.06"/12%	0.50"/100%
	Middle sash, left stile	0.06"/12%	0.50"/100%
	Left sash, right stile	0.06"/12%	0.50"/100%
	Left sash, left stile	0.06"/12%	0.50"/100%
2 .8	Forced Entry Resistance (ASTM F 588-97)		
	Type: A		
	Grade: 10		
	Lock Manipulation Test	No entry	No entry
	Test A1 through A5	No entry	No entry
	Test A7	No entry	No entry
	Lock Manipulation Test	No entry	No entry

Allen N. Reeves
7 JUNE 2002

ALLEN N. REEVES
CERTIFICATE NO. 13854
STATE OF FLORIDA
PROFESSIONAL ENGINEER

F

Test Results: (Continued)

Paragraph	Title of Test - Test Method	Results	Allowed
Optional Performance			
4.3	Water Resistance (ASTM E 547-00) (with and without screen) WTP = 5.25 psf	No leakage	No leakage
	Uniform Load Deflection (ASTM E 330-97) (Measurements reported were taken on the mullion) (Loads were held for 52 seconds)		
	@ 35.3 psf (positive)	0.46"*	0.41" max
	@ 47.2 psf (negative)	0.67"*	0.41" max

**Exceeds L/175 for deflection, but meets all other test requirements.*

	Uniform Load Structural (ASTM E 330-97) (Measurements reported were taken on the mullion) (Loads were held for 10 seconds)		
	@ 53.0 psf (positive)	0.03"	0.29" max
	@ 52.5 psf (negative)	0.02"	0.29" max

Detailed drawings, representative samples of the test specimen, and a copy of this report will be retained by ATI for a period of four years. The above results were secured by using the designated test methods and they indicate compliance with the performance requirements of the above referenced specification. This report does not constitute certification of this product, which may only be granted by the certification program administrator.

For ARCHITECTURAL TESTING, INC.

Mark A. Hess
Technician

Allen N. Reeves, P.E.
Director - Engineering Services
7 JUNE 2002

ALLEN N. REEVES
CERTIFICATE NO. 19384
STATE OF FLORIDA
PROFESSIONAL ENGINEER

MAH:nlb
01-41641.01

XX
Glazed Outswing Unit

COP-WL-JH4162-02

WOOD-EDGE STEEL DOORS

APPROVED ARRANGEMENT:

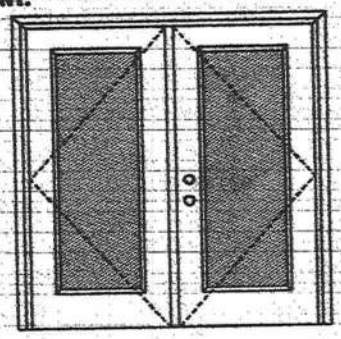

Note:
Units of other sizes are covered by this report as long as the panels used do not exceed 3'0" x 6'8".

Double Door
Maximum unit size = 6'0" x 6'8"

Design Pressure
+40.5/-40.5
Limited water unless special threshold design is used.

Large Missile Impact Resistance
Hurricane protective system (shutters) is REQUIRED.

Actual design pressure and impact resistant requirements for a specific building design and geographic location is determined by ASCE 7-national, state or local building codes specify the edition required.

MINIMUM ASSEMBLY DETAIL:

Compliance requires that minimum assembly details have been followed – see MAD-WL-MA0012-02 and MAD-WL-MA0041-02.

MINIMUM INSTALLATION DETAIL:

Compliance requires that minimum installation details have been followed – see MID-WL-MA0002-02.

APPROVED DOOR STYLES:

1/4 GLASS:


100 Series


133, 135 Series


136 Series


680 Series


822 Series

1/2 GLASS:


105 Series*


106, 160 Series*

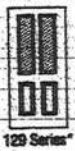
129 Series*


200 Series*


12 R/L, 23 R/L, 24 R/L Series*

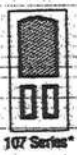
107 Series*


108 Series


304 Series

*This glass kit may also be used in the following door styles: 5-panel; 5-panel with scroll; Eyebrow 5-panel; Eyebrow 5-panel with scroll.

Johnson™ EntrySystems

March 29, 2002
Our continuing program of product improvement makes specifications, design and product detail subject to change without notice.

PREMDOR Collection Premium Quality Doors

Exclusively from Masonite®
Masonite International Corporation

XX
Glazed Outswing Unit

COP-WL-JH4162-02

WOOD-EDGE STEEL DOORS

APPROVED DOOR STYLES:

3/4 GLASS:

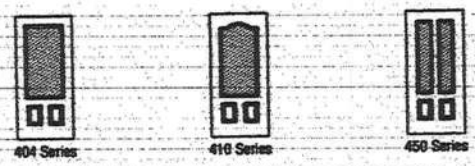

FULL GLASS:

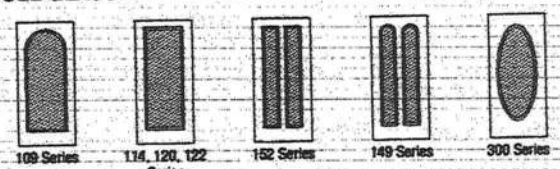

CERTIFIED TEST REPORTS:

NCTL 210-1897-7, 8, 9, 10, 11, 12; NCTL 210-1864-5, 6, 7, 8; NCTL 210-2178-1, 2, 3

Certifying Engineer and License Number: Barry D. Portney, P.E. / 16258.

Unit Tested in Accordance with Miami-Dade BCCO PA202.

Evaluation report NCTL-210-2794-1

Door panels constructed from 26-gauge 0.017" thick steel skins. Both stiles constructed from wood. Top end rails constructed of 0.041" steel. Bottom end rails constructed of 0.021" steel. Interior cavity of slab filled with rigid polyurethane foam core. Slab glazed with insulated glass mounted in a rigid plastic lip lite surround.

Frame constructed of wood with an extruded aluminum bumper threshold.

PRODUCT COMPLIANCE LABELING:

TESTED IN
ACCORDANCE WITH
MIAMI-DADE BCCO PA202

COMPANY NAME
CITY, STATE

To the best of my knowledge and ability the above side-hinged exterior door unit conforms to the requirements of the 2001 Florida Building Code, Chapter 17 (Structural Tests and Inspections).

Kurt L Balthazor

State of Florida, Professional Engineer
Kurt Balthazor, P.E. – License Number 56533

Johnson EntrySystems

March 29, 2002
Our continuing program of product improvement makes specifications, design and product detail subject to change without notice.

PREMDOR Collection Premium Quality Doors

Exclusively from Masonite
Masonite International Corporation

GLASS INSERT IN DOOR OR SIDELITE PANEL

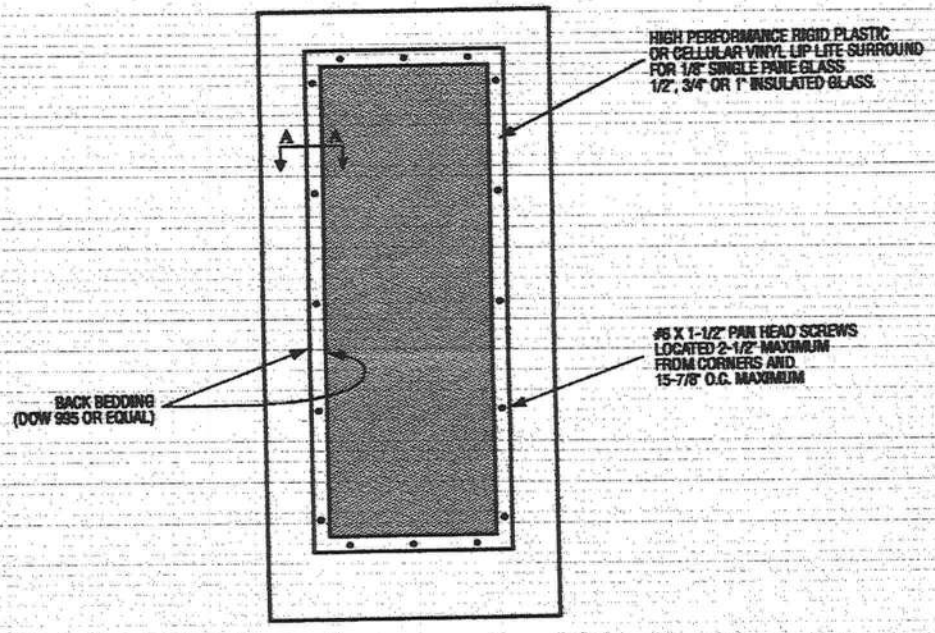

SECTION A-A
TYPICAL RIGID PLASTIC LIP LITE SURROUND

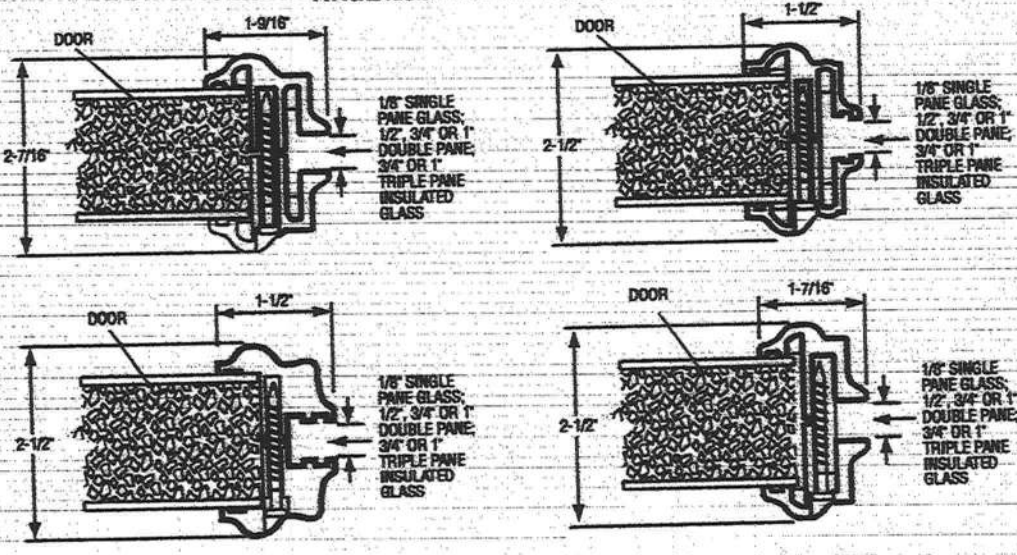

PREMDOR Collection Premium Quality Doors
Exclusively from Masonite
Masonite International Corporation

March 29, 2002
Our continuing program of product improvement makes specifications, design and product detail subject to change without notice.

TAMKO®
ROOFING PRODUCTS

FEB - 4 REC'D

January 31, 2002

TO: OUR FLORIDA CUSTOMERS:

Effective February 1, 2002, the following TAMKO shingles, as manufactured at TAMKO's Tuscaloosa, Alabama, facility, comply with ASTM D-3161, Type I modified to 110 mph. Testing was conducted using four nails per shingle. These shingles also comply with Florida Building Code TAS 100 for wind driven rain.

- Glass-Seal AR
- Elite Glass-Seal AR
- ASTM Heritage 30 AR (formerly ASTM Heritage 25 AR)
- Heritage 40 AR (formerly Heritage 30 AR)
- Heritage 50 AR (formerly Heritage 40 AR)

All testing was performed by Florida State certified independent labs.

Please direct all questions to TAMKO's Technical Services Department at 1-800-641-4691.

TAMKO Roofing Products, Inc.

CORPORATE HEADQUARTERS
220 W. FOURTH STREET P.O. BOX 1404 JOPLIN, MO 64802-1404 800-641-4691 FAX 800-641-1925

TAMKO®
ROOFING PRODUCTS

Application Instructions For Heritage® 25 Series Shingles

SPECIFICATIONS (APPROX.)	
Length	37"
Width	12"
Bundles per Sq.	3
Shingles per Sq.	78
Shingles per Bundle	26
Coverage per Sq. (Sq. Ft.)	100
Exposure	5"

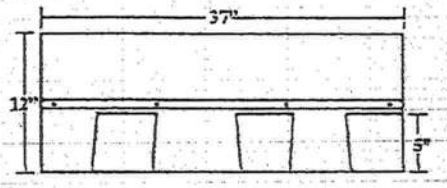

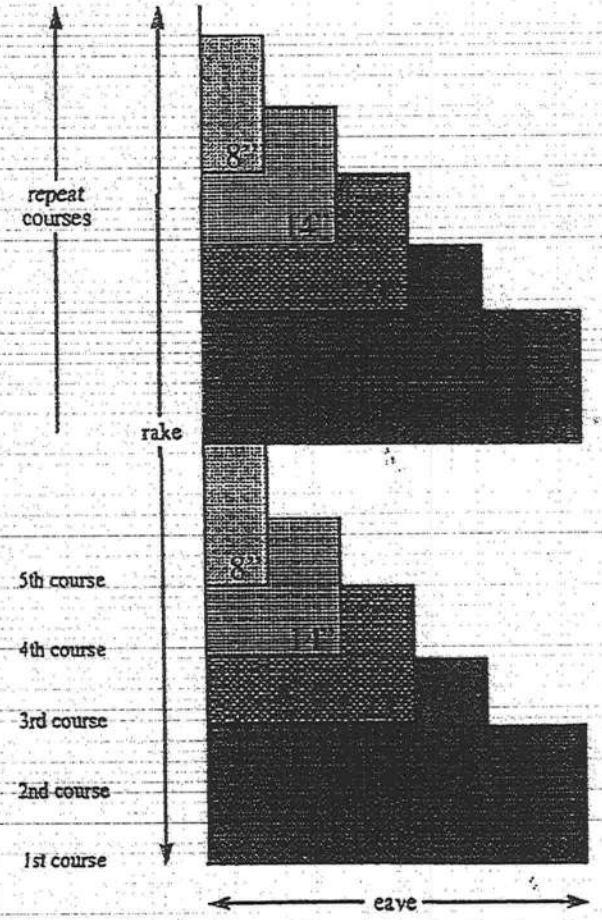

The 4 cuts in the first 10 courses:

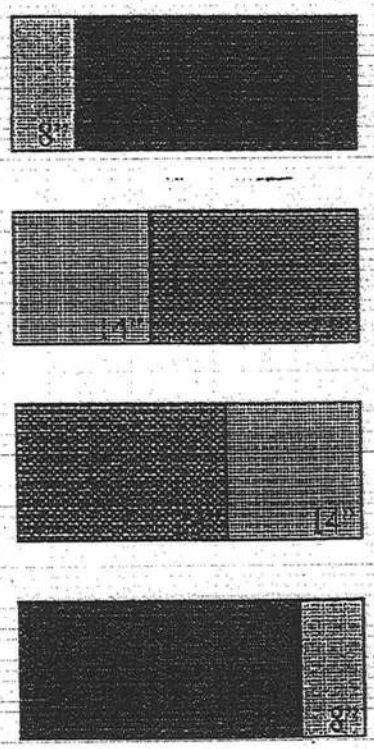

In the first 10 courses, there are 4 cuts and no waste.

When you reach the other side of the roof, whatever has to be trimmed off can be used in the field of roofing.

For additional application information consult the application instructions printed on the product package.

NOTE: These application instructions apply only to Heritage 25 and Heritage 25 AR shingles.

TAMKO®
ROOFING PRODUCTS

Application Instructions for

• Glass-Seal • Elite Glass-Seal®
• Glass-Seal AR • Elite Glass-Seal® AR

THREE-TAB ASPHALT SHINGLES

THESE ARE THE MANUFACTURER'S APPLICATION INSTRUCTIONS FOR THE ROOFING CONDITIONS DESCRIBED. TAMKO ROOFING PRODUCTS, INC. ASSUMES NO RESPONSIBILITY FOR LEAKS OR OTHER ROOFING DEFECTS RESULTING FROM FAILURE TO FOLLOW THE MANUFACTURER'S INSTRUCTIONS.
THIS PRODUCT IS COVERED BY A LIMITED WARRANTY, THE TERMS OF WHICH ARE PRINTED ON THE WRAPPER.
IN COLD WEATHER (BELOW 40°F), CARE MUST BE TAKEN TO AVOID DAMAGE TO THE EDGES AND CORNERS OF THE SHINGLES.

IMPORTANT: It is not necessary to remove the plastic strip from the back of the shingles.

1. ROOF DECK

These shingles are for application to roof decks capable of receiving and retaining fasteners, and to inclines of not less than 2 in. per foot. For roofs having pitches 2 in. per foot to less than 4 in. per foot, refer to special instructions titled "Low Slope Application". Shingles must be applied properly. TAMKO assumes no responsibility for leaks or defects resulting from improper application, or failure to properly prepare the surface to be roofed over.

NEW ROOF DECK CONSTRUCTION: Roof deck must be smooth, dry and free from warped surfaces. It is recommended that metal drip edges be installed at eaves and rakes.

PLYWOOD: All plywood shall be exterior grade as defined by the American Plywood Association. Plywood shall be a minimum of 3/8 in. thickness and applied in accordance with the recommendations of the American Plywood Association.

SHEATHING BOARDS: Boards shall be well-seasoned tongue-and-groove boards and not over 6 in. nominal width. Boards shall be a 1 in. nominal minimum thickness. Boards shall be properly spaced and nailed.

2. VENTILATION

Inadequate ventilation of attic spaces can cause accumulation of moisture in winter months and a build up of heat in the summer. These conditions can lead to:

1. Vapor Condensation
2. Buckling of shingles due to deck movement.
3. Rotting of wood members.
4. Premature failure of roof.

To insure adequate ventilation and circulation of air, place louvers of sufficient size high in the gable ends and/or install continuous ridge and soffit vents.
FHA minimum property standards require one square foot of net free ventilation area to each 150 square feet of space to be vented, or one square foot per 300 square feet if a vapor barrier is installed on the warm side of the ceiling or if at least one half of the ventilation is provided near the ridge. If the ventilation openings are screened, the total area should be doubled.

IT IS PARTICULARLY IMPORTANT TO PROVIDE ADEQUATE VENTILATION.

3. FASTENING

NAILS: TAMKO recommends the use of nails as the preferred method of application.
WIND CAUTION: Extreme wind velocities can damage these shingles after application when proper sealing of the shingles does not occur. This can especially be a problem if the shingles are applied in cooler months or in areas on the roof that do not receive direct sunlight. These conditions may impede the sealing of the adhesive strips on the shingles. The inability to seal down may be compounded by prolonged cold weather conditions and/or blowing dust. In these situations, hand sealing of the shingles is recommended. Shingles must also be fastened according to the fastening instructions described below.

Correct placement of the fasteners is critical to the performance of the shingle. If the fasteners are not placed as shown in the diagram and described below, TAMKO will not be responsible for any shingles blown off or displaced. TAMKO will not be responsible for damage to shingles caused by winds or gusts exceeding gale force. Gale force shall be the standard as defined by the U.S. Weather Bureau.

FASTENING PATTERNS: Fasteners must be placed above or below the factory applied sealant in an area between 5-1/2" and 6-3/4" from the butt edge of the shingle. Fasteners should be located horizontally according to the diagram below. Do not nail into the sealant. TAMKO recommends nailing below the sealant whenever possible for greater wind resistance.

1) Standard Fastening Pattern. (For use on decks with slopes 2 in. per foot to 21 in. per foot.) One fastener 1 in. back from each end and one 12 in. back from each end of the shingle for a total of 4 fasteners. (See standard fastening pattern illustrated below).

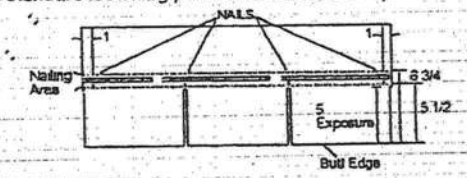

2) Mansard or High Wind Fastening Pattern. (For use on decks with slopes greater than 21 in. per foot.) One fastener 1 in. back from each end and one fastener 10-1/2 in. back from each end and one fastener 13-1/2 in. back from each end for a total of 6 fastener per shingle. (See Mansard fastening pattern illustrated below.)

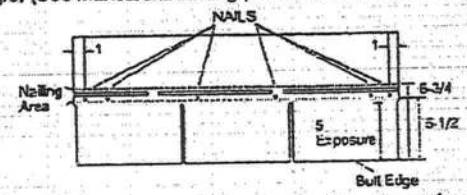

NAILS: TAMKO recommends the use of nails as the preferred method of application. Standard type roofing nails should be used. Nail shanks should be made of minimum 12-gauge wire, and a minimum head diameter of 3/8 in. Nails should be long enough to penetrate 3/4 in.

(Continued)

(CONTINUED from Pg. 2)

with quick setting asphalt adhesive cement immediately upon installation. Spots of cement must be equivalent in size to a $.25 piece and applied to shingles with a 5 in. exposure, use 6 fasteners per shingle. See Section 3 for the Mansard Fastening Pattern.

3. RE-ROOFING

Before re-roofing, be certain to inspect the roof decks. All plywood shall meet the requirements listed in Section 1.

Nail down or remove curled or broken shingles from the existing roof. Replace all missing shingles with new ones to provide a smooth base. Shingles that are buckled usually indicate warped decking or protruding nails. Hammer down all protruding nails or remove them and refasten in a new location. Remove all drip edge metal and replace with new.

If re-roofing over an existing roof where new flashing is required to protect against ice dams (freeze/thaw cycle of water and/or the backup of water in frozen or clogged gutters), remove the old roofing to a point at least 24 in. beyond the interior wall line and apply TAMKO's Moisture Guard Plus® waterproofing underlayment. Contact TAMKO's Technical Services Department for more information.

The nesting procedure described below is the preferred method for re-roofing over square tab strip shingles with a 5 in. exposure.

Starter Course: Begin by using TAMKO Shingle Starter or by cutting shingles into 5 x 36 inch strips. This is done by removing the 5 in. tabs from the bottom and approximately 2 in. from the top of the shingles so that the remaining portion is the same width as the exposure of the old shingles. Apply the starter piece so that the self-sealing adhesive lies along the eaves and is even with the existing roof. The starter strip should be wide enough to overhang the eaves and carry water into the gutter. Remove 3 in. from the length of the first starter shingle to ensure that the joints from the old roof do not align with the new.

First Course: Cut off approximately 2 in. from the bottom edge of the shingles so that the shingles fit beneath the existing third course and align with the edge of the starter strip. Start the first course with a full 36 in. long shingle and fasten according to the instructions printed in Section 3.

Second and Succeeding Courses: According to the off-set application method you choose to use, remove the appropriate length from the rake end of the first shingle in each succeeding course. Place the top edge of the new shingle against the butt edge of the old shingles in the courses above. The full width shingle used on the second course will reduce the exposure of the first course to 3 in. The remaining courses will automatically have a 5 in. exposure.

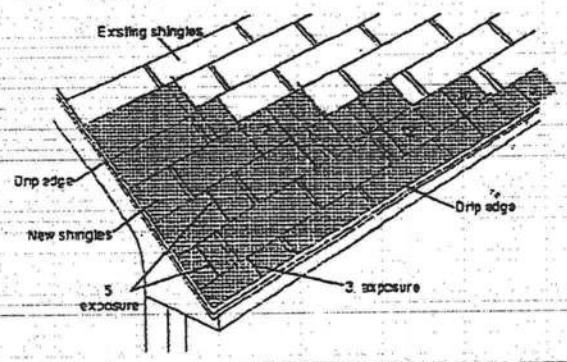

3. VALLEY APPLICATION

Over the shingle underlayment, center a 36 in. wide sheet of TAMKO Nail-Fast® or a minimum 50 lb. roll roofing in the valley. Nail the felt only where necessary to hold it in place and then only nail the outside edges.

IMPORTANT: PRIOR TO INSTALLATION WARM SHINGLES TO PREVENT DAMAGE WHICH CAN OCCUR WHILE BENDING SHINGLES TO FORM VALLEY.

- Apply the first course of shingles along the eaves of one of the intersecting roof planes and across the valley.

Note: For proper flow of water over the trimmed shingle, always start applying the shingles on the roof plane that has the lower slope or less height.

- Extend the end shingle at least 12 in. onto the adjoining roof. Apply succeeding courses in the same manner, extending them across the valley and onto the adjoining roof.
- Do not trim if the shingle length exceeds 12 in. Lengths should vary.
- Press the shingles tightly into the valley.
- Use normal shingle fastening methods.

Note: No fastener should be within 6 in. of the valley centerline, and two fasteners should be placed at the end of each shingle crossing the valley.

- To the adjoining roof plane, apply one row of shingles extending it over previously applied shingles and trim a minimum of 2 in. back from the centerline of the valley.

Note: For a neater installation, snap a chalkline over the shingles for guidance.

- Clip the upper corner of each shingle at a 45-degree angle and embed the end of the shingle in a 3 in. wide strip of asphalt plastic cement. This will prevent water from penetrating between the courses by directing it into the valley.

- ***CAUTION:*** *Adhesive must be applied in smooth, thin, even layers.*

Excessive use of adhesive will cause blistering to this product.

TAMKO assumes no responsibility for blistering.

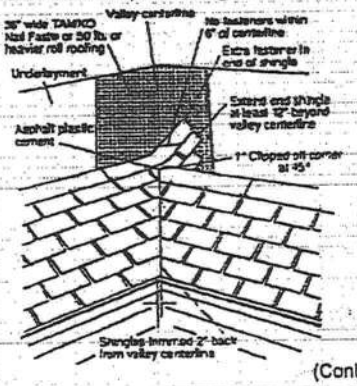

(Continued)

(CONTINUED from Pg. 3)

TAMKO® ROOFING PRODUCTS

• Glass-Seal • Glass-Seal AR • Elite Glass-Seal® • Elite Glass-Seal® AR

THREE-TAB ASPHALT SHINGLES

FOR ALTERNATE VALLEY APPLICATION METHODS, PLEASE CONTACT TAMKO'S TECHNICAL SERVICES DEPARTMENT.

10. HIP AND RIDGE FASTENING DETAIL

Apply the shingles with a 5 in. exposure beginning at the bottom of the hip or from the end of the ridge opposite the direction of the prevailing winds. Secure each shingle with one fastener 5-1/2 in. back from the exposed end and 1 in. up from the edge. Do not nail directly into the sealant.

TAMKO recommends the use of TAMKO Hip & Ridge shingle products. Where matching colors are available, it is acceptable to use TAMKO's Glass-Seal or Elite Glass-Seal shingles cut down to 12 in. pieces.

NOTE: AR type shingle products should be used as Hip & Ridge on Glass-Seal AR and Elite Glass-Seal AR shingles.

Fasteners should be 1/4 in. longer than the one used for shingles.

IMPORTANT: PRIOR TO INSTALLATION, CARE NEEDS TO BE TAKEN TO PREVENT DAMAGE WHICH CAN OCCUR WHILE BENDING SHINGLES IN COOL WEATHER.

THESE ARE THE MANUFACTURER'S APPLICATION INSTRUCTIONS FOR THE ROOFING CONDITIONS DESCRIBED. TAMKO ROOFING PRODUCTS, INC. ASSUMES NO RESPONSIBILITY FOR LEAKS OR OTHER ROOFING DEFECTS RESULTING FROM FAILURE TO FOLLOW THE MANUFACTURER'S INSTRUCTIONS.

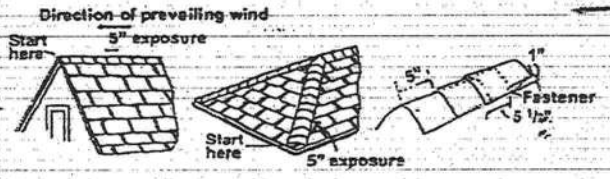

THIS PRODUCT IS COVERED BY A LIMITED WARRANTY. THE TERMS OF WHICH ARE PRINTED ON THE WRAPPER.

IMPORTANT - READ CAREFULLY BEFORE OPENING BUNDLE

In this paragraph "You" and "Your" refer to the installer of the shingles and the owner of the building on which these shingles will be installed. This is a legally binding agreement between You and TAMKO Roofing Products, Inc. ("TAMKO"). By opening this bundle You agree: (a) to install the shingles strictly in accordance with the instructions printed on this wrapper; or (b) that shingles which are not installed strictly in accordance with the instructions printed on this wrapper are sold "AS IS" and are not covered by the limited warranty that is also printed on this wrapper, or any other warranty, including, but not limited to (except where prohibited by law) implied warranties of MERCHANTABILITY and FITNESS FOR USE.

Visit Our Web Site at
www.tamko.com

Central District	220 West 4th St., Joplin, MO 64801	800-641-4691
Northeast District	4500 Tamko Dr., Frederick, MD 21701	800-368-2055
Southeast District	2300 35th St., Tuscaloosa, AL 35401	800-228-2656
Southwest District	7910 S. Central Exp., Dallas, TX 75216	800-443-1834
Western District	5300 East 43rd Ave., Denver, CO 80216	800-530-8868

07/01

I

AAMA/NWWDA 101/I.S.2-97
TEST REPORT SUMMARY

Rendered to:

MI HOME PRODUCTS, INC.

SERIES/MODEL: 650 Fin
TYPE: Aluminum Single Hung Window

Title of Test	Results
Rating	H-R40 52 x 72
Overall Design Pressure	+45.0 psf -47.2 psf
Operating Force	11 lb max.
Air Infiltration	0.13 cfm/ft^2
Water Resistance	6.00 psf
Structural Test Pressure	+67.5 psf -70.8 psf
Deglazing	Passed
Forced Entry Resistance	Grade 10

Reference should be made to Report No. 01-41134.01 dated 03/26/02 for complete test specimen description and data.

For ARCHITECTURAL TESTING, INC.

Mark A. Hess, Technician

MAH:nlb

ALLEN M. REEVES
LICENSE
NO. 18354
STATE OF
FLORIDA
PROFESSIONAL ENGINEER

1 APRIL 2002

II

Architectural Testing

AAMA/NWWDA 101/I.S.2-97 TEST REPORT

Rendered to

MI HOME PRODUCTS, INC.
650 West Market Street
P.O. Box 370
Gratz, Pennsylvania 17030-0370

Report No: 01-41134.01
Test Date: 03/07/02
Report Date: 03/26/02
Expiration Date: 03/07/06

Project Summary: Architectural Testing, Inc. (ATI) was contracted by MI Home Products, Inc. to perform tests on Series/Model 650 Fin, aluminum single hung window at their facility located in Elizabethville, Pennsylvania. The samples tested successfully met the performance requirements for a H-R40 52 x 72 rating.

Test Specification: The test specimen was evaluated in accordance with AAMA/NWWDA 101/I.S.2-97, *Voluntary Specifications for Aluminum, Vinyl (PVC) and Wood Windows and Glass Doors.*

Test Specimen Description:

Series/Model: 650 Fin

Type: Aluminum Single Hung Window

Overall Size: 4' 4-1/4" wide by 6' 0-3/8" high

Active Sash Size: 4' 1-3/4" wide by 3' 0-5/8" high

Daylight Opening Size: 3' 11-3/8" wide by 2' 9-1/2" high

Screen Size: 4' 0-1/4" wide by 2' 11-1/8" high

Finish: All aluminum was white.

Glazing Details: The active and fixed lites utilized 5/8" thick, sealed insulating glass constructed from two sheets of 1/8" thick, clear annealed glass and a metal reinforced butyl spacer system. The active sash was channel glazed utilizing a flexible vinyl wrap-around gasket. The fixed lite was interior glazed against double-sided adhesive foam tape and secured with PVC snap-in glazing beads.

130 Derry Court
York, PA 17402-9405
phone: 717.764.7700
fax: 717.764.4129
www.archtest.com

Allen M. Reeves
1 APRIL 2002

ALLEN M. REEVES
LICENSE
NO. 12354
STATE OF
FLORIDA
PROFESSIONAL ENGINEER

III

Test Specimen Description: (Continued)

Weatherstripping:

Description	Quantity	Location
0.230" high by 0.270" backed polypile with center fin	1 Row	Fixed meeting rail
0.250" high by 0.187" backed polypile with center fin	2 Rows	Active sash stiles
1/2" x 1/2" dust plug	4 Pieces	Active sash, top and bottom of stiles
1/4" foam-filled vinyl bulb seal	1 Row	Active sash, bottom rail

Frame Construction: The frame was constructed of extruded aluminum with coped, butted, and sealed corners fastened with two #8 x 1" screws through the head and sill into each jamb screw boss. End caps were utilized on the ends of the fixed meeting rail and secured with two 1-1/4" screws per cap. Meeting rail was secured to the frame utilizing two 1-1/4" screws.

Sash Construction: The sash was constructed of extruded aluminum with coped, butted, and sealed corners fastened with two #8 x 1-1/2" screws through the rails into each jamb screw boss.

Screen Construction: The screen was constructed from roll-formed aluminum with keyed corners. The fiberglass mesh was secured with a flexible spline.

Hardware:

Description	Quantity	Location
Metal cam lock with keeper		Midspan, active meeting rail with keeper adjacent on fixed meeting rail
Plastic tilt latch	2	Active sash, meeting rail ends
Metal tilt pin	2	Active sash, bottom rail ends
Balance assembly	2	One in each jamb
Screen plunger	2	4" from rail ends on top rail

ALLEN N. REEVES
CERTIFICATE NO. 19354
STATE OF FLORIDA
PROFESSIONAL ENGINEER

Allen N. Reeves
1 APRIL 2002

IV

Test Specimen Description: (Continued)

Drainage: Sloped sill

Reinforcement: No reinforcement was utilized.

Installation: The test specimen was installed into a 2 x 8 #2 Spruce-Pine-Fir wood test buck with #8 x 1-5/8" drywall screws every 8" on center around the nail fin. Polyurethane was used as a sealant under the nail fin and around the exterior perimeter.

Test Results:

The results are tabulated as follows:

Paragraph	Title of Test - Test Method	Results	Allowed
2.2.1.6.1	Operating Force	11 lbs	30 lbs max
	Air Infiltration (ASTM E 283-91) @ 1.57 psf (25 mph)	0.13 cfm/ft^2	0.3 cfm/ft^2 max

Note #1: The tested specimen meets the performance levels specified in AAMA/NWWDA 101/I.S. 2-97 for air infiltration.

	Water Resistance (ASTM E 547-00) (with and without screen) WTP = 2.86 psf	No leakage	No leakage
2.1.4.1	Uniform Load Deflection (ASTM E 330-97) (Measurements reported were taken on the meeting rail) (Loads were held for 33 seconds)		
	@ 25.9 psf (positive)	0.42"*	0.26" max.
	@ 34.7 psf (negative)	0.43"*	0.26" max.

**Exceeds L/175 for deflection, but passes all other test requirements.*

2.1.4.2	Uniform Load Structural (ASTM E 330-97) (Measurements reported were taken on the meeting rail) (Loads were held for 10 seconds)		
	@ 38.9 psf (positive)	0.02"	0.18" max.
	@ 52.1 psf (negative)	0.02"	0.18" max.

Allen H. Reeves
1 APRIL 2002

ALLEN H. REEVES
CERTIFICATE
NO. 18377
STATE OF
FLORIDA
PROFESSIONAL ENGINEER

Test Specimen Description: (Continued)

Paragraph	Title of Test - Test Method	Results	Allowed
2.2.1.6.2	Deglazing Test (ASTM E 987)		
	In operating direction at 70 lbs		
	Meeting rail	0.12"/25%	0.50"/100%
	Bottom rail	0.12"/25%	0.50"/100%
	In remaining direction at 50 lbs		
	Left stile	0.06"/12%	0.50"/100%
	Right stile	0.06"/12%	0.50"/100%
	Forced Entry Resistance (ASTM F 588-97)		
	Type: A		
	Grade: 10		
	Lock Manipulation Test	No entry	No entry
	Tests A1 through A5	No entry	No entry
	Test A7	No entry	No entry
	Lock Manipulation Test	No entry	No entry
Optional Performance			
4.3	Water Resistance (ASTM E 547-00) (with and without screen) WTP = 6.00 psf	No leakage	No leakage
	Uniform Load Deflection (ASTM E 330-97) (Measurements reported were taken on the meeting rail) (Loads were held for 33 seconds)		
	@ 45.0 psf (positive)	0.47"*	0.26" max.
	@ 47.2 psf (negative)	0.46"*	0.26" max.

**Exceeds L/175 for deflection, but passes all other test requirements.*

	Uniform Load Structural (ASTM E 330-97) (Measurements reported were taken on the meeting rail) (Loads were held for 10 seconds)		
	@ 67.5 psf (positive)	0.05"	0.18" max.
	@ 70.8 psf (negative)	0.05"	0.18" max.

Allen N. Reeves
1 APRIL 2002

ALLEN N. REEVES
CERTIFICATE
No. 18354
STATE OF
FLORIDA
PROFESSIONAL ENGINEER

VI

Detailed drawings, representative samples of the test specimen, and a copy of this report will be retained by ATI for a period of four years. The above results were secured by using the designated test methods and they indicate compliance with the performance requirements of the above referenced specification. This report does not constitute certification of this product, which may only be granted by the certification program administrator.

For ARCHITECTURAL TESTING, INC:

Mark A. Hess
Technician

Allen N. Reeves, P.E.
Director - Engineering Services
1 APRIL 2002

MAH:nlb
01-41134.01

ALLEN N. REEVES
CERTIFICATE
NO. 1[illegible]
STATE OF
FLORIDA
PROFESSIONAL ENGINEER

Premdor Entry Systems

ACCEPTANCE No.: 01-0314.18

APPROVED : JUN 05 2001

EXPIRES : April 02, 2006

NOTICE OF ACCEPTANCE: STANDARD CONDITIONS

1. Renewal of this Acceptance (approval) shall be considered after a renewal application has been filed and the original submitted documentation, including test supporting data, engineering documents, are no older than eight (8) years.

2. Any and all approved products shall be permanently labeled with the manufacturer's name, city, state, and the following statement: "Miami-Dade County Product Control Approved", or as specifically stated in the specific conditions of this Acceptance.

3. Renewals of Acceptance will not be considered if:
   a. There has been a change in the South Florida Building Code affecting the evaluation of this product and the product is not in compliance with the code changes.
   b. The product is no longer the same product (identical) as the one originally approved.
   c. If the Acceptance holder has not complied with all the requirements of this acceptance, including the correct installation of the product.
   d. The engineer who originally prepared, signed and sealed the required documentation initially submitted, is no longer practicing the engineering profession.

4. Any revision or change in the materials, use, and/or manufacture of the product or process shall automatically be cause for termination of this Acceptance, unless prior written approval has been requested (through the filing of a revision application with appropriate fee) and granted by this office.

5. Any of the following shall also be grounds for removal of this Acceptance:
   a. Unsatisfactory performance of this product or process.
   b. Misuse of this Acceptance as an endorsement of any product, for sales, advertising or any other purposes.

6. The Notice of Acceptance number preceded by the words Miami-Dade County, Florida, and followed by the expiration date may be displayed in advertising literature. If any portion of the Notice of Acceptance is displayed, then it shall be done in its entirety.

7. A copy of this Acceptance as well as approved drawings and other documents, where it applies, shall be provided to the user by the manufacturer or its distributors and shall be available for inspection at the job site at all time. The engineer needs not reseal the copies.

8. Failure to comply with any section of this Acceptance shall be cause for termination and removal of Acceptance.

9. This Notice of Acceptance consists of pages 1, 2 and this last page 3.

END OF THIS ACCEPTANCE

Manuel Perez

Manuel Perez, P.E., Product Control Examiner
Product Control Division

Premdor Entry Systems

ACCEPTANCE No.: 01-0314.18

APPROVED : JUN 05 2001

EXPIRES : April 02, 2006

NOTICE OF ACCEPTANCE: SPECIFIC CONDITIONS

1. **SCOPE**

1.1 This renews the Notice of Acceptance No. 00-0321.20 which was issued on April 28, 2000. It approves a residential insulated door, as described in Section 2 of this Notice of Acceptance, designed to comply with the South Florida Building Code (SFBC), 1994 Edition for Miami-Dade County, for the locations where the pressure requirements, as determined by SFBC Chapter 23, do not exceed the Design Pressure Rating values indicated in the approved drawings.

2. **PRODUCT DESCRIPTION**

2.1 The **Series Entergy 6-8 S-W/E Inswing Opaque Single Residential Insulated Steel Door** with **Sidelites- Impact Resistant Door Slab** Only and its components shall be constructed in strict compliance with the following documents: Drawing No **31-1020-EW-1**, Sheets 1 through 6 of 6, titled "Premdor (Entergy Brand) Wood Edge Single Door in Wood Frames with a Bumper Threshold (Inswing)," prepared by manufacturer, dated 7/29/97 with revision C dated 01/15/01, bearing the Miami-Dade County Product Control approval stamp with the Notice of Acceptance number and approval date by the Miami-Dade County Product Control Division. These documents shall hereinafter be referred to as the approved drawings.

3. **LIMITATIONS**

3.1 This approval applies to single unit applications of single door only, as shown in approved drawings.

3.2 Unit shall be installed only at locations protected by a canopy or overhang such that the angle between the edge of canopy or overhang to sill is less than 45 degrees. Unless unit is installed in non-habitable areas where the unit and the area are designed to accept water infiltration.

4. **INSTALLATION**

4.1 The residential insulated steel door and its components shall be installed in strict compliance with the approved drawings.

4.2 Hurricane protection system (shutters):

4.2.1 Door: the installation of this unit will not require a hurricane protection system.

4.2.2 Sidelite: the installation of this unit will require a hurricane protection system.

5. **LABELING**

5.1 Each unit shall bear a permanent label with the manufacturer's name or logo, city, state and following statement: "Miami-Dade County Product Control Approved".

6. **BUILDING PERMIT REQUIREMENTS**

6.1 Application for building permit shall be accompanied by copies of the following:

6.1.1 This Notice of Acceptance

6.1.2 Duplicate copies of the approved drawings, as identified in Section 2 of this Notice of Acceptance, clearly marked to show the components selected for the proposed installation.

6.1.3 Any other documents required by the Building Official or the South Florida Building Code (SFBC) in order to properly evaluate the installation of this system.

Manuel Perez

Manuel Perez, P.E. Product Control Examiner
Product Control Division

From: The Columbia County Building Department
Plans Review
135 NE Hernando Av.
P. O Box 1529
Lake City Florida, 32056-1529

Reference to: Build permit application Number: 0512-02

Simque Home Owner/Builder Simque Home 387 SW Kemp Court

On the date of December 2, 2005 application 0512-02 and plans for construction of a single family dwelling were reviewed and the following information or alteration to the plans will be required to continue processing this application. If you should have any question please contact the above address, or contact phone number (386) 758-1163 or fax any information to (386) 754-7088.

Please include application number 0512-02 when making reference to this application.

1. Please submit a letter form the potable water well contractor which will describe the equipment to be used to supply potable water to this dwelling. Include the size of pump motor, size of pressure tank and cycle stop valve if used.
2. Please show compliance with the FRC-2004 section R308.4 Hazardous locations: Glazing in doors and enclosures for hot tubs, whirlpools, saunas, steam rooms, bathtubs and showers. Glazing in any part of a building wall enclosing these compartments where the bottom exposed edge of the glazing is less than 60 inches (1524 mm) measured vertically above any standing or walking surface.
3. Please show on the foundation plans the locations of the foundation description (F sections foundation designs by Mr. Disosway Sheet S-1).

4. On the R-1 dormer plan show the material type and lumber size, to be used for construction of the dormers. The required anchoring devices and there location and attachment requirement.
5. On the electrical plan show the location of the required smoke alarms in the master bedroom.
6. On the electrical plan show the location of the electrical panel and the amperage rating of the panel.

Thank you,

Joe Haltiwanger
Plan Examiner
Columbia County Building Department

Aaron Dingle Holmes Parcel H Suzanne S/D

COLUMBIA COUNTY BUILDING DEPARTMENT

RESIDENTIAL MINIMUM PLAN REQUIREMENTS AND CHECKLIST FOR FLORIDA BUILDING CODE 2001
ONE (1) AND TWO (2) FAMILY DWELLINGS

ALL REQUIREMENTS ARE SUBJECT TO CHANGE

EFFECTIVE MARCH 1, 2002

ALL BUILDING PLANS MUST INDICATE THE FOLLOWING ITEMS AND INDICATE COMPLIANCE WITH CHAPTER 1606 OF THE FLORIDA BUILDING CODE 2001 BY PROVIDING CALCULATIONS AND DETAILS THAT HAVE THE SEAL AND SIGNATURE OF A CERTIFIED ARCHITECT OR ENGINEER REGISTERED IN THE STATE OF FLORIDA, OR ALTERNATE METHODOLOGIES, APPROVED BY THE STATE OF FLORIDA BUILDING COMMISSION FOR ONE-AND-TWO FAMILY DWELLINGS. FOR DESIGN PURPOSES THE FOLLOWING BASIC WIND SPEED AS PER FIGURE 1606 SHALL BE USED.

WIND SPEED LINE SHALL BE DEFINED AS FOLLOWS: THE CENTERLINE OF INTERSTATE 75.

1. ALL BUILDINGS CONSTRUCTED EAST OF SAID LINE SHALL BE ------- 100 MPH
2. ALL BUILDINGS CONSTRUCTED WEST OF SAID LINE SHALL BE -------110 MPH
3. NO AREA IN COLUMBIA COUNTY IS IN A WIND BORNE DEBRIS REGION

APPLICANT – PLEASE CHECK ALL APPLICABLE BOXES BEFORE SUBMITTAL

GENERAL REQUIREMENTS: Two (2) complete sets of plans containing the following:

Applicant	Plans Examiner	
☑	☐	All drawings must be clear, concise and drawn to scale ("Optional " details that are not used shall be marked void or crossed off). Square footage of different areas shall be shown on plans.
☑	☐	Designers name and signature on document (FBC 104.2.1). If licensed architect or engineer, official seal shall be affixed.
☑	☐	**Site Plan including:** a) Dimensions of lot b) Dimensions of building set backs c) Location of all other buildings on lot, well and septic tank if applicable, and all utility easements. d) Provide a full legal description of property.
☑	☐	**Wind-load Engineering Summary, calculations and any details required** a) Plans or specifications must state compliance with FBC Section 1606 b) The following information must be shown as per section 1606.1.7 FBC a. Basic wind speed (MPH) b. Wind importance factor (I) and building category c. Wind exposure – if more than one wind exposure is used, the wind exposure and applicable wind direction shall be indicated d. The applicable internal pressure coefficient e. Components and Cladding. The design wind pressure in terms of psf (kN/m²), to be used for the design of exterior component and cladding materials not specifally designed by the registered design professional
☑	☐	**Elevations including:**
☑	☐	a) All sides
☑	☐	b) Roof pitch
☑	☐	c) Overhang dimensions and detail with attic ventilation
☑	☐	d) Location, size and height above roof of chimneys
☑	☐	e) Location and size of skylights
☑	☐	f) Building height
☑	☐	e) Number of stories

Floor Plan including:

a) Rooms labeled and dimensioned

b) Shear walls

c) Windows and doors (including garage doors) showing size, mfg., approval listing and attachment specs. (FBC 1707) and safety glazing where needed (egress windows in bedrooms to be shown) See NOTE 2

d) Fireplaces (gas appliance) (vented or non-vented) or wood burning with hearth

e) Stairs with dimensions (width, tread and riser) and details of guardrails and handrails

f) Must show and identify accessibility requirements (accesssable bathroom)

Foundation Plan including:

a) Location of all load-bearing wall with required footings indicated as standard Or monolithic and dimensions and reinforcing See NOTE 3

b) All posts and/or column footing including size and reinforcing

c) Any special support required by soil analysis such as piling

d) Location of any vertical steel

Roof System:

a) Truss package including:

1. Truss layout and truss details signed and sealed by Fl. Pro. Eng.
2. Roof assembly (FBC 104.2.1 Roofing system, materials, manufacturer, fastening requirements and product evaluation with wind resistance rating)

b) Conventional Framing Layout including:

1. Rafter size, species and spacing
2. Attachment to wall and uplift
3. Ridge beam sized and valley framing and support details
4. Roof assembly (FBC 104.2.1 Roofing systems, materials, manufacturer, fastening requirements and product evaluation with wind resistance rating)

Wall Sections including:

a) Masonry wall

1. All materials making up wall
2. Block size and mortar type with size and spacing of reinforcement
3. Lintel, tie-beam sizes and reinforcement
4. Gable ends with rake beams showing reinforcement or gable truss and wall bracing details
5. All required connectors with uplift rating and required number and size of fasteners for continuous tie from roof to foundation
6. Roof assembly shown here or on roof system detail (FBC 104.2.1 Roofing system, materials, manufacturer, fastening requirements and product evaluation with resistance rating)
7. Fire resistant construction (if required)
8. Fireproofing requirements
9. Shoe type of termite treatment (termiticide or alternative method)
10. Slab on grade
    a. Vapor retarder (6mil. Polyethylene with joints lapped 6 inches and sealed)
    b. Must show control joints, synthetic fiber reinforcement or Welded fire fabric reinforcement and supports
11. Indicate where pressure treated wood will be placed
12. Provide insulation R value for the following:
    a. Attic space
    b. Exterior wall cavity
    c. Crawl space (if applicable)

b) Wood frame wall

1. All materials making up wall
2. Size and species of studs
3. Sheathing size, type and nailing schedule
4. Headers sized
5. Gable end showing balloon framing detail or gable truss and wall hinge bracing detail
6. All required fasteners for continuous tie from roof to foundation (truss anchors, straps, anchor bolts and washers)
7. Roof assembly shown here or on roof system detail (FBC104.2.1 Roofing system, materials, manufacturer, fastening requirements and product evaluation with wind resistance rating)
8. Fire resistant construction (if applicable)
9. Fireproofing requirements
10. Show type of termite treatment (termiticide or alternative method)
11. Slab on grade
    a. Vapor retarder (6Mil. Polyethylene with joints lapped 6 inches and sealed
    b. Must show control joints, synthetic fiber reinforcement or welded wire fabric reinforcement and supports
12. Indicate where pressure treated wood will be placed
13. Provide insulation R value for the following:
    a. Attic space
    b. Exterior wall cavity
    c. Crawl space (if applicable)

c) Metal frame wall and roof (designed, signed and sealed by Florida Prof. Engineer or Architect)

Floor Framing System:

a) Floor truss package including layout and details, signed and sealed by Florida Registered Professional Engineer

b) Floor joist size and spacing

c) Girder size and spacing

d) Attachment of joist to girder

e) Wind load requirements where applicable

Plumbing Fixture layout

Electrical layout including:

a) Switches, outlets/receptacles, lighting and all required GFCI outlets identified

b) Ceiling fans

c) Smoke detectors

See NOTE 5

d) Service panel and sub-panel size and location(s)

e) Meter location with type of service entrance (overhead or underground)

f) Appliances and HVAC equipment

HVAC information

a) Manual J sizing equipment or equivalent computation

b) Exhaust fans in bathroom

Energy Calculations (dimensions shall match plans)

Gas System Type (LP or Natural) Location and BTU demand of equipment

Disclosure Statement for Owner Builders

Notice Of Commencement

Private Potable Water

a) Size of pump motor

b) Size of pressure tank

c) Cycle stop valve if used

Parcel A

23952

MiTek Industries, Inc.
14515 North Outer Forty Drive
Suite 300
Chesterfield, MO 63017-5746
Telephone 314/434-1200
Fax 314/434-5343

Re: 8833
SIMQUE HOMES

The truss drawing(s) referenced below have been prepared by MiTek Industries, Inc. under my direct supervision based on the parameters provided by Reese Building Components, Inc.

Pages or sheets covered by this seal: I9388120 thru I9388149

My license renewal date for the state of Florida is February 28, 2007.

Juan Garcia, FL Lic #58521
MiTek Industries, Inc
14515 North Outer Forty Drive
Suite 300
Chesterfield, MO, 63017
FL Cert.#6634

November 14,2005

Garcia, Juan

The seal on these drawings indicate acceptance of professional engineering responsibility solely for the truss components shown. The suitability and use of this component for any particular building is the responsibility of the building designer, per ANSI/TPI-1995 Sec. 2.

Job	Truss	Truss Type	Qty	Ply	SIMQUE HOMES
8833	CJ7	ROOF TRUSS	2	1	I9388120 Job Reference (optional)

Reese Building Components, INC., Sylvester Ga. 6.200 s Oct 18 2005 MiTek Industries, Inc. Fri Nov 11 13:30:38 2005 Page 1

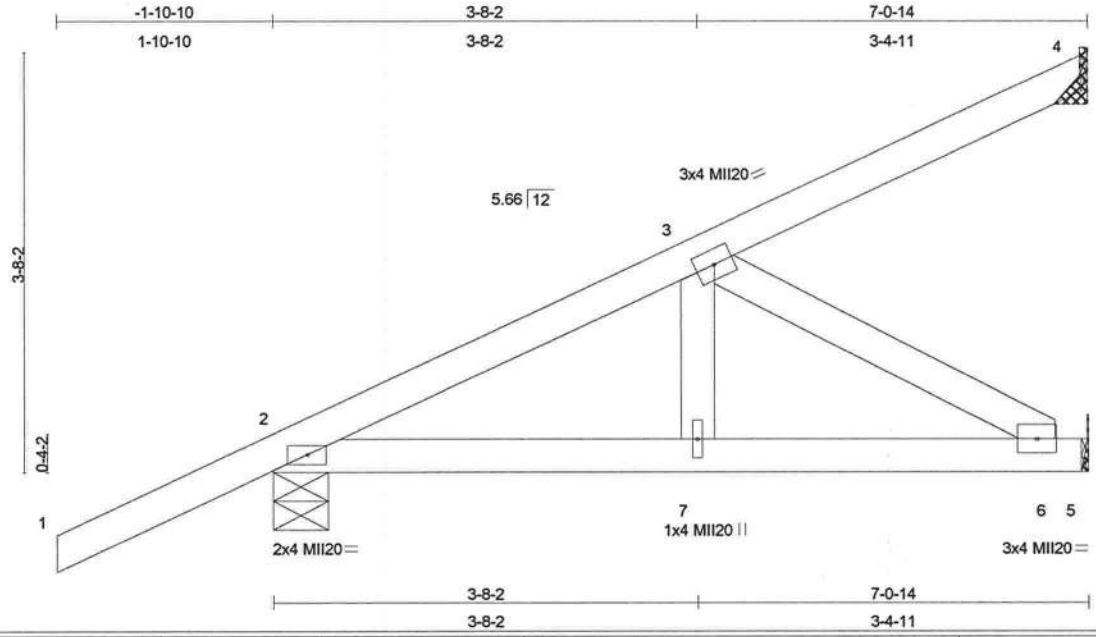

LOADING (psf)		SPACING	2-0-0	CSI		DEFL	in	(loc)	l/defl	L/d	PLATES	GRIP
TCLL	20.0	Plates Increase	1.25	TC	0.36	Vert(LL)	0.01	6-7	>999	360	MII20	249/190
TCDL	10.0	Lumber Increase	1.25	BC	0.15	Vert(TL)	-0.01	6-7	>999	240		
BCLL	0.0	Rep Stress Incr	NO	WB	0.07	Horz(TL)	0.00	5	n/a	n/a		
BCDL	10.0	Code FBC2001/ANSI95		(Matrix)							Weight: 33 lb	

LUMBER
TOP CHORD 2 X 4 SYP No.2
BOT CHORD 2 X 4 SYP No.2
WEBS 2 X 4 SYP No.3

BRACING
TOP CHORD Sheathed or 6-0-0 oc purlins.
BOT CHORD Rigid ceiling directly applied or 10-0-0 oc bracing.

REACTIONS (lb/size) 4=136/Mechanical, 2=315/0-5-11, 5=163/Mechanical
Max Horz 2=228(load case 4)
Max Uplift4=-146(load case 4), 2=-179(load case 4), 5=-33(load case 4)

FORCES (lb) - Maximum Compression/Maximum Tension
TOP CHORD 1-2=0/48, 2-3=-289/0, 3-4=-81/43
BOT CHORD 2-7=-103/230, 6-7=-103/230, 5-6=0/0
WEBS 3-7=0/85, 3-6=-265/119

This truss design is based upon the building code shown. This code has been specified by the project engineer/architect, or building designer. The applicability of this code in any particular jurisdiction should be confirmed with the building official prior to truss fabrication. This determination is not the responsibility of the component/truss designer.

NOTES
1) Wind: ASCE 7-98; 110mph (3-second gust); h=15ft; TCDL=5.0psf; BCDL=5.0psf; Category II; Exp C; enclosed; MWFRS gable end zone; cantilever left and right exposed ; end vertical left and right exposed; Lumber DOL=1.33 plate grip DOL=1.33.
2) Refer to girder(s) for truss to truss connections.
3) Provide mechanical connection (by others) of truss to bearing plate capable of withstanding 146 lb uplift at joint 4, 179 lb uplift at joint 2 and 33 lb uplift at joint 5.
4) In the LOAD CASE(S) section, loads applied to the face of the truss are noted as front (F) or back (B).

LOAD CASE(S) Standard
1) Regular: Lumber Increase=1.25, Plate Increase=1.25
Uniform Loads (plf)
Vert: 1-2=-60
Trapezoidal Loads (plf)
Vert: 2=-4(F=28, B=28)-to-4=-106(F=-23, B=-23), 2=-0(F=10, B=10)-to-5=-35(F=-8, B=-8)

Juan Garcia, FL Lic #58521
MiTek Industries, Inc.
14515 North Outer Forty Drive
Suite 300
Chesterfield, MO, 63017
FL Cert.#6634

November 14,2005

WARNING - Verify design parameters and READ NOTES ON THIS AND REVERSE SIDE BEFORE USE.
Design valid for use only with MiTek connectors. This design is based only upon parameters shown, and is for an individual building component. Applicability of design parameters and proper incorporation of component is responsibility of building designer - not truss designer. Bracing shown is for lateral support of individual web members only. Additional temporary bracing to insure stability during construction is the responsibility of the erector. Additional permanent bracing of the overall structure is the responsibility of the building designer. For general guidance regarding fabrication, quality control, storage, delivery, erection and bracing, consult ANSI/TPI1 Quality Criteria, DSB-89 and BCSI1 Building Component Safety Information available from Truss Plate Institute, 583 D'Onofrio Drive, Madison, WI 53719.

14515 N. Outer Forty,
Suite #300
Chesterfield, MO 63017

MiTek®

Symbols

PLATE LOCATION AND ORIENTATION

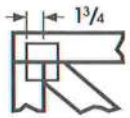

*Center plate on joint unless x,y offsets are indicated. Dimensions are in ft-in-sixteenths. Apply plates to both sides of truss and securely seat.

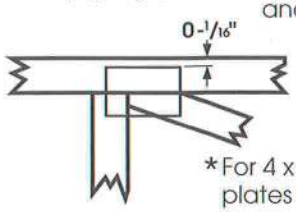

*For 4 x 2 orientation, locate plates 0 - 1/16" from outside edge of truss.

*This symbol indicates the required direction of slots in connector plates.

*** Plate location details available in MiTek 20/20 software or upon request.**

PLATE SIZE

4 x 4 — The first dimension is the width perpendicular to slots. Second dimension is the length parallel to slots.

LATERAL BRACING

Indicated by symbol shown and/or by text in the bracing section of the output. Use T, I or Eliminator bracing if indicated.

BEARING

Indicates location where bearings (supports) occur. Icons vary but reaction section indicates joint number where bearings occur.

Industry Standards:

ANSI/TPI1: National Design Specification for Metal Plate Connected Wood Truss Construction.
DSB-89: Design Standard for Bracing.
BCSI1: Building Component Safety Information, Guide to Good Practice for Handling, Installing & Bracing of Metal Plate Connected Wood Trusses.

Numbering System

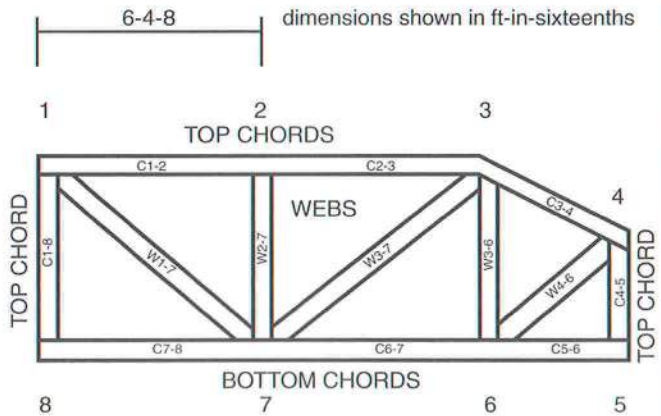

JOINTS ARE GENERALLY NUMBERED/LETTERED CLOCKWISE AROUND THE TRUSS STARTING AT THE JOINT FARTHEST TO THE LEFT.

CHORDS AND WEBS ARE IDENTIFIED BY END JOINT NUMBERS/LETTERS.

CONNECTOR PLATE CODE APPROVALS

BOCA	96-31, 95-43, 96-20-1, 96-67, 84-32
ICBO	4922, 5243, 5363, 3907
SBCCI	9667, 9730, 9604B, 9511, 9432A

MiTek®

TEE-LOK®

⚠General Safety Notes

Failure to Follow Could Cause Property Damage or Personal Injury

1. Additional stability bracing for truss system, e.g. diagonal or X-bracing, is always required. See BCSI1.
2. Never exceed the design loading shown and never stack materials on inadequately braced trusses.
3. Provide copies of this truss design to the building designer, erection supervisor, property owner and all other interested parties.
4. Cut members to bear tightly against each other.
5. Place plates on each face of truss at each joint and embed fully. Knots and wane at joint locations are regulated by ANSI/TPI1.
6. Design assumes trusses will be suitably protected from the environment in accord with ANSI/TPI1.
7. Unless otherwise noted, moisture content of lumber shall not exceed 19% at time of fabrication.
8. Unless expressly noted, this design is not applicable for use with fire retardant or preservative treated lumber.
9. Camber is a non-structural consideration and is the responsibility of truss fabricator. General practice is to camber for dead load deflection.
10. Plate type, size, orientation and location dimensions shown indicate minimum plating requirements.
11. Lumber used shall be of the species and size, and in all respects, equal to or better than that specified.
12. Top chords must be sheathed or purlins provided at spacing shown on design.
13. Bottom chords require lateral bracing at 10 ft. spacing, or less, if no ceiling is installed, unless otherwise noted.
14. Connections not shown are the responsibility of others.
15. Do not cut or alter truss member or plate without prior approval of a professional engineer.
16. Install and load vertically unless indicated otherwise.

© 2004 Mitek®

Job	Truss	Truss Type	Qty	Ply	SIMQUE HOMES
8833	CJ9	ROOF TRUSS	4	1	I9388121 Job Reference (optional)

Reese Building Components, INC., Sylvester Ga. 6.200 s Oct 18 2005 MiTek Industries, Inc. Fri Nov 11 13:30:38 2005 Page 1

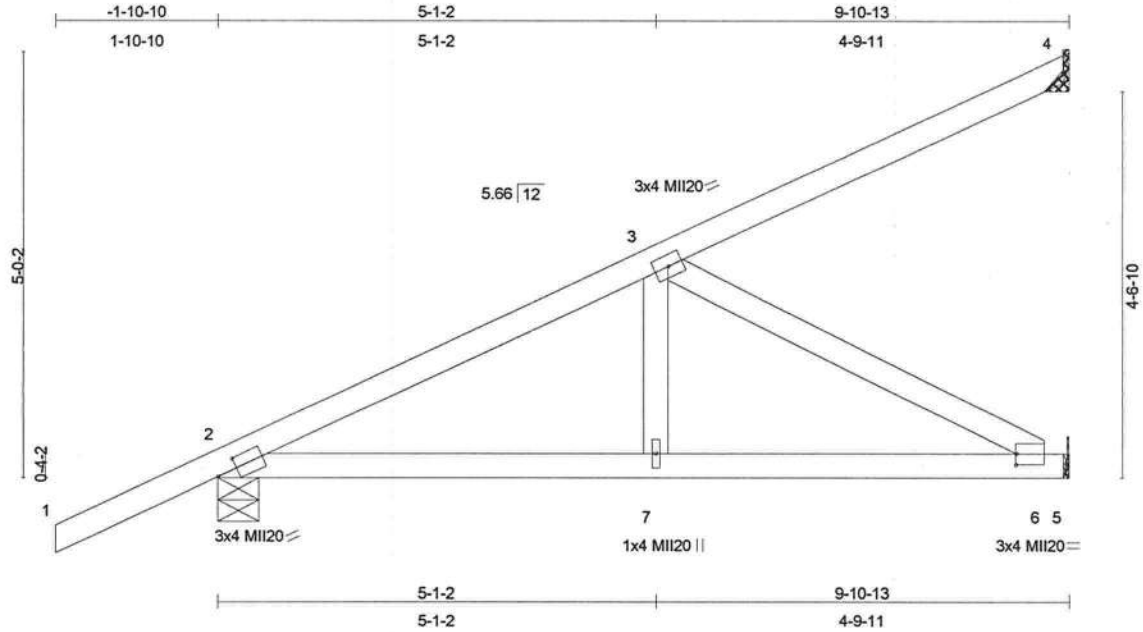

Plate Offsets (X,Y): [2:0-2-13,0-1-8], [6:0-0-2,0-1-8]

LOADING (psf)		SPACING	2-0-0	CSI		DEFL	in	(loc)	l/defl	L/d	PLATES	GRIP
TCLL	20.0	Plates Increase	1.25	TC	0.50	Vert(LL)	0.03	6-7	>999	360	MII20	249/190
TCDL	10.0	Lumber Increase	1.25	BC	0.37	Vert(TL)	-0.07	6-7	>999	240		
BCLL	0.0	Rep Stress Incr	NO	WB	0.30	Horz(TL)	0.01	5	n/a	n/a		
BCDL	10.0	Code FBC2001/ANSI95		(Matrix)							Weight: 45 lb	

LUMBER
TOP CHORD 2 X 4 SYP No.2
BOT CHORD 2 X 4 SYP No.2
WEBS 2 X 4 SYP No.3

BRACING
TOP CHORD Sheathed or 6-0-0 oc purlins.
BOT CHORD Rigid ceiling directly applied or 10-0-0 oc bracing.

REACTIONS (lb/size) 4=253/Mechanical, 2=471/0-5-11, 5=366/Mechanical
Max Horz 2=404(load case 4)
Max Uplift4=-280(load case 4), 2=-195(load case 4), 5=-136(load case 4)

FORCES (lb) - Maximum Compression/Maximum Tension
TOP CHORD 1-2=0/47, 2-3=-635/30, 3-4=-157/79
BOT CHORD 2-7=-341/549, 6-7=-341/549, 5-6=0/0
WEBS 3-7=0/147, 3-6=-623/388

This truss design is based upon the building code shown. This code has been specified by the project engineer/architect, or building designer. The applicability of this code in any particular jurisdiction should be confirmed with the building official prior to truss fabrication. This determination is not the responsibility of the component/truss designer.

NOTES
1) Wind: ASCE 7-98; 110mph (3-second gust); h=15ft; TCDL=5.0psf; BCDL=5.0psf; Category II; Exp C; enclosed; MWFRS gable end zone; cantilever left and right exposed ; end vertical left and right exposed; Lumber DOL=1.33 plate grip DOL=1.33.
2) Refer to girder(s) for truss to truss connections.
3) Provide mechanical connection (by others) of truss to bearing plate capable of withstanding 280 lb uplift at joint 4, 195 lb uplift at joint 2 and 136 lb uplift at joint 5.
4) In the LOAD CASE(S) section, loads applied to the face of the truss are noted as front (F) or back (B).

LOAD CASE(S) Standard
1) Regular: Lumber Increase=1.25, Plate Increase=1.25
Uniform Loads (plf)
Vert: 1-2=-60
Trapezoidal Loads (plf)
Vert: 2=-4(F=28, B=28)-to-4=-148(F=-44, B=-44), 2=-0(F=10, B=10)-to-5=-49(F=-15, B=-15)

Juan Garcia, FL Lic #58521
MiTek Industries, Inc.
14515 North Outer Forty Drive
Suite 300
Chesterfield, MO, 63017
FL Cert.#6634

November 14,2005

WARNING - Verify design parameters and READ NOTES ON THIS AND REVERSE SIDE BEFORE USE.
Design valid for use only with MiTek connectors. This design is based only upon parameters shown, and is for an individual building component. Applicability of design parameters and proper incorporation of component is responsibility of building designer - not truss designer. Bracing shown is for lateral support of individual web members only. Additional temporary bracing to insure stability during construction is the responsibility of the erector. Additional permanent bracing of the overall structure is the responsibility of the building designer. For general guidance regarding fabrication, quality control, storage, delivery, erection and bracing, consult ANSI/TPI1 Quality Criteria, DSB-89 and BCSI1 Building Component Safety Information available from Truss Plate Institute, 583 D'Onofrio Drive, Madison, WI 53719.

14515 N. Outer Forty,
Suite #300
Chesterfield, MO 63017

MiTek®

Symbols

PLATE LOCATION AND ORIENTATION

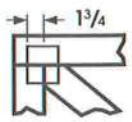

*Center plate on joint unless x,y offsets are indicated. Dimensions are in ft-in-sixteenths. Apply plates to both sides of truss and securely seat.

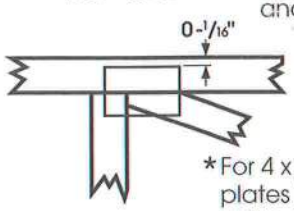

*For 4 x 2 orientation, locate plates 0 - 1/16" from outside edge of truss.

*This symbol indicates the required direction of slots in connector plates.

*** Plate location details available in MiTek 20/20 software or upon request.**

PLATE SIZE

4 x 4 — The first dimension is the width perpendicular to slots. Second dimension is the length parallel to slots.

LATERAL BRACING

Indicated by symbol shown and/or by text in the bracing section of the output. Use T, I or Eliminator bracing if indicated.

BEARING

Indicates location where bearings (supports) occur. Icons vary but reaction section indicates joint number where bearings occur.

Industry Standards:

ANSI/TPI1: National Design Specification for Metal Plate Connected Wood Truss Construction.
DSB-89: Design Standard for Bracing.
BCSI1: Building Component Safety Information, Guide to Good Practice for Handling, Installing & Bracing of Metal Plate Connected Wood Trusses.

Numbering System

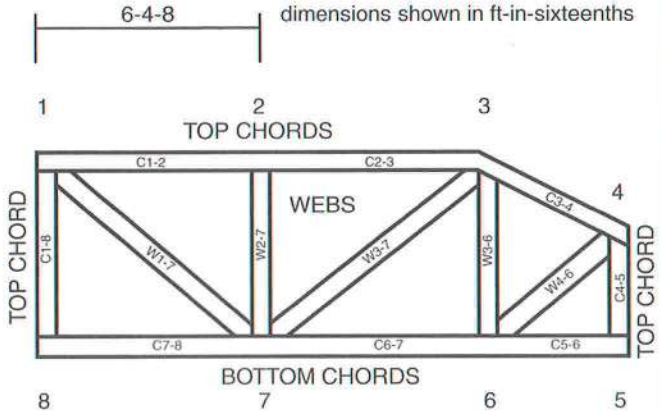

JOINTS ARE GENERALLY NUMBERED/LETTERED CLOCKWISE AROUND THE TRUSS STARTING AT THE JOINT FARTHEST TO THE LEFT.

CHORDS AND WEBS ARE IDENTIFIED BY END JOINT NUMBERS/LETTERS.

CONNECTOR PLATE CODE APPROVALS

BOCA	96-31, 95-43, 96-20-1, 96-67, 84-32
ICBO	4922, 5243, 5363, 3907
SBCCI	9667, 9730, 9604B, 9511, 9432A

MiTek®

TEE-LOK®

⚠General Safety Notes

Failure to Follow Could Cause Property Damage or Personal Injury

1. Additional stability bracing for truss system, e.g. diagonal or X-bracing, is always required. See BCSI1.
2. Never exceed the design loading shown and never stack materials on inadequately braced trusses.
3. Provide copies of this truss design to the building designer, erection supervisor, property owner and all other interested parties.
4. Cut members to bear tightly against each other.
5. Place plates on each face of truss at each joint and embed fully. Knots and wane at joint locations are regulated by ANSI/TPI1.
6. Design assumes trusses will be suitably protected from the environment in accord with ANSI/TPI1.
7. Unless otherwise noted, moisture content of lumber shall not exceed 19% at time of fabrication.
8. Unless expressly noted, this design is not applicable for use with fire retardant or preservative treated lumber.
9. Camber is a non-structural consideration and is the responsibility of truss fabricator. General practice is to camber for dead load deflection.
10. Plate type, size, orientation and location dimensions shown indicate minimum plating requirements.
11. Lumber used shall be of the species and size, and in all respects, equal to or better than that specified.
12. Top chords must be sheathed or purlins provided at spacing shown on design.
13. Bottom chords require lateral bracing at 10 ft. spacing, or less, if no ceiling is installed, unless otherwise noted.
14. Connections not shown are the responsibility of others.
15. Do not cut or alter truss member or plate without prior approval of a professional engineer.
16. Install and load vertically unless indicated otherwise.

© 2004 Mitek®

Job	Truss	Truss Type	Qty	Ply	SIMQUE HOMES
8833	H1	ROOF TRUSS	1	2	I9388122 Job Reference (optional)

Reese Building Components, INC., Sylvester Ga. 6.200 s Oct 18 2005 MiTek Industries, Inc. Fri Nov 11 13:30:39 2005 Page 1

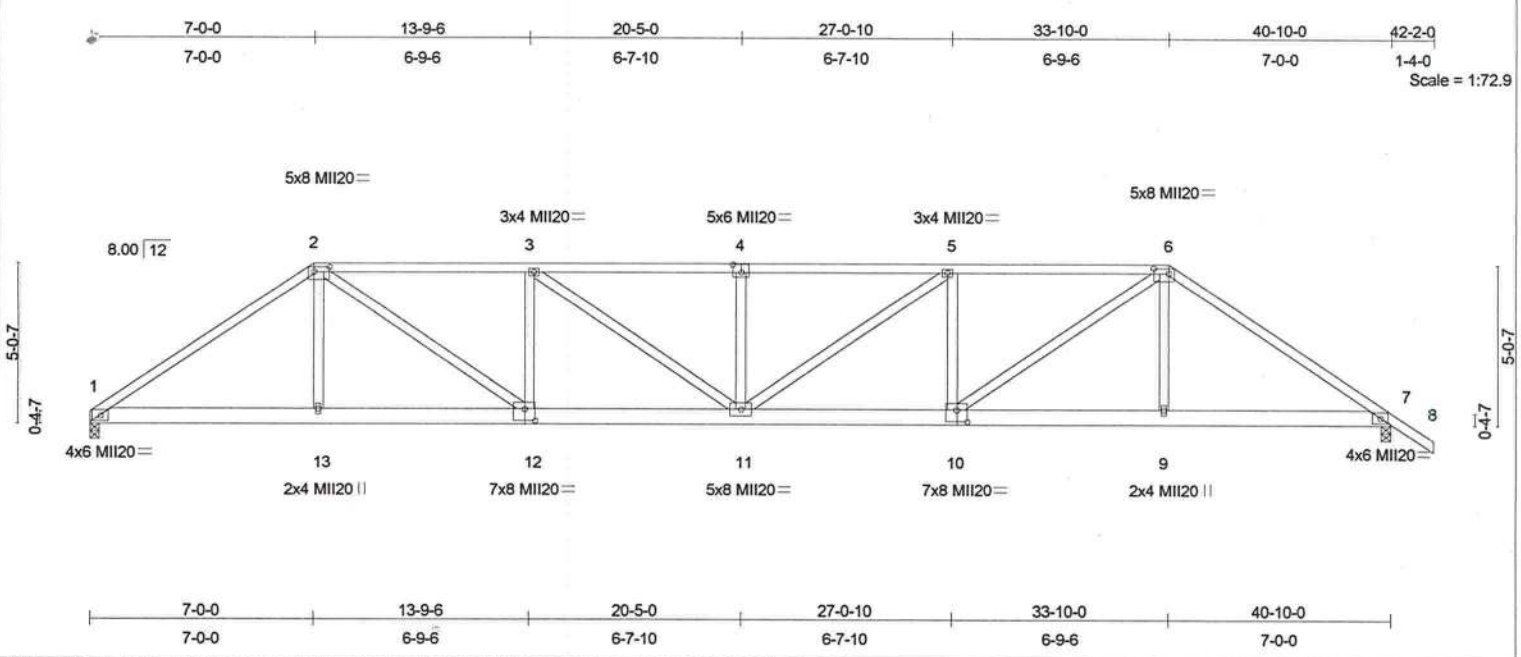

Plate Offsets (X,Y): [2:0-5-12,0-2-0], [4:0-3-0,0-3-4], [6:0-5-12,0-2-0], [10:0-4-0,0-4-8], [12:0-4-0,0-4-8]

LOADING (psf)		SPACING	2-0-0	CSI		DEFL	in	(loc)	l/defl	L/d	PLATES	GRIP
TCLL	20.0	Plates Increase	1.25	TC	0.99	Vert(LL)	0.49	11	>996	360	MII20	249/190
TCDL	10.0	Lumber Increase	1.25	BC	0.58	Vert(TL)	-0.49	11	>996	240		
BCLL	0.0	Rep Stress Incr	NO	WB	0.63	Horz(TL)	0.10	7	n/a	n/a		
BCDL	10.0	Code FBC2001/ANSI95		(Matrix)							Weight: 481 lb	

LUMBER
TOP CHORD 2 X 4 SYP No.2
BOT CHORD 2 X 6 SYP No.2
WEBS 2 X 4 SYP No.3

BRACING
TOP CHORD Sheathed or 4-3-8 oc purlins.
BOT CHORD Rigid ceiling directly applied or 7-2-15 oc bracing.

This truss design is based upon the building code shown. This code has been specified by the project engineer/architect, or building designer. The applicability of this code in any particular jurisdiction should be confirmed with the building official prior to truss fabrication. This determination is not the responsibility of the component/truss designer.

REACTIONS (lb/size) 1=3393/0-3-8, 7=3485/0-3-8
Max Horz 1=-221(load case 2)
Max Uplift1=-2363(load case 3), 7=-2391(load case 2)

FORCES (lb) - Maximum Compression/Maximum Tension
TOP CHORD 1-2=-5772/4170, 2-3=-7264/5494, 3-4=-8051/6036, 4-5=-8051/6036, 5-6=-7260/5491, 6-7=-5758/4164, 7-8=0/47
BOT CHORD 1-13=-3547/4699, 12-13=-3558/4723, 11-12=-5494/7263, 10-11=-5402/7259, 9-10=-3351/4710, 7-9=-3339/4686
WEBS 2-13=-403/762, 2-12=-2536/3163, 3-12=-1483/1563, 3-11=-772/993, 4-11=-843/989, 5-11=-774/996, 5-10=-1485/1565, 6-10=-2541/3168, 6-9=-383/750

NOTES
1) 2-ply truss to be connected together with 10d Common(.148"x3") Nails as follows:
Top chords connected as follows: 2 X 4 - 1 row at 0-9-0 oc.
Bottom chords connected as follows: 2 X 6 - 2 rows at 0-9-0 oc.
Webs connected as follows: 2 X 4 - 1 row at 0-9-0 oc.
2) All loads are considered equally applied to all plies, except if noted as front (F) or back (B) face in the LOAD CASE(S) section. Ply to ply connections have been provided to distribute only loads noted as (F) or (B), unless otherwise indicated.
3) Unbalanced roof live loads have been considered for this design.
4) Wind: ASCE 7-98; 110mph (3-second gust); h=15ft; TCDL=5.0psf; BCDL=5.0psf; Category II; Exp C; enclosed; MWFRS gable end zone; cantilever left and right exposed ; end vertical left and right exposed; Lumber DOL=1.33 plate grip DOL=1.33.
5) Provide adequate drainage to prevent water ponding.
6) Provide mechanical connection (by others) of truss to bearing plate capable of withstanding 2363 lb uplift at joint 1 and 2391 lb uplift at joint 7.
7) Girder carries hip end with 7-0-0 end setback.
8) Hanger(s) or other connection device(s) shall be provided sufficient to support concentrated load(s) 513 lb down and 481 lb up at 33-10-0, and 513 lb down and 481 lb up at 7-0-0 on bottom chord. The design/selection of such connection device(s) is the responsibility of others.

LOAD CASE(S) Standard
1) Regular: Lumber Increase=1.25, Plate Increase=1.25

Continued on page 2

Juan Garcia, FL Lic #58521
MiTek Industries, Inc.
14515 North Outer Forty Drive
Suite 300
Chesterfield, MO, 63017
FL Cert.#6634

November 14,2005

WARNING - Verify design parameters and READ NOTES ON THIS AND REVERSE SIDE BEFORE USE.
Design valid for use only with MiTek connectors. This design is based only upon parameters shown, and is for an individual building component. Applicability of design parameters and proper incorporation of component is responsibility of building designer - not truss designer. Bracing shown is for lateral support of individual web members only. Additional temporary bracing to insure stability during construction is the responsibility of the erector. Additional permanent bracing of the overall structure is the responsibility of the building designer. For general guidance regarding fabrication, quality control, storage, delivery, erection and bracing, consult ANSI/TPI1 Quality Criteria, DSB-89 and BCSI1 Building Component Safety Information available from Truss Plate Institute, 583 D'Onofrio Drive, Madison, WI 53719.

14515 N. Outer Forty,
Suite #300
Chesterfield, MO 63017

MiTek®

Symbols

PLATE LOCATION AND ORIENTATION

*Center plate on joint unless x,y offsets are indicated. Dimensions are in ft-in-sixteenths. Apply plates to both sides of truss and securely seat.

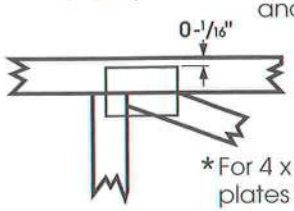

*For 4 x 2 orientation, locate plates 0 - 1/16" from outside edge of truss.

*This symbol indicates the required direction of slots in connector plates.

*** Plate location details available in MiTek 20/20 software or upon request.**

PLATE SIZE

4 x 4 — The first dimension is the width perpendicular to slots. Second dimension is the length parallel to slots.

LATERAL BRACING

Indicated by symbol shown and/or by text in the bracing section of the output. Use T, I or Eliminator bracing if indicated.

BEARING

Indicates location where bearings (supports) occur. Icons vary but reaction section indicates joint number where bearings occur.

Industry Standards:

ANSI/TPI1: National Design Specification for Metal Plate Connected Wood Truss Construction.
DSB-89: Design Standard for Bracing.
BCSI1: Building Component Safety Information, Guide to Good Practice for Handling, Installing & Bracing of Metal Plate Connected Wood Trusses.

Numbering System

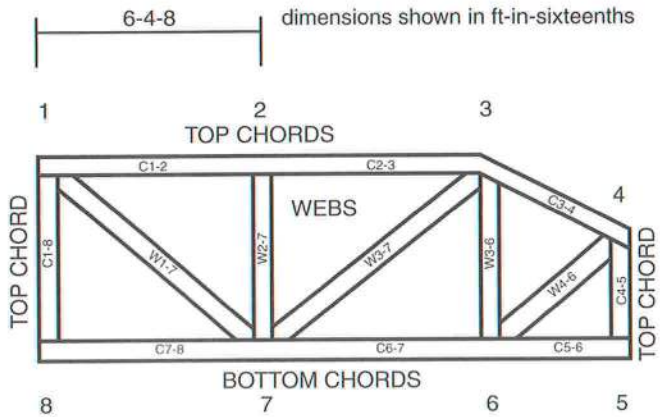

JOINTS ARE GENERALLY NUMBERED/LETTERED CLOCKWISE AROUND THE TRUSS STARTING AT THE JOINT FARTHEST TO THE LEFT.

CHORDS AND WEBS ARE IDENTIFIED BY END JOINT NUMBERS/LETTERS.

CONNECTOR PLATE CODE APPROVALS

BOCA	96-31, 95-43, 96-20-1, 96-67, 84-32
ICBO	4922, 5243, 5363, 3907
SBCCI	9667, 9730, 9604B, 9511, 9432A

MiTek®

TEE-LOK®

⚠General Safety Notes

Failure to Follow Could Cause Property Damage or Personal Injury

1. Additional stability bracing for truss system, e.g. diagonal or X-bracing, is always required. See BCSI1.
2. Never exceed the design loading shown and never stack materials on inadequately braced trusses.
3. Provide copies of this truss design to the building designer, erection supervisor, property owner and all other interested parties.
4. Cut members to bear tightly against each other.
5. Place plates on each face of truss at each joint and embed fully. Knots and wane at joint locations are regulated by ANSI/TPI1.
6. Design assumes trusses will be suitably protected from the environment in accord with ANSI/TPI1.
7. Unless otherwise noted, moisture content of lumber shall not exceed 19% at time of fabrication.
8. Unless expressly noted, this design is not applicable for use with fire retardant or preservative treated lumber.
9. Camber is a non-structural consideration and is the responsibility of truss fabricator. General practice is to camber for dead load deflection.
10. Plate type, size, orientation and location dimensions shown indicate minimum plating requirements.
11. Lumber used shall be of the species and size, and in all respects, equal to or better than that specified.
12. Top chords must be sheathed or purlins provided at spacing shown on design.
13. Bottom chords require lateral bracing at 10 ft. spacing, or less, if no ceiling is installed, unless otherwise noted.
14. Connections not shown are the responsibility of others.
15. Do not cut or alter truss member or plate without prior approval of a professional engineer.
16. Install and load vertically unless indicated otherwise.

© 2004 Mitek®

LOAD CASE(S) Standard

Uniform Loads (plf)

Vert: 1-2=-60, 2-6=-131(F=-71), 6-8=-60, 1-13=-20, 9-13=-44(F=-24), 7-9=-20

Concentrated Loads (lb)

Vert: 13=-513(F) 9=-513(F)

WARNING - Verify design parameters and READ NOTES ON THIS AND REVERSE SIDE BEFORE USE.

Design valid for use only with MiTek connectors. This design is based only upon parameters shown, and is for an individual building component. Applicability of design parameters and proper incorporation of component is responsibility of building designer - not truss designer. Bracing shown is for lateral support of individual web members only. Additional temporary bracing to insure stability during construction is the responsibility of the erector. Additional permanent bracing of the overall structure is the responsibility of the building designer. For general guidance regarding fabrication, quality control, storage, delivery, erection and bracing, consult **ANSI/TPI1 Quality Criteria, DSB-89 and BCSI1 Building Component Safety Information** available from Truss Plate Institute, 583 D'Onofrio Drive, Madison, WI 53719.

14515 N. Outer Forty,
Suite #300
Chesterfield, MO 63017

MiTek®

Symbols

PLATE LOCATION AND ORIENTATION

*Center plate on joint unless x,y offsets are indicated. Dimensions are in ft-in-sixteenths. Apply plates to both sides of truss and securely seat.

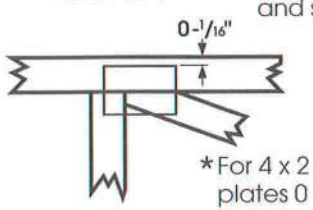

*For 4 x 2 orientation, locate plates 0 - 1/16" from outside edge of truss.

*This symbol indicates the required direction of slots in connector plates.

*** Plate location details available in MiTek 20/20 software or upon request.**

PLATE SIZE

4 x 4 — The first dimension is the width perpendicular to slots. Second dimension is the length parallel to slots.

LATERAL BRACING

Indicated by symbol shown and/or by text in the bracing section of the output. Use T, I or Eliminator bracing if indicated.

BEARING

Indicates location where bearings (supports) occur. Icons vary but reaction section indicates joint number where bearings occur.

Industry Standards:

ANSI/TPI1: National Design Specification for Metal Plate Connected Wood Truss Construction.
DSB-89: Design Standard for Bracing.
BCSI1: Building Component Safety Information, Guide to Good Practice for Handling, Installing & Bracing of Metal Plate Connected Wood Trusses.

Numbering System

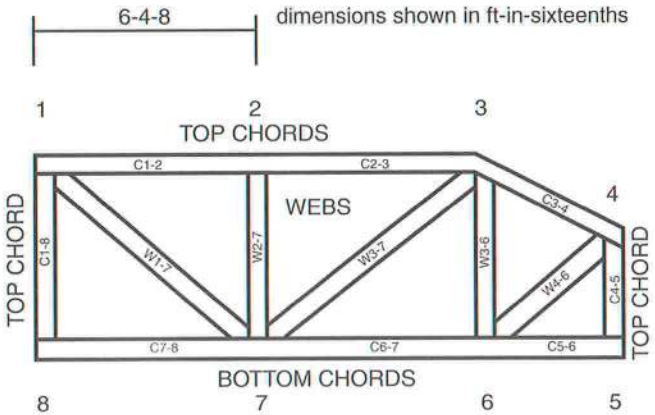

JOINTS ARE GENERALLY NUMBERED/LETTERED CLOCKWISE AROUND THE TRUSS STARTING AT THE JOINT FARTHEST TO THE LEFT.

CHORDS AND WEBS ARE IDENTIFIED BY END JOINT NUMBERS/LETTERS.

CONNECTOR PLATE CODE APPROVALS

BOCA	96-31, 95-43, 96-20-1, 96-67, 84-32
ICBO	4922, 5243, 5363, 3907
SBCCI	9667, 9730, 9604B, 9511, 9432A

MiTek®

TEE-LOK®

⚠General Safety Notes

Failure to Follow Could Cause Property Damage or Personal Injury

1. Additional stability bracing for truss system, e.g. diagonal or X-bracing, is always required. See BCSI1.
2. Never exceed the design loading shown and never stack materials on inadequately braced trusses.
3. Provide copies of this truss design to the building designer, erection supervisor, property owner and all other interested parties.
4. Cut members to bear tightly against each other.
5. Place plates on each face of truss at each joint and embed fully. Knots and wane at joint locations are regulated by ANSI/TPI1.
6. Design assumes trusses will be suitably protected from the environment in accord with ANSI/TPI1.
7. Unless otherwise noted, moisture content of lumber shall not exceed 19% at time of fabrication.
8. Unless expressly noted, this design is not applicable for use with fire retardant or preservative treated lumber.
9. Camber is a non-structural consideration and is the responsibility of truss fabricator. General practice is to camber for dead load deflection.
10. Plate type, size, orientation and location dimensions shown indicate minimum plating requirements.
11. Lumber used shall be of the species and size, and in all respects, equal to or better than that specified.
12. Top chords must be sheathed or purlins provided at spacing shown on design.
13. Bottom chords require lateral bracing at 10 ft. spacing, or less, if no ceiling is installed, unless otherwise noted.
14. Connections not shown are the responsibility of others.
15. Do not cut or alter truss member or plate without prior approval of a professional engineer.
16. Install and load vertically unless indicated otherwise.

© 2004 Mitek®

Job	Truss	Truss Type	Qty	Ply	SIMQUE HOMES
8833	H10	ROOF TRUSS	1	1	I9388123 Job Reference (optional)

Reese Building Components, INC., Sylvester Ga. 6.200 s Oct 18 2005 MiTek Industries, Inc. Fri Nov 11 13:30:40 2005 Page 1

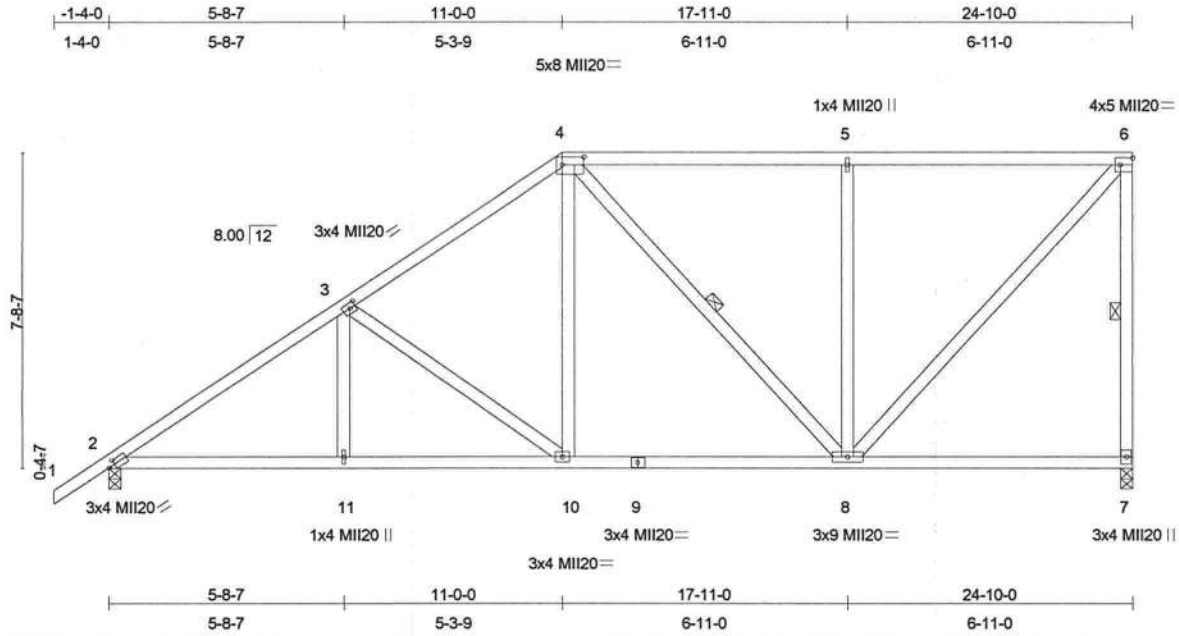

Plate Offsets (X,Y): [2:0-1-15,0-1-8], [3:0-1-12,0-1-8], [4:0-6-4,0-2-4], [6:Edge,0-2-0]

LOADING (psf)		SPACING 2-0-0		CSI		DEFL	in	(loc)	l/defl	L/d	PLATES	GRIP
TCLL	20.0	Plates Increase	1.25	TC	0.54	Vert(LL)	0.05	8-10	>999	360	MII20	249/190
TCDL	10.0	Lumber Increase	1.25	BC	0.34	Vert(TL)	-0.09	8-10	>999	240		
BCLL	0.0	Rep Stress Incr	YES	WB	0.79	Horz(TL)	0.03	7	n/a	n/a		
BCDL	10.0	Code FBC2001/ANSI95		(Matrix)							Weight: 155 lb	

LUMBER
TOP CHORD 2 X 4 SYP No.2
BOT CHORD 2 X 4 SYP No.2
WEBS 2 X 4 SYP No.3

BRACING
TOP CHORD Sheathed or 5-0-4 oc purlins, except end verticals.
BOT CHORD Rigid ceiling directly applied or 8-4-3 oc bracing.
WEBS 1 Row at midpt 6-7, 4-8

REACTIONS (lb/size) 7=979/0-3-8, 2=1073/0-3-8
Max Horz 2=424(load case 3)
Max Uplift7=-443(load case 3), 2=-424(load case 4)

This truss design is based upon the building code shown. This code has been specified by the project engineer/architect, or building designer. The applicability of this code in any particular jurisdiction should be confirmed with the building official prior to truss fabrication. This determination is not the responsibility of the component/truss designer.

FORCES (lb) - Maximum Compression/Maximum Tension
TOP CHORD 1-2=0/44, 2-3=-1469/426, 3-4=-1078/371, 4-5=-694/334, 5-6=-693/334, 6-7=-912/453
BOT CHORD 2-11=-559/1133, 10-11=-559/1133, 9-10=-462/832, 8-9=-462/832, 7-8=-96/115
WEBS 3-11=0/124, 3-10=-376/313, 4-10=-114/338, 4-8=-203/156, 5-8=-444/410, 6-8=-450/991

NOTES
1) Wind: ASCE 7-98; 110mph (3-second gust); h=15ft; TCDL=5.0psf; BCDL=5.0psf; Category II; Exp C; enclosed; MWFRS gable end zone; cantilever left and right exposed ; end vertical left and right exposed; Lumber DOL=1.33 plate grip DOL=1.33.
2) Provide adequate drainage to prevent water ponding.
3) Provide mechanical connection (by others) of truss to bearing plate capable of withstanding 443 lb uplift at joint 7 and 424 lb uplift at joint 2.

LOAD CASE(S) Standard

Juan Garcia, FL Lic #58521
MiTek Industries, Inc.
14515 North Outer Forty Drive
Suite 300
Chesterfield, MO, 63017
FL Cert.#6634

November 14,2005

WARNING - Verify design parameters and READ NOTES ON THIS AND REVERSE SIDE BEFORE USE.
Design valid for use only with MiTek connectors. This design is based only upon parameters shown, and is for an individual building component. Applicability of design parameters and proper incorporation of component is responsibility of building designer - not truss designer. Bracing shown is for lateral support of individual web members only. Additional temporary bracing to insure stability during construction is the responsibility of the erector. Additional permanent bracing of the overall structure is the responsibility of the building designer. For general guidance regarding fabrication, quality control, storage, delivery, erection and bracing, consult **ANSI/TPI1 Quality Criteria, DSB-89 and BCSI1 Building Component Safety Information** available from Truss Plate Institute, 583 D'Onofrio Drive, Madison, WI 53719.

14515 N. Outer Forty,
Suite #300
Chesterfield, MO 63017

MiTek®

Symbols

PLATE LOCATION AND ORIENTATION

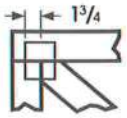

*Center plate on joint unless x,y offsets are indicated. Dimensions are in ft-in-sixteenths. Apply plates to both sides of truss and securely seat.

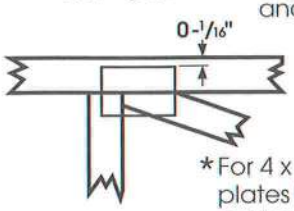

*For 4 x 2 orientation, locate plates 0 - 1/16" from outside edge of truss.

*This symbol indicates the required direction of slots in connector plates.

*** Plate location details available in MiTek 20/20 software or upon request.**

PLATE SIZE

4 x 4 — The first dimension is the width perpendicular to slots. Second dimension is the length parallel to slots.

LATERAL BRACING

Indicated by symbol shown and/or by text in the bracing section of the output. Use T, I or Eliminator bracing if indicated.

BEARING

Indicates location where bearings (supports) occur. Icons vary but reaction section indicates joint number where bearings occur.

Industry Standards:

ANSI/TPI1: National Design Specification for Metal Plate Connected Wood Truss Construction.
DSB-89: Design Standard for Bracing.
BCSI1: Building Component Safety Information, Guide to Good Practice for Handling, Installing & Bracing of Metal Plate Connected Wood Trusses.

Numbering System

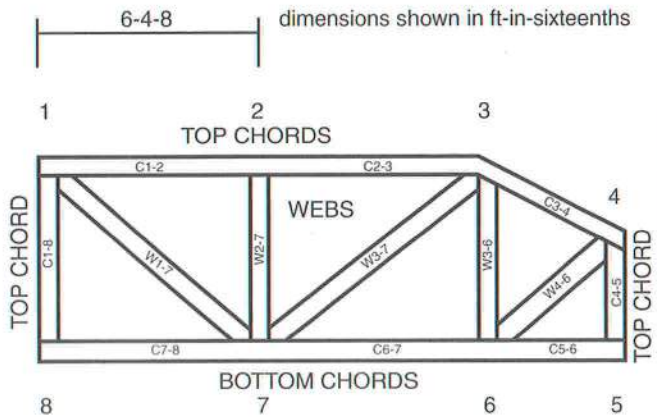

JOINTS ARE GENERALLY NUMBERED/LETTERED CLOCKWISE AROUND THE TRUSS STARTING AT THE JOINT FARTHEST TO THE LEFT.

CHORDS AND WEBS ARE IDENTIFIED BY END JOINT NUMBERS/LETTERS.

CONNECTOR PLATE CODE APPROVALS

BOCA	96-31, 95-43, 96-20-1, 96-67, 84-32
ICBO	4922, 5243, 5363, 3907
SBCCI	9667, 9730, 9604B, 9511, 9432A

MiTek®

TEE-LOK®

⚠General Safety Notes

Failure to Follow Could Cause Property Damage or Personal Injury

1. Additional stability bracing for truss system, e.g. diagonal or X-bracing, is always required. See BCSI1.
2. Never exceed the design loading shown and never stack materials on inadequately braced trusses.
3. Provide copies of this truss design to the building designer, erection supervisor, property owner and all other interested parties.
4. Cut members to bear tightly against each other.
5. Place plates on each face of truss at each joint and embed fully. Knots and wane at joint locations are regulated by ANSI/TPI1.
6. Design assumes trusses will be suitably protected from the environment in accord with ANSI/TPI1.
7. Unless otherwise noted, moisture content of lumber shall not exceed 19% at time of fabrication.
8. Unless expressly noted, this design is not applicable for use with fire retardant or preservative treated lumber.
9. Camber is a non-structural consideration and is the responsibility of truss fabricator. General practice is to camber for dead load deflection.
10. Plate type, size, orientation and location dimensions shown indicate minimum plating requirements.
11. Lumber used shall be of the species and size, and in all respects, equal to or better than that specified.
12. Top chords must be sheathed or purlins provided at spacing shown on design.
13. Bottom chords require lateral bracing at 10 ft. spacing, or less, if no ceiling is installed, unless otherwise noted.
14. Connections not shown are the responsibility of others.
15. Do not cut or alter truss member or plate without prior approval of a professional engineer.
16. Install and load vertically unless indicated otherwise.

© 2004 Mitek®

Job	Truss	Truss Type	Qty	Ply	SIMQUE HOMES
8833	H11	ROOF TRUSS	1	1	I9388124
					Job Reference (optional)

Reese Building Components, INC., Sylvester Ga. 6.200 s Oct 18 2005 MiTek Industries, Inc. Fri Nov 11 13:30:40 2005 Page 1

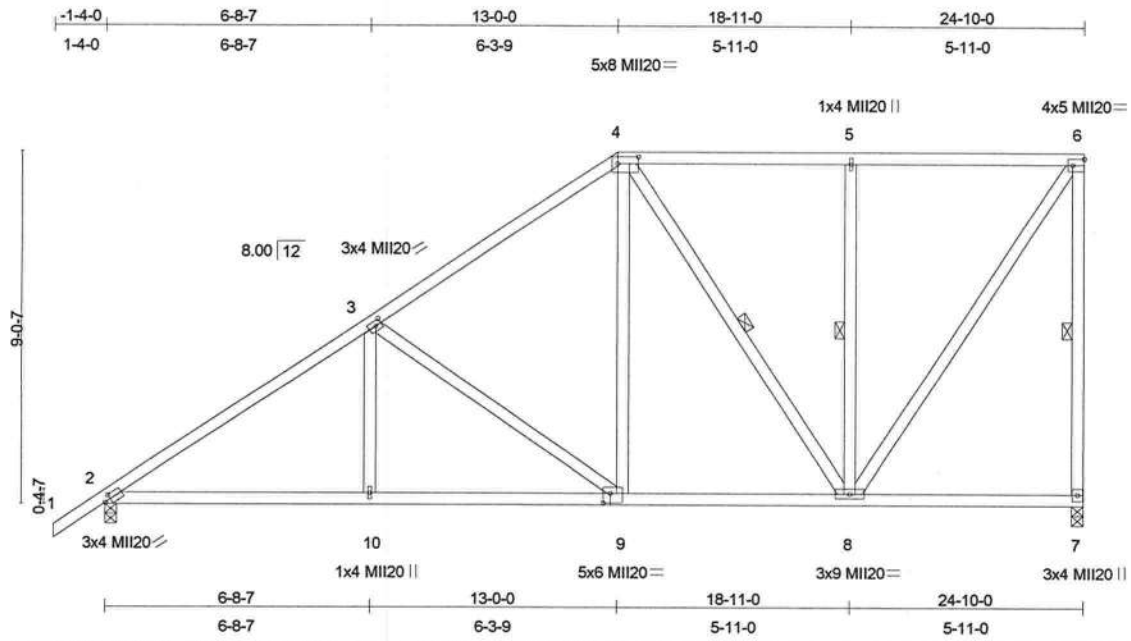

Plate Offsets (X,Y): [2:0-1-15,0-1-8], [3:0-1-12,0-1-8], [4:0-6-4,0-2-4], [6:Edge,0-2-0], [9:0-2-4,0-3-0]

LOADING (psf)		SPACING	2-0-0	CSI		DEFL	in	(loc)	l/defl	L/d	PLATES	GRIP
TCLL	20.0	Plates Increase	1.25	TC	0.56	Vert(LL)	0.06	2-10	>999	360	MII20	249/190
TCDL	10.0	Lumber Increase	1.25	BC	0.38	Vert(TL)	-0.11	2-10	>999	240		
BCLL	0.0	Rep Stress Incr	YES	WB	0.80	Horz(TL)	0.03	7	n/a	n/a		
BCDL	10.0	Code FBC2001/ANSI95		(Matrix)							Weight: 166 lb	

LUMBER
TOP CHORD 2 X 4 SYP No.2
BOT CHORD 2 X 4 SYP No.2
WEBS 2 X 4 SYP No.3

BRACING
TOP CHORD Sheathed or 4-11-6 oc purlins, except end verticals.
BOT CHORD Rigid ceiling directly applied or 8-4-1 oc bracing.
WEBS 1 Row at midpt 6-7, 4-8, 5-8

REACTIONS (lb/size) 7=979/0-3-8, 2=1073/0-3-8
Max Horz 2=497(load case 3)
Max Uplift7=-443(load case 3), 2=-437(load case 4)

This truss design is based upon the building code shown. This code has been specified by the project engineer/architect, or building designer. The applicability of this code in any particular jurisdiction should be confirmed with the building official prior to truss fabrication. This determination is not the responsibility of the component/truss designer.

FORCES (lb) - Maximum Compression/Maximum Tension
TOP CHORD 1-2=0/44, 2-3=-1443/438, 3-4=-958/365, 4-5=-521/281, 5-6=-521/281, 6-7=-921/440
BOT CHORD 2-10=-551/1104, 9-10=-551/1104, 8-9=-422/712, 7-8=-106/145
WEBS 3-10=0/158, 3-9=-487/384, 4-9=-148/396, 4-8=-341/214, 5-8=-370/336, 6-8=-418/919

NOTES
1) Wind: ASCE 7-98; 110mph (3-second gust); h=15ft; TCDL=5.0psf; BCDL=5.0psf; Category II; Exp C; enclosed; MWFRS gable end zone; cantilever left and right exposed ; end vertical left and right exposed; Lumber DOL=1.33 plate grip DOL=1.33.
2) Provide adequate drainage to prevent water ponding.
3) Provide mechanical connection (by others) of truss to bearing plate capable of withstanding 443 lb uplift at joint 7 and 437 lb uplift at joint 2.

LOAD CASE(S) Standard

Juan Garcia, FL Lic #58521
MiTek Industries, Inc.
14515 North Outer Forty Drive
Suite 300
Chesterfield, MO, 63017
FL Cert.#6634

November 14,2005

WARNING - Verify design parameters and READ NOTES ON THIS AND REVERSE SIDE BEFORE USE.
Design valid for use only with MiTek connectors. This design is based only upon parameters shown, and is for an individual building component. Applicability of design parameters and proper incorporation of component is responsibility of building designer - not truss designer. Bracing shown is for lateral support of individual web members only. Additional temporary bracing to insure stability during construction is the responsibility of the erector. Additional permanent bracing of the overall structure is the responsibility of the building designer. For general guidance regarding fabrication, quality control, storage, delivery, erection and bracing, consult ANSI/TPI1 Quality Criteria, DSB-89 and BCSI1 Building Component Safety Information available from Truss Plate Institute, 583 D'Onofrio Drive, Madison, WI 53719.

14515 N. Outer Forty,
Suite #300
Chesterfield, MO 63017

MiTek®

Symbols

PLATE LOCATION AND ORIENTATION

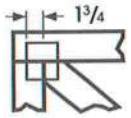

*Center plate on joint unless x,y offsets are indicated. Dimensions are in ft-in-sixteenths. Apply plates to both sides of truss and securely seat.

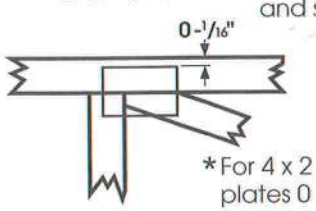

*For 4 x 2 orientation, locate plates 0 - 1/16" from outside edge of truss.

*This symbol indicates the required direction of slots in connector plates.

*** Plate location details available in MiTek 20/20 software or upon request.**

PLATE SIZE

4 x 4 — The first dimension is the width perpendicular to slots. Second dimension is the length parallel to slots.

LATERAL BRACING

Indicated by symbol shown and/or by text in the bracing section of the output. Use T, I or Eliminator bracing if indicated.

BEARING

Indicates location where bearings (supports) occur. Icons vary but reaction section indicates joint number where bearings occur.

Industry Standards:

ANSI/TPI1: National Design Specification for Metal Plate Connected Wood Truss Construction.
DSB-89: Design Standard for Bracing.
BCSI1: Building Component Safety Information, Guide to Good Practice for Handling, Installing & Bracing of Metal Plate Connected Wood Trusses.

Numbering System

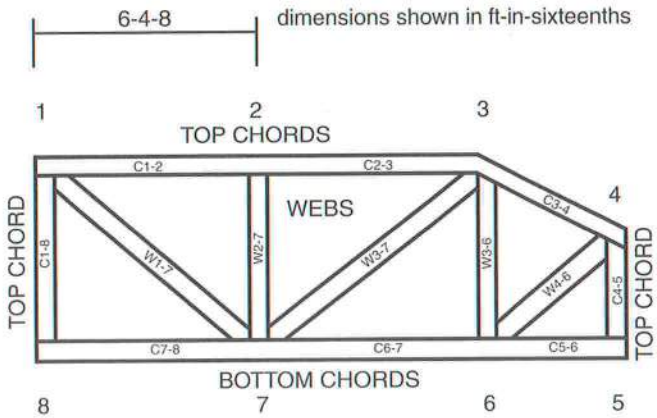

JOINTS ARE GENERALLY NUMBERED/LETTERED CLOCKWISE AROUND THE TRUSS STARTING AT THE JOINT FARTHEST TO THE LEFT.

CHORDS AND WEBS ARE IDENTIFIED BY END JOINT NUMBERS/LETTERS.

CONNECTOR PLATE CODE APPROVALS

BOCA	96-31, 95-43, 96-20-1, 96-67, 84-32
ICBO	4922, 5243, 5363, 3907
SBCCI	9667, 9730, 9604B, 9511, 9432A

MiTek®

TEE-LOK®

⚠General Safety Notes

Failure to Follow Could Cause Property Damage or Personal Injury

1. Additional stability bracing for truss system, e.g. diagonal or X-bracing, is always required. See BCSI1.
2. Never exceed the design loading shown and never stack materials on inadequately braced trusses.
3. Provide copies of this truss design to the building designer, erection supervisor, property owner and all other interested parties.
4. Cut members to bear tightly against each other.
5. Place plates on each face of truss at each joint and embed fully. Knots and wane at joint locations are regulated by ANSI/TPI1.
6. Design assumes trusses will be suitably protected from the environment in accord with ANSI/TPI1.
7. Unless otherwise noted, moisture content of lumber shall not exceed 19% at time of fabrication.
8. Unless expressly noted, this design is not applicable for use with fire retardant or preservative treated lumber.
9. Camber is a non-structural consideration and is the responsibility of truss fabricator. General practice is to camber for dead load deflection.
10. Plate type, size, orientation and location dimensions shown indicate minimum plating requirements.
11. Lumber used shall be of the species and size, and in all respects, equal to or better than that specified.
12. Top chords must be sheathed or purlins provided at spacing shown on design.
13. Bottom chords require lateral bracing at 10 ft. spacing, or less, if no ceiling is installed, unless otherwise noted.
14. Connections not shown are the responsibility of others.
15. Do not cut or alter truss member or plate without prior approval of a professional engineer.
16. Install and load vertically unless indicated otherwise.

© 2004 Mitek®

Job	Truss	Truss Type	Qty	Ply	SIMQUE HOMES
8833	H12	ROOF TRUSS	1	1	I9388125
					Job Reference (optional)

Reese Building Components, INC., Sylvester Ga.

6.200 s Oct 18 2005 MiTek Industries, Inc. Fri Nov 11 13:30:41 2005 Page 1

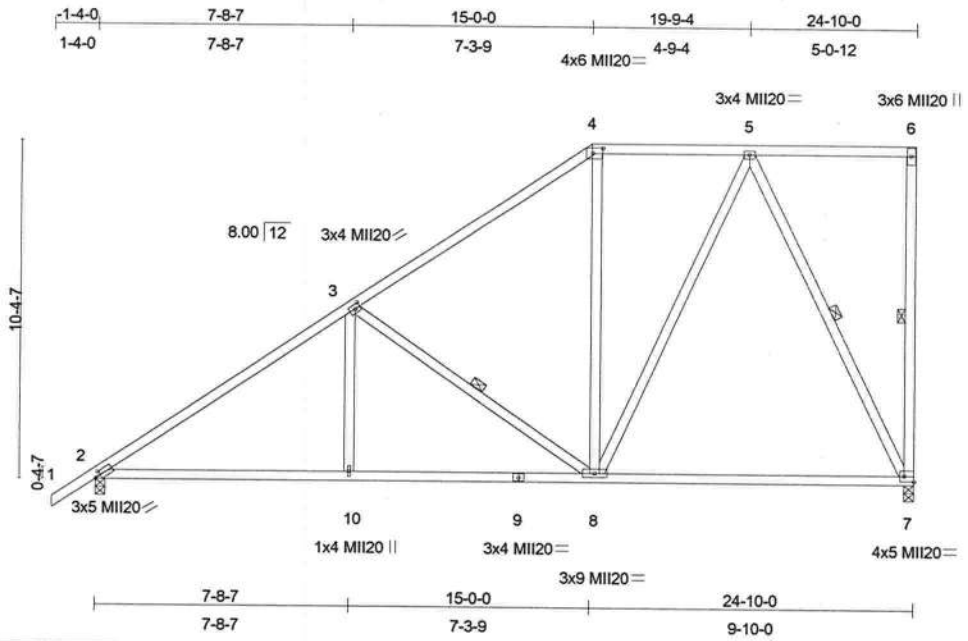

Plate Offsets (X,Y): [2:0-1-15,0-1-8], [3:0-1-12,0-1-8], [4:0-3-12,0-2-0], [7:Edge,0-2-0]

LOADING (psf)		SPACING	2-0-0	CSI		DEFL	in	(loc)	l/defl	L/d	PLATES	GRIP
TCLL	20.0	Plates Increase	1.25	TC	0.63	Vert(LL)	0.15	7-8	>999	360	MII20	249/190
TCDL	10.0	Lumber Increase	1.25	BC	0.44	Vert(TL)	-0.20	7-8	>999	240		
BCLL	0.0	Rep Stress Incr	YES	WB	0.75	Horz(TL)	0.03	7	n/a	n/a		
BCDL	10.0	Code FBC2001/ANSI95		(Matrix)							Weight: 163 lb	

LUMBER
TOP CHORD 2 X 4 SYP No.2
BOT CHORD 2 X 4 SYP No.2
WEBS 2 X 4 SYP No.3

BRACING
TOP CHORD Sheathed or 4-9-15 oc purlins, except end verticals.
BOT CHORD Rigid ceiling directly applied or 8-2-11 oc bracing.
WEBS 1 Row at midpt 6-7, 3-8, 5-7

REACTIONS (lb/size) 7=979/0-3-8, 2=1073/0-3-8
Max Horz 2=570(load case 3)
Max Uplift7=-444(load case 3), 2=-445(load case 4)

This truss design is based upon the building code shown. This code has been specified by the project engineer/architect, or building designer. The applicability of this code in any particular jurisdiction should be confirmed with the building official prior to truss fabrication. This determination is not the responsibility of the component/truss designer.

FORCES (lb) - Maximum Compression/Maximum Tension
TOP CHORD 1-2=0/44, 2-3=-1407/437, 3-4=-849/349, 4-5=-597/399, 5-6=-120/180, 6-7=-141/173
BOT CHORD 2-10=-545/1066, 9-10=-545/1066, 8-9=-545/1066, 7-8=-312/381
WEBS 3-10=0/172, 3-8=-573/449, 4-8=-10/130, 5-8=-289/516, 5-7=-831/462

NOTES
1) Wind: ASCE 7-98; 110mph (3-second gust); h=15ft; TCDL=5.0psf; BCDL=5.0psf; Category II; Exp C; enclosed; MWFRS gable end zone; cantilever left and right exposed ; end vertical left and right exposed; Lumber DOL=1.33 plate grip DOL=1.33.
2) Provide adequate drainage to prevent water ponding.
3) Provide mechanical connection (by others) of truss to bearing plate capable of withstanding 444 lb uplift at joint 7 and 445 lb uplift at joint 2.

LOAD CASE(S) Standard

Juan Garcia, FL Lic #58521
MiTek Industries, Inc.
14515 North Outer Forty Drive
Suite 300
Chesterfield, MO, 63017
FL Cert.#6634

November 14,2005

WARNING - Verify design parameters and READ NOTES ON THIS AND REVERSE SIDE BEFORE USE.
Design valid for use only with MiTek connectors. This design is based only upon parameters shown, and is for an individual building component. Applicability of design parameters and proper incorporation of component is responsibility of building designer - not truss designer. Bracing shown is for lateral support of individual web members only. Additional temporary bracing to insure stability during construction is the responsibility of the erector. Additional permanent bracing of the overall structure is the responsibility of the building designer. For general guidance regarding fabrication, quality control, storage, delivery, erection and bracing, consult ANSI/TPI1 Quality Criteria, DSB-89 and BCSI1 Building Component Safety Information available from Truss Plate Institute, 583 D'Onofrio Drive, Madison, WI 53719.

14515 N. Outer Forty,
Suite #300
Chesterfield, MO 63017

MiTek®

Symbols

PLATE LOCATION AND ORIENTATION

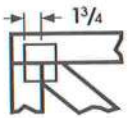

*Center plate on joint unless x,y offsets are indicated. Dimensions are in ft-in-sixteenths. Apply plates to both sides of truss and securely seat.

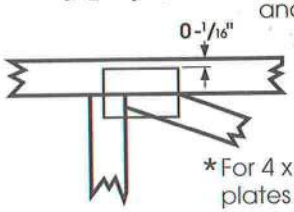

*For 4 x 2 orientation, locate plates 0 - 1/16" from outside edge of truss.

*This symbol indicates the required direction of slots in connector plates.

*** Plate location details available in MiTek 20/20 software or upon request.**

PLATE SIZE

4 x 4 — The first dimension is the width perpendicular to slots. Second dimension is the length parallel to slots.

LATERAL BRACING

Indicated by symbol shown and/or by text in the bracing section of the output. Use T, I or Eliminator bracing if indicated.

BEARING

Indicates location where bearings (supports) occur. Icons vary but reaction section indicates joint number where bearings occur.

Industry Standards:

ANSI/TPI1: National Design Specification for Metal Plate Connected Wood Truss Construction.
DSB-89: Design Standard for Bracing.
BCSI1: Building Component Safety Information, Guide to Good Practice for Handling, Installing & Bracing of Metal Plate Connected Wood Trusses.

Numbering System

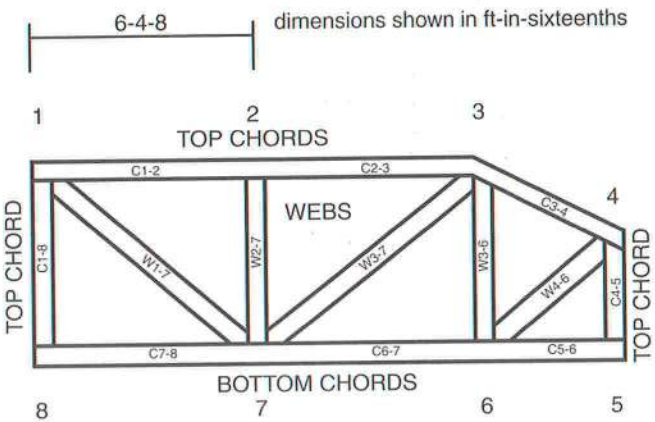

JOINTS ARE GENERALLY NUMBERED/LETTERED CLOCKWISE AROUND THE TRUSS STARTING AT THE JOINT FARTHEST TO THE LEFT.

CHORDS AND WEBS ARE IDENTIFIED BY END JOINT NUMBERS/LETTERS.

CONNECTOR PLATE CODE APPROVALS

BOCA	96-31, 95-43, 96-20-1, 96-67, 84-32
ICBO	4922, 5243, 5363, 3907
SBCCI	9667, 9730, 9604B, 9511, 9432A

MiTek®

TEE-LOK®

⚠General Safety Notes

Failure to Follow Could Cause Property Damage or Personal Injury

1. Additional stability bracing for truss system, e.g. diagonal or X-bracing, is always required. See BCSI1.
2. Never exceed the design loading shown and never stack materials on inadequately braced trusses.
3. Provide copies of this truss design to the building designer, erection supervisor, property owner and all other interested parties.
4. Cut members to bear tightly against each other.
5. Place plates on each face of truss at each joint and embed fully. Knots and wane at joint locations are regulated by ANSI/TPI1.
6. Design assumes trusses will be suitably protected from the environment in accord with ANSI/TPI1.
7. Unless otherwise noted, moisture content of lumber shall not exceed 19% at time of fabrication.
8. Unless expressly noted, this design is not applicable for use with fire retardant or preservative treated lumber.
9. Camber is a non-structural consideration and is the responsibility of truss fabricator. General practice is to camber for dead load deflection.
10. Plate type, size, orientation and location dimensions shown indicate minimum plating requirements.
11. Lumber used shall be of the species and size, and in all respects, equal to or better than that specified.
12. Top chords must be sheathed or purlins provided at spacing shown on design.
13. Bottom chords require lateral bracing at 10 ft. spacing, or less, if no ceiling is installed, unless otherwise noted.
14. Connections not shown are the responsibility of others.
15. Do not cut or alter truss member or plate without prior approval of a professional engineer.
16. Install and load vertically unless indicated otherwise.

© 2004 Mitek®

Job	Truss	Truss Type	Qty	Ply	SIMQUE HOMES
8833	H13	ROOF TRUSS	1	1	I9388126
					Job Reference (optional)

Reese Building Components, INC., Sylvester Ga.

6.200 s Oct 18 2005 MiTek Industries, Inc. Fri Nov 11 13:30:41 2005 Page 1

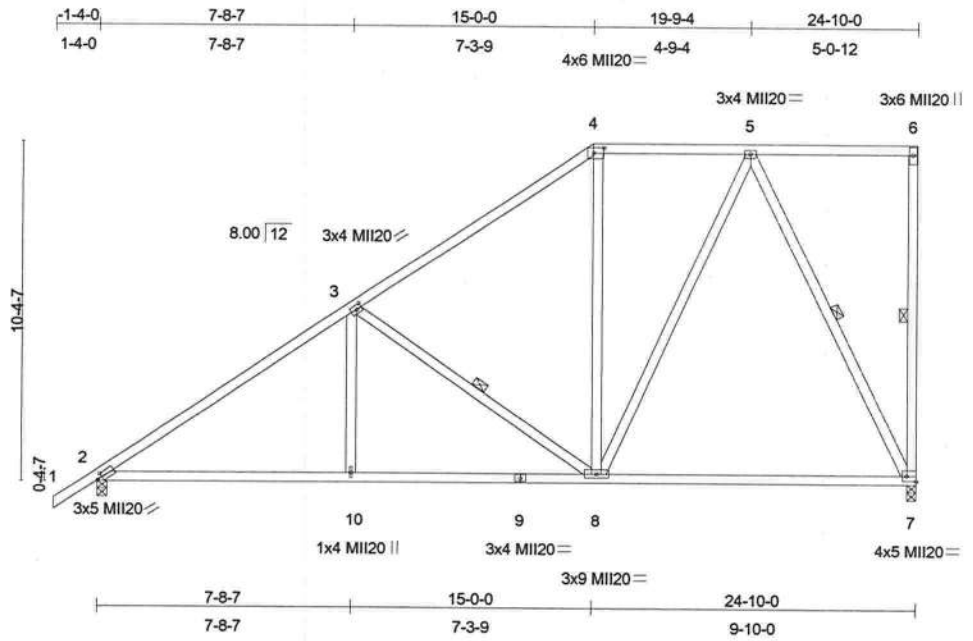

Plate Offsets (X,Y): [2:0-1-15,0-1-8], [3:0-1-12,0-1-8], [4:0-3-12,0-2-0], [7:Edge,0-2-0]

LOADING (psf)		SPACING	2-0-0	CSI		DEFL	in	(loc)	l/defl	L/d	PLATES	GRIP
TCLL	20.0	Plates Increase	1.25	TC	0.63	Vert(LL)	0.15	7-8	>999	360	MII20	249/190
TCDL	10.0	Lumber Increase	1.25	BC	0.44	Vert(TL)	-0.20	7-8	>999	240		
BCLL	0.0	Rep Stress Incr	YES	WB	0.75	Horz(TL)	0.03	7	n/a	n/a		
BCDL	10.0	Code FBC2001/ANSI95		(Matrix)							Weight: 163 lb	

LUMBER
TOP CHORD 2 X 4 SYP No.2
BOT CHORD 2 X 4 SYP No.2
WEBS 2 X 4 SYP No.3

BRACING
TOP CHORD Sheathed or 4-9-15 oc purlins, except end verticals.
BOT CHORD Rigid ceiling directly applied or 8-2-11 oc bracing.
WEBS 1 Row at midpt 6-7, 3-8, 5-7

This truss design is based upon the building code shown. This code has been specified by the project engineer/architect, or building designer. The applicability of this code in any particular jurisdiction should be confirmed with the building official prior to truss fabrication. This determination is not the responsibility of the component/truss designer.

REACTIONS (lb/size) 7=979/0-3-8, 2=1073/0-3-8
Max Horz 2=570(load case 3)
Max Uplift7=-444(load case 3), 2=-445(load case 4)

FORCES (lb) - Maximum Compression/Maximum Tension
TOP CHORD 1-2=0/44, 2-3=-1407/437, 3-4=-849/349, 4-5=-597/399, 5-6=-120/180, 6-7=-141/173
BOT CHORD 2-10=-545/1066, 9-10=-545/1066, 8-9=-545/1066, 7-8=-312/381
WEBS 3-10=0/172, 3-8=-573/449, 4-8=-10/130, 5-8=-289/516, 5-7=-831/462

NOTES
1) Wind: ASCE 7-98; 110mph (3-second gust); h=15ft; TCDL=5.0psf; BCDL=5.0psf; Category II; Exp C; enclosed; MWFRS gable end zone; cantilever left and right exposed ; end vertical left and right exposed; Lumber DOL=1.33 plate grip DOL=1.33.
2) Provide adequate drainage to prevent water ponding.
3) Provide mechanical connection (by others) of truss to bearing plate capable of withstanding 444 lb uplift at joint 7 and 445 lb uplift at joint 2.

LOAD CASE(S) Standard

Juan Garcia, FL Lic #58521
MiTek Industries, Inc.
14515 North Outer Forty Drive
Suite 300
Chesterfield, MO, 63017
FL Cert.#6634

November 14,2005

WARNING - Verify design parameters and READ NOTES ON THIS AND REVERSE SIDE BEFORE USE.
Design valid for use only with MiTek connectors. This design is based only upon parameters shown, and is for an individual building component. Applicability of design parameters and proper incorporation of component is responsibility of building designer - not truss designer. Bracing shown is for lateral support of individual web members only. Additional temporary bracing to insure stability during construction is the responsibility of the erector. Additional permanent bracing of the overall structure is the responsibility of the building designer. For general guidance regarding fabrication, quality control, storage, delivery, erection and bracing, consult ANSI/TPI1 Quality Criteria, DSB-89 and BCSI1 Building Component Safety Information available from Truss Plate Institute, 583 D'Onofrio Drive, Madison, WI 53719.

14515 N. Outer Forty,
Suite #300
Chesterfield, MO 63017

MiTek®

Symbols

PLATE LOCATION AND ORIENTATION

*Center plate on joint unless x,y offsets are indicated. Dimensions are in ft-in-sixteenths. Apply plates to both sides of truss and securely seat.

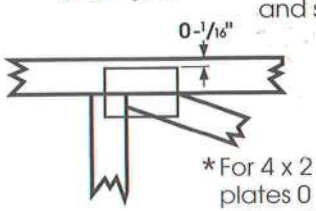

*For 4 x 2 orientation, locate plates 0 - 1/16" from outside edge of truss.

*This symbol indicates the required direction of slots in connector plates.

*** Plate location details available in MiTek 20/20 software or upon request.**

PLATE SIZE

4 x 4 — The first dimension is the width perpendicular to slots. Second dimension is the length parallel to slots.

LATERAL BRACING

Indicated by symbol shown and/or by text in the bracing section of the output. Use T, I or Eliminator bracing if indicated.

BEARING

Indicates location where bearings (supports) occur. Icons vary but reaction section indicates joint number where bearings occur.

Industry Standards:

ANSI/TPI1: National Design Specification for Metal Plate Connected Wood Truss Construction.
DSB-89: Design Standard for Bracing.
BCSI1: Building Component Safety Information, Guide to Good Practice for Handling, Installing & Bracing of Metal Plate Connected Wood Trusses.

Numbering System

6-4-8 — dimensions shown in ft-in-sixteenths

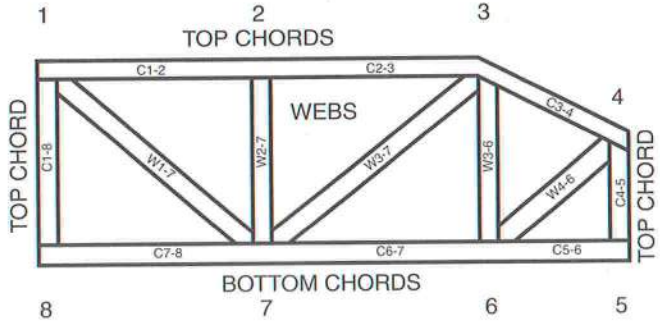

JOINTS ARE GENERALLY NUMBERED/LETTERED CLOCKWISE AROUND THE TRUSS STARTING AT THE JOINT FARTHEST TO THE LEFT.

CHORDS AND WEBS ARE IDENTIFIED BY END JOINT NUMBERS/LETTERS.

CONNECTOR PLATE CODE APPROVALS

BOCA	96-31, 95-43, 96-20-1, 96-67, 84-32
ICBO	4922, 5243, 5363, 3907
SBCCI	9667, 9730, 9604B, 9511, 9432A

MiTek®

TEE-LOK®

⚠General Safety Notes

Failure to Follow Could Cause Property Damage or Personal Injury

1. Additional stability bracing for truss system, e.g. diagonal or X-bracing, is always required. See BCSI1.
2. Never exceed the design loading shown and never stack materials on inadequately braced trusses.
3. Provide copies of this truss design to the building designer, erection supervisor, property owner and all other interested parties.
4. Cut members to bear tightly against each other.
5. Place plates on each face of truss at each joint and embed fully. Knots and wane at joint locations are regulated by ANSI/TPI1.
6. Design assumes trusses will be suitably protected from the environment in accord with ANSI/TPI1.
7. Unless otherwise noted, moisture content of lumber shall not exceed 19% at time of fabrication.
8. Unless expressly noted, this design is not applicable for use with fire retardant or preservative treated lumber.
9. Camber is a non-structural consideration and is the responsibility of truss fabricator. General practice is to camber for dead load deflection.
10. Plate type, size, orientation and location dimensions shown indicate minimum plating requirements.
11. Lumber used shall be of the species and size, and in all respects, equal to or better than that specified.
12. Top chords must be sheathed or purlins provided at spacing shown on design.
13. Bottom chords require lateral bracing at 10 ft. spacing, or less, if no ceiling is installed, unless otherwise noted.
14. Connections not shown are the responsibility of others.
15. Do not cut or alter truss member or plate without prior approval of a professional engineer.
16. Install and load vertically unless indicated otherwise.

© 2004 Mitek®

Job	Truss	Truss Type	Qty	Ply	SIMQUE HOMES
8833	H15	ROOF TRUSS	1	1	I9388127
					Job Reference (optional)

Reese Building Components, INC., Sylvester Ga.

6.200 s Oct 18 2005 MiTek Industries, Inc. Fri Nov 11 13:30:42 2005 Page 1

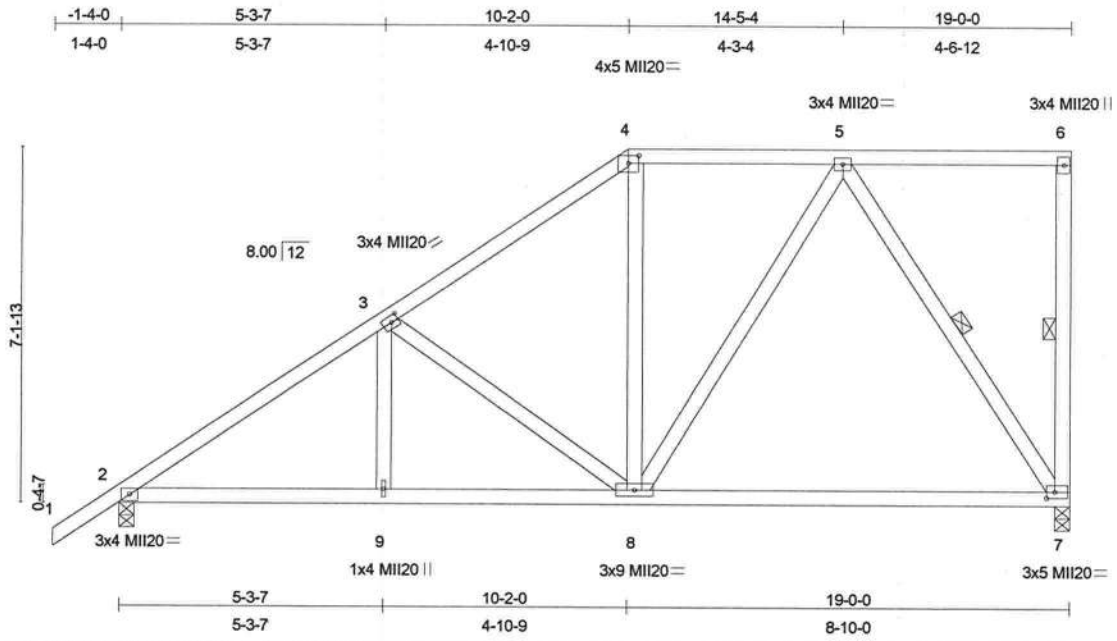

Plate Offsets (X,Y): [3:0-1-12,0-1-8], [4:0-2-8,0-1-13], [7:0-2-0,0-1-8]

LOADING (psf)		SPACING	2-0-0	CSI		DEFL	in	(loc)	l/defl	L/d	PLATES	GRIP
TCLL	20.0	Plates Increase	1.25	TC	0.32	Vert(LL)	0.05	7-8	>999	360	MII20	249/190
TCDL	10.0	Lumber Increase	1.25	BC	0.34	Vert(TL)	-0.12	7-8	>999	240		
BCLL	0.0	Rep Stress Incr	YES	WB	0.31	Horz(TL)	0.02	7	n/a	n/a		
BCDL	10.0	Code FBC2001/ANSI95		(Matrix)							Weight: 118 lb	

LUMBER
TOP CHORD 2 X 4 SYP No.2
BOT CHORD 2 X 4 SYP No.2
WEBS 2 X 4 SYP No.3

BRACING
TOP CHORD Sheathed or 5-11-4 oc purlins, except end verticals.
BOT CHORD Rigid ceiling directly applied or 9-6-0 oc bracing.
WEBS 1 Row at midpt 6-7, 5-7

This truss design is based upon the building code shown. This code has been specified by the project engineer/architect, or building designer. The applicability of this code in any particular jurisdiction should be confirmed with the building official prior to truss fabrication. This determination is not the responsibility of the component/truss designer.

REACTIONS (lb/size) 7=745/0-3-8, 2=841/0-3-8
Max Horz 2=394(load case 3)
Max Uplift7=-338(load case 3), 2=-360(load case 4)

FORCES (lb) - Maximum Compression/Maximum Tension
TOP CHORD 1-2=0/44, 2-3=-1073/320, 3-4=-721/270, 4-5=-531/298, 5-6=-83/122, 6-7=-125/131
BOT CHORD 2-9=-419/814, 8-9=-419/814, 7-8=-270/367
WEBS 3-9=0/96, 3-8=-350/290, 4-8=0/84, 5-8=-154/316, 5-7=-638/362

NOTES
1) Wind: ASCE 7-98; 110mph (3-second gust); h=15ft; TCDL=5.0psf; BCDL=5.0psf; Category II; Exp C; enclosed; MWFRS gable end zone; cantilever left and right exposed ; end vertical left and right exposed; Lumber DOL=1.33 plate grip DOL=1.33.
2) Provide adequate drainage to prevent water ponding.
3) Provide mechanical connection (by others) of truss to bearing plate capable of withstanding 338 lb uplift at joint 7 and 360 lb uplift at joint 2.

LOAD CASE(S) Standard

Juan Garcia, FL Lic #58521
MiTek Industries, Inc.
14515 North Outer Forty Drive
Suite 300
Chesterfield, MO, 63017
FL Cert.#6634

November 14,2005

WARNING - Verify design parameters and READ NOTES ON THIS AND REVERSE SIDE BEFORE USE.
Design valid for use only with MiTek connectors. This design is based only upon parameters shown, and is for an individual building component. Applicability of design parameters and proper incorporation of component is responsibility of building designer - not truss designer. Bracing shown is for lateral support of individual web members only. Additional temporary bracing to insure stability during construction is the responsibility of the erector. Additional permanent bracing of the overall structure is the responsibility of the building designer. For general guidance regarding fabrication, quality control, storage, delivery, erection and bracing, consult ANSI/TPI1 Quality Criteria, DSB-89 and BCSI1 Building Component Safety Information available from Truss Plate Institute, 583 D'Onofrio Drive, Madison, WI 53719.

14515 N. Outer Forty,
Suite #300
Chesterfield, MO 63017

MiTek®

Symbols

PLATE LOCATION AND ORIENTATION

*Center plate on joint unless x,y offsets are indicated. Dimensions are in ft-in-sixteenths. Apply plates to both sides of truss and securely seat.

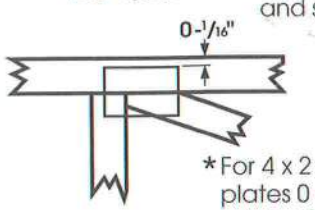

*For 4 x 2 orientation, locate plates 0 - 1/16" from outside edge of truss.

*This symbol indicates the required direction of slots in connector plates.

*** Plate location details available in MiTek 20/20 software or upon request.**

PLATE SIZE

4 x 4 — The first dimension is the width perpendicular to slots. Second dimension is the length parallel to slots.

LATERAL BRACING

Indicated by symbol shown and/or by text in the bracing section of the output. Use T, I or Eliminator bracing if indicated.

BEARING

Indicates location where bearings (supports) occur. Icons vary but reaction section indicates joint number where bearings occur.

Industry Standards:

ANSI/TPI1: National Design Specification for Metal Plate Connected Wood Truss Construction.
DSB-89: Design Standard for Bracing.
BCSI1: Building Component Safety Information, Guide to Good Practice for Handling, Installing & Bracing of Metal Plate Connected Wood Trusses.

Numbering System

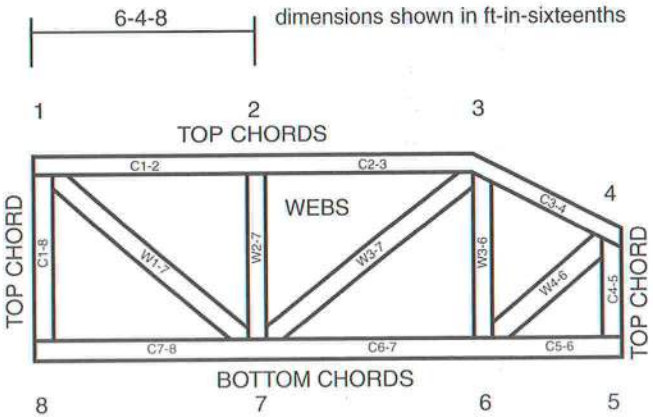

JOINTS ARE GENERALLY NUMBERED/LETTERED CLOCKWISE AROUND THE TRUSS STARTING AT THE JOINT FARTHEST TO THE LEFT.

CHORDS AND WEBS ARE IDENTIFIED BY END JOINT NUMBERS/LETTERS.

CONNECTOR PLATE CODE APPROVALS

BOCA	96-31, 95-43, 96-20-1, 96-67, 84-32
ICBO	4922, 5243, 5363, 3907
SBCCI	9667, 9730, 9604B, 9511, 9432A

MiTek®

TEE-LOK®

⚠General Safety Notes

Failure to Follow Could Cause Property Damage or Personal Injury

1. Additional stability bracing for truss system, e.g. diagonal or X-bracing, is always required. See BCSI1.
2. Never exceed the design loading shown and never stack materials on inadequately braced trusses.
3. Provide copies of this truss design to the building designer, erection supervisor, property owner and all other interested parties.
4. Cut members to bear tightly against each other.
5. Place plates on each face of truss at each joint and embed fully. Knots and wane at joint locations are regulated by ANSI/TPI1.
6. Design assumes trusses will be suitably protected from the environment in accord with ANSI/TPI1.
7. Unless otherwise noted, moisture content of lumber shall not exceed 19% at time of fabrication.
8. Unless expressly noted, this design is not applicable for use with fire retardant or preservative treated lumber.
9. Camber is a non-structural consideration and is the responsibility of truss fabricator. General practice is to camber for dead load deflection.
10. Plate type, size, orientation and location dimensions shown indicate minimum plating requirements.
11. Lumber used shall be of the species and size, and in all respects, equal to or better than that specified.
12. Top chords must be sheathed or purlins provided at spacing shown on design.
13. Bottom chords require lateral bracing at 10 ft. spacing, or less, if no ceiling is installed, unless otherwise noted.
14. Connections not shown are the responsibility of others.
15. Do not cut or alter truss member or plate without prior approval of a professional engineer.
16. Install and load vertically unless indicated otherwise.

© 2004 Mitek®

Job	Truss	Truss Type	Qty	Ply	SIMQUE HOMES
8833	H16	ROOF TRUSS	1	1	I9388128
					Job Reference (optional)

Reese Building Components, INC., Sylvester Ga.

6.200 s Oct 18 2005 MiTek Industries, Inc. Fri Nov 11 13:30:42 2005 Page 1

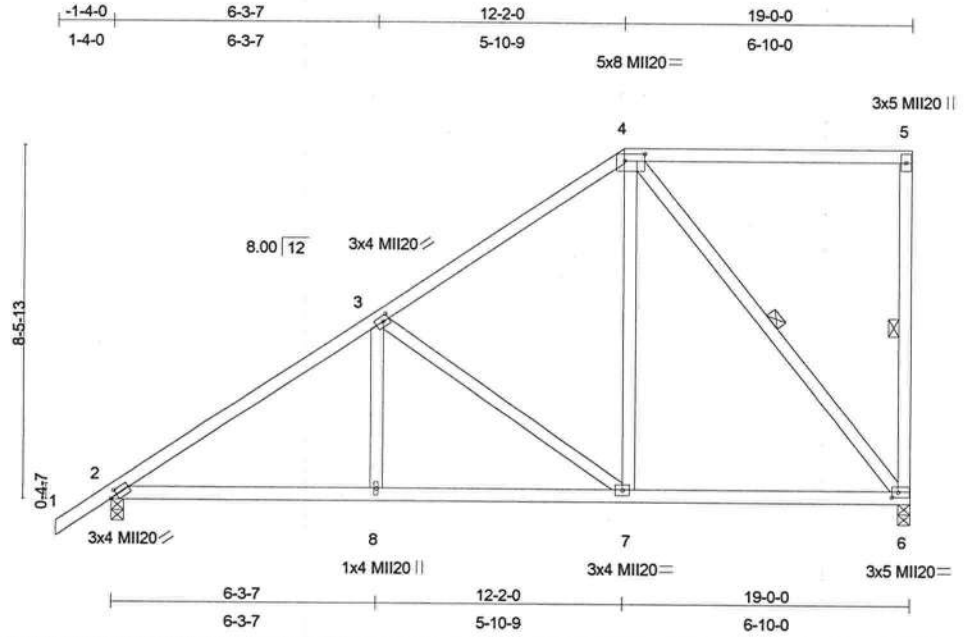

Plate Offsets (X,Y): [2:0-1-15,0-1-8], [3:0-1-12,0-1-8], [4:0-5-12,0-2-0], [6:0-1-12,0-1-8]

LOADING (psf)		SPACING	2-0-0	CSI		DEFL	in	(loc)	l/defl	L/d	PLATES	GRIP
TCLL	20.0	Plates Increase	1.25	TC	0.60	Vert(LL)	0.05	6-7	>999	360	MII20	249/190
TCDL	10.0	Lumber Increase	1.25	BC	0.30	Vert(TL)	-0.08	2-8	>999	240		
BCLL	0.0	Rep Stress Incr	YES	WB	0.49	Horz(TL)	0.02	6	n/a	n/a		
BCDL	10.0	Code FBC2001/ANSI95		(Matrix)							Weight: 118 lb	

LUMBER
TOP CHORD 2 X 4 SYP No.2
BOT CHORD 2 X 4 SYP No.2
WEBS 2 X 4 SYP No.3

BRACING
TOP CHORD Sheathed or 5-10-10 oc purlins, except end verticals.
BOT CHORD Rigid ceiling directly applied or 9-8-12 oc bracing.
WEBS 1 Row at midpt 5-6, 4-6

REACTIONS (lb/size) 6=745/0-3-8, 2=841/0-3-8
Max Horz 2=467(load case 3)
Max Uplift6=-339(load case 3), 2=-366(load case 4)

This truss design is based upon the building code shown. This code has been specified by the project engineer/architect, or building designer. The applicability of this code in any particular jurisdiction should be confirmed with the building official prior to truss fabrication. This determination is not the responsibility of the component/truss designer.

FORCES (lb) - Maximum Compression/Maximum Tension
TOP CHORD 1-2=0/44, 2-3=-1045/317, 3-4=-599/255, 4-5=-83/157, 5-6=-185/211
BOT CHORD 2-8=-402/779, 7-8=-402/779, 6-7=-284/426
WEBS 3-8=0/145, 3-7=-440/356, 4-7=-162/374, 4-6=-637/285

NOTES
1) Wind: ASCE 7-98; 110mph (3-second gust); h=15ft; TCDL=5.0psf; BCDL=5.0psf; Category II; Exp C; enclosed; MWFRS gable end zone; cantilever left and right exposed ; end vertical left and right exposed; Lumber DOL=1.33 plate grip DOL=1.33.
2) Provide adequate drainage to prevent water ponding.
3) Provide mechanical connection (by others) of truss to bearing plate capable of withstanding 339 lb uplift at joint 6 and 366 lb uplift at joint 2.

LOAD CASE(S) Standard

Juan Garcia, FL Lic #58521
MiTek Industries, Inc.
14515 North Outer Forty Drive
Suite 300
Chesterfield, MO, 63017
FL Cert.#6634

November 14,2005

WARNING - Verify design parameters and READ NOTES ON THIS AND REVERSE SIDE BEFORE USE.
Design valid for use only with MiTek connectors. This design is based only upon parameters shown, and is for an individual building component. Applicability of design parameters and proper incorporation of component is responsibility of building designer - not truss designer. Bracing shown is for lateral support of individual web members only. Additional temporary bracing to insure stability during construction is the responsibility of the erector. Additional permanent bracing of the overall structure is the responsibility of the building designer. For general guidance regarding fabrication, quality control, storage, delivery, erection and bracing, consult ANSI/TPI1 Quality Criteria, DSB-89 and BCSI1 Building Component Safety Information available from Truss Plate Institute, 583 D'Onofrio Drive, Madison, WI 53719.

14515 N. Outer Forty,
Suite #300
Chesterfield, MO 63017

MiTek®

Symbols

PLATE LOCATION AND ORIENTATION

*Center plate on joint unless x,y offsets are indicated. Dimensions are in ft-in-sixteenths. Apply plates to both sides of truss and securely seat.

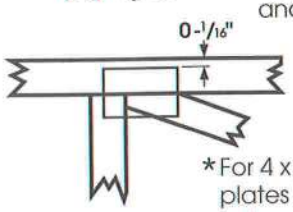

*For 4 x 2 orientation, locate plates 0 - 1/16" from outside edge of truss.

*This symbol indicates the required direction of slots in connector plates.

*** Plate location details available in MiTek 20/20 software or upon request.**

PLATE SIZE

4 x 4 — The first dimension is the width perpendicular to slots. Second dimension is the length parallel to slots.

LATERAL BRACING

Indicated by symbol shown and/or by text in the bracing section of the output. Use T, I or Eliminator bracing if indicated.

BEARING

Indicates location where bearings (supports) occur. Icons vary but reaction section indicates joint number where bearings occur.

Industry Standards:

ANSI/TPI1: National Design Specification for Metal Plate Connected Wood Truss Construction.
DSB-89: Design Standard for Bracing.
BCSI1: Building Component Safety Information, Guide to Good Practice for Handling, Installing & Bracing of Metal Plate Connected Wood Trusses.

Numbering System

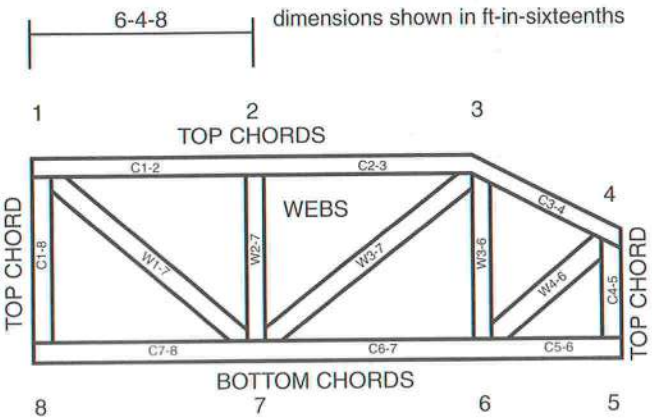

JOINTS ARE GENERALLY NUMBERED/LETTERED CLOCKWISE AROUND THE TRUSS STARTING AT THE JOINT FARTHEST TO THE LEFT.

CHORDS AND WEBS ARE IDENTIFIED BY END JOINT NUMBERS/LETTERS.

CONNECTOR PLATE CODE APPROVALS

BOCA	96-31, 95-43, 96-20-1, 96-67, 84-32
ICBO	4922, 5243, 5363, 3907
SBCCI	9667, 9730, 9604B, 9511, 9432A

MiTek®

TEE-LOK®

⚠General Safety Notes

Failure to Follow Could Cause Property Damage or Personal Injury

1. Additional stability bracing for truss system, e.g. diagonal or X-bracing, is always required. See BCSI1.
2. Never exceed the design loading shown and never stack materials on inadequately braced trusses.
3. Provide copies of this truss design to the building designer, erection supervisor, property owner and all other interested parties.
4. Cut members to bear tightly against each other.
5. Place plates on each face of truss at each joint and embed fully. Knots and wane at joint locations are regulated by ANSI/TPI1.
6. Design assumes trusses will be suitably protected from the environment in accord with ANSI/TPI1.
7. Unless otherwise noted, moisture content of lumber shall not exceed 19% at time of fabrication.
8. Unless expressly noted, this design is not applicable for use with fire retardant or preservative treated lumber.
9. Camber is a non-structural consideration and is the responsibility of truss fabricator. General practice is to camber for dead load deflection.
10. Plate type, size, orientation and location dimensions shown indicate minimum plating requirements.
11. Lumber used shall be of the species and size, and in all respects, equal to or better than that specified.
12. Top chords must be sheathed or purlins provided at spacing shown on design.
13. Bottom chords require lateral bracing at 10 ft. spacing, or less, if no ceiling is installed, unless otherwise noted.
14. Connections not shown are the responsibility of others.
15. Do not cut or alter truss member or plate without prior approval of a professional engineer.
16. Install and load vertically unless indicated otherwise.

© 2004 Mitek®

Job	Truss	Truss Type	Qty	Ply	SIMQUE HOMES
8833	H17	ROOF TRUSS	1	1	I9388129
					Job Reference (optional)

Reese Building Components, INC., Sylvester Ga.

6.200 s Oct 18 2005 MiTek Industries, Inc. Fri Nov 11 13:30:43 2005 Page 1

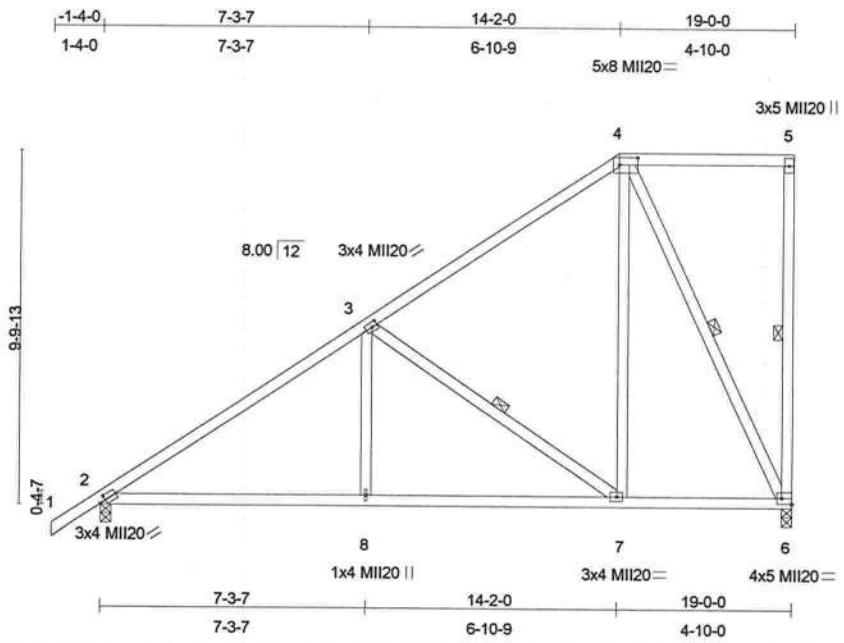

Plate Offsets (X,Y): [2:0-1-15,0-1-8], [3:0-1-12,0-1-8], [4:0-6-4,0-2-4], [6:Edge,0-2-0]

LOADING (psf)		SPACING	2-0-0	CSI		DEFL	in	(loc)	l/defl	L/d	PLATES	GRIP
TCLL	20.0	Plates Increase	1.25	TC	0.60	Vert(LL)	0.08	2-8	>999	360	MII20	249/190
TCDL	10.0	Lumber Increase	1.25	BC	0.38	Vert(TL)	-0.12	2-8	>999	240		
BCLL	0.0	Rep Stress Incr	YES	WB	0.52	Horz(TL)	0.02	6	n/a	n/a		
BCDL	10.0	Code FBC2001/ANSI95		(Matrix)							Weight: 125 lb	

LUMBER
TOP CHORD 2 X 4 SYP No.2
BOT CHORD 2 X 4 SYP No.2
WEBS 2 X 4 SYP No.3

BRACING
TOP CHORD Sheathed or 5-9-13 oc purlins, except end verticals.
BOT CHORD Rigid ceiling directly applied or 9-9-0 oc bracing.
WEBS 1 Row at midpt 5-6, 3-7, 4-6

REACTIONS (lb/size) 6=745/0-3-8, 2=841/0-3-8
Max Horz 2=540(load case 3)
Max Uplift6=-340(load case 3), 2=-364(load case 4)

This truss design is based upon the building code shown. This code has been specified by the project engineer/architect, or building designer. The applicability of this code in any particular jurisdiction should be confirmed with the building official prior to truss fabrication. This determination is not the responsibility of the component/truss designer.

FORCES (lb) - Maximum Compression/Maximum Tension
TOP CHORD 1-2=0/44, 2-3=-1016/300, 3-4=-476/222, 4-5=-105/170, 5-6=-107/189
BOT CHORD 2-8=-392/747, 7-8=-392/747, 6-7=-242/300
WEBS 3-8=0/178, 3-7=-553/425, 4-7=-229/427, 4-6=-667/337

NOTES
1) Wind: ASCE 7-98; 110mph (3-second gust); h=15ft; TCDL=5.0psf; BCDL=5.0psf; Category II; Exp C; enclosed; MWFRS gable end zone; cantilever left and right exposed ; end vertical left and right exposed; Lumber DOL=1.33 plate grip DOL=1.33.
2) Provide adequate drainage to prevent water ponding.
3) Provide mechanical connection (by others) of truss to bearing plate capable of withstanding 340 lb uplift at joint 6 and 364 lb uplift at joint 2.

LOAD CASE(S) Standard

Juan Garcia, FL Lic #58521
MiTek Industries, Inc.
14515 North Outer Forty Drive
Suite 300
Chesterfield, MO, 63017
FL Cert.#6634

November 14,2005

WARNING - Verify design parameters and READ NOTES ON THIS AND REVERSE SIDE BEFORE USE.
Design valid for use only with MiTek connectors. This design is based only upon parameters shown, and is for an individual building component. Applicability of design parameters and proper incorporation of component is responsibility of building designer - not truss designer. Bracing shown is for lateral support of individual web members only. Additional temporary bracing to insure stability during construction is the responsibility of the erector. Additional permanent bracing of the overall structure is the responsibility of the building designer. For general guidance regarding fabrication, quality control, storage, delivery, erection and bracing, consult ANSI/TPI1 Quality Criteria, DSB-89 and BCSI1 Building Component Safety Information available from Truss Plate Institute, 583 D'Onofrio Drive, Madison, WI 53719.

14515 N. Outer Forty,
Suite #300
Chesterfield, MO 63017

MiTek®

Symbols

PLATE LOCATION AND ORIENTATION

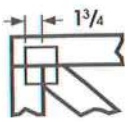

*Center plate on joint unless x,y offsets are indicated. Dimensions are in ft-in-sixteenths. Apply plates to both sides of truss and securely seat.

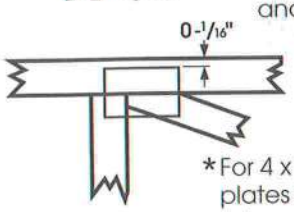

*For 4 x 2 orientation, locate plates 0 - 1/16" from outside edge of truss.

*This symbol indicates the required direction of slots in connector plates.

*** Plate location details available in MiTek 20/20 software or upon request.**

PLATE SIZE

4 x 4 — The first dimension is the width perpendicular to slots. Second dimension is the length parallel to slots.

LATERAL BRACING

Indicated by symbol shown and/or by text in the bracing section of the output. Use T, I or Eliminator bracing if indicated.

BEARING

Indicates location where bearings (supports) occur. Icons vary but reaction section indicates joint number where bearings occur.

Industry Standards:

ANSI/TPI1: National Design Specification for Metal Plate Connected Wood Truss Construction.
DSB-89: Design Standard for Bracing.
BCSI1: Building Component Safety Information, Guide to Good Practice for Handling, Installing & Bracing of Metal Plate Connected Wood Trusses.

Numbering System

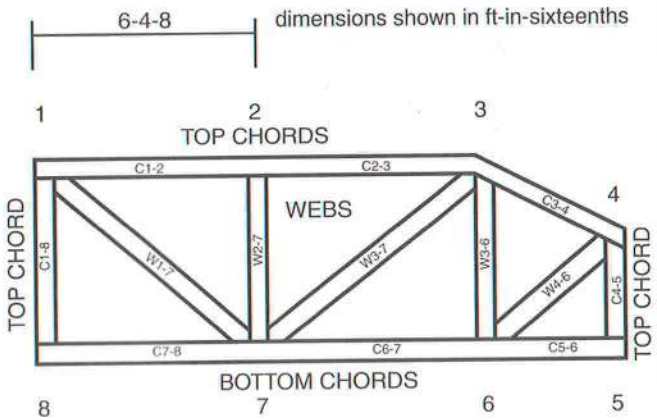

JOINTS ARE GENERALLY NUMBERED/LETTERED CLOCKWISE AROUND THE TRUSS STARTING AT THE JOINT FARTHEST TO THE LEFT.

CHORDS AND WEBS ARE IDENTIFIED BY END JOINT NUMBERS/LETTERS.

CONNECTOR PLATE CODE APPROVALS

BOCA	96-31, 95-43, 96-20-1, 96-67, 84-32
ICBO	4922, 5243, 5363, 3907
SBCCI	9667, 9730, 9604B, 9511, 9432A

MiTek®

TEE-LOK®

⚠General Safety Notes

Failure to Follow Could Cause Property Damage or Personal Injury

1. Additional stability bracing for truss system, e.g. diagonal or X-bracing, is always required. See BCSI1.
2. Never exceed the design loading shown and never stack materials on inadequately braced trusses.
3. Provide copies of this truss design to the building designer, erection supervisor, property owner and all other interested parties.
4. Cut members to bear tightly against each other.
5. Place plates on each face of truss at each joint and embed fully. Knots and wane at joint locations are regulated by ANSI/TPI1.
6. Design assumes trusses will be suitably protected from the environment in accord with ANSI/TPI1.
7. Unless otherwise noted, moisture content of lumber shall not exceed 19% at time of fabrication.
8. Unless expressly noted, this design is not applicable for use with fire retardant or preservative treated lumber.
9. Camber is a non-structural consideration and is the responsibility of truss fabricator. General practice is to camber for dead load deflection.
10. Plate type, size, orientation and location dimensions shown indicate minimum plating requirements.
11. Lumber used shall be of the species and size, and in all respects, equal to or better than that specified.
12. Top chords must be sheathed or purlins provided at spacing shown on design.
13. Bottom chords require lateral bracing at 10 ft. spacing, or less, if no ceiling is installed, unless otherwise noted.
14. Connections not shown are the responsibility of others.
15. Do not cut or alter truss member or plate without prior approval of a professional engineer.
16. Install and load vertically unless indicated otherwise.

© 2004 Mitek®

Job	Truss	Truss Type	Qty	Ply	SIMQUE HOMES
8833	H18	ROOF TRUSS	1	1	I9388130
					Job Reference (optional)

Reese Building Components, INC., Sylvester Ga.

6.200 s Oct 18 2005 MiTek Industries, Inc. Fri Nov 11 13:30:43 2005 Page 1

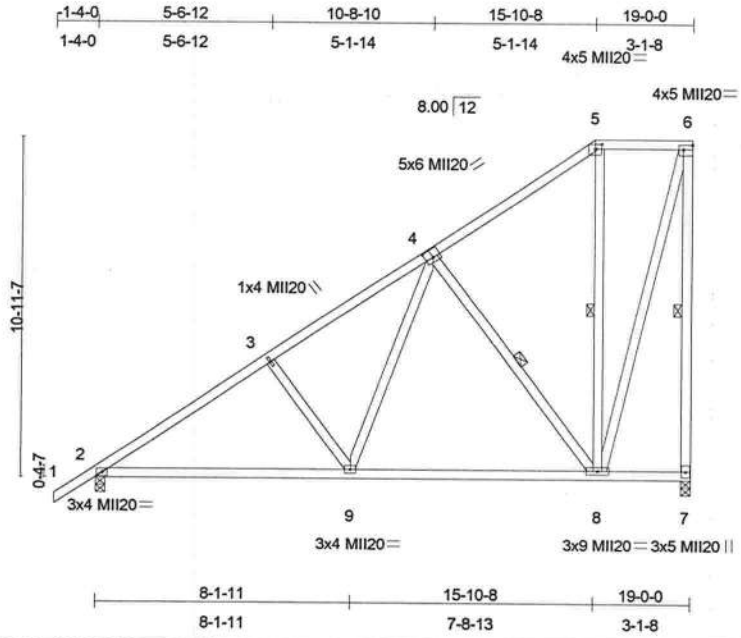

Plate Offsets (X,Y): [4:0-3-0,0-3-0], [5:0-2-8,0-1-13], [6:Edge,0-1-12]

LOADING (psf)		SPACING	2-0-0	CSI		DEFL	in	(loc)	l/defl	L/d	PLATES	GRIP
TCLL	20.0	Plates Increase	1.25	TC	0.66	Vert(LL)	0.05	2-9	>999	360	MII20	249/190
TCDL	10.0	Lumber Increase	1.25	BC	0.52	Vert(TL)	-0.12	2-9	>999	240		
BCLL	0.0	Rep Stress Incr	YES	WB	0.78	Horz(TL)	0.01	7	n/a	n/a		
BCDL	10.0	Code FBC2001/ANSI95		(Matrix)							Weight: 141 lb	

LUMBER
TOP CHORD 2 X 4 SYP No.2
BOT CHORD 2 X 4 SYP No.2
WEBS 2 X 4 SYP No.3

BRACING
TOP CHORD Sheathed or 5-11-12 oc purlins, except end verticals.
BOT CHORD Rigid ceiling directly applied or 9-7-3 oc bracing.
WEBS 1 Row at midpt 6-7, 4-8, 5-8

This truss design is based upon the building code shown. This code has been specified by the project engineer/architect, or building designer. The applicability of this code in any particular jurisdiction should be confirmed with the building official prior to truss fabrication. This determination is not the responsibility of the component/truss designer.

REACTIONS (lb/size) 7=745/0-3-8, 2=841/0-3-8
Max Horz 2=602(load case 3)
Max Uplift7=-344(load case 4), 2=-356(load case 4)

FORCES (lb) - Maximum Compression/Maximum Tension
TOP CHORD 1-2=0/44, 2-3=-1037/317, 3-4=-848/337, 4-5=-312/209, 5-6=-182/250, 6-7=-733/438
BOT CHORD 2-9=-429/786, 8-9=-315/494, 7-8=-124/184
WEBS 3-9=-263/300, 4-9=-167/419, 4-8=-516/429, 5-8=-162/285, 6-8=-362/699

NOTES
1) Wind: ASCE 7-98; 110mph (3-second gust); h=15ft; TCDL=5.0psf; BCDL=5.0psf; Category II; Exp C; enclosed; MWFRS gable end zone; cantilever left and right exposed ; end vertical left and right exposed; Lumber DOL=1.33 plate grip DOL=1.33.
2) Provide adequate drainage to prevent water ponding.
3) Provide mechanical connection (by others) of truss to bearing plate capable of withstanding 344 lb uplift at joint 7 and 356 lb uplift at joint 2.

LOAD CASE(S) Standard

Juan Garcia, FL Lic #58521
MiTek Industries, Inc.
14515 North Outer Forty Drive
Suite 300
Chesterfield, MO, 63017
FL Cert.#6634

November 14,2005

WARNING - Verify design parameters and READ NOTES ON THIS AND REVERSE SIDE BEFORE USE.
Design valid for use only with MiTek connectors. This design is based only upon parameters shown, and is for an individual building component. Applicability of design parameters and proper incorporation of component is responsibility of building designer - not truss designer. Bracing shown is for lateral support of individual web members only. Additional temporary bracing to insure stability during construction is the responsibility of the erector. Additional permanent bracing of the overall structure is the responsibility of the building designer. For general guidance regarding fabrication, quality control, storage, delivery, erection and bracing, consult ANSI/TPI1 Quality Criteria, DSB-89 and BCSI1 Building Component Safety Information available from Truss Plate Institute, 583 D'Onofrio Drive, Madison, WI 53719.

14515 N. Outer Forty,
Suite #300
Chesterfield, MO 63017

MiTek®

Symbols

PLATE LOCATION AND ORIENTATION

*Center plate on joint unless x,y offsets are indicated. Dimensions are in ft-in-sixteenths. Apply plates to both sides of truss and securely seat.

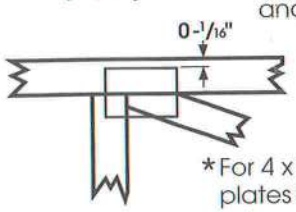

*For 4 x 2 orientation, locate plates 0 - 1/16" from outside edge of truss.

*This symbol indicates the required direction of slots in connector plates.

*** Plate location details available in MiTek 20/20 software or upon request.**

PLATE SIZE

4 x 4 — The first dimension is the width perpendicular to slots. Second dimension is the length parallel to slots.

LATERAL BRACING

Indicated by symbol shown and/or by text in the bracing section of the output. Use T, I or Eliminator bracing if indicated.

BEARING

Indicates location where bearings (supports) occur. Icons vary but reaction section indicates joint number where bearings occur.

Industry Standards:

ANSI/TPI1: National Design Specification for Metal Plate Connected Wood Truss Construction.
DSB-89: Design Standard for Bracing.
BCSI1: Building Component Safety Information, Guide to Good Practice for Handling, Installing & Bracing of Metal Plate Connected Wood Trusses.

Numbering System

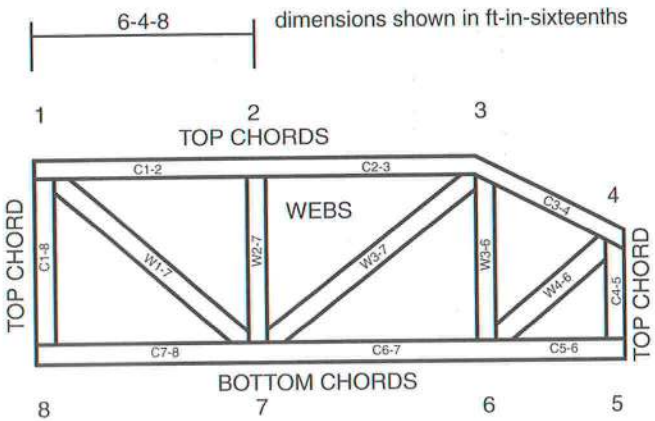

JOINTS ARE GENERALLY NUMBERED/LETTERED CLOCKWISE AROUND THE TRUSS STARTING AT THE JOINT FARTHEST TO THE LEFT.

CHORDS AND WEBS ARE IDENTIFIED BY END JOINT NUMBERS/LETTERS.

CONNECTOR PLATE CODE APPROVALS

BOCA	96-31, 95-43, 96-20-1, 96-67, 84-32
ICBO	4922, 5243, 5363, 3907
SBCCI	9667, 9730, 9604B, 9511, 9432A

MiTek®

TEE-LOK®

⚠General Safety Notes

Failure to Follow Could Cause Property Damage or Personal Injury

1. Additional stability bracing for truss system, e.g. diagonal or X-bracing, is always required. See BCSI1.
2. Never exceed the design loading shown and never stack materials on inadequately braced trusses.
3. Provide copies of this truss design to the building designer, erection supervisor, property owner and all other interested parties.
4. Cut members to bear tightly against each other.
5. Place plates on each face of truss at each joint and embed fully. Knots and wane at joint locations are regulated by ANSI/TPI1.
6. Design assumes trusses will be suitably protected from the environment in accord with ANSI/TPI1.
7. Unless otherwise noted, moisture content of lumber shall not exceed 19% at time of fabrication.
8. Unless expressly noted, this design is not applicable for use with fire retardant or preservative treated lumber.
9. Camber is a non-structural consideration and is the responsibility of truss fabricator. General practice is to camber for dead load deflection.
10. Plate type, size, orientation and location dimensions shown indicate minimum plating requirements.
11. Lumber used shall be of the species and size, and in all respects, equal to or better than that specified.
12. Top chords must be sheathed or purlins provided at spacing shown on design.
13. Bottom chords require lateral bracing at 10 ft. spacing, or less, if no ceiling is installed, unless otherwise noted.
14. Connections not shown are the responsibility of others.
15. Do not cut or alter truss member or plate without prior approval of a professional engineer.
16. Install and load vertically unless indicated otherwise.

© 2004 Mitek®

Job	Truss	Truss Type	Qty	Ply	SIMQUE HOMES
8833	H19	ROOF TRUSS	1	2	I9388131 Job Reference (optional)

Reese Building Components, INC., Sylvester Ga.

6.200 s Oct 18 2005 MiTek Industries, Inc. Fri Nov 11 13:30:44 2005 Page 1

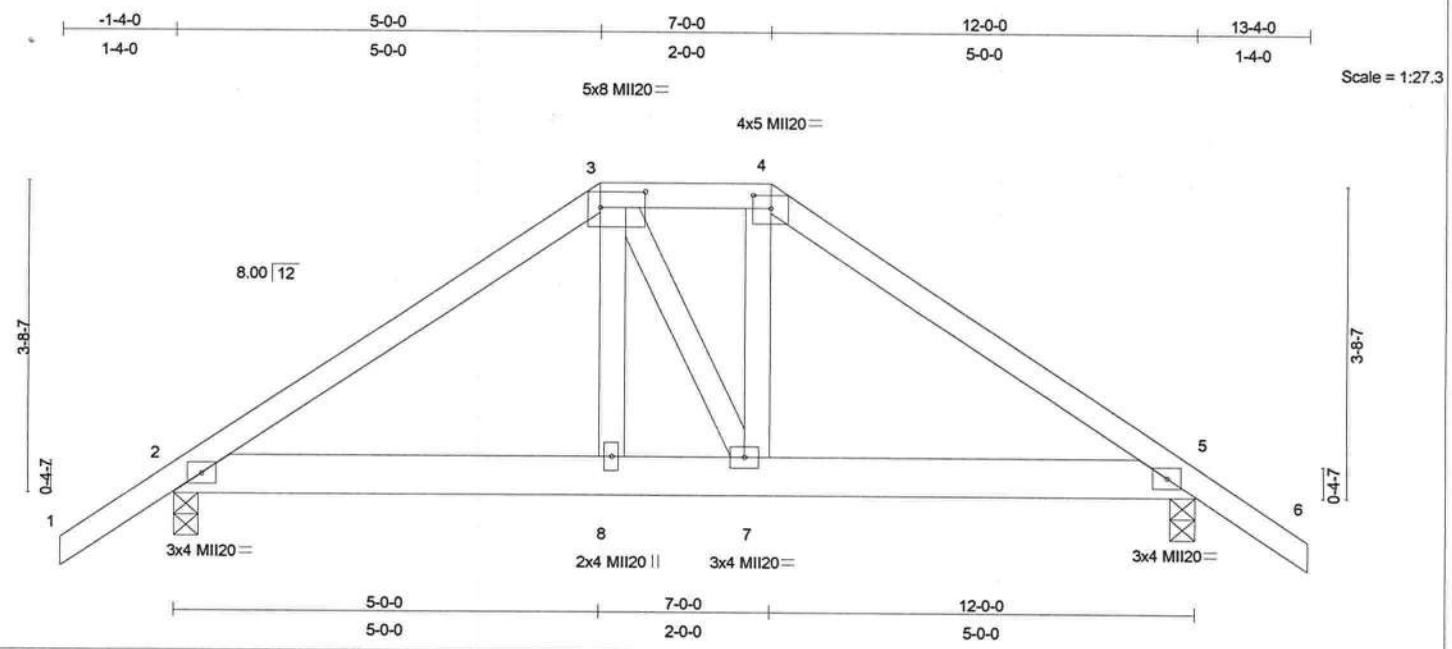

Plate Offsets (X,Y): [3:0-6-4,0-2-4], [4:0-2-8,0-1-13]

LOADING (psf)		SPACING	2-0-0	CSI		DEFL	in	(loc)	l/defl	L/d	PLATES	GRIP
TCLL	20.0	Plates Increase	1.25	TC	0.16	Vert(LL)	0.01	8	>999	360	MII20	249/190
TCDL	10.0	Lumber Increase	1.25	BC	0.10	Vert(TL)	0.01	8	>999	240		
BCLL	0.0	Rep Stress Incr	NO	WB	0.06	Horz(TL)	0.00	5	n/a	n/a		
BCDL	10.0	Code FBC2001/ANSI95		(Matrix)							Weight: 136 lb	

LUMBER
TOP CHORD 2 X 4 SYP No.2
BOT CHORD 2 X 6 SYP No.2
WEBS 2 X 4 SYP No.3

BRACING
TOP CHORD Sheathed or 6-0-0 oc purlins.
BOT CHORD Rigid ceiling directly applied or 10-0-0 oc bracing.

REACTIONS (lb/size) 2=843/0-3-8, 5=843/0-3-8
Max Horz 2=-145(load case 2)
Max Uplift2=-529(load case 4), 5=-529(load case 5)

This truss design is based upon the building code shown. This code has been specified by the project engineer/architect, or building designer. The applicability of this code in any particular jurisdiction should be confirmed with the building official prior to truss fabrication. This determination is not the responsibility of the component/truss designer.

FORCES (lb) - Maximum Compression/Maximum Tension
TOP CHORD 1-2=0/47, 2-3=-1086/617, 3-4=-846/588, 4-5=-1092/619, 5-6=0/47
BOT CHORD 2-8=-498/826, 7-8=-506/840, 5-7=-425/832
WEBS 3-8=-195/317, 3-7=-155/142, 4-7=-272/385

NOTES
1) 2-ply truss to be connected together with 10d Common(.148"x3") Nails as follows:
Top chords connected as follows: 2 X 4 - 1 row at 0-9-0 oc.
Bottom chords connected as follows: 2 X 6 - 2 rows at 0-9-0 oc.
Webs connected as follows: 2 X 4 - 1 row at 0-9-0 oc.
2) All loads are considered equally applied to all plies, except if noted as front (F) or back (B) face in the LOAD CASE(S) section. Ply to ply connections have been provided to distribute only loads noted as (F) or (B), unless otherwise indicated.
3) Unbalanced roof live loads have been considered for this design.
4) Wind: ASCE 7-98; 110mph (3-second gust); h=15ft; TCDL=5.0psf; BCDL=5.0psf; Category II; Exp C; enclosed; MWFRS gable end zone; cantilever left and right exposed ; end vertical left and right exposed; Lumber DOL=1.33 plate grip DOL=1.33.
5) Provide adequate drainage to prevent water ponding.
6) Provide mechanical connection (by others) of truss to bearing plate capable of withstanding 529 lb uplift at joint 2 and 529 lb uplift at joint 5.
7) Girder carries hip end with 5-0-0 end setback.
8) Hanger(s) or other connection device(s) shall be provided sufficient to support concentrated load(s) 233 lb down and 219 lb up at 7-0-0, and 233 lb down and 219 lb up at 5-0-0 on bottom chord. The design/selection of such connection device(s) is the responsibility of others.

LOAD CASE(S) Standard
1) Regular: Lumber Increase=1.25, Plate Increase=1.25
Uniform Loads (plf)
Vert: 1-3=-60, 3-4=-101(F=-41), 4-6=-60, 2-8=-20, 7-8=-34(F=-14), 5-7=-20

Continued on page 2

Juan Garcia, FL Lic #58521
MiTek Industries, Inc.
14515 North Outer Forty Drive
Suite 300
Chesterfield, MO, 63017
FL Cert.#6634

November 14,2005

WARNING - Verify design parameters and READ NOTES ON THIS AND REVERSE SIDE BEFORE USE.
Design valid for use only with MiTek connectors. This design is based only upon parameters shown, and is for an individual building component. Applicability of design parameters and proper incorporation of component is responsibility of building designer - not truss designer. Bracing shown is for lateral support of individual web members only. Additional temporary bracing to insure stability during construction is the responsibility of the erector. Additional permanent bracing of the overall structure is the responsibility of the building designer. For general guidance regarding fabrication, quality control, storage, delivery, erection and bracing, consult ANSI/TPI1 Quality Criteria, DSB-89 and BCSI1 Building Component Safety Information available from Truss Plate Institute, 583 D'Onofrio Drive, Madison, WI 53719.

14515 N. Outer Forty,
Suite #300
Chesterfield, MO 63017

MiTek®

Symbols

PLATE LOCATION AND ORIENTATION

*Center plate on joint unless x,y offsets are indicated. Dimensions are in ft-in-sixteenths. Apply plates to both sides of truss and securely seat.

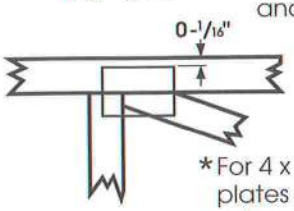

*For 4 x 2 orientation, locate plates 0 - 1/16" from outside edge of truss.

*This symbol indicates the required direction of slots in connector plates.

*** Plate location details available in MiTek 20/20 software or upon request.**

PLATE SIZE

4 x 4 — The first dimension is the width perpendicular to slots. Second dimension is the length parallel to slots.

LATERAL BRACING

Indicated by symbol shown and/or by text in the bracing section of the output. Use T, I or Eliminator bracing if indicated.

BEARING

Indicates location where bearings (supports) occur. Icons vary but reaction section indicates joint number where bearings occur.

Industry Standards:

ANSI/TPI1: National Design Specification for Metal Plate Connected Wood Truss Construction.
DSB-89: Design Standard for Bracing.
BCSI1: Building Component Safety Information, Guide to Good Practice for Handling, Installing & Bracing of Metal Plate Connected Wood Trusses.

Numbering System

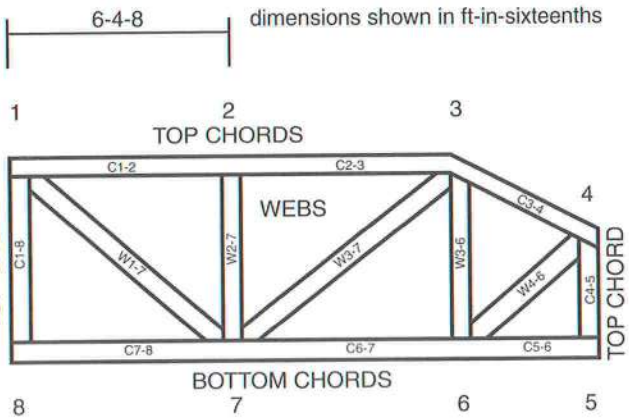

JOINTS ARE GENERALLY NUMBERED/LETTERED CLOCKWISE AROUND THE TRUSS STARTING AT THE JOINT FARTHEST TO THE LEFT.

CHORDS AND WEBS ARE IDENTIFIED BY END JOINT NUMBERS/LETTERS.

CONNECTOR PLATE CODE APPROVALS

BOCA	96-31, 95-43, 96-20-1, 96-67, 84-32
ICBO	4922, 5243, 5363, 3907
SBCCI	9667, 9730, 9604B, 9511, 9432A

MiTek®

TEE-LOK®

⚠General Safety Notes

Failure to Follow Could Cause Property Damage or Personal Injury

1. Additional stability bracing for truss system, e.g. diagonal or X-bracing, is always required. See BCSI1.
2. Never exceed the design loading shown and never stack materials on inadequately braced trusses.
3. Provide copies of this truss design to the building designer, erection supervisor, property owner and all other interested parties.
4. Cut members to bear tightly against each other.
5. Place plates on each face of truss at each joint and embed fully. Knots and wane at joint locations are regulated by ANSI/TPI1.
6. Design assumes trusses will be suitably protected from the environment in accord with ANSI/TPI1.
7. Unless otherwise noted, moisture content of lumber shall not exceed 19% at time of fabrication.
8. Unless expressly noted, this design is not applicable for use with fire retardant or preservative treated lumber.
9. Camber is a non-structural consideration and is the responsibility of truss fabricator. General practice is to camber for dead load deflection.
10. Plate type, size, orientation and location dimensions shown indicate minimum plating requirements.
11. Lumber used shall be of the species and size, and in all respects, equal to or better than that specified.
12. Top chords must be sheathed or purlins provided at spacing shown on design.
13. Bottom chords require lateral bracing at 10 ft. spacing, or less, if no ceiling is installed, unless otherwise noted.
14. Connections not shown are the responsibility of others.
15. Do not cut or alter truss member or plate without prior approval of a professional engineer.
16. Install and load vertically unless indicated otherwise.

© 2004 Mitek®

LOAD CASE(S) Standard
Concentrated Loads (lb)
Vert: 8=-233(F) 7=-233(F)

WARNING - Verify design parameters and READ NOTES ON THIS AND REVERSE SIDE BEFORE USE.
Design valid for use only with MiTek connectors. This design is based only upon parameters shown, and is for an individual building component. Applicability of design parameters and proper incorporation of component is responsibility of building designer - not truss designer. Bracing shown is for lateral support of individual web members only. Additional temporary bracing to insure stability during construction is the responsibility of the erector. Additional permanent bracing of the overall structure is the responsibility of the building designer. For general guidance regarding fabrication, quality control, storage, delivery, erection and bracing, consult **ANSI/TPI1 Quality Criteria, DSB-89 and BCSI1 Building Component Safety Information** available from Truss Plate Institute, 583 D'Onofrio Drive, Madison, WI 53719.

14515 N. Outer Forty,
Suite #300
Chesterfield, MO 63017

MiTek®

Symbols

PLATE LOCATION AND ORIENTATION

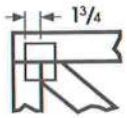

*Center plate on joint unless x,y offsets are indicated. Dimensions are in ft-in-sixteenths. Apply plates to both sides of truss and securely seat.

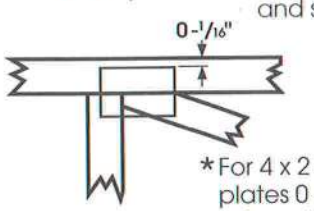

*For 4 x 2 orientation, locate plates 0 - 1/16" from outside edge of truss.

*This symbol indicates the required direction of slots in connector plates.

*** Plate location details available in MiTek 20/20 software or upon request.**

PLATE SIZE

4 x 4 — The first dimension is the width perpendicular to slots. Second dimension is the length parallel to slots.

LATERAL BRACING

Indicated by symbol shown and/or by text in the bracing section of the output. Use T, I or Eliminator bracing if indicated.

BEARING

Indicates location where bearings (supports) occur. Icons vary but reaction section indicates joint number where bearings occur.

Industry Standards:

ANSI/TPI1: National Design Specification for Metal Plate Connected Wood Truss Construction.
DSB-89: Design Standard for Bracing.
BCSI1: Building Component Safety Information, Guide to Good Practice for Handling, Installing & Bracing of Metal Plate Connected Wood Trusses.

Numbering System

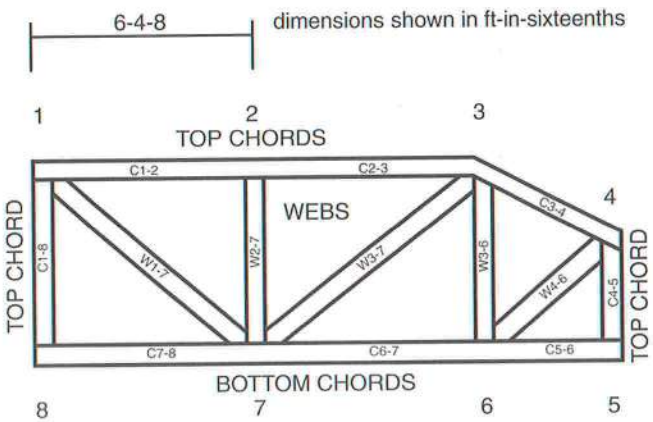

JOINTS ARE GENERALLY NUMBERED/LETTERED CLOCKWISE AROUND THE TRUSS STARTING AT THE JOINT FARTHEST TO THE LEFT.

CHORDS AND WEBS ARE IDENTIFIED BY END JOINT NUMBERS/LETTERS.

CONNECTOR PLATE CODE APPROVALS

BOCA	96-31, 95-43, 96-20-1, 96-67, 84-32
ICBO	4922, 5243, 5363, 3907
SBCCI	9667, 9730, 9604B, 9511, 9432A

MiTek®

TEE-LOK®

⚠General Safety Notes

Failure to Follow Could Cause Property Damage or Personal Injury

1. Additional stability bracing for truss system, e.g. diagonal or X-bracing, is always required. See BCSI1.
2. Never exceed the design loading shown and never stack materials on inadequately braced trusses.
3. Provide copies of this truss design to the building designer, erection supervisor, property owner and all other interested parties.
4. Cut members to bear tightly against each other.
5. Place plates on each face of truss at each joint and embed fully. Knots and wane at joint locations are regulated by ANSI/TPI1.
6. Design assumes trusses will be suitably protected from the environment in accord with ANSI/TPI1.
7. Unless otherwise noted, moisture content of lumber shall not exceed 19% at time of fabrication.
8. Unless expressly noted, this design is not applicable for use with fire retardant or preservative treated lumber.
9. Camber is a non-structural consideration and is the responsibility of truss fabricator. General practice is to camber for dead load deflection.
10. Plate type, size, orientation and location dimensions shown indicate minimum plating requirements.
11. Lumber used shall be of the species and size, and in all respects, equal to or better than that specified.
12. Top chords must be sheathed or purlins provided at spacing shown on design.
13. Bottom chords require lateral bracing at 10 ft. spacing, or less, if no ceiling is installed, unless otherwise noted.
14. Connections not shown are the responsibility of others.
15. Do not cut or alter truss member or plate without prior approval of a professional engineer.
16. Install and load vertically unless indicated otherwise.

© 2004 Mitek®

Job	Truss	Truss Type	Qty	Ply	SIMQUE HOMES
8833	H2	ROOF TRUSS	1	1	I9388132 Job Reference (optional)

Reese Building Components, INC., Sylvester Ga. 6.200 s Oct 18 2005 MiTek Industries, Inc. Fri Nov 11 13:30:44 2005 Page 1

4-8-7	9-0-0	16-7-15	24-2-1	31-10-0	36-1-9	40-10-0	42-2-0
4-8-7	4-3-9	7-7-15	7-6-3	7-7-15	4-3-9	4-8-7	1-4-0

Scale = 1:73.2

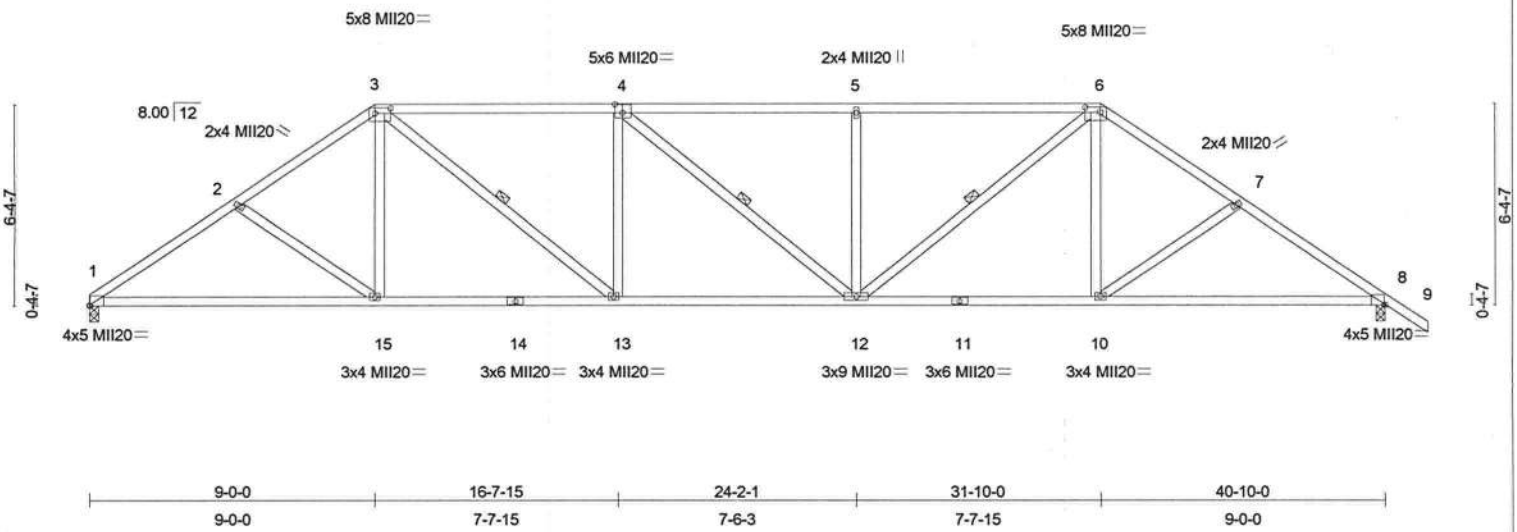

9-0-0	16-7-15	24-2-1	31-10-0	40-10-0
9-0-0	7-7-15	7-6-3	7-7-15	9-0-0

Plate Offsets (X,Y): [1:0-0-7,0-0-2], [3:0-5-12,0-2-0], [4:0-3-0,0-3-4], [6:0-5-12,0-2-0], [8:0-0-7,0-0-2]

LOADING (psf)		SPACING	2-0-0	CSI		DEFL	in	(loc)	l/defl	L/d	PLATES	GRIP
TCLL	20.0	Plates Increase	1.25	TC	0.58	Vert(LL)	0.23	12-13	>999	360	MII20	249/190
TCDL	10.0	Lumber Increase	1.25	BC	0.59	Vert(TL)	-0.37	12-13	>999	240		
BCLL	0.0	Rep Stress Incr	YES	WB	0.45	Horz(TL)	0.12	8	n/a	n/a		
BCDL	10.0	Code FBC2001/ANSI95		(Matrix)							Weight: 221 lb	

LUMBER
TOP CHORD 2 X 4 SYP No.2
BOT CHORD 2 X 4 SYP No.2
WEBS 2 X 4 SYP No.3

BRACING
TOP CHORD Sheathed or 3-5-3 oc purlins.
BOT CHORD Rigid ceiling directly applied or 5-6-7 oc bracing.
WEBS 1 Row at midpt 3-13, 4-12, 6-12

REACTIONS (lb/size) 1=1620/0-3-8, 8=1712/0-3-8
Max Horz 1=-279(load case 2)
Max Uplift1=-615(load case 3), 8=-643(load case 2)

This truss design is based upon the building code shown. This code has been specified by the project engineer/architect, or building designer. The applicability of this code in any particular jurisdiction should be confirmed with the building official prior to truss fabrication. This determination is not the responsibility of the component/truss designer.

FORCES (lb) - Maximum Compression/Maximum Tension
TOP CHORD 1-2=-2547/1049, 2-3=-2346/1035, 3-4=-2662/1291, 4-5=-2663/1293, 5-6=-2664/1293, 6-7=-2336/1031, 7-8=-2533/1043, 8-9=0/44
BOT CHORD 1-15=-1022/2048, 14-15=-934/1910, 13-14=-934/1910, 12-13=-1310/2672, 11-12=-698/1902, 10-11=-698/1902, 8-10=-755/2032
WEBS 2-15=-177/275, 3-15=-75/283, 3-13=-673/1029, 4-13=-496/490, 4-12=-80/100, 5-12=-458/432, 6-12=-681/1039, 6-10=-58/273, 7-10=-169/256

NOTES
1) Unbalanced roof live loads have been considered for this design.
2) Wind: ASCE 7-98; 110mph (3-second gust); h=15ft; TCDL=5.0psf; BCDL=5.0psf; Category II; Exp C; enclosed; MWFRS gable end zone; cantilever left and right exposed ; end vertical left and right exposed; Lumber DOL=1.33 plate grip DOL=1.33.
3) Provide adequate drainage to prevent water ponding.
4) Provide mechanical connection (by others) of truss to bearing plate capable of withstanding 615 lb uplift at joint 1 and 643 lb uplift at joint 8.

LOAD CASE(S) Standard

Juan Garcia, FL Lic #58521
MiTek Industries, Inc.
14515 North Outer Forty Drive
Suite 300
Chesterfield, MO, 63017
FL Cert.#6634

November 14,2005

WARNING - Verify design parameters and READ NOTES ON THIS AND REVERSE SIDE BEFORE USE.
Design valid for use only with MiTek connectors. This design is based only upon parameters shown, and is for an individual building component. Applicability of design parameters and proper incorporation of component is responsibility of building designer - not truss designer. Bracing shown is for lateral support of individual web members only. Additional temporary bracing to insure stability during construction is the responsibility of the erector. Additional permanent bracing of the overall structure is the responsibility of the building designer. For general guidance regarding fabrication, quality control, storage, delivery, erection and bracing, consult ANSI/TPI1 Quality Criteria, DSB-89 and BCSI1 Building Component Safety Information available from Truss Plate Institute, 583 D'Onofrio Drive, Madison, WI 53719.

14515 N. Outer Forty,
Suite #300
Chesterfield, MO 63017

MiTek®

Symbols

PLATE LOCATION AND ORIENTATION

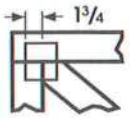

*Center plate on joint unless x,y offsets are indicated. Dimensions are in ft-in-sixteenths. Apply plates to both sides of truss and securely seat.

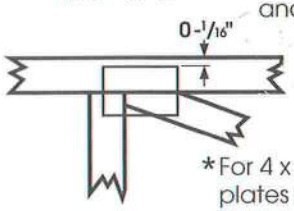

*For 4 x 2 orientation, locate plates 0 - 1/16" from outside edge of truss.

*This symbol indicates the required direction of slots in connector plates.

*** Plate location details available in MiTek 20/20 software or upon request.**

PLATE SIZE

4 x 4 — The first dimension is the width perpendicular to slots. Second dimension is the length parallel to slots.

LATERAL BRACING

Indicated by symbol shown and/or by text in the bracing section of the output. Use T, I or Eliminator bracing if indicated.

BEARING

Indicates location where bearings (supports) occur. Icons vary but reaction section indicates joint number where bearings occur.

Industry Standards:

ANSI/TPI1: National Design Specification for Metal Plate Connected Wood Truss Construction.
DSB-89: Design Standard for Bracing.
BCSI1: Building Component Safety Information, Guide to Good Practice for Handling, Installing & Bracing of Metal Plate Connected Wood Trusses.

Numbering System

6-4-8 — dimensions shown in ft-in-sixteenths

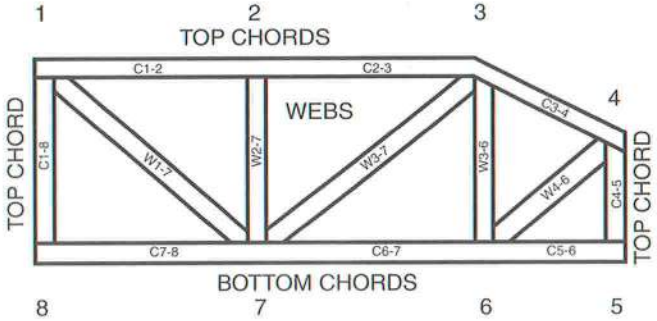

JOINTS ARE GENERALLY NUMBERED/LETTERED CLOCKWISE AROUND THE TRUSS STARTING AT THE JOINT FARTHEST TO THE LEFT.

CHORDS AND WEBS ARE IDENTIFIED BY END JOINT NUMBERS/LETTERS.

CONNECTOR PLATE CODE APPROVALS

BOCA	96-31, 95-43, 96-20-1, 96-67, 84-32
ICBO	4922, 5243, 5363, 3907
SBCCI	9667, 9730, 9604B, 9511, 9432A

MiTek®

TEE-LOK®

⚠General Safety Notes

Failure to Follow Could Cause Property Damage or Personal Injury

1. Additional stability bracing for truss system, e.g. diagonal or X-bracing, is always required. See BCSI1.
2. Never exceed the design loading shown and never stack materials on inadequately braced trusses.
3. Provide copies of this truss design to the building designer, erection supervisor, property owner and all other interested parties.
4. Cut members to bear tightly against each other.
5. Place plates on each face of truss at each joint and embed fully. Knots and wane at joint locations are regulated by ANSI/TPI1.
6. Design assumes trusses will be suitably protected from the environment in accord with ANSI/TPI1.
7. Unless otherwise noted, moisture content of lumber shall not exceed 19% at time of fabrication.
8. Unless expressly noted, this design is not applicable for use with fire retardant or preservative treated lumber.
9. Camber is a non-structural consideration and is the responsibility of truss fabricator. General practice is to camber for dead load deflection.
10. Plate type, size, orientation and location dimensions shown indicate minimum plating requirements.
11. Lumber used shall be of the species and size, and in all respects, equal to or better than that specified.
12. Top chords must be sheathed or purlins provided at spacing shown on design.
13. Bottom chords require lateral bracing at 10 ft. spacing, or less, if no ceiling is installed, unless otherwise noted.
14. Connections not shown are the responsibility of others.
15. Do not cut or alter truss member or plate without prior approval of a professional engineer.
16. Install and load vertically unless indicated otherwise.

© 2004 Mitek®

Job	Truss	Truss Type	Qty	Ply	SIMQUE HOMES	I9388133
8833	H3	ROOF TRUSS	1	1	Job Reference (optional)	

Reese Building Components, INC., Sylvester Ga.

6.200 s Oct 18 2005 MiTek Industries, Inc. Fri Nov 11 13:30:45 2005 Page 1

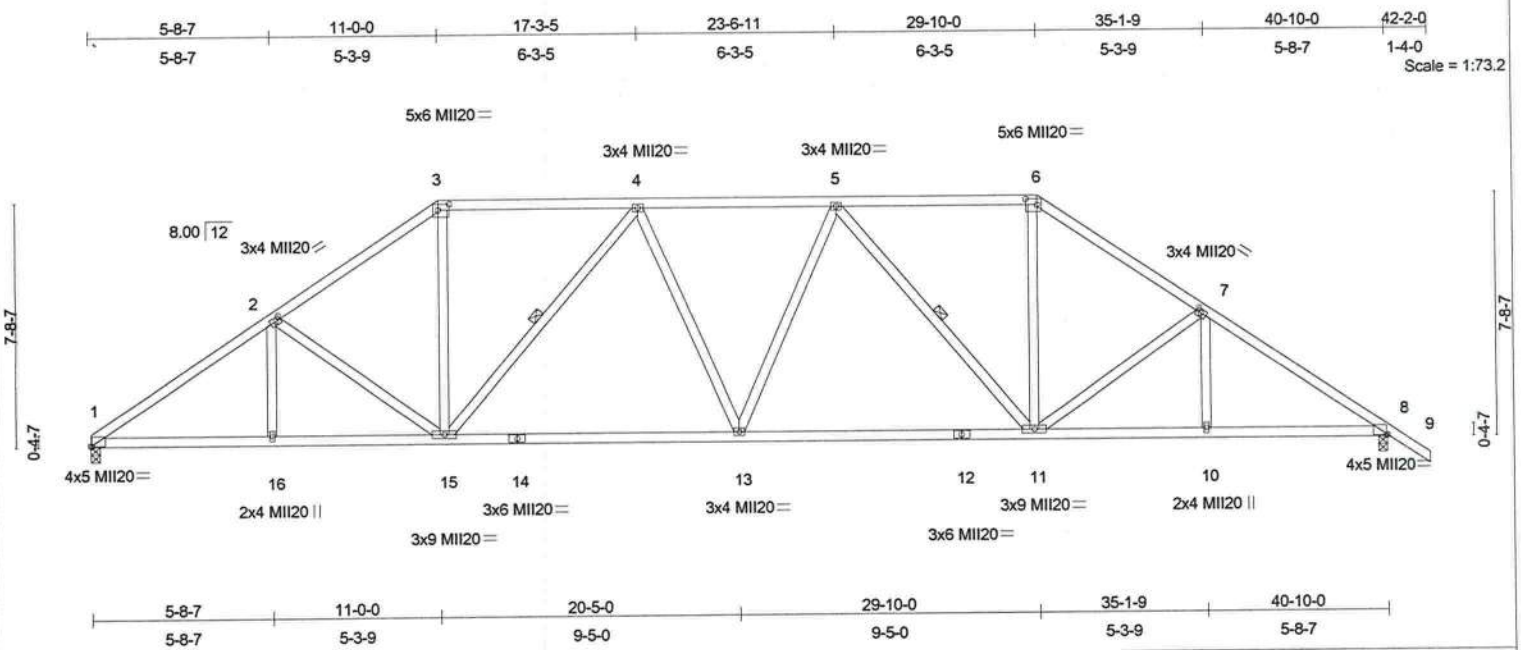

Plate Offsets (X,Y): [1:0-0-7,0-0-2], [2:0-1-12,0-1-8], [3:0-4-4,0-2-4], [6:0-4-4,0-2-4], [7:0-1-12,0-1-8], [8:0-0-7,0-0-2]

LOADING (psf)		SPACING	2-0-0	CSI		DEFL	in	(loc)	l/defl	L/d	PLATES	GRIP
TCLL	20.0	Plates Increase	1.25	TC	0.41	Vert(LL)	0.17	13-15	>999	360	MII20	249/190
TCDL	10.0	Lumber Increase	1.25	BC	0.60	Vert(TL)	-0.35	13-15	>999	240		
BCLL	0.0	Rep Stress Incr	YES	WB	0.47	Horz(TL)	0.12	8	n/a	n/a		
BCDL	10.0	Code	FBC2001/ANSI95	(Matrix)							Weight: 232 lb	

LUMBER
TOP CHORD 2 X 4 SYP No.2
BOT CHORD 2 X 4 SYP No.2
WEBS 2 X 4 SYP No.3

BRACING
TOP CHORD Sheathed or 3-8-5 oc purlins.
BOT CHORD Rigid ceiling directly applied or 6-3-14 oc bracing.
WEBS 1 Row at midpt 4-15, 5-11

REACTIONS (lb/size) 1=1620/0-3-8, 8=1712/0-3-8
Max Horz 1=-335(load case 2)
Max Uplift1=-529(load case 3), 8=-557(load case 2)

This truss design is based upon the building code shown. This code has been specified by the project engineer/architect, or building designer. The applicability of this code in any particular jurisdiction should be confirmed with the building official prior to truss fabrication. This determination is not the responsibility of the component/truss designer.

FORCES (lb) - Maximum Compression/Maximum Tension
TOP CHORD 1-2=-2598/885, 2-3=-2217/877, 3-4=-1788/792, 4-5=-2220/912, 5-6=-1784/790, 6-7=-2212/875, 7-8=-2582/878, 8-9=0/44
BOT CHORD 1-16=-937/2064, 15-16=-937/2064, 14-15=-986/2179, 13-14=-986/2179, 12-13=-913/2178, 11-12=-913/2178, 10-11=-614/2048, 8-10=-614/2048
WEBS 2-16=0/118, 2-15=-362/340, 3-15=-231/833, 4-15=-701/529, 4-13=-38/165, 5-13=-40/168, 5-11=-704/530, 6-11=-229/828, 7-11=-345/315, 7-10=0/108

NOTES
1) Unbalanced roof live loads have been considered for this design.
2) Wind: ASCE 7-98; 110mph (3-second gust); h=15ft; TCDL=5.0psf; BCDL=5.0psf; Category II; Exp C; enclosed; MWFRS gable end zone; cantilever left and right exposed ; end vertical left and right exposed; Lumber DOL=1.33 plate grip DOL=1.33.
3) Provide adequate drainage to prevent water ponding.
4) Provide mechanical connection (by others) of truss to bearing plate capable of withstanding 529 lb uplift at joint 1 and 557 lb uplift at joint 8.

LOAD CASE(S) Standard

Juan Garcia, FL Lic #58521
MiTek Industries, Inc.
14515 North Outer Forty Drive
Suite 300
Chesterfield, MO, 63017
FL Cert.#6634

November 14,2005

WARNING - Verify design parameters and READ NOTES ON THIS AND REVERSE SIDE BEFORE USE.
Design valid for use only with MiTek connectors. This design is based only upon parameters shown, and is for an individual building component. Applicability of design parameters and proper incorporation of component is responsibility of building designer - not truss designer. Bracing shown is for lateral support of individual web members only. Additional temporary bracing to insure stability during construction is the responsibility of the erector. Additional permanent bracing of the overall structure is the responsibility of the building designer. For general guidance regarding fabrication, quality control, storage, delivery, erection and bracing, consult ANSI/TPI1 Quality Criteria, DSB-89 and BCSI1 Building Component Safety Information available from Truss Plate Institute, 583 D'Onofrio Drive, Madison, WI 53719.

14515 N. Outer Forty,
Suite #300
Chesterfield, MO 63017

MiTek®

Symbols

PLATE LOCATION AND ORIENTATION

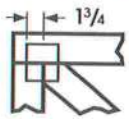

*Center plate on joint unless x,y offsets are indicated. Dimensions are in ft-in-sixteenths. Apply plates to both sides of truss and securely seat.

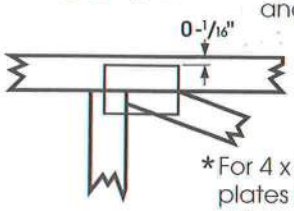

*For 4 x 2 orientation, locate plates 0 - 1/16" from outside edge of truss.

*This symbol indicates the required direction of slots in connector plates.

*** Plate location details available in MiTek 20/20 software or upon request.**

PLATE SIZE

4 x 4 — The first dimension is the width perpendicular to slots. Second dimension is the length parallel to slots.

LATERAL BRACING

Indicated by symbol shown and/or by text in the bracing section of the output. Use T, I or Eliminator bracing if indicated.

BEARING

Indicates location where bearings (supports) occur. Icons vary but reaction section indicates joint number where bearings occur.

Industry Standards:

ANSI/TPI1: National Design Specification for Metal Plate Connected Wood Truss Construction.
DSB-89: Design Standard for Bracing.
BCSI1: Building Component Safety Information, Guide to Good Practice for Handling, Installing & Bracing of Metal Plate Connected Wood Trusses.

Numbering System

6-4-8 dimensions shown in ft-in-sixteenths

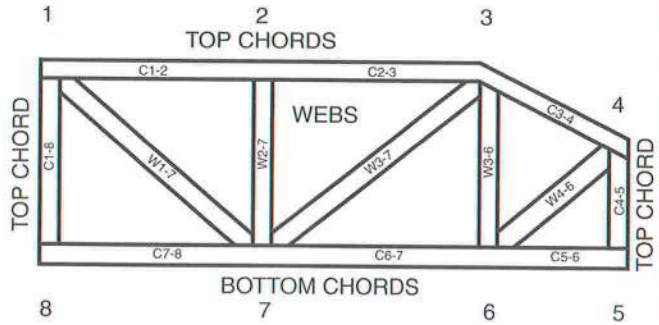

JOINTS ARE GENERALLY NUMBERED/LETTERED CLOCKWISE AROUND THE TRUSS STARTING AT THE JOINT FARTHEST TO THE LEFT.

CHORDS AND WEBS ARE IDENTIFIED BY END JOINT NUMBERS/LETTERS.

CONNECTOR PLATE CODE APPROVALS

BOCA	96-31, 95-43, 96-20-1, 96-67, 84-32
ICBO	4922, 5243, 5363, 3907
SBCCI	9667, 9730, 9604B, 9511, 9432A

MiTek®

TEE-LOK®

⚠General Safety Notes

Failure to Follow Could Cause Property Damage or Personal Injury

1. Additional stability bracing for truss system, e.g. diagonal or X-bracing, is always required. See BCSI1.
2. Never exceed the design loading shown and never stack materials on inadequately braced trusses.
3. Provide copies of this truss design to the building designer, erection supervisor, property owner and all other interested parties.
4. Cut members to bear tightly against each other.
5. Place plates on each face of truss at each joint and embed fully. Knots and wane at joint locations are regulated by ANSI/TPI1.
6. Design assumes trusses will be suitably protected from the environment in accord with ANSI/TPI1.
7. Unless otherwise noted, moisture content of lumber shall not exceed 19% at time of fabrication.
8. Unless expressly noted, this design is not applicable for use with fire retardant or preservative treated lumber.
9. Camber is a non-structural consideration and is the responsibility of truss fabricator. General practice is to camber for dead load deflection.
10. Plate type, size, orientation and location dimensions shown indicate minimum plating requirements.
11. Lumber used shall be of the species and size, and in all respects, equal to or better than that specified.
12. Top chords must be sheathed or purlins provided at spacing shown on design.
13. Bottom chords require lateral bracing at 10 ft. spacing, or less, if no ceiling is installed, unless otherwise noted.
14. Connections not shown are the responsibility of others.
15. Do not cut or alter truss member or plate without prior approval of a professional engineer.
16. Install and load vertically unless indicated otherwise.

© 2004 Mitek®

Job	Truss	Truss Type	Qty	Ply	SIMQUE HOMES
8833	H4	ROOF TRUSS	1	1	I9388134 Job Reference (optional)

Reese Building Components, INC., Sylvester Ga. 6.200 s Oct 18 2005 MiTek Industries, Inc. Fri Nov 11 13:30:46 2005 Page 1

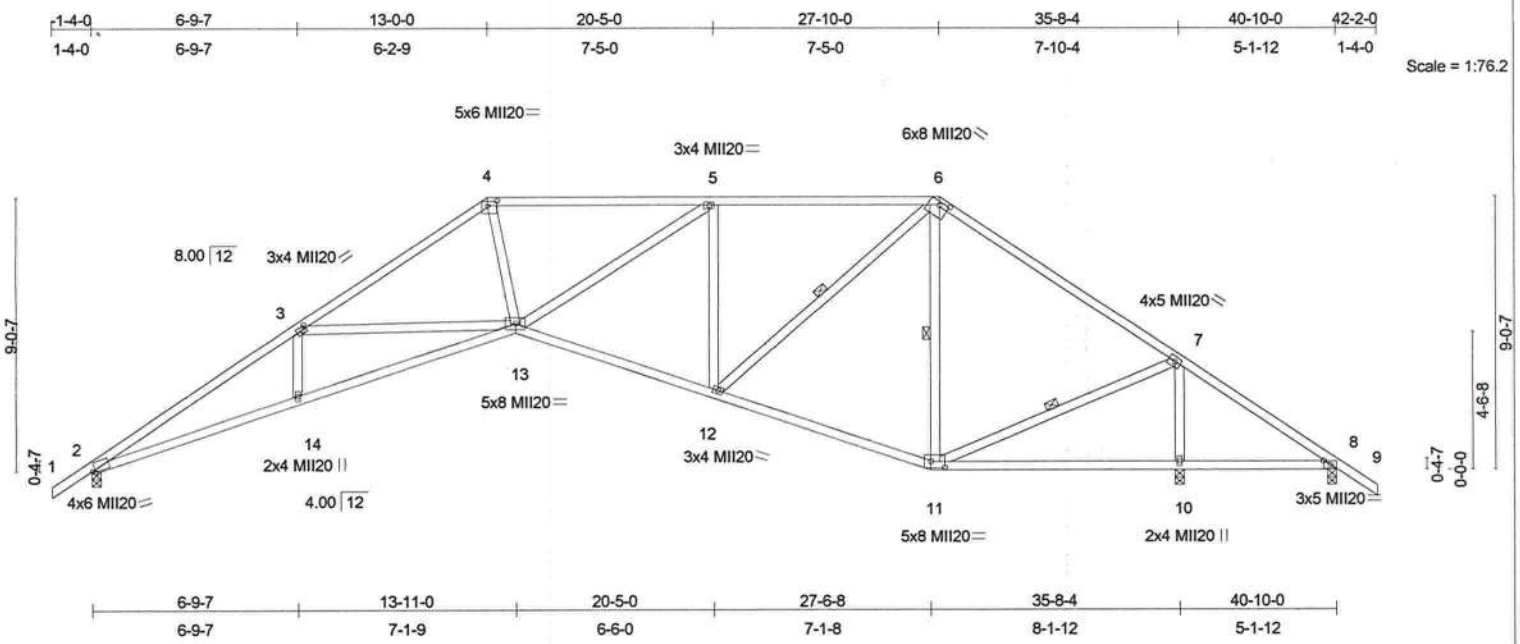

Plate Offsets (X,Y): [2:0-1-2,Edge], [3:0-1-12,0-1-8], [4:0-3-12,0-2-0], [6:0-4-0,0-1-9], [8:0-2-9,0-1-8], [11:0-5-8,0-2-8]

LOADING (psf)		SPACING	2-0-0	CSI		DEFL	in	(loc)	l/defl	L/d	PLATES	GRIP
TCLL	20.0	Plates Increase	1.25	TC	0.75	Vert(LL)	0.30	13-14	>999	360	MII20	249/190
TCDL	10.0	Lumber Increase	1.25	BC	0.78	Vert(TL)	-0.46	13-14	>919	240		
BCLL	0.0	Rep Stress Incr	YES	WB	0.74	Horz(TL)	0.30	10	n/a	n/a		
BCDL	10.0	Code FBC2001/ANSI95		(Matrix)							Weight: 220 lb	

LUMBER
TOP CHORD 2 X 4 SYP No.2
BOT CHORD 2 X 4 SYP No.2
WEBS 2 X 4 SYP No.3

BRACING
TOP CHORD Sheathed or 2-9-13 oc purlins.
BOT CHORD Rigid ceiling directly applied or 5-1-0 oc bracing.
WEBS 1 Row at midpt 6-12, 7-11, 6-11

This truss design is based upon the building code shown. This code has been specified by the project engineer/architect, or building designer. The applicability of this code in any particular jurisdiction should be confirmed with the building official prior to truss fabrication. This determination is not the responsibility of the component/truss designer.

REACTIONS (lb/size) 2=1394/0-3-8, 8=-538/0-3-8, 10=2564/0-3-8
Max Horz 2=-374(load case 2)
Max Uplift2=-508(load case 4), 8=-671(load case 6), 10=-608(load case 3)
Max Grav 2=1394(load case 1), 8=369(load case 3), 10=2564(load case 1)

FORCES (lb) - Maximum Compression/Maximum Tension
TOP CHORD 1-2=0/42, 2-3=-3697/1369, 3-4=-2814/1206, 4-5=-2496/1153, 5-6=-1618/744, 6-7=-957/478, 7-8=-623/1442, 8-9=0/44
BOT CHORD 2-14=-1462/3132, 13-14=-1460/3128, 12-13=-818/1726, 11-12=-233/719, 10-11=-1100/524, 8-10=-1100/524
WEBS 3-14=0/155, 3-13=-697/597, 4-13=-390/1118, 5-13=-486/1045, 5-12=-1026/727, 6-12=-734/1283, 7-11=-815/1939, 7-10=-2405/678, 6-11=-830/472

NOTES
1) Unbalanced roof live loads have been considered for this design.
2) Wind: ASCE 7-98; 110mph (3-second gust); h=15ft; TCDL=5.0psf; BCDL=5.0psf; Category II; Exp C; enclosed; MWFRS gable end zone; cantilever left and right exposed ; end vertical left and right exposed; Lumber DOL=1.33 plate grip DOL=1.33.
3) Provide adequate drainage to prevent water ponding.
4) Bearing at joint(s) 2 considers parallel to grain value using ANSI/TPI 1 angle to grain formula. Building designer should verify capacity of bearing surface.
5) Provide mechanical connection (by others) of truss to bearing plate capable of withstanding 508 lb uplift at joint 2, 671 lb uplift at joint 8 and 608 lb uplift at joint 10.

LOAD CASE(S) Standard

Juan Garcia, FL Lic #58521
MiTek Industries, Inc.
14515 North Outer Forty Drive
Suite 300
Chesterfield, MO, 63017
FL Cert.#6634

November 14,2005

WARNING - Verify design parameters and READ NOTES ON THIS AND REVERSE SIDE BEFORE USE.
Design valid for use only with MiTek connectors. This design is based only upon parameters shown, and is for an individual building component. Applicability of design parameters and proper incorporation of component is responsibility of building designer - not truss designer. Bracing shown is for lateral support of individual web members only. Additional temporary bracing to insure stability during construction is the responsibility of the erector. Additional permanent bracing of the overall structure is the responsibility of the building designer. For general guidance regarding fabrication, quality control, storage, delivery, erection and bracing, consult ANSI/TPI1 Quality Criteria, DSB-89 and BCSI1 Building Component Safety Information available from Truss Plate Institute, 583 D'Onofrio Drive, Madison, WI 53719.

14515 N. Outer Forty,
Suite #300
Chesterfield, MO 63017

MiTek®

Symbols

PLATE LOCATION AND ORIENTATION

*Center plate on joint unless x,y offsets are indicated. Dimensions are in ft-in-sixteenths. Apply plates to both sides of truss and securely seat.

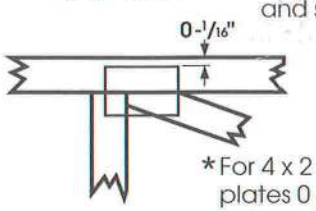

*For 4 x 2 orientation, locate plates 0 - 1/16" from outside edge of truss.

*This symbol indicates the required direction of slots in connector plates.

*** Plate location details available in MiTek 20/20 software or upon request.**

PLATE SIZE

4 x 4 — The first dimension is the width perpendicular to slots. Second dimension is the length parallel to slots.

LATERAL BRACING

Indicated by symbol shown and/or by text in the bracing section of the output. Use T, I or Eliminator bracing if indicated.

BEARING

Indicates location where bearings (supports) occur. Icons vary but reaction section indicates joint number where bearings occur.

Industry Standards:

ANSI/TPI1: National Design Specification for Metal Plate Connected Wood Truss Construction.
DSB-89: Design Standard for Bracing.
BCSI1: Building Component Safety Information, Guide to Good Practice for Handling, Installing & Bracing of Metal Plate Connected Wood Trusses.

Numbering System

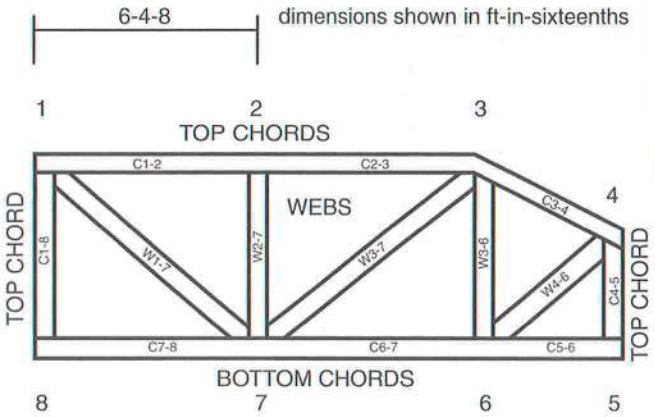

JOINTS ARE GENERALLY NUMBERED/LETTERED CLOCKWISE AROUND THE TRUSS STARTING AT THE JOINT FARTHEST TO THE LEFT.

CHORDS AND WEBS ARE IDENTIFIED BY END JOINT NUMBERS/LETTERS.

CONNECTOR PLATE CODE APPROVALS

BOCA	96-31, 95-43, 96-20-1, 96-67, 84-32
ICBO	4922, 5243, 5363, 3907
SBCCI	9667, 9730, 9604B, 9511, 9432A

MiTek®

TEE-LOK®

⚠General Safety Notes

Failure to Follow Could Cause Property Damage or Personal Injury

1. Additional stability bracing for truss system, e.g. diagonal or X-bracing, is always required. See BCSI1.
2. Never exceed the design loading shown and never stack materials on inadequately braced trusses.
3. Provide copies of this truss design to the building designer, erection supervisor, property owner and all other interested parties.
4. Cut members to bear tightly against each other.
5. Place plates on each face of truss at each joint and embed fully. Knots and wane at joint locations are regulated by ANSI/TPI1.
6. Design assumes trusses will be suitably protected from the environment in accord with ANSI/TPI1.
7. Unless otherwise noted, moisture content of lumber shall not exceed 19% at time of fabrication.
8. Unless expressly noted, this design is not applicable for use with fire retardant or preservative treated lumber.
9. Camber is a non-structural consideration and is the responsibility of truss fabricator. General practice is to camber for dead load deflection.
10. Plate type, size, orientation and location dimensions shown indicate minimum plating requirements.
11. Lumber used shall be of the species and size, and in all respects, equal to or better than that specified.
12. Top chords must be sheathed or purlins provided at spacing shown on design.
13. Bottom chords require lateral bracing at 10 ft. spacing, or less, if no ceiling is installed, unless otherwise noted.
14. Connections not shown are the responsibility of others.
15. Do not cut or alter truss member or plate without prior approval of a professional engineer.
16. Install and load vertically unless indicated otherwise.

© 2004 Mitek®

Job	Truss	Truss Type	Qty	Ply	SIMQUE HOMES
8833	H5	ROOF TRUSS	8	1	I9388135 Job Reference (optional)

Reese Building Components, INC., Sylvester Ga. 6.200 s Oct 18 2005 MiTek Industries, Inc. Fri Nov 11 13:30:46 2005 Page 1

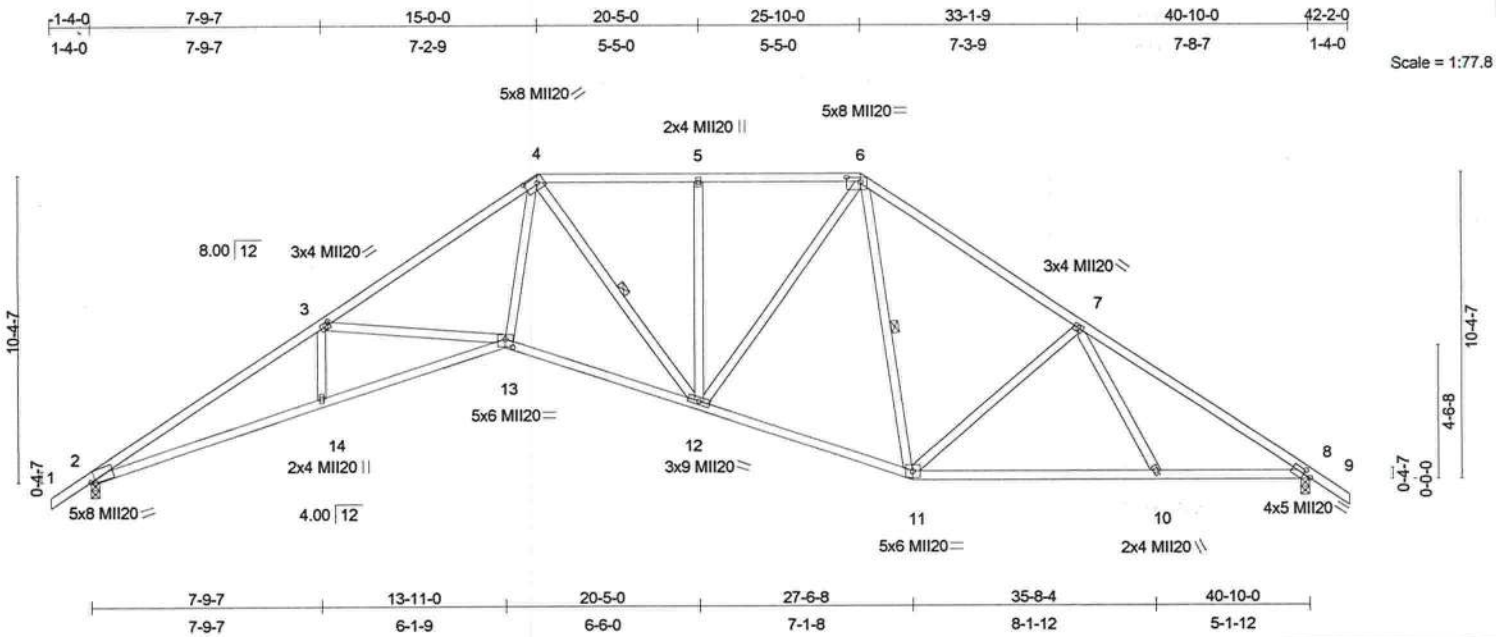

Plate Offsets (X,Y): [2:0-1-13,Edge], [3:0-1-12,0-1-8], [4:0-5-4,0-2-4], [6:0-5-8,0-1-12], [8:0-2-15,0-1-12], [13:0-3-0,0-3-4]

LOADING (psf)		SPACING 2-0-0		CSI		DEFL	in	(loc)	l/defl	L/d	PLATES	GRIP
TCLL	20.0	Plates Increase	1.25	TC	0.94	Vert(LL)	0.32	13	>999	360	MII20	249/190
TCDL	10.0	Lumber Increase	1.25	BC	0.93	Vert(TL)	-0.57	12-13	>856	240		
BCLL	0.0	Rep Stress Incr	YES	WB	0.83	Horz(TL)	0.42	8	n/a	n/a		
BCDL	10.0	Code FBC2001/ANSI95		(Matrix)							Weight: 231 lb	

LUMBER
TOP CHORD 2 X 4 SYP No.1D *Except*
4-6 2 X 4 SYP No.2
BOT CHORD 2 X 4 SYP No.2 *Except*
2-13 2 X 4 SYP No.2D
WEBS 2 X 4 SYP No.3

BRACING
TOP CHORD Sheathed.
BOT CHORD Rigid ceiling directly applied or 5-1-10 oc bracing.
WEBS 1 Row at midpt 4-12, 6-11

REACTIONS (lb/size) 2=1710/0-3-8, 8=1710/0-3-8
Max Horz 2=-430(load case 2)
Max Uplift2=-603(load case 4), 8=-603(load case 5)

This truss design is based upon the building code shown. This code has been specified by the project engineer/architect, or building designer. The applicability of this code in any particular jurisdiction should be confirmed with the building official prior to truss fabrication. This determination is not the responsibility of the component/truss designer.

FORCES (lb) - Maximum Compression/Maximum Tension
TOP CHORD 1-2=0/42, 2-3=-4714/1447, 3-4=-3818/1167, 4-5=-2151/659, 5-6=-2151/659, 6-7=-2068/684, 7-8=-2603/710, 8-9=0/44
BOT CHORD 2-14=-1501/4014, 13-14=-1495/4001, 12-13=-982/2770, 11-12=-400/1731, 10-11=-384/1959, 8-10=-366/2047
WEBS 3-14=0/163, 3-13=-730/634, 4-13=-765/2367, 4-12=-813/434, 5-12=-316/328, 6-12=-529/956, 6-11=-227/330, 7-11=-478/459, 7-10=0/197

NOTES
1) Unbalanced roof live loads have been considered for this design.
2) Wind: ASCE 7-98; 110mph (3-second gust); h=15ft; TCDL=5.0psf; BCDL=5.0psf; Category II; Exp C; enclosed; MWFRS gable end zone; cantilever left and right exposed ; end vertical left and right exposed; Lumber DOL=1.33 plate grip DOL=1.33.
3) Provide adequate drainage to prevent water ponding.
4) Bearing at joint(s) 2 considers parallel to grain value using ANSI/TPI 1 angle to grain formula. Building designer should verify capacity of bearing surface.
5) Provide mechanical connection (by others) of truss to bearing plate capable of withstanding 603 lb uplift at joint 2 and 603 lb uplift at joint 8.

LOAD CASE(S) Standard

Juan Garcia, FL Lic #58521
MiTek Industries, Inc.
14515 North Outer Forty Drive
Suite 300
Chesterfield, MO, 63017
FL Cert.#6634

November 14,2005

WARNING - Verify design parameters and READ NOTES ON THIS AND REVERSE SIDE BEFORE USE.
Design valid for use only with MiTek connectors. This design is based only upon parameters shown, and is for an individual building component. Applicability of design parameters and proper incorporation of component is responsibility of building designer - not truss designer. Bracing shown is for lateral support of individual web members only. Additional temporary bracing to insure stability during construction is the responsibility of the erector. Additional permanent bracing of the overall structure is the responsibility of the building designer. For general guidance regarding fabrication, quality control, storage, delivery, erection and bracing, consult ANSI/TPI1 Quality Criteria, DSB-89 and BCSI1 Building Component Safety Information available from Truss Plate Institute, 583 D'Onofrio Drive, Madison, WI 53719.

14515 N. Outer Forty,
Suite #300
Chesterfield, MO 63017

MiTek®

Symbols

PLATE LOCATION AND ORIENTATION

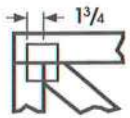

*Center plate on joint unless x,y offsets are indicated. Dimensions are in ft-in-sixteenths. Apply plates to both sides of truss and securely seat.

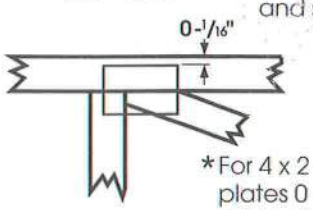

*For 4 x 2 orientation, locate plates 0 - 1/16" from outside edge of truss.

*This symbol indicates the required direction of slots in connector plates.

*** Plate location details available in MiTek 20/20 software or upon request.**

PLATE SIZE

4 x 4 — The first dimension is the width perpendicular to slots. Second dimension is the length parallel to slots.

LATERAL BRACING

Indicated by symbol shown and/or by text in the bracing section of the output. Use T, I or Eliminator bracing if indicated.

BEARING

Indicates location where bearings (supports) occur. Icons vary but reaction section indicates joint number where bearings occur.

Industry Standards:

ANSI/TPI1: National Design Specification for Metal Plate Connected Wood Truss Construction.
DSB-89: Design Standard for Bracing.
BCSI1: Building Component Safety Information, Guide to Good Practice for Handling, Installing & Bracing of Metal Plate Connected Wood Trusses.

Numbering System

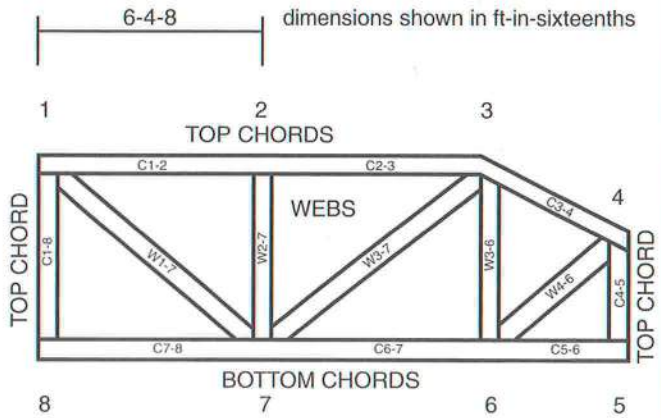

JOINTS ARE GENERALLY NUMBERED/LETTERED CLOCKWISE AROUND THE TRUSS STARTING AT THE JOINT FARTHEST TO THE LEFT.

CHORDS AND WEBS ARE IDENTIFIED BY END JOINT NUMBERS/LETTERS.

CONNECTOR PLATE CODE APPROVALS

BOCA	96-31, 95-43, 96-20-1, 96-67, 84-32
ICBO	4922, 5243, 5363, 3907
SBCCI	9667, 9730, 9604B, 9511, 9432A

MiTek®

TEE-LOK®

⚠General Safety Notes

Failure to Follow Could Cause Property Damage or Personal Injury

1. Additional stability bracing for truss system, e.g. diagonal or X-bracing, is always required. See BCSI1.
2. Never exceed the design loading shown and never stack materials on inadequately braced trusses.
3. Provide copies of this truss design to the building designer, erection supervisor, property owner and all other interested parties.
4. Cut members to bear tightly against each other.
5. Place plates on each face of truss at each joint and embed fully. Knots and wane at joint locations are regulated by ANSI/TPI1.
6. Design assumes trusses will be suitably protected from the environment in accord with ANSI/TPI1.
7. Unless otherwise noted, moisture content of lumber shall not exceed 19% at time of fabrication.
8. Unless expressly noted, this design is not applicable for use with fire retardant or preservative treated lumber.
9. Camber is a non-structural consideration and is the responsibility of truss fabricator. General practice is to camber for dead load deflection.
10. Plate type, size, orientation and location dimensions shown indicate minimum plating requirements.
11. Lumber used shall be of the species and size, and in all respects, equal to or better than that specified.
12. Top chords must be sheathed or purlins provided at spacing shown on design.
13. Bottom chords require lateral bracing at 10 ft. spacing, or less, if no ceiling is installed, unless otherwise noted.
14. Connections not shown are the responsibility of others.
15. Do not cut or alter truss member or plate without prior approval of a professional engineer.
16. Install and load vertically unless indicated otherwise.

© 2004 Mitek®

Job	Truss	Truss Type	Qty	Ply	SIMQUE HOMES
8833	H8	ROOF TRUSS	1	2	I9388136 Job Reference (optional)

Reese Building Components, INC., Sylvester Ga.

6.200 s Oct 18 2005 MiTek Industries, Inc. Fri Nov 11 13:30:47 2005 Page 1

-1-4-0	7-0-0	12-11-15	18-10-1	24-10-0
1-4-0	7-0-0	5-11-15	5-10-3	5-11-15

Scale = 1:45.4

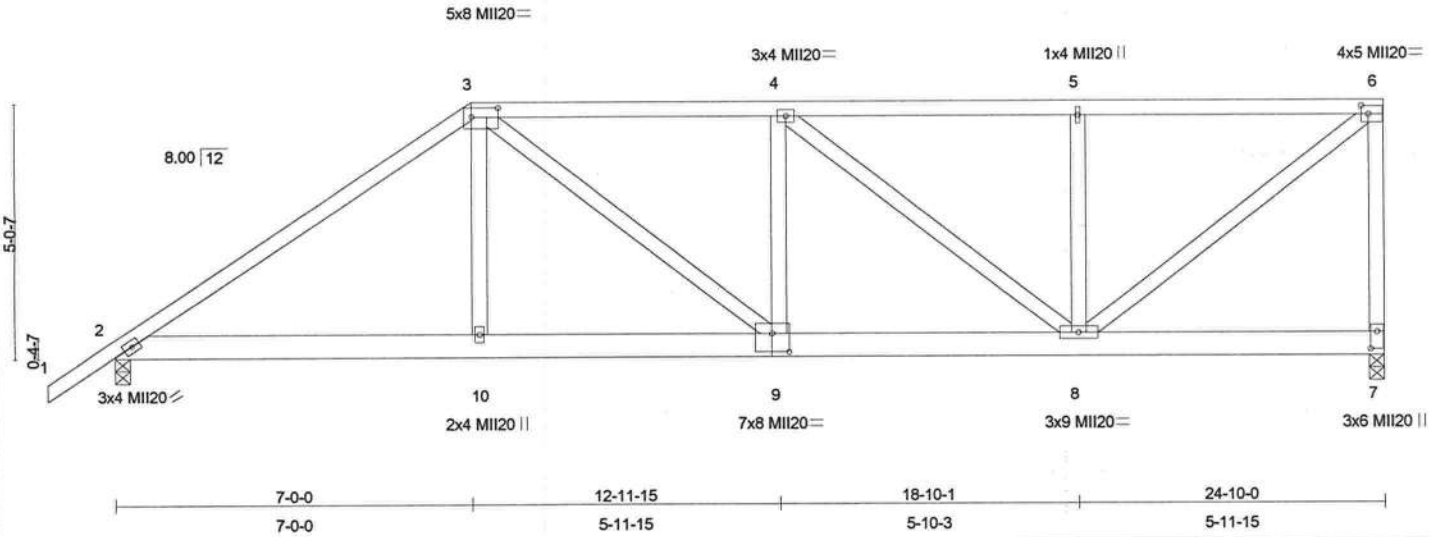

7-0-0	12-11-15	18-10-1	24-10-0
7-0-0	5-11-15	5-10-3	5-11-15

Plate Offsets (X,Y): [3:0-6-4,0-2-4], [6:0-1-12,0-2-0], [7:0-4-4,0-1-8], [9:0-4-0,0-4-8]

LOADING (psf)		SPACING	2-0-0	CSI		DEFL	in	(loc)	l/defl	L/d	PLATES	GRIP
TCLL	20.0	Plates Increase	1.25	TC	0.77	Vert(LL)	0.09	9	>999	360	MII20	249/190
TCDL	10.0	Lumber Increase	1.25	BC	0.25	Vert(TL)	-0.09	9	>999	240		
BCLL	0.0	Rep Stress Incr	NO	WB	0.43	Horz(TL)	-0.02	7	n/a	n/a		
BCDL	10.0	Code FBC2001/ANSI95		(Matrix)							Weight: 313 lb	

LUMBER
TOP CHORD 2 X 4 SYP No.2
BOT CHORD 2 X 6 SYP No.2
WEBS 2 X 4 SYP No.3

BRACING
TOP CHORD Sheathed or 6-0-0 oc purlins, except end verticals.
BOT CHORD Rigid ceiling directly applied or 10-0-0 oc bracing.

This truss design is based upon the building code shown. This code has been specified by the project engineer/architect, or building designer. The applicability of this code in any particular jurisdiction should be confirmed with the building official prior to truss fabrication. This determination is not the responsibility of the component/truss designer.

REACTIONS (lb/size) 7=2190/0-3-8, 2=2038/0-3-8
Max Horz 2=278(load case 3)
Max Uplift7=-1612(load case 2), 2=-1287(load case 4)

FORCES (lb) - Maximum Compression/Maximum Tension
TOP CHORD 1-2=0/47, 2-3=-3170/2078, 3-4=-3039/2253, 4-5=-2199/1673, 5-6=-2199/1673, 6-7=-2044/1639
BOT CHORD 2-10=-1901/2539, 9-10=-1913/2562, 8-9=-2267/3038, 7-8=-135/85
WEBS 3-10=-393/736, 3-9=-692/602, 4-9=-108/524, 4-8=-1073/811, 5-8=-788/923, 6-8=-1938/2704

NOTES
1) 2-ply truss to be connected together with 10d Common(.148"x3") Nails as follows:
   Top chords connected as follows: 2 X 4 - 1 row at 0-9-0 oc.
   Bottom chords connected as follows: 2 X 6 - 2 rows at 0-9-0 oc.
   Webs connected as follows: 2 X 4 - 1 row at 0-9-0 oc.
2) All loads are considered equally applied to all plies, except if noted as front (F) or back (B) face in the LOAD CASE(S) section. Ply to ply connections have been provided to distribute only loads noted as (F) or (B), unless otherwise indicated.
3) Wind: ASCE 7-98; 110mph (3-second gust); h=15ft; TCDL=5.0psf; BCDL=5.0psf; Category II; Exp C; enclosed; MWFRS gable end zone; cantilever left and right exposed ; end vertical left and right exposed; Lumber DOL=1.33 plate grip DOL=1.33.
4) Provide adequate drainage to prevent water ponding.
5) Provide mechanical connection (by others) of truss to bearing plate capable of withstanding 1612 lb uplift at joint 7 and 1287 lb uplift at joint 2.
6) Girder carries hip end with 0-0-0 right side setback, 7-0-0 left side setback, and 7-0-0 end setback.
7) Hanger(s) or other connection device(s) shall be provided sufficient to support concentrated load(s) 513 lb down and 481 lb up at 7-0-0 on bottom chord. The design/selection of such connection device(s) is the responsibility of others.

LOAD CASE(S) Standard
1) Regular: Lumber Increase=1.25, Plate Increase=1.25
   Uniform Loads (plf)
      Vert: 1-3=-60, 3-6=-131(F=-71), 2-10=-20, 7-10=-44(F=-24)
   Concentrated Loads (lb)
      Vert: 10=-513(F)

Juan Garcia, FL Lic #58521
MiTek Industries, Inc.
14515 North Outer Forty Drive
Suite 300
Chesterfield, MO, 63017
FL Cert.#6634

November 14,2005

WARNING - Verify design parameters and READ NOTES ON THIS AND REVERSE SIDE BEFORE USE.
Design valid for use only with MiTek connectors. This design is based only upon parameters shown, and is for an individual building component. Applicability of design parameters and proper incorporation of component is responsibility of building designer - not truss designer. Bracing shown is for lateral support of individual web members only. Additional temporary bracing to insure stability during construction is the responsibility of the erector. Additional permanent bracing of the overall structure is the responsibility of the building designer. For general guidance regarding fabrication, quality control, storage, delivery, erection and bracing, consult ANSI/TPI1 Quality Criteria, DSB-89 and BCSI1 Building Component Safety Information available from Truss Plate Institute, 583 D'Onofrio Drive, Madison, WI 53719.

14515 N. Outer Forty,
Suite #300
Chesterfield, MO 63017

MiTek®

Symbols

PLATE LOCATION AND ORIENTATION

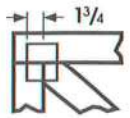

*Center plate on joint unless x,y offsets are indicated. Dimensions are in ft-in-sixteenths. Apply plates to both sides of truss and securely seat.

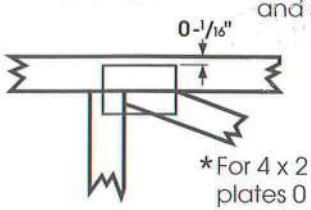

*For 4 x 2 orientation, locate plates 0 - 1/16" from outside edge of truss.

*This symbol indicates the required direction of slots in connector plates.

*** Plate location details available in MiTek 20/20 software or upon request.**

PLATE SIZE

4 x 4 — The first dimension is the width perpendicular to slots. Second dimension is the length parallel to slots.

LATERAL BRACING

Indicated by symbol shown and/or by text in the bracing section of the output. Use T, I or Eliminator bracing if indicated.

BEARING

Indicates location where bearings (supports) occur. Icons vary but reaction section indicates joint number where bearings occur.

Industry Standards:

ANSI/TPI1: National Design Specification for Metal Plate Connected Wood Truss Construction.
DSB-89: Design Standard for Bracing.
BCSI1: Building Component Safety Information, Guide to Good Practice for Handling, Installing & Bracing of Metal Plate Connected Wood Trusses.

Numbering System

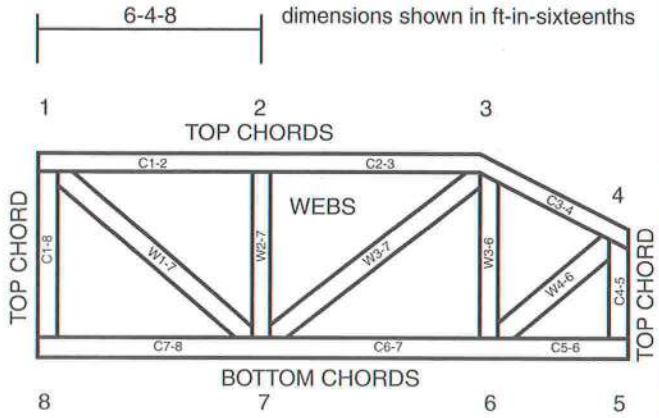

JOINTS ARE GENERALLY NUMBERED/LETTERED CLOCKWISE AROUND THE TRUSS STARTING AT THE JOINT FARTHEST TO THE LEFT.

CHORDS AND WEBS ARE IDENTIFIED BY END JOINT NUMBERS/LETTERS.

CONNECTOR PLATE CODE APPROVALS

BOCA	96-31, 95-43, 96-20-1, 96-67, 84-32
ICBO	4922, 5243, 5363, 3907
SBCCI	9667, 9730, 9604B, 9511, 9432A

MiTek®

TEE-LOK®

⚠General Safety Notes

Failure to Follow Could Cause Property Damage or Personal Injury

1. Additional stability bracing for truss system, e.g. diagonal or X-bracing, is always required. See BCSI1.
2. Never exceed the design loading shown and never stack materials on inadequately braced trusses.
3. Provide copies of this truss design to the building designer, erection supervisor, property owner and all other interested parties.
4. Cut members to bear tightly against each other.
5. Place plates on each face of truss at each joint and embed fully. Knots and wane at joint locations are regulated by ANSI/TPI1.
6. Design assumes trusses will be suitably protected from the environment in accord with ANSI/TPI1.
7. Unless otherwise noted, moisture content of lumber shall not exceed 19% at time of fabrication.
8. Unless expressly noted, this design is not applicable for use with fire retardant or preservative treated lumber.
9. Camber is a non-structural consideration and is the responsibility of truss fabricator. General practice is to camber for dead load deflection.
10. Plate type, size, orientation and location dimensions shown indicate minimum plating requirements.
11. Lumber used shall be of the species and size, and in all respects, equal to or better than that specified.
12. Top chords must be sheathed or purlins provided at spacing shown on design.
13. Bottom chords require lateral bracing at 10 ft. spacing, or less, if no ceiling is installed, unless otherwise noted.
14. Connections not shown are the responsibility of others.
15. Do not cut or alter truss member or plate without prior approval of a professional engineer.
16. Install and load vertically unless indicated otherwise.

© 2004 Mitek®

Job	Truss	Truss Type	Qty	Ply	SIMQUE HOMES
8833	H9	ROOF TRUSS	1	1	I9388137 Job Reference (optional)

Reese Building Components, INC., Sylvester Ga. 6.200 s Oct 18 2005 MiTek Industries, Inc. Fri Nov 11 13:30:47 2005 Page 1

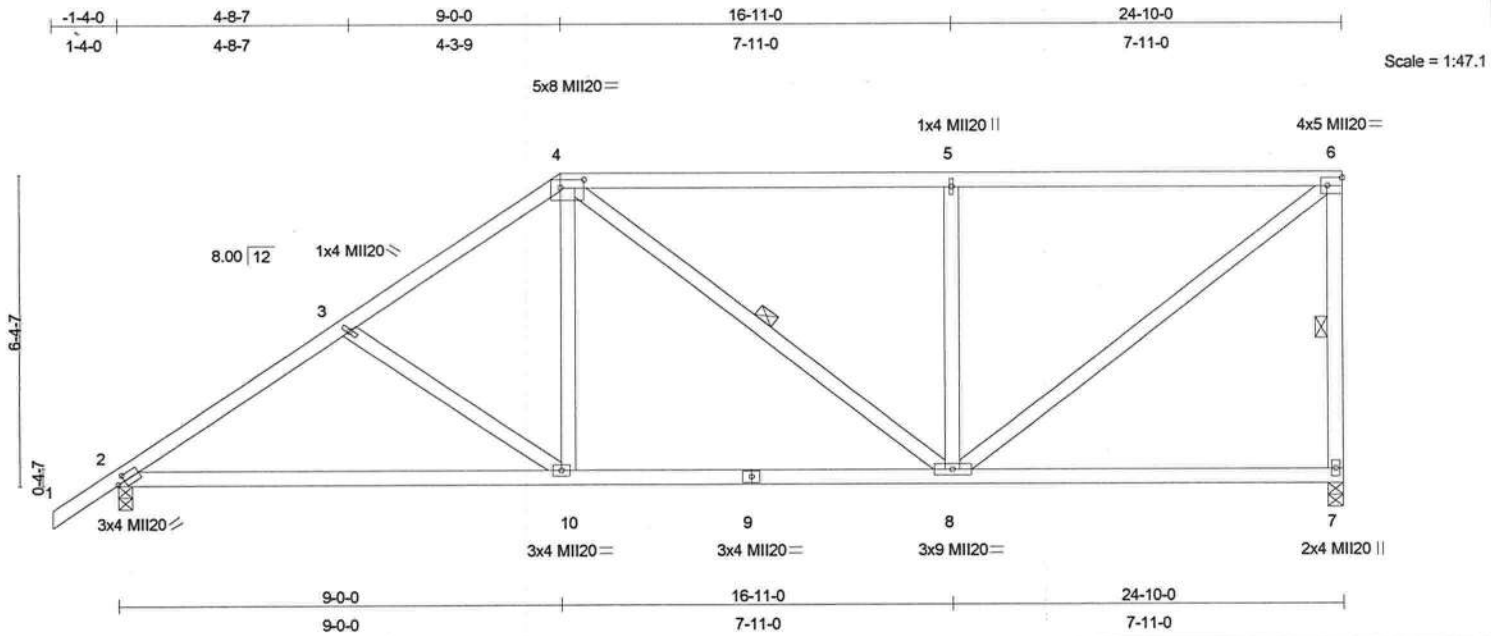

Plate Offsets (X,Y): [2:0-1-15,0-1-8], [4:0-5-12,0-2-0], [6:Edge,0-2-0]

LOADING (psf)		SPACING	2-0-0	CSI		DEFL	in	(loc)	l/defl	L/d	PLATES	GRIP
TCLL	20.0	Plates Increase	1.25	TC	0.74	Vert(LL)	0.06	8-10	>999	360	MII20	249/190
TCDL	10.0	Lumber Increase	1.25	BC	0.38	Vert(TL)	-0.18	2-10	>999	240		
BCLL	0.0	Rep Stress Incr	YES	WB	0.87	Horz(TL)	0.03	7	n/a	n/a		
BCDL	10.0	Code FBC2001/ANSI95		(Matrix)							Weight: 141 lb	

LUMBER
TOP CHORD 2 X 4 SYP No.2
BOT CHORD 2 X 4 SYP No.2
WEBS 2 X 4 SYP No.3

BRACING
TOP CHORD Sheathed or 5-0-4 oc purlins, except end verticals.
BOT CHORD Rigid ceiling directly applied or 8-2-15 oc bracing.
WEBS 1 Row at midpt 6-7, 4-8

REACTIONS (lb/size) 7=979/0-3-8, 2=1073/0-3-8
Max Horz 2=352(load case 3)
Max Uplift7=-442(load case 3), 2=-405(load case 4)

This truss design is based upon the building code shown. This code has been specified by the project engineer/architect, or building designer. The applicability of this code in any particular jurisdiction should be confirmed with the building official prior to truss fabrication. This determination is not the responsibility of the component/truss designer.

FORCES (lb) - Maximum Compression/Maximum Tension
TOP CHORD 1-2=0/44, 2-3=-1423/427, 3-4=-1215/374, 4-5=-927/459, 5-6=-926/460, 6-7=-899/465
BOT CHORD 2-10=-579/1124, 9-10=-500/969, 8-9=-500/969, 7-8=-89/83
WEBS 3-10=-196/261, 4-10=-58/292, 4-8=-233/96, 5-8=-510/475, 6-8=-511/1118

NOTES
1) Wind: ASCE 7-98; 110mph (3-second gust); h=15ft; TCDL=5.0psf; BCDL=5.0psf; Category II; Exp C; enclosed; MWFRS gable end zone; cantilever left and right exposed ; end vertical left and right exposed; Lumber DOL=1.33 plate grip DOL=1.33.
2) Provide adequate drainage to prevent water ponding.
3) Provide mechanical connection (by others) of truss to bearing plate capable of withstanding 442 lb uplift at joint 7 and 405 lb uplift at joint 2.

LOAD CASE(S) Standard

Juan Garcia, FL Lic #58521
MiTek Industries, Inc.
14515 North Outer Forty Drive
Suite 300
Chesterfield, MO, 63017
FL Cert.#6634

November 14,2005

WARNING - Verify design parameters and READ NOTES ON THIS AND REVERSE SIDE BEFORE USE.
Design valid for use only with MiTek connectors. This design is based only upon parameters shown, and is for an individual building component. Applicability of design parameters and proper incorporation of component is responsibility of building designer - not truss designer. Bracing shown is for lateral support of individual web members only. Additional temporary bracing to insure stability during construction is the responsibility of the erector. Additional permanent bracing of the overall structure is the responsibility of the building designer. For general guidance regarding fabrication, quality control, storage, delivery, erection and bracing, consult ANSI/TPI1 Quality Criteria, DSB-89 and BCSI1 Building Component Safety Information available from Truss Plate Institute, 583 D'Onofrio Drive, Madison, WI 53719.

14515 N. Outer Forty,
Suite #300
Chesterfield, MO 63017

MiTek®

Symbols

PLATE LOCATION AND ORIENTATION

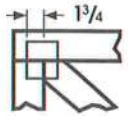

*Center plate on joint unless x,y offsets are indicated. Dimensions are in ft-in-sixteenths. Apply plates to both sides of truss and securely seat.

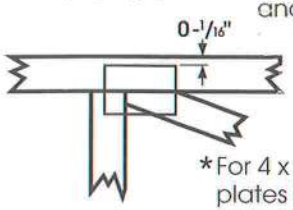

*For 4 x 2 orientation, locate plates 0 - 1/16" from outside edge of truss.

*This symbol indicates the required direction of slots in connector plates.

*** Plate location details available in MiTek 20/20 software or upon request.**

PLATE SIZE

4 x 4 — The first dimension is the width perpendicular to slots. Second dimension is the length parallel to slots.

LATERAL BRACING

Indicated by symbol shown and/or by text in the bracing section of the output. Use T, I or Eliminator bracing if indicated.

BEARING

Indicates location where bearings (supports) occur. Icons vary but reaction section indicates joint number where bearings occur.

Industry Standards:

ANSI/TPI1: National Design Specification for Metal Plate Connected Wood Truss Construction.
DSB-89: Design Standard for Bracing.
BCSI1: Building Component Safety Information, Guide to Good Practice for Handling, Installing & Bracing of Metal Plate Connected Wood Trusses.

Numbering System

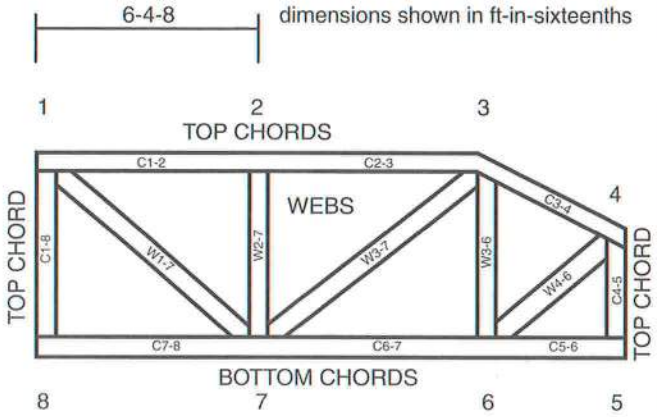

JOINTS ARE GENERALLY NUMBERED/LETTERED CLOCKWISE AROUND THE TRUSS STARTING AT THE JOINT FARTHEST TO THE LEFT.

CHORDS AND WEBS ARE IDENTIFIED BY END JOINT NUMBERS/LETTERS.

CONNECTOR PLATE CODE APPROVALS

BOCA	96-31, 95-43, 96-20-1, 96-67, 84-32
ICBO	4922, 5243, 5363, 3907
SBCCI	9667, 9730, 9604B, 9511, 9432A

MiTek®

TEE-LOK®

⚠General Safety Notes

Failure to Follow Could Cause Property Damage or Personal Injury

1. Additional stability bracing for truss system, e.g. diagonal or X-bracing, is always required. See BCSI1.
2. Never exceed the design loading shown and never stack materials on inadequately braced trusses.
3. Provide copies of this truss design to the building designer, erection supervisor, property owner and all other interested parties.
4. Cut members to bear tightly against each other.
5. Place plates on each face of truss at each joint and embed fully. Knots and wane at joint locations are regulated by ANSI/TPI1.
6. Design assumes trusses will be suitably protected from the environment in accord with ANSI/TPI1.
7. Unless otherwise noted, moisture content of lumber shall not exceed 19% at time of fabrication.
8. Unless expressly noted, this design is not applicable for use with fire retardant or preservative treated lumber.
9. Camber is a non-structural consideration and is the responsibility of truss fabricator. General practice is to camber for dead load deflection.
10. Plate type, size, orientation and location dimensions shown indicate minimum plating requirements.
11. Lumber used shall be of the species and size, and in all respects, equal to or better than that specified.
12. Top chords must be sheathed or purlins provided at spacing shown on design.
13. Bottom chords require lateral bracing at 10 ft. spacing, or less, if no ceiling is installed, unless otherwise noted.
14. Connections not shown are the responsibility of others.
15. Do not cut or alter truss member or plate without prior approval of a professional engineer.
16. Install and load vertically unless indicated otherwise.

© 2004 Mitek®

Job	Truss	Truss Type	Qty	Ply	SIMQUE HOMES
8833	J1	ROOF TRUSS	12	1	I9388138 Job Reference (optional)

Reese Building Components, INC., Sylvester Ga.

6.200 s Oct 18 2005 MiTek Industries, Inc. Fri Nov 11 13:30:48 2005 Page 1

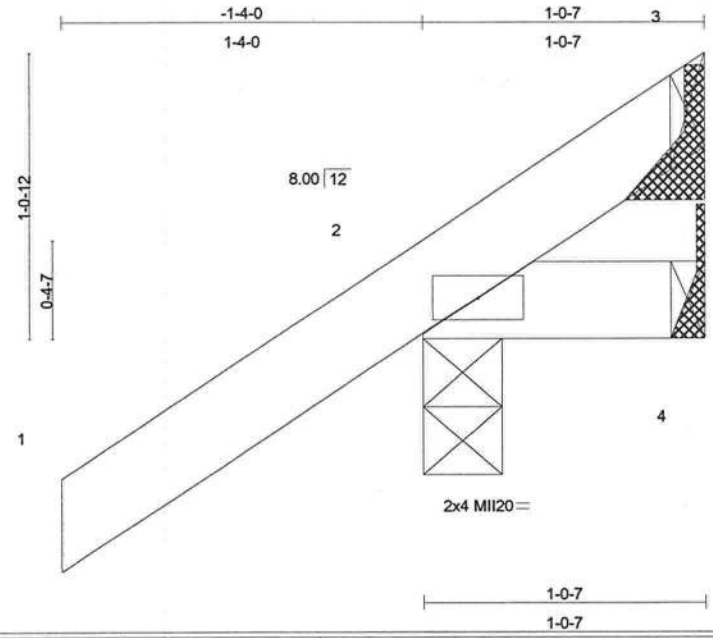

LOADING (psf)		SPACING	2-0-0	CSI		DEFL	in	(loc)	l/defl	L/d	PLATES	GRIP
TCLL	20.0	Plates Increase	1.25	TC	0.16	Vert(LL)	0.00	2	****	360	MII20	249/190
TCDL	10.0	Lumber Increase	1.25	BC	0.00	Vert(TL)	-0.00	2	>999	240		
BCLL	0.0	Rep Stress Incr	YES	WB	0.00	Horz(TL)	0.00	3	n/a	n/a		
BCDL	10.0	Code FBC2001/ANSI95		(Matrix)							Weight: 6 lb	

LUMBER
TOP CHORD 2 X 4 SYP No.2
BOT CHORD 2 X 4 SYP No.2

BRACING
TOP CHORD Sheathed or 1-0-7 oc purlins.
BOT CHORD Rigid ceiling directly applied or 10-0-0 oc bracing.

REACTIONS (lb/size) 2=178/0-3-8, 4=10/Mechanical, 3=-28/Mechanical
Max Horz 2=106(load case 4)
Max Uplift2=-188(load case 4), 3=-28(load case 1)
Max Grav 2=178(load case 1), 4=10(load case 1), 3=56(load case 4)

This truss design is based upon the building code shown. This code has been specified by the project engineer/architect, or building designer. The applicability of this code in any particular jurisdiction should be confirmed with the building official prior to truss fabrication. This determination is not the responsibility of the component/truss designer.

FORCES (lb) - Maximum Compression/Maximum Tension
TOP CHORD 1-2=0/43, 2-3=-51/32
BOT CHORD 2-4=0/0

NOTES
1) Wind: ASCE 7-98; 110mph (3-second gust); h=15ft; TCDL=5.0psf; BCDL=5.0psf; Category II; Exp C; enclosed; MWFRS gable end zone; cantilever left and right exposed ; end vertical left and right exposed; Lumber DOL=1.33 plate grip DOL=1.33.
2) Refer to girder(s) for truss to truss connections.
3) Provide mechanical connection (by others) of truss to bearing plate capable of withstanding 188 lb uplift at joint 2 and 28 lb uplift at joint 3.

LOAD CASE(S) Standard

Juan Garcia, FL Lic#58521
MiTek Industries, Inc.
14515 North Outer Forty Drive
Suite 300
Chesterfield, MO, 63017
FL Cert.#6634

November 14,2005

WARNING - Verify design parameters and READ NOTES ON THIS AND REVERSE SIDE BEFORE USE.
Design valid for use only with MiTek connectors. This design is based only upon parameters shown, and is for an individual building component. Applicability of design parameters and proper incorporation of component is responsibility of building designer - not truss designer. Bracing shown is for lateral support of individual web members only. Additional temporary bracing to insure stability during construction is the responsibility of the erector. Additional permanent bracing of the overall structure is the responsibility of the building designer. For general guidance regarding fabrication, quality control, storage, delivery, erection and bracing, consult ANSI/TPI1 Quality Criteria, DSB-89 and BCSI1 Building Component Safety Information available from Truss Plate Institute, 583 D'Onofrio Drive, Madison, WI 53719.

14515 N. Outer Forty,
Suite #300
Chesterfield, MO 63017

MiTek®

Symbols

PLATE LOCATION AND ORIENTATION

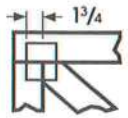

*Center plate on joint unless x,y offsets are indicated. Dimensions are in ft-in-sixteenths. Apply plates to both sides of truss and securely seat.

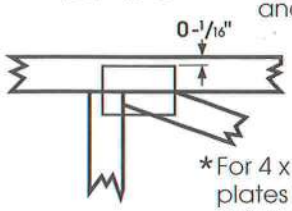

*For 4 x 2 orientation, locate plates 0 - 1/16" from outside edge of truss.

*This symbol indicates the required direction of slots in connector plates.

*** Plate location details available in MiTek 20/20 software or upon request.**

PLATE SIZE

4 x 4 — The first dimension is the width perpendicular to slots. Second dimension is the length parallel to slots.

LATERAL BRACING

Indicated by symbol shown and/or by text in the bracing section of the output. Use T, I or Eliminator bracing if indicated.

BEARING

Indicates location where bearings (supports) occur. Icons vary but reaction section indicates joint number where bearings occur.

Industry Standards:

ANSI/TPI1: National Design Specification for Metal Plate Connected Wood Truss Construction.
DSB-89: Design Standard for Bracing.
BCSI1: Building Component Safety Information, Guide to Good Practice for Handling, Installing & Bracing of Metal Plate Connected Wood Trusses.

Numbering System

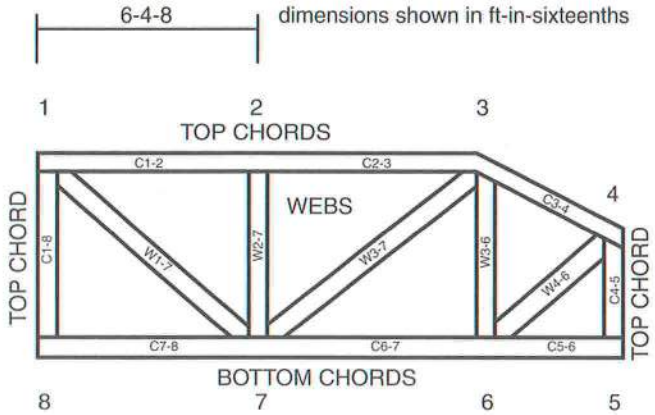

JOINTS ARE GENERALLY NUMBERED/LETTERED CLOCKWISE AROUND THE TRUSS STARTING AT THE JOINT FARTHEST TO THE LEFT.

CHORDS AND WEBS ARE IDENTIFIED BY END JOINT NUMBERS/LETTERS.

CONNECTOR PLATE CODE APPROVALS

BOCA	96-31, 95-43, 96-20-1, 96-67, 84-32
ICBO	4922, 5243, 5363, 3907
SBCCI	9667, 9730, 9604B, 9511, 9432A

MiTek®

TEE-LOK®

⚠General Safety Notes

Failure to Follow Could Cause Property Damage or Personal Injury

1. Additional stability bracing for truss system, e.g. diagonal or X-bracing, is always required. See BCSI1.
2. Never exceed the design loading shown and never stack materials on inadequately braced trusses.
3. Provide copies of this truss design to the building designer, erection supervisor, property owner and all other interested parties.
4. Cut members to bear tightly against each other.
5. Place plates on each face of truss at each joint and embed fully. Knots and wane at joint locations are regulated by ANSI/TPI1.
6. Design assumes trusses will be suitably protected from the environment in accord with ANSI/TPI1.
7. Unless otherwise noted, moisture content of lumber shall not exceed 19% at time of fabrication.
8. Unless expressly noted, this design is not applicable for use with fire retardant or preservative treated lumber.
9. Camber is a non-structural consideration and is the responsibility of truss fabricator. General practice is to camber for dead load deflection.
10. Plate type, size, orientation and location dimensions shown indicate minimum plating requirements.
11. Lumber used shall be of the species and size, and in all respects, equal to or better than that specified.
12. Top chords must be sheathed or purlins provided at spacing shown on design.
13. Bottom chords require lateral bracing at 10 ft. spacing, or less, if no ceiling is installed, unless otherwise noted.
14. Connections not shown are the responsibility of others.
15. Do not cut or alter truss member or plate without prior approval of a professional engineer.
16. Install and load vertically unless indicated otherwise.

© 2004 Mitek®

Job	Truss	Truss Type	Qty	Ply	SIMQUE HOMES
8833	J3	ROOF TRUSS	12	1	I9388139 Job Reference (optional)

Reese Building Components, INC., Sylvester Ga. 6.200 s Oct 18 2005 MiTek Industries, Inc. Fri Nov 11 13:30:48 2005 Page 1

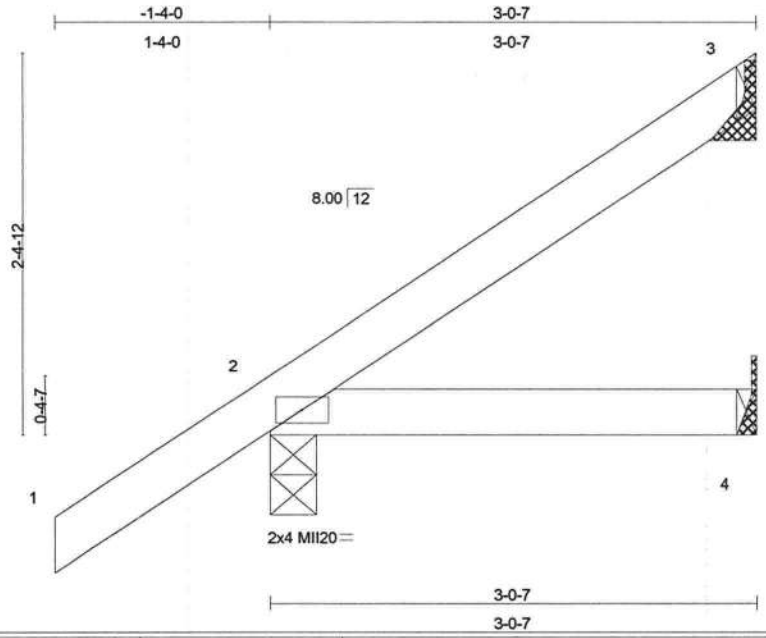

LOADING (psf)		SPACING	2-0-0	CSI		DEFL	in	(loc)	l/defl	L/d	PLATES	GRIP
TCLL	20.0	Plates Increase	1.25	TC	0.18	Vert(LL)	0.00	2	****	360	MII20	249/190
TCDL	10.0	Lumber Increase	1.25	BC	0.04	Vert(TL)	-0.00	2-4	>999	240		
BCLL	0.0	Rep Stress Incr	YES	WB	0.00	Horz(TL)	-0.00	3	n/a	n/a		
BCDL	10.0	Code FBC2001/ANSI95		(Matrix)							Weight: 13 lb	

LUMBER
TOP CHORD 2 X 4 SYP No.2
BOT CHORD 2 X 4 SYP No.2

BRACING
TOP CHORD Sheathed or 3-0-7 oc purlins.
BOT CHORD Rigid ceiling directly applied or 10-0-0 oc bracing.

REACTIONS (lb/size) 3=58/Mechanical, 2=223/0-3-8, 4=28/Mechanical
Max Horz 2=176(load case 4)
Max Uplift3=-66(load case 4), 2=-147(load case 4)

FORCES (lb) - Maximum Compression/Maximum Tension
TOP CHORD 1-2=0/44, 2-3=-62/25
BOT CHORD 2-4=0/0

This truss design is based upon the building code shown. This code has been specified by the project engineer/architect, or building designer. The applicability of this code in any particular jurisdiction should be confirmed with the building official prior to truss fabrication. This determination is not the responsibility of the component/truss designer.

NOTES
1) Wind: ASCE 7-98; 110mph (3-second gust); h=15ft; TCDL=5.0psf; BCDL=5.0psf; Category II; Exp C; enclosed; MWFRS gable end zone; cantilever left and right exposed ; end vertical left and right exposed; Lumber DOL=1.33 plate grip DOL=1.33.
2) Refer to girder(s) for truss to truss connections.
3) Provide mechanical connection (by others) of truss to bearing plate capable of withstanding 66 lb uplift at joint 3 and 147 lb uplift at joint 2.

LOAD CASE(S) Standard

Juan Garcia, FL Lic #58521
MiTek Industries, Inc.
14515 North Outer Forty Drive
Suite 300
Chesterfield, MO, 63017
FL Cert.#6634

November 14,2005

WARNING - Verify design parameters and READ NOTES ON THIS AND REVERSE SIDE BEFORE USE.
Design valid for use only with MiTek connectors. This design is based only upon parameters shown, and is for an individual building component. Applicability of design parameters and proper incorporation of component is responsibility of building designer - not truss designer. Bracing shown is for lateral support of individual web members only. Additional temporary bracing to insure stability during construction is the responsibility of the erector. Additional permanent bracing of the overall structure is the responsibility of the building designer. For general guidance regarding fabrication, quality control, storage, delivery, erection and bracing, consult ANSI/TPI1 Quality Criteria, DSB-89 and BCSI1 Building Component Safety Information available from Truss Plate Institute, 583 D'Onofrio Drive, Madison, WI 53719.

14515 N. Outer Forty,
Suite #300
Chesterfield, MO 63017

MiTek®

Symbols

PLATE LOCATION AND ORIENTATION

*Center plate on joint unless x,y offsets are indicated. Dimensions are in ft-in-sixteenths. Apply plates to both sides of truss and securely seat.

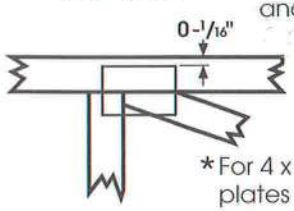

*For 4 x 2 orientation, locate plates 0 - 1/16" from outside edge of truss.

*This symbol indicates the required direction of slots in connector plates.

*** Plate location details available in MiTek 20/20 software or upon request.**

PLATE SIZE

4 x 4 — The first dimension is the width perpendicular to slots. Second dimension is the length parallel to slots.

LATERAL BRACING

Indicated by symbol shown and/or by text in the bracing section of the output. Use T, I or Eliminator bracing if indicated.

BEARING

Indicates location where bearings (supports) occur. Icons vary but reaction section indicates joint number where bearings occur.

Industry Standards:

ANSI/TPI1: National Design Specification for Metal Plate Connected Wood Truss Construction.
DSB-89: Design Standard for Bracing.
BCSI1: Building Component Safety Information, Guide to Good Practice for Handling, Installing & Bracing of Metal Plate Connected Wood Trusses.

Numbering System

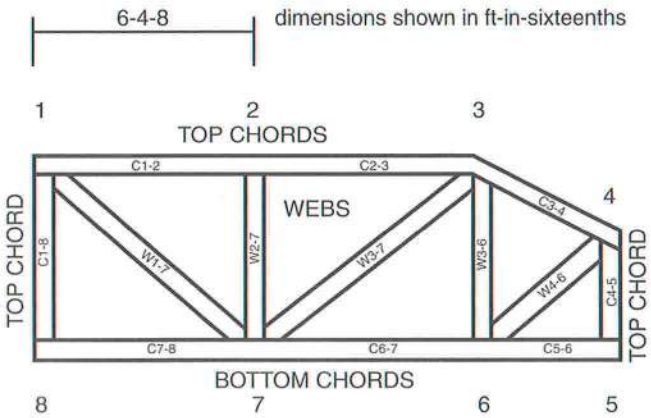

JOINTS ARE GENERALLY NUMBERED/LETTERED CLOCKWISE AROUND THE TRUSS STARTING AT THE JOINT FARTHEST TO THE LEFT.

CHORDS AND WEBS ARE IDENTIFIED BY END JOINT NUMBERS/LETTERS.

CONNECTOR PLATE CODE APPROVALS

BOCA	96-31, 95-43, 96-20-1, 96-67, 84-32
ICBO	4922, 5243, 5363, 3907
SBCCI	9667, 9730, 9604B, 9511, 9432A

MiTek®

TEE-LOK®

⚠General Safety Notes

Failure to Follow Could Cause Property Damage or Personal Injury

1. Additional stability bracing for truss system, e.g. diagonal or X-bracing, is always required. See BCSI1.
2. Never exceed the design loading shown and never stack materials on inadequately braced trusses.
3. Provide copies of this truss design to the building designer, erection supervisor, property owner and all other interested parties.
4. Cut members to bear tightly against each other.
5. Place plates on each face of truss at each joint and embed fully. Knots and wane at joint locations are regulated by ANSI/TPI1.
6. Design assumes trusses will be suitably protected from the environment in accord with ANSI/TPI1.
7. Unless otherwise noted, moisture content of lumber shall not exceed 19% at time of fabrication.
8. Unless expressly noted, this design is not applicable for use with fire retardant or preservative treated lumber.
9. Camber is a non-structural consideration and is the responsibility of truss fabricator. General practice is to camber for dead load deflection.
10. Plate type, size, orientation and location dimensions shown indicate minimum plating requirements.
11. Lumber used shall be of the species and size, and in all respects, equal to or better than that specified.
12. Top chords must be sheathed or purlins provided at spacing shown on design.
13. Bottom chords require lateral bracing at 10 ft. spacing, or less, if no ceiling is installed, unless otherwise noted.
14. Connections not shown are the responsibility of others.
15. Do not cut or alter truss member or plate without prior approval of a professional engineer.
16. Install and load vertically unless indicated otherwise.

© 2004 Mitek®

Job	Truss	Truss Type	Qty	Ply	SIMQUE HOMES
8833	J5	ROOF TRUSS	8	1	I9388140 Job Reference (optional)

Reese Building Components, INC., Sylvester Ga. 6.200 s Oct 18 2005 MiTek Industries, Inc. Fri Nov 11 13:30:49 2005 Page 1

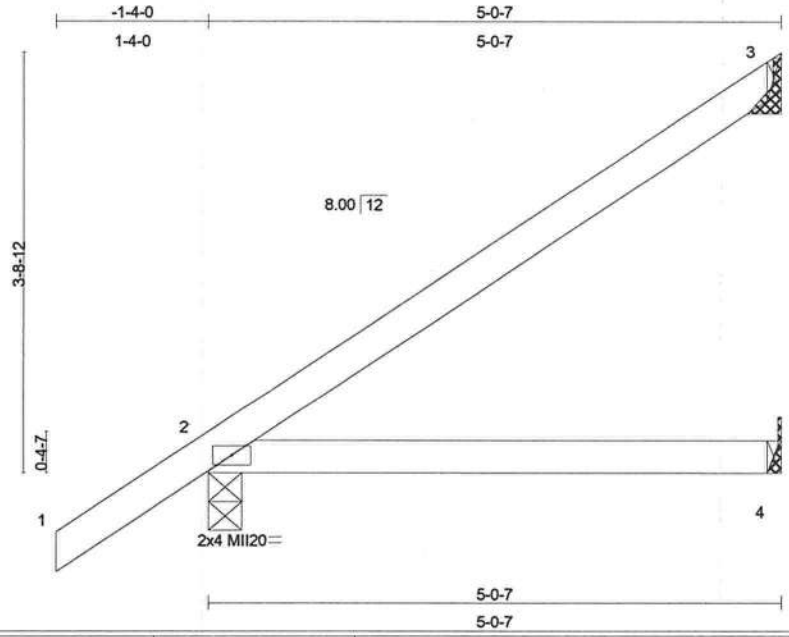

LOADING (psf)		SPACING	2-0-0	CSI		DEFL	in	(loc)	l/defl	L/d	PLATES	GRIP
TCLL	20.0	Plates Increase	1.25	TC	0.27	Vert(LL)	0.00	2	****	360	MII20	249/190
TCDL	10.0	Lumber Increase	1.25	BC	0.11	Vert(TL)	-0.03	2-4	>999	240		
BCLL	0.0	Rep Stress Incr	YES	WB	0.00	Horz(TL)	-0.00	3	n/a	n/a		
BCDL	10.0	Code FBC2001/ANSI95		(Matrix)							Weight: 19 lb	

LUMBER
TOP CHORD 2 X 4 SYP No.2
BOT CHORD 2 X 4 SYP No.2

BRACING
TOP CHORD Sheathed or 5-0-7 oc purlins.
BOT CHORD Rigid ceiling directly applied or 10-0-0 oc bracing.

REACTIONS (lb/size) 3=129/Mechanical, 2=293/0-3-8, 4=48/Mechanical
Max Horz 2=251(load case 4)
Max Uplift3=-152(load case 4), 2=-143(load case 4)

FORCES (lb) - Maximum Compression/Maximum Tension
TOP CHORD 1-2=0/44, 2-3=-114/57
BOT CHORD 2-4=0/0

This truss design is based upon the building code shown. This code has been specified by the project engineer/architect, or building designer. The applicability of this code in any particular jurisdiction should be confirmed with the building official prior to truss fabrication. This determination is not the responsibility of the component/truss designer.

NOTES
1) Wind: ASCE 7-98; 110mph (3-second gust); h=15ft; TCDL=5.0psf; BCDL=5.0psf; Category II; Exp C; enclosed; MWFRS gable end zone; cantilever left and right exposed ; end vertical left and right exposed; Lumber DOL=1.33 plate grip DOL=1.33.
2) Refer to girder(s) for truss to truss connections.
3) Provide mechanical connection (by others) of truss to bearing plate capable of withstanding 152 lb uplift at joint 3 and 143 lb uplift at joint 2.

LOAD CASE(S) Standard

Juan Garcia, FL Lic #58521
MiTek Industries, Inc.
14515 North Outer Forty Drive
Suite 300
Chesterfield, MO, 63017
FL Cert.#6634

November 14,2005

WARNING - Verify design parameters and READ NOTES ON THIS AND REVERSE SIDE BEFORE USE.
Design valid for use only with MiTek connectors. This design is based only upon parameters shown, and is for an individual building component. Applicability of design parameters and proper incorporation of component is responsibility of building designer - not truss designer. Bracing shown is for lateral support of individual web members only. Additional temporary bracing to insure stability during construction is the responsibility of the erector. Additional permanent bracing of the overall structure is the responsibility of the building designer. For general guidance regarding fabrication, quality control, storage, delivery, erection and bracing, consult ANSI/TPI1 Quality Criteria, DSB-89 and BCSI1 Building Component Safety Information available from Truss Plate Institute, 583 D'Onofrio Drive, Madison, WI 53719.

14515 N. Outer Forty,
Suite #300
Chesterfield, MO 63017

MiTek®

Symbols

PLATE LOCATION AND ORIENTATION

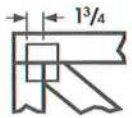

*Center plate on joint unless x,y offsets are indicated. Dimensions are in ft-in-sixteenths. Apply plates to both sides of truss and securely seat.

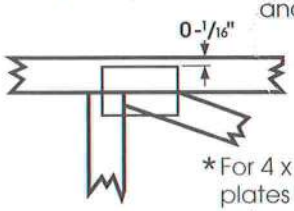

*For 4 x 2 orientation, locate plates 0 - 1/16" from outside edge of truss.

*This symbol indicates the required direction of slots in connector plates.

*** Plate location details available in MiTek 20/20 software or upon request.**

PLATE SIZE

4 x 4 — The first dimension is the width perpendicular to slots. Second dimension is the length parallel to slots.

LATERAL BRACING

Indicated by symbol shown and/or by text in the bracing section of the output. Use T, I or Eliminator bracing if indicated.

BEARING

Indicates location where bearings (supports) occur. Icons vary but reaction section indicates joint number where bearings occur.

Industry Standards:

ANSI/TPI1: National Design Specification for Metal Plate Connected Wood Truss Construction.
DSB-89: Design Standard for Bracing.
BCSI1: Building Component Safety Information, Guide to Good Practice for Handling, Installing & Bracing of Metal Plate Connected Wood Trusses.

Numbering System

6-4-8 — dimensions shown in ft-in-sixteenths

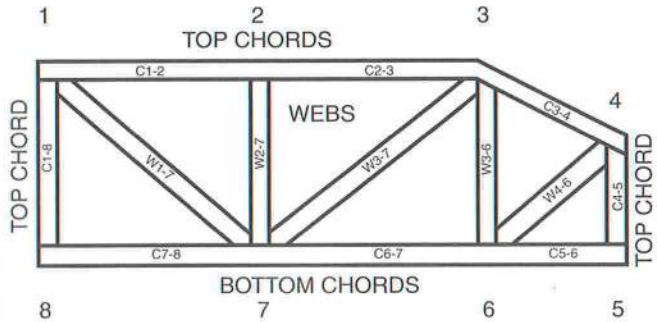

JOINTS ARE GENERALLY NUMBERED/LETTERED CLOCKWISE AROUND THE TRUSS STARTING AT THE JOINT FARTHEST TO THE LEFT.

CHORDS AND WEBS ARE IDENTIFIED BY END JOINT NUMBERS/LETTERS.

CONNECTOR PLATE CODE APPROVALS

BOCA	96-31, 95-43, 96-20-1, 96-67, 84-32
ICBO	4922, 5243, 5363, 3907
SBCCI	9667, 9730, 9604B, 9511, 9432A

MiTek®

TEE-LOK®

⚠General Safety Notes

Failure to Follow Could Cause Property Damage or Personal Injury

1. Additional stability bracing for truss system, e.g. diagonal or X-bracing, is always required. See BCSI1.
2. Never exceed the design loading shown and never stack materials on inadequately braced trusses.
3. Provide copies of this truss design to the building designer, erection supervisor, property owner and all other interested parties.
4. Cut members to bear tightly against each other.
5. Place plates on each face of truss at each joint and embed fully. Knots and wane at joint locations are regulated by ANSI/TPI1.
6. Design assumes trusses will be suitably protected from the environment in accord with ANSI/TPI1.
7. Unless otherwise noted, moisture content of lumber shall not exceed 19% at time of fabrication.
8. Unless expressly noted, this design is not applicable for use with fire retardant or preservative treated lumber.
9. Camber is a non-structural consideration and is the responsibility of truss fabricator. General practice is to camber for dead load deflection.
10. Plate type, size, orientation and location dimensions shown indicate minimum plating requirements.
11. Lumber used shall be of the species and size, and in all respects, equal to or better than that specified.
12. Top chords must be sheathed or purlins provided at spacing shown on design.
13. Bottom chords require lateral bracing at 10 ft. spacing, or less, if no ceiling is installed, unless otherwise noted.
14. Connections not shown are the responsibility of others.
15. Do not cut or alter truss member or plate without prior approval of a professional engineer.
16. Install and load vertically unless indicated otherwise.

© 2004 Mitek®

Job	Truss	Truss Type	Qty	Ply	SIMQUE HOMES
8833	J5A	ROOF TRUSS	2	1	I9388141 Job Reference (optional)

Reese Building Components, INC., Sylvester Ga. 6.200 s Oct 18 2005 MiTek Industries, Inc. Fri Nov 11 13:30:49 2005 Page 1

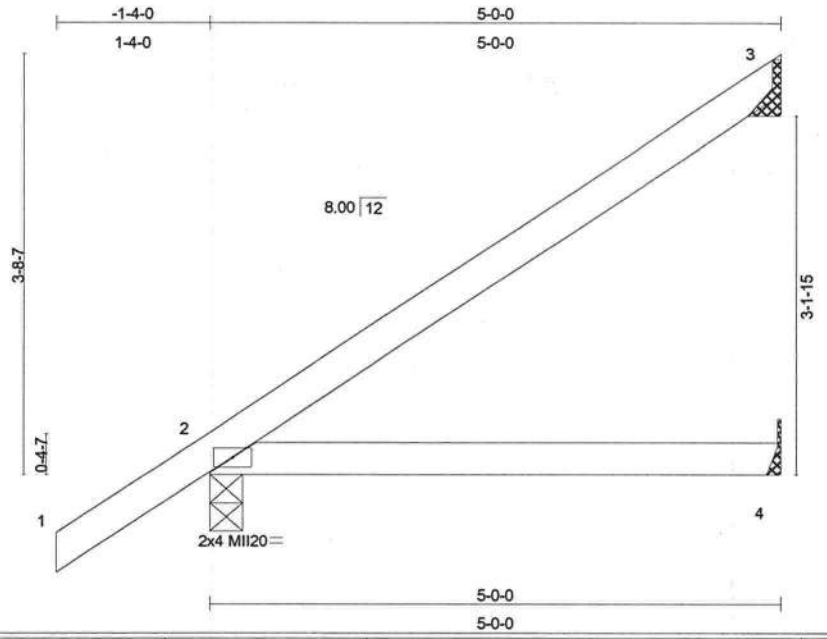

LOADING (psf)		SPACING	2-0-0	CSI		DEFL	in	(loc)	l/defl	L/d	PLATES	GRIP
TCLL	20.0	Plates Increase	1.25	TC	0.27	Vert(LL)	0.00	2	****	360	MII20	249/190
TCDL	10.0	Lumber Increase	1.25	BC	0.10	Vert(TL)	-0.03	2-4	>999	240		
BCLL	0.0	Rep Stress Incr	YES	WB	0.00	Horz(TL)	-0.00	3	n/a	n/a		
BCDL	10.0	Code FBC2001/ANSI95		(Matrix)							Weight: 19 lb	

LUMBER
TOP CHORD 2 X 4 SYP No.2
BOT CHORD 2 X 4 SYP No.2

BRACING
TOP CHORD Sheathed or 5-0-0 oc purlins.
BOT CHORD Rigid ceiling directly applied or 10-0-0 oc bracing.

REACTIONS (lb/size) 3=127/Mechanical, 2=292/0-3-8, 4=48/Mechanical
Max Horz 2=249(load case 4)
Max Uplift3=-150(load case 4), 2=-143(load case 4)

FORCES (lb) - Maximum Compression/Maximum Tension
TOP CHORD 1-2=0/44, 2-3=-113/57
BOT CHORD 2-4=0/0

This truss design is based upon the building code shown. This code has been specified by the project engineer/architect, or building designer. The applicability of this code in any particular jurisdiction should be confirmed with the building official prior to truss fabrication. This determination is not the responsibility of the component/truss designer.

NOTES
1) Wind: ASCE 7-98; 110mph (3-second gust); h=15ft; TCDL=5.0psf; BCDL=5.0psf; Category II; Exp C; enclosed; MWFRS gable end zone; cantilever left and right exposed ; end vertical left and right exposed; Lumber DOL=1.33 plate grip DOL=1.33.
2) Refer to girder(s) for truss to truss connections.
3) Provide mechanical connection (by others) of truss to bearing plate capable of withstanding 150 lb uplift at joint 3 and 143 lb uplift at joint 2.

LOAD CASE(S) Standard

Juan Garcia, FL Lic #58521
MiTek Industries, Inc.
14515 North Outer Forty Drive
Suite 300
Chesterfield, MO, 63017
FL Cert.#6634

November 14,2005

WARNING - Verify design parameters and READ NOTES ON THIS AND REVERSE SIDE BEFORE USE.
Design valid for use only with MiTek connectors. This design is based only upon parameters shown, and is for an individual building component. Applicability of design parameters and proper incorporation of component is responsibility of building designer - not truss designer. Bracing shown is for lateral support of individual web members only. Additional temporary bracing to insure stability during construction is the responsibility of the erector. Additional permanent bracing of the overall structure is the responsibility of the building designer. For general guidance regarding fabrication, quality control, storage, delivery, erection and bracing, consult ANSI/TPI1 Quality Criteria, DSB-89 and BCSI1 Building Component Safety Information available from Truss Plate Institute, 583 D'Onofrio Drive, Madison, WI 53719.

14515 N. Outer Forty,
Suite #300
Chesterfield, MO 63017

MiTek®

Symbols

PLATE LOCATION AND ORIENTATION

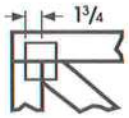

*Center plate on joint unless x,y offsets are indicated. Dimensions are in ft-in-sixteenths. Apply plates to both sides of truss and securely seat.

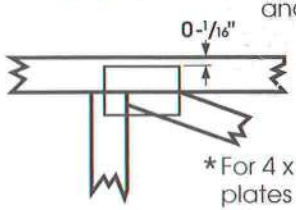

*For 4 x 2 orientation, locate plates 0 - 1/16" from outside edge of truss.

*This symbol indicates the required direction of slots in connector plates.

*** Plate location details available in MiTek 20/20 software or upon request.**

PLATE SIZE

4 x 4 — The first dimension is the width perpendicular to slots. Second dimension is the length parallel to slots.

LATERAL BRACING

Indicated by symbol shown and/or by text in the bracing section of the output. Use T, I or Eliminator bracing if indicated.

BEARING

Indicates location where bearings (supports) occur. Icons vary but reaction section indicates joint number where bearings occur.

Industry Standards:

ANSI/TPI1: National Design Specification for Metal Plate Connected Wood Truss Construction.
DSB-89: Design Standard for Bracing.
BCSI1: Building Component Safety Information, Guide to Good Practice for Handling, Installing & Bracing of Metal Plate Connected Wood Trusses.

Numbering System

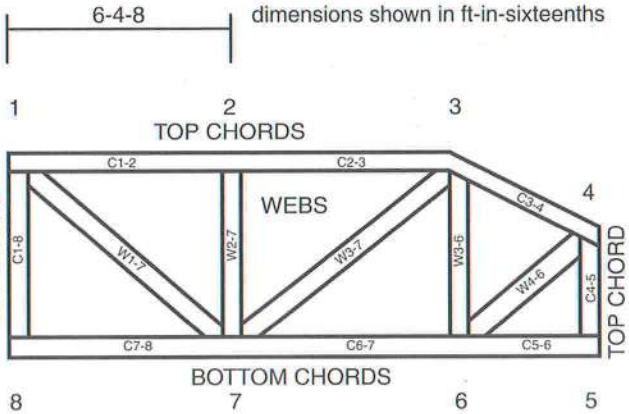

JOINTS ARE GENERALLY NUMBERED/LETTERED CLOCKWISE AROUND THE TRUSS STARTING AT THE JOINT FARTHEST TO THE LEFT.

CHORDS AND WEBS ARE IDENTIFIED BY END JOINT NUMBERS/LETTERS.

CONNECTOR PLATE CODE APPROVALS

BOCA	96-31, 95-43, 96-20-1, 96-67, 84-32
ICBO	4922, 5243, 5363, 3907
SBCCI	9667, 9730, 9604B, 9511, 9432A

MiTek®

TEE-LOK®

⚠General Safety Notes

Failure to Follow Could Cause Property Damage or Personal Injury

1. Additional stability bracing for truss system, e.g. diagonal or X-bracing, is always required. See BCSI1.
2. Never exceed the design loading shown and never stack materials on inadequately braced trusses.
3. Provide copies of this truss design to the building designer, erection supervisor, property owner and all other interested parties.
4. Cut members to bear tightly against each other.
5. Place plates on each face of truss at each joint and embed fully. Knots and wane at joint locations are regulated by ANSI/TPI1.
6. Design assumes trusses will be suitably protected from the environment in accord with ANSI/TPI1.
7. Unless otherwise noted, moisture content of lumber shall not exceed 19% at time of fabrication.
8. Unless expressly noted, this design is not applicable for use with fire retardant or preservative treated lumber.
9. Camber is a non-structural consideration and is the responsibility of truss fabricator. General practice is to camber for dead load deflection.
10. Plate type, size, orientation and location dimensions shown indicate minimum plating requirements.
11. Lumber used shall be of the species and size, and in all respects, equal to or better than that specified.
12. Top chords must be sheathed or purlins provided at spacing shown on design.
13. Bottom chords require lateral bracing at 10 ft. spacing, or less, if no ceiling is installed, unless otherwise noted.
14. Connections not shown are the responsibility of others.
15. Do not cut or alter truss member or plate without prior approval of a professional engineer.
16. Install and load vertically unless indicated otherwise.

© 2004 Mitek®

Job	Truss	Truss Type	Qty	Ply	SIMQUE HOMES
8833	J6	ROOF TRUSS	28	1	I9388142 Job Reference (optional)

Reese Building Components, INC., Sylvester Ga.

6.200 s Oct 18 2005 MiTek Industries, Inc. Fri Nov 11 13:30:49 2005 Page 1

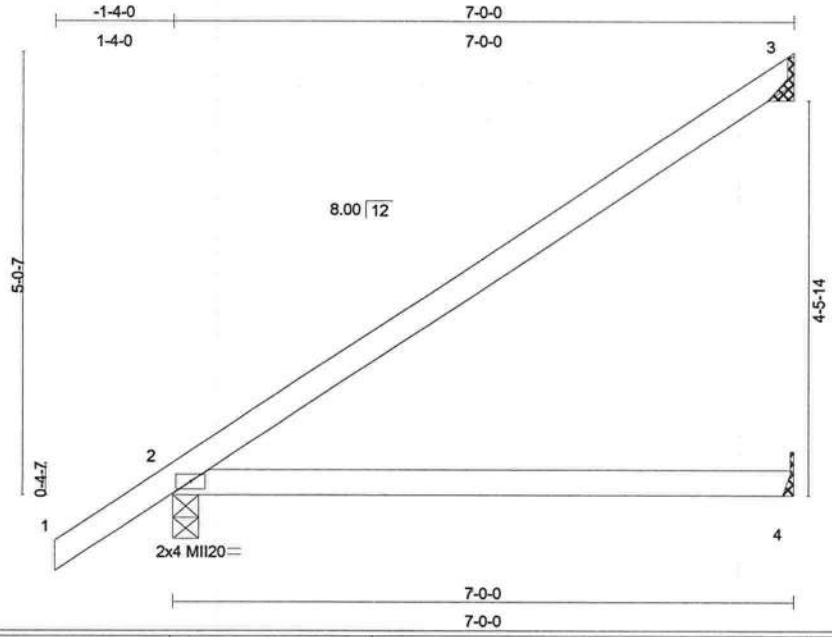

Scale = 1:26.2

LOADING (psf)		SPACING	2-0-0	CSI		DEFL	in	(loc)	l/defl	L/d	PLATES	GRIP
TCLL	20.0	Plates Increase	1.25	TC	0.63	Vert(LL)	0.00	2	****	360	MII20	249/190
TCDL	10.0	Lumber Increase	1.25	BC	0.21	Vert(TL)	-0.11	2-4	>730	240		
BCLL	0.0	Rep Stress Incr	YES	WB	0.00	Horz(TL)	-0.00	3	n/a	n/a		
BCDL	10.0	Code FBC2001/ANSI95		(Matrix)							Weight: 26 lb	

LUMBER
TOP CHORD 2 X 4 SYP No.2
BOT CHORD 2 X 4 SYP No.2

BRACING
TOP CHORD Sheathed or 6-0-0 oc purlins.
BOT CHORD Rigid ceiling directly applied or 10-0-0 oc bracing.

REACTIONS (lb/size) 3=191/Mechanical, 2=368/0-3-8, 4=68/Mechanical
Max Horz 2=324(load case 4)
Max Uplift3=-227(load case 4), 2=-147(load case 4)

FORCES (lb) - Maximum Compression/Maximum Tension
TOP CHORD 1-2=0/44, 2-3=-167/86
BOT CHORD 2-4=0/0

This truss design is based upon the building code shown. This code has been specified by the project engineer/architect, or building designer. The applicability of this code in any particular jurisdiction should be confirmed with the building official prior to truss fabrication. This determination is not the responsibility of the component/truss designer.

NOTES
1) Wind: ASCE 7-98; 110mph (3-second gust); h=15ft; TCDL=5.0psf; BCDL=5.0psf; Category II; Exp C; enclosed; MWFRS gable end zone; cantilever left and right exposed ; end vertical left and right exposed; Lumber DOL=1.33 plate grip DOL=1.33.
2) Refer to girder(s) for truss to truss connections.
3) Provide mechanical connection (by others) of truss to bearing plate capable of withstanding 227 lb uplift at joint 3 and 147 lb uplift at joint 2.

LOAD CASE(S) Standard

Juan Garcia, FL Lic #58521
MiTek Industries, Inc.
14515 North Outer Forty Drive
Suite 300
Chesterfield, MO, 63017
FL Cert.#6634

November 14,2005

WARNING - Verify design parameters and READ NOTES ON THIS AND REVERSE SIDE BEFORE USE.
Design valid for use only with MiTek connectors. This design is based only upon parameters shown, and is for an individual building component. Applicability of design parameters and proper incorporation of component is responsibility of building designer - not truss designer. Bracing shown is for lateral support of individual web members only. Additional temporary bracing to insure stability during construction is the responsibility of the erector. Additional permanent bracing of the overall structure is the responsibility of the building designer. For general guidance regarding fabrication, quality control, storage, delivery, erection and bracing, consult **ANSI/TPI1 Quality Criteria, DSB-89 and BCSI1 Building Component Safety Information** available from Truss Plate Institute, 583 D'Onofrio Drive, Madison, WI 53719.

14515 N. Outer Forty,
Suite #300
Chesterfield, MO 63017

MiTek®

Symbols

PLATE LOCATION AND ORIENTATION

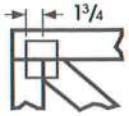

*Center plate on joint unless x,y offsets are indicated. Dimensions are in ft-in-sixteenths. Apply plates to both sides of truss and securely seat.

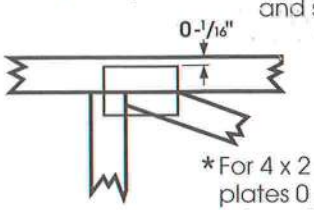

*For 4 x 2 orientation, locate plates 0 - 1/16" from outside edge of truss.

*This symbol indicates the required direction of slots in connector plates.

*** Plate location details available in MiTek 20/20 software or upon request.**

PLATE SIZE

4 x 4 — The first dimension is the width perpendicular to slots. Second dimension is the length parallel to slots.

LATERAL BRACING

Indicated by symbol shown and/or by text in the bracing section of the output. Use T, I or Eliminator bracing if indicated.

BEARING

Indicates location where bearings (supports) occur. Icons vary but reaction section indicates joint number where bearings occur.

Industry Standards:

ANSI/TPI1: National Design Specification for Metal Plate Connected Wood Truss Construction.
DSB-89: Design Standard for Bracing.
BCSI1: Building Component Safety Information, Guide to Good Practice for Handling, Installing & Bracing of Metal Plate Connected Wood Trusses.

Numbering System

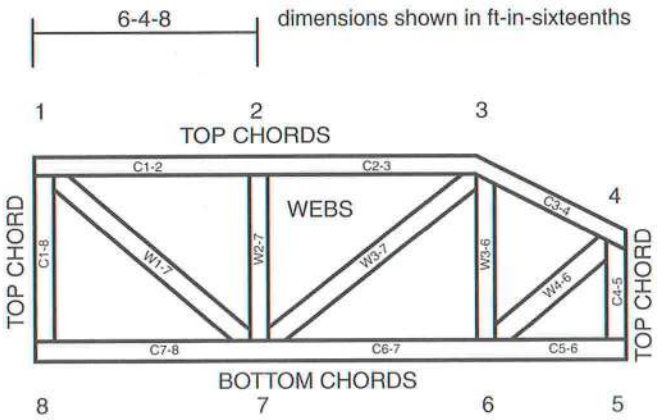

JOINTS ARE GENERALLY NUMBERED/LETTERED CLOCKWISE AROUND THE TRUSS STARTING AT THE JOINT FARTHEST TO THE LEFT.

CHORDS AND WEBS ARE IDENTIFIED BY END JOINT NUMBERS/LETTERS.

CONNECTOR PLATE CODE APPROVALS

BOCA	96-31, 95-43, 96-20-1, 96-67, 84-32
ICBO	4922, 5243, 5363, 3907
SBCCI	9667, 9730, 9604B, 9511, 9432A

MiTek®

TEE-LOK®

⚠General Safety Notes

Failure to Follow Could Cause Property Damage or Personal Injury

1. Additional stability bracing for truss system, e.g. diagonal or X-bracing, is always required. See BCSI1.
2. Never exceed the design loading shown and never stack materials on inadequately braced trusses.
3. Provide copies of this truss design to the building designer, erection supervisor, property owner and all other interested parties.
4. Cut members to bear tightly against each other.
5. Place plates on each face of truss at each joint and embed fully. Knots and wane at joint locations are regulated by ANSI/TPI1.
6. Design assumes trusses will be suitably protected from the environment in accord with ANSI/TPI1.
7. Unless otherwise noted, moisture content of lumber shall not exceed 19% at time of fabrication.
8. Unless expressly noted, this design is not applicable for use with fire retardant or preservative treated lumber.
9. Camber is a non-structural consideration and is the responsibility of truss fabricator. General practice is to camber for dead load deflection.
10. Plate type, size, orientation and location dimensions shown indicate minimum plating requirements.
11. Lumber used shall be of the species and size, and in all respects, equal to or better than that specified.
12. Top chords must be sheathed or purlins provided at spacing shown on design.
13. Bottom chords require lateral bracing at 10 ft. spacing, or less, if no ceiling is installed, unless otherwise noted.
14. Connections not shown are the responsibility of others.
15. Do not cut or alter truss member or plate without prior approval of a professional engineer.
16. Install and load vertically unless indicated otherwise.

© 2004 Mitek®

Job	Truss	Truss Type	Qty	Ply	SIMQUE HOMES
8833	PB1	HIP PIGGYBACK	2	1	I9388143 Job Reference (optional)

Reese Building Components, INC., Sylvester Ga. 6.200 s Oct 18 2005 MiTek Industries, Inc. Fri Nov 11 13:30:50 2005 Page 1

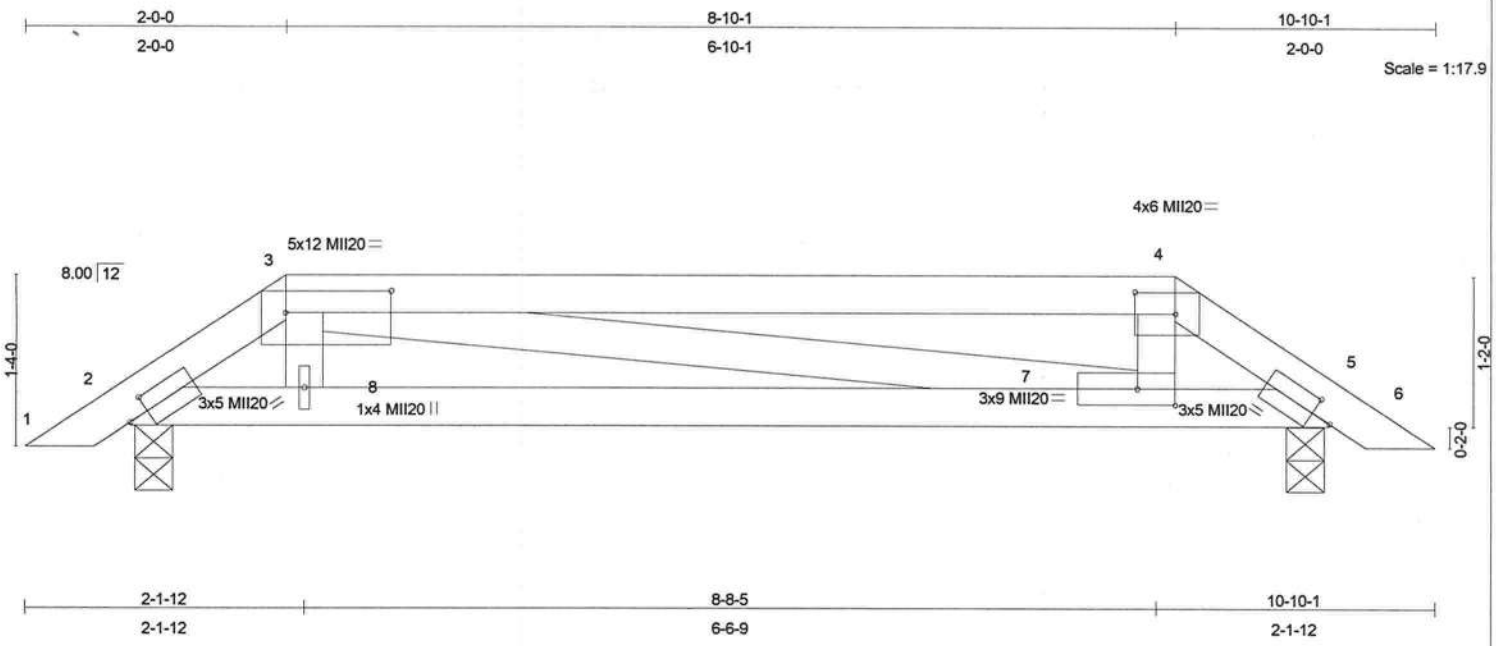

Plate Offsets (X,Y): [2:0-1-15,0-1-8], [3:0-9-12,0-2-0], [4:0-3-12,0-2-0], [5:0-1-15,0-1-8], [7:0-3-8,0-1-8]

LOADING (psf)		SPACING 2-0-0		CSI		DEFL	in	(loc)	l/defl	L/d	PLATES	GRIP
TCLL	20.0	Plates Increase	1.25	TC	0.48	Vert(LL)	0.05	7-8	>999	360	MII20	249/190
TCDL	10.0	Lumber Increase	1.25	BC	0.36	Vert(TL)	-0.09	7-8	>999	240		
BCLL	0.0	Rep Stress Incr	YES	WB	0.06	Horz(TL)	0.04	6	n/a	n/a		
BCDL	10.0	Code FBC2001/ANSI95		(Matrix)							Weight: 42 lb	

LUMBER
TOP CHORD 2 X 4 SYP No.2
BOT CHORD 2 X 4 SYP No.2
WEBS 2 X 4 SYP No.3

BRACING
TOP CHORD Sheathed or 5-7-1 oc purlins.
BOT CHORD Rigid ceiling directly applied or 8-3-15 oc bracing.

This truss design is based upon the building code shown. This code has been specified by the project engineer/architect, or building designer. The applicability of this code in any particular jurisdiction should be confirmed with the building official prior to truss fabrication. This determination is not the responsibility of the component/truss designer.

REACTIONS (lb/size) 1=424/0-3-8, 6=424/0-3-8
Max Horz 1=53(load case 3)
Max Uplift1=-177(load case 3), 6=-177(load case 2)

FORCES (lb) - Maximum Compression/Maximum Tension
TOP CHORD 1-2=-213/113, 2-3=-1092/519, 3-4=-1044/519, 4-5=-1092/496, 5-6=-213/98
BOT CHORD 2-8=-561/1012, 7-8=-550/1044, 5-7=-494/1013
WEBS 3-8=0/189, 4-7=0/189, 3-7=-66/69

NOTES
1) Unbalanced roof live loads have been considered for this design.
2) Wind: ASCE 7-98; 110mph (3-second gust); h=15ft; TCDL=5.0psf; BCDL=5.0psf; Category II; Exp C; enclosed; MWFRS gable end zone; cantilever left and right exposed ; end vertical left and right exposed; Lumber DOL=1.33 plate grip DOL=1.33.
3) Provide adequate drainage to prevent water ponding.
4) Bearing at joint(s) 1, 6 considers parallel to grain value using ANSI/TPI 1 angle to grain formula. Building designer should verify capacity of bearing surface.
5) Provide mechanical connection (by others) of truss to bearing plate capable of withstanding 177 lb uplift at joint 1 and 177 lb uplift at joint 6.

LOAD CASE(S) Standard

Juan Garcia, FL Lic #58521
MiTek Industries, Inc.
14515 North Outer Forty Drive
Suite 300
Chesterfield, MO, 63017
FL Cert.#6634

November 14,2005

WARNING - Verify design parameters and READ NOTES ON THIS AND REVERSE SIDE BEFORE USE.
Design valid for use only with MiTek connectors. This design is based only upon parameters shown, and is for an individual building component. Applicability of design parameters and proper incorporation of component is responsibility of building designer - not truss designer. Bracing shown is for lateral support of individual web members only. Additional temporary bracing to insure stability during construction is the responsibility of the erector. Additional permanent bracing of the overall structure is the responsibility of the building designer. For general guidance regarding fabrication, quality control, storage, delivery, erection and bracing, consult ANSI/TPI1 Quality Criteria, DSB-89 and BCSI1 Building Component Safety Information available from Truss Plate Institute, 583 D'Onofrio Drive, Madison, WI 53719.

14515 N. Outer Forty,
Suite #300
Chesterfield, MO 63017

MiTek®

Symbols

PLATE LOCATION AND ORIENTATION

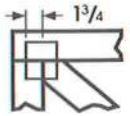

*Center plate on joint unless x,y offsets are indicated. Dimensions are in ft-in-sixteenths. Apply plates to both sides of truss and securely seat.

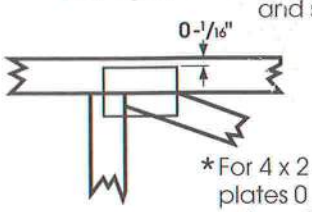

*For 4 x 2 orientation, locate plates 0 - 1/16" from outside edge of truss.

*This symbol indicates the required direction of slots in connector plates.

*** Plate location details available in MiTek 20/20 software or upon request.**

PLATE SIZE

4 x 4 — The first dimension is the width perpendicular to slots. Second dimension is the length parallel to slots.

LATERAL BRACING

Indicated by symbol shown and/or by text in the bracing section of the output. Use T, I or Eliminator bracing if indicated.

BEARING

Indicates location where bearings (supports) occur. Icons vary but reaction section indicates joint number where bearings occur.

Industry Standards:

ANSI/TPI1: National Design Specification for Metal Plate Connected Wood Truss Construction.
DSB-89: Design Standard for Bracing.
BCSI1: Building Component Safety Information, Guide to Good Practice for Handling, Installing & Bracing of Metal Plate Connected Wood Trusses.

Numbering System

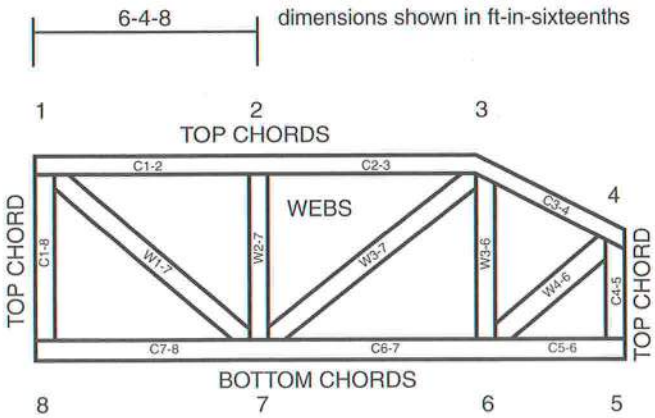

JOINTS ARE GENERALLY NUMBERED/LETTERED CLOCKWISE AROUND THE TRUSS STARTING AT THE JOINT FARTHEST TO THE LEFT.

CHORDS AND WEBS ARE IDENTIFIED BY END JOINT NUMBERS/LETTERS.

CONNECTOR PLATE CODE APPROVALS

BOCA	96-31, 95-43, 96-20-1, 96-67, 84-32
ICBO	4922, 5243, 5363, 3907
SBCCI	9667, 9730, 9604B, 9511, 9432A

MiTek®

TEE-LOK®

⚠General Safety Notes

Failure to Follow Could Cause Property Damage or Personal Injury

1. Additional stability bracing for truss system, e.g. diagonal or X-bracing, is always required. See BCSI1.
2. Never exceed the design loading shown and never stack materials on inadequately braced trusses.
3. Provide copies of this truss design to the building designer, erection supervisor, property owner and all other interested parties.
4. Cut members to bear tightly against each other.
5. Place plates on each face of truss at each joint and embed fully. Knots and wane at joint locations are regulated by ANSI/TPI1.
6. Design assumes trusses will be suitably protected from the environment in accord with ANSI/TPI1.
7. Unless otherwise noted, moisture content of lumber shall not exceed 19% at time of fabrication.
8. Unless expressly noted, this design is not applicable for use with fire retardant or preservative treated lumber.
9. Camber is a non-structural consideration and is the responsibility of truss fabricator. General practice is to camber for dead load deflection.
10. Plate type, size, orientation and location dimensions shown indicate minimum plating requirements.
11. Lumber used shall be of the species and size, and in all respects, equal to or better than that specified.
12. Top chords must be sheathed or purlins provided at spacing shown on design.
13. Bottom chords require lateral bracing at 10 ft. spacing, or less, if no ceiling is installed, unless otherwise noted.
14. Connections not shown are the responsibility of others.
15. Do not cut or alter truss member or plate without prior approval of a professional engineer.
16. Install and load vertically unless indicated otherwise.

© 2004 Mitek®

Job	Truss	Truss Type	Qty	Ply	SIMQUE HOMES
8833	PB2	HIP PIGGYBACK	2	1	I9388144 Job Reference (optional)

Reese Building Components, INC., Sylvester Ga. 6.200 s Oct 18 2005 MiTek Industries, Inc. Fri Nov 11 13:30:50 2005 Page 1

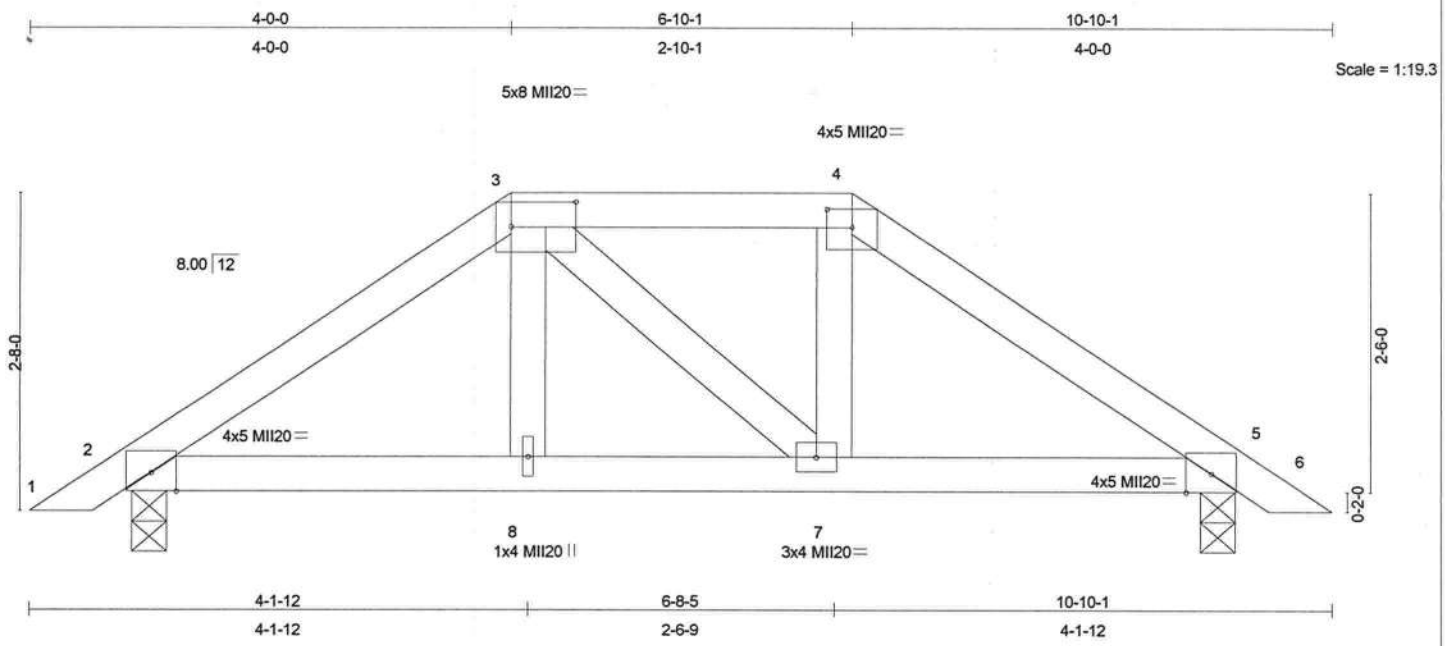

Plate Offsets (X,Y): [3:0-6-8,0-2-8], [4:0-2-8,0-1-13]

LOADING (psf)		SPACING 2-0-0		CSI		DEFL	in	(loc)	l/defl	L/d	PLATES	GRIP
TCLL	20.0	Plates Increase	1.25	TC	0.48	Vert(LL)	0.04	2-8	>999	360	MII20	249/190
TCDL	10.0	Lumber Increase	1.25	BC	0.38	Vert(TL)	-0.06	2-8	>999	240		
BCLL	0.0	Rep Stress Incr	YES	WB	0.04	Horz(TL)	0.05	6	n/a	n/a		
BCDL	10.0	Code FBC2001/ANSI95		(Matrix)							Weight: 42 lb	

LUMBER
TOP CHORD 2 X 4 SYP No.2
BOT CHORD 2 X 4 SYP No.2
WEBS 2 X 4 SYP No.3

BRACING
TOP CHORD Sheathed or 6-0-0 oc purlins.
BOT CHORD Rigid ceiling directly applied or 10-0-0 oc bracing.

This truss design is based upon the building code shown. This code has been specified by the project engineer/architect, or building designer. The applicability of this code in any particular jurisdiction should be confirmed with the building official prior to truss fabrication. This determination is not the responsibility of the component/truss designer.

REACTIONS (lb/size) 1=424/0-3-8, 6=424/0-3-8
Max Horz 1=-109(load case 2)
Max Uplift1=-129(load case 4), 6=-129(load case 5)

FORCES (lb) - Maximum Compression/Maximum Tension
TOP CHORD 1-2=-213/107, 2-3=-643/177, 3-4=-529/192, 4-5=-644/163, 5-6=-213/73
BOT CHORD 2-8=-198/520, 7-8=-199/528, 5-7=-109/521
WEBS 3-8=-9/123, 4-7=-28/139, 3-7=-113/114

NOTES
1) Unbalanced roof live loads have been considered for this design.
2) Wind: ASCE 7-98; 110mph (3-second gust); h=15ft; TCDL=5.0psf; BCDL=5.0psf; Category II; Exp C; enclosed; MWFRS gable end zone; cantilever left and right exposed ; end vertical left and right exposed; Lumber DOL=1.33 plate grip DOL=1.33.
3) Provide adequate drainage to prevent water ponding.
4) Bearing at joint(s) 1, 6 considers parallel to grain value using ANSI/TPI 1 angle to grain formula. Building designer should verify capacity of bearing surface.
5) Provide mechanical connection (by others) of truss to bearing plate capable of withstanding 129 lb uplift at joint 1 and 129 lb uplift at joint 6.

LOAD CASE(S) Standard

Juan Garcia, FL Lic #58521
MiTek Industries, Inc.
14515 North Outer Forty Drive
Suite 300
Chesterfield, MO, 63017
FL Cert.#6634

November 14,2005

WARNING - Verify design parameters and READ NOTES ON THIS AND REVERSE SIDE BEFORE USE.
Design valid for use only with MiTek connectors. This design is based only upon parameters shown, and is for an individual building component. Applicability of design parameters and proper incorporation of component is responsibility of building designer - not truss designer. Bracing shown is for lateral support of individual web members only. Additional temporary bracing to insure stability during construction is the responsibility of the erector. Additional permanent bracing of the overall structure is the responsibility of the building designer. For general guidance regarding fabrication, quality control, storage, delivery, erection and bracing, consult **ANSI/TPI1 Quality Criteria, DSB-89 and BCSI1 Building Component Safety Information** available from Truss Plate Institute, 583 D'Onofrio Drive, Madison, WI 53719.

14515 N. Outer Forty,
Suite #300
Chesterfield, MO 63017

MiTek®

Symbols

PLATE LOCATION AND ORIENTATION

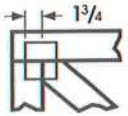

*Center plate on joint unless x,y offsets are indicated. Dimensions are in ft-in-sixteenths. Apply plates to both sides of truss and securely seat.

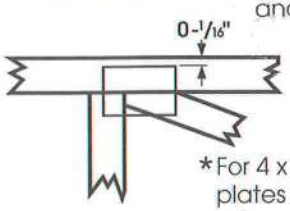

*For 4 x 2 orientation, locate plates 0 - 1/16" from outside edge of truss.

*This symbol indicates the required direction of slots in connector plates.

*** Plate location details available in MiTek 20/20 software or upon request.**

PLATE SIZE

4 x 4 — The first dimension is the width perpendicular to slots. Second dimension is the length parallel to slots.

LATERAL BRACING

Indicated by symbol shown and/or by text in the bracing section of the output. Use T, I or Eliminator bracing if indicated.

BEARING

Indicates location where bearings (supports) occur. Icons vary but reaction section indicates joint number where bearings occur.

Industry Standards:

ANSI/TPI1: National Design Specification for Metal Plate Connected Wood Truss Construction.
DSB-89: Design Standard for Bracing.
BCSI1: Building Component Safety Information, Guide to Good Practice for Handling, Installing & Bracing of Metal Plate Connected Wood Trusses.

Numbering System

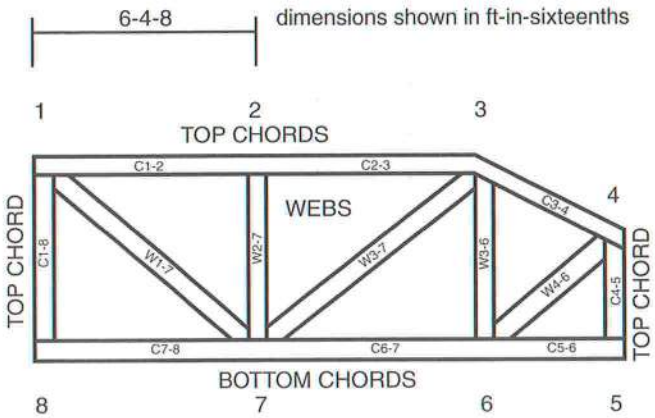

JOINTS ARE GENERALLY NUMBERED/LETTERED CLOCKWISE AROUND THE TRUSS STARTING AT THE JOINT FARTHEST TO THE LEFT.

CHORDS AND WEBS ARE IDENTIFIED BY END JOINT NUMBERS/LETTERS.

CONNECTOR PLATE CODE APPROVALS

BOCA	96-31, 95-43, 96-20-1, 96-67, 84-32
ICBO	4922, 5243, 5363, 3907
SBCCI	9667, 9730, 9604B, 9511, 9432A

MiTek®

TEE-LOK®

⚠General Safety Notes

Failure to Follow Could Cause Property Damage or Personal Injury

1. Additional stability bracing for truss system, e.g. diagonal or X-bracing, is always required. See BCSI1.
2. Never exceed the design loading shown and never stack materials on inadequately braced trusses.
3. Provide copies of this truss design to the building designer, erection supervisor, property owner and all other interested parties.
4. Cut members to bear tightly against each other.
5. Place plates on each face of truss at each joint and embed fully. Knots and wane at joint locations are regulated by ANSI/TPI1.
6. Design assumes trusses will be suitably protected from the environment in accord with ANSI/TPI1.
7. Unless otherwise noted, moisture content of lumber shall not exceed 19% at time of fabrication.
8. Unless expressly noted, this design is not applicable for use with fire retardant or preservative treated lumber.
9. Camber is a non-structural consideration and is the responsibility of truss fabricator. General practice is to camber for dead load deflection.
10. Plate type, size, orientation and location dimensions shown indicate minimum plating requirements.
11. Lumber used shall be of the species and size, and in all respects, equal to or better than that specified.
12. Top chords must be sheathed or purlins provided at spacing shown on design.
13. Bottom chords require lateral bracing at 10 ft. spacing, or less, if no ceiling is installed, unless otherwise noted.
14. Connections not shown are the responsibility of others.
15. Do not cut or alter truss member or plate without prior approval of a professional engineer.
16. Install and load vertically unless indicated otherwise.

© 2004 Mitek®

Job	Truss	Truss Type	Qty	Ply	SIMQUE HOMES
8833	PB3	PIGGYBACK	4	1	I9388145 Job Reference (optional)

Reese Building Components, INC., Sylvester Ga. 6.200 s Oct 18 2005 MiTek Industries, Inc. Fri Nov 11 13:30:51 2005 Page 1

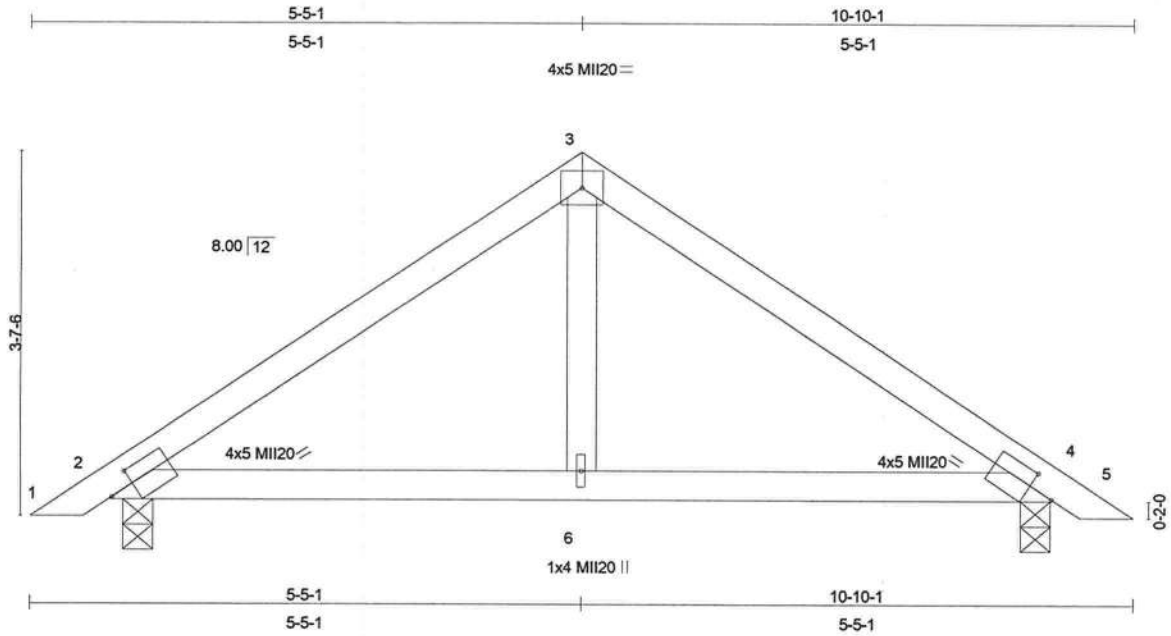

Plate Offsets (X,Y): [2:0-2-15,0-1-12], [4:0-2-15,0-1-12]

LOADING (psf)		SPACING 2-0-0		CSI		DEFL	in	(loc)	l/defl	L/d	PLATES	GRIP
TCLL	20.0	Plates Increase	1.25	TC	0.48	Vert(LL)	0.07	2-6	>999	360	MII20	249/190
TCDL	10.0	Lumber Increase	1.25	BC	0.42	Vert(TL)	-0.09	2-6	>999	240		
BCLL	0.0	Rep Stress Incr	YES	WB	0.07	Horz(TL)	0.06	5	n/a	n/a		
BCDL	10.0	Code FBC2001/ANSI95		(Matrix)							Weight: 37 lb	

LUMBER
TOP CHORD 2 X 4 SYP No.2
BOT CHORD 2 X 4 SYP No.2
WEBS 2 X 4 SYP No.3

BRACING
TOP CHORD Sheathed or 6-0-0 oc purlins.
BOT CHORD Rigid ceiling directly applied or 10-0-0 oc bracing.

REACTIONS (lb/size) 1=424/0-3-8, 5=424/0-3-8
Max Horz 1=148(load case 3)
Max Uplift1=-142(load case 4), 5=-142(load case 5)

This truss design is based upon the building code shown. This code has been specified by the project engineer/architect, or building designer. The applicability of this code in any particular jurisdiction should be confirmed with the building official prior to truss fabrication. This determination is not the responsibility of the component/truss designer.

FORCES (lb) - Maximum Compression/Maximum Tension
TOP CHORD 1-2=-213/135, 2-3=-586/198, 3-4=-586/214, 4-5=-213/80
BOT CHORD 2-6=-117/461, 4-6=-117/461
WEBS 3-6=-12/231

NOTES
1) Unbalanced roof live loads have been considered for this design.
2) Wind: ASCE 7-98; 110mph (3-second gust); h=15ft; TCDL=5.0psf; BCDL=5.0psf; Category II; Exp C; enclosed; MWFRS gable end zone; cantilever left and right exposed ; end vertical left and right exposed; Lumber DOL=1.33 plate grip DOL=1.33.
3) Bearing at joint(s) 1, 5 considers parallel to grain value using ANSI/TPI 1 angle to grain formula. Building designer should verify capacity of bearing surface.
4) Provide mechanical connection (by others) of truss to bearing plate capable of withstanding 142 lb uplift at joint 1 and 142 lb uplift at joint 5.

LOAD CASE(S) Standard

Juan Garcia, FL Lic #58521
MiTek Industries, Inc.
14515 North Outer Forty Drive
Suite 300
Chesterfield, MO, 63017
FL Cert.#6634

November 14,2005

WARNING - Verify design parameters and READ NOTES ON THIS AND REVERSE SIDE BEFORE USE.
Design valid for use only with MiTek connectors. This design is based only upon parameters shown, and is for an individual building component. Applicability of design parameters and proper incorporation of component is responsibility of building designer - not truss designer. Bracing shown is for lateral support of individual web members only. Additional temporary bracing to insure stability during construction is the responsibility of the erector. Additional permanent bracing of the overall structure is the responsibility of the building designer. For general guidance regarding fabrication, quality control, storage, delivery, erection and bracing, consult ANSI/TPI1 Quality Criteria, DSB-89 and BCSI1 Building Component Safety Information available from Truss Plate Institute, 583 D'Onofrio Drive, Madison, WI 53719.

14515 N. Outer Forty,
Suite #300
Chesterfield, MO 63017

MiTek®

Symbols

PLATE LOCATION AND ORIENTATION

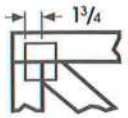

*Center plate on joint unless x,y offsets are indicated. Dimensions are in ft-in-sixteenths. Apply plates to both sides of truss and securely seat.

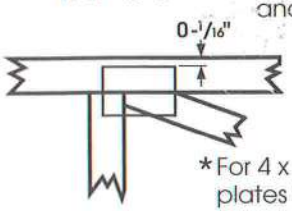

*For 4 x 2 orientation, locate plates 0 - 1/16" from outside edge of truss.

*This symbol indicates the required direction of slots in connector plates.

*** Plate location details available in MiTek 20/20 software or upon request.**

PLATE SIZE

4 x 4 — The first dimension is the width perpendicular to slots. Second dimension is the length parallel to slots.

LATERAL BRACING

Indicated by symbol shown and/or by text in the bracing section of the output. Use T, I or Eliminator bracing if indicated.

BEARING

Indicates location where bearings (supports) occur. Icons vary but reaction section indicates joint number where bearings occur.

Industry Standards:

ANSI/TPI1: National Design Specification for Metal Plate Connected Wood Truss Construction.
DSB-89: Design Standard for Bracing.
BCSI1: Building Component Safety Information, Guide to Good Practice for Handling, Installing & Bracing of Metal Plate Connected Wood Trusses.

Numbering System

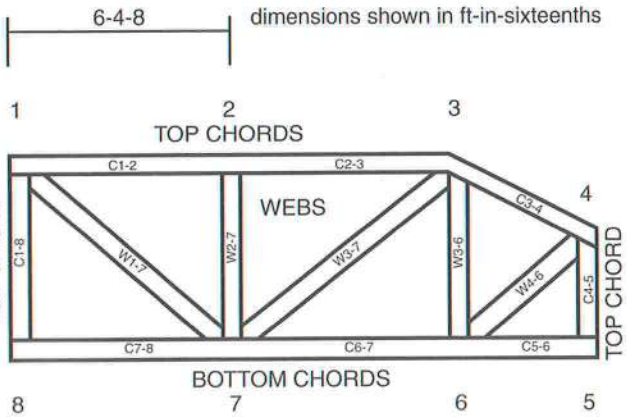

JOINTS ARE GENERALLY NUMBERED/LETTERED CLOCKWISE AROUND THE TRUSS STARTING AT THE JOINT FARTHEST TO THE LEFT.

CHORDS AND WEBS ARE IDENTIFIED BY END JOINT NUMBERS/LETTERS.

CONNECTOR PLATE CODE APPROVALS

BOCA	96-31, 95-43, 96-20-1, 96-67, 84-32
ICBO	4922, 5243, 5363, 3907
SBCCI	9667, 9730, 9604B, 9511, 9432A

MiTek®

TEE-LOK®

⚠General Safety Notes

Failure to Follow Could Cause Property Damage or Personal Injury

1. Additional stability bracing for truss system, e.g. diagonal or X-bracing, is always required. See BCSI1.
2. Never exceed the design loading shown and never stack materials on inadequately braced trusses.
3. Provide copies of this truss design to the building designer, erection supervisor, property owner and all other interested parties.
4. Cut members to bear tightly against each other.
5. Place plates on each face of truss at each joint and embed fully. Knots and wane at joint locations are regulated by ANSI/TPI1.
6. Design assumes trusses will be suitably protected from the environment in accord with ANSI/TPI1.
7. Unless otherwise noted, moisture content of lumber shall not exceed 19% at time of fabrication.
8. Unless expressly noted, this design is not applicable for use with fire retardant or preservative treated lumber.
9. Camber is a non-structural consideration and is the responsibility of truss fabricator. General practice is to camber for dead load deflection.
10. Plate type, size, orientation and location dimensions shown indicate minimum plating requirements.
11. Lumber used shall be of the species and size, and in all respects, equal to or better than that specified.
12. Top chords must be sheathed or purlins provided at spacing shown on design.
13. Bottom chords require lateral bracing at 10 ft. spacing, or less, if no ceiling is installed, unless otherwise noted.
14. Connections not shown are the responsibility of others.
15. Do not cut or alter truss member or plate without prior approval of a professional engineer.
16. Install and load vertically unless indicated otherwise.

© 2004 Mitek®

Job	Truss	Truss Type	Qty	Ply	SIMQUE HOMES
8833	T1	BOSTON HIP	1	2	I9388146 Job Reference (optional)

Reese Building Components, INC., Sylvester Ga.

6.200 s Oct 18 2005 MiTek Industries, Inc. Fri Nov 11 13:30:51 2005 Page 1

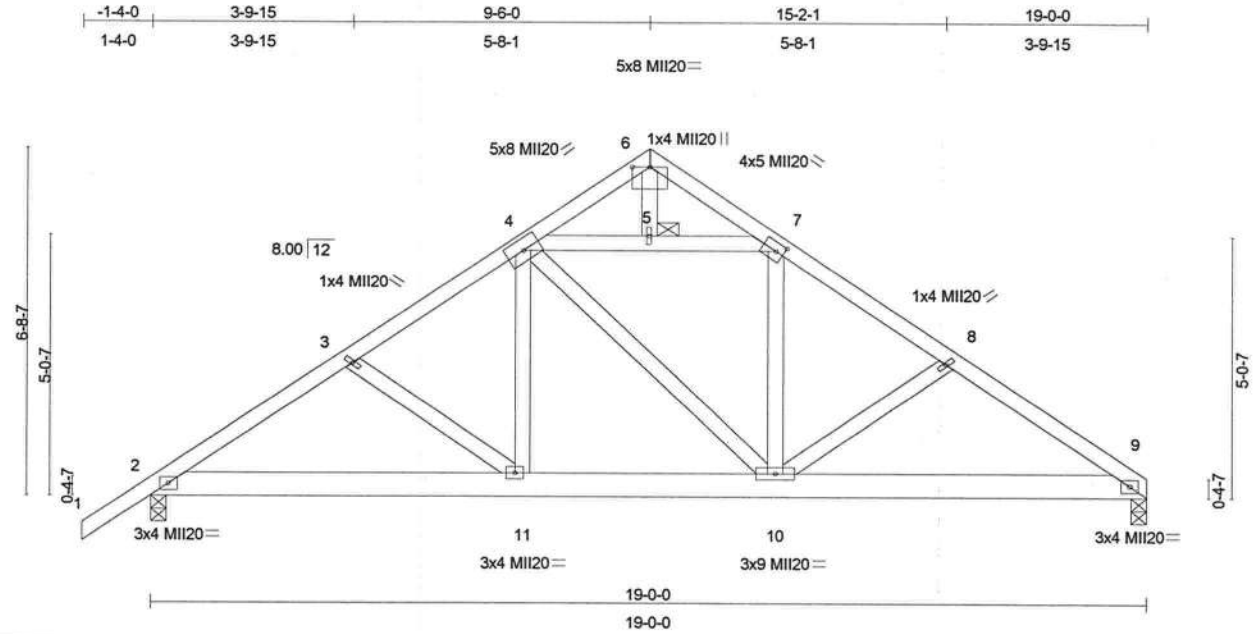

Plate Offsets (X,Y): [6:0-4-0,0-0-1], [7:0-1-12,0-2-0]

LOADING (psf)		SPACING 2-0-0		CSI		DEFL	in	(loc)	l/defl	L/d	PLATES	GRIP
TCLL	20.0	Plates Increase	1.25	TC	0.19	Vert(LL)	0.04	10-11	>999	360	MII20	249/190
TCDL	10.0	Lumber Increase	1.25	BC	0.19	Vert(TL)	-0.05	10-11	>999	240		
BCLL	0.0	Rep Stress Incr	NO	WB	0.12	Horz(TL)	0.02	9	n/a	n/a		
BCDL	10.0	Code FBC2001/ANSI95		(Matrix)							Weight: 248 lb	

LUMBER
TOP CHORD 2 X 4 SYP No.2
BOT CHORD 2 X 6 SYP No.2
WEBS 2 X 4 SYP No.3

BRACING
TOP CHORD Sheathed or 6-0-0 oc purlins.
BOT CHORD Rigid ceiling directly applied or 10-0-0 oc bracing.
JOINTS 1 Brace at Jt(s): 5

REACTIONS (lb/size) 2=1576/0-3-8, 9=1484/0-3-8
Max Horz 2=279(load case 3)
Max Uplift2=-938(load case 4), 9=-828(load case 5)

This truss design is based upon the building code shown. This code has been specified by the project engineer/architect, or building designer. The applicability of this code in any particular jurisdiction should be confirmed with the building official prior to truss fabrication. This determination is not the responsibility of the component/truss designer.

FORCES (lb) - Maximum Compression/Maximum Tension
TOP CHORD 1-2=0/47, 2-3=-2385/1368, 3-4=-2211/1336, 4-6=-456/369, 6-7=-465/351, 7-8=-2231/1343, 8-9=-2404/1390, 4-5=-1504/1025, 5-7=-1502/1024
BOT CHORD 2-11=-1186/1918, 10-11=-1022/1770, 9-10=-1068/1934
WEBS 4-11=-405/778, 7-10=-394/753, 4-10=-205/169, 3-11=-157/187, 8-10=-156/191, 5-6=-78/94

NOTES
1) 2-ply truss to be connected together with 10d Common(.148"x3") Nails as follows:
Top chords connected as follows: 2 X 4 - 1 row at 0-9-0 oc.
Bottom chords connected as follows: 2 X 6 - 2 rows at 0-9-0 oc.
Webs connected as follows: 2 X 4 - 1 row at 0-9-0 oc.
2) All loads are considered equally applied to all plies, except if noted as front (F) or back (B) face in the LOAD CASE(S) section. Ply to ply connections have been provided to distribute only loads noted as (F) or (B), unless otherwise indicated.
3) Unbalanced roof live loads have been considered for this design.
4) Wind: ASCE 7-98; 110mph (3-second gust); h=15ft; TCDL=5.0psf; BCDL=5.0psf; Category II; Exp C; enclosed; MWFRS gable end zone; cantilever left and right exposed ; end vertical left and right exposed; Lumber DOL=1.33 plate grip DOL=1.33.
5) Provide adequate drainage to prevent water ponding.
6) Provide mechanical connection (by others) of truss to bearing plate capable of withstanding 938 lb uplift at joint 2 and 828 lb uplift at joint 9.
7) Girder carries hip end with 7-0-0 end setback.
8) Design assumes 4x2 (flat orientation) purlins at oc spacing indicated, fastened to truss TC w/ 2-10d nails.
9) Hanger(s) or other connection device(s) shall be provided sufficient to support concentrated load(s) 513 lb down and 403 lb up at 12-0-0, and 513 lb down and 403 lb up at 7-0-0 on bottom chord. The design/selection of such connection device(s) is the responsibility of others.

LOAD CASE(S) Standard

Continued on page 2

Juan Garcia, FL Lic #58521
MiTek Industries, Inc.
14515 North Outer Forty Drive
Suite 300
Chesterfield, MO, 63017
FL Cert.#6634

November 14,2005

WARNING - Verify design parameters and READ NOTES ON THIS AND REVERSE SIDE BEFORE USE.
Design valid for use only with MiTek connectors. This design is based only upon parameters shown, and is for an individual building component. Applicability of design parameters and proper incorporation of component is responsibility of building designer - not truss designer. Bracing shown is for lateral support of individual web members only. Additional temporary bracing to insure stability during construction is the responsibility of the erector. Additional permanent bracing of the overall structure is the responsibility of the building designer. For general guidance regarding fabrication, quality control, storage, delivery, erection and bracing, consult ANSI/TPI1 Quality Criteria, DSB-89 and BCSI1 Building Component Safety Information available from Truss Plate Institute, 583 D'Onofrio Drive, Madison, WI 53719.

14515 N. Outer Forty,
Suite #300
Chesterfield, MO 63017

MiTek®

Symbols

PLATE LOCATION AND ORIENTATION

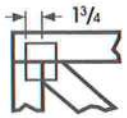

*Center plate on joint unless x,y offsets are indicated. Dimensions are in ft-in-sixteenths. Apply plates to both sides of truss and securely seat.

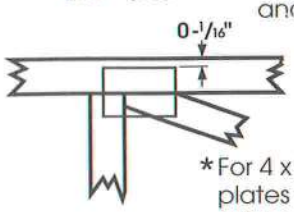

*For 4 x 2 orientation, locate plates 0 - 1/16" from outside edge of truss.

*This symbol indicates the required direction of slots in connector plates.

*** Plate location details available in MiTek 20/20 software or upon request.**

PLATE SIZE

4 x 4 — The first dimension is the width perpendicular to slots. Second dimension is the length parallel to slots.

LATERAL BRACING

Indicated by symbol shown and/or by text in the bracing section of the output. Use T, I or Eliminator bracing if indicated.

BEARING

Indicates location where bearings (supports) occur. Icons vary but reaction section indicates joint number where bearings occur.

Industry Standards:

ANSI/TPI1: National Design Specification for Metal Plate Connected Wood Truss Construction.
DSB-89: Design Standard for Bracing.
BCSI1: Building Component Safety Information, Guide to Good Practice for Handling, Installing & Bracing of Metal Plate Connected Wood Trusses.

Numbering System

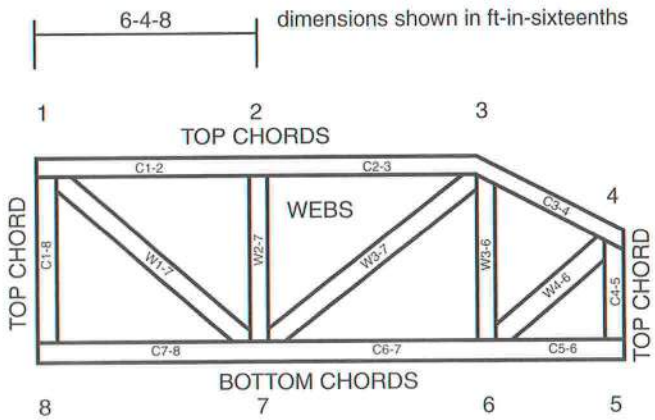

JOINTS ARE GENERALLY NUMBERED/LETTERED CLOCKWISE AROUND THE TRUSS STARTING AT THE JOINT FARTHEST TO THE LEFT.

CHORDS AND WEBS ARE IDENTIFIED BY END JOINT NUMBERS/LETTERS.

CONNECTOR PLATE CODE APPROVALS

BOCA	96-31, 95-43, 96-20-1, 96-67, 84-32
ICBO	4922, 5243, 5363, 3907
SBCCI	9667, 9730, 9604B, 9511, 9432A

MiTek®

TEE-LOK®

⚠General Safety Notes

Failure to Follow Could Cause Property Damage or Personal Injury

1. Additional stability bracing for truss system, e.g. diagonal or X-bracing, is always required. See BCSI1.
2. Never exceed the design loading shown and never stack materials on inadequately braced trusses.
3. Provide copies of this truss design to the building designer, erection supervisor, property owner and all other interested parties.
4. Cut members to bear tightly against each other.
5. Place plates on each face of truss at each joint and embed fully. Knots and wane at joint locations are regulated by ANSI/TPI1.
6. Design assumes trusses will be suitably protected from the environment in accord with ANSI/TPI1.
7. Unless otherwise noted, moisture content of lumber shall not exceed 19% at time of fabrication.
8. Unless expressly noted, this design is not applicable for use with fire retardant or preservative treated lumber.
9. Camber is a non-structural consideration and is the responsibility of truss fabricator. General practice is to camber for dead load deflection.
10. Plate type, size, orientation and location dimensions shown indicate minimum plating requirements.
11. Lumber used shall be of the species and size, and in all respects, equal to or better than that specified.
12. Top chords must be sheathed or purlins provided at spacing shown on design.
13. Bottom chords require lateral bracing at 10 ft. spacing, or less, if no ceiling is installed, unless otherwise noted.
14. Connections not shown are the responsibility of others.
15. Do not cut or alter truss member or plate without prior approval of a professional engineer.
16. Install and load vertically unless indicated otherwise.

© 2004 Mitek®

LOAD CASE(S) Standard

1) Regular: Lumber Increase=1.25, Plate Increase=1.25

Uniform Loads (plf)

Vert: 2-11=-20, 10-11=-44(F=-24), 9-10=-20, 1-4=-60, 4-6=-131(F=-71), 6-7=-131(F=-71), 7-9=-60

Concentrated Loads (lb)

Vert: 11=-513(F) 10=-513(F)

WARNING - Verify design parameters and READ NOTES ON THIS AND REVERSE SIDE BEFORE USE.

Design valid for use only with MiTek connectors. This design is based only upon parameters shown, and is for an individual building component. Applicability of design parameters and proper incorporation of component is responsibility of building designer - not truss designer. Bracing shown is for lateral support of individual web members only. Additional temporary bracing to insure stability during construction is the responsibility of the erector. Additional permanent bracing of the overall structure is the responsibility of the building designer. For general guidance regarding fabrication, quality control, storage, delivery, erection and bracing, consult **ANSI/TPI1 Quality Criteria, DSB-89 and BCSI1 Building Component Safety Information** available from Truss Plate Institute, 583 D'Onofrio Drive, Madison, WI 53719.

14515 N. Outer Forty,
Suite #300
Chesterfield, MO 63017

MiTek®

Symbols

PLATE LOCATION AND ORIENTATION

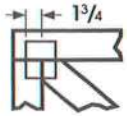

*Center plate on joint unless x,y offsets are indicated. Dimensions are in ft-in-sixteenths. Apply plates to both sides of truss and securely seat.

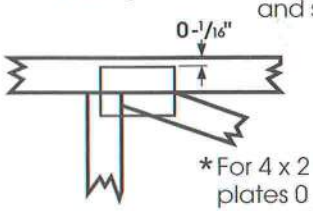

*For 4 x 2 orientation, locate plates 0 - 1/16" from outside edge of truss.

*This symbol indicates the required direction of slots in connector plates.

*** Plate location details available in MiTek 20/20 software or upon request.**

PLATE SIZE

4 x 4 — The first dimension is the width perpendicular to slots. Second dimension is the length parallel to slots.

LATERAL BRACING

Indicated by symbol shown and/or by text in the bracing section of the output. Use T, I or Eliminator bracing if indicated.

BEARING

Indicates location where bearings (supports) occur. Icons vary but reaction section indicates joint number where bearings occur.

Industry Standards:

ANSI/TPI1: National Design Specification for Metal Plate Connected Wood Truss Construction.
DSB-89: Design Standard for Bracing.
BCSI1: Building Component Safety Information, Guide to Good Practice for Handling, Installing & Bracing of Metal Plate Connected Wood Trusses.

Numbering System

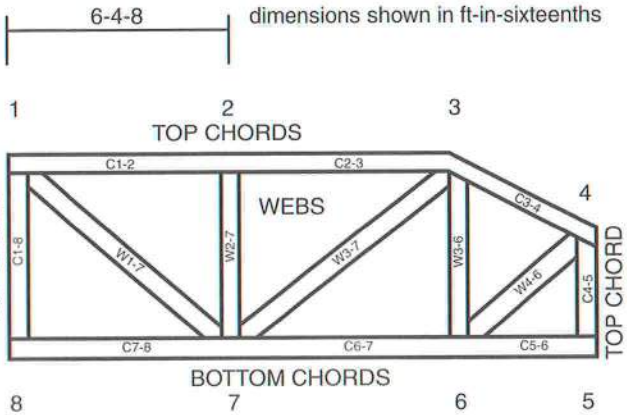

JOINTS ARE GENERALLY NUMBERED/LETTERED CLOCKWISE AROUND THE TRUSS STARTING AT THE JOINT FARTHEST TO THE LEFT.

CHORDS AND WEBS ARE IDENTIFIED BY END JOINT NUMBERS/LETTERS.

CONNECTOR PLATE CODE APPROVALS

BOCA	96-31, 95-43, 96-20-1, 96-67, 84-32
ICBO	4922, 5243, 5363, 3907
SBCCI	9667, 9730, 9604B, 9511, 9432A

MiTek®

TEE-LOK®

⚠General Safety Notes

Failure to Follow Could Cause Property Damage or Personal Injury

1. Additional stability bracing for truss system, e.g. diagonal or X-bracing, is always required. See BCSI1.
2. Never exceed the design loading shown and never stack materials on inadequately braced trusses.
3. Provide copies of this truss design to the building designer, erection supervisor, property owner and all other interested parties.
4. Cut members to bear tightly against each other.
5. Place plates on each face of truss at each joint and embed fully. Knots and wane at joint locations are regulated by ANSI/TPI1.
6. Design assumes trusses will be suitably protected from the environment in accord with ANSI/TPI1.
7. Unless otherwise noted, moisture content of lumber shall not exceed 19% at time of fabrication.
8. Unless expressly noted, this design is not applicable for use with fire retardant or preservative treated lumber.
9. Camber is a non-structural consideration and is the responsibility of truss fabricator. General practice is to camber for dead load deflection.
10. Plate type, size, orientation and location dimensions shown indicate minimum plating requirements.
11. Lumber used shall be of the species and size, and in all respects, equal to or better than that specified.
12. Top chords must be sheathed or purlins provided at spacing shown on design.
13. Bottom chords require lateral bracing at 10 ft. spacing, or less, if no ceiling is installed, unless otherwise noted.
14. Connections not shown are the responsibility of others.
15. Do not cut or alter truss member or plate without prior approval of a professional engineer.
16. Install and load vertically unless indicated otherwise.

© 2004 Mitek®

Job	Truss	Truss Type	Qty	Ply	SIMQUE HOMES
8833	T2	ROOF TRUSS	3	1	I9388147 Job Reference (optional)

Reese Building Components, INC., Sylvester Ga. 6.200 s Oct 18 2005 MiTek Industries, Inc. Fri Nov 11 13:30:52 2005 Page 1

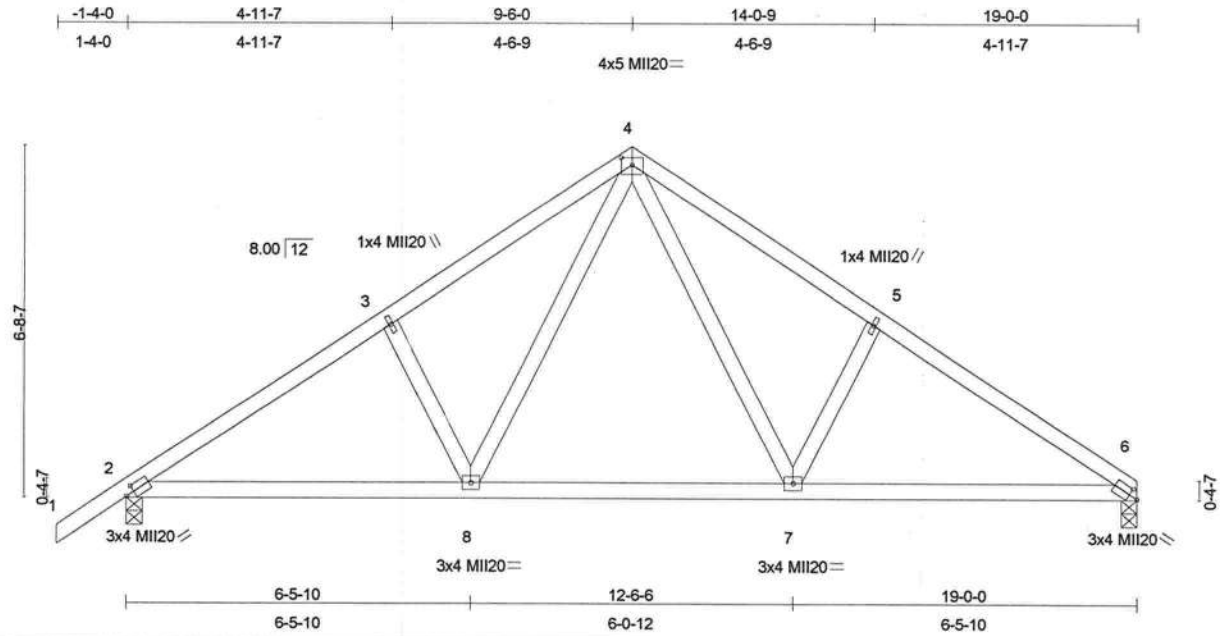

Plate Offsets (X,Y): [2:0-1-15,0-1-8], [4:0-2-8,0-1-12], [6:0-1-15,0-1-8]

LOADING (psf)		SPACING 2-0-0		CSI		DEFL	in	(loc)	l/defl	L/d	PLATES	GRIP
TCLL	20.0	Plates Increase	1.25	TC	0.25	Vert(LL)	0.04	6-7	>999	360	MII20	249/190
TCDL	10.0	Lumber Increase	1.25	BC	0.29	Vert(TL)	-0.08	6-7	>999	240		
BCLL	0.0	Rep Stress Incr	YES	WB	0.21	Horz(TL)	0.02	6	n/a	n/a		
BCDL	10.0	Code FBC2001/ANSI95		(Matrix)							Weight: 95 lb	

LUMBER
TOP CHORD 2 X 4 SYP No.2
BOT CHORD 2 X 4 SYP No.2
WEBS 2 X 4 SYP No.3

BRACING
TOP CHORD Sheathed or 5-11-7 oc purlins.
BOT CHORD Rigid ceiling directly applied or 10-0-0 oc bracing.

This truss design is based upon the building code shown. This code has been specified by the project engineer/architect, or building designer. The applicability of this code in any particular jurisdiction should be confirmed with the building official prior to truss fabrication. This determination is not the responsibility of the component/truss designer.

REACTIONS (lb/size) 6=745/0-3-8, 2=841/0-3-8
Max Horz 2=292(load case 3)
Max Uplift6=-252(load case 5), 2=-359(load case 4)

FORCES (lb) - Maximum Compression/Maximum Tension
TOP CHORD 1-2=0/44, 2-3=-1066/329, 3-4=-938/397, 4-5=-949/422, 5-6=-1060/351
BOT CHORD 2-8=-320/814, 7-8=-109/556, 6-7=-195/826
WEBS 3-8=-241/280, 4-8=-209/387, 4-7=-239/406, 5-7=-250/295

NOTES
1) Unbalanced roof live loads have been considered for this design.
2) Wind: ASCE 7-98; 110mph (3-second gust); h=15ft; TCDL=5.0psf; BCDL=5.0psf; Category II; Exp C; enclosed; MWFRS gable end zone; cantilever left and right exposed ; end vertical left and right exposed; Lumber DOL=1.33 plate grip DOL=1.33.
3) Provide mechanical connection (by others) of truss to bearing plate capable of withstanding 252 lb uplift at joint 6 and 359 lb uplift at joint 2.

LOAD CASE(S) Standard

Juan Garcia, FL Lic #58521
MiTek Industries, Inc.
14515 North Outer Forty Drive
Suite 300
Chesterfield, MO, 63017
FL Cert.#6634

November 14,2005

WARNING - Verify design parameters and READ NOTES ON THIS AND REVERSE SIDE BEFORE USE.
Design valid for use only with MiTek connectors. This design is based only upon parameters shown, and is for an individual building component. Applicability of design parameters and proper incorporation of component is responsibility of building designer - not truss designer. Bracing shown is for lateral support of individual web members only. Additional temporary bracing to insure stability during construction is the responsibility of the erector. Additional permanent bracing of the overall structure is the responsibility of the building designer. For general guidance regarding fabrication, quality control, storage, delivery, erection and bracing, consult ANSI/TPI1 Quality Criteria, DSB-89 and BCSI1 Building Component Safety Information available from Truss Plate Institute, 583 D'Onofrio Drive, Madison, WI 53719.

14515 N. Outer Forty,
Suite #300
Chesterfield, MO 63017

MiTek®

Symbols

PLATE LOCATION AND ORIENTATION

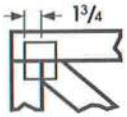

*Center plate on joint unless x,y offsets are indicated. Dimensions are in ft-in-sixteenths. Apply plates to both sides of truss and securely seat.

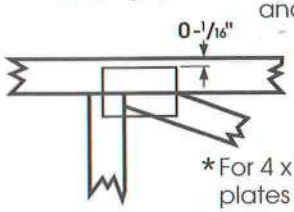

*For 4 x 2 orientation, locate plates 0 - 1/16" from outside edge of truss.

*This symbol indicates the required direction of slots in connector plates.

*** Plate location details available in MiTek 20/20 software or upon request.**

PLATE SIZE

4 x 4 — The first dimension is the width perpendicular to slots. Second dimension is the length parallel to slots.

LATERAL BRACING

Indicated by symbol shown and/or by text in the bracing section of the output. Use T, I or Eliminator bracing if indicated.

BEARING

Indicates location where bearings (supports) occur. Icons vary but reaction section indicates joint number where bearings occur.

Industry Standards:

ANSI/TPI1: National Design Specification for Metal Plate Connected Wood Truss Construction.
DSB-89: Design Standard for Bracing.
BCSI1: Building Component Safety Information, Guide to Good Practice for Handling, Installing & Bracing of Metal Plate Connected Wood Trusses.

Numbering System

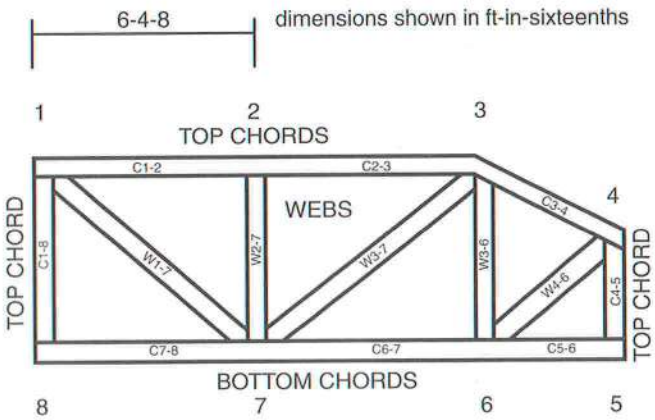

JOINTS ARE GENERALLY NUMBERED/LETTERED CLOCKWISE AROUND THE TRUSS STARTING AT THE JOINT FARTHEST TO THE LEFT.

CHORDS AND WEBS ARE IDENTIFIED BY END JOINT NUMBERS/LETTERS.

CONNECTOR PLATE CODE APPROVALS

BOCA	96-31, 95-43, 96-20-1, 96-67, 84-32
ICBO	4922, 5243, 5363, 3907
SBCCI	9667, 9730, 9604B, 9511, 9432A

MiTek®

TEE-LOK®

⚠General Safety Notes

Failure to Follow Could Cause Property Damage or Personal Injury

1. Additional stability bracing for truss system, e.g. diagonal or X-bracing, is always required. See BCSI1.
2. Never exceed the design loading shown and never stack materials on inadequately braced trusses.
3. Provide copies of this truss design to the building designer, erection supervisor, property owner and all other interested parties.
4. Cut members to bear tightly against each other.
5. Place plates on each face of truss at each joint and embed fully. Knots and wane at joint locations are regulated by ANSI/TPI1.
6. Design assumes trusses will be suitably protected from the environment in accord with ANSI/TPI1.
7. Unless otherwise noted, moisture content of lumber shall not exceed 19% at time of fabrication.
8. Unless expressly noted, this design is not applicable for use with fire retardant or preservative treated lumber.
9. Camber is a non-structural consideration and is the responsibility of truss fabricator. General practice is to camber for dead load deflection.
10. Plate type, size, orientation and location dimensions shown indicate minimum plating requirements.
11. Lumber used shall be of the species and size, and in all respects, equal to or better than that specified.
12. Top chords must be sheathed or purlins provided at spacing shown on design.
13. Bottom chords require lateral bracing at 10 ft. spacing, or less, if no ceiling is installed, unless otherwise noted.
14. Connections not shown are the responsibility of others.
15. Do not cut or alter truss member or plate without prior approval of a professional engineer.
16. Install and load vertically unless indicated otherwise.

© 2004 Mitek®

Job	Truss	Truss Type	Qty	Ply	SIMQUE HOMES
8833	T3	ROOF TRUSS	3	1	I9388148 Job Reference (optional)

Reese Building Components, INC., Sylvester Ga. 6.200 s Oct 18 2005 MiTek Industries, Inc. Fri Nov 11 13:30:52 2005 Page 1

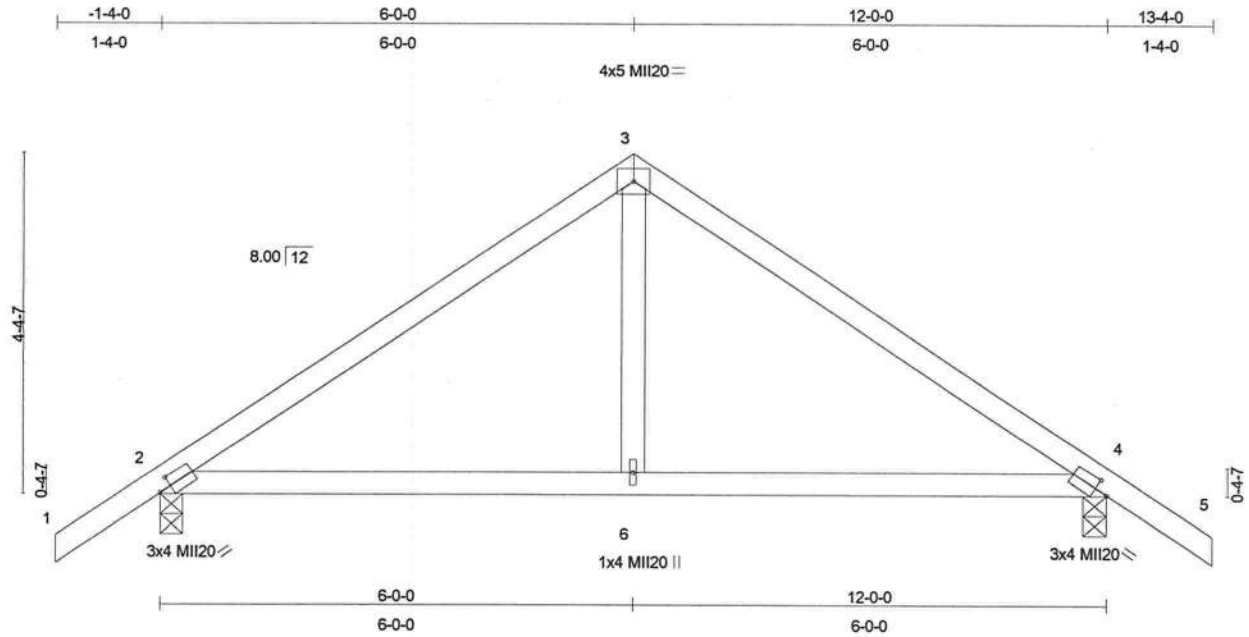

Plate Offsets (X,Y): [2:0-1-15,0-1-8], [4:0-1-15,0-1-8]

LOADING (psf)		SPACING 2-0-0		CSI		DEFL	in	(loc)	l/defl	L/d	PLATES	GRIP
TCLL	20.0	Plates Increase	1.25	TC	0.32	Vert(LL)	0.04	2-6	>999	360	MII20	249/190
TCDL	10.0	Lumber Increase	1.25	BC	0.25	Vert(TL)	-0.05	2-6	>999	240		
BCLL	0.0	Rep Stress Incr	YES	WB	0.05	Horz(TL)	0.01	4	n/a	n/a		
BCDL	10.0	Code FBC2001/ANSI95		(Matrix)							Weight: 50 lb	

LUMBER
TOP CHORD 2 X 4 SYP No.2
BOT CHORD 2 X 4 SYP No.2
WEBS 2 X 4 SYP No.3

BRACING
TOP CHORD Sheathed or 6-0-0 oc purlins.
BOT CHORD Rigid ceiling directly applied or 10-0-0 oc bracing.

REACTIONS (lb/size) 2=557/0-3-8, 4=557/0-3-8
Max Horz 2=-176(load case 2)
Max Uplift2=-265(load case 4), 4=-265(load case 5)

This truss design is based upon the building code shown. This code has been specified by the project engineer/architect, or building designer. The applicability of this code in any particular jurisdiction should be confirmed with the building official prior to truss fabrication. This determination is not the responsibility of the component/truss designer.

FORCES (lb) - Maximum Compression/Maximum Tension
TOP CHORD 1-2=0/44, 2-3=-571/188, 3-4=-571/187, 4-5=0/44
BOT CHORD 2-6=-65/396, 4-6=-65/396
WEBS 3-6=0/160

NOTES
1) Unbalanced roof live loads have been considered for this design.
2) Wind: ASCE 7-98; 110mph (3-second gust); h=15ft; TCDL=5.0psf; BCDL=5.0psf; Category II; Exp C; enclosed; MWFRS gable end zone; cantilever left and right exposed ; end vertical left and right exposed; Lumber DOL=1.33 plate grip DOL=1.33.
3) Provide mechanical connection (by others) of truss to bearing plate capable of withstanding 265 lb uplift at joint 2 and 265 lb uplift at joint 4.

LOAD CASE(S) Standard

Juan Garcia, FL Lic #58521
MiTek Industries, Inc.
14515 North Outer Forty Drive
Suite 300
Chesterfield, MO, 63017
FL Cert.#6634

November 14,2005

WARNING - Verify design parameters and READ NOTES ON THIS AND REVERSE SIDE BEFORE USE.
Design valid for use only with MiTek connectors. This design is based only upon parameters shown, and is for an individual building component. Applicability of design parameters and proper incorporation of component is responsibility of building designer - not truss designer. Bracing shown is for lateral support of individual web members only. Additional temporary bracing to insure stability during construction is the responsibility of the erector. Additional permanent bracing of the overall structure is the responsibility of the building designer. For general guidance regarding fabrication, quality control, storage, delivery, erection and bracing, consult ANSI/TPI1 Quality Criteria, DSB-89 and BCSI1 Building Component Safety Information available from Truss Plate Institute, 583 D'Onofrio Drive, Madison, WI 53719.

14515 N. Outer Forty,
Suite #300
Chesterfield, MO 63017

MiTek®

Symbols

PLATE LOCATION AND ORIENTATION

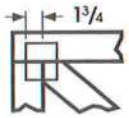

*Center plate on joint unless x,y offsets are indicated. Dimensions are in ft-in-sixteenths. Apply plates to both sides of truss and securely seat.

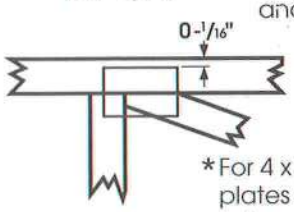

*For 4 x 2 orientation, locate plates 0 - 1/16" from outside edge of truss.

*This symbol indicates the required direction of slots in connector plates.

*** Plate location details available in MiTek 20/20 software or upon request.**

PLATE SIZE

4 x 4 — The first dimension is the width perpendicular to slots. Second dimension is the length parallel to slots.

LATERAL BRACING

Indicated by symbol shown and/or by text in the bracing section of the output. Use T, I or Eliminator bracing if indicated.

BEARING

Indicates location where bearings (supports) occur. Icons vary but reaction section indicates joint number where bearings occur.

Industry Standards:

ANSI/TPI1: National Design Specification for Metal Plate Connected Wood Truss Construction.
DSB-89: Design Standard for Bracing.
BCSI1: Building Component Safety Information, Guide to Good Practice for Handling, Installing & Bracing of Metal Plate Connected Wood Trusses.

Numbering System

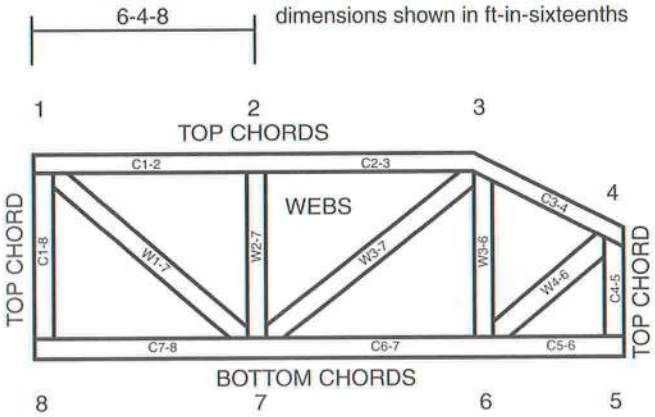

JOINTS ARE GENERALLY NUMBERED/LETTERED CLOCKWISE AROUND THE TRUSS STARTING AT THE JOINT FARTHEST TO THE LEFT.

CHORDS AND WEBS ARE IDENTIFIED BY END JOINT NUMBERS/LETTERS.

CONNECTOR PLATE CODE APPROVALS

BOCA	96-31, 95-43, 96-20-1, 96-67, 84-32
ICBO	4922, 5243, 5363, 3907
SBCCI	9667, 9730, 9604B, 9511, 9432A

MiTek®

TEE-LOK®

⚠General Safety Notes

Failure to Follow Could Cause Property Damage or Personal Injury

1. Additional stability bracing for truss system, e.g. diagonal or X-bracing, is always required. See BCSI1.
2. Never exceed the design loading shown and never stack materials on inadequately braced trusses.
3. Provide copies of this truss design to the building designer, erection supervisor, property owner and all other interested parties.
4. Cut members to bear tightly against each other.
5. Place plates on each face of truss at each joint and embed fully. Knots and wane at joint locations are regulated by ANSI/TPI1.
6. Design assumes trusses will be suitably protected from the environment in accord with ANSI/TPI1.
7. Unless otherwise noted, moisture content of lumber shall not exceed 19% at time of fabrication.
8. Unless expressly noted, this design is not applicable for use with fire retardant or preservative treated lumber.
9. Camber is a non-structural consideration and is the responsibility of truss fabricator. General practice is to camber for dead load deflection.
10. Plate type, size, orientation and location dimensions shown indicate minimum plating requirements.
11. Lumber used shall be of the species and size, and in all respects, equal to or better than that specified.
12. Top chords must be sheathed or purlins provided at spacing shown on design.
13. Bottom chords require lateral bracing at 10 ft. spacing, or less, if no ceiling is installed, unless otherwise noted.
14. Connections not shown are the responsibility of others.
15. Do not cut or alter truss member or plate without prior approval of a professional engineer.
16. Install and load vertically unless indicated otherwise.

© 2004 Mitek®

Job	Truss	Truss Type	Qty	Ply	SIMQUE HOMES
8833	T4	ROOF TRUSS	3	1	I9388149 Job Reference (optional)

Reese Building Components, INC., Sylvester Ga.

6.200 s Oct 18 2005 MiTek Industries, Inc. Fri Nov 11 13:30:53 2005 Page 1

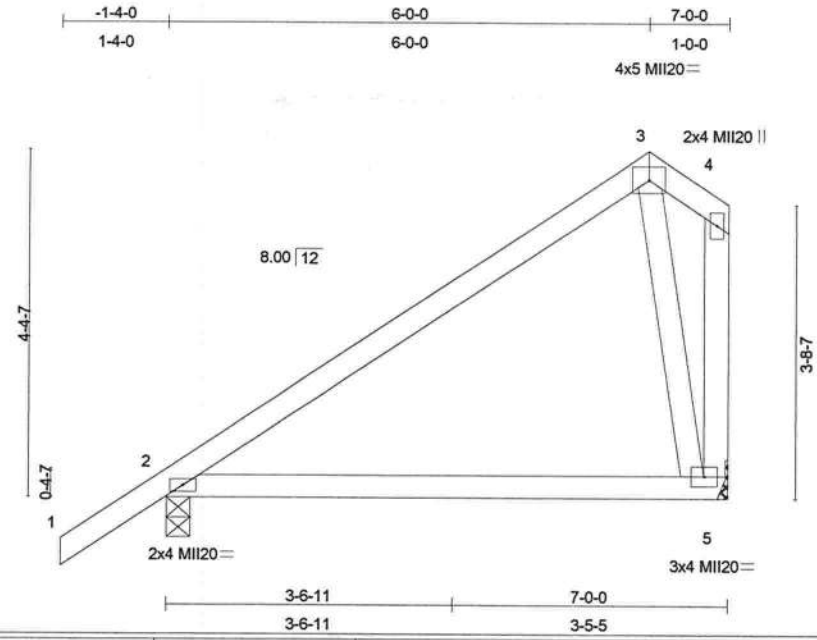

LOADING (psf)		SPACING	2-0-0	CSI		DEFL	in	(loc)	l/defl	L/d	PLATES	GRIP
TCLL	20.0	Plates Increase	1.25	TC	0.45	Vert(LL)	0.00	2	****	360	MII20	249/190
TCDL	10.0	Lumber Increase	1.25	BC	0.21	Vert(TL)	-0.11	2-5	>757	240		
BCLL	0.0	Rep Stress Incr	YES	WB	0.05	Horz(TL)	0.00	5	n/a	n/a		
BCDL	10.0	Code FBC2001/ANSI95		(Matrix)							Weight: 36 lb	

LUMBER
TOP CHORD 2 X 4 SYP No.2
BOT CHORD 2 X 4 SYP No.2
WEBS 2 X 4 SYP No.3

BRACING
TOP CHORD Sheathed or 6-0-0 oc purlins, except end verticals.
BOT CHORD Rigid ceiling directly applied or 10-0-0 oc bracing.

REACTIONS (lb/size) 2=367/0-3-8, 5=259/Mechanical
Max Horz 2=271(load case 3)
Max Uplift2=-204(load case 4), 5=-117(load case 4)

This truss design is based upon the building code shown. This code has been specified by the project engineer/architect, or building designer. The applicability of this code in any particular jurisdiction should be confirmed with the building official prior to truss fabrication. This determination is not the responsibility of the component/truss designer.

FORCES (lb) - Maximum Compression/Maximum Tension
TOP CHORD 1-2=0/44, 2-3=-149/94, 3-4=-60/87, 4-5=-38/64
BOT CHORD 2-5=-81/87
WEBS 3-5=-169/167

NOTES
1) Unbalanced roof live loads have been considered for this design.
2) Wind: ASCE 7-98; 110mph (3-second gust); h=15ft; TCDL=5.0psf; BCDL=5.0psf; Category II; Exp C; enclosed; MWFRS gable end zone; cantilever left and right exposed ; end vertical left and right exposed; Lumber DOL=1.33 plate grip DOL=1.33.
3) Refer to girder(s) for truss to truss connections.
4) Provide mechanical connection (by others) of truss to bearing plate capable of withstanding 204 lb uplift at joint 2 and 117 lb uplift at joint 5.

LOAD CASE(S) Standard

Juan Garcia, FL Lic #58521
MiTek Industries, Inc.
14515 North Outer Forty Drive
Suite 300
Chesterfield, MO, 63017
FL Cert.#6634

November 14,2005

WARNING - Verify design parameters and READ NOTES ON THIS AND REVERSE SIDE BEFORE USE.
Design valid for use only with MiTek connectors. This design is based only upon parameters shown, and is for an individual building component. Applicability of design parameters and proper incorporation of component is responsibility of building designer - not truss designer. Bracing shown is for lateral support of individual web members only. Additional temporary bracing to insure stability during construction is the responsibility of the erector. Additional permanent bracing of the overall structure is the responsibility of the building designer. For general guidance regarding fabrication, quality control, storage, delivery, erection and bracing, consult ANSI/TPI1 Quality Criteria, DSB-89 and BCSI1 Building Component Safety Information available from Truss Plate Institute, 583 D'Onofrio Drive, Madison, WI 53719.

14515 N. Outer Forty,
Suite #300
Chesterfield, MO 63017

MiTek®

Symbols

PLATE LOCATION AND ORIENTATION

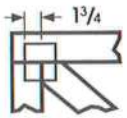

*Center plate on joint unless x,y offsets are indicated. Dimensions are in ft-in-sixteenths. Apply plates to both sides of truss and securely seat.

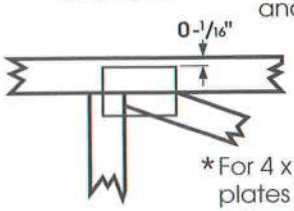

*For 4 x 2 orientation, locate plates 0 - 1/16" from outside edge of truss.

*This symbol indicates the required direction of slots in connector plates.

*** Plate location details available in MiTek 20/20 software or upon request.**

PLATE SIZE

4 x 4 — The first dimension is the width perpendicular to slots. Second dimension is the length parallel to slots.

LATERAL BRACING

Indicated by symbol shown and/or by text in the bracing section of the output. Use T, I or Eliminator bracing if indicated.

BEARING

Indicates location where bearings (supports) occur. Icons vary but reaction section indicates joint number where bearings occur.

Industry Standards:

ANSI/TPI1: National Design Specification for Metal Plate Connected Wood Truss Construction.
DSB-89: Design Standard for Bracing.
BCSI1: Building Component Safety Information, Guide to Good Practice for Handling, Installing & Bracing of Metal Plate Connected Wood Trusses.

Numbering System

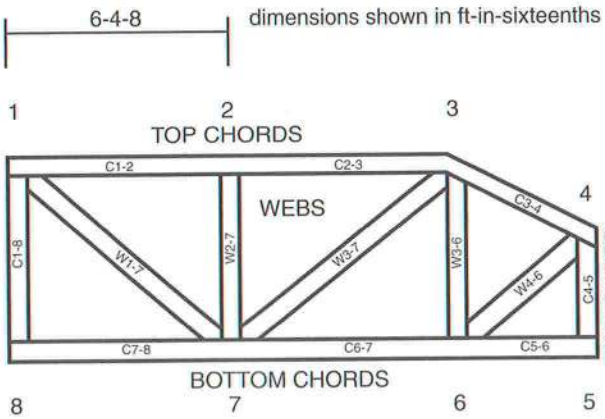

JOINTS ARE GENERALLY NUMBERED/LETTERED CLOCKWISE AROUND THE TRUSS STARTING AT THE JOINT FARTHEST TO THE LEFT.

CHORDS AND WEBS ARE IDENTIFIED BY END JOINT NUMBERS/LETTERS.

CONNECTOR PLATE CODE APPROVALS

BOCA	96-31, 95-43, 96-20-1, 96-67, 84-32
ICBO	4922, 5243, 5363, 3907
SBCCI	9667, 9730, 9604B, 9511, 9432A

MiTek®

TEE-LOK®

⚠General Safety Notes

Failure to Follow Could Cause Property Damage or Personal Injury

1. Additional stability bracing for truss system, e.g. diagonal or X-bracing, is always required. See BCSI1.
2. Never exceed the design loading shown and never stack materials on inadequately braced trusses.
3. Provide copies of this truss design to the building designer, erection supervisor, property owner and all other interested parties.
4. Cut members to bear tightly against each other.
5. Place plates on each face of truss at each joint and embed fully. Knots and wane at joint locations are regulated by ANSI/TPI1.
6. Design assumes trusses will be suitably protected from the environment in accord with ANSI/TPI1.
7. Unless otherwise noted, moisture content of lumber shall not exceed 19% at time of fabrication.
8. Unless expressly noted, this design is not applicable for use with fire retardant or preservative treated lumber.
9. Camber is a non-structural consideration and is the responsibility of truss fabricator. General practice is to camber for dead load deflection.
10. Plate type, size, orientation and location dimensions shown indicate minimum plating requirements.
11. Lumber used shall be of the species and size, and in all respects, equal to or better than that specified.
12. Top chords must be sheathed or purlins provided at spacing shown on design.
13. Bottom chords require lateral bracing at 10 ft. spacing, or less, if no ceiling is installed, unless otherwise noted.
14. Connections not shown are the responsibility of others.
15. Do not cut or alter truss member or plate without prior approval of a professional engineer.
16. Install and load vertically unless indicated otherwise.

© 2004 Mitek®

#23952

MiTek Industries, Inc.
14515 North Outer Forty Drive
Suite 300
Chesterfield, MO 63017-5746
Telephone 314/434-1200
Fax 314/434-5343

Re: 8833
0 0

The truss drawing(s) referenced below have been prepared by MiTek Industries, Inc. under my direct supervision based on the parameters provided by Reese Building Components, Inc.

Pages or sheets covered by this seal: I10050158 thru I10050188

My license renewal date for the state of Florida is February 28, 2007.

Scott W. Miller, FL Lic #58316
MiTek Industries, Inc.
14515 North Outer Forty Drive
Suite 300
Chesterfield, MO, 63017
FL Cert.#6634

March 23,2006

Miller, Scott

The seal on these drawings indicate acceptance of professional engineering responsibility solely for the truss components shown. The suitability and use of this component for any particular building is the responsibility of the building designer, per ANSI/TPI-1995 Sec. 2.

Job	Truss	Truss Type	Qty	Ply	0 0
8833	CJ7	ROOF TRUSS	2	1	I10050158 Job Reference (optional)

Reese Building Components, Inc., Sylvester Ga. 6.200 s Oct 18 2005 MiTek Industries, Inc. Wed Mar 22 15:38:24 2006 Page 1

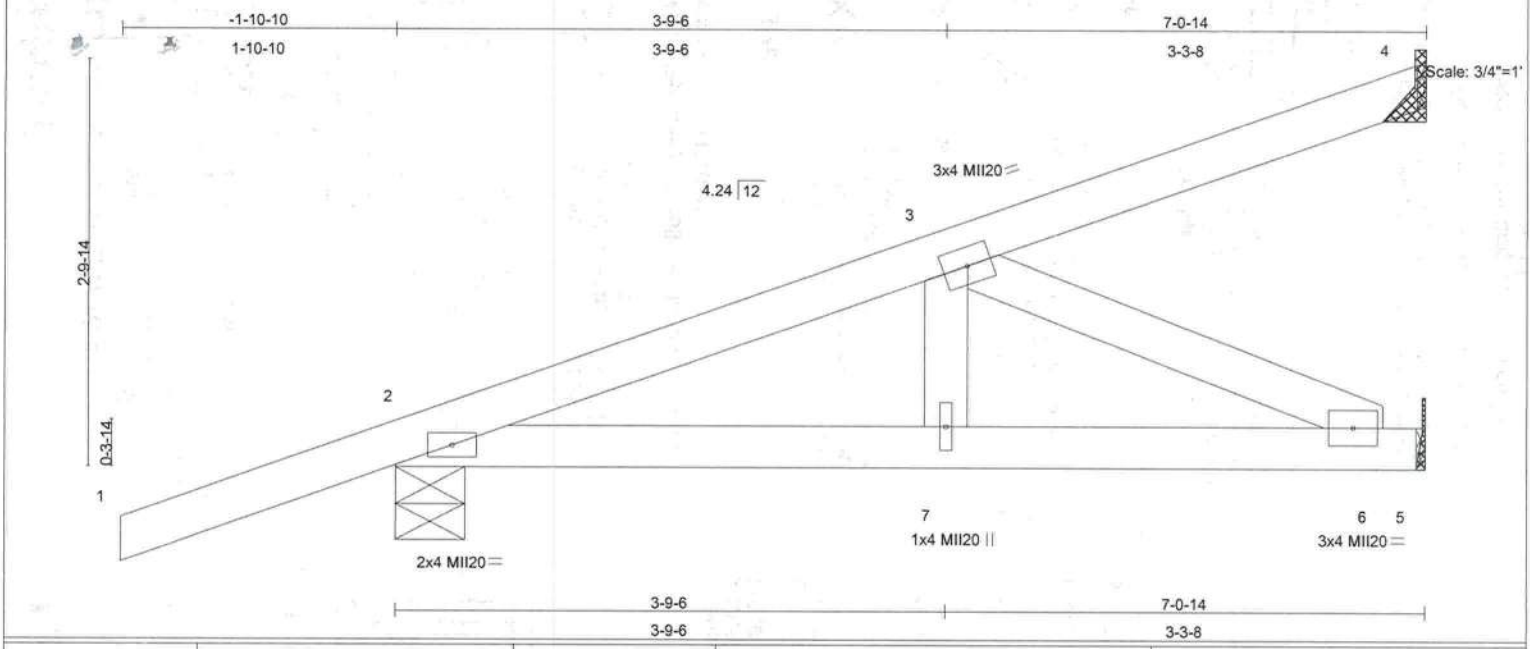

LOADING (psf)		SPACING	2-0-0	CSI		DEFL	in	(loc)	l/defl	L/d	PLATES	GRIP
TCLL	20.0	Plates Increase	1.25	TC	0.33	Vert(LL)	0.01	7	>999	360	MII20	249/190
TCDL	10.0	Lumber Increase	1.25	BC	0.16	Vert(TL)	-0.02	6-7	>999	240		
BCLL	0.0	Rep Stress Incr	NO	WB	0.08	Horz(TL)	0.00	5	n/a	n/a		
BCDL	10.0	Code FBC2004/TPI2002		(Matrix)							Weight: 31 lb	

LUMBER
TOP CHORD 2 X 4 SYP No.2
BOT CHORD 2 X 4 SYP No.2
WEBS 2 X 4 SYP No.3

BRACING
TOP CHORD Structural wood sheathing directly applied or 6-0-0 oc purlins.
BOT CHORD Rigid ceiling directly applied or 10-0-0 oc bracing.

REACTIONS (lb/size) 4=133/Mechanical, 2=315/0-5-11, 5=166/Mechanical
Max Horz 2=172(load case 2)
Max Uplift4=-126(load case 2), 2=-209(load case 2), 5=-27(load case 2)

FORCES (lb) - Maximum Compression/Maximum Tension
TOP CHORD 1-2=0/37, 2-3=-341/22, 3-4=-55/34
BOT CHORD 2-7=-113/295, 6-7=-113/295, 5-6=0/0
WEBS 3-7=0/83, 3-6=-324/124

NOTES
1) Wind: ASCE 7-02; 110mph (3-second gust); h=15ft; TCDL=5.0psf; BCDL=5.0psf; Category II; Exp C; enclosed; MWFRS gable end zone; cantilever left and right exposed ; end vertical left and right exposed; Lumber DOL=1.33 plate grip DOL=1.33.
2) This truss requires plate inspection per the Tooth Count Method when this truss is chosen for quality assurance inspection.
3) Refer to girder(s) for truss to truss connections.
4) Provide mechanical connection (by others) of truss to bearing plate capable of withstanding 126 lb uplift at joint 4, 209 lb uplift at joint 2 and 27 lb uplift at joint 5.
5) In the LOAD CASE(S) section, loads applied to the face of the truss are noted as front (F) or back (B).

LOAD CASE(S) Standard
1) Regular: Lumber Increase=1.25, Plate Increase=1.25
Uniform Loads (plf)
Vert: 1-2=-60
Trapezoidal Loads (plf)
Vert: 2=-4(F=28, B=28)-to-4=-106(F=-23, B=-23), 2=-0(F=10, B=10)-to-5=-35(F=-8, B=-8)

Scott W. Miller, FL Lic #58316
MiTek Industries, Inc.
14515 North Outer Forty Drive
Suite 300
Chesterfield, MO, 63017
FL Cert.#6634

March 23,2006

WARNING - Verify design parameters and READ NOTES ON THIS AND INCLUDED MITEK REFERENCE PAGE MII-7473 BEFORE USE.
Design valid for use only with MiTek connectors. This design is based only upon parameters shown, and is for an individual building component. Applicability of design paramenters and proper incorporation of component is responsibility of building designer - not truss designer. Bracing shown is for lateral support of individual web members only. Additional temporary bracing to insure stability during construction is the responsibility of the erector. Additional permanent bracing of the overall structure is the responsibility of the building designer. For general guidance regarding fabrication, quality control, storage, delivery, erection and bracing, consult **ANSI/TPI1 Quality Criteria, DSB-89 and BCSI1 Building Component Safety Information** available from Truss Plate Institute, 583 D'Onofrio Drive, Madison, WI 53719.

14515 N. Outer Forty,
Suite #300
Chesterfield, MO 63017

MiTek

Symbols

PLATE LOCATION AND ORIENTATION

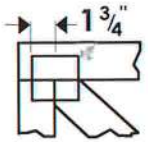

*Center plate on joint unless x, y offsets are indicated. Dimensions are in ft-in-sixteenths. Apply plates to both sides of truss and securely seat.

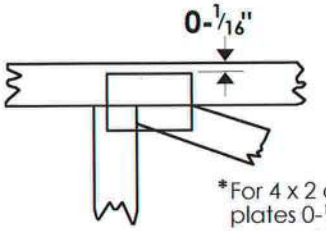

*For 4 x 2 orientation, locate plates 0-1/16" from outside edge of truss.

*This symbol indicates the required direction of slots in connector plates.

***Plate location details available in MiTek 20/20 software or upon request.**

PLATE SIZE

4 x 4

The first dimension is the width perpendicular to slots. Second dimension is the length parallel to slots.

LATERAL BRACING

Indicated by symbol shown and/or by text in the bracing section of the output. Use T, I or Eliminator bracing if indicated.

BEARING

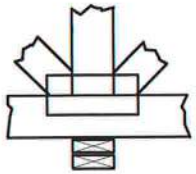

Indicates location where bearings (supports) occur. Icons vary but reaction section indicates joint number where bearings occur.

Industry Standards:

ANSI/TPI1: National Design Specification for Metal Plate Connected Wood Truss Construction.
DSB-89: Design Standard for Bracing.
BCSI1: Building Component Safety Information, Guide to Good Practice for Handling, Installing & Bracing of Metal Plate Connected Wood Trusses

Numbering System

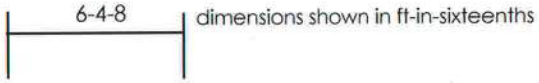

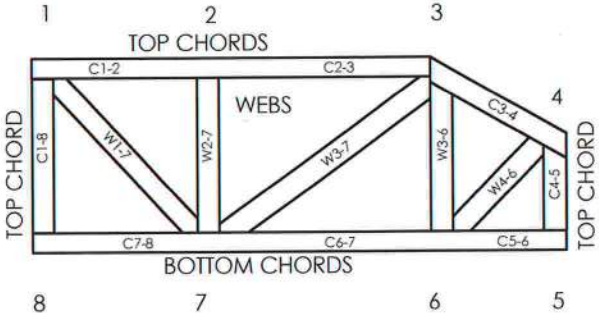

JOINTS ARE GENERALLY NUMBERED/LETTERED CLOCKWISE AROUND THE TRUSS STARTING AT THE JOINT FARTHEST TO THE LEFT.

CHORDS AND WEBS ARE IDENTIFIED BY END JOINT NUMBERS/LETTERS.

CONNECTOR PLATE CODE APPROVALS

BOCA	96-31, 95-43, 96-20-1, 96-67, 84-32
ICBO	4922, 5243, 5363, 3907
SBCCI	9667, 9730, 9604B, 9511, 9432A

MiTek®

TEE-LOK®

MiTek Engineering Reference Sheet: MII-7473

General Safety Notes

Failure to Follow Could Cause Property Damage or Personal Injury

1. Additional stability bracing for truss system, e.g. diagonal or X-bracing, is always required. See BCSI1.
2. Never exceed the design loading shown and never stack materials on inadequately braced trusses.
3. Provide copies of this truss design to the building designer, erection supervisor, property owner and all other interested parties.
4. Cut members to bear tightly against each other.
5. Place plates on each face of truss at each joint and embed fully. Knots and wane at joint locations are regulated by ANSI/TPI1.
6. Design assumes trusses will be suitably protected from the environment in accord with ANSI/TPI1.
7. Unless otherwise noted, moisture content of lumber shall not exceed 19% at time of fabrication.
8. Unless expressly noted, this design is not applicable for use with fire retardant or preservative treated lumber.
9. Camber is a non-structural consideration and is the responsibility of truss fabricator. General practice is to camber for dead load deflection.
10. Plate type, size, orientation and location dimensions shown indicate minimum plating requirements.
11. Lumber used shall be of the species and size, and in all respects, equal to or better than that specified.
12. Top chords must be sheathed or purlins provided at spacing shown on design.
13. Bottom chords require lateral bracing at 10 ft. spacing, or less, if no ceiling is installed, unless otherwise noted.
14. Connections not shown are the responsibility of others.
15. Do not cut or alter truss member or plate without prior approval of a professional engineer.
16. Install and load vertically unless indicated otherwise.

© 2004 MiTek®

Job	Truss	Truss Type	Qty	Ply	0 0
8833	CJ9	ROOF TRUSS	4	1	I10050159
					Job Reference (optional)

Reese Building Components, Inc., Sylvester Ga.

6.200 s Oct 18 2005 MiTek Industries, Inc. Wed Mar 22 15:38:24 2006 Page 1

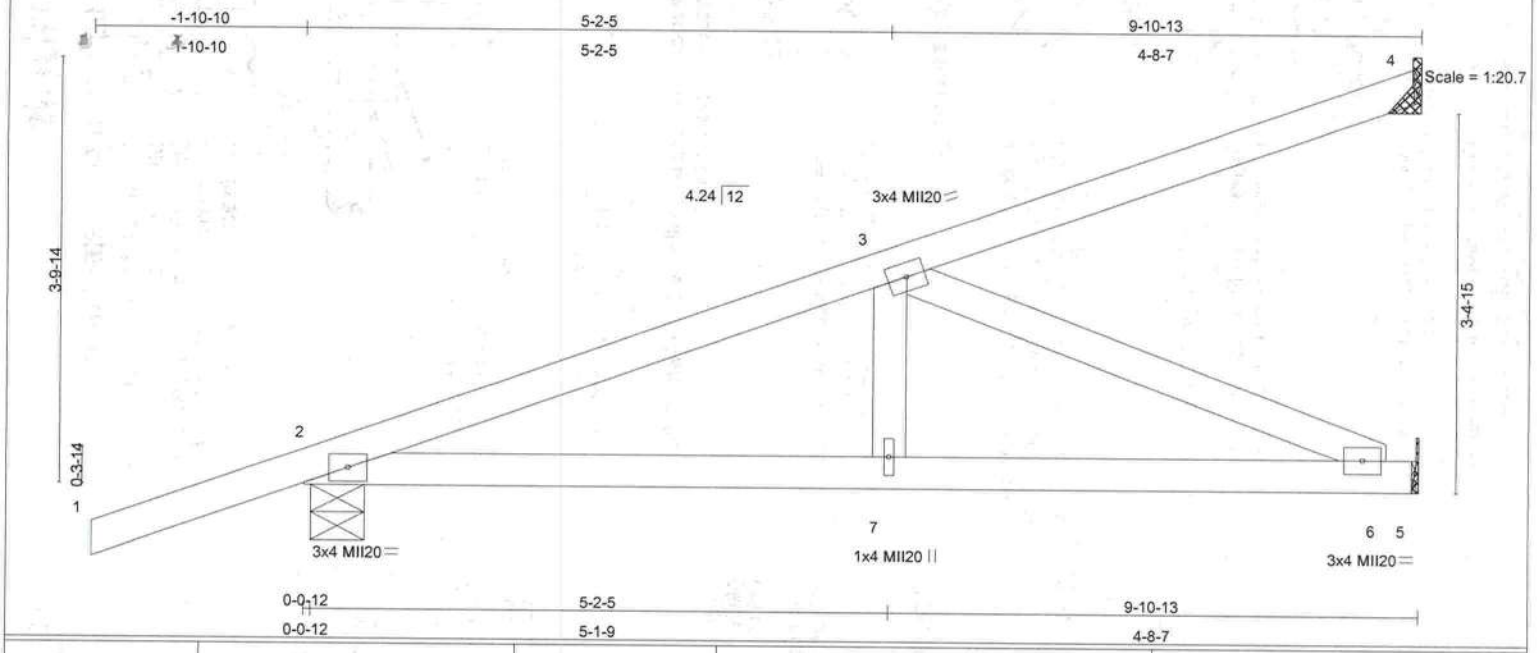

LOADING (psf)		SPACING	2-0-0	CSI		DEFL	in	(loc)	l/defl	L/d	PLATES	GRIP
TCLL	20.0	Plates Increase	1.25	TC	0.47	Vert(LL)	0.04	6-7	>999	360	MII20	249/190
TCDL	10.0	Lumber Increase	1.25	BC	0.40	Vert(TL)	-0.10	6-7	>999	240		
BCLL	0.0	Rep Stress Incr	NO	WB	0.33	Horz(TL)	0.01	5	n/a	n/a		
BCDL	10.0	Code FBC2004/TPI2002		(Matrix)							Weight: 43 lb	

LUMBER
TOP CHORD 2 X 4 SYP No.2
BOT CHORD 2 X 4 SYP No.2
WEBS 2 X 4 SYP No.3

BRACING
TOP CHORD Structural wood sheathing directly applied or 6-0-0 oc purlins.
BOT CHORD Rigid ceiling directly applied or 9-10-15 oc bracing.

REACTIONS (lb/size) 4=249/Mechanical, 5=370/Mechanical, 2=471/0-5-11
Max Horz 2=299(load case 2)
Max Uplift4=-236(load case 2), 5=-112(load case 2), 2=-248(load case 2)

FORCES (lb) - Maximum Compression/Maximum Tension
TOP CHORD 1-2=0/37, 2-3=-780/160, 3-4=-108/61
BOT CHORD 2-7=-374/713, 6-7=-374/713, 5-6=0/0
WEBS 3-7=0/147, 3-6=-774/406

NOTES
1) Wind: ASCE 7-02; 110mph (3-second gust); h=15ft; TCDL=5.0psf; BCDL=5.0psf; Category II; Exp C; enclosed; MWFRS gable end zone; cantilever left and right exposed ; end vertical left and right exposed; Lumber DOL=1.33 plate grip DOL=1.33.
2) This truss requires plate inspection per the Tooth Count Method when this truss is chosen for quality assurance inspection.
3) Refer to girder(s) for truss to truss connections.
4) Provide mechanical connection (by others) of truss to bearing plate capable of withstanding 236 lb uplift at joint 4, 112 lb uplift at joint 5 and 248 lb uplift at joint 2.
5) In the LOAD CASE(S) section, loads applied to the face of the truss are noted as front (F) or back (B).

LOAD CASE(S) Standard
1) Regular: Lumber Increase=1.25, Plate Increase=1.25
Uniform Loads (plf)
Vert: 1-2=-60
Trapezoidal Loads (plf)
Vert: 2=-4(F=28, B=28)-to-4=-148(F=-44, B=-44), 2=-0(F=10, B=10)-to-5=-49(F=-15, B=-15)

Scott W. Miller, FL Lic #58316
MiTek Industries, Inc.
14515 North Outer Forty Drive
Suite 300
Chesterfield, MO, 63017
FL Cert.#6634

March 23,2006

WARNING - Verify design parameters and READ NOTES ON THIS AND INCLUDED MITEK REFERENCE PAGE MII-7473 BEFORE USE.
Design valid for use only with MiTek connectors. This design is based only upon parameters shown, and is for an individual building component. Applicability of design paramenters and proper incorporation of component is responsibility of building designer - not truss designer. Bracing shown is for lateral support of individual web members only. Additional temporary bracing to insure stability during construction is the responsibility of the erector. Additional permanent bracing of the overall structure is the responsibility of the building designer. For general guidance regarding fabrication, quality control, storage, delivery, erection and bracing, consult **ANSI/TPI1 Quality Criteria, DSB-89 and BCSI1 Building Component Safety Information** available from Truss Plate Institute, 583 D'Onofrio Drive, Madison, WI 53719.

14515 N. Outer Forty,
Suite #300
Chesterfield, MO 63017

MiTek®

Symbols

PLATE LOCATION AND ORIENTATION

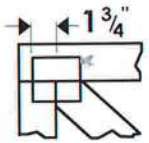

*Center plate on joint unless x, y offsets are indicated. Dimensions are in ft-in-sixteenths. Apply plates to both sides of truss and securely seat.

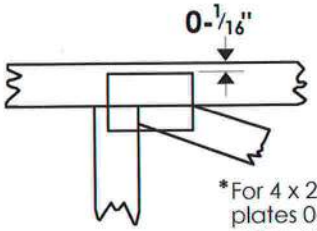

*For 4 x 2 orientation, locate plates 0-1/16" from outside edge of truss.

*This symbol indicates the required direction of slots in connector plates.

***Plate location details available in MiTek 20/20 software or upon request.**

PLATE SIZE

4 x 4

The first dimension is the width perpendicular to slots. Second dimension is the length parallel to slots.

LATERAL BRACING

Indicated by symbol shown and/or by text in the bracing section of the output. Use T, I or Eliminator bracing if indicated.

BEARING

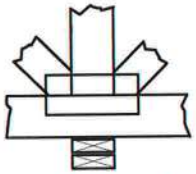

Indicates location where bearings (supports) occur. Icons vary but reaction section indicates joint number where bearings occur.

Industry Standards:

ANSI/TPI1: National Design Specification for Metal Plate Connected Wood Truss Construction.
DSB-89: Design Standard for Bracing.
BCSI1: Building Component Safety Information, Guide to Good Practice for Handling, Installing & Bracing of Metal Plate Connected Wood Trusses

Numbering System

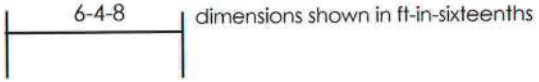

dimensions shown in ft-in-sixteenths

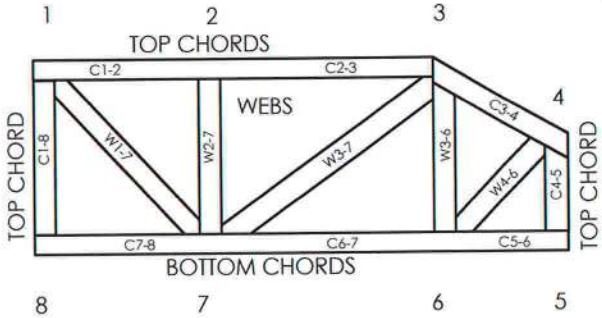

JOINTS ARE GENERALLY NUMBERED/LETTERED CLOCKWISE AROUND THE TRUSS STARTING AT THE JOINT FARTHEST TO THE LEFT.

CHORDS AND WEBS ARE IDENTIFIED BY END JOINT NUMBERS/LETTERS.

CONNECTOR PLATE CODE APPROVALS

BOCA	96-31, 95-43, 96-20-1, 96-67, 84-32
ICBO	4922, 5243, 5363, 3907
SBCCI	9667, 9730, 9604B, 9511, 9432A

MiTek®

TEE-LOK®

MiTek Engineering Reference Sheet: MII-7473

General Safety Notes

Failure to Follow Could Cause Property Damage or Personal Injury

1. Additional stability bracing for truss system, e.g. diagonal or X-bracing, is always required. See BCSI1.
2. Never exceed the design loading shown and never stack materials on inadequately braced trusses.
3. Provide copies of this truss design to the building designer, erection supervisor, property owner and all other interested parties.
4. Cut members to bear tightly against each other.
5. Place plates on each face of truss at each joint and embed fully. Knots and wane at joint locations are regulated by ANSI/TPI1.
6. Design assumes trusses will be suitably protected from the environment in accord with ANSI/TPI1.
7. Unless otherwise noted, moisture content of lumber shall not exceed 19% at time of fabrication.
8. Unless expressly noted, this design is not applicable for use with fire retardant or preservative treated lumber.
9. Camber is a non-structural consideration and is the responsibility of truss fabricator. General practice is to camber for dead load deflection.
10. Plate type, size, orientation and location dimensions shown indicate minimum plating requirements.
11. Lumber used shall be of the species and size, and in all respects, equal to or better than that specified.
12. Top chords must be sheathed or purlins provided at spacing shown on design.
13. Bottom chords require lateral bracing at 10 ft. spacing, or less, if no ceiling is installed, unless otherwise noted.
14. Connections not shown are the responsibility of others.
15. Do not cut or alter truss member or plate without prior approval of a professional engineer.
16. Install and load vertically unless indicated otherwise.

© 2004 MiTek®

Job	Truss	Truss Type	Qty	Ply	0 0
8833	H1	ROOF TRUSS	1	2	I10050160

Job Reference (optional)

Reese Building Components, Inc., Sylvester Ga.

6.200 s Oct 18 2005 MiTek Industries, Inc. Wed Mar 22 15:38:25 2006 Page 1

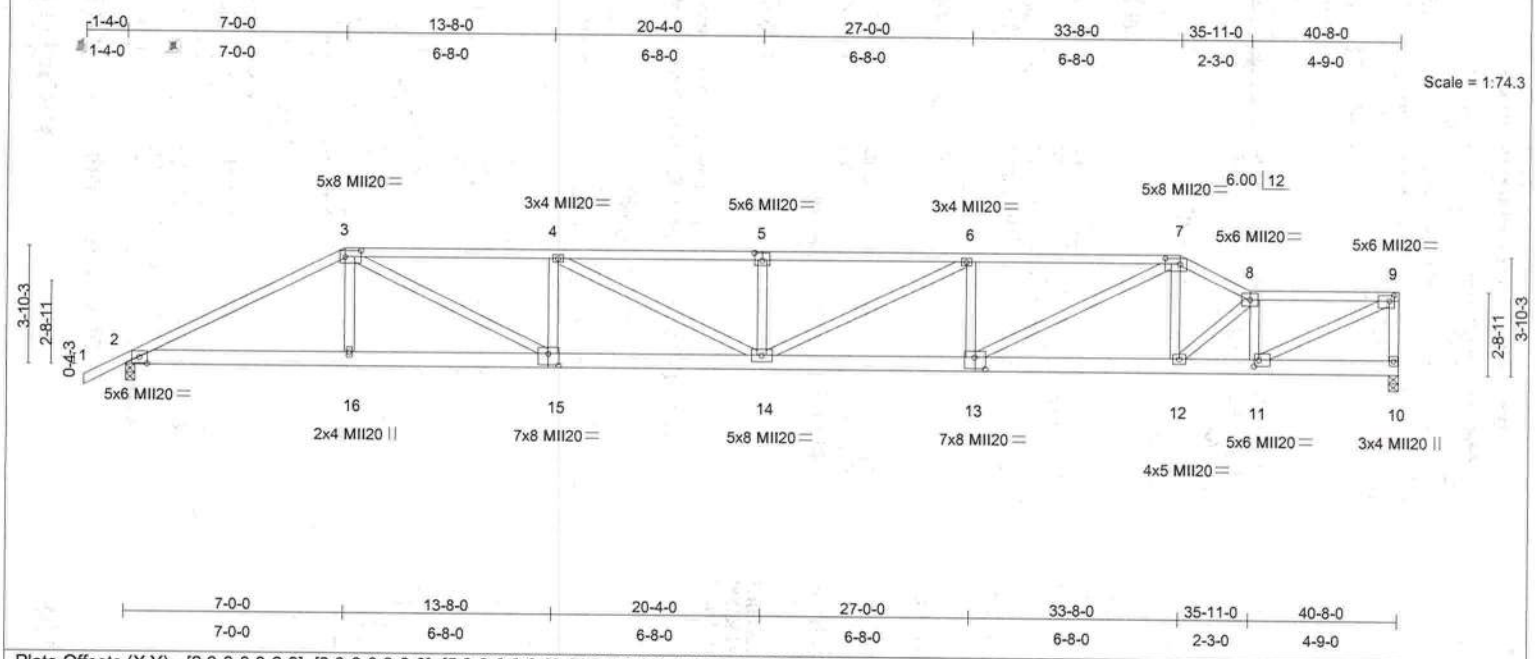

Plate Offsets (X,Y): [2:0-3-0,0-2-9], [3:0-6-0,0-2-8], [5:0-3-0,0-3-0], [7:0-5-8,0-2-4], [9:0-1-12,0-2-4], [11:0-1-12,0-2-8], [13:0-4-0,0-4-8], [15:0-4-0,0-4-8]

LOADING (psf)		SPACING	2-0-0	CSI		DEFL	in	(loc)	l/defl	L/d	PLATES	GRIP
TCLL	20.0	Plates Increase	1.25	TC	0.78	Vert(LL)	0.48	14	>999	360	MII20	249/190
TCDL	10.0	Lumber Increase	1.25	BC	0.77	Vert(TL)	-1.02	14	>475	240		
BCLL	0.0	Rep Stress Incr	NO	WB	1.00	Horz(TL)	-0.15	2	n/a	n/a		
BCDL	10.0	Code FBC2004/TPI2002		(Matrix)							Weight: 483 lb	

LUMBER
TOP CHORD 2 X 4 SYP No.2
BOT CHORD 2 X 6 SYP No.2
WEBS 2 X 4 SYP No.3

BRACING
TOP CHORD Structural wood sheathing directly applied or 3-4-14 oc purlins, except end verticals.
BOT CHORD Rigid ceiling directly applied or 10-0-0 oc bracing.

REACTIONS (lb/size) 10=3548/0-3-8, 2=3437/0-3-8
Max Horz 10=120(load case 3)
Max Uplift10=-650(load case 3), 2=-682(load case 3)

FORCES (lb) - Maximum Compression/Maximum Tension
TOP CHORD 9-10=-3284/679, 8-9=-5812/1011, 7-8=-6682/1236, 3-4=-9496/1937, 4-5=-10509/2118, 5-6=-10509/2118, 6-7=-9362/1862, 1-2=0/39, 2-3=-7000/1388
BOT CHORD 2-16=-1154/6179, 15-16=-1152/6210, 14-15=-1799/9496, 13-14=-1758/9362, 12-13=-1078/6015, 11-12=-1049/6009, 10-11=-92/283
WEBS 9-11=-1083/6248, 8-11=-3172/697, 8-12=-49/121, 7-12=0/484, 7-13=-806/3823, 6-13=-1499/609, 6-14=-289/1345, 5-14=-854/452, 4-14=-235/1180, 4-15=-1451/594, 3-15=-798/3797, 3-16=0/747

NOTES
1) 2-ply truss to be connected together with 10d Common(.148"x3") Nails as follows:
Top chords connected as follows: 2 X 4 - 1 row at 0-9-0 oc.
Bottom chords connected as follows: 2 X 6 - 2 rows at 0-9-0 oc.
Webs connected as follows: 2 X 4 - 1 row at 0-9-0 oc.
2) All loads are considered equally applied to all plies, except if noted as front (F) or back (B) face in the LOAD CASE(S) section. Ply to ply connections have been provided to distribute only loads noted as (F) or (B), unless otherwise indicated.
3) Unbalanced roof live loads have been considered for this design.
4) Wind: ASCE 7-02; 110mph (3-second gust); h=15ft; TCDL=5.0psf; BCDL=5.0psf; Category II; Exp C; enclosed; MWFRS gable end zone; cantilever left and right exposed ; end vertical left and right exposed; Lumber DOL=1.33 plate grip DOL=1.33.
5) Provide adequate drainage to prevent water ponding.
6) This truss requires plate inspection per the Tooth Count Method when this truss is chosen for quality assurance inspection.
7) Provide mechanical connection (by others) of truss to bearing plate capable of withstanding 650 lb uplift at joint 10 and 682 lb uplift at joint 2.
8) Girder carries hip end with 0-0-0 right side setback, 7-0-0 left side setback, and 7-0-0 end setback.
9) Hanger(s) or other connection device(s) shall be provided sufficient to support concentrated load(s) 513 lb down and 102 lb up at 7-0-0 on bottom chord. The design/selection of such connection device(s) is the responsibility of others.

LOAD CASE(S) Standard

Continued on page 2

Scott W. Miller, FL Lic #58316
MiTek Industries, Inc.
14515 North Outer Forty Drive
Suite 300
Chesterfield, MO, 63017
FL Cert.#6634

March 23,2006

WARNING - Verify design parameters and READ NOTES ON THIS AND INCLUDED MITEK REFERENCE PAGE MII-7473 BEFORE USE.
Design valid for use only with MiTek connectors. This design is based only upon parameters shown, and is for an individual building component. Applicability of design paramenters and proper incorporation of component is responsibility of building designer - not truss designer. Bracing shown is for lateral support of individual web members only. Additional temporary bracing to insure stability during construction is the responsibility of the erector. Additional permanent bracing of the overall structure is the responsibility of the building designer. For general guidance regarding fabrication, quality control, storage, delivery, erection and bracing, consult **ANSI/TPI1 Quality Criteria, DSB-89 and BCSI1 Building Component Safety Information** available from Truss Plate Institute, 583 D'Onofrio Drive, Madison, WI 53719.

14515 N. Outer Forty,
Suite #300
Chesterfield, MO 63017

MiTek®

Symbols

PLATE LOCATION AND ORIENTATION

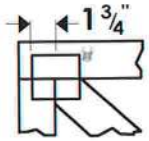

*Center plate on joint unless x, y offsets are indicated. Dimensions are in ft-in-sixteenths. Apply plates to both sides of truss and securely seat.

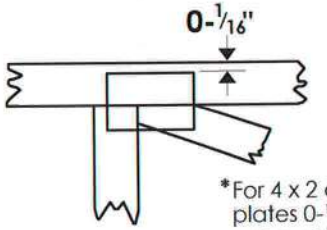

*For 4 x 2 orientation, locate plates 0-1/16" from outside edge of truss.

*This symbol indicates the required direction of slots in connector plates.

***Plate location details available in MiTek 20/20 software or upon request.**

PLATE SIZE

4 x 4

The first dimension is the width perpendicular to slots. Second dimension is the length parallel to slots.

LATERAL BRACING

Indicated by symbol shown and/or by text in the bracing section of the output. Use T, I or Eliminator bracing if indicated.

BEARING

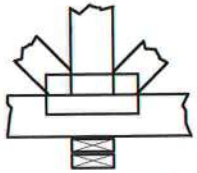

Indicates location where bearings (supports) occur. Icons vary but reaction section indicates joint number where bearings occur.

Industry Standards:

ANSI/TPI1: National Design Specification for Metal Plate Connected Wood Truss Construction.
DSB-89: Design Standard for Bracing.
BCSI1: Building Component Safety Information, Guide to Good Practice for Handling, Installing & Bracing of Metal Plate Connected Wood Trusses

Numbering System

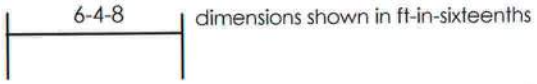

dimensions shown in ft-in-sixteenths

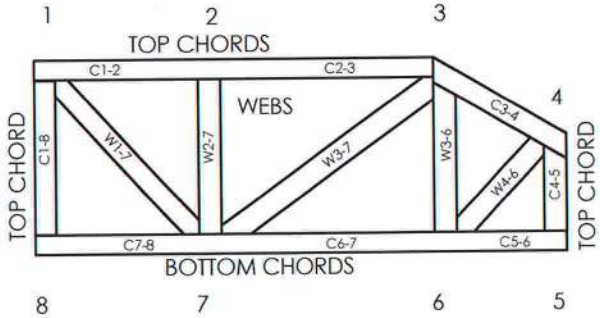

JOINTS ARE GENERALLY NUMBERED/LETTERED CLOCKWISE AROUND THE TRUSS STARTING AT THE JOINT FARTHEST TO THE LEFT.

CHORDS AND WEBS ARE IDENTIFIED BY END JOINT NUMBERS/LETTERS.

CONNECTOR PLATE CODE APPROVALS

BOCA	96-31, 95-43, 96-20-1, 96-67, 84-32
ICBO	4922, 5243, 5363, 3907
SBCCI	9667, 9730, 9604B, 9511, 9432A

MiTek®

TEE-LOK®

MiTek Engineering Reference Sheet: MII-7473

General Safety Notes

Failure to Follow Could Cause Property Damage or Personal Injury

1. Additional stability bracing for truss system, e.g. diagonal or X-bracing, is always required. See BCSI1.
2. Never exceed the design loading shown and never stack materials on inadequately braced trusses.
3. Provide copies of this truss design to the building designer, erection supervisor, property owner and all other interested parties.
4. Cut members to bear tightly against each other.
5. Place plates on each face of truss at each joint and embed fully. Knots and wane at joint locations are regulated by ANSI/TPI1.
6. Design assumes trusses will be suitably protected from the environment in accord with ANSI/TPI1.
7. Unless otherwise noted, moisture content of lumber shall not exceed 19% at time of fabrication.
8. Unless expressly noted, this design is not applicable for use with fire retardant or preservative treated lumber.
9. Camber is a non-structural consideration and is the responsibility of truss fabricator. General practice is to camber for dead load deflection.
10. Plate type, size, orientation and location dimensions shown indicate minimum plating requirements.
11. Lumber used shall be of the species and size, and in all respects, equal to or better than that specified.
12. Top chords must be sheathed or purlins provided at spacing shown on design.
13. Bottom chords require lateral bracing at 10 ft. spacing, or less, if no ceiling is installed, unless otherwise noted.
14. Connections not shown are the responsibility of others.
15. Do not cut or alter truss member or plate without prior approval of a professional engineer.
16. Install and load vertically unless indicated otherwise.

© 2004 MiTek®

LOAD CASE(S) Standard

1) Regular: Lumber Increase=1.25, Plate Increase=1.25

Uniform Loads (plf)

Vert: 8-9=-131(F=-71), 7-8=-131(F=-71), 3-7=-131(F=-71), 1-3=-60, 2-16=-20, 10-16=-44(F=-24)

Concentrated Loads (lb)

Vert: 16=-513(F)

WARNING - Verify design parameters and READ NOTES ON THIS AND INCLUDED MITEK REFERENCE PAGE MII-7473 BEFORE USE.

Design valid for use only with MiTek connectors. This design is based only upon parameters shown, and is for an individual building component. Applicability of design paramenters and proper incorporation of component is responsibility of building designer - not truss designer. Bracing shown is for lateral support of individual web members only. Additional temporary bracing to insure stability during construction is the responsibility of the erector. Additional permanent bracing of the overall structure is the responsibility of the building designer. For general guidance regarding fabrication, quality control, storage, delivery, erection and bracing, consult **ANSI/TPI1 Quality Criteria, DSB-89 and BCSI1 Building Component Safety Information** available from Truss Plate Institute, 583 D'Onofrio Drive, Madison, WI 53719.

14515 N. Outer Forty,
Suite #300
Chesterfield, MO 63017

MiTek®

Symbols

PLATE LOCATION AND ORIENTATION

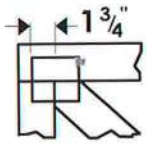

*Center plate on joint unless x, y offsets are indicated. Dimensions are in ft-in-sixteenths. Apply plates to both sides of truss and securely seat.

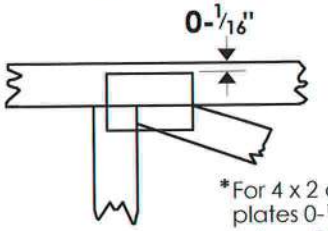

*For 4 x 2 orientation, locate plates 0-1/16" from outside edge of truss.

*This symbol indicates the required direction of slots in connector plates.

***Plate location details available in MiTek 20/20 software or upon request.**

PLATE SIZE

4 x 4

The first dimension is the width perpendicular to slots. Second dimension is the length parallel to slots.

LATERAL BRACING

Indicated by symbol shown and/or by text in the bracing section of the output. Use T, I or Eliminator bracing if indicated.

BEARING

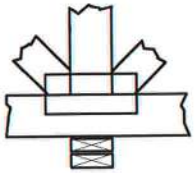

Indicates location where bearings (supports) occur. Icons vary but reaction section indicates joint number where bearings occur.

Industry Standards:

ANSI/TPI1: National Design Specification for Metal Plate Connected Wood Truss Construction.
DSB-89: Design Standard for Bracing.
BCSI1: Building Component Safety Information, Guide to Good Practice for Handling, Installing & Bracing of Metal Plate Connected Wood Trusses

Numbering System

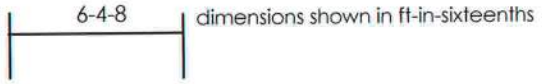

dimensions shown in ft-in-sixteenths

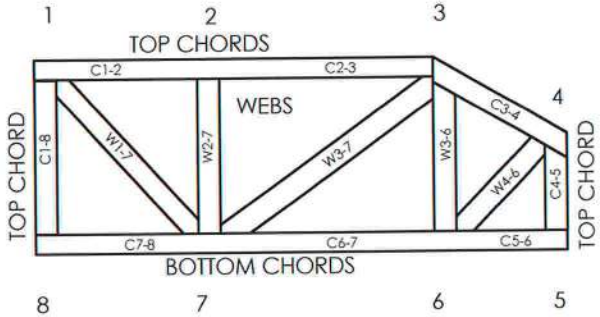

JOINTS ARE GENERALLY NUMBERED/LETTERED CLOCKWISE AROUND THE TRUSS STARTING AT THE JOINT FARTHEST TO THE LEFT.

CHORDS AND WEBS ARE IDENTIFIED BY END JOINT NUMBERS/LETTERS.

CONNECTOR PLATE CODE APPROVALS

BOCA	96-31, 95-43, 96-20-1, 96-67, 84-32
ICBO	4922, 5243, 5363, 3907
SBCCI	9667, 9730, 9604B, 9511, 9432A

MiTek®

TEE-LOK®

MiTek Engineering Reference Sheet: MII-7473

General Safety Notes

Failure to Follow Could Cause Property Damage or Personal Injury

1. Additional stability bracing for truss system, e.g. diagonal or X-bracing, is always required. See BCSI1.
2. Never exceed the design loading shown and never stack materials on inadequately braced trusses.
3. Provide copies of this truss design to the building designer, erection supervisor, property owner and all other interested parties.
4. Cut members to bear tightly against each other.
5. Place plates on each face of truss at each joint and embed fully. Knots and wane at joint locations are regulated by ANSI/TPI1.
6. Design assumes trusses will be suitably protected from the environment in accord with ANSI/TPI1.
7. Unless otherwise noted, moisture content of lumber shall not exceed 19% at time of fabrication.
8. Unless expressly noted, this design is not applicable for use with fire retardant or preservative treated lumber.
9. Camber is a non-structural consideration and is the responsibility of truss fabricator. General practice is to camber for dead load deflection.
10. Plate type, size, orientation and location dimensions shown indicate minimum plating requirements.
11. Lumber used shall be of the species and size, and in all respects, equal to or better than that specified.
12. Top chords must be sheathed or purlins provided at spacing shown on design.
13. Bottom chords require lateral bracing at 10 ft. spacing, or less, if no ceiling is installed, unless otherwise noted.
14. Connections not shown are the responsibility of others.
15. Do not cut or alter truss member or plate without prior approval of a professional engineer.
16. Install and load vertically unless indicated otherwise.

© 2004 MiTek®

Job	Truss	Truss Type	Qty	Ply	0 0
8833	H10	ROOF TRUSS	1	1	I10050161
					Job Reference (optional)

Reese Building Components, Inc., Sylvester Ga.

6.200 s Oct 18 2005 MiTek Industries, Inc. Wed Mar 22 15:38:26 2006 Page 1

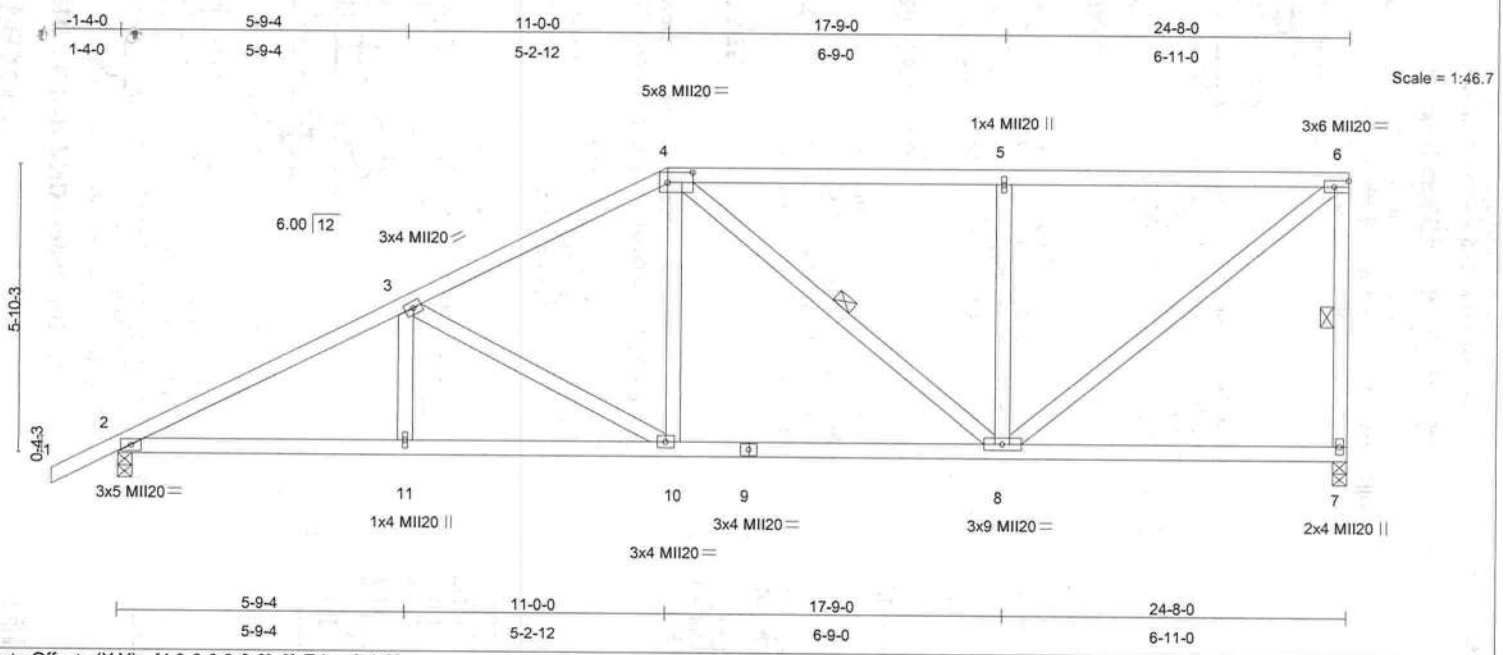

Plate Offsets (X,Y): [4:0-6-0,0-2-8], [6:Edge,0-1-8]

LOADING (psf)		SPACING	2-0-0	CSI		DEFL	in	(loc)	l/defl	L/d	PLATES	GRIP
TCLL	20.0	Plates Increase	1.25	TC	0.57	Vert(LL)	0.06	8-10	>999	360	MII20	249/190
TCDL	10.0	Lumber Increase	1.25	BC	0.39	Vert(TL)	-0.15	8-10	>999	240		
BCLL	0.0	Rep Stress Incr	YES	WB	0.64	Horz(TL)	0.04	7	n/a	n/a		
BCDL	10.0	Code FBC2004/TPI2002		(Matrix)							Weight: 138 lb	

LUMBER
TOP CHORD 2 X 4 SYP No.2
BOT CHORD 2 X 4 SYP No.2
WEBS 2 X 4 SYP No.3

BRACING
TOP CHORD Structural wood sheathing directly applied or 4-6-7 oc purlins, except end verticals.
BOT CHORD Rigid ceiling directly applied or 7-11-5 oc bracing.
WEBS 1 Row at midpt 6-7, 4-8

REACTIONS (lb/size) 7=972/0-3-8, 2=1066/0-3-8
Max Horz 2=333(load case 3)
Max Uplift7=-420(load case 3), 2=-461(load case 4)

FORCES (lb) - Maximum Compression/Maximum Tension
TOP CHORD 1-2=0/35, 2-3=-1751/587, 3-4=-1282/463, 4-5=-914/367, 5-6=-914/367, 6-7=-903/438
BOT CHORD 2-11=-618/1488, 10-11=-618/1488, 9-10=-512/1095, 8-9=-512/1095, 7-8=-80/76
WEBS 3-11=0/121, 3-10=-457/300, 4-10=-84/338, 4-8=-235/151, 5-8=-435/349, 6-8=-484/1132

NOTES
1) Wind: ASCE 7-02; 110mph (3-second gust); h=15ft; TCDL=5.0psf; BCDL=5.0psf; Category II; Exp C; enclosed; MWFRS gable end zone; cantilever left and right exposed ; end vertical left and right exposed; Lumber DOL=1.33 plate grip DOL=1.33.
2) Provide adequate drainage to prevent water ponding.
3) This truss requires plate inspection per the Tooth Count Method when this truss is chosen for quality assurance inspection.
4) Provide mechanical connection (by others) of truss to bearing plate capable of withstanding 420 lb uplift at joint 7 and 461 lb uplift at joint 2.

LOAD CASE(S) Standard

Scott W. Miller, FL Lic #58316
MiTek Industries, Inc.
14515 North Outer Forty Drive
Suite 300
Chesterfield, MO, 63017
FL Cert.#6634

March 23,2006

WARNING - Verify design parameters and READ NOTES ON THIS AND INCLUDED MITEK REFERENCE PAGE MII-7473 BEFORE USE.
Design valid for use only with MiTek connectors. This design is based only upon parameters shown, and is for an individual building component. Applicability of design paramenters and proper incorporation of component is responsibility of building designer - not truss designer. Bracing shown is for lateral support of individual web members only. Additional temporary bracing to insure stability during construction is the responsibility of the erector. Additional permanent bracing of the overall structure is the responsibility of the building designer. For general guidance regarding fabrication, quality control, storage, delivery, erection and bracing, consult **ANSI/TPI1 Quality Criteria, DSB-89 and BCSI1 Building Component Safety Information** available from Truss Plate Institute, 583 D'Onofrio Drive, Madison, WI 53719.

14515 N. Outer Forty,
Suite #300
Chesterfield, MO 63017

MiTek®

Symbols

PLATE LOCATION AND ORIENTATION

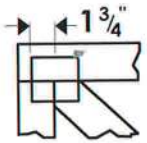

*Center plate on joint unless x, y offsets are indicated. Dimensions are in ft-in-sixteenths. Apply plates to both sides of truss and securely seat.

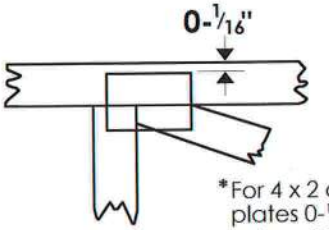

*For 4 x 2 orientation, locate plates 0-1/16" from outside edge of truss.

*This symbol indicates the required direction of slots in connector plates.

***Plate location details available in MiTek 20/20 software or upon request.**

PLATE SIZE

4 x 4

The first dimension is the width perpendicular to slots. Second dimension is the length parallel to slots.

LATERAL BRACING

Indicated by symbol shown and/or by text in the bracing section of the output. Use T, I or Eliminator bracing if indicated.

BEARING

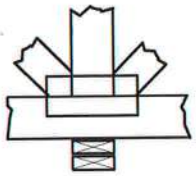

Indicates location where bearings (supports) occur. Icons vary but reaction section indicates joint number where bearings occur.

Industry Standards:

ANSI/TPI1: National Design Specification for Metal Plate Connected Wood Truss Construction.
DSB-89: Design Standard for Bracing.
BCSI1: Building Component Safety Information, Guide to Good Practice for Handling, Installing & Bracing of Metal Plate Connected Wood Trusses

Numbering System

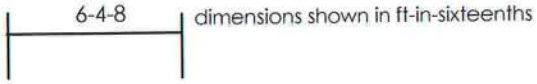

dimensions shown in ft-in-sixteenths

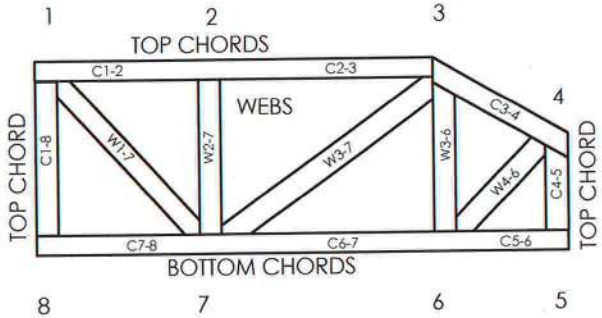

JOINTS ARE GENERALLY NUMBERED/LETTERED CLOCKWISE AROUND THE TRUSS STARTING AT THE JOINT FARTHEST TO THE LEFT.

CHORDS AND WEBS ARE IDENTIFIED BY END JOINT NUMBERS/LETTERS.

CONNECTOR PLATE CODE APPROVALS

BOCA	96-31, 95-43, 96-20-1, 96-67, 84-32
ICBO	4922, 5243, 5363, 3907
SBCCI	9667, 9730, 9604B, 9511, 9432A

MiTek®

TEE-LOK®

MiTek Engineering Reference Sheet: MII-7473

General Safety Notes

Failure to Follow Could Cause Property Damage or Personal Injury

1. Additional stability bracing for truss system, e.g. diagonal or X-bracing, is always required. See BCSI1.
2. Never exceed the design loading shown and never stack materials on inadequately braced trusses.
3. Provide copies of this truss design to the building designer, erection supervisor, property owner and all other interested parties.
4. Cut members to bear tightly against each other.
5. Place plates on each face of truss at each joint and embed fully. Knots and wane at joint locations are regulated by ANSI/TPI1.
6. Design assumes trusses will be suitably protected from the environment in accord with ANSI/TPI1.
7. Unless otherwise noted, moisture content of lumber shall not exceed 19% at time of fabrication.
8. Unless expressly noted, this design is not applicable for use with fire retardant or preservative treated lumber.
9. Camber is a non-structural consideration and is the responsibility of truss fabricator. General practice is to camber for dead load deflection.
10. Plate type, size, orientation and location dimensions shown indicate minimum plating requirements.
11. Lumber used shall be of the species and size, and in all respects, equal to or better than that specified.
12. Top chords must be sheathed or purlins provided at spacing shown on design.
13. Bottom chords require lateral bracing at 10 ft. spacing, or less, if no ceiling is installed, unless otherwise noted.
14. Connections not shown are the responsibility of others.
15. Do not cut or alter truss member or plate without prior approval of a professional engineer.
16. Install and load vertically unless indicated otherwise.

© 2004 MiTek®

Job	Truss	Truss Type	Qty	Ply	0 0
8833	H11	ROOF TRUSS	1	1	I10050162
					Job Reference (optional)

Reese Building Components, Inc., Sylvester Ga.

6.200 s Oct 18 2005 MiTek Industries, Inc. Wed Mar 22 15:38:26 2006 Page 1

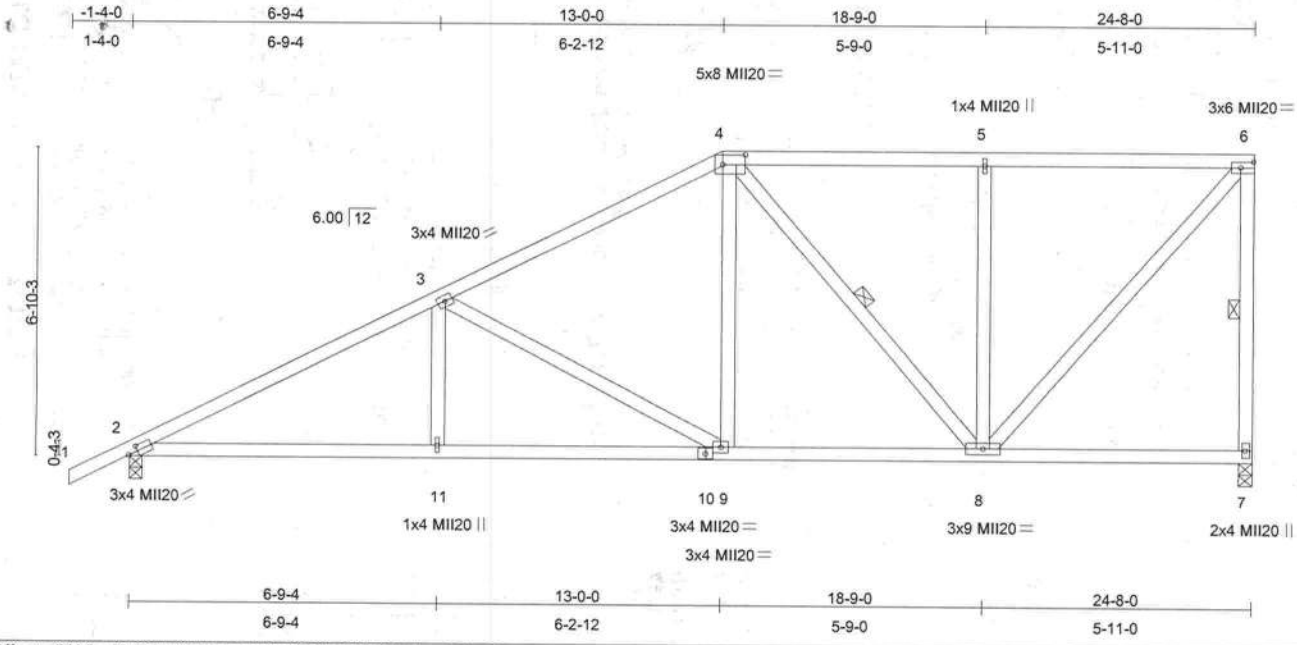

Plate Offsets (X,Y): [2:0-2-10,0-1-8], [4:0-6-0,0-2-8], [6:Edge,0-1-8]

LOADING (psf)		SPACING	2-0-0	CSI		DEFL	in	(loc)	l/defl	L/d	PLATES	GRIP
TCLL	20.0	Plates Increase	1.25	TC	0.45	Vert(LL)	0.07	2-11	>999	360	MII20	249/190
TCDL	10.0	Lumber Increase	1.25	BC	0.43	Vert(TL)	-0.17	2-11	>999	240		
BCLL	0.0	Rep Stress Incr	YES	WB	0.56	Horz(TL)	0.04	7	n/a	n/a		
BCDL	10.0	Code FBC2004/TPI2002		(Matrix)							Weight: 146 lb	

LUMBER
TOP CHORD 2 X 4 SYP No.2
BOT CHORD 2 X 4 SYP No.2
WEBS 2 X 4 SYP No.3

BRACING
TOP CHORD Structural wood sheathing directly applied or 4-5-7 oc purlins, except end verticals.
BOT CHORD Rigid ceiling directly applied or 7-10-14 oc bracing.
WEBS 1 Row at midpt 6-7, 4-8

REACTIONS (lb/size) 7=972/0-3-8, 2=1066/0-3-8
Max Horz 2=390(load case 3)
Max Uplift7=-413(load case 3), 2=-471(load case 4)

FORCES (lb) - Maximum Compression/Maximum Tension
TOP CHORD 1-2=0/35, 2-3=-1716/594, 3-4=-1124/433, 4-5=-687/322, 5-6=-687/322, 6-7=-913/421
BOT CHORD 2-11=-603/1450, 10-11=-603/1450, 9-10=-603/1450, 8-9=-449/935, 7-8=-85/91
WEBS 3-11=0/156, 3-9=-595/377, 4-9=-114/397, 4-8=-376/208, 5-8=-361/302, 6-8=-423/1006

NOTES
1) Wind: ASCE 7-02; 110mph (3-second gust); h=15ft; TCDL=5.0psf; BCDL=5.0psf; Category II; Exp C; enclosed; MWFRS gable end zone; cantilever left and right exposed ; end vertical left and right exposed; Lumber DOL=1.33 plate grip DOL=1.33.
2) Provide adequate drainage to prevent water ponding.
3) This truss requires plate inspection per the Tooth Count Method when this truss is chosen for quality assurance inspection.
4) Provide mechanical connection (by others) of truss to bearing plate capable of withstanding 413 lb uplift at joint 7 and 471 lb uplift at joint 2.

LOAD CASE(S) Standard

Scott W. Miller, FL Lic #58316
MiTek Industries, Inc.
14515 North Outer Forty Drive
Suite 300
Chesterfield, MO, 63017
FL Cert.#6634

March 23,2006

WARNING - Verify design parameters and READ NOTES ON THIS AND INCLUDED MITEK REFERENCE PAGE MII-7473 BEFORE USE.
Design valid for use only with MiTek connectors. This design is based only upon parameters shown, and is for an individual building component. Applicability of design paramenters and proper incorporation of component is responsibility of building designer - not truss designer. Bracing shown is for lateral support of individual web members only. Additional temporary bracing to insure stability during construction is the responsibility of the erector. Additional permanent bracing of the overall structure is the responsibility of the building designer. For general guidance regarding fabrication, quality control, storage, delivery, erection and bracing, consult **ANSI/TPI1 Quality Criteria, DSB-89 and BCSI1 Building Component Safety Information** available from Truss Plate Institute, 583 D'Onofrio Drive, Madison, WI 53719.

14515 N. Outer Forty,
Suite #300
Chesterfield, MO 63017

MiTek®

Symbols

PLATE LOCATION AND ORIENTATION

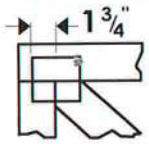

*Center plate on joint unless x, y offsets are indicated. Dimensions are in ft-in-sixteenths. Apply plates to both sides of truss and securely seat.

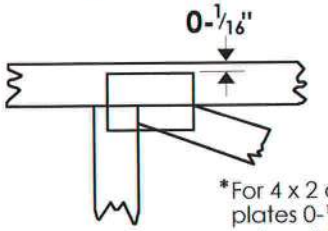

*For 4 x 2 orientation, locate plates 0-1/16" from outside edge of truss.

*This symbol indicates the required direction of slots in connector plates.

***Plate location details available in MiTek 20/20 software or upon request.**

PLATE SIZE

4 x 4

The first dimension is the width perpendicular to slots. Second dimension is the length parallel to slots.

LATERAL BRACING

Indicated by symbol shown and/or by text in the bracing section of the output. Use T, I or Eliminator bracing if indicated.

BEARING

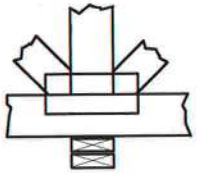

Indicates location where bearings (supports) occur. Icons vary but reaction section indicates joint number where bearings occur.

Industry Standards:

ANSI/TPI1: National Design Specification for Metal Plate Connected Wood Truss Construction.
DSB-89: Design Standard for Bracing.
BCSI1: Building Component Safety Information, Guide to Good Practice for Handling, Installing & Bracing of Metal Plate Connected Wood Trusses

Numbering System

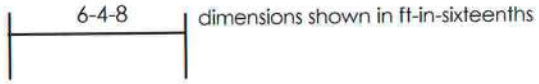

dimensions shown in ft-in-sixteenths

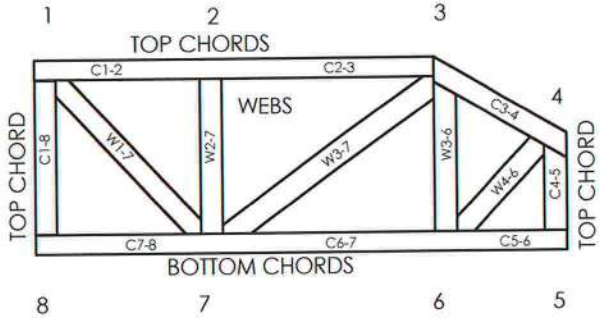

JOINTS ARE GENERALLY NUMBERED/LETTERED CLOCKWISE AROUND THE TRUSS STARTING AT THE JOINT FARTHEST TO THE LEFT.

CHORDS AND WEBS ARE IDENTIFIED BY END JOINT NUMBERS/LETTERS.

CONNECTOR PLATE CODE APPROVALS

BOCA	96-31, 95-43, 96-20-1, 96-67, 84-32
ICBO	4922, 5243, 5363, 3907
SBCCI	9667, 9730, 9604B, 9511, 9432A

MiTek®

TEE-LOK®

MiTek Engineering Reference Sheet: MII-7473

General Safety Notes

Failure to Follow Could Cause Property Damage or Personal Injury

1. Additional stability bracing for truss system, e.g. diagonal or X-bracing, is always required. See BCSI1.
2. Never exceed the design loading shown and never stack materials on inadequately braced trusses.
3. Provide copies of this truss design to the building designer, erection supervisor, property owner and all other interested parties.
4. Cut members to bear tightly against each other.
5. Place plates on each face of truss at each joint and embed fully. Knots and wane at joint locations are regulated by ANSI/TPI1.
6. Design assumes trusses will be suitably protected from the environment in accord with ANSI/TPI1.
7. Unless otherwise noted, moisture content of lumber shall not exceed 19% at time of fabrication.
8. Unless expressly noted, this design is not applicable for use with fire retardant or preservative treated lumber.
9. Camber is a non-structural consideration and is the responsibility of truss fabricator. General practice is to camber for dead load deflection.
10. Plate type, size, orientation and location dimensions shown indicate minimum plating requirements.
11. Lumber used shall be of the species and size, and in all respects, equal to or better than that specified.
12. Top chords must be sheathed or purlins provided at spacing shown on design.
13. Bottom chords require lateral bracing at 10 ft. spacing, or less, if no ceiling is installed, unless otherwise noted.
14. Connections not shown are the responsibility of others.
15. Do not cut or alter truss member or plate without prior approval of a professional engineer.
16. Install and load vertically unless indicated otherwise.

© 2004 MiTek®

Job	Truss	Truss Type	Qty	Ply	0 0
8833	H12	ROOF TRUSS	1	1	I10050163
					Job Reference (optional)

Reese Building Components, Inc., Sylvester Ga. 6.200 s Oct 18 2005 MiTek Industries, Inc. Wed Mar 22 15:38:26 2006 Page 1

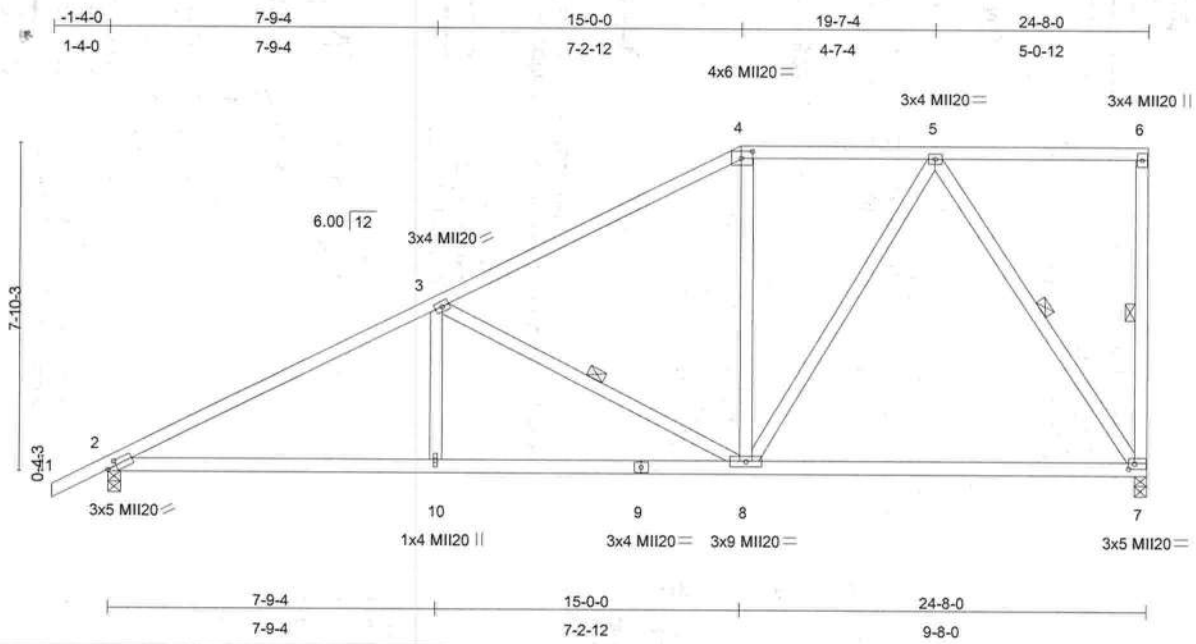

Plate Offsets (X,Y): [2:0-2-10,0-1-8], [4:0-3-4,0-2-0], [7:0-1-12,0-1-8]

LOADING (psf)		SPACING	2-0-0	CSI		DEFL	in	(loc)	l/defl	L/d	PLATES	GRIP
TCLL	20.0	Plates Increase	1.25	TC	0.47	Vert(LL)	0.11	2-10	>999	360	MII20	249/190
TCDL	10.0	Lumber Increase	1.25	BC	0.50	Vert(TL)	-0.27	7-8	>999	240		
BCLL	0.0	Rep Stress Incr	YES	WB	0.35	Horz(TL)	0.05	7	n/a	n/a		
BCDL	10.0	Code FBC2004/TPI2002		(Matrix)							Weight: 143 lb	

LUMBER
TOP CHORD 2 X 4 SYP No.2
BOT CHORD 2 X 4 SYP No.2
WEBS 2 X 4 SYP No.3

BRACING
TOP CHORD Structural wood sheathing directly applied or 4-3-11 oc purlins, except end verticals.
BOT CHORD Rigid ceiling directly applied or 7-7-14 oc bracing.
WEBS 1 Row at midpt 6-7, 3-8, 5-7

REACTIONS (lb/size) 7=972/0-3-8, 2=1066/0-3-8
Max Horz 2=447(load case 3)
Max Uplift7=-405(load case 3), 2=-478(load case 4)

FORCES (lb) - Maximum Compression/Maximum Tension
TOP CHORD 1-2=0/35, 2-3=-1668/591, 3-4=-977/391, 4-5=-780/428, 5-6=-90/114, 6-7=-144/124
BOT CHORD 2-10=-615/1400, 9-10=-615/1400, 8-9=-615/1400, 7-8=-318/504
WEBS 3-10=0/171, 3-8=-703/451, 4-8=0/108, 5-8=-252/543, 5-7=-880/433

NOTES
1) Wind: ASCE 7-02; 110mph (3-second gust); h=15ft; TCDL=5.0psf; BCDL=5.0psf; Category II; Exp C; enclosed; MWFRS gable end zone; cantilever left and right exposed ; end vertical left and right exposed; Lumber DOL=1.33 plate grip DOL=1.33.
2) Provide adequate drainage to prevent water ponding.
3) This truss requires plate inspection per the Tooth Count Method when this truss is chosen for quality assurance inspection.
4) Provide mechanical connection (by others) of truss to bearing plate capable of withstanding 405 lb uplift at joint 7 and 478 lb uplift at joint 2.

LOAD CASE(S) Standard

Scott W. Miller, FL Lic #58316
MiTek Industries, Inc.
14515 North Outer Forty Drive
Suite 300
Chesterfield, MO, 63017
FL Cert.#6634

March 23,2006

WARNING - Verify design parameters and READ NOTES ON THIS AND INCLUDED MITEK REFERENCE PAGE MII-7473 BEFORE USE.
Design valid for use only with MiTek connectors. This design is based only upon parameters shown, and is for an individual building component. Applicability of design paramenters and proper incorporation of component is responsibility of building designer - not truss designer. Bracing shown is for lateral support of individual web members only. Additional temporary bracing to insure stability during construction is the responsibility of the erector. Additional permanent bracing of the overall structure is the responsibility of the building designer. For general guidance regarding fabrication, quality control, storage, delivery, erection and bracing, consult **ANSI/TPI1 Quality Criteria, DSB-89 and BCSI1 Building Component Safety Information** available from Truss Plate Institute, 583 D'Onofrio Drive, Madison, WI 53719.

14515 N. Outer Forty,
Suite #300
Chesterfield, MO 63017

MiTek®

Symbols

PLATE LOCATION AND ORIENTATION

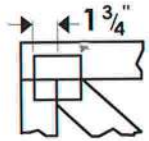

*Center plate on joint unless x, y offsets are indicated. Dimensions are in ft-in-sixteenths. Apply plates to both sides of truss and securely seat.

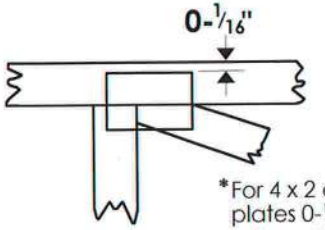

*For 4 x 2 orientation, locate plates 0-1/16" from outside edge of truss.

*This symbol indicates the required direction of slots in connector plates.

***Plate location details available in MiTek 20/20 software or upon request.**

PLATE SIZE

4 x 4

The first dimension is the width perpendicular to slots. Second dimension is the length parallel to slots.

LATERAL BRACING

Indicated by symbol shown and/or by text in the bracing section of the output. Use T, I or Eliminator bracing if indicated.

BEARING

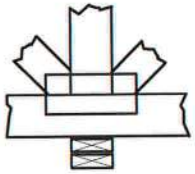

Indicates location where bearings (supports) occur. Icons vary but reaction section indicates joint number where bearings occur.

Industry Standards:

ANSI/TPI1: National Design Specification for Metal Plate Connected Wood Truss Construction.
DSB-89: Design Standard for Bracing.
BCSI1: Building Component Safety Information, Guide to Good Practice for Handling, Installing & Bracing of Metal Plate Connected Wood Trusses

Numbering System

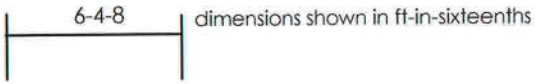

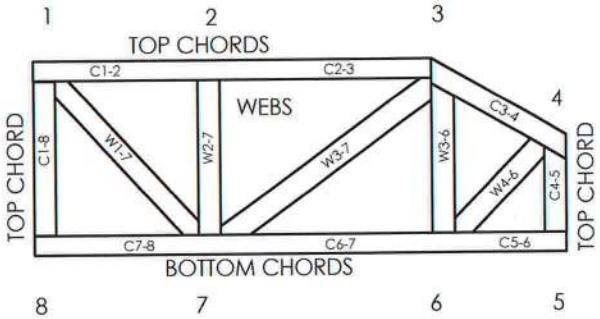

JOINTS ARE GENERALLY NUMBERED/LETTERED CLOCKWISE AROUND THE TRUSS STARTING AT THE JOINT FARTHEST TO THE LEFT.

CHORDS AND WEBS ARE IDENTIFIED BY END JOINT NUMBERS/LETTERS.

CONNECTOR PLATE CODE APPROVALS

BOCA	96-31, 95-43, 96-20-1, 96-67, 84-32
ICBO	4922, 5243, 5363, 3907
SBCCI	9667, 9730, 9604B, 9511, 9432A

MiTek®

TEE-LOK®

MiTek Engineering Reference Sheet: MII-7473

General Safety Notes

Failure to Follow Could Cause Property Damage or Personal Injury

1. Additional stability bracing for truss system, e.g. diagonal or X-bracing, is always required. See BCSI1.
2. Never exceed the design loading shown and never stack materials on inadequately braced trusses.
3. Provide copies of this truss design to the building designer, erection supervisor, property owner and all other interested parties.
4. Cut members to bear tightly against each other.
5. Place plates on each face of truss at each joint and embed fully. Knots and wane at joint locations are regulated by ANSI/TPI1.
6. Design assumes trusses will be suitably protected from the environment in accord with ANSI/TPI1.
7. Unless otherwise noted, moisture content of lumber shall not exceed 19% at time of fabrication.
8. Unless expressly noted, this design is not applicable for use with fire retardant or preservative treated lumber.
9. Camber is a non-structural consideration and is the responsibility of truss fabricator. General practice is to camber for dead load deflection.
10. Plate type, size, orientation and location dimensions shown indicate minimum plating requirements.
11. Lumber used shall be of the species and size, and in all respects, equal to or better than that specified.
12. Top chords must be sheathed or purlins provided at spacing shown on design.
13. Bottom chords require lateral bracing at 10 ft. spacing, or less, if no ceiling is installed, unless otherwise noted.
14. Connections not shown are the responsibility of others.
15. Do not cut or alter truss member or plate without prior approval of a professional engineer.
16. Install and load vertically unless indicated otherwise.

© 2004 MiTek®

Job	Truss	Truss Type	Qty	Ply	0 0
8833	H13	ROOF TRUSS	1	1	I10050164
					Job Reference (optional)

Reese Building Components, Inc., Sylvester Ga.

6.200 s Oct 18 2005 MiTek Industries, Inc. Wed Mar 22 15:38:27 2006 Page 1

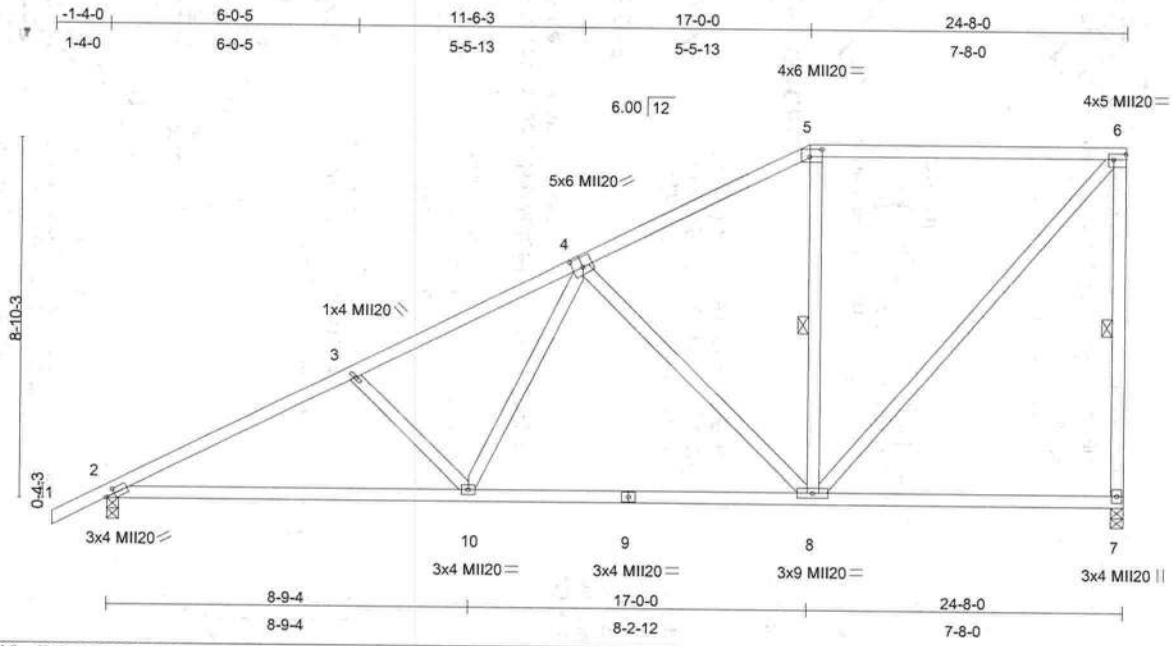

Plate Offsets (X,Y): [2:0-2-10,0-1-8], [4:0-3-0,0-3-0], [5:0-3-8,0-2-4], [6:Edge,0-1-12]

LOADING (psf)		SPACING	2-0-0	CSI		DEFL	in	(loc)	l/defl	L/d	PLATES	GRIP
TCLL	20.0	Plates Increase	1.25	TC	0.69	Vert(LL)	0.08	2-10	>999	360	MII20	249/190
TCDL	10.0	Lumber Increase	1.25	BC	0.43	Vert(TL)	-0.26	2-10	>999	240		
BCLL	0.0	Rep Stress Incr	YES	WB	0.89	Horz(TL)	0.04	7	n/a	n/a		
BCDL	10.0	Code FBC2004/TPI2002		(Matrix)							Weight: 146 lb	

LUMBER
TOP CHORD 2 X 4 SYP No.2
BOT CHORD 2 X 4 SYP No.2
WEBS 2 X 4 SYP No.3

BRACING
TOP CHORD Structural wood sheathing directly applied or 4-6-8 oc purlins, except end verticals.
BOT CHORD Rigid ceiling directly applied or 7-5-6 oc bracing.
WEBS 1 Row at midpt 6-7, 5-8

REACTIONS (lb/size) 7=972/0-3-8, 2=1066/0-3-8
Max Horz 2=504(load case 3)
Max Uplift7=-396(load case 3), 2=-481(load case 4)

FORCES (lb) - Maximum Compression/Maximum Tension
TOP CHORD 1-2=0/35, 2-3=-1709/641, 3-4=-1456/579, 4-5=-761/361, 5-6=-623/387, 6-7=-900/415
BOT CHORD 2-10=-710/1455, 9-10=-460/1034, 8-9=-460/1034, 7-8=-112/119
WEBS 3-10=-326/306, 4-10=-147/468, 4-8=-582/413, 5-8=-122/250, 6-8=-398/911

NOTES
1) Wind: ASCE 7-02; 110mph (3-second gust); h=15ft; TCDL=5.0psf; BCDL=5.0psf; Category II; Exp C; enclosed; MWFRS gable end zone; cantilever left and right exposed ; end vertical left and right exposed; Lumber DOL=1.33 plate grip DOL=1.33.
2) Provide adequate drainage to prevent water ponding.
3) This truss requires plate inspection per the Tooth Count Method when this truss is chosen for quality assurance inspection.
4) Provide mechanical connection (by others) of truss to bearing plate capable of withstanding 396 lb uplift at joint 7 and 481 lb uplift at joint 2.

LOAD CASE(S) Standard

Scott W. Miller, FL Lic #58316
MiTek Industries, Inc.
14515 North Outer Forty Drive
Suite 300
Chesterfield, MO, 63017
FL Cert.#6634

March 23,2006

WARNING - Verify design parameters and READ NOTES ON THIS AND INCLUDED MITEK REFERENCE PAGE MII-7473 BEFORE USE.
Design valid for use only with MiTek connectors. This design is based only upon parameters shown, and is for an individual building component. Applicability of design paramenters and proper incorporation of component is responsibility of building designer - not truss designer. Bracing shown is for lateral support of individual web members only. Additional temporary bracing to insure stability during construction is the responsibility of the erector. Additional permanent bracing of the overall structure is the responsibility of the building designer. For general guidance regarding fabrication, quality control, storage, delivery, erection and bracing, consult **ANSI/TPI1 Quality Criteria, DSB-89 and BCSI1 Building Component Safety Information** available from Truss Plate Institute, 583 D'Onofrio Drive, Madison, WI 53719.

14515 N. Outer Forty,
Suite #300
Chesterfield, MO 63017

Symbols

PLATE LOCATION AND ORIENTATION

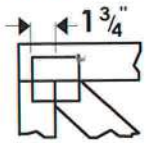

*Center plate on joint unless x, y offsets are indicated. Dimensions are in ft-in-sixteenths. Apply plates to both sides of truss and securely seat.

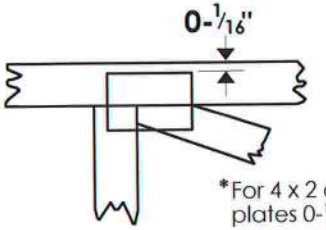

*For 4 x 2 orientation, locate plates 0-1/16" from outside edge of truss.

*This symbol indicates the required direction of slots in connector plates.

***Plate location details available in MiTek 20/20 software or upon request.**

PLATE SIZE

4 x 4

The first dimension is the width perpendicular to slots. Second dimension is the length parallel to slots.

LATERAL BRACING

Indicated by symbol shown and/or by text in the bracing section of the output. Use T, I or Eliminator bracing if indicated.

BEARING

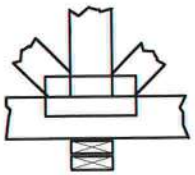

Indicates location where bearings (supports) occur. Icons vary but reaction section indicates joint number where bearings occur.

Industry Standards:

ANSI/TPI1: National Design Specification for Metal Plate Connected Wood Truss Construction.

DSB-89: Design Standard for Bracing.

BCSI1: Building Component Safety Information, Guide to Good Practice for Handling, Installing & Bracing of Metal Plate Connected Wood Trusses

Numbering System

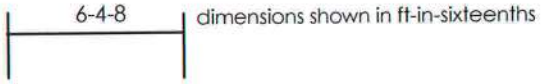

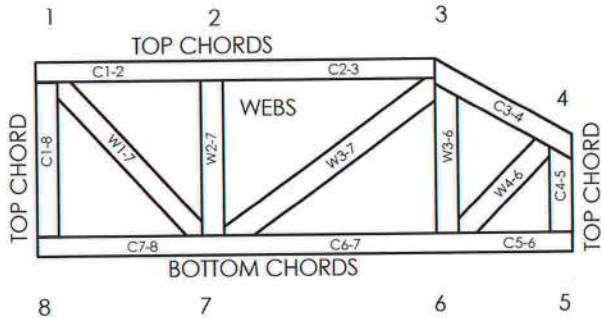

JOINTS ARE GENERALLY NUMBERED/LETTERED CLOCKWISE AROUND THE TRUSS STARTING AT THE JOINT FARTHEST TO THE LEFT.

CHORDS AND WEBS ARE IDENTIFIED BY END JOINT NUMBERS/LETTERS.

CONNECTOR PLATE CODE APPROVALS

BOCA	96-31, 95-43, 96-20-1, 96-67, 84-32
ICBO	4922, 5243, 5363, 3907
SBCCI	9667, 9730, 9604B, 9511, 9432A

MiTek®

TEE-LOK®

MiTek Engineering Reference Sheet: MII-7473

General Safety Notes

Failure to Follow Could Cause Property Damage or Personal Injury

1. Additional stability bracing for truss system, e.g. diagonal or X-bracing, is always required. See BCSI1.
2. Never exceed the design loading shown and never stack materials on inadequately braced trusses.
3. Provide copies of this truss design to the building designer, erection supervisor, property owner and all other interested parties.
4. Cut members to bear tightly against each other.
5. Place plates on each face of truss at each joint and embed fully. Knots and wane at joint locations are regulated by ANSI/TPI1.
6. Design assumes trusses will be suitably protected from the environment in accord with ANSI/TPI1.
7. Unless otherwise noted, moisture content of lumber shall not exceed 19% at time of fabrication.
8. Unless expressly noted, this design is not applicable for use with fire retardant or preservative treated lumber.
9. Camber is a non-structural consideration and is the responsibility of truss fabricator. General practice is to camber for dead load deflection.
10. Plate type, size, orientation and location dimensions shown indicate minimum plating requirements.
11. Lumber used shall be of the species and size, and in all respects, equal to or better than that specified.
12. Top chords must be sheathed or purlins provided at spacing shown on design.
13. Bottom chords require lateral bracing at 10 ft. spacing, or less, if no ceiling is installed, unless otherwise noted.
14. Connections not shown are the responsibility of others.
15. Do not cut or alter truss member or plate without prior approval of a professional engineer.
16. Install and load vertically unless indicated otherwise.

© 2004 MiTek®

Job	Truss	Truss Type	Qty	Ply	0 0
8833	H14	ROOF TRUSS	1	1	I10050165
					Job Reference (optional)

Reese Building Components, Inc., Sylvester Ga.

6.200 s Oct 18 2005 MiTek Industries, Inc. Wed Mar 22 15:38:27 2006 Page 1

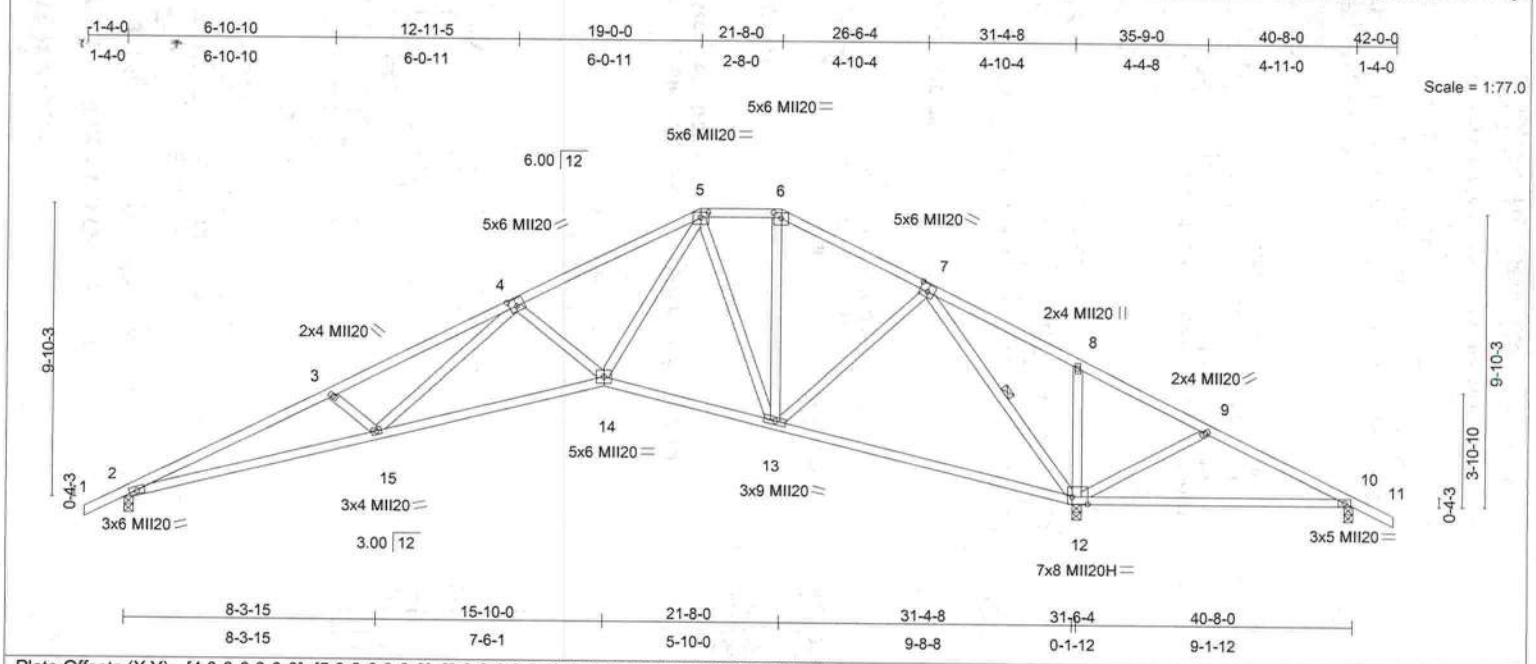

Plate Offsets (X,Y): [4:0-3-0,0-3-0], [5:0-3-0,0-2-0], [6:0-3-0,0-2-0], [7:0-3-0,0-3-0], [12:0-6-0,0-3-0]

LOADING (psf)		SPACING	2-0-0	CSI		DEFL	in	(loc)	l/defl	L/d	PLATES	GRIP
TCLL	20.0	Plates Increase	1.25	TC	0.56	Vert(LL)	0.26	15	>999	360	MII20	249/190
TCDL	10.0	Lumber Increase	1.25	BC	0.73	Vert(TL)	-0.55	14-15	>684	240	MII20H	187/143
BCLL	0.0	Rep Stress Incr	YES	WB	0.91	Horz(TL)	0.29	12	n/a	n/a		
BCDL	10.0	Code FBC2004/TPI2002		(Matrix)							Weight: 217 lb	

LUMBER
TOP CHORD 2 X 4 SYP No.2
BOT CHORD 2 X 4 SYP No.2
WEBS 2 X 4 SYP No.3

BRACING
TOP CHORD Structural wood sheathing directly applied or 3-0-13 oc purlins.
BOT CHORD Rigid ceiling directly applied or 5-1-11 oc bracing.
WEBS 1 Row at midpt 7-12

REACTIONS (lb/size) 2=1089/0-3-8, 12=2757/0-3-8, 10=-439/0-3-8
Max Horz 2=-192(load case 5)
Max Uplift2=-501(load case 4), 12=-937(load case 4), 10=-591(load case 8)
Max Grav 2=1089(load case 1), 12=2757(load case 1), 10=223(load case 4)

FORCES (lb) - Maximum Compression/Maximum Tension
TOP CHORD 1-2=0/33, 2-3=-3195/1284, 3-4=-2895/1188, 4-5=-1656/634, 5-6=-456/329, 6-7=-579/308, 7-8=-605/1938, 8-9=-705/1931, 9-10=-616/1611, 10-11=0/35
BOT CHORD 2-15=-1219/2865, 14-15=-653/1972, 13-14=-36/764, 12-13=-394/320, 10-12=-1368/604
WEBS 3-15=-326/344, 4-15=-411/876, 4-14=-656/503, 5-14=-496/1377, 5-13=-852/381, 6-13=-43/83, 7-13=-235/974, 7-12=-2466/836, 8-12=-280/278, 9-12=-361/284

NOTES
1) Unbalanced roof live loads have been considered for this design.
2) Wind: ASCE 7-02; 110mph (3-second gust); h=15ft; TCDL=5.0psf; BCDL=5.0psf; Category II; Exp C; enclosed; MWFRS gable end zone; cantilever left and right exposed ; end vertical left and right exposed; Lumber DOL=1.33 plate grip DOL=1.33.
3) Provide adequate drainage to prevent water ponding.
4) All plates are MT20 plates unless otherwise indicated.
5) This truss requires plate inspection per the Tooth Count Method when this truss is chosen for quality assurance inspection.
6) Bearing at joint(s) 2 considers parallel to grain value using ANSI/TPI 1 angle to grain formula. Building designer should verify capacity of bearing surface.
7) Provide mechanical connection (by others) of truss to bearing plate capable of withstanding 501 lb uplift at joint 2, 937 lb uplift at joint 12 and 591 lb uplift at joint 10.

LOAD CASE(S) Standard

Scott W. Miller, FL Lic #58316
MiTek Industries, Inc.
14515 North Outer Forty Drive
Suite 300
Chesterfield, MO, 63017
FL Cert.#6634

March 23,2006

WARNING - Verify design parameters and READ NOTES ON THIS AND INCLUDED MITEK REFERENCE PAGE MII-7473 BEFORE USE.
Design valid for use only with MiTek connectors. This design is based only upon parameters shown, and is for an individual building component. Applicability of design paramenters and proper incorporation of component is responsibility of building designer - not truss designer. Bracing shown is for lateral support of individual web members only. Additional temporary bracing to insure stability during construction is the responsibility of the erector. Additional permanent bracing of the overall structure is the responsibility of the building designer. For general guidance regarding fabrication, quality control, storage, delivery, erection and bracing, consult **ANSI/TPI1 Quality Criteria, DSB-89 and BCSI1 Building Component Safety Information** available from Truss Plate Institute, 583 D'Onofrio Drive, Madison, WI 53719.

14515 N. Outer Forty,
Suite #300
Chesterfield, MO 63017

MiTek®

Symbols

PLATE LOCATION AND ORIENTATION

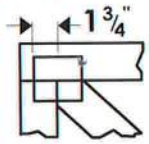

*Center plate on joint unless x, y offsets are indicated. Dimensions are in ft-in-sixteenths. Apply plates to both sides of truss and securely seat.

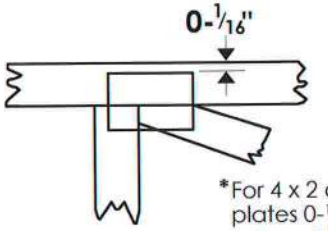

*For 4 x 2 orientation, locate plates 0-1/16" from outside edge of truss.

*This symbol indicates the required direction of slots in connector plates.

***Plate location details available in MiTek 20/20 software or upon request.**

PLATE SIZE

4 x 4

The first dimension is the width perpendicular to slots. Second dimension is the length parallel to slots.

LATERAL BRACING

Indicated by symbol shown and/or by text in the bracing section of the output. Use T, I or Eliminator bracing if indicated.

BEARING

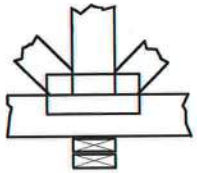

Indicates location where bearings (supports) occur. Icons vary but reaction section indicates joint number where bearings occur.

Industry Standards:

ANSI/TPI1: National Design Specification for Metal Plate Connected Wood Truss Construction.
DSB-89: Design Standard for Bracing.
BCSI1: Building Component Safety Information, Guide to Good Practice for Handling, Installing & Bracing of Metal Plate Connected Wood Trusses

Numbering System

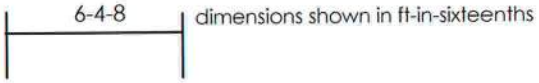

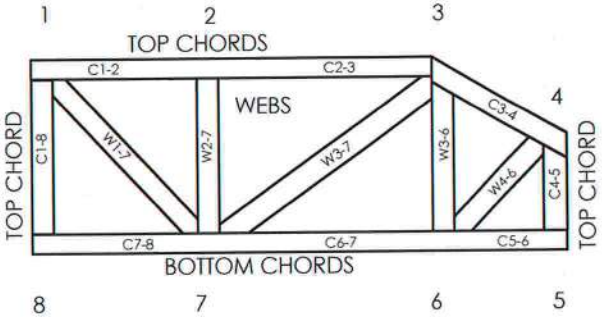

JOINTS ARE GENERALLY NUMBERED/LETTERED CLOCKWISE AROUND THE TRUSS STARTING AT THE JOINT FARTHEST TO THE LEFT.

CHORDS AND WEBS ARE IDENTIFIED BY END JOINT NUMBERS/LETTERS.

CONNECTOR PLATE CODE APPROVALS

BOCA	96-31, 95-43, 96-20-1, 96-67, 84-32
ICBO	4922, 5243, 5363, 3907
SBCCI	9667, 9730, 9604B, 9511, 9432A

MiTek®

TEE-LOK®

MiTek Engineering Reference Sheet: MII-7473

General Safety Notes

Failure to Follow Could Cause Property Damage or Personal Injury

1. Additional stability bracing for truss system, e.g. diagonal or X-bracing, is always required. See BCSI1.
2. Never exceed the design loading shown and never stack materials on inadequately braced trusses.
3. Provide copies of this truss design to the building designer, erection supervisor, property owner and all other interested parties.
4. Cut members to bear tightly against each other.
5. Place plates on each face of truss at each joint and embed fully. Knots and wane at joint locations are regulated by ANSI/TPI1.
6. Design assumes trusses will be suitably protected from the environment in accord with ANSI/TPI1.
7. Unless otherwise noted, moisture content of lumber shall not exceed 19% at time of fabrication.
8. Unless expressly noted, this design is not applicable for use with fire retardant or preservative treated lumber.
9. Camber is a non-structural consideration and is the responsibility of truss fabricator. General practice is to camber for dead load deflection.
10. Plate type, size, orientation and location dimensions shown indicate minimum plating requirements.
11. Lumber used shall be of the species and size, and in all respects, equal to or better than that specified.
12. Top chords must be sheathed or purlins provided at spacing shown on design.
13. Bottom chords require lateral bracing at 10 ft. spacing, or less, if no ceiling is installed, unless otherwise noted.
14. Connections not shown are the responsibility of others.
15. Do not cut or alter truss member or plate without prior approval of a professional engineer.
16. Install and load vertically unless indicated otherwise.

© 2004 MiTek®

Job	Truss	Truss Type	Qty	Ply	0 0
8833	H15	ROOF TRUSS	1	1	I10050166
					Job Reference (optional)

Reese Building Components, Inc., Sylvester Ga.

6.200 s Oct 18 2005 MiTek Industries, Inc. Wed Mar 22 15:38:27 2006 Page 1

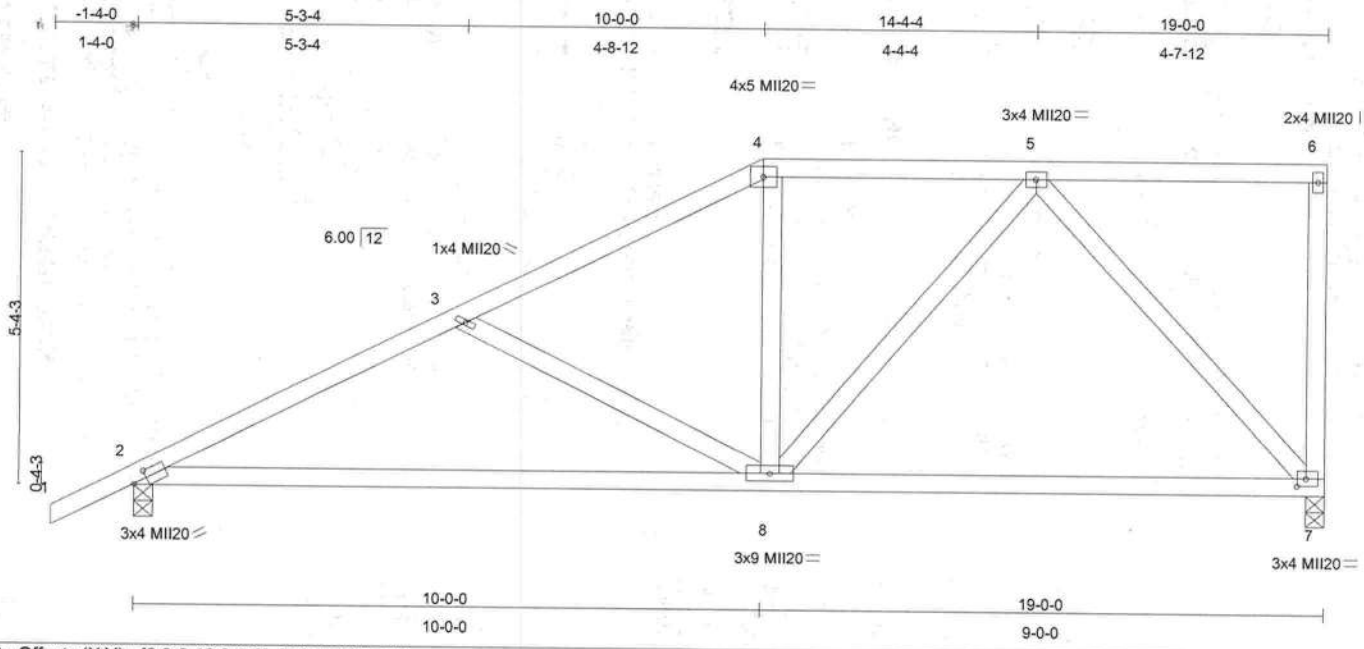

Plate Offsets (X,Y): [2:0-2-10,0-1-8], [7:0-1-12,0-1-8]

LOADING (psf)		SPACING	2-0-0	CSI		DEFL	in	(loc)	l/defl	L/d	PLATES	GRIP
TCLL	20.0	Plates Increase	1.25	TC	0.29	Vert(LL)	0.05	2-8	>999	360	MII20	249/190
TCDL	10.0	Lumber Increase	1.25	BC	0.41	Vert(TL)	-0.32	2-8	>706	240		
BCLL	0.0	Rep Stress Incr	YES	WB	0.59	Horz(TL)	0.03	7	n/a	n/a		
BCDL	10.0	Code FBC2004/TPI2002		(Matrix)							Weight: 102 lb	

LUMBER
TOP CHORD 2 X 4 SYP No.2
BOT CHORD 2 X 4 SYP No.2
WEBS 2 X 4 SYP No.3

BRACING
TOP CHORD Structural wood sheathing directly applied or 5-3-8 oc purlins, except end verticals.
BOT CHORD Rigid ceiling directly applied or 9-0-9 oc bracing.

REACTIONS (lb/size) 7=745/0-3-8, 2=841/0-3-8
Max Horz 2=305(load case 3)
Max Uplift7=-317(load case 3), 2=-387(load case 4)

FORCES (lb) - Maximum Compression/Maximum Tension
TOP CHORD 1-2=0/35, 2-3=-1218/473, 3-4=-889/311, 4-5=-734/334, 5-6=-60/78, 6-7=-128/101
BOT CHORD 2-8=-475/1044, 7-8=-296/511
WEBS 3-8=-352/314, 4-8=0/100, 5-8=-126/349, 5-7=-725/362

NOTES
1) Wind: ASCE 7-02; 110mph (3-second gust); h=15ft; TCDL=5.0psf; BCDL=5.0psf; Category II; Exp C; enclosed; MWFRS gable end zone; cantilever left and right exposed ; end vertical left and right exposed; Lumber DOL=1.33 plate grip DOL=1.33.
2) Provide adequate drainage to prevent water ponding.
3) This truss requires plate inspection per the Tooth Count Method when this truss is chosen for quality assurance inspection.
4) Provide mechanical connection (by others) of truss to bearing plate capable of withstanding 317 lb uplift at joint 7 and 387 lb uplift at joint 2.

LOAD CASE(S) Standard

Scott W. Miller, FL Lic #58316
MiTek Industries, Inc.
14515 North Outer Forty Drive
Suite 300
Chesterfield, MO, 63017
FL Cert.#6634

March 23,2006

WARNING - Verify design parameters and READ NOTES ON THIS AND INCLUDED MITEK REFERENCE PAGE MII-7473 BEFORE USE.
Design valid for use only with MiTek connectors. This design is based only upon parameters shown, and is for an individual building component. Applicability of design paramenters and proper incorporation of component is responsibility of building designer - not truss designer. Bracing shown is for lateral support of individual web members only. Additional temporary bracing to insure stability during construction is the responsibility of the erector. Additional permanent bracing of the overall structure is the responsibility of the building designer. For general guidance regarding fabrication, quality control, storage, delivery, erection and bracing, consult **ANSI/TPI1 Quality Criteria, DSB-89 and BCSI1 Building Component Safety Information** available from Truss Plate Institute, 583 D'Onofrio Drive, Madison, WI 53719.

14515 N. Outer Forty,
Suite #300
Chesterfield, MO 63017

MiTek®

Symbols

PLATE LOCATION AND ORIENTATION

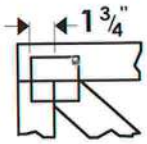

*Center plate on joint unless x, y offsets are indicated. Dimensions are in ft-in-sixteenths. Apply plates to both sides of truss and securely seat.

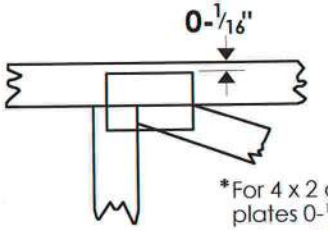

*For 4 x 2 orientation, locate plates 0-1/16" from outside edge of truss.

*This symbol indicates the required direction of slots in connector plates.

***Plate location details available in MiTek 20/20 software or upon request.**

PLATE SIZE

4 x 4

The first dimension is the width perpendicular to slots. Second dimension is the length parallel to slots.

LATERAL BRACING

Indicated by symbol shown and/or by text in the bracing section of the output. Use T, I or Eliminator bracing if indicated.

BEARING

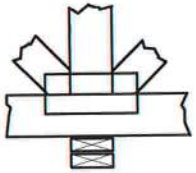

Indicates location where bearings (supports) occur. Icons vary but reaction section indicates joint number where bearings occur.

Industry Standards:

ANSI/TPI1: National Design Specification for Metal Plate Connected Wood Truss Construction.

DSB-89: Design Standard for Bracing.

BCSI1: Building Component Safety Information, Guide to Good Practice for Handling, Installing & Bracing of Metal Plate Connected Wood Trusses

Numbering System

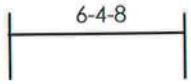

dimensions shown in ft-in-sixteenths

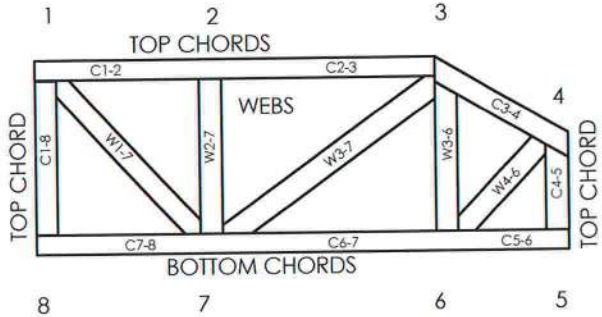

JOINTS ARE GENERALLY NUMBERED/LETTERED CLOCKWISE AROUND THE TRUSS STARTING AT THE JOINT FARTHEST TO THE LEFT.

CHORDS AND WEBS ARE IDENTIFIED BY END JOINT NUMBERS/LETTERS.

CONNECTOR PLATE CODE APPROVALS

BOCA	96-31, 95-43, 96-20-1, 96-67, 84-32
ICBO	4922, 5243, 5363, 3907
SBCCI	9667, 9730, 9604B, 9511, 9432A

MiTek®

TEE-LOK®

MiTek Engineering Reference Sheet: MII-7473

General Safety Notes

Failure to Follow Could Cause Property Damage or Personal Injury

1. Additional stability bracing for truss system, e.g. diagonal or X-bracing, is always required. See BCSI1.
2. Never exceed the design loading shown and never stack materials on inadequately braced trusses.
3. Provide copies of this truss design to the building designer, erection supervisor, property owner and all other interested parties.
4. Cut members to bear tightly against each other.
5. Place plates on each face of truss at each joint and embed fully. Knots and wane at joint locations are regulated by ANSI/TPI1.
6. Design assumes trusses will be suitably protected from the environment in accord with ANSI/TPI1.
7. Unless otherwise noted, moisture content of lumber shall not exceed 19% at time of fabrication.
8. Unless expressly noted, this design is not applicable for use with fire retardant or preservative treated lumber.
9. Camber is a non-structural consideration and is the responsibility of truss fabricator. General practice is to camber for dead load deflection.
10. Plate type, size, orientation and location dimensions shown indicate minimum plating requirements.
11. Lumber used shall be of the species and size, and in all respects, equal to or better than that specified.
12. Top chords must be sheathed or purlins provided at spacing shown on design.
13. Bottom chords require lateral bracing at 10 ft. spacing, or less, if no ceiling is installed, unless otherwise noted.
14. Connections not shown are the responsibility of others.
15. Do not cut or alter truss member or plate without prior approval of a professional engineer.
16. Install and load vertically unless indicated otherwise.

© 2004 MiTek®

Job	Truss	Truss Type	Qty	Ply	0 0
8833	H16	ROOF TRUSS	1	1	I10050167
					Job Reference (optional)

Reese Building Components, Inc., Sylvester Ga.

6.200 s Oct 18 2005 MiTek Industries, Inc. Wed Mar 22 15:38:28 2006 Page 1

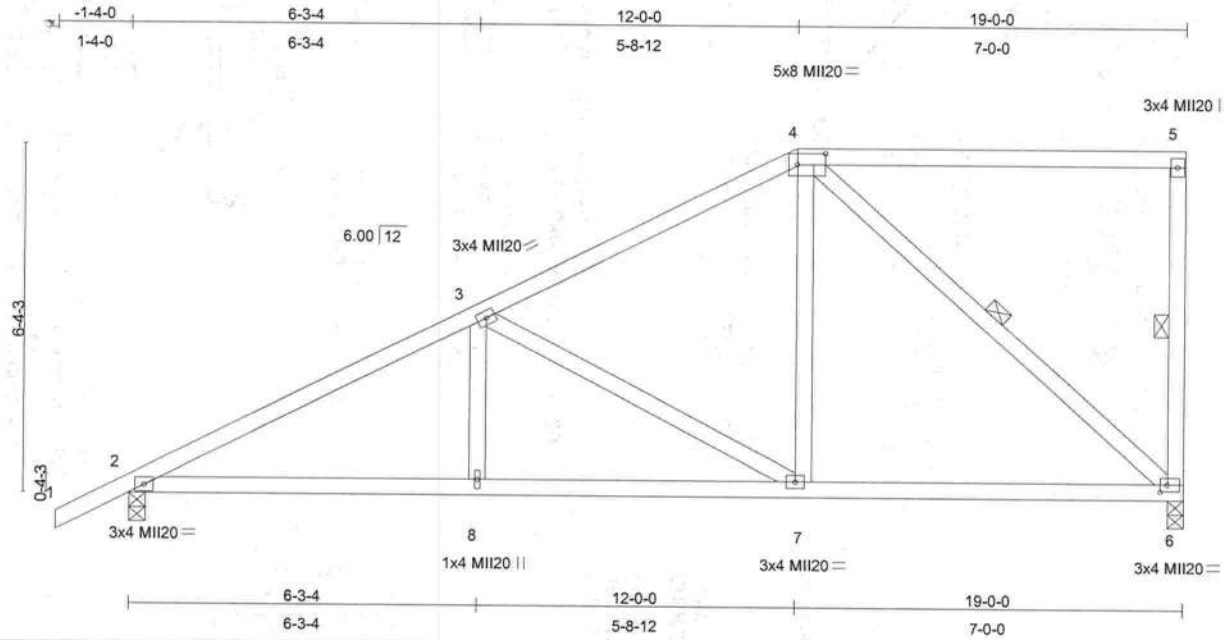

Plate Offsets (X,Y): [4:0-6-0,0-2-8], [6:0-1-8,0-1-8]

LOADING (psf)		SPACING	2-0-0	CSI		DEFL	in	(loc)	l/defl	L/d	PLATES	GRIP
TCLL	20.0	Plates Increase	1.25	TC	0.61	Vert(LL)	0.05	2-8	>999	360	MII20	249/190
TCDL	10.0	Lumber Increase	1.25	BC	0.34	Vert(TL)	-0.12	2-8	>999	240		
BCLL	0.0	Rep Stress Incr	YES	WB	0.41	Horz(TL)	0.03	6	n/a	n/a		
BCDL	10.0	Code FBC2004/TPI2002		(Matrix)							Weight: 105 lb	

LUMBER
TOP CHORD 2 X 4 SYP No.2
BOT CHORD 2 X 4 SYP No.2
WEBS 2 X 4 SYP No.3

BRACING
TOP CHORD Structural wood sheathing directly applied or 5-3-15 oc purlins, except end verticals.
BOT CHORD Rigid ceiling directly applied or 9-2-3 oc bracing.
WEBS 1 Row at midpt 5-6, 4-6

REACTIONS (lb/size) 6=745/0-3-8, 2=841/0-3-8
Max Horz 2=362(load case 3)
Max Uplift6=-309(load case 3), 2=-393(load case 4)

FORCES (lb) - Maximum Compression/Maximum Tension
TOP CHORD 1-2=0/35, 2-3=-1244/433, 3-4=-713/289, 4-5=-51/108, 5-6=-194/163
BOT CHORD 2-8=-453/1034, 7-8=-453/1034, 6-7=-296/581
WEBS 3-8=0/141, 3-7=-525/340, 4-7=-102/369, 4-6=-725/312

NOTES
1) Wind: ASCE 7-02; 110mph (3-second gust); h=15ft; TCDL=5.0psf; BCDL=5.0psf; Category II; Exp C; enclosed; MWFRS gable end zone; cantilever left and right exposed ; end vertical left and right exposed; Lumber DOL=1.33 plate grip DOL=1.33.
2) Provide adequate drainage to prevent water ponding.
3) This truss requires plate inspection per the Tooth Count Method when this truss is chosen for quality assurance inspection.
4) Provide mechanical connection (by others) of truss to bearing plate capable of withstanding 309 lb uplift at joint 6 and 393 lb uplift at joint 2.

LOAD CASE(S) Standard

Scott W. Miller, FL Lic #58316
MiTek Industries, Inc.
14515 North Outer Forty Drive
Suite 300
Chesterfield, MO, 63017
FL Cert.#6634

March 23,2006

WARNING - Verify design parameters and READ NOTES ON THIS AND INCLUDED MITEK REFERENCE PAGE MII-7473 BEFORE USE.
Design valid for use only with MiTek connectors. This design is based only upon parameters shown, and is for an individual building component. Applicability of design paramenters and proper incorporation of component is responsibility of building designer - not truss designer. Bracing shown is for lateral support of individual web members only. Additional temporary bracing to insure stability during construction is the responsibility of the erector. Additional permanent bracing of the overall structure is the responsibility of the building designer. For general guidance regarding fabrication, quality control, storage, delivery, erection and bracing, consult **ANSI/TPI1 Quality Criteria, DSB-89 and BCSI1 Building Component Safety Information** available from Truss Plate Institute, 583 D'Onofrio Drive, Madison, WI 53719.

14515 N. Outer Forty,
Suite #300
Chesterfield, MO 63017

MiTek

Symbols

PLATE LOCATION AND ORIENTATION

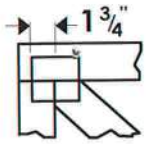

*Center plate on joint unless x, y offsets are indicated. Dimensions are in ft-in-sixteenths. Apply plates to both sides of truss and securely seat.

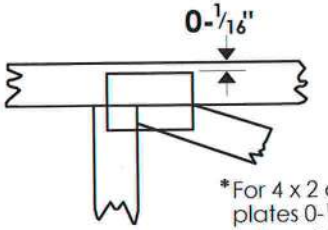

*For 4 x 2 orientation, locate plates 0-1/16" from outside edge of truss.

*This symbol indicates the required direction of slots in connector plates.

***Plate location details available in MiTek 20/20 software or upon request.**

PLATE SIZE

4 x 4

The first dimension is the width perpendicular to slots. Second dimension is the length parallel to slots.

LATERAL BRACING

Indicated by symbol shown and/or by text in the bracing section of the output. Use T, I or Eliminator bracing if indicated.

BEARING

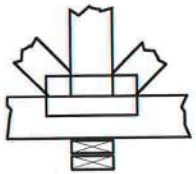

Indicates location where bearings (supports) occur. Icons vary but reaction section indicates joint number where bearings occur.

Industry Standards:

ANSI/TPI1: National Design Specification for Metal Plate Connected Wood Truss Construction.
DSB-89: Design Standard for Bracing.
BCSI1: Building Component Safety Information, Guide to Good Practice for Handling, Installing & Bracing of Metal Plate Connected Wood Trusses

Numbering System

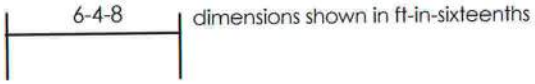

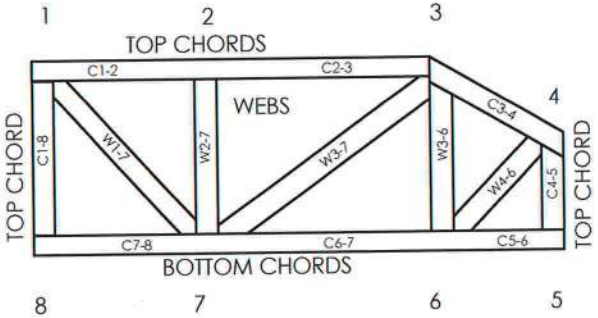

JOINTS ARE GENERALLY NUMBERED/LETTERED CLOCKWISE AROUND THE TRUSS STARTING AT THE JOINT FARTHEST TO THE LEFT.

CHORDS AND WEBS ARE IDENTIFIED BY END JOINT NUMBERS/LETTERS.

CONNECTOR PLATE CODE APPROVALS

BOCA	96-31, 95-43, 96-20-1, 96-67, 84-32
ICBO	4922, 5243, 5363, 3907
SBCCI	9667, 9730, 9604B, 9511, 9432A

MiTek®

TEE-LOK®

MiTek Engineering Reference Sheet: MII-7473

General Safety Notes

Failure to Follow Could Cause Property Damage or Personal Injury

1. Additional stability bracing for truss system, e.g. diagonal or X-bracing, is always required. See BCSI1.
2. Never exceed the design loading shown and never stack materials on inadequately braced trusses.
3. Provide copies of this truss design to the building designer, erection supervisor, property owner and all other interested parties.
4. Cut members to bear tightly against each other.
5. Place plates on each face of truss at each joint and embed fully. Knots and wane at joint locations are regulated by ANSI/TPI1.
6. Design assumes trusses will be suitably protected from the environment in accord with ANSI/TPI1.
7. Unless otherwise noted, moisture content of lumber shall not exceed 19% at time of fabrication.
8. Unless expressly noted, this design is not applicable for use with fire retardant or preservative treated lumber.
9. Camber is a non-structural consideration and is the responsibility of truss fabricator. General practice is to camber for dead load deflection.
10. Plate type, size, orientation and location dimensions shown indicate minimum plating requirements.
11. Lumber used shall be of the species and size, and in all respects, equal to or better than that specified.
12. Top chords must be sheathed or purlins provided at spacing shown on design.
13. Bottom chords require lateral bracing at 10 ft. spacing, or less, if no ceiling is installed, unless otherwise noted.
14. Connections not shown are the responsibility of others.
15. Do not cut or alter truss member or plate without prior approval of a professional engineer.
16. Install and load vertically unless indicated otherwise.

© 2004 MiTek®

Job	Truss	Truss Type	Qty	Ply	0 0
8833	H17	ROOF TRUSS	1	1	I10050168
					Job Reference (optional)

Reese Building Components, Inc., Sylvester Ga.

6.200 s Oct 18 2005 MiTek Industries, Inc. Wed Mar 22 15:38:28 2006 Page 1

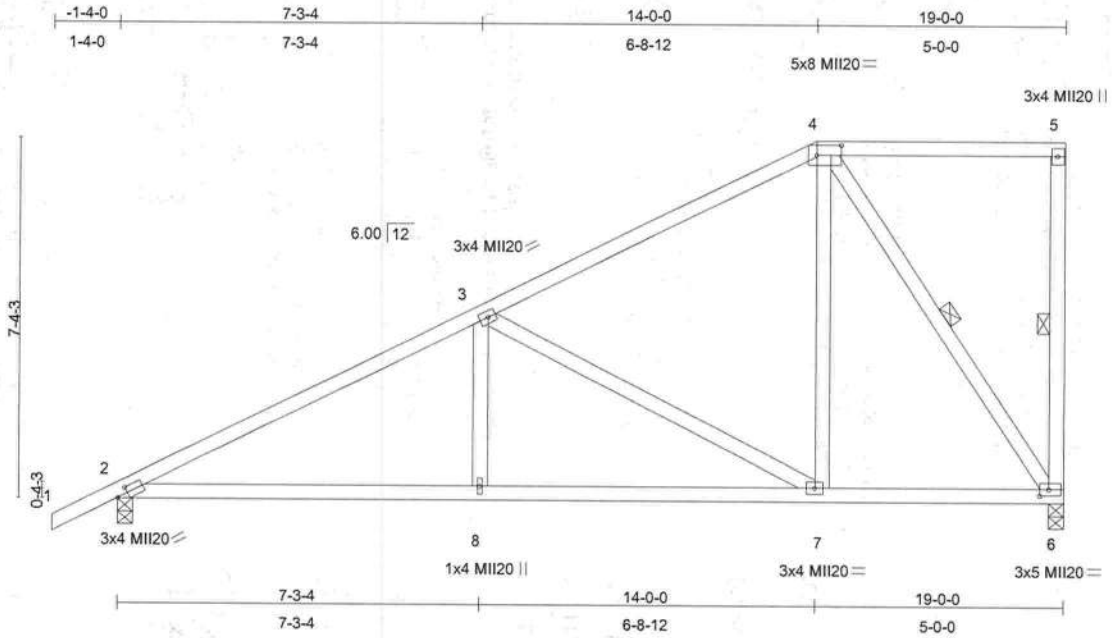

Plate Offsets (X,Y): [2:0-2-10,0-1-8], [4:0-6-0,0-2-8], [6:0-2-4,0-1-8]

LOADING (psf)		SPACING	2-0-0	CSI		DEFL	in	(loc)	l/defl	L/d	PLATES	GRIP
TCLL	20.0	Plates Increase	1.25	TC	0.40	Vert(LL)	0.08	2-8	>999	360	MII20	249/190
TCDL	10.0	Lumber Increase	1.25	BC	0.39	Vert(TL)	-0.17	2-8	>999	240		
BCLL	0.0	Rep Stress Incr	YES	WB	0.71	Horz(TL)	0.03	6	n/a	n/a		
BCDL	10.0	Code FBC2004/TPI2002		(Matrix)							Weight: 110 lb	

LUMBER
TOP CHORD 2 X 4 SYP No.2
BOT CHORD 2 X 4 SYP No.2
WEBS 2 X 4 SYP No.3

BRACING
TOP CHORD Structural wood sheathing directly applied or 5-3-2 oc purlins, except end verticals.
BOT CHORD Rigid ceiling directly applied or 9-0-2 oc bracing.
WEBS 1 Row at midpt 5-6, 4-6

REACTIONS (lb/size) 6=745/0-3-8, 2=841/0-3-8
Max Horz 2=419(load case 3)
Max Uplift6=-299(load case 3), 2=-394(load case 4)

FORCES (lb) - Maximum Compression/Maximum Tension
TOP CHORD 1-2=0/35, 2-3=-1205/417, 3-4=-549/237, 4-5=-75/110, 5-6=-117/127
BOT CHORD 2-8=-453/993, 7-8=-453/993, 6-7=-236/413
WEBS 3-8=0/174, 3-7=-667/416, 4-7=-155/425, 4-6=-710/333

NOTES
1) Wind: ASCE 7-02; 110mph (3-second gust); h=15ft; TCDL=5.0psf; BCDL=5.0psf; Category II; Exp C; enclosed; MWFRS gable end zone; cantilever left and right exposed ; end vertical left and right exposed; Lumber DOL=1.33 plate grip DOL=1.33.
2) Provide adequate drainage to prevent water ponding.
3) This truss requires plate inspection per the Tooth Count Method when this truss is chosen for quality assurance inspection.
4) Provide mechanical connection (by others) of truss to bearing plate capable of withstanding 299 lb uplift at joint 6 and 394 lb uplift at joint 2.

LOAD CASE(S) Standard

Scott W. Miller, FL Lic #58316
MiTek Industries, Inc.
14515 North Outer Forty Drive
Suite 300
Chesterfield, MO, 63017
FL Cert.#6634

March 23,2006

WARNING - Verify design parameters and READ NOTES ON THIS AND INCLUDED MITEK REFERENCE PAGE MII-7473 BEFORE USE.
Design valid for use only with MiTek connectors. This design is based only upon parameters shown, and is for an individual building component. Applicability of design paramenters and proper incorporation of component is responsibility of building designer - not truss designer. Bracing shown is for lateral support of individual web members only. Additional temporary bracing to insure stability during construction is the responsibility of the erector. Additional permanent bracing of the overall structure is the responsibility of the building designer. For general guidance regarding fabrication, quality control, storage, delivery, erection and bracing, consult **ANSI/TPI1 Quality Criteria, DSB-89 and BCSI1 Building Component Safety Information** available from Truss Plate Institute, 583 D'Onofrio Drive, Madison, WI 53719.

14515 N. Outer Forty,
Suite #300
Chesterfield, MO 63017

MiTek

Symbols

PLATE LOCATION AND ORIENTATION

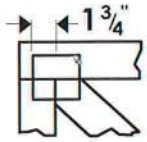

*Center plate on joint unless x, y offsets are indicated. Dimensions are in ft-in-sixteenths. Apply plates to both sides of truss and securely seat.

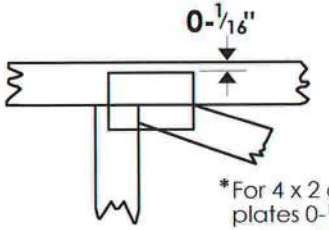

*For 4 x 2 orientation, locate plates 0-1/16" from outside edge of truss.

*This symbol indicates the required direction of slots in connector plates.

***Plate location details available in MiTek 20/20 software or upon request.**

PLATE SIZE

4 x 4

The first dimension is the width perpendicular to slots. Second dimension is the length parallel to slots.

LATERAL BRACING

Indicated by symbol shown and/or by text in the bracing section of the output. Use T, I or Eliminator bracing if indicated.

BEARING

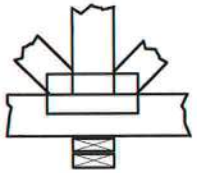

Indicates location where bearings (supports) occur. Icons vary but reaction section indicates joint number where bearings occur.

Industry Standards:

ANSI/TPI1: National Design Specification for Metal Plate Connected Wood Truss Construction.
DSB-89: Design Standard for Bracing.
BCSI1: Building Component Safety Information, Guide to Good Practice for Handling, Installing & Bracing of Metal Plate Connected Wood Trusses

Numbering System

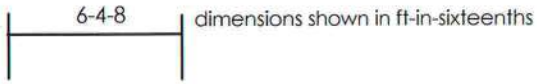

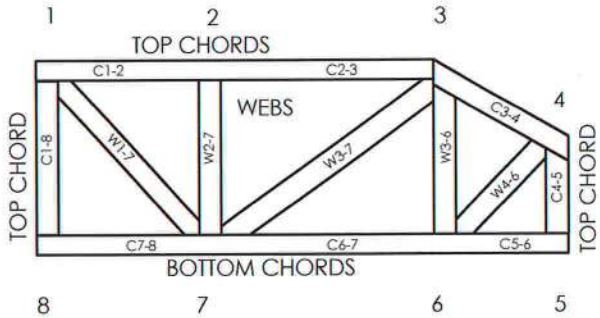

JOINTS ARE GENERALLY NUMBERED/LETTERED CLOCKWISE AROUND THE TRUSS STARTING AT THE JOINT FARTHEST TO THE LEFT.

CHORDS AND WEBS ARE IDENTIFIED BY END JOINT NUMBERS/LETTERS.

CONNECTOR PLATE CODE APPROVALS

BOCA	96-31, 95-43, 96-20-1, 96-67, 84-32
ICBO	4922, 5243, 5363, 3907
SBCCI	9667, 9730, 9604B, 9511, 9432A

MiTek®

TEE-LOK®

MiTek Engineering Reference Sheet: MII-7473

General Safety Notes

Failure to Follow Could Cause Property Damage or Personal Injury

1. Additional stability bracing for truss system, e.g. diagonal or X-bracing, is always required. See BCSI1.
2. Never exceed the design loading shown and never stack materials on inadequately braced trusses.
3. Provide copies of this truss design to the building designer, erection supervisor, property owner and all other interested parties.
4. Cut members to bear tightly against each other.
5. Place plates on each face of truss at each joint and embed fully. Knots and wane at joint locations are regulated by ANSI/TPI1.
6. Design assumes trusses will be suitably protected from the environment in accord with ANSI/TPI1.
7. Unless otherwise noted, moisture content of lumber shall not exceed 19% at time of fabrication.
8. Unless expressly noted, this design is not applicable for use with fire retardant or preservative treated lumber.
9. Camber is a non-structural consideration and is the responsibility of truss fabricator. General practice is to camber for dead load deflection.
10. Plate type, size, orientation and location dimensions shown indicate minimum plating requirements.
11. Lumber used shall be of the species and size, and in all respects, equal to or better than that specified.
12. Top chords must be sheathed or purlins provided at spacing shown on design.
13. Bottom chords require lateral bracing at 10 ft. spacing, or less, if no ceiling is installed, unless otherwise noted.
14. Connections not shown are the responsibility of others.
15. Do not cut or alter truss member or plate without prior approval of a professional engineer.
16. Install and load vertically unless indicated otherwise.

© 2004 MiTek®

Job	Truss	Truss Type	Qty	Ply	0 0
8833	H18	ROOF TRUSS	1	1	I10050169
					Job Reference (optional)

Reese Building Components, Inc., Sylvester Ga.

6.200 s Oct 18 2005 MiTek Industries, Inc. Wed Mar 22 15:38:28 2006 Page 1

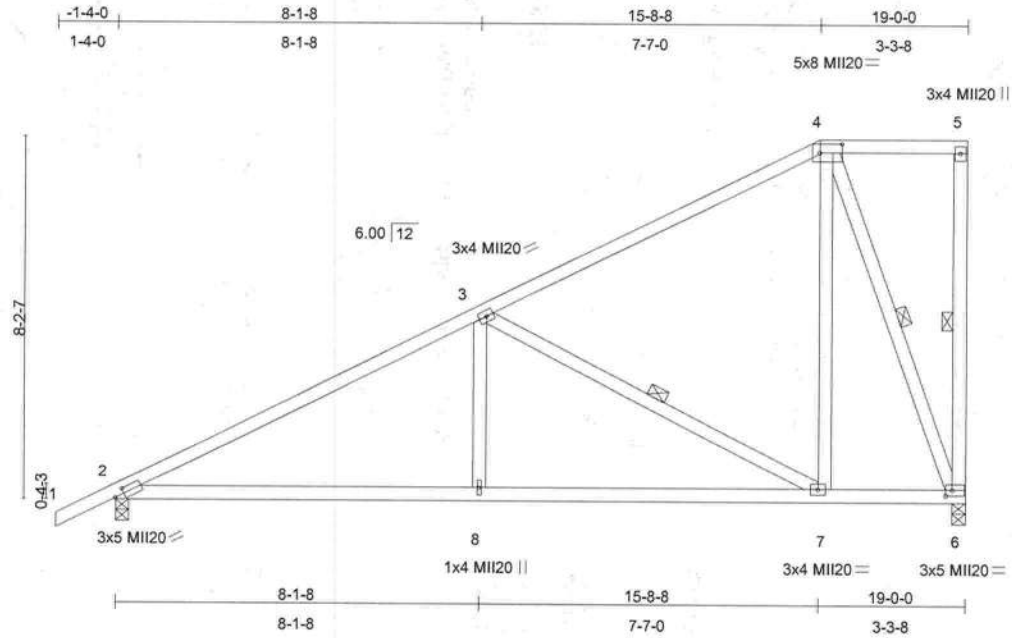

Plate Offsets (X,Y): [2:0-2-10,0-1-8], [4:0-6-0,0-2-8], [6:0-1-12,0-1-8]

LOADING (psf)		SPACING	2-0-0	CSI		DEFL	in	(loc)	l/defl	L/d	PLATES	GRIP
TCLL	20.0	Plates Increase	1.25	TC	0.49	Vert(LL)	0.11	2-8	>999	360	MII20	249/190
TCDL	10.0	Lumber Increase	1.25	BC	0.45	Vert(TL)	-0.25	2-8	>896	240		
BCLL	0.0	Rep Stress Incr	YES	WB	0.29	Horz(TL)	0.03	6	n/a	n/a		
BCDL	10.0	Code FBC2004/TPI2002		(Matrix)							Weight: 115 lb	

LUMBER
TOP CHORD 2 X 4 SYP No.2
BOT CHORD 2 X 4 SYP No.2
WEBS 2 X 4 SYP No.3

BRACING
TOP CHORD Structural wood sheathing directly applied or 5-1-12 oc purlins, except end verticals.
BOT CHORD Rigid ceiling directly applied or 8-11-0 oc bracing.
WEBS 1 Row at midpt 5-6, 3-7, 4-6

REACTIONS (lb/size) 6=745/0-3-8, 2=841/0-3-8
Max Horz 2=467(load case 3)
Max Uplift6=-328(load case 4), 2=-391(load case 4)

FORCES (lb) - Maximum Compression/Maximum Tension
TOP CHORD 1-2=0/35, 2-3=-1166/392, 3-4=-414/183, 4-5=-89/118, 5-6=-30/104
BOT CHORD 2-8=-443/950, 7-8=-443/950, 6-7=-191/279
WEBS 3-8=0/199, 3-7=-769/475, 4-7=-201/470, 4-6=-753/380

NOTES
1) Wind: ASCE 7-02; 110mph (3-second gust); h=15ft; TCDL=5.0psf; BCDL=5.0psf; Category II; Exp C; enclosed; MWFRS gable end zone; cantilever left and right exposed ; end vertical left and right exposed; Lumber DOL=1.33 plate grip DOL=1.33.
2) Provide adequate drainage to prevent water ponding.
3) This truss requires plate inspection per the Tooth Count Method when this truss is chosen for quality assurance inspection.
4) Provide mechanical connection (by others) of truss to bearing plate capable of withstanding 328 lb uplift at joint 6 and 391 lb uplift at joint 2.

LOAD CASE(S) Standard

Scott W. Miller, FL Lic #58316
MiTek Industries, Inc.
14515 North Outer Forty Drive
Suite 300
Chesterfield, MO, 63017
FL Cert.#6634

March 23,2006

WARNING - Verify design parameters and READ NOTES ON THIS AND INCLUDED MITEK REFERENCE PAGE MII-7473 BEFORE USE.
Design valid for use only with MiTek connectors. This design is based only upon parameters shown, and is for an individual building component. Applicability of design paramenters and proper incorporation of component is responsibility of building designer - not truss designer. Bracing shown is for lateral support of individual web members only. Additional temporary bracing to insure stability during construction is the responsibility of the erector. Additional permanent bracing of the overall structure is the responsibility of the building designer. For general guidance regarding fabrication, quality control, storage, delivery, erection and bracing, consult **ANSI/TPI1 Quality Criteria, DSB-89 and BCSI1 Building Component Safety Information** available from Truss Plate Institute, 583 D'Onofrio Drive, Madison, WI 53719.

14515 N. Outer Forty,
Suite #300
Chesterfield, MO 63017

MiTek

Symbols

PLATE LOCATION AND ORIENTATION

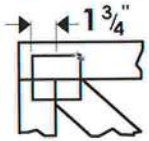

*Center plate on joint unless x, y offsets are indicated. Dimensions are in ft-in-sixteenths. Apply plates to both sides of truss and securely seat.

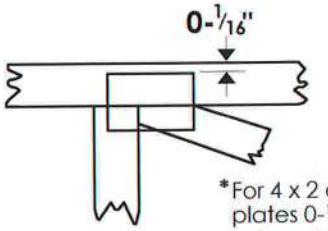

*For 4 x 2 orientation, locate plates 0-1/16" from outside edge of truss.

*This symbol indicates the required direction of slots in connector plates.

***Plate location details available in MiTek 20/20 software or upon request.**

PLATE SIZE

4 x 4

The first dimension is the width perpendicular to slots. Second dimension is the length parallel to slots.

LATERAL BRACING

Indicated by symbol shown and/or by text in the bracing section of the output. Use T, I or Eliminator bracing if indicated.

BEARING

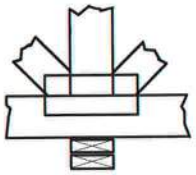

Indicates location where bearings (supports) occur. Icons vary but reaction section indicates joint number where bearings occur.

Industry Standards:

ANSI/TPI1: National Design Specification for Metal Plate Connected Wood Truss Construction.
DSB-89: Design Standard for Bracing.
BCSI1: Building Component Safety Information, Guide to Good Practice for Handling, Installing & Bracing of Metal Plate Connected Wood Trusses

Numbering System

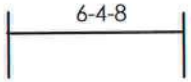

dimensions shown in ft-in-sixteenths

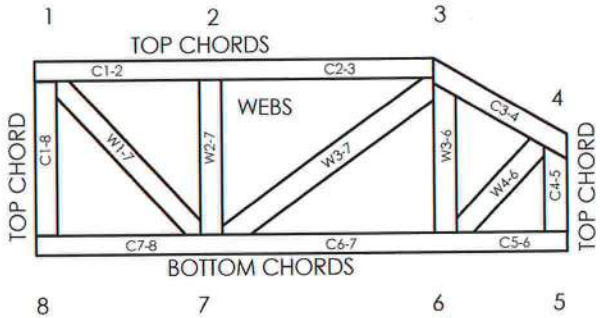

JOINTS ARE GENERALLY NUMBERED/LETTERED CLOCKWISE AROUND THE TRUSS STARTING AT THE JOINT FARTHEST TO THE LEFT.

CHORDS AND WEBS ARE IDENTIFIED BY END JOINT NUMBERS/LETTERS.

CONNECTOR PLATE CODE APPROVALS

BOCA	96-31, 95-43, 96-20-1, 96-67, 84-32
ICBO	4922, 5243, 5363, 3907
SBCCI	9667, 9730, 9604B, 9511, 9432A

MiTek®

TEE-LOK®

MiTek Engineering Reference Sheet: MII-7473

General Safety Notes

Failure to Follow Could Cause Property Damage or Personal Injury

1. Additional stability bracing for truss system, e.g. diagonal or X-bracing, is always required. See BCSI1.
2. Never exceed the design loading shown and never stack materials on inadequately braced trusses.
3. Provide copies of this truss design to the building designer, erection supervisor, property owner and all other interested parties.
4. Cut members to bear tightly against each other.
5. Place plates on each face of truss at each joint and embed fully. Knots and wane at joint locations are regulated by ANSI/TPI1.
6. Design assumes trusses will be suitably protected from the environment in accord with ANSI/TPI1.
7. Unless otherwise noted, moisture content of lumber shall not exceed 19% at time of fabrication.
8. Unless expressly noted, this design is not applicable for use with fire retardant or preservative treated lumber.
9. Camber is a non-structural consideration and is the responsibility of truss fabricator. General practice is to camber for dead load deflection.
10. Plate type, size, orientation and location dimensions shown indicate minimum plating requirements.
11. Lumber used shall be of the species and size, and in all respects, equal to or better than that specified.
12. Top chords must be sheathed or purlins provided at spacing shown on design.
13. Bottom chords require lateral bracing at 10 ft. spacing, or less, if no ceiling is installed, unless otherwise noted.
14. Connections not shown are the responsibility of others.
15. Do not cut or alter truss member or plate without prior approval of a professional engineer.
16. Install and load vertically unless indicated otherwise.

© 2004 MiTek®

Job	Truss	Truss Type	Qty	Ply	0 0
8833	H19	ROOF TRUSS	1	1	I10050170
					Job Reference (optional)

Reese Building Components, Inc., Sylvester Ga.

6.200 s Oct 18 2005 MiTek Industries, Inc. Wed Mar 22 15:38:29 2006 Page 1

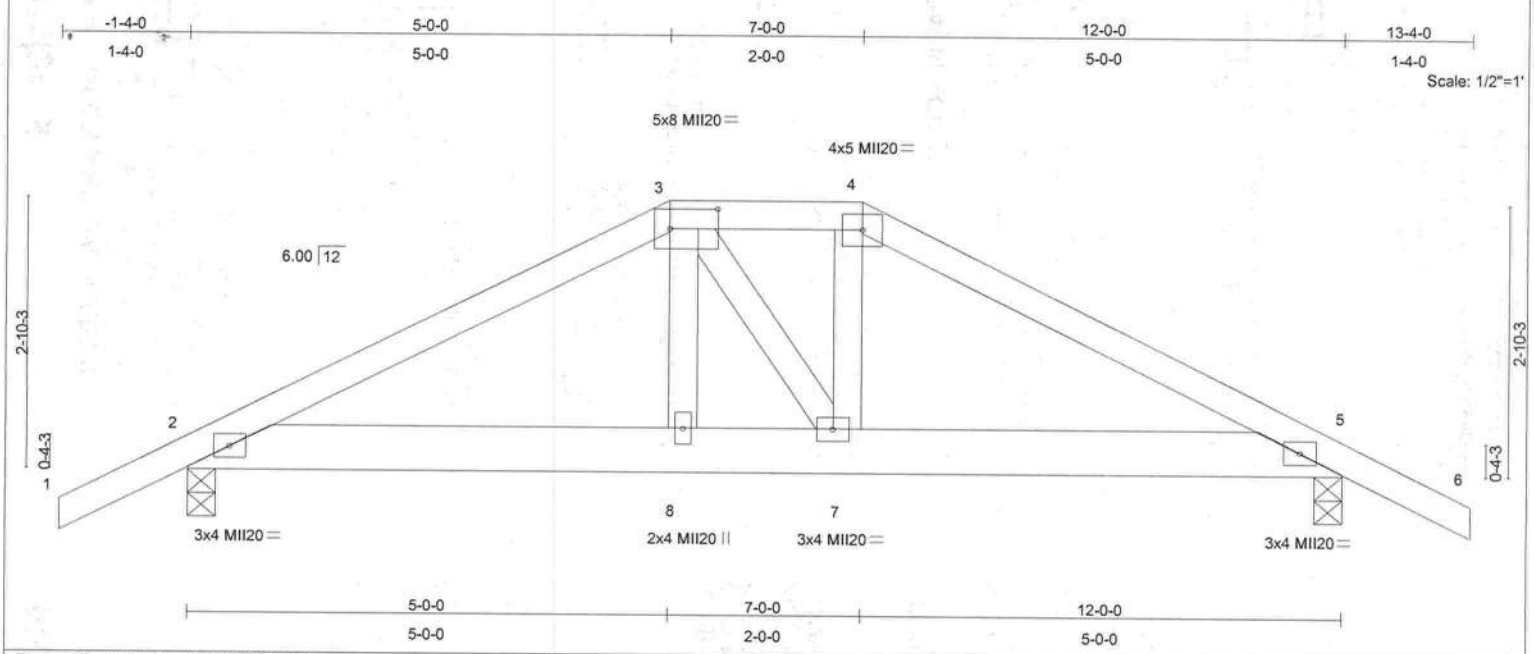

Plate Offsets (X,Y): [3:0-6-0,0-2-8]

LOADING (psf)		SPACING	2-0-0	CSI		DEFL	in	(loc)	l/defl	L/d	PLATES	GRIP
TCLL	20.0	Plates Increase	1.25	TC	0.26	Vert(LL)	0.03	8	>999	360	MII20	249/190
TCDL	10.0	Lumber Increase	1.25	BC	0.24	Vert(TL)	-0.05	8	>999	240		
BCLL	0.0	Rep Stress Incr	NO	WB	0.12	Horz(TL)	0.01	5	n/a	n/a		
BCDL	10.0	Code FBC2004/TPI2002		(Matrix)							Weight: 125 lb	

LUMBER
TOP CHORD 2 X 4 SYP No.2
BOT CHORD 2 X 6 SYP No.2
WEBS 2 X 4 SYP No.3

BRACING
TOP CHORD Structural wood sheathing directly applied or 5-4-9 oc purlins.
BOT CHORD Rigid ceiling directly applied or 10-0-0 oc bracing.

REACTIONS (lb/size) 2=843/0-3-8, 5=843/0-3-8
Max Horz 2=-76(load case 5)
Max Uplift2=-458(load case 4), 5=-458(load case 5)

FORCES (lb) - Maximum Compression/Maximum Tension
TOP CHORD 1-2=0/38, 2-3=-1306/590, 3-4=-1127/586, 4-5=-1311/591, 5-6=0/38
BOT CHORD 2-8=-463/1103, 7-8=-468/1122, 5-7=-441/1108
WEBS 3-8=-116/317, 3-7=-81/97, 4-7=-142/382

NOTES
1) Unbalanced roof live loads have been considered for this design.
2) Wind: ASCE 7-02; 110mph (3-second gust); h=15ft; TCDL=5.0psf; BCDL=5.0psf; Category II; Exp C; enclosed; MWFRS gable end zone; cantilever left and right exposed ; end vertical left and right exposed; Lumber DOL=1.33 plate grip DOL=1.33.
3) Provide adequate drainage to prevent water ponding.
4) This truss requires plate inspection per the Tooth Count Method when this truss is chosen for quality assurance inspection.
5) Provide mechanical connection (by others) of truss to bearing plate capable of withstanding 458 lb uplift at joint 2 and 458 lb uplift at joint 5.
6) Girder carries hip end with 5-0-0 end setback.
7) Hanger(s) or other connection device(s) shall be provided sufficient to support concentrated load(s) 233 lb down and 145 lb up at 7-0-0, and 233 lb down and 145 lb up at 5-0-0 on bottom chord. The design/selection of such connection device(s) is the responsibility of others.
8) In the LOAD CASE(S) section, loads applied to the face of the truss are noted as front (F) or back (B).

LOAD CASE(S) Standard
1) Regular: Lumber Increase=1.25, Plate Increase=1.25
Uniform Loads (plf)
Vert: 1-3=-60, 3-4=-101(F=-41), 4-6=-60, 2-8=-20, 7-8=-34(F=-14), 5-7=-20
Concentrated Loads (lb)
Vert: 8=-233(F) 7=-233(F)

Scott W. Miller, FL Lic #58316
MiTek Industries, Inc.
14515 North Outer Forty Drive
Suite 300
Chesterfield, MO, 63017
FL Cert.#6634

March 23,2006

WARNING - Verify design parameters and READ NOTES ON THIS AND INCLUDED MITEK REFERENCE PAGE MII-7473 BEFORE USE.
Design valid for use only with MiTek connectors. This design is based only upon parameters shown, and is for an individual building component. Applicability of design paramenters and proper incorporation of component is responsibility of building designer - not truss designer. Bracing shown is for lateral support of individual web members only. Additional temporary bracing to insure stability during construction is the responsibility of the erector. Additional permanent bracing of the overall structure is the responsibility of the building designer. For general guidance regarding fabrication, quality control, storage, delivery, erection and bracing, consult **ANSI/TPI1 Quality Criteria, DSB-89 and BCSI1 Building Component Safety Information** available from Truss Plate Institute, 583 D'Onofrio Drive, Madison, WI 53719.

14515 N. Outer Forty,
Suite #300
Chesterfield, MO 63017

MiTek®

Symbols

PLATE LOCATION AND ORIENTATION

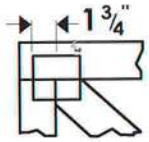

*Center plate on joint unless x, y offsets are indicated. Dimensions are in ft-in-sixteenths. Apply plates to both sides of truss and securely seat.

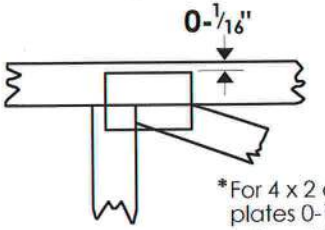

*For 4 x 2 orientation, locate plates 0-1/16" from outside edge of truss.

*This symbol indicates the required direction of slots in connector plates.

***Plate location details available in MiTek 20/20 software or upon request.**

PLATE SIZE

4 x 4

The first dimension is the width perpendicular to slots. Second dimension is the length parallel to slots.

LATERAL BRACING

Indicated by symbol shown and/or by text in the bracing section of the output. Use T, I or Eliminator bracing if indicated.

BEARING

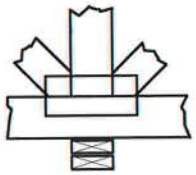

Indicates location where bearings (supports) occur. Icons vary but reaction section indicates joint number where bearings occur.

Industry Standards:

ANSI/TPI1: National Design Specification for Metal Plate Connected Wood Truss Construction.

DSB-89: Design Standard for Bracing.

BCSI1: Building Component Safety Information, Guide to Good Practice for Handling, Installing & Bracing of Metal Plate Connected Wood Trusses

Numbering System

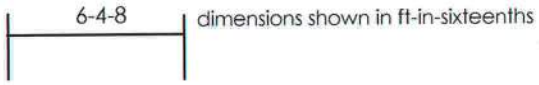

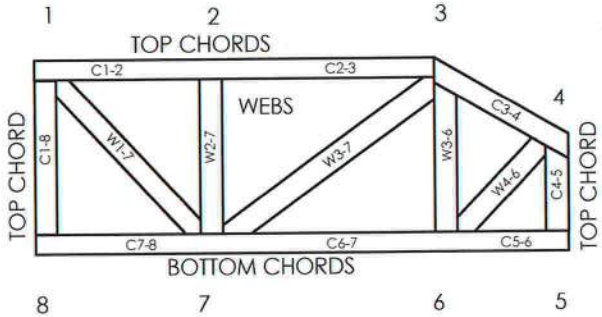

JOINTS ARE GENERALLY NUMBERED/LETTERED CLOCKWISE AROUND THE TRUSS STARTING AT THE JOINT FARTHEST TO THE LEFT.

CHORDS AND WEBS ARE IDENTIFIED BY END JOINT NUMBERS/LETTERS.

CONNECTOR PLATE CODE APPROVALS

BOCA	96-31, 95-43, 96-20-1, 96-67, 84-32
ICBO	4922, 5243, 5363, 3907
SBCCI	9667, 9730, 9604B, 9511, 9432A

MiTek®

TEE-LOK®

MiTek Engineering Reference Sheet: MII-7473

General Safety Notes

Failure to Follow Could Cause Property Damage or Personal Injury

1. Additional stability bracing for truss system, e.g. diagonal or X-bracing, is always required. See BCSI1.
2. Never exceed the design loading shown and never stack materials on inadequately braced trusses.
3. Provide copies of this truss design to the building designer, erection supervisor, property owner and all other interested parties.
4. Cut members to bear tightly against each other.
5. Place plates on each face of truss at each joint and embed fully. Knots and wane at joint locations are regulated by ANSI/TPI1.
6. Design assumes trusses will be suitably protected from the environment in accord with ANSI/TPI1.
7. Unless otherwise noted, moisture content of lumber shall not exceed 19% at time of fabrication.
8. Unless expressly noted, this design is not applicable for use with fire retardant or preservative treated lumber.
9. Camber is a non-structural consideration and is the responsibility of truss fabricator. General practice is to camber for dead load deflection.
10. Plate type, size, orientation and location dimensions shown indicate minimum plating requirements.
11. Lumber used shall be of the species and size, and in all respects, equal to or better than that specified.
12. Top chords must be sheathed or purlins provided at spacing shown on design.
13. Bottom chords require lateral bracing at 10 ft. spacing, or less, if no ceiling is installed, unless otherwise noted.
14. Connections not shown are the responsibility of others.
15. Do not cut or alter truss member or plate without prior approval of a professional engineer.
16. Install and load vertically unless indicated otherwise.

© 2004 MiTek®

Job	Truss	Truss Type	Qty	Ply	0 0
8833	H2	ROOF TRUSS	1	1	I10050171
					Job Reference (optional)

Reese Building Components, Inc., Sylvester Ga.

6.200 s Oct 18 2005 MiTek Industries, Inc. Wed Mar 22 15:38:29 2006 Page 1

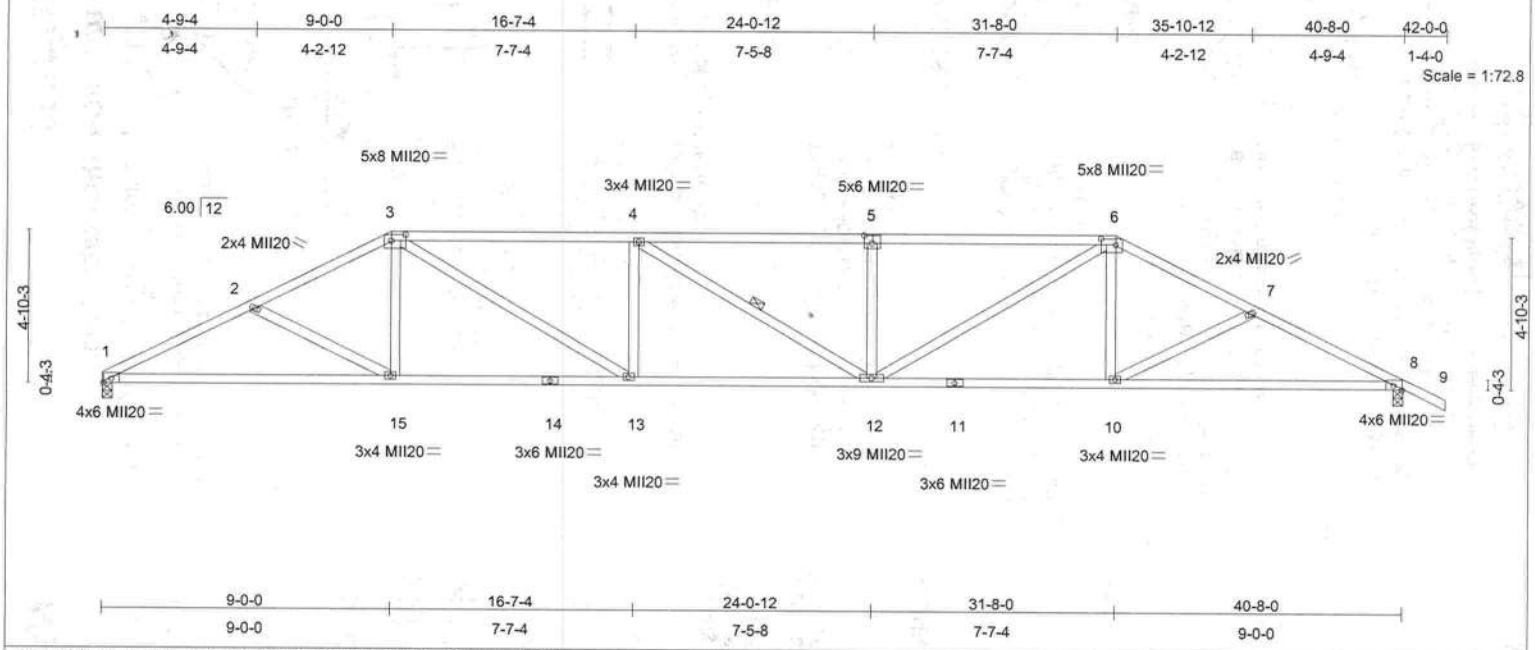

Plate Offsets (X,Y): [3:0-5-8,0-2-4], [5:0-3-0,0-3-0], [6:0-5-8,0-2-4]

LOADING (psf)		SPACING	2-0-0	CSI		DEFL	in	(loc)	l/defl	L/d	PLATES	GRIP
TCLL	20.0	Plates Increase	1.25	TC	0.59	Vert(LL)	0.33	12-13	>999	360	MII20	249/190
TCDL	10.0	Lumber Increase	1.25	BC	0.69	Vert(TL)	-0.74	12-13	>659	240		
BCLL	0.0	Rep Stress Incr	YES	WB	0.78	Horz(TL)	0.20	8	n/a	n/a		
BCDL	10.0	Code FBC2004/TPI2002		(Matrix)							Weight: 204 lb	

LUMBER
TOP CHORD 2 X 4 SYP No.2
BOT CHORD 2 X 4 SYP No.2
WEBS 2 X 4 SYP No.3

BRACING
TOP CHORD Structural wood sheathing directly applied or 2-9-13 oc purlins.
BOT CHORD Rigid ceiling directly applied or 5-6-9 oc bracing.
WEBS 1 Row at midpt 4-12

REACTIONS (lb/size) 1=1613/0-3-8, 8=1705/0-3-8
Max Horz 1=-126(load case 5)
Max Uplift1=-510(load case 4), 8=-614(load case 5)

FORCES (lb) - Maximum Compression/Maximum Tension
TOP CHORD 1-2=-3099/1064, 2-3=-2866/1038, 3-4=-3527/1397, 4-5=-3524/1397, 5-6=-3525/1397, 6-7=-2855/1035, 7-8=-3079/1058, 8-9=0/35
BOT CHORD 1-15=-943/2709, 14-15=-870/2532, 13-14=-870/2532, 12-13=-1297/3527, 11-12=-795/2523, 10-11=-795/2523, 8-10=-865/2686
WEBS 2-15=-212/259, 3-15=-39/281, 3-13=-589/1245, 4-13=-497/375, 4-12=-74/69, 5-12=-461/354, 6-12=-592/1249, 6-10=-24/269, 7-10=-196/238

NOTES
1) Unbalanced roof live loads have been considered for this design.
2) Wind: ASCE 7-02; 110mph (3-second gust); h=15ft; TCDL=5.0psf; BCDL=5.0psf; Category II; Exp C; enclosed; MWFRS gable end zone; cantilever left and right exposed ; end vertical left and right exposed; Lumber DOL=1.33 plate grip DOL=1.33.
3) Provide adequate drainage to prevent water ponding.
4) This truss requires plate inspection per the Tooth Count Method when this truss is chosen for quality assurance inspection.
5) Provide mechanical connection (by others) of truss to bearing plate capable of withstanding 510 lb uplift at joint 1 and 614 lb uplift at joint 8.

LOAD CASE(S) Standard

Scott W. Miller, FL Lic #58316
MiTek Industries, Inc.
14515 North Outer Forty Drive
Suite 300
Chesterfield, MO, 63017
FL Cert.#6634

March 23,2006

WARNING - Verify design parameters and READ NOTES ON THIS AND INCLUDED MITEK REFERENCE PAGE MII-7473 BEFORE USE.
Design valid for use only with MiTek connectors. This design is based only upon parameters shown, and is for an individual building component. Applicability of design paramenters and proper incorporation of component is responsibility of building designer - not truss designer. Bracing shown is for lateral support of individual web members only. Additional temporary bracing to insure stability during construction is the responsibility of the erector. Additional permanent bracing of the overall structure is the responsibility of the building designer. For general guidance regarding fabrication, quality control, storage, delivery, erection and bracing, consult **ANSI/TPI1 Quality Criteria, DSB-89 and BCSI1 Building Component Safety Information** available from Truss Plate Institute, 583 D'Onofrio Drive, Madison, WI 53719.

14515 N. Outer Forty,
Suite #300
Chesterfield, MO 63017

MiTek®

Symbols

PLATE LOCATION AND ORIENTATION

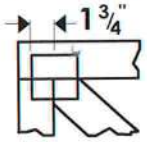

*Center plate on joint unless x, y offsets are indicated. Dimensions are in ft-in-sixteenths. Apply plates to both sides of truss and securely seat.

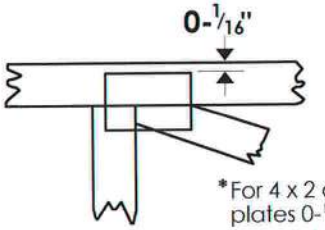

*For 4 x 2 orientation, locate plates 0-1/16" from outside edge of truss.

*This symbol indicates the required direction of slots in connector plates.

***Plate location details available in MiTek 20/20 software or upon request.**

PLATE SIZE

4 x 4 — The first dimension is the width perpendicular to slots. Second dimension is the length parallel to slots.

LATERAL BRACING

Indicated by symbol shown and/or by text in the bracing section of the output. Use T, I or Eliminator bracing if indicated.

BEARING

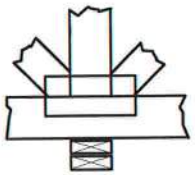

Indicates location where bearings (supports) occur. Icons vary but reaction section indicates joint number where bearings occur.

Industry Standards:

ANSI/TPI1: National Design Specification for Metal Plate Connected Wood Truss Construction.
DSB-89: Design Standard for Bracing.
BCSI1: Building Component Safety Information, Guide to Good Practice for Handling, Installing & Bracing of Metal Plate Connected Wood Trusses

Numbering System

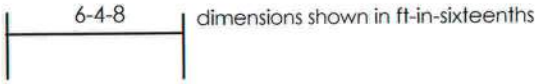

dimensions shown in ft-in-sixteenths

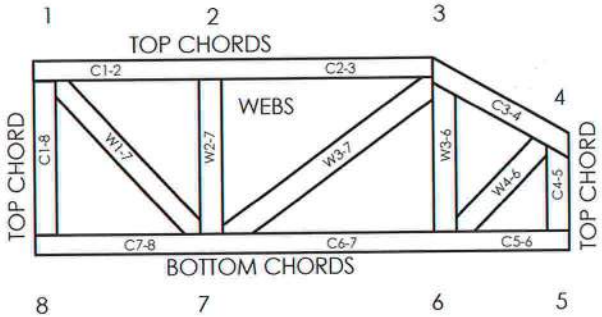

JOINTS ARE GENERALLY NUMBERED/LETTERED CLOCKWISE AROUND THE TRUSS STARTING AT THE JOINT FARTHEST TO THE LEFT.

CHORDS AND WEBS ARE IDENTIFIED BY END JOINT NUMBERS/LETTERS.

CONNECTOR PLATE CODE APPROVALS

BOCA	96-31, 95-43, 96-20-1, 96-67, 84-32
ICBO	4922, 5243, 5363, 3907
SBCCI	9667, 9730, 9604B, 9511, 9432A

MiTek®

TEE-LOK®

MiTek Engineering Reference Sheet: MII-7473

General Safety Notes

Failure to Follow Could Cause Property Damage or Personal Injury

1. Additional stability bracing for truss system, e.g. diagonal or X-bracing, is always required. See BCSI1.
2. Never exceed the design loading shown and never stack materials on inadequately braced trusses.
3. Provide copies of this truss design to the building designer, erection supervisor, property owner and all other interested parties.
4. Cut members to bear tightly against each other.
5. Place plates on each face of truss at each joint and embed fully. Knots and wane at joint locations are regulated by ANSI/TPI1.
6. Design assumes trusses will be suitably protected from the environment in accord with ANSI/TPI1.
7. Unless otherwise noted, moisture content of lumber shall not exceed 19% at time of fabrication.
8. Unless expressly noted, this design is not applicable for use with fire retardant or preservative treated lumber.
9. Camber is a non-structural consideration and is the responsibility of truss fabricator. General practice is to camber for dead load deflection.
10. Plate type, size, orientation and location dimensions shown indicate minimum plating requirements.
11. Lumber used shall be of the species and size, and in all respects, equal to or better than that specified.
12. Top chords must be sheathed or purlins provided at spacing shown on design.
13. Bottom chords require lateral bracing at 10 ft. spacing, or less, if no ceiling is installed, unless otherwise noted.
14. Connections not shown are the responsibility of others.
15. Do not cut or alter truss member or plate without prior approval of a professional engineer.
16. Install and load vertically unless indicated otherwise.

© 2004 MiTek®

Job	Truss	Truss Type	Qty	Ply	0 0
8833	H3	ROOF TRUSS	1	1	I10050172

Job Reference (optional)

Reese Building Components, Inc., Sylvester Ga.

6.200 s Oct 18 2005 MiTek Industries, Inc. Wed Mar 22 15:38:30 2006 Page 1

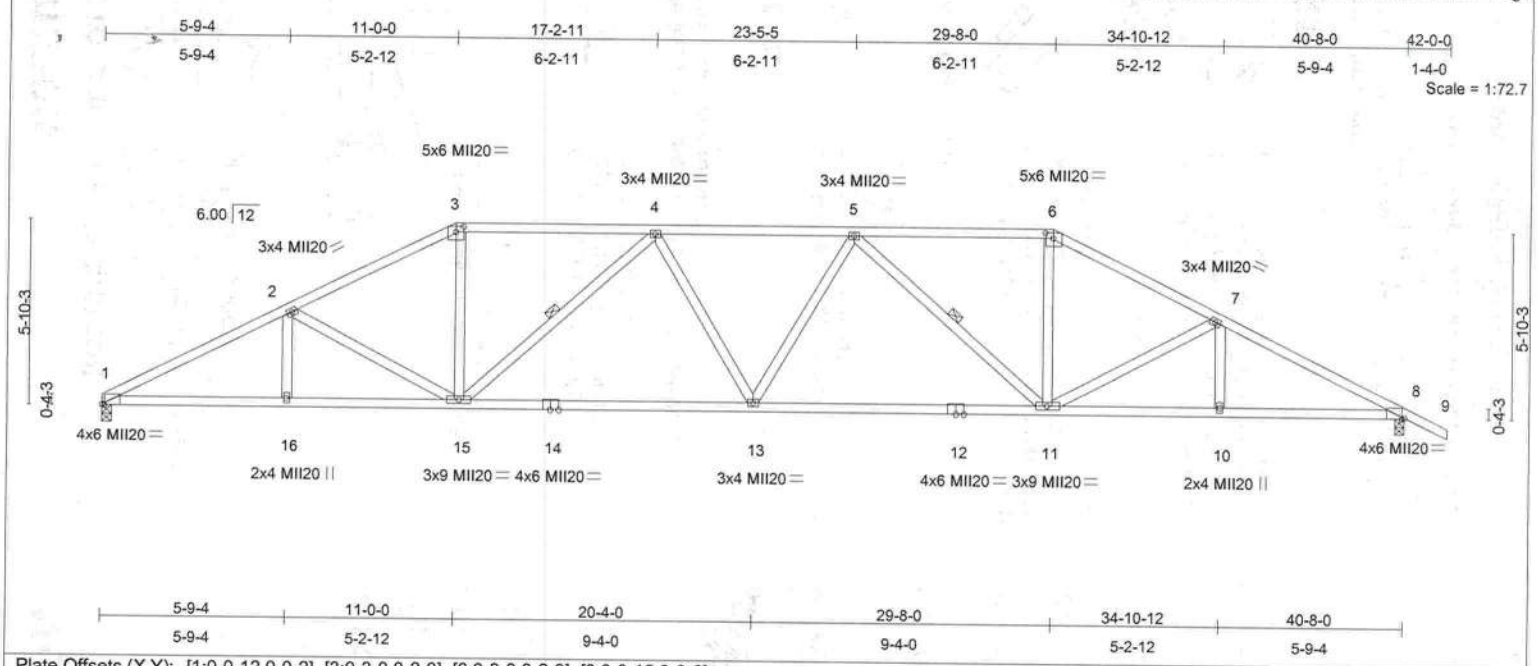

Plate Offsets (X,Y): [1:0-0-12,0-0-2], [3:0-3-0,0-2-0], [6:0-3-0,0-2-0], [8:0-0-12,0-0-2]

LOADING (psf)		SPACING	2-0-0	CSI		DEFL	in	(loc)	l/defl	L/d	PLATES	GRIP
TCLL	20.0	Plates Increase	1.25	TC	0.35	Vert(LL)	0.23	13	>999	360	MII20	249/190
TCDL	10.0	Lumber Increase	1.25	BC	0.68	Vert(TL)	-0.64	13-15	>759	240		
BCLL	0.0	Rep Stress Incr	YES	WB	0.28	Horz(TL)	0.20	8	n/a	n/a		
BCDL	10.0	Code FBC2004/TPI2002		(Matrix)							Weight: 210 lb	

LUMBER
TOP CHORD 2 X 4 SYP No.2
BOT CHORD 2 X 4 SYP No.2
WEBS 2 X 4 SYP No.3

BRACING
TOP CHORD Structural wood sheathing directly applied or 3-3-4 oc purlins.
BOT CHORD Rigid ceiling directly applied or 6-4-11 oc bracing.
WEBS 1 Row at midpt 4-15, 5-11

REACTIONS (lb/size) 1=1613/0-3-8, 8=1705/0-3-8
Max Horz 1=-143(load case 5)
Max Uplift1=-534(load case 4), 8=-638(load case 5)

FORCES (lb) - Maximum Compression/Maximum Tension
TOP CHORD 1-2=-3145/1004, 2-3=-2695/904, 3-4=-2370/851, 4-5=-2936/1034, 5-6=-2366/850, 6-7=-2689/903, 7-8=-3123/971, 8-9=0/35
BOT CHORD 1-16=-877/2727, 15-16=-877/2727, 14-15=-961/2883, 13-14=-961/2883, 12-13=-925/2881, 11-12=-925/2881, 10-11=-744/2705, 8-10=-744/2705
WEBS 2-16=0/113, 2-15=-434/326, 3-15=-192/828, 4-15=-794/411, 4-13=0/173, 5-13=0/176, 5-11=-797/413, 6-11=-191/823, 7-11=-414/300, 7-10=0/103

NOTES
1) Unbalanced roof live loads have been considered for this design.
2) Wind: ASCE 7-02; 110mph (3-second gust); h=15ft; TCDL=5.0psf; BCDL=5.0psf; Category II; Exp C; enclosed; MWFRS gable end zone; cantilever left and right exposed ; end vertical left and right exposed; Lumber DOL=1.33 plate grip DOL=1.33.
3) Provide adequate drainage to prevent water ponding.
4) This truss requires plate inspection per the Tooth Count Method when this truss is chosen for quality assurance inspection.
5) Provide mechanical connection (by others) of truss to bearing plate capable of withstanding 534 lb uplift at joint 1 and 638 lb uplift at joint 8.

LOAD CASE(S) Standard

Scott W. Miller, FL Lic #58316
MiTek Industries, Inc.
14515 North Outer Forty Drive
Suite 300
Chesterfield, MO, 63017
FL Cert.#6634

March 23,2006

WARNING - Verify design parameters and READ NOTES ON THIS AND INCLUDED MITEK REFERENCE PAGE MII-7473 BEFORE USE.
Design valid for use only with MiTek connectors. This design is based only upon parameters shown, and is for an individual building component. Applicability of design paramenters and proper incorporation of component is responsibility of building designer - not truss designer. Bracing shown is for lateral support of individual web members only. Additional temporary bracing to insure stability during construction is the responsibility of the erector. Additional permanent bracing of the overall structure is the responsibility of the building designer. For general guidance regarding fabrication, quality control, storage, delivery, erection and bracing, consult **ANSI/TPI1 Quality Criteria, DSB-89 and BCSI1 Building Component Safety Information** available from Truss Plate Institute, 583 D'Onofrio Drive, Madison, WI 53719.

14515 N. Outer Forty,
Suite #300
Chesterfield, MO 63017

MiTek®

Symbols

PLATE LOCATION AND ORIENTATION

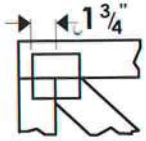

*Center plate on joint unless x, y offsets are indicated. Dimensions are in ft-in-sixteenths. Apply plates to both sides of truss and securely seat.

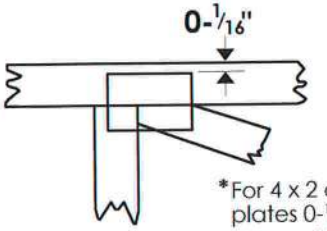

*For 4 x 2 orientation, locate plates 0-1/16" from outside edge of truss.

*This symbol indicates the required direction of slots in connector plates.

***Plate location details available in MiTek 20/20 software or upon request.**

PLATE SIZE

4 x 4

The first dimension is the width perpendicular to slots. Second dimension is the length parallel to slots.

LATERAL BRACING

Indicated by symbol shown and/or by text in the bracing section of the output. Use T, I or Eliminator bracing if indicated.

BEARING

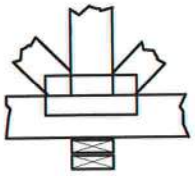

Indicates location where bearings (supports) occur. Icons vary but reaction section indicates joint number where bearings occur.

Industry Standards:

ANSI/TPI1: National Design Specification for Metal Plate Connected Wood Truss Construction.
DSB-89: Design Standard for Bracing.
BCSI1: Building Component Safety Information, Guide to Good Practice for Handling, Installing & Bracing of Metal Plate Connected Wood Trusses

Numbering System

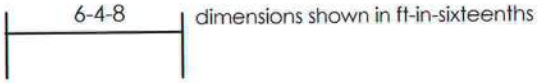

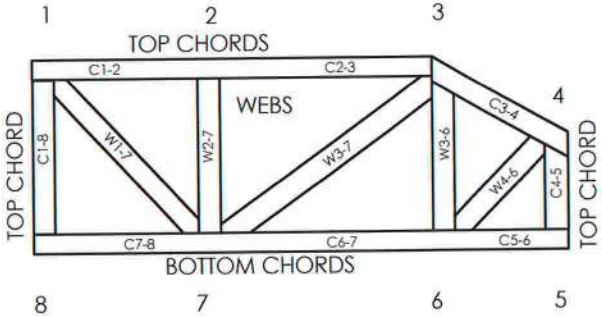

JOINTS ARE GENERALLY NUMBERED/LETTERED CLOCKWISE AROUND THE TRUSS STARTING AT THE JOINT FARTHEST TO THE LEFT.

CHORDS AND WEBS ARE IDENTIFIED BY END JOINT NUMBERS/LETTERS.

CONNECTOR PLATE CODE APPROVALS

BOCA	96-31, 95-43, 96-20-1, 96-67, 84-32
ICBO	4922, 5243, 5363, 3907
SBCCI	9667, 9730, 9604B, 9511, 9432A

MiTek®

TEE-LOK®

MiTek Engineering Reference Sheet: MII-7473

General Safety Notes

Failure to Follow Could Cause Property Damage or Personal Injury

1. Additional stability bracing for truss system, e.g. diagonal or X-bracing, is always required. See BCSI1.
2. Never exceed the design loading shown and never stack materials on inadequately braced trusses.
3. Provide copies of this truss design to the building designer, erection supervisor, property owner and all other interested parties.
4. Cut members to bear tightly against each other.
5. Place plates on each face of truss at each joint and embed fully. Knots and wane at joint locations are regulated by ANSI/TPI1.
6. Design assumes trusses will be suitably protected from the environment in accord with ANSI/TPI1.
7. Unless otherwise noted, moisture content of lumber shall not exceed 19% at time of fabrication.
8. Unless expressly noted, this design is not applicable for use with fire retardant or preservative treated lumber.
9. Camber is a non-structural consideration and is the responsibility of truss fabricator. General practice is to camber for dead load deflection.
10. Plate type, size, orientation and location dimensions shown indicate minimum plating requirements.
11. Lumber used shall be of the species and size, and in all respects, equal to or better than that specified.
12. Top chords must be sheathed or purlins provided at spacing shown on design.
13. Bottom chords require lateral bracing at 10 ft. spacing, or less, if no ceiling is installed, unless otherwise noted.
14. Connections not shown are the responsibility of others.
15. Do not cut or alter truss member or plate without prior approval of a professional engineer.
16. Install and load vertically unless indicated otherwise.

© 2004 MiTek®

Job	Truss	Truss Type	Qty	Ply	0 0
8833	H4	ROOF TRUSS	1	1	I10050173
					Job Reference (optional)

Reese Building Components, Inc., Sylvester Ga.

6.200 s Oct 18 2005 MiTek Industries, Inc. Wed Mar 22 15:38:30 2006 Page 1

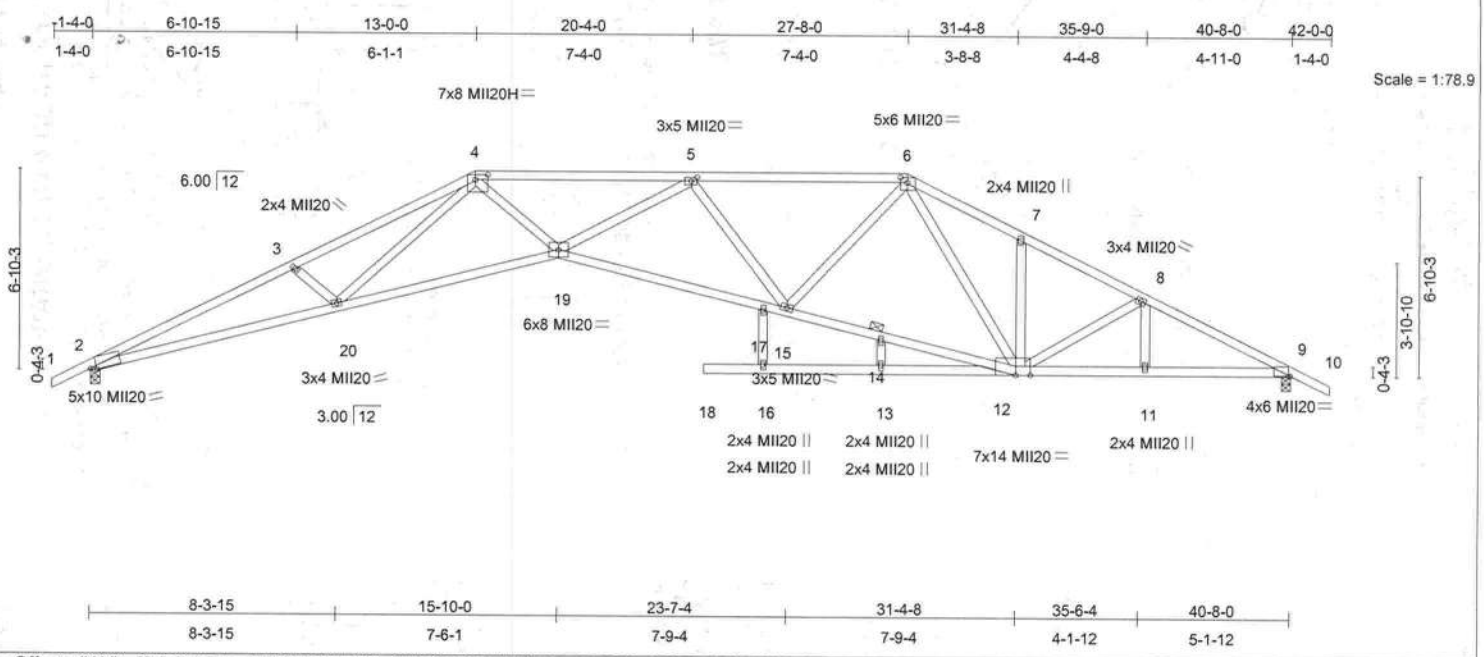

Plate Offsets (X,Y): [2:0-2-7,Edge], [4:0-5-0,0-2-0], [5:0-2-4,0-1-8], [6:0-3-0,0-2-0], [9:0-0-12,0-0-2], [12:0-5-12,0-0-0]

LOADING (psf)		SPACING	2-0-0	CSI		DEFL	in	(loc)	l/defl	L/d	PLATES	GRIP
TCLL	20.0	Plates Increase	1.25	TC	0.96	Vert(LL)	0.58	19-20	>830	360	MII20	249/190
TCDL	10.0	Lumber Increase	1.25	BC	0.93	Vert(TL)	-1.38	19-20	>350	240	MII20H	187/143
BCLL	0.0	Rep Stress Incr	YES	WB	0.93	Horz(TL)	0.79	9	n/a	n/a		
BCDL	10.0	Code FBC2004/TPI2002		(Matrix)							Weight: 221 lb	

LUMBER

TOP CHORD 2 X 4 SYP No.2 *Except*
4-6 2 X 4 SYP No.2D
BOT CHORD 2 X 4 SYP No.2 *Except*
2-19 2 X 4 SYP No.1, 12-19 2 X 4 SYP No.1
WEBS 2 X 4 SYP No.3

BRACING

TOP CHORD Structural wood sheathing directly applied.
BOT CHORD Rigid ceiling directly applied or 2-2-0 oc bracing.
JOINTS 1 Brace at Jt(s): 14

REACTIONS (lb/size) 2=1722/0-3-8, 9=1725/0-3-8
Max Horz 2=-141(load case 5)
Max Uplift2=-649(load case 4), 9=-648(load case 5)

FORCES (lb) - Maximum Compression/Maximum Tension

TOP CHORD 1-2=0/33, 2-3=-5776/1845, 3-4=-5500/1754, 4-5=-5876/1620, 5-6=-3510/964, 6-7=-2771/987, 7-8=-2829/906, 8-9=-3188/996, 9-10=0/35
BOT CHORD 2-20=-1679/5219, 19-20=-1184/4449, 17-19=-1231/4587, 15-17=-1242/4529, 14-15=-566/2653, 12-14=-577/2644, 11-12=-753/2768, 9-11=-753/2768, 16-18=0/0, 13-16=0/0, 12-13=0/0
WEBS 3-20=-273/345, 4-20=-431/778, 4-19=-475/2163, 5-19=-385/1678, 5-15=-1595/656, 6-15=-388/1444, 6-12=-401/232, 7-12=-187/211, 8-12=-334/226, 8-11=0/75, 16-17=0/100, 13-14=0/43

NOTES

1) Unbalanced roof live loads have been considered for this design.
2) Wind: ASCE 7-02; 110mph (3-second gust); h=15ft; TCDL=5.0psf; BCDL=5.0psf; Category II; Exp C; enclosed; MWFRS gable end zone; cantilever left and right exposed ; end vertical left and right exposed; Lumber DOL=1.33 plate grip DOL=1.33.
3) Provide adequate drainage to prevent water ponding.
4) All plates are MT20 plates unless otherwise indicated.
5) This truss requires plate inspection per the Tooth Count Method when this truss is chosen for quality assurance inspection.
6) Bearing at joint(s) 2 considers parallel to grain value using ANSI/TPI 1 angle to grain formula. Building designer should verify capacity of bearing surface.
7) Provide mechanical connection (by others) of truss to bearing plate capable of withstanding 649 lb uplift at joint 2 and 648 lb uplift at joint 9.

LOAD CASE(S) Standard

Scott W. Miller, FL Lic #58316
MiTek Industries, Inc.
14515 North Outer Forty Drive
Suite 300
Chesterfield, MO, 63017
FL Cert.#6634

March 23,2006

WARNING - Verify design parameters and READ NOTES ON THIS AND INCLUDED MITEK REFERENCE PAGE MII-7473 BEFORE USE.
Design valid for use only with MiTek connectors. This design is based only upon parameters shown, and is for an individual building component. Applicability of design paramenters and proper incorporation of component is responsibility of building designer - not truss designer. Bracing shown is for lateral support of individual web members only. Additional temporary bracing to insure stability during construction is the responsibility of the erector. Additional permanent bracing of the overall structure is the responsibility of the building designer. For general guidance regarding fabrication, quality control, storage, delivery, erection and bracing, consult **ANSI/TPI1 Quality Criteria, DSB-89 and BCSI1 Building Component Safety Information** available from Truss Plate Institute, 583 D'Onofrio Drive, Madison, WI 53719.

14515 N. Outer Forty,
Suite #300
Chesterfield, MO 63017

MiTek

Symbols

PLATE LOCATION AND ORIENTATION

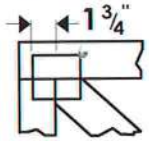

*Center plate on joint unless x, y offsets are indicated. Dimensions are in ft-in-sixteenths. Apply plates to both sides of truss and securely seat.

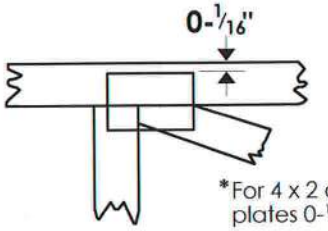

*For 4 x 2 orientation, locate plates 0-1/16" from outside edge of truss.

*This symbol indicates the required direction of slots in connector plates.

***Plate location details available in MiTek 20/20 software or upon request.**

PLATE SIZE

4 x 4 — The first dimension is the width perpendicular to slots. Second dimension is the length parallel to slots.

LATERAL BRACING

Indicated by symbol shown and/or by text in the bracing section of the output. Use T, I or Eliminator bracing if indicated.

BEARING

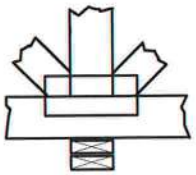

Indicates location where bearings (supports) occur. Icons vary but reaction section indicates joint number where bearings occur.

Industry Standards:

ANSI/TPI1: National Design Specification for Metal Plate Connected Wood Truss Construction.
DSB-89: Design Standard for Bracing.
BCSI1: Building Component Safety Information, Guide to Good Practice for Handling, Installing & Bracing of Metal Plate Connected Wood Trusses

Numbering System

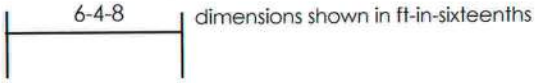

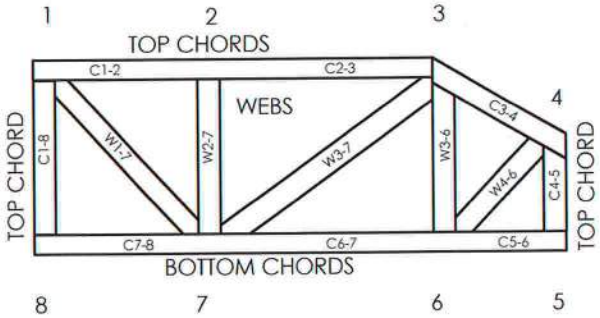

JOINTS ARE GENERALLY NUMBERED/LETTERED CLOCKWISE AROUND THE TRUSS STARTING AT THE JOINT FARTHEST TO THE LEFT.

CHORDS AND WEBS ARE IDENTIFIED BY END JOINT NUMBERS/LETTERS.

CONNECTOR PLATE CODE APPROVALS

BOCA	96-31, 95-43, 96-20-1, 96-67, 84-32
ICBO	4922, 5243, 5363, 3907
SBCCI	9667, 9730, 9604B, 9511, 9432A

MiTek®

TEE-LOK®

MiTek Engineering Reference Sheet: MII-7473

General Safety Notes

Failure to Follow Could Cause Property Damage or Personal Injury

1. Additional stability bracing for truss system, e.g. diagonal or X-bracing, is always required. See BCSI1.
2. Never exceed the design loading shown and never stack materials on inadequately braced trusses.
3. Provide copies of this truss design to the building designer, erection supervisor, property owner and all other interested parties.
4. Cut members to bear tightly against each other.
5. Place plates on each face of truss at each joint and embed fully. Knots and wane at joint locations are regulated by ANSI/TPI1.
6. Design assumes trusses will be suitably protected from the environment in accord with ANSI/TPI1.
7. Unless otherwise noted, moisture content of lumber shall not exceed 19% at time of fabrication.
8. Unless expressly noted, this design is not applicable for use with fire retardant or preservative treated lumber.
9. Camber is a non-structural consideration and is the responsibility of truss fabricator. General practice is to camber for dead load deflection.
10. Plate type, size, orientation and location dimensions shown indicate minimum plating requirements.
11. Lumber used shall be of the species and size, and in all respects, equal to or better than that specified.
12. Top chords must be sheathed or purlins provided at spacing shown on design.
13. Bottom chords require lateral bracing at 10 ft. spacing, or less, if no ceiling is installed, unless otherwise noted.
14. Connections not shown are the responsibility of others.
15. Do not cut or alter truss member or plate without prior approval of a professional engineer.
16. Install and load vertically unless indicated otherwise.

© 2004 MiTek®

Job	Truss	Truss Type	Qty	Ply	0 0
8833	H5	ROOF TRUSS	1	1	I10050174
					Job Reference (optional)

Reese Building Components, Inc., Sylvester Ga.

6.200 s Oct 18 2005 MiTek Industries, Inc. Wed Mar 22 15:38:30 2006 Page 1

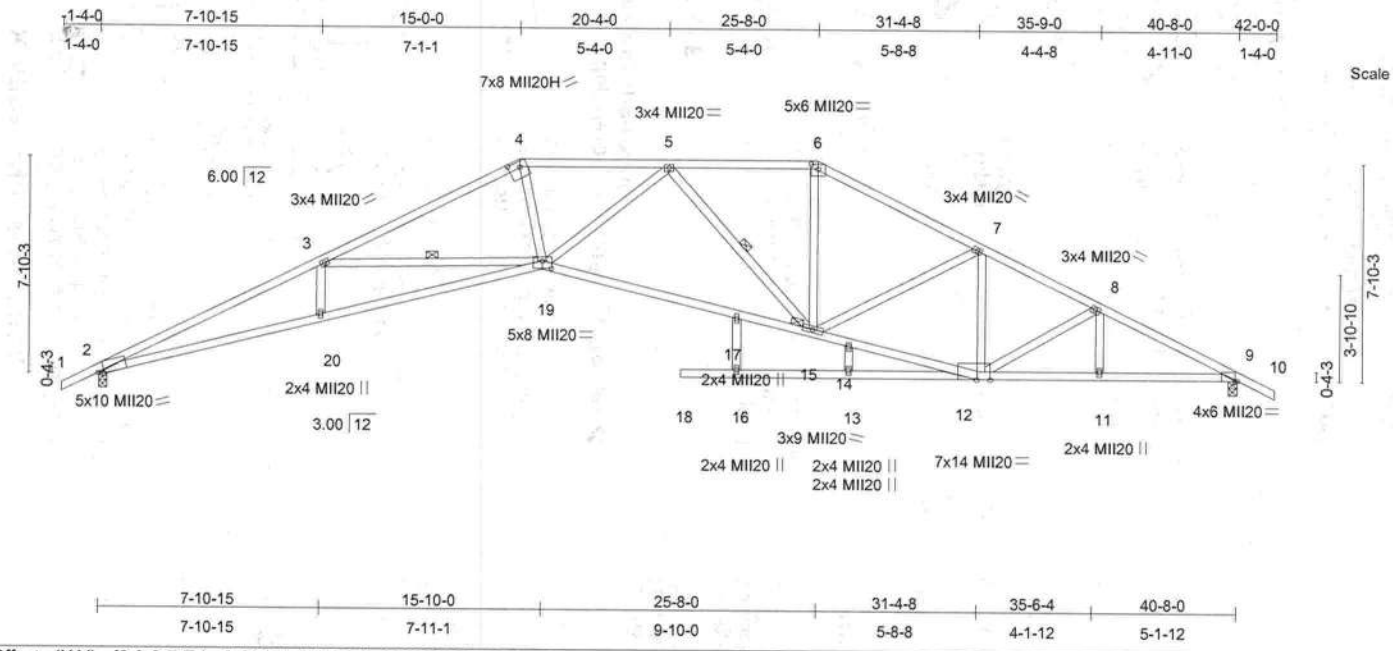

Plate Offsets (X,Y): [2:0-2-7,Edge], [4:0-4-12,0-2-4], [6:0-3-0,0-2-0], [9:0-0-12,0-0-2], [12:0-5-12,0-0-0], [19:0-4-0,0-3-4]

LOADING (psf)		SPACING 2-0-0		CSI		DEFL	in	(loc)	l/defl	L/d	PLATES	GRIP
TCLL	20.0	Plates Increase	1.25	TC	0.89	Vert(LL)	0.50	19-20	>962	360	MII20	249/190
TCDL	10.0	Lumber Increase	1.25	BC	0.97	Vert(TL)	-1.32	18	>366	240	MII20H	187/143
BCLL	0.0	Rep Stress Incr	YES	WB	0.53	Horz(TL)	0.68	9	n/a	n/a		
BCDL	10.0	Code FBC2004/TPI2002		(Matrix)							Weight: 226 lb	

LUMBER

TOP CHORD 2 X 4 SYP SS *Except*
4-6 2 X 4 SYP No.2
BOT CHORD 2 X 4 SYP No.2 *Except*
2-19 2 X 4 SYP No.1, 12-19 2 X 4 SYP No.2D
WEBS 2 X 4 SYP No.3

BRACING

TOP CHORD Structural wood sheathing directly applied.
BOT CHORD Rigid ceiling directly applied or 2-2-0 oc bracing.
WEBS 1 Row at midpt 3-19, 5-15
JOINTS 1 Brace at Jt(s): 15

REACTIONS (lb/size) 2=1722/0-3-8, 9=1725/0-3-8
Max Horz 2=-158(load case 5)
Max Uplift2=-668(load case 4), 9=-667(load case 5)

FORCES (lb) - Maximum Compression/Maximum Tension

TOP CHORD 1-2=0/33, 2-3=-5768/1886, 3-4=-4558/1295, 4-5=-4354/1309, 5-6=-2609/869, 6-7=-2968/889, 7-8=-2825/963, 8-9=-3190/1030, 9-10=0/35
BOT CHORD 2-20=-1721/5208, 19-20=-1720/5208, 17-19=-779/3592, 15-17=-789/3541, 14-15=-602/2528, 12-14=-617/2503, 11-12=-780/2767, 9-11=-780/2767, 16-18=0/0, 13-16=0/0, 12-13=0/0
WEBS 3-20=0/160, 3-19=-1065/737, 4-19=-327/1646, 5-19=-312/1151, 5-15=-1329/488, 6-15=-192/931, 7-15=-103/341, 7-12=-462/133, 8-12=-326/189, 8-11=0/99, 16-17=0/71, 13-14=0/109

NOTES

1) Unbalanced roof live loads have been considered for this design.
2) Wind: ASCE 7-02; 110mph (3-second gust); h=15ft; TCDL=5.0psf; BCDL=5.0psf; Category II; Exp C; enclosed; MWFRS gable end zone; cantilever left and right exposed ; end vertical left and right exposed; Lumber DOL=1.33 plate grip DOL=1.33.
3) Provide adequate drainage to prevent water ponding.
4) All plates are MT20 plates unless otherwise indicated.
5) This truss requires plate inspection per the Tooth Count Method when this truss is chosen for quality assurance inspection.
6) Bearing at joint(s) 2 considers parallel to grain value using ANSI/TPI 1 angle to grain formula. Building designer should verify capacity of bearing surface.
7) Provide mechanical connection (by others) of truss to bearing plate capable of withstanding 668 lb uplift at joint 2 and 667 lb uplift at joint 9.

LOAD CASE(S) Standard

Scott W. Miller, FL Lic #58316
MiTek Industries, Inc.
14515 North Outer Forty Drive
Suite 300
Chesterfield, MO, 63017
FL Cert.#6634

March 23,2006

WARNING - Verify design parameters and READ NOTES ON THIS AND INCLUDED MITEK REFERENCE PAGE MII-7473 BEFORE USE.
Design valid for use only with MiTek connectors. This design is based only upon parameters shown, and is for an individual building component. Applicability of design paramenters and proper incorporation of component is responsibility of building designer - not truss designer. Bracing shown is for lateral support of individual web members only. Additional temporary bracing to insure stability during construction is the responsibility of the erector. Additional permanent bracing of the overall structure is the responsibility of the building designer. For general guidance regarding fabrication, quality control, storage, delivery, erection and bracing, consult **ANSI/TPI1 Quality Criteria, DSB-89 and BCSI1 Building Component Safety Information** available from Truss Plate Institute, 583 D'Onofrio Drive, Madison, WI 53719.

14515 N. Outer Forty,
Suite #300
Chesterfield, MO 63017

MiTek

Symbols

PLATE LOCATION AND ORIENTATION

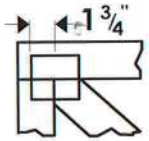

*Center plate on joint unless x, y offsets are indicated. Dimensions are in ft-in-sixteenths. Apply plates to both sides of truss and securely seat.

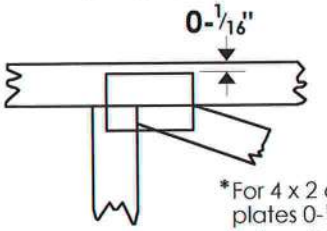

*For 4 x 2 orientation, locate plates 0-1/16" from outside edge of truss.

*This symbol indicates the required direction of slots in connector plates.

***Plate location details available in MiTek 20/20 software or upon request.**

PLATE SIZE

4 x 4

The first dimension is the width perpendicular to slots. Second dimension is the length parallel to slots.

LATERAL BRACING

Indicated by symbol shown and/or by text in the bracing section of the output. Use T, I or Eliminator bracing if indicated.

BEARING

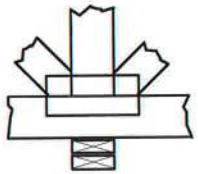

Indicates location where bearings (supports) occur. Icons vary but reaction section indicates joint number where bearings occur.

Industry Standards:

ANSI/TPI1: National Design Specification for Metal Plate Connected Wood Truss Construction.
DSB-89: Design Standard for Bracing.
BCSI1: Building Component Safety Information, Guide to Good Practice for Handling, Installing & Bracing of Metal Plate Connected Wood Trusses

Numbering System

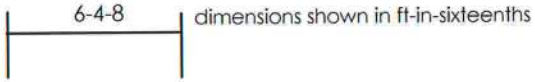

dimensions shown in ft-in-sixteenths

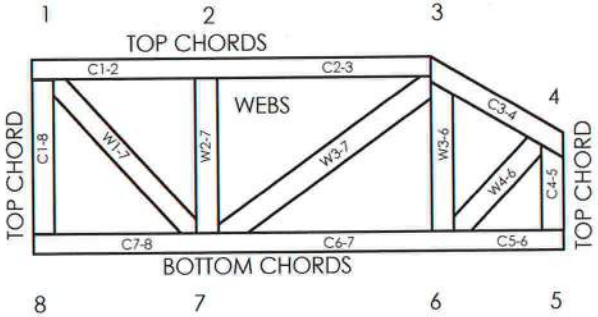

JOINTS ARE GENERALLY NUMBERED/LETTERED CLOCKWISE AROUND THE TRUSS STARTING AT THE JOINT FARTHEST TO THE LEFT.

CHORDS AND WEBS ARE IDENTIFIED BY END JOINT NUMBERS/LETTERS.

CONNECTOR PLATE CODE APPROVALS

BOCA	96-31, 95-43, 96-20-1, 96-67, 84-32
ICBO	4922, 5243, 5363, 3907
SBCCI	9667, 9730, 9604B, 9511, 9432A

MiTek®

TEE-LOK®

MiTek Engineering Reference Sheet: MII-7473

General Safety Notes

Failure to Follow Could Cause Property Damage or Personal Injury

1. Additional stability bracing for truss system, e.g. diagonal or X-bracing, is always required. See BCSI1.
2. Never exceed the design loading shown and never stack materials on inadequately braced trusses.
3. Provide copies of this truss design to the building designer, erection supervisor, property owner and all other interested parties.
4. Cut members to bear tightly against each other.
5. Place plates on each face of truss at each joint and embed fully. Knots and wane at joint locations are regulated by ANSI/TPI1.
6. Design assumes trusses will be suitably protected from the environment in accord with ANSI/TPI1.
7. Unless otherwise noted, moisture content of lumber shall not exceed 19% at time of fabrication.
8. Unless expressly noted, this design is not applicable for use with fire retardant or preservative treated lumber.
9. Camber is a non-structural consideration and is the responsibility of truss fabricator. General practice is to camber for dead load deflection.
10. Plate type, size, orientation and location dimensions shown indicate minimum plating requirements.
11. Lumber used shall be of the species and size, and in all respects, equal to or better than that specified.
12. Top chords must be sheathed or purlins provided at spacing shown on design.
13. Bottom chords require lateral bracing at 10 ft. spacing, or less, if no ceiling is installed, unless otherwise noted.
14. Connections not shown are the responsibility of others.
15. Do not cut or alter truss member or plate without prior approval of a professional engineer.
16. Install and load vertically unless indicated otherwise.

© 2004 MiTek®

Job	Truss	Truss Type	Qty	Ply	0 0
8833	H6	ROOF TRUSS	1	1	I10050175
					Job Reference (optional)

Reese Building Components, Inc., Sylvester Ga.

6.200 s Oct 18 2005 MiTek Industries, Inc. Wed Mar 22 15:38:31 2006 Page 1

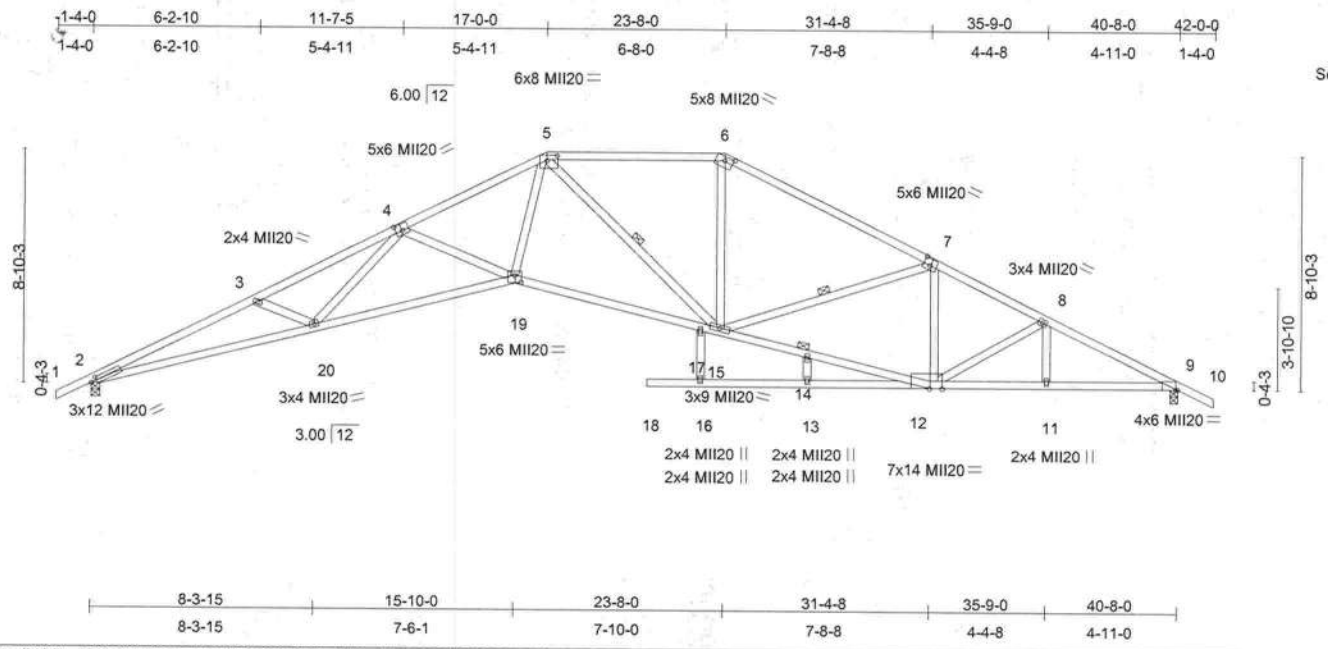

Plate Offsets (X,Y): [2:0-2-9,0-1-8], [4:0-3-0,0-3-0], [5:0-4-12,0-2-4], [6:0-4-0,0-1-15], [7:0-3-0,0-3-0], [9:0-0-12,0-0-2], [12:0-5-12,0-0-0], [19:0-2-12,0-3-4]

LOADING (psf)		SPACING	2-0-0	CSI		DEFL	in	(loc)	l/defl	L/d	PLATES	GRIP
TCLL	20.0	Plates Increase	1.25	TC	0.73	Vert(LL)	0.53	19-20	>907	360	MII20	249/190
TCDL	10.0	Lumber Increase	1.25	BC	0.95	Vert(TL)	-1.18	19-20	>411	240		
BCLL	0.0	Rep Stress Incr	YES	WB	0.78	Horz(TL)	0.68	9	n/a	n/a		
BCDL	10.0	Code FBC2004/TPI2002		(Matrix)							Weight: 229 lb	

LUMBER

TOP CHORD 2 X 4 SYP No.2
BOT CHORD 2 X 4 SYP No.2 *Except*
2-19 2 X 4 SYP No.1
WEBS 2 X 4 SYP No.3

BRACING

TOP CHORD Structural wood sheathing directly applied or 2-1-12 oc purlins.
BOT CHORD Rigid ceiling directly applied or 2-2-0 oc bracing.
WEBS 1 Row at midpt 5-15, 7-15
JOINTS 1 Brace at Jt(s): 14

REACTIONS (lb/size) 2=1722/0-3-8, 9=1725/0-3-8
Max Horz 2=-175(load case 5)
Max Uplift2=-686(load case 4), 9=-684(load case 5)

FORCES (lb) - Maximum Compression/Maximum Tension

TOP CHORD 1-2=0/33, 2-3=-5781/2052, 3-4=-5463/1871, 4-5=-4409/1371, 5-6=-2527/883, 6-7=-2907/883, 7-8=-2851/1010, 8-9=-3176/1061, 9-10=0/35
BOT CHORD 2-20=-1909/5226, 19-20=-1454/4637, 17-19=-796/3404, 15-17=-807/3346, 14-15=-658/2554, 12-14=-669/2545, 11-12=-806/2753, 9-11=-806/2753, 16-18=0/0, 13-16=0/0, 12-13=0/0
WEBS 3-20=-270/330, 4-20=-220/555, 4-19=-660/510, 5-19=-692/2437, 5-15=-1146/376, 6-15=-169/791, 7-15=-91/304, 7-12=-415/176, 8-12=-279/158, 8-11=0/82, 16-17=0/100, 13-14=0/47

NOTES

1) Unbalanced roof live loads have been considered for this design.
2) Wind: ASCE 7-02; 110mph (3-second gust); h=15ft; TCDL=5.0psf; BCDL=5.0psf; Category II; Exp C; enclosed; MWFRS gable end zone; cantilever left and right exposed ; end vertical left and right exposed; Lumber DOL=1.33 plate grip DOL=1.33.
3) Provide adequate drainage to prevent water ponding.
4) This truss requires plate inspection per the Tooth Count Method when this truss is chosen for quality assurance inspection.
5) Bearing at joint(s) 2 considers parallel to grain value using ANSI/TPI 1 angle to grain formula. Building designer should verify capacity of bearing surface.
6) Provide mechanical connection (by others) of truss to bearing plate capable of withstanding 686 lb uplift at joint 2 and 684 lb uplift at joint 9.

LOAD CASE(S) Standard

Scott W. Miller, FL Lic #58316
MiTek Industries, Inc.
14515 North Outer Forty Drive
Suite 300
Chesterfield, MO, 63017
FL Cert.#6634

March 23,2006

WARNING - Verify design parameters and READ NOTES ON THIS AND INCLUDED MITEK REFERENCE PAGE MII-7473 BEFORE USE.
Design valid for use only with MiTek connectors. This design is based only upon parameters shown, and is for an individual building component. Applicability of design paramenters and proper incorporation of component is responsibility of building designer - not truss designer. Bracing shown is for lateral support of individual web members only. Additional temporary bracing to insure stability during construction is the responsibility of the erector. Additional permanent bracing of the overall structure is the responsibility of the building designer. For general guidance regarding fabrication, quality control, storage, delivery, erection and bracing, consult **ANSI/TPI1 Quality Criteria, DSB-89 and BCSI1 Building Component Safety Information** available from Truss Plate Institute, 583 D'Onofrio Drive, Madison, WI 53719.

14515 N. Outer Forty,
Suite #300
Chesterfield, MO 63017

MiTek

Symbols

PLATE LOCATION AND ORIENTATION

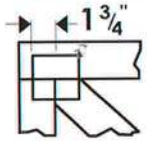

*Center plate on joint unless x, y offsets are indicated. Dimensions are in ft-in-sixteenths. Apply plates to both sides of truss and securely seat.

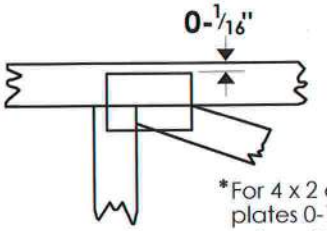

*For 4 x 2 orientation, locate plates 0-1/16" from outside edge of truss.

*This symbol indicates the required direction of slots in connector plates.

***Plate location details available in MiTek 20/20 software or upon request.**

PLATE SIZE

4 x 4

The first dimension is the width perpendicular to slots. Second dimension is the length parallel to slots.

LATERAL BRACING

Indicated by symbol shown and/or by text in the bracing section of the output. Use T, I or Eliminator bracing if indicated.

BEARING

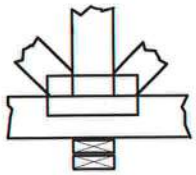

Indicates location where bearings (supports) occur. Icons vary but reaction section indicates joint number where bearings occur.

Industry Standards:

ANSI/TPI1: National Design Specification for Metal Plate Connected Wood Truss Construction.
DSB-89: Design Standard for Bracing.
BCSI1: Building Component Safety Information, Guide to Good Practice for Handling, Installing & Bracing of Metal Plate Connected Wood Trusses

Numbering System

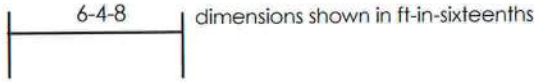

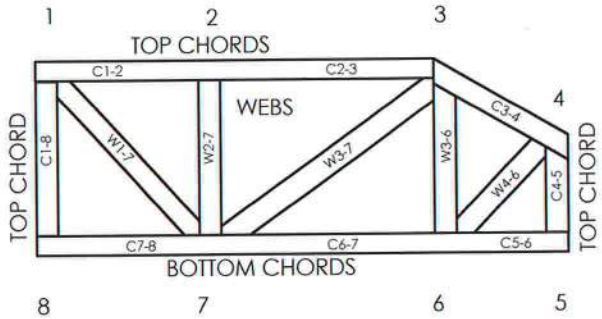

JOINTS ARE GENERALLY NUMBERED/LETTERED CLOCKWISE AROUND THE TRUSS STARTING AT THE JOINT FARTHEST TO THE LEFT.

CHORDS AND WEBS ARE IDENTIFIED BY END JOINT NUMBERS/LETTERS.

CONNECTOR PLATE CODE APPROVALS

BOCA	96-31, 95-43, 96-20-1, 96-67, 84-32
ICBO	4922, 5243, 5363, 3907
SBCCI	9667, 9730, 9604B, 9511, 9432A

MiTek®

TEE-LOK®

MiTek Engineering Reference Sheet: MII-7473

General Safety Notes

Failure to Follow Could Cause Property Damage or Personal Injury

1. Additional stability bracing for truss system, e.g. diagonal or X-bracing, is always required. See BCSI1.
2. Never exceed the design loading shown and never stack materials on inadequately braced trusses.
3. Provide copies of this truss design to the building designer, erection supervisor, property owner and all other interested parties.
4. Cut members to bear tightly against each other.
5. Place plates on each face of truss at each joint and embed fully. Knots and wane at joint locations are regulated by ANSI/TPI1.
6. Design assumes trusses will be suitably protected from the environment in accord with ANSI/TPI1.
7. Unless otherwise noted, moisture content of lumber shall not exceed 19% at time of fabrication.
8. Unless expressly noted, this design is not applicable for use with fire retardant or preservative treated lumber.
9. Camber is a non-structural consideration and is the responsibility of truss fabricator. General practice is to camber for dead load deflection.
10. Plate type, size, orientation and location dimensions shown indicate minimum plating requirements.
11. Lumber used shall be of the species and size, and in all respects, equal to or better than that specified.
12. Top chords must be sheathed or purlins provided at spacing shown on design.
13. Bottom chords require lateral bracing at 10 ft. spacing, or less, if no ceiling is installed, unless otherwise noted.
14. Connections not shown are the responsibility of others.
15. Do not cut or alter truss member or plate without prior approval of a professional engineer.
16. Install and load vertically unless indicated otherwise.

© 2004 MiTek®

Job	Truss	Truss Type	Qty	Ply	0 0
8833	H7	ROOF TRUSS	1	1	I10050176 Job Reference (optional)

Reese Building Components, Inc., Sylvester Ga. 6.200 s Oct 18 2005 MiTek Industries, Inc. Wed Mar 22 15:38:31 2006 Page 1

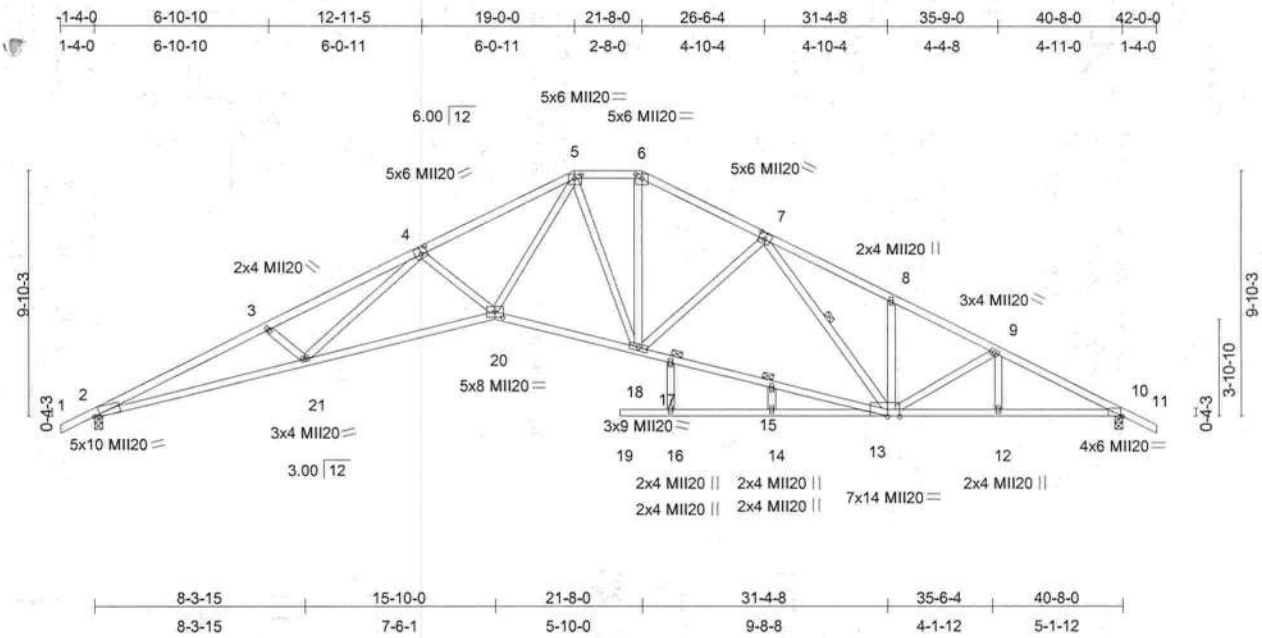

Plate Offsets (X,Y): [2:0-2-7,Edge], [4:0-3-0,0-3-0], [5:0-3-4,0-1-12], [6:0-3-0,0-2-0], [7:0-3-0,0-3-0], [10:0-0-12,0-0-2], [13:0-5-12,Edge], [20:0-4-0,0-2-12]

LOADING (psf)		SPACING	2-0-0	CSI		DEFL	in	(loc)	l/defl	L/d	PLATES	GRIP
TCLL	20.0	Plates Increase	1.25	TC	0.94	Vert(LL)	0.56	20-21	>863	360	MII20	249/190
TCDL	10.0	Lumber Increase	1.25	BC	0.92	Vert(TL)	-1.24	20-21	>391	240		
BCLL	0.0	Rep Stress Incr	YES	WB	0.82	Horz(TL)	0.68	10	n/a	n/a		
BCDL	10.0	Code FBC2004/TPI2002		(Matrix)							Weight: 240 lb	

LUMBER
TOP CHORD 2 X 4 SYP No.2
BOT CHORD 2 X 4 SYP No.2 *Except*
2-20 2 X 4 SYP No.1
WEBS 2 X 4 SYP No.3

BRACING
TOP CHORD Structural wood sheathing directly applied.
BOT CHORD Rigid ceiling directly applied or 2-2-0 oc bracing.
WEBS 1 Row at midpt 7-13
JOINTS 1 Brace at Jt(s): 17, 15

REACTIONS (lb/size) 2=1722/0-3-8, 10=1725/0-3-8
Max Horz 2=-192(load case 5)
Max Uplift2=-701(load case 4), 10=-699(load case 5)

FORCES (lb) - Maximum Compression/Maximum Tension
TOP CHORD 1-2=0/33, 2-3=-5782/2100, 3-4=-5504/2010, 4-5=-4378/1492, 5-6=-2376/873, 6-7=-2705/930, 7-8=-2817/1116, 8-9=-2852/1018, 9-10=-3176/1107, 10-11=0/35
BOT CHORD 2-21=-1963/5226, 20-21=-1437/4456, 18-20=-613/2670, 17-18=-619/2643, 15-17=-630/2608, 13-15=-636/2612, 12-13=-850/2756, 10-12=-850/2756, 16-19=0/0, 14-16=0/0, 13-14=0/0
WEBS 3-21=-278/325, 4-21=-377/791, 4-20=-635/494, 5-20=-869/2566, 5-18=-696/316, 6-18=-342/972, 7-18=-300/390, 7-13=-191/81, 8-13=-259/251, 9-13=-300/218, 9-12=0/58, 16-17=0/122, 14-15=-19/25

NOTES
1) Unbalanced roof live loads have been considered for this design.
2) Wind: ASCE 7-02; 110mph (3-second gust); h=15ft; TCDL=5.0psf; BCDL=5.0psf; Category II; Exp C; enclosed; MWFRS gable end zone; cantilever left and right exposed ; end vertical left and right exposed; Lumber DOL=1.33 plate grip DOL=1.33.
3) Provide adequate drainage to prevent water ponding.
4) This truss requires plate inspection per the Tooth Count Method when this truss is chosen for quality assurance inspection.
5) Bearing at joint(s) 2 considers parallel to grain value using ANSI/TPI 1 angle to grain formula. Building designer should verify capacity of bearing surface.
6) Provide mechanical connection (by others) of truss to bearing plate capable of withstanding 701 lb uplift at joint 2 and 699 lb uplift at joint 10.

LOAD CASE(S) Standard

Scott W. Miller, FL Lic #58316
MiTek Industries, Inc.
14515 North Outer Forty Drive
Suite 300
Chesterfield, MO, 63017
FL Cert.#6634

March 23,2006

WARNING - Verify design parameters and READ NOTES ON THIS AND INCLUDED MITEK REFERENCE PAGE MII-7473 BEFORE USE.
Design valid for use only with MiTek connectors. This design is based only upon parameters shown, and is for an individual building component. Applicability of design paramenters and proper incorporation of component is responsibility of building designer - not truss designer. Bracing shown is for lateral support of individual web members only. Additional temporary bracing to insure stability during construction is the responsibility of the erector. Additional permanent bracing of the overall structure is the responsibility of the building designer. For general guidance regarding fabrication, quality control, storage, delivery, erection and bracing, consult **ANSI/TPI1 Quality Criteria, DSB-89 and BCSI1 Building Component Safety Information** available from Truss Plate Institute, 583 D'Onofrio Drive, Madison, WI 53719.

14515 N. Outer Forty,
Suite #300
Chesterfield, MO 63017

Symbols

PLATE LOCATION AND ORIENTATION

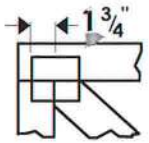

*Center plate on joint unless x, y offsets are indicated. Dimensions are in ft-in-sixteenths. Apply plates to both sides of truss and securely seat.

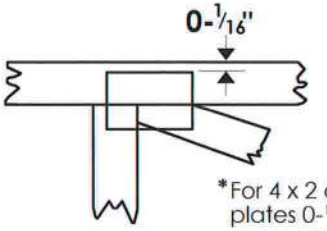

*For 4 x 2 orientation, locate plates 0-1/16" from outside edge of truss.

*This symbol indicates the required direction of slots in connector plates.

***Plate location details available in MiTek 20/20 software or upon request.**

PLATE SIZE

4 x 4

The first dimension is the width perpendicular to slots. Second dimension is the length parallel to slots.

LATERAL BRACING

Indicated by symbol shown and/or by text in the bracing section of the output. Use T, I or Eliminator bracing if indicated.

BEARING

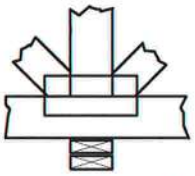

Indicates location where bearings (supports) occur. Icons vary but reaction section indicates joint number where bearings occur.

Industry Standards:

ANSI/TPI1: National Design Specification for Metal Plate Connected Wood Truss Construction.
DSB-89: Design Standard for Bracing.
BCSI1: Building Component Safety Information, Guide to Good Practice for Handling, Installing & Bracing of Metal Plate Connected Wood Trusses

Numbering System

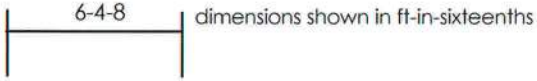

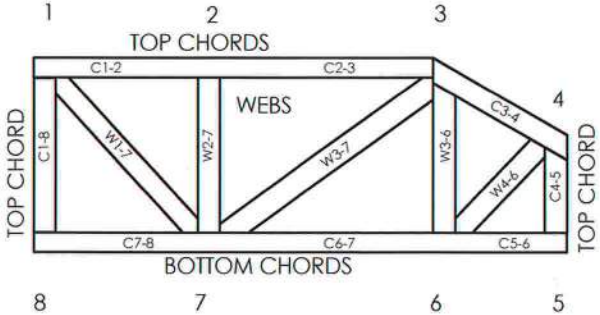

JOINTS ARE GENERALLY NUMBERED/LETTERED CLOCKWISE AROUND THE TRUSS STARTING AT THE JOINT FARTHEST TO THE LEFT.

CHORDS AND WEBS ARE IDENTIFIED BY END JOINT NUMBERS/LETTERS.

CONNECTOR PLATE CODE APPROVALS

BOCA	96-31, 95-43, 96-20-1, 96-67, 84-32
ICBO	4922, 5243, 5363, 3907
SBCCI	9667, 9730, 9604B, 9511, 9432A

MiTek®

TEE-LOK®

MiTek Engineering Reference Sheet: MII-7473

General Safety Notes

Failure to Follow Could Cause Property Damage or Personal Injury

1. Additional stability bracing for truss system, e.g. diagonal or X-bracing, is always required. See BCSI1.
2. Never exceed the design loading shown and never stack materials on inadequately braced trusses.
3. Provide copies of this truss design to the building designer, erection supervisor, property owner and all other interested parties.
4. Cut members to bear tightly against each other.
5. Place plates on each face of truss at each joint and embed fully. Knots and wane at joint locations are regulated by ANSI/TPI1.
6. Design assumes trusses will be suitably protected from the environment in accord with ANSI/TPI1.
7. Unless otherwise noted, moisture content of lumber shall not exceed 19% at time of fabrication.
8. Unless expressly noted, this design is not applicable for use with fire retardant or preservative treated lumber.
9. Camber is a non-structural consideration and is the responsibility of truss fabricator. General practice is to camber for dead load deflection.
10. Plate type, size, orientation and location dimensions shown indicate minimum plating requirements.
11. Lumber used shall be of the species and size, and in all respects, equal to or better than that specified.
12. Top chords must be sheathed or purlins provided at spacing shown on design.
13. Bottom chords require lateral bracing at 10 ft. spacing, or less, if no ceiling is installed, unless otherwise noted.
14. Connections not shown are the responsibility of others.
15. Do not cut or alter truss member or plate without prior approval of a professional engineer.
16. Install and load vertically unless indicated otherwise.

© 2004 MiTek®

Job	Truss	Truss Type	Qty	Ply	0 0
8833	H8	ROOF TRUSS	1	2	Job Reference (optional) I10050177

Reese Building Components, Inc., Sylvester Ga. 6.200 s Oct 18 2005 MiTek Industries, Inc. Wed Mar 22 15:38:32 2006 Page 1

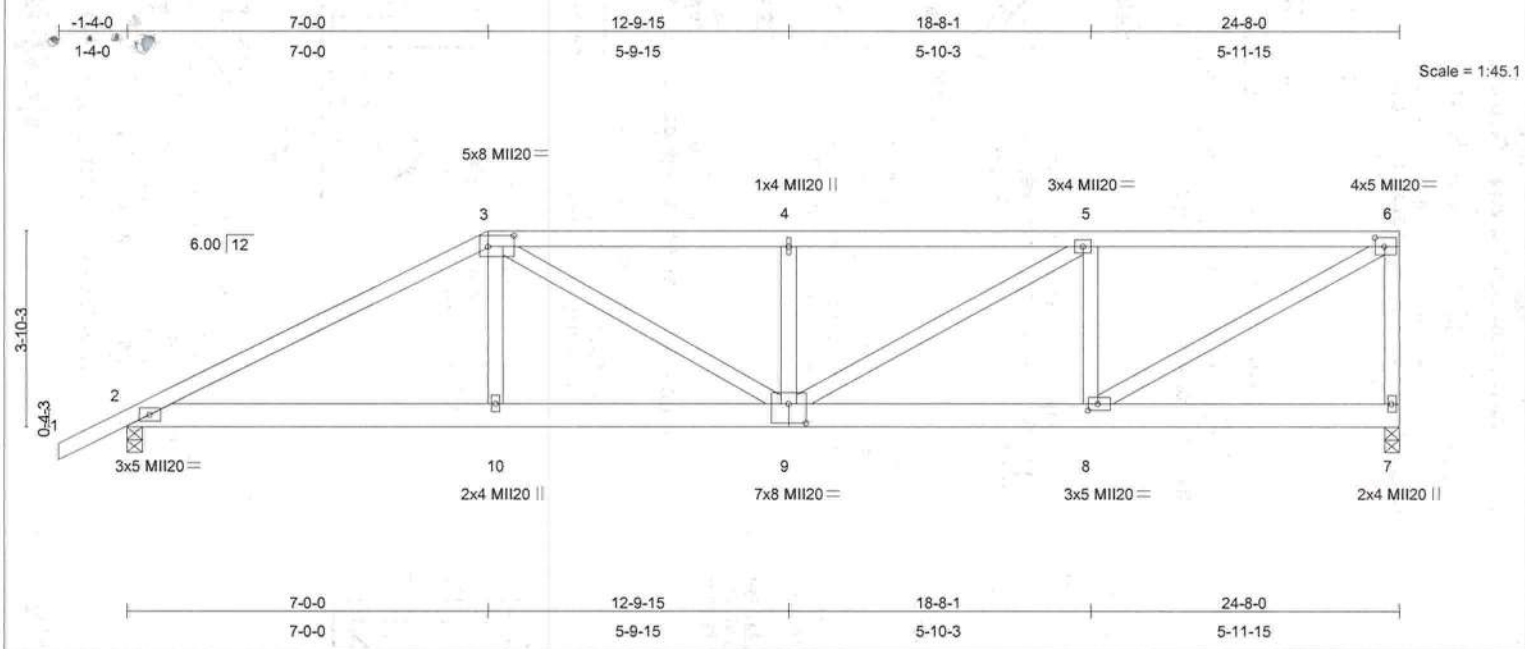

Plate Offsets (X,Y): [3:0-6-0,0-2-8], [6:0-2-4,0-2-0], [8:0-2-4,0-1-8], [9:0-4-0,0-4-8]

LOADING (psf)		SPACING 2-0-0		CSI		DEFL	in	(loc)	l/defl	L/d	PLATES	GRIP
TCLL	20.0	Plates Increase	1.25	TC	0.59	Vert(LL)	0.12	9	>999	360	MII20	249/190
TCDL	10.0	Lumber Increase	1.25	BC	0.30	Vert(TL)	-0.19	9	>999	240		
BCLL	0.0	Rep Stress Incr	NO	WB	0.52	Horz(TL)	0.03	7	n/a	n/a		
BCDL	10.0	Code FBC2004/TPI2002		(Matrix)							Weight: 289 lb	

LUMBER
TOP CHORD 2 X 4 SYP No.2
BOT CHORD 2 X 6 SYP No.2
WEBS 2 X 4 SYP No.3

BRACING
TOP CHORD Structural wood sheathing directly applied or 6-0-0 oc purlins, except end verticals.
BOT CHORD Rigid ceiling directly applied or 10-0-0 oc bracing.

REACTIONS (lb/size) 7=2176/0-3-8, 2=2023/0-3-8
Max Horz 2=217(load case 3)
Max Uplift7=-1180(load case 3), 2=-1027(load case 4)

FORCES (lb) - Maximum Compression/Maximum Tension
TOP CHORD 1-2=0/38, 2-3=-3854/1918, 3-4=-4003/2138, 4-5=-4003/2138, 5-6=-2924/1573, 6-7=-2023/1199
BOT CHORD 2-10=-1846/3365, 9-10=-1856/3396, 8-9=-1619/2924, 7-8=-135/133
WEBS 3-10=-235/737, 3-9=-519/706, 4-9=-761/709, 5-9=-695/1254, 5-8=-1425/1061, 6-8=-1727/3247

NOTES
1) 2-ply truss to be connected together with 10d Common(.148"x3") Nails as follows:
Top chords connected as follows: 2 X 4 - 1 row at 0-9-0 oc.
Bottom chords connected as follows: 2 X 6 - 2 rows at 0-9-0 oc.
Webs connected as follows: 2 X 4 - 1 row at 0-9-0 oc.
2) All loads are considered equally applied to all plies, except if noted as front (F) or back (B) face in the LOAD CASE(S) section. Ply to ply connections have been provided to distribute only loads noted as (F) or (B), unless otherwise indicated.
3) Wind: ASCE 7-02; 110mph (3-second gust); h=15ft; TCDL=5.0psf; BCDL=5.0psf; Category II; Exp C; enclosed; MWFRS gable end zone; cantilever left and right exposed ; end vertical left and right exposed; Lumber DOL=1.33 plate grip DOL=1.33.
4) Provide adequate drainage to prevent water ponding.
5) This truss requires plate inspection per the Tooth Count Method when this truss is chosen for quality assurance inspection.
6) Provide mechanical connection (by others) of truss to bearing plate capable of withstanding 1180 lb uplift at joint 7 and 1027 lb uplift at joint 2.
7) Girder carries hip end with 0-0-0 right side setback, 7-0-0 left side setback, and 7-0-0 end setback.
8) Hanger(s) or other connection device(s) shall be provided sufficient to support concentrated load(s) 513 lb down and 320 lb up at 7-0-0 on bottom chord. The design/selection of such connection device(s) is the responsibility of others.

LOAD CASE(S) Standard
1) Regular: Lumber Increase=1.25, Plate Increase=1.25
Uniform Loads (plf)
Vert: 1-3=-60, 3-6=-131(F=-71), 2-10=-20, 7-10=-44(F=-24)

Scott W. Miller, FL Lic #58316
MiTek Industries, Inc.
14515 North Outer Forty Drive
Suite 300
Chesterfield, MO, 63017
FL Cert.#6634

Continued on page 2

March 23,2006

WARNING - Verify design parameters and READ NOTES ON THIS AND INCLUDED MITEK REFERENCE PAGE MII-7473 BEFORE USE.
Design valid for use only with MiTek connectors. This design is based only upon parameters shown, and is for an individual building component. Applicability of design paramenters and proper incorporation of component is responsibility of building designer - not truss designer. Bracing shown is for lateral support of individual web members only. Additional temporary bracing to insure stability during construction is the responsibility of the erector. Additional permanent bracing of the overall structure is the responsibility of the building designer. For general guidance regarding fabrication, quality control, storage, delivery, erection and bracing, consult **ANSI/TPI1 Quality Criteria, DSB-89 and BCSI1 Building Component Safety Information** available from Truss Plate Institute, 583 D'Onofrio Drive, Madison, WI 53719.

14515 N. Outer Forty,
Suite #300
Chesterfield, MO 63017

MiTek®

Symbols

PLATE LOCATION AND ORIENTATION

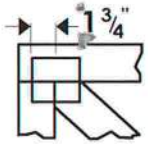

*Center plate on joint unless x, y offsets are indicated. Dimensions are in ft-in-sixteenths. Apply plates to both sides of truss and securely seat.

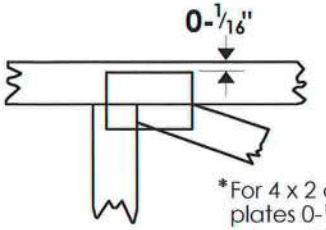

*For 4 x 2 orientation, locate plates 0-1/16" from outside edge of truss.

*This symbol indicates the required direction of slots in connector plates.

***Plate location details available in MiTek 20/20 software or upon request.**

PLATE SIZE

4 x 4 — The first dimension is the width perpendicular to slots. Second dimension is the length parallel to slots.

LATERAL BRACING

Indicated by symbol shown and/or by text in the bracing section of the output. Use T, I or Eliminator bracing if indicated.

BEARING

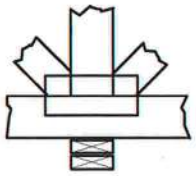

Indicates location where bearings (supports) occur. Icons vary but reaction section indicates joint number where bearings occur.

Industry Standards:

ANSI/TPI1: National Design Specification for Metal Plate Connected Wood Truss Construction.
DSB-89: Design Standard for Bracing.
BCSI1: Building Component Safety Information, Guide to Good Practice for Handling, Installing & Bracing of Metal Plate Connected Wood Trusses

Numbering System

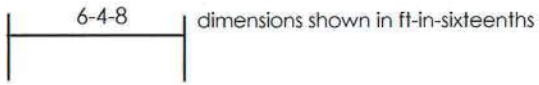

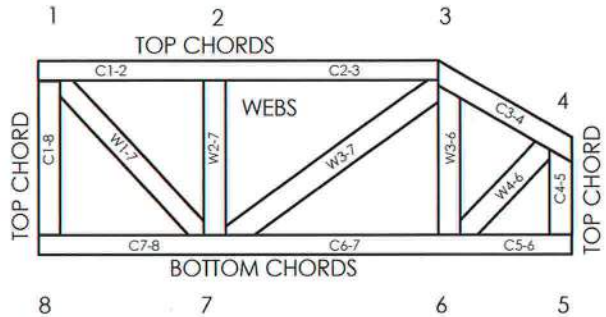

JOINTS ARE GENERALLY NUMBERED/LETTERED CLOCKWISE AROUND THE TRUSS STARTING AT THE JOINT FARTHEST TO THE LEFT.

CHORDS AND WEBS ARE IDENTIFIED BY END JOINT NUMBERS/LETTERS.

CONNECTOR PLATE CODE APPROVALS

BOCA	96-31, 95-43, 96-20-1, 96-67, 84-32
ICBO	4922, 5243, 5363, 3907
SBCCI	9667, 9730, 9604B, 9511, 9432A

MiTek®

TEE-LOK®

MiTek Engineering Reference Sheet: MII-7473

General Safety Notes

Failure to Follow Could Cause Property Damage or Personal Injury

1. Additional stability bracing for truss system, e.g. diagonal or X-bracing, is always required. See BCSI1.
2. Never exceed the design loading shown and never stack materials on inadequately braced trusses.
3. Provide copies of this truss design to the building designer, erection supervisor, property owner and all other interested parties.
4. Cut members to bear tightly against each other.
5. Place plates on each face of truss at each joint and embed fully. Knots and wane at joint locations are regulated by ANSI/TPI1.
6. Design assumes trusses will be suitably protected from the environment in accord with ANSI/TPI1.
7. Unless otherwise noted, moisture content of lumber shall not exceed 19% at time of fabrication.
8. Unless expressly noted, this design is not applicable for use with fire retardant or preservative treated lumber.
9. Camber is a non-structural consideration and is the responsibility of truss fabricator. General practice is to camber for dead load deflection.
10. Plate type, size, orientation and location dimensions shown indicate minimum plating requirements.
11. Lumber used shall be of the species and size, and in all respects, equal to or better than that specified.
12. Top chords must be sheathed or purlins provided at spacing shown on design.
13. Bottom chords require lateral bracing at 10 ft. spacing, or less, if no ceiling is installed, unless otherwise noted.
14. Connections not shown are the responsibility of others.
15. Do not cut or alter truss member or plate without prior approval of a professional engineer.
16. Install and load vertically unless indicated otherwise.

© 2004 MiTek®

LOAD CASE(S) Standard
Concentrated Loads (lb)
Vert: 10=-513(F)

WARNING - Verify design parameters and READ NOTES ON THIS AND INCLUDED MITEK REFERENCE PAGE MII-7473 BEFORE USE.
Design valid for use only with MiTek connectors. This design is based only upon parameters shown, and is for an individual building component. Applicability of design paramenters and proper incorporation of component is responsibility of building designer - not truss designer. Bracing shown is for lateral support of individual web members only. Additional temporary bracing to insure stability during construction is the responsibility of the erector. Additional permanent bracing of the overall structure is the responsibility of the building designer. For general guidance regarding fabrication, quality control, storage, delivery, erection and bracing, consult **ANSI/TPI1 Quality Criteria, DSB-89 and BCSI1 Building Component Safety Information** available from Truss Plate Institute, 583 D'Onofrio Drive, Madison, WI 53719.

14515 N. Outer Forty,
Suite #300
Chesterfield, MO 63017

MiTek®

Symbols

PLATE LOCATION AND ORIENTATION

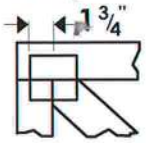

*Center plate on joint unless x, y offsets are indicated. Dimensions are in ft-in-sixteenths. Apply plates to both sides of truss and securely seat.

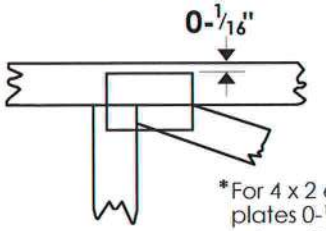

*For 4 x 2 orientation, locate plates 0-1/16" from outside edge of truss.

*This symbol indicates the required direction of slots in connector plates.

***Plate location details available in MiTek 20/20 software or upon request.**

PLATE SIZE

4 x 4 — The first dimension is the width perpendicular to slots. Second dimension is the length parallel to slots.

LATERAL BRACING

Indicated by symbol shown and/or by text in the bracing section of the output. Use T, I or Eliminator bracing if indicated.

BEARING

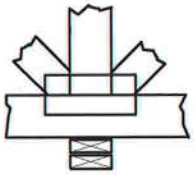

Indicates location where bearings (supports) occur. Icons vary but reaction section indicates joint number where bearings occur.

Industry Standards:

ANSI/TPI1: National Design Specification for Metal Plate Connected Wood Truss Construction.
DSB-89: Design Standard for Bracing.
BCSI1: Building Component Safety Information, Guide to Good Practice for Handling, Installing & Bracing of Metal Plate Connected Wood Trusses

Numbering System

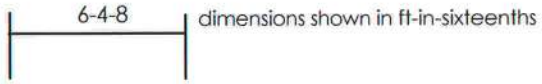

dimensions shown in ft-in-sixteenths

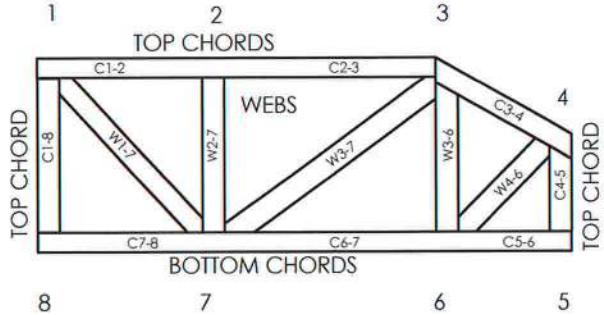

JOINTS ARE GENERALLY NUMBERED/LETTERED CLOCKWISE AROUND THE TRUSS STARTING AT THE JOINT FARTHEST TO THE LEFT.

CHORDS AND WEBS ARE IDENTIFIED BY END JOINT NUMBERS/LETTERS.

CONNECTOR PLATE CODE APPROVALS

BOCA	96-31, 95-43, 96-20-1, 96-67, 84-32
ICBO	4922, 5243, 5363, 3907
SBCCI	9667, 9730, 9604B, 9511, 9432A

MiTek®

TEE-LOK®

MiTek Engineering Reference Sheet: MII-7473

General Safety Notes

Failure to Follow Could Cause Property Damage or Personal Injury

1. Additional stability bracing for truss system, e.g. diagonal or X-bracing, is always required. See BCSI1.
2. Never exceed the design loading shown and never stack materials on inadequately braced trusses.
3. Provide copies of this truss design to the building designer, erection supervisor, property owner and all other interested parties.
4. Cut members to bear tightly against each other.
5. Place plates on each face of truss at each joint and embed fully. Knots and wane at joint locations are regulated by ANSI/TPI1.
6. Design assumes trusses will be suitably protected from the environment in accord with ANSI/TPI1.
7. Unless otherwise noted, moisture content of lumber shall not exceed 19% at time of fabrication.
8. Unless expressly noted, this design is not applicable for use with fire retardant or preservative treated lumber.
9. Camber is a non-structural consideration and is the responsibility of truss fabricator. General practice is to camber for dead load deflection.
10. Plate type, size, orientation and location dimensions shown indicate minimum plating requirements.
11. Lumber used shall be of the species and size, and in all respects, equal to or better than that specified.
12. Top chords must be sheathed or purlins provided at spacing shown on design.
13. Bottom chords require lateral bracing at 10 ft. spacing, or less, if no ceiling is installed, unless otherwise noted.
14. Connections not shown are the responsibility of others.
15. Do not cut or alter truss member or plate without prior approval of a professional engineer.
16. Install and load vertically unless indicated otherwise.

© 2004 MiTek®

Job	Truss	Truss Type	Qty	Ply	0 0
8833	H9	ROOF TRUSS	1	1	I10050178 Job Reference (optional)

Reese Building Components, Inc., Sylvester Ga. 6.200 s Oct 18 2005 MiTek Industries, Inc. Wed Mar 22 15:38:32 2006 Page 1

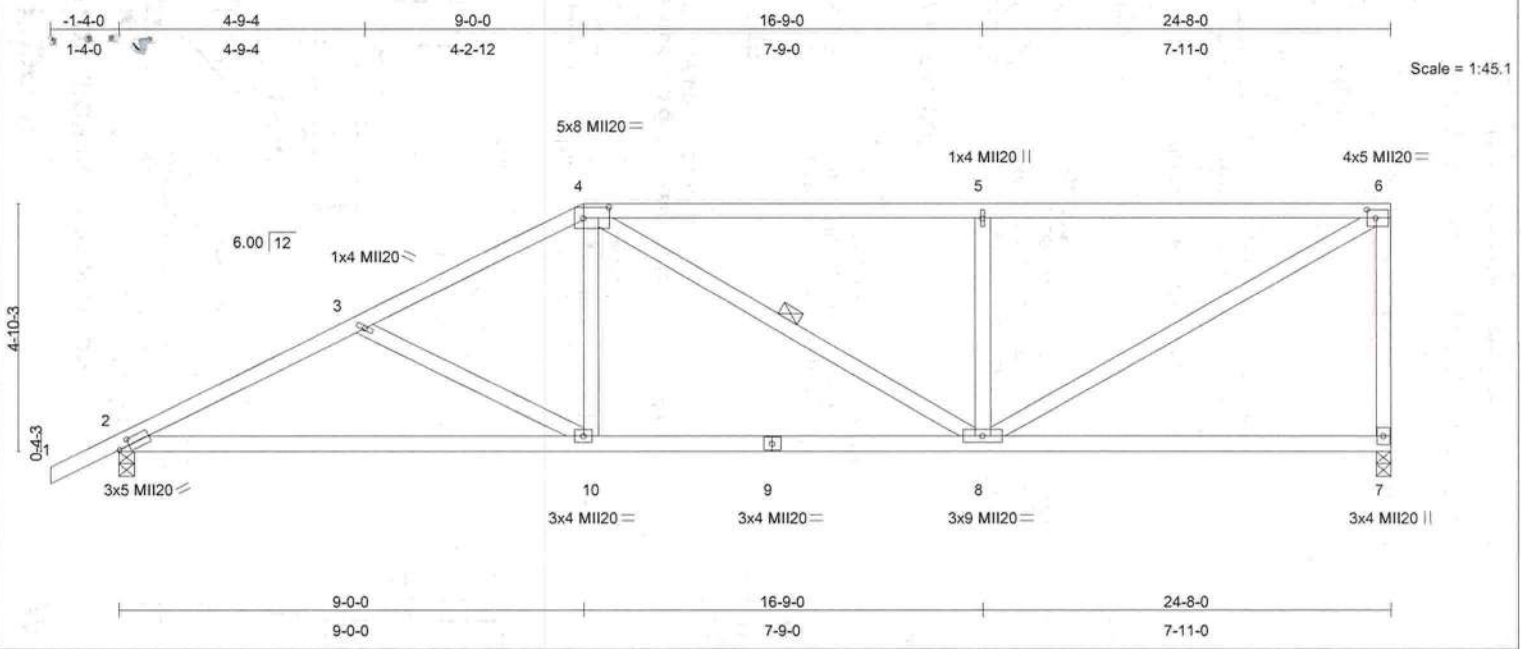

Plate Offsets (X,Y): [2:0-2-10,0-1-8], [4:0-6-0,0-2-8], [6:0-2-0,0-2-0]

LOADING (psf)		SPACING	2-0-0	CSI		DEFL	in	(loc)	l/defl	L/d	PLATES	GRIP
TCLL	20.0	Plates Increase	1.25	TC	0.98	Vert(LL)	0.08	8-10	>999	360	MII20	249/190
TCDL	10.0	Lumber Increase	1.25	BC	0.42	Vert(TL)	-0.28	2-10	>999	240		
BCLL	0.0	Rep Stress Incr	YES	WB	0.82	Horz(TL)	0.04	7	n/a	n/a		
BCDL	10.0	Code FBC2004/TPI2002		(Matrix)							Weight: 129 lb	

LUMBER
TOP CHORD 2 X 4 SYP No.2
BOT CHORD 2 X 4 SYP No.2
WEBS 2 X 4 SYP No.3

BRACING
TOP CHORD Structural wood sheathing directly applied or 4-7-7 oc purlins, except end verticals.
BOT CHORD Rigid ceiling directly applied or 7-8-11 oc bracing.
WEBS 1 Row at midpt 4-8

REACTIONS (lb/size) 7=972/0-3-8, 2=1066/0-3-8
Max Horz 2=276(load case 3)
Max Uplift7=-426(load case 3), 2=-446(load case 4)

FORCES (lb) - Maximum Compression/Maximum Tension
TOP CHORD 1-2=0/35, 2-3=-1713/599, 3-4=-1463/481, 4-5=-1219/501, 5-6=-1219/501, 6-7=-890/452
BOT CHORD 2-10=-660/1479, 9-10=-575/1277, 8-9=-575/1277, 7-8=-81/69
WEBS 3-10=-238/249, 4-10=-29/290, 4-8=-133/79, 5-8=-499/392, 6-8=-584/1333

NOTES
1) Wind: ASCE 7-02; 110mph (3-second gust); h=15ft; TCDL=5.0psf; BCDL=5.0psf; Category II; Exp C; enclosed; MWFRS gable end zone; cantilever left and right exposed ; end vertical left and right exposed; Lumber DOL=1.33 plate grip DOL=1.33.
2) Provide adequate drainage to prevent water ponding.
3) This truss requires plate inspection per the Tooth Count Method when this truss is chosen for quality assurance inspection.
4) Provide mechanical connection (by others) of truss to bearing plate capable of withstanding 426 lb uplift at joint 7 and 446 lb uplift at joint 2.

LOAD CASE(S) Standard

Scott W. Miller, FL Lic #58316
MiTek Industries, Inc.
14515 North Outer Forty Drive
Suite 300
Chesterfield, MO, 63017
FL Cert.#6634

March 23,2006

WARNING - Verify design parameters and READ NOTES ON THIS AND INCLUDED MITEK REFERENCE PAGE MII-7473 BEFORE USE.
Design valid for use only with MiTek connectors. This design is based only upon parameters shown, and is for an individual building component. Applicability of design paramenters and proper incorporation of component is responsibility of building designer - not truss designer. Bracing shown is for lateral support of individual web members only. Additional temporary bracing to insure stability during construction is the responsibility of the erector. Additional permanent bracing of the overall structure is the responsibility of the building designer. For general guidance regarding fabrication, quality control, storage, delivery, erection and bracing, consult **ANSI/TPI1 Quality Criteria, DSB-89 and BCSI1 Building Component Safety Information** available from Truss Plate Institute, 583 D'Onofrio Drive, Madison, WI 53719.

14515 N. Outer Forty,
Suite #300
Chesterfield, MO 63017

Symbols

PLATE LOCATION AND ORIENTATION

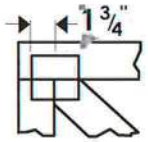

*Center plate on joint unless x, y offsets are indicated. Dimensions are in ft-in-sixteenths. Apply plates to both sides of truss and securely seat.

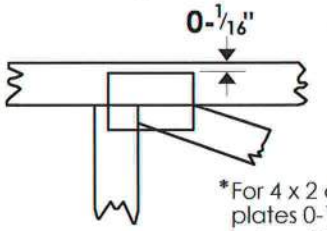

*For 4 x 2 orientation, locate plates 0-1/16" from outside edge of truss.

*This symbol indicates the required direction of slots in connector plates.

***Plate location details available in MiTek 20/20 software or upon request.**

PLATE SIZE

4 x 4

The first dimension is the width perpendicular to slots. Second dimension is the length parallel to slots.

LATERAL BRACING

Indicated by symbol shown and/or by text in the bracing section of the output. Use T, I or Eliminator bracing if indicated.

BEARING

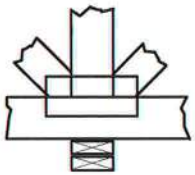

Indicates location where bearings (supports) occur. Icons vary but reaction section indicates joint number where bearings occur.

Industry Standards:

ANSI/TPI1: National Design Specification for Metal Plate Connected Wood Truss Construction.
DSB-89: Design Standard for Bracing.
BCSI1: Building Component Safety Information, Guide to Good Practice for Handling, Installing & Bracing of Metal Plate Connected Wood Trusses

Numbering System

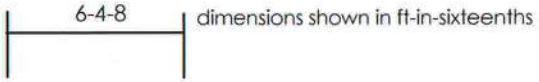

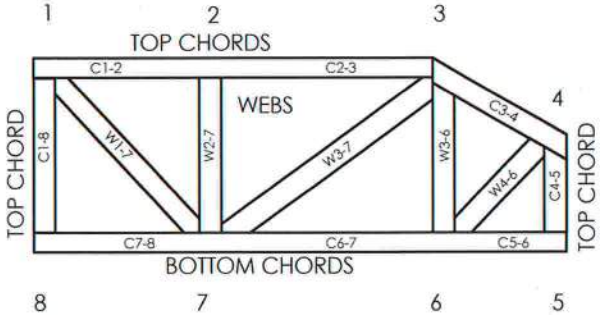

JOINTS ARE GENERALLY NUMBERED/LETTERED CLOCKWISE AROUND THE TRUSS STARTING AT THE JOINT FARTHEST TO THE LEFT.

CHORDS AND WEBS ARE IDENTIFIED BY END JOINT NUMBERS/LETTERS.

CONNECTOR PLATE CODE APPROVALS

BOCA	96-31, 95-43, 96-20-1, 96-67, 84-32
ICBO	4922, 5243, 5363, 3907
SBCCI	9667, 9730, 9604B, 9511, 9432A

MiTek®

TEE-LOK®

MiTek Engineering Reference Sheet: MII-7473

General Safety Notes

Failure to Follow Could Cause Property Damage or Personal Injury

1. Additional stability bracing for truss system, e.g. diagonal or X-bracing, is always required. See BCSI1.
2. Never exceed the design loading shown and never stack materials on inadequately braced trusses.
3. Provide copies of this truss design to the building designer, erection supervisor, property owner and all other interested parties.
4. Cut members to bear tightly against each other.
5. Place plates on each face of truss at each joint and embed fully. Knots and wane at joint locations are regulated by ANSI/TPI1.
6. Design assumes trusses will be suitably protected from the environment in accord with ANSI/TPI1.
7. Unless otherwise noted, moisture content of lumber shall not exceed 19% at time of fabrication.
8. Unless expressly noted, this design is not applicable for use with fire retardant or preservative treated lumber.
9. Camber is a non-structural consideration and is the responsibility of truss fabricator. General practice is to camber for dead load deflection.
10. Plate type, size, orientation and location dimensions shown indicate minimum plating requirements.
11. Lumber used shall be of the species and size, and in all respects, equal to or better than that specified.
12. Top chords must be sheathed or purlins provided at spacing shown on design.
13. Bottom chords require lateral bracing at 10 ft. spacing, or less, if no ceiling is installed, unless otherwise noted.
14. Connections not shown are the responsibility of others.
15. Do not cut or alter truss member or plate without prior approval of a professional engineer.
16. Install and load vertically unless indicated otherwise.

© 2004 MiTek®

Job	Truss	Truss Type	Qty	Ply	0 0
8833	J1	ROOF TRUSS	12	1	Job Reference (optional)

I10050179

Reese Building Components, Inc., Sylvester Ga.

6.200 s Oct 18 2005 MiTek Industries, Inc. Wed Mar 22 15:38:32 2006 Page 1

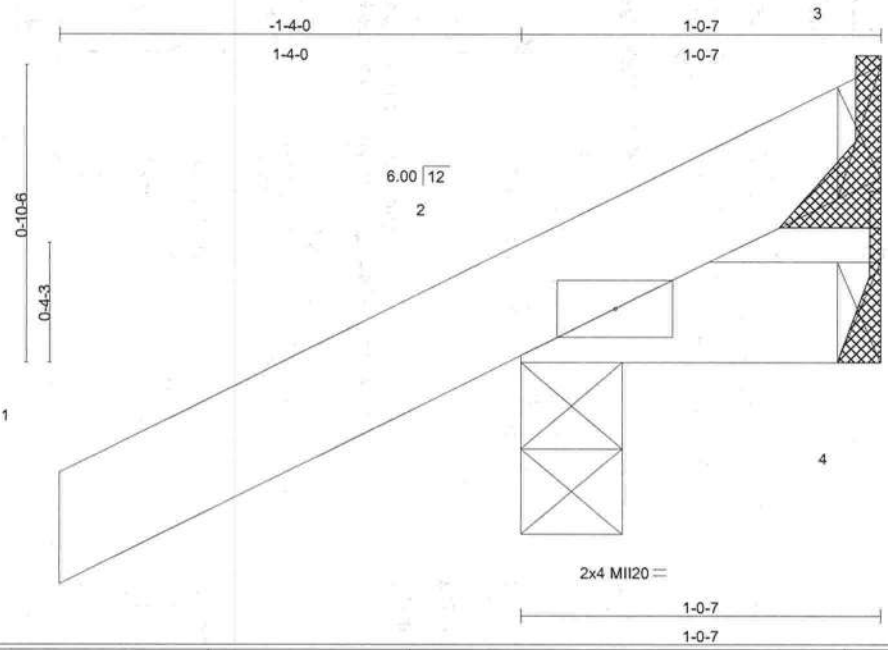

LOADING (psf)		SPACING	2-0-0	CSI		DEFL	in	(loc)	l/defl	L/d	PLATES	GRIP
TCLL	20.0	Plates Increase	1.25	TC	0.14	Vert(LL)	0.00	2	****	360	MII20	249/190
TCDL	10.0	Lumber Increase	1.25	BC	0.00	Vert(TL)	-0.00	2	>999	240		
BCLL	0.0	Rep Stress Incr	YES	WB	0.00	Horz(TL)	-0.00	3	n/a	n/a		
BCDL	10.0	Code FBC2004/TPI2002		(Matrix)							Weight: 6 lb	

LUMBER
TOP CHORD 2 X 4 SYP No.2
BOT CHORD 2 X 4 SYP No.2

BRACING
TOP CHORD Structural wood sheathing directly applied or 1-0-7 oc purlins.
BOT CHORD Rigid ceiling directly applied or 10-0-0 oc bracing.

REACTIONS (lb/size) 2=178/0-3-8, 4=10/Mechanical, 3=-28/Mechanical
Max Horz 2=79(load case 4)
Max Uplift2=-183(load case 4), 3=-28(load case 1)
Max Grav 2=178(load case 1), 4=10(load case 1), 3=50(load case 4)

FORCES (lb) - Maximum Compression/Maximum Tension
TOP CHORD 1-2=0/34, 2-3=-42/24
BOT CHORD 2-4=0/0

NOTES
1) Wind: ASCE 7-02; 110mph (3-second gust); h=15ft; TCDL=5.0psf; BCDL=5.0psf; Category II; Exp C; enclosed; MWFRS gable end zone; cantilever left and right exposed ; end vertical left and right exposed; Lumber DOL=1.33 plate grip DOL=1.33.
2) This truss requires plate inspection per the Tooth Count Method when this truss is chosen for quality assurance inspection.
3) Refer to girder(s) for truss to truss connections.
4) Provide mechanical connection (by others) of truss to bearing plate capable of withstanding 183 lb uplift at joint 2 and 28 lb uplift at joint 3.

LOAD CASE(S) Standard

Scott W. Miller, FL Lic #58316
MiTek Industries, Inc.
14515 North Outer Forty Drive
Suite 300
Chesterfield, MO, 63017
FL Cert.#6634

March 23,2006

WARNING - Verify design parameters and READ NOTES ON THIS AND INCLUDED MITEK REFERENCE PAGE MII-7473 BEFORE USE.
Design valid for use only with MiTek connectors. This design is based only upon parameters shown, and is for an individual building component. Applicability of design paramenters and proper incorporation of component is responsibility of building designer - not truss designer. Bracing shown is for lateral support of individual web members only. Additional temporary bracing to insure stability during construction is the responsibility of the erector. Additional permanent bracing of the overall structure is the responsibility of the building designer. For general guidance regarding fabrication, quality control, storage, delivery, erection and bracing, consult **ANSI/TPI1 Quality Criteria, DSB-89 and BCSI1 Building Component Safety Information** available from Truss Plate Institute, 583 D'Onofrio Drive, Madison, WI 53719.

14515 N. Outer Forty,
Suite #300
Chesterfield, MO 63017

MiTek

Symbols

PLATE LOCATION AND ORIENTATION

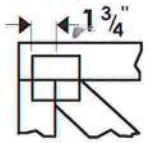

*Center plate on joint unless x, y offsets are indicated. Dimensions are in ft-in-sixteenths. Apply plates to both sides of truss and securely seat.

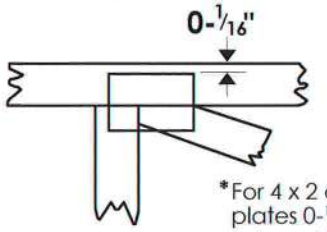

*For 4 x 2 orientation, locate plates 0-1/16" from outside edge of truss.

*This symbol indicates the required direction of slots in connector plates.

***Plate location details available in MiTek 20/20 software or upon request.**

PLATE SIZE

4 x 4 — The first dimension is the width perpendicular to slots. Second dimension is the length parallel to slots.

LATERAL BRACING

Indicated by symbol shown and/or by text in the bracing section of the output. Use T, I or Eliminator bracing if indicated.

BEARING

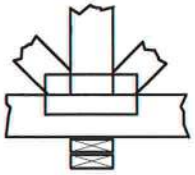

Indicates location where bearings (supports) occur. Icons vary but reaction section indicates joint number where bearings occur.

Industry Standards:

ANSI/TPI1: National Design Specification for Metal Plate Connected Wood Truss Construction.
DSB-89: Design Standard for Bracing.
BCSI1: Building Component Safety Information, Guide to Good Practice for Handling, Installing & Bracing of Metal Plate Connected Wood Trusses

Numbering System

dimensions shown in ft-in-sixteenths

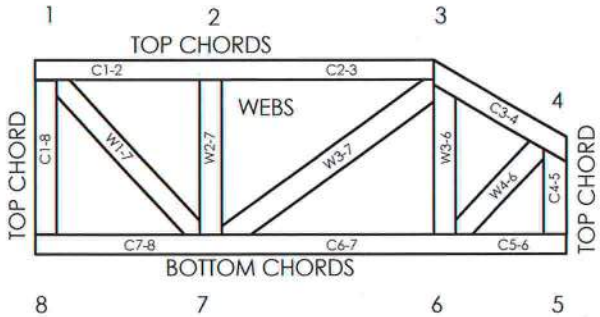

JOINTS ARE GENERALLY NUMBERED/LETTERED CLOCKWISE AROUND THE TRUSS STARTING AT THE JOINT FARTHEST TO THE LEFT.

CHORDS AND WEBS ARE IDENTIFIED BY END JOINT NUMBERS/LETTERS.

CONNECTOR PLATE CODE APPROVALS

BOCA	96-31, 95-43, 96-20-1, 96-67, 84-32
ICBO	4922, 5243, 5363, 3907
SBCCI	9667, 9730, 9604B, 9511, 9432A

MiTek®

TEE-LOK®

MiTek Engineering Reference Sheet: MII-7473

General Safety Notes

Failure to Follow Could Cause Property Damage or Personal Injury

1. Additional stability bracing for truss system, e.g. diagonal or X-bracing, is always required. See BCSI1.
2. Never exceed the design loading shown and never stack materials on inadequately braced trusses.
3. Provide copies of this truss design to the building designer, erection supervisor, property owner and all other interested parties.
4. Cut members to bear tightly against each other.
5. Place plates on each face of truss at each joint and embed fully. Knots and wane at joint locations are regulated by ANSI/TPI1.
6. Design assumes trusses will be suitably protected from the environment in accord with ANSI/TPI1.
7. Unless otherwise noted, moisture content of lumber shall not exceed 19% at time of fabrication.
8. Unless expressly noted, this design is not applicable for use with fire retardant or preservative treated lumber.
9. Camber is a non-structural consideration and is the responsibility of truss fabricator. General practice is to camber for dead load deflection.
10. Plate type, size, orientation and location dimensions shown indicate minimum plating requirements.
11. Lumber used shall be of the species and size, and in all respects, equal to or better than that specified.
12. Top chords must be sheathed or purlins provided at spacing shown on design.
13. Bottom chords require lateral bracing at 10 ft. spacing, or less, if no ceiling is installed, unless otherwise noted.
14. Connections not shown are the responsibility of others.
15. Do not cut or alter truss member or plate without prior approval of a professional engineer.
16. Install and load vertically unless indicated otherwise.

© 2004 MiTek®

Job	Truss	Truss Type	Qty	Ply	0 0
8833	J3	ROOF TRUSS	12	1	I10050180 Job Reference (optional)

Reese Building Components, Inc., Sylvester Ga.

6.200 s Oct 18 2005 MiTek Industries, Inc. Wed Mar 22 15:38:33 2006 Page 1

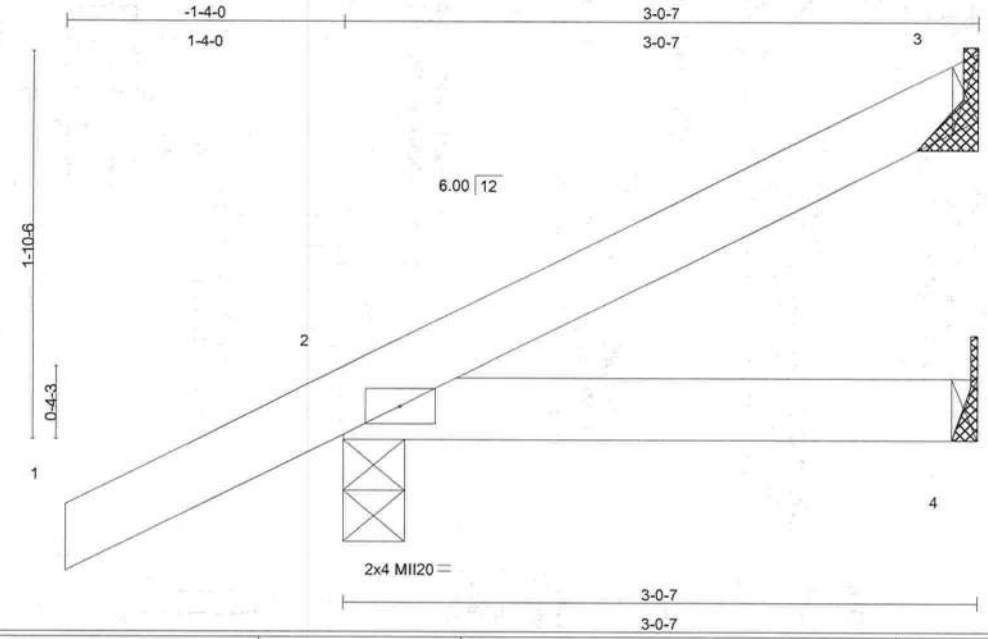

LOADING (psf)		SPACING	2-0-0	CSI		DEFL	in	(loc)	l/defl	L/d	PLATES	GRIP
TCLL	20.0	Plates Increase	1.25	TC	0.15	Vert(LL)	0.00	2	****	360	MII20	249/190
TCDL	10.0	Lumber Increase	1.25	BC	0.04	Vert(TL)	-0.01	2-4	>999	240		
BCLL	0.0	Rep Stress Incr	YES	WB	0.00	Horz(TL)	-0.00	3	n/a	n/a		
BCDL	10.0	Code FBC2004/TPI2002		(Matrix)							Weight: 12 lb	

LUMBER
TOP CHORD 2 X 4 SYP No.2
BOT CHORD 2 X 4 SYP No.2

BRACING
TOP CHORD Structural wood sheathing directly applied or 3-0-7 oc purlins.
BOT CHORD Rigid ceiling directly applied or 10-0-0 oc bracing.

REACTIONS (lb/size) 3=58/Mechanical, 2=223/0-3-8, 4=28/Mechanical
Max Horz 2=132(load case 4)
Max Uplift3=-53(load case 4), 2=-160(load case 4)

FORCES (lb) - Maximum Compression/Maximum Tension
TOP CHORD 1-2=0/35, 2-3=-51/20
BOT CHORD 2-4=0/0

NOTES
1) Wind: ASCE 7-02; 110mph (3-second gust); h=15ft; TCDL=5.0psf; BCDL=5.0psf; Category II; Exp C; enclosed; MWFRS gable end zone; cantilever left and right exposed ; end vertical left and right exposed; Lumber DOL=1.33 plate grip DOL=1.33.
2) This truss requires plate inspection per the Tooth Count Method when this truss is chosen for quality assurance inspection.
3) Refer to girder(s) for truss to truss connections.
4) Provide mechanical connection (by others) of truss to bearing plate capable of withstanding 53 lb uplift at joint 3 and 160 lb uplift at joint 2.

LOAD CASE(S) Standard

Scott W. Miller, FL Lic #58316
MiTek Industries, Inc.
14515 North Outer Forty Drive
Suite 300
Chesterfield, MO, 63017
FL Cert.#6634

March 23,2006

WARNING - Verify design parameters and READ NOTES ON THIS AND INCLUDED MITEK REFERENCE PAGE MII-7473 BEFORE USE.
Design valid for use only with MiTek connectors. This design is based only upon parameters shown, and is for an individual building component. Applicability of design paramenters and proper incorporation of component is responsibility of building designer - not truss designer. Bracing shown is for lateral support of individual web members only. Additional temporary bracing to insure stability during construction is the responsibility of the erector. Additional permanent bracing of the overall structure is the responsibility of the building designer. For general guidance regarding fabrication, quality control, storage, delivery, erection and bracing, consult **ANSI/TPI1 Quality Criteria, DSB-89 and BCSI1 Building Component Safety Information** available from Truss Plate Institute, 583 D'Onofrio Drive, Madison, WI 53719.

14515 N. Outer Forty,
Suite #300
Chesterfield, MO 63017

Symbols

PLATE LOCATION AND ORIENTATION

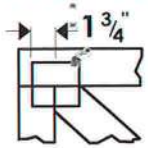

*Center plate on joint unless x, y offsets are indicated. Dimensions are in ft-in-sixteenths. Apply plates to both sides of truss and securely seat.

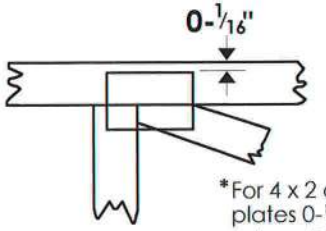

*For 4 x 2 orientation, locate plates 0-1/16" from outside edge of truss.

*This symbol indicates the required direction of slots in connector plates.

***Plate location details available in MiTek 20/20 software or upon request.**

PLATE SIZE

4 x 4

The first dimension is the width perpendicular to slots. Second dimension is the length parallel to slots.

LATERAL BRACING

Indicated by symbol shown and/or by text in the bracing section of the output. Use T, I or Eliminator bracing if indicated.

BEARING

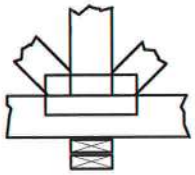

Indicates location where bearings (supports) occur. Icons vary but reaction section indicates joint number where bearings occur.

Industry Standards:

ANSI/TPI1: National Design Specification for Metal Plate Connected Wood Truss Construction.
DSB-89: Design Standard for Bracing.
BCSI1: Building Component Safety Information, Guide to Good Practice for Handling, Installing & Bracing of Metal Plate Connected Wood Trusses

Numbering System

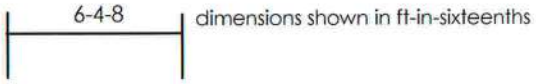

dimensions shown in ft-in-sixteenths

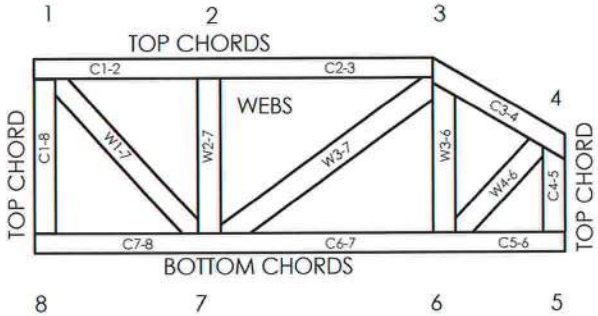

JOINTS ARE GENERALLY NUMBERED/LETTERED CLOCKWISE AROUND THE TRUSS STARTING AT THE JOINT FARTHEST TO THE LEFT.

CHORDS AND WEBS ARE IDENTIFIED BY END JOINT NUMBERS/LETTERS.

CONNECTOR PLATE CODE APPROVALS

BOCA	96-31, 95-43, 96-20-1, 96-67, 84-32
ICBO	4922, 5243, 5363, 3907
SBCCI	9667, 9730, 9604B, 9511, 9432A

MiTek®

TEE-LOK®

MiTek Engineering Reference Sheet: MII-7473

General Safety Notes

Failure to Follow Could Cause Property Damage or Personal Injury

1. Additional stability bracing for truss system, e.g. diagonal or X-bracing, is always required. See BCSI1.
2. Never exceed the design loading shown and never stack materials on inadequately braced trusses.
3. Provide copies of this truss design to the building designer, erection supervisor, property owner and all other interested parties.
4. Cut members to bear tightly against each other.
5. Place plates on each face of truss at each joint and embed fully. Knots and wane at joint locations are regulated by ANSI/TPI1.
6. Design assumes trusses will be suitably protected from the environment in accord with ANSI/TPI1.
7. Unless otherwise noted, moisture content of lumber shall not exceed 19% at time of fabrication.
8. Unless expressly noted, this design is not applicable for use with fire retardant or preservative treated lumber.
9. Camber is a non-structural consideration and is the responsibility of truss fabricator. General practice is to camber for dead load deflection.
10. Plate type, size, orientation and location dimensions shown indicate minimum plating requirements.
11. Lumber used shall be of the species and size, and in all respects, equal to or better than that specified.
12. Top chords must be sheathed or purlins provided at spacing shown on design.
13. Bottom chords require lateral bracing at 10 ft. spacing, or less, if no ceiling is installed, unless otherwise noted.
14. Connections not shown are the responsibility of others.
15. Do not cut or alter truss member or plate without prior approval of a professional engineer.
16. Install and load vertically unless indicated otherwise.

© 2004 MiTek®

Job	Truss	Truss Type	Qty	Ply	0 0
8833	J5	ROOF TRUSS	8	1	I10050181
					Job Reference (optional)

Reese Building Components, Inc., Sylvester Ga.

6.200 s Oct 18 2005 MiTek Industries, Inc. Wed Mar 22 15:38:33 2006 Page 1

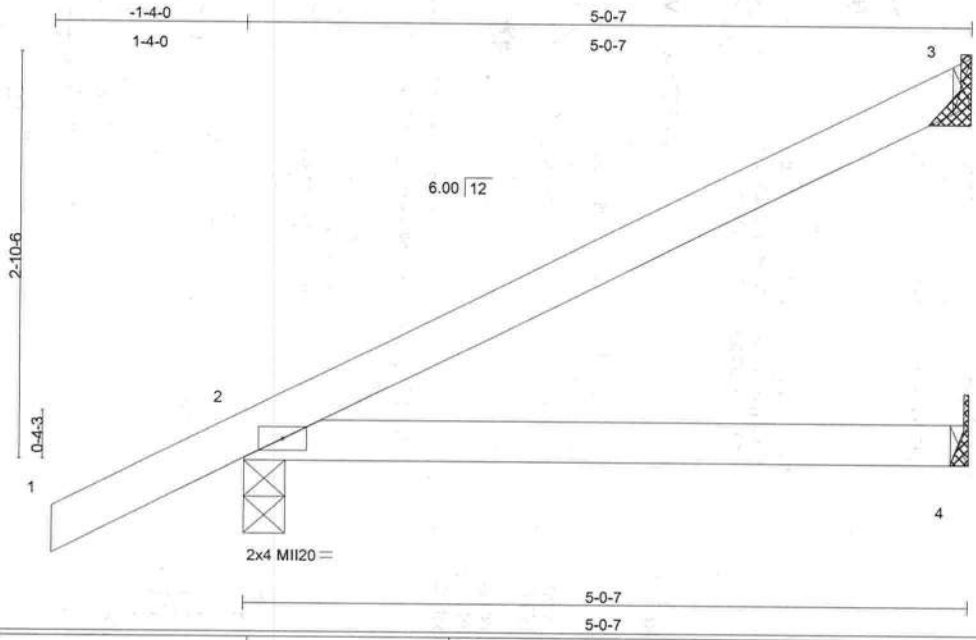

LOADING (psf)		SPACING	2-0-0	CSI		DEFL	in	(loc)	l/defl	L/d	PLATES	GRIP
TCLL	20.0	Plates Increase	1.25	TC	0.25	Vert(LL)	0.00	2	****	360	MII20	249/190
TCDL	10.0	Lumber Increase	1.25	BC	0.11	Vert(TL)	-0.04	2-4	>999	240		
BCLL	0.0	Rep Stress Incr	YES	WB	0.00	Horz(TL)	-0.00	3	n/a	n/a		
BCDL	10.0	Code FBC2004/TPI2002		(Matrix)							Weight: 18 lb	

LUMBER
TOP CHORD 2 X 4 SYP No.2
BOT CHORD 2 X 4 SYP No.2

BRACING
TOP CHORD Structural wood sheathing directly applied or 5-0-7 oc purlins.
BOT CHORD Rigid ceiling directly applied or 10-0-0 oc bracing.

REACTIONS (lb/size) 3=129/Mechanical, 2=293/0-3-8, 4=48/Mechanical
Max Horz 2=188(load case 4)
Max Uplift3=-126(load case 4), 2=-168(load case 4)

FORCES (lb) - Maximum Compression/Maximum Tension
TOP CHORD 1-2=0/35, 2-3=-81/46
BOT CHORD 2-4=0/0

NOTES
1) Wind: ASCE 7-02; 110mph (3-second gust); h=15ft; TCDL=5.0psf; BCDL=5.0psf; Category II; Exp C; enclosed; MWFRS gable end zone; cantilever left and right exposed ; end vertical left and right exposed; Lumber DOL=1.33 plate grip DOL=1.33.
2) This truss requires plate inspection per the Tooth Count Method when this truss is chosen for quality assurance inspection.
3) Refer to girder(s) for truss to truss connections.
4) Provide mechanical connection (by others) of truss to bearing plate capable of withstanding 126 lb uplift at joint 3 and 168 lb uplift at joint 2.

LOAD CASE(S) Standard

Scott W. Miller, FL Lic #58316
MiTek Industries, Inc.
14515 North Outer Forty Drive
Suite 300
Chesterfield, MO, 63017
FL Cert.#6634

March 23,2006

WARNING - Verify design parameters and READ NOTES ON THIS AND INCLUDED MITEK REFERENCE PAGE MII-7473 BEFORE USE.
Design valid for use only with MiTek connectors. This design is based only upon parameters shown, and is for an individual building component. Applicability of design paramenters and proper incorporation of component is responsibility of building designer - not truss designer. Bracing shown is for lateral support of individual web members only. Additional temporary bracing to insure stability during construction is the responsibility of the erector. Additional permanent bracing of the overall structure is the responsibility of the building designer. For general guidance regarding fabrication, quality control, storage, delivery, erection and bracing, consult **ANSI/TPI1 Quality Criteria, DSB-89 and BCSI1 Building Component Safety Information** available from Truss Plate Institute, 583 D'Onofrio Drive, Madison, WI 53719.

14515 N. Outer Forty,
Suite #300
Chesterfield, MO 63017

MiTek

Symbols

PLATE LOCATION AND ORIENTATION

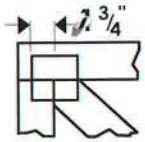

*Center plate on joint unless x, y offsets are indicated. Dimensions are in ft-in-sixteenths. Apply plates to both sides of truss and securely seat.

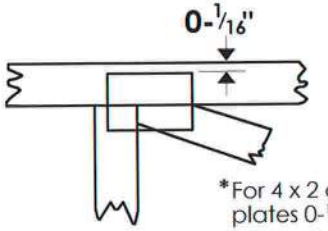

*For 4 x 2 orientation, locate plates 0-1/16" from outside edge of truss.

*This symbol indicates the required direction of slots in connector plates.

***Plate location details available in MiTek 20/20 software or upon request.**

PLATE SIZE

4 x 4

The first dimension is the width perpendicular to slots. Second dimension is the length parallel to slots.

LATERAL BRACING

Indicated by symbol shown and/or by text in the bracing section of the output. Use T, I or Eliminator bracing if indicated.

BEARING

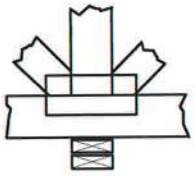

Indicates location where bearings (supports) occur. Icons vary but reaction section indicates joint number where bearings occur.

Industry Standards:

ANSI/TPI1: National Design Specification for Metal Plate Connected Wood Truss Construction.
DSB-89: Design Standard for Bracing.
BCSI1: Building Component Safety Information, Guide to Good Practice for Handling, Installing & Bracing of Metal Plate Connected Wood Trusses

Numbering System

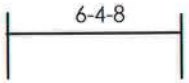

dimensions shown in ft-in-sixteenths

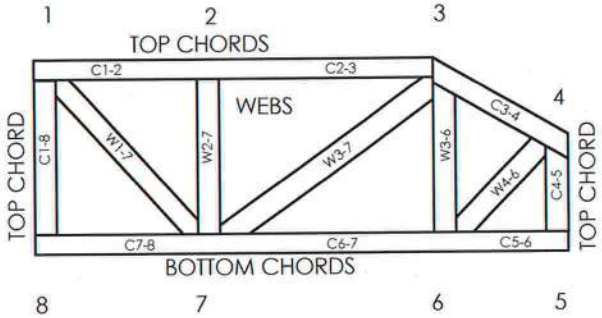

JOINTS ARE GENERALLY NUMBERED/LETTERED CLOCKWISE AROUND THE TRUSS STARTING AT THE JOINT FARTHEST TO THE LEFT.

CHORDS AND WEBS ARE IDENTIFIED BY END JOINT NUMBERS/LETTERS.

CONNECTOR PLATE CODE APPROVALS

BOCA	96-31, 95-43, 96-20-1, 96-67, 84-32
ICBO	4922, 5243, 5363, 3907
SBCCI	9667, 9730, 9604B, 9511, 9432A

MiTek®

TEE-LOK®

MiTek Engineering Reference Sheet: MII-7473

General Safety Notes

Failure to Follow Could Cause Property Damage or Personal Injury

1. Additional stability bracing for truss system, e.g. diagonal or X-bracing, is always required. See BCSI1.
2. Never exceed the design loading shown and never stack materials on inadequately braced trusses.
3. Provide copies of this truss design to the building designer, erection supervisor, property owner and all other interested parties.
4. Cut members to bear tightly against each other.
5. Place plates on each face of truss at each joint and embed fully. Knots and wane at joint locations are regulated by ANSI/TPI1.
6. Design assumes trusses will be suitably protected from the environment in accord with ANSI/TPI1.
7. Unless otherwise noted, moisture content of lumber shall not exceed 19% at time of fabrication.
8. Unless expressly noted, this design is not applicable for use with fire retardant or preservative treated lumber.
9. Camber is a non-structural consideration and is the responsibility of truss fabricator. General practice is to camber for dead load deflection.
10. Plate type, size, orientation and location dimensions shown indicate minimum plating requirements.
11. Lumber used shall be of the species and size, and in all respects, equal to or better than that specified.
12. Top chords must be sheathed or purlins provided at spacing shown on design.
13. Bottom chords require lateral bracing at 10 ft. spacing, or less, if no ceiling is installed, unless otherwise noted.
14. Connections not shown are the responsibility of others.
15. Do not cut or alter truss member or plate without prior approval of a professional engineer.
16. Install and load vertically unless indicated otherwise.

© 2004 MiTek®

Job	Truss	Truss Type	Qty	Ply	0 0
8833	J5A	ROOF TRUSS	2	1	I10050182

Job Reference (optional)

Reese Building Components, Inc., Sylvester Ga.

6.200 s Oct 18 2005 MiTek Industries, Inc. Wed Mar 22 15:38:33 2006 Page 1

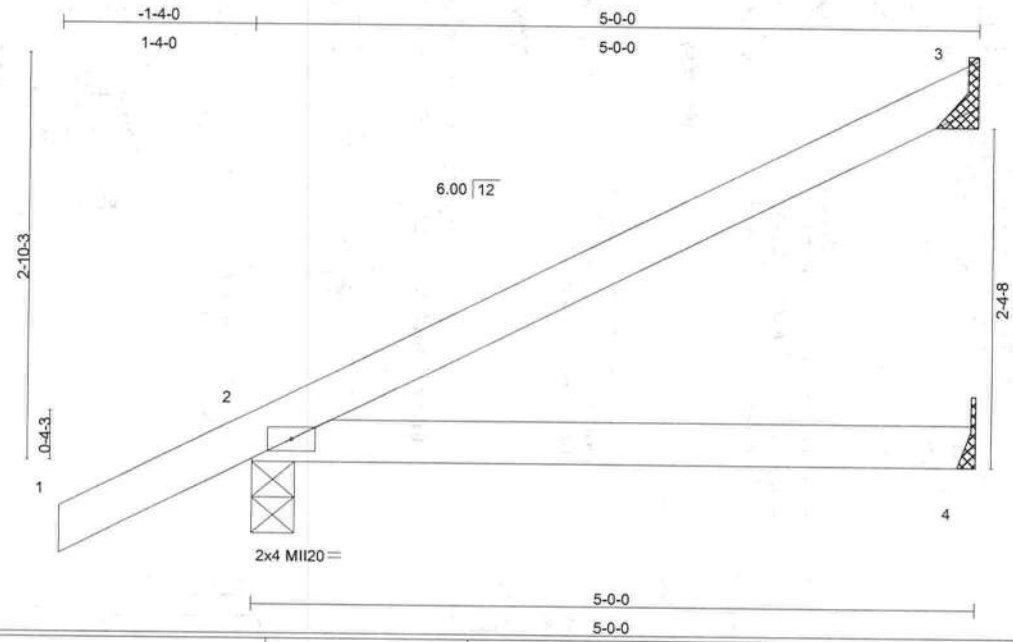

LOADING (psf)		SPACING	2-0-0	CSI		DEFL	in	(loc)	l/defl	L/d	PLATES	GRIP
TCLL	20.0	Plates Increase	1.25	TC	0.25	Vert(LL)	0.00	2	****	360	MII20	249/190
TCDL	10.0	Lumber Increase	1.25	BC	0.11	Vert(TL)	-0.04	2-4	>999	240		
BCLL	0.0	Rep Stress Incr	YES	WB	0.00	Horz(TL)	-0.00	3	n/a	n/a		
BCDL	10.0	Code FBC2004/TPI2002		(Matrix)							Weight: 18 lb	

LUMBER
TOP CHORD 2 X 4 SYP No.2
BOT CHORD 2 X 4 SYP No.2

BRACING
TOP CHORD Structural wood sheathing directly applied or 5-0-0 oc purlins.
BOT CHORD Rigid ceiling directly applied or 10-0-0 oc bracing.

REACTIONS (lb/size) 3=127/Mechanical, 2=292/0-3-8, 4=48/Mechanical
Max Horz 2=187(load case 4)
Max Uplift3=-125(load case 4), 2=-168(load case 4)

FORCES (lb) - Maximum Compression/Maximum Tension
TOP CHORD 1-2=0/35, 2-3=-80/46
BOT CHORD 2-4=0/0

NOTES
1) Wind: ASCE 7-02; 110mph (3-second gust); h=15ft; TCDL=5.0psf; BCDL=5.0psf; Category II; Exp C; enclosed; MWFRS gable end zone; cantilever left and right exposed ; end vertical left and right exposed; Lumber DOL=1.33 plate grip DOL=1.33.
2) This truss requires plate inspection per the Tooth Count Method when this truss is chosen for quality assurance inspection.
3) Refer to girder(s) for truss to truss connections.
4) Provide mechanical connection (by others) of truss to bearing plate capable of withstanding 125 lb uplift at joint 3 and 168 lb uplift at joint 2.

LOAD CASE(S) Standard

Scott W. Miller, FL Lic #58316
MiTek Industries, Inc.
14515 North Outer Forty Drive
Suite 300
Chesterfield, MO, 63017
FL Cert.#6634

March 23,2006

WARNING - Verify design parameters and READ NOTES ON THIS AND INCLUDED MITEK REFERENCE PAGE MII-7473 BEFORE USE.
Design valid for use only with MiTek connectors. This design is based only upon parameters shown, and is for an individual building component. Applicability of design paramenters and proper incorporation of component is responsibility of building designer - not truss designer. Bracing shown is for lateral support of individual web members only. Additional temporary bracing to insure stability during construction is the responsibility of the erector. Additional permanent bracing of the overall structure is the responsibility of the building designer. For general guidance regarding fabrication, quality control, storage, delivery, erection and bracing, consult **ANSI/TPI1 Quality Criteria, DSB-89 and BCSI1 Building Component Safety Information** available from Truss Plate Institute, 583 D'Onofrio Drive, Madison, WI 53719.

14515 N. Outer Forty,
Suite #300
Chesterfield, MO 63017

MiTek®

Symbols

PLATE LOCATION AND ORIENTATION

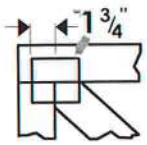

*Center plate on joint unless x, y offsets are indicated. Dimensions are in ft-in-sixteenths. Apply plates to both sides of truss and securely seat.

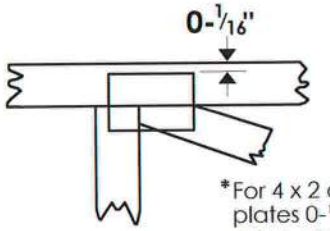

*For 4 x 2 orientation, locate plates 0-1/16" from outside edge of truss.

*This symbol indicates the required direction of slots in connector plates.

***Plate location details available in MiTek 20/20 software or upon request.**

PLATE SIZE

4 x 4

The first dimension is the width perpendicular to slots. Second dimension is the length parallel to slots.

LATERAL BRACING

Indicated by symbol shown and/or by text in the bracing section of the output. Use T, I or Eliminator bracing if indicated.

BEARING

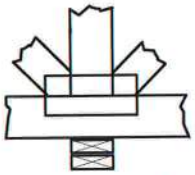

Indicates location where bearings (supports) occur. Icons vary but reaction section indicates joint number where bearings occur.

Industry Standards:

ANSI/TPI1: National Design Specification for Metal Plate Connected Wood Truss Construction.
DSB-89: Design Standard for Bracing.
BCSI1: Building Component Safety Information, Guide to Good Practice for Handling, Installing & Bracing of Metal Plate Connected Wood Trusses

Numbering System

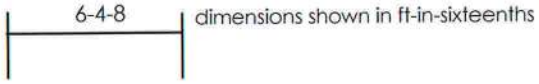

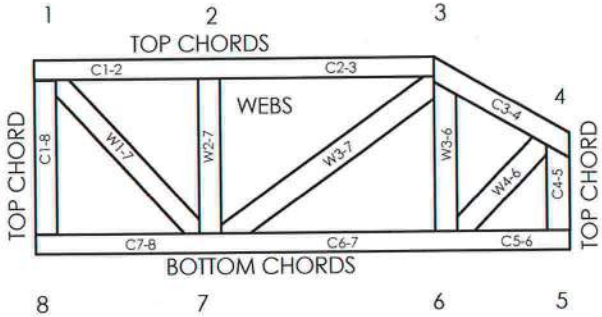

JOINTS ARE GENERALLY NUMBERED/LETTERED CLOCKWISE AROUND THE TRUSS STARTING AT THE JOINT FARTHEST TO THE LEFT.

CHORDS AND WEBS ARE IDENTIFIED BY END JOINT NUMBERS/LETTERS.

CONNECTOR PLATE CODE APPROVALS

BOCA	96-31, 95-43, 96-20-1, 96-67, 84-32
ICBO	4922, 5243, 5363, 3907
SBCCI	9667, 9730, 9604B, 9511, 9432A

MiTek®

TEE-LOK®

MiTek Engineering Reference Sheet: MII-7473

General Safety Notes

Failure to Follow Could Cause Property Damage or Personal Injury

1. Additional stability bracing for truss system, e.g. diagonal or X-bracing, is always required. See BCSI1.
2. Never exceed the design loading shown and never stack materials on inadequately braced trusses.
3. Provide copies of this truss design to the building designer, erection supervisor, property owner and all other interested parties.
4. Cut members to bear tightly against each other.
5. Place plates on each face of truss at each joint and embed fully. Knots and wane at joint locations are regulated by ANSI/TPI1.
6. Design assumes trusses will be suitably protected from the environment in accord with ANSI/TPI1.
7. Unless otherwise noted, moisture content of lumber shall not exceed 19% at time of fabrication.
8. Unless expressly noted, this design is not applicable for use with fire retardant or preservative treated lumber.
9. Camber is a non-structural consideration and is the responsibility of truss fabricator. General practice is to camber for dead load deflection.
10. Plate type, size, orientation and location dimensions shown indicate minimum plating requirements.
11. Lumber used shall be of the species and size, and in all respects, equal to or better than that specified.
12. Top chords must be sheathed or purlins provided at spacing shown on design.
13. Bottom chords require lateral bracing at 10 ft. spacing, or less, if no ceiling is installed, unless otherwise noted.
14. Connections not shown are the responsibility of others.
15. Do not cut or alter truss member or plate without prior approval of a professional engineer.
16. Install and load vertically unless indicated otherwise.

© 2004 MiTek®

Job	Truss	Truss Type	Qty	Ply	0 0
8833	J6	ROOF TRUSS	28	1	I10050183
					Job Reference (optional)

Reese Building Components, Inc., Sylvester Ga.

6.200 s Oct 18 2005 MiTek Industries, Inc. Wed Mar 22 15:38:34 2006 Page 1

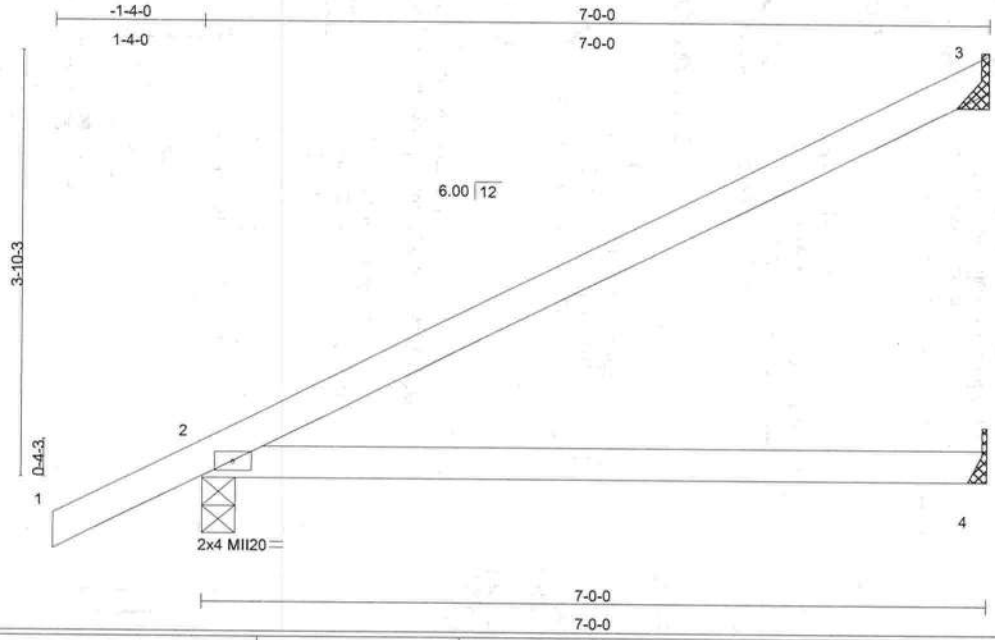

LOADING (psf)		SPACING	2-0-0	CSI		DEFL	in	(loc)	l/defl	L/d	PLATES	GRIP
TCLL	20.0	Plates Increase	1.25	TC	0.56	Vert(LL)	0.00	2	****	360	MII20	249/190
TCDL	10.0	Lumber Increase	1.25	BC	0.22	Vert(TL)	-0.17	2-4	>491	240		
BCLL	0.0	Rep Stress Incr	YES	WB	0.00	Horz(TL)	-0.00	3	n/a	n/a		
BCDL	10.0	Code FBC2004/TPI2002		(Matrix)							Weight: 24 lb	

LUMBER
TOP CHORD 2 X 4 SYP No.2
BOT CHORD 2 X 4 SYP No.2

BRACING
TOP CHORD Structural wood sheathing directly applied or 6-0-0 oc purlins.
BOT CHORD Rigid ceiling directly applied or 10-0-0 oc bracing.

REACTIONS (lb/size) 3=191/Mechanical, 2=367/0-3-8, 4=68/Mechanical
Max Horz 2=243(load case 4)
Max Uplift3=-190(load case 4), 2=-184(load case 4)

FORCES (lb) - Maximum Compression/Maximum Tension
TOP CHORD 1-2=0/35, 2-3=-118/69
BOT CHORD 2-4=0/0

NOTES
1) Wind: ASCE 7-02; 110mph (3-second gust); h=15ft; TCDL=5.0psf; BCDL=5.0psf; Category II; Exp C; enclosed; MWFRS gable end zone; cantilever left and right exposed ; end vertical left and right exposed; Lumber DOL=1.33 plate grip DOL=1.33.
2) This truss requires plate inspection per the Tooth Count Method when this truss is chosen for quality assurance inspection.
3) Refer to girder(s) for truss to truss connections.
4) Provide mechanical connection (by others) of truss to bearing plate capable of withstanding 190 lb uplift at joint 3 and 184 lb uplift at joint 2.

LOAD CASE(S) Standard

Scott W. Miller, FL Lic #58316
MiTek Industries, Inc.
14515 North Outer Forty Drive
Suite 300
Chesterfield, MO, 63017
FL Cert.#6634

March 23,2006

WARNING - Verify design parameters and READ NOTES ON THIS AND INCLUDED MITEK REFERENCE PAGE MII-7473 BEFORE USE.
Design valid for use only with MiTek connectors. This design is based only upon parameters shown, and is for an individual building component. Applicability of design paramenters and proper incorporation of component is responsibility of building designer - not truss designer. Bracing shown is for lateral support of individual web members only. Additional temporary bracing to insure stability during construction is the responsibility of the erector. Additional permanent bracing of the overall structure is the responsibility of the building designer. For general guidance regarding fabrication, quality control, storage, delivery, erection and bracing, consult **ANSI/TPI1 Quality Criteria, DSB-89 and BCSI1 Building Component Safety Information** available from Truss Plate Institute, 583 D'Onofrio Drive, Madison, WI 53719.

14515 N. Outer Forty,
Suite #300
Chesterfield, MO 63017

Symbols

PLATE LOCATION AND ORIENTATION

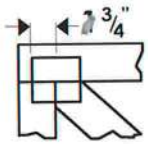

*Center plate on joint unless x, y offsets are indicated. Dimensions are in ft-in-sixteenths. Apply plates to both sides of truss and securely seat.

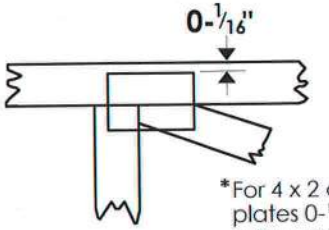

*For 4 x 2 orientation, locate plates 0-1/16" from outside edge of truss.

*This symbol indicates the required direction of slots in connector plates.

***Plate location details available in MiTek 20/20 software or upon request.**

PLATE SIZE

4 x 4

The first dimension is the width perpendicular to slots. Second dimension is the length parallel to slots.

LATERAL BRACING

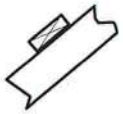

Indicated by symbol shown and/or by text in the bracing section of the output. Use T, I or Eliminator bracing if indicated.

BEARING

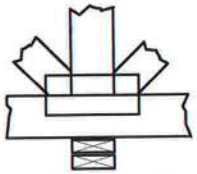

Indicates location where bearings (supports) occur. Icons vary but reaction section indicates joint number where bearings occur.

Industry Standards:

ANSI/TPI1: National Design Specification for Metal Plate Connected Wood Truss Construction.
DSB-89: Design Standard for Bracing.
BCSI1: Building Component Safety Information, Guide to Good Practice for Handling, Installing & Bracing of Metal Plate Connected Wood Trusses

Numbering System

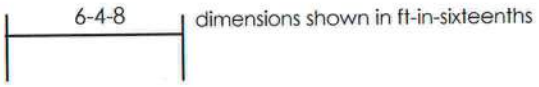

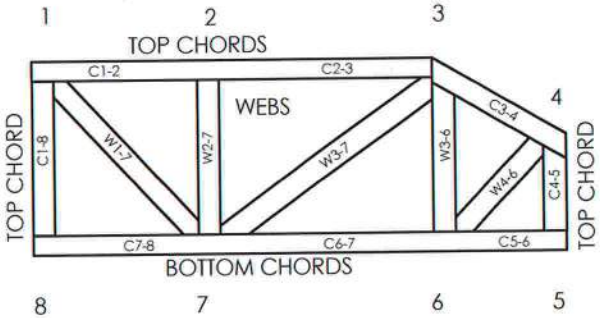

JOINTS ARE GENERALLY NUMBERED/LETTERED CLOCKWISE AROUND THE TRUSS STARTING AT THE JOINT FARTHEST TO THE LEFT.

CHORDS AND WEBS ARE IDENTIFIED BY END JOINT NUMBERS/LETTERS.

CONNECTOR PLATE CODE APPROVALS

BOCA	96-31, 95-43, 96-20-1, 96-67, 84-32
ICBO	4922, 5243, 5363, 3907
SBCCI	9667, 9730, 9604B, 9511, 9432A

MiTek®

TEE-LOK®

MiTek Engineering Reference Sheet: MII-7473

General Safety Notes

Failure to Follow Could Cause Property Damage or Personal Injury

1. Additional stability bracing for truss system, e.g. diagonal or X-bracing, is always required. See BCSI1.
2. Never exceed the design loading shown and never stack materials on inadequately braced trusses.
3. Provide copies of this truss design to the building designer, erection supervisor, property owner and all other interested parties.
4. Cut members to bear tightly against each other.
5. Place plates on each face of truss at each joint and embed fully. Knots and wane at joint locations are regulated by ANSI/TPI1.
6. Design assumes trusses will be suitably protected from the environment in accord with ANSI/TPI1.
7. Unless otherwise noted, moisture content of lumber shall not exceed 19% at time of fabrication.
8. Unless expressly noted, this design is not applicable for use with fire retardant or preservative treated lumber.
9. Camber is a non-structural consideration and is the responsibility of truss fabricator. General practice is to camber for dead load deflection.
10. Plate type, size, orientation and location dimensions shown indicate minimum plating requirements.
11. Lumber used shall be of the species and size, and in all respects, equal to or better than that specified.
12. Top chords must be sheathed or purlins provided at spacing shown on design.
13. Bottom chords require lateral bracing at 10 ft. spacing, or less, if no ceiling is installed, unless otherwise noted.
14. Connections not shown are the responsibility of others.
15. Do not cut or alter truss member or plate without prior approval of a professional engineer.
16. Install and load vertically unless indicated otherwise.

© 2004 MiTek®

Job	Truss	Truss Type	Qty	Ply	0 0
8833	T1	BOSTON HIP	1	2	I10050184

Job Reference (optional)

Reese Building Components, Inc., Sylvester Ga.

6.200 s Oct 18 2005 MiTek Industries, Inc. Wed Mar 22 15:38:34 2006 Page 1

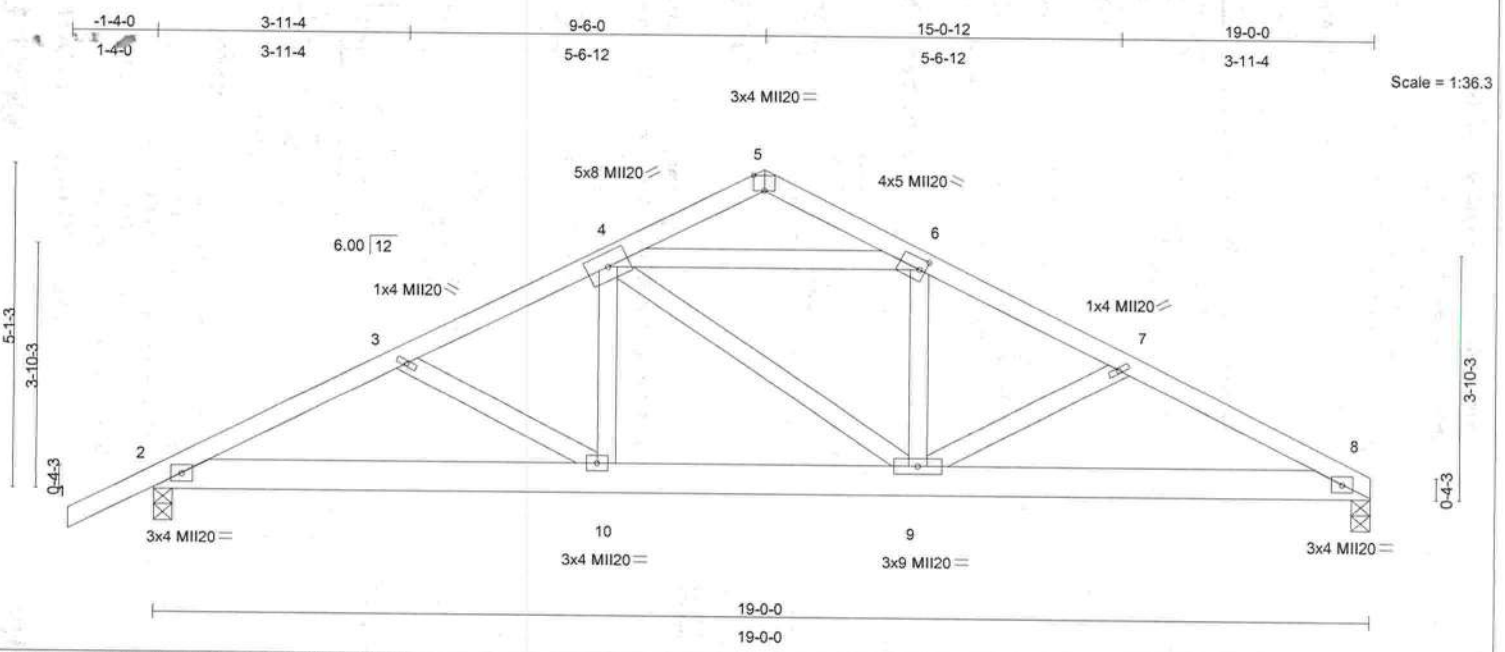

Plate Offsets (X,Y): [5:0-2-0,Edge], [6:0-1-0,0-2-0]

LOADING (psf)		SPACING	2-0-0	CSI		DEFL	in	(loc)	l/defl	L/d	PLATES	GRIP
TCLL	20.0	Plates Increase	1.25	TC	0.18	Vert(LL)	0.05	9-10	>999	360	MII20	249/190
TCDL	10.0	Lumber Increase	1.25	BC	0.24	Vert(TL)	-0.09	9-10	>999	240		
BCLL	0.0	Rep Stress Incr	NO	WB	0.13	Horz(TL)	0.03	8	n/a	n/a		
BCDL	10.0	Code FBC2004/TPI2002		(Matrix)							Weight: 227 lb	

LUMBER
TOP CHORD 2 X 4 SYP No.2
BOT CHORD 2 X 6 SYP No.2
WEBS 2 X 4 SYP No.3

BRACING
TOP CHORD Structural wood sheathing directly applied or 6-0-0 oc purlins.
BOT CHORD Rigid ceiling directly applied or 10-0-0 oc bracing.

REACTIONS (lb/size) 2=1574/0-3-8, 8=1483/0-3-8
Max Horz 2=125(load case 4)
Max Uplift2=-847(load case 4), 8=-761(load case 5)

FORCES (lb) - Maximum Compression/Maximum Tension
TOP CHORD 1-2=0/38, 2-3=-2927/1491, 3-4=-2718/1428, 4-5=-458/356, 5-6=-469/352, 6-7=-2743/1469, 7-8=-2950/1564, 4-6=-2058/1132
BOT CHORD 2-10=-1333/2562, 9-10=-1143/2341, 8-9=-1332/2585
WEBS 4-10=-311/787, 6-9=-293/741, 4-9=-119/219, 3-10=-200/195, 7-9=-198/197

NOTES
1) 2-ply truss to be connected together with 10d Common(.148"x3") Nails as follows:
Top chords connected as follows: 2 X 4 - 1 row at 0-9-0 oc.
Bottom chords connected as follows: 2 X 6 - 2 rows at 0-9-0 oc.
Webs connected as follows: 2 X 4 - 1 row at 0-9-0 oc.
2) All loads are considered equally applied to all plies, except if noted as front (F) or back (B) face in the LOAD CASE(S) section. Ply to ply connections have been provided to distribute only loads noted as (F) or (B), unless otherwise indicated.
3) Unbalanced roof live loads have been considered for this design.
4) Wind: ASCE 7-02; 110mph (3-second gust); h=15ft; TCDL=5.0psf; BCDL=5.0psf; Category II; Exp C; enclosed; MWFRS gable end zone; cantilever left and right exposed ; end vertical left and right exposed; Lumber DOL=1.33 plate grip DOL=1.33.
5) Provide adequate drainage to prevent water ponding.
6) This truss requires plate inspection per the Tooth Count Method when this truss is chosen for quality assurance inspection.
7) Provide mechanical connection (by others) of truss to bearing plate capable of withstanding 847 lb uplift at joint 2 and 761 lb uplift at joint 8.
8) Girder carries hip end with 7-0-0 end setback.
9) Design assumes 4x2 (flat orientation) purlins at oc spacing indicated, fastened to truss TC w/ 2-10d nails.
10) Hanger(s) or other connection device(s) shall be provided sufficient to support concentrated load(s) 513 lb down and 320 lb up at 12-0-0, and 513 lb down and 320 lb up at 7-0-0 on bottom chord. The design/selection of such connection device(s) is the responsibility of others.

LOAD CASE(S) Standard

Continued on page 2

Scott W. Miller, FL Lic #58316
MiTek Industries, Inc.
14515 North Outer Forty Drive
Suite 300
Chesterfield, MO, 63017
FL Cert.#6634

March 23,2006

WARNING - Verify design parameters and READ NOTES ON THIS AND INCLUDED MITEK REFERENCE PAGE MII-7473 BEFORE USE.
Design valid for use only with MiTek connectors. This design is based only upon parameters shown, and is for an individual building component. Applicability of design paramenters and proper incorporation of component is responsibility of building designer - not truss designer. Bracing shown is for lateral support of individual web members only. Additional temporary bracing to insure stability during construction is the responsibility of the erector. Additional permanent bracing of the overall structure is the responsibility of the building designer. For general guidance regarding fabrication, quality control, storage, delivery, erection and bracing, consult **ANSI/TPI1 Quality Criteria, DSB-89 and BCSI1 Building Component Safety Information** available from Truss Plate Institute, 583 D'Onofrio Drive, Madison, WI 53719.

14515 N. Outer Forty,
Suite #300
Chesterfield, MO 63017

MiTek®

Symbols

PLATE LOCATION AND ORIENTATION

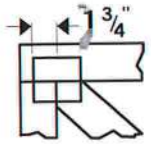

*Center plate on joint unless x, y offsets are indicated. Dimensions are in ft-in-sixteenths. Apply plates to both sides of truss and securely seat.

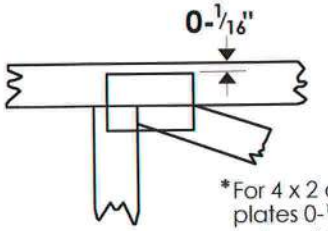

*For 4 x 2 orientation, locate plates 0-1/16" from outside edge of truss.

*This symbol indicates the required direction of slots in connector plates.

***Plate location details available in MiTek 20/20 software or upon request.**

PLATE SIZE

4 x 4

The first dimension is the width perpendicular to slots. Second dimension is the length parallel to slots.

LATERAL BRACING

Indicated by symbol shown and/or by text in the bracing section of the output. Use T, I or Eliminator bracing if indicated.

BEARING

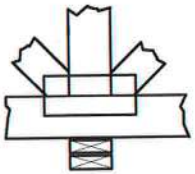

Indicates location where bearings (supports) occur. Icons vary but reaction section indicates joint number where bearings occur.

Industry Standards:

ANSI/TPI1: National Design Specification for Metal Plate Connected Wood Truss Construction.

DSB-89: Design Standard for Bracing.

BCSI1: Building Component Safety Information, Guide to Good Practice for Handling, Installing & Bracing of Metal Plate Connected Wood Trusses

Numbering System

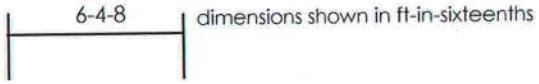

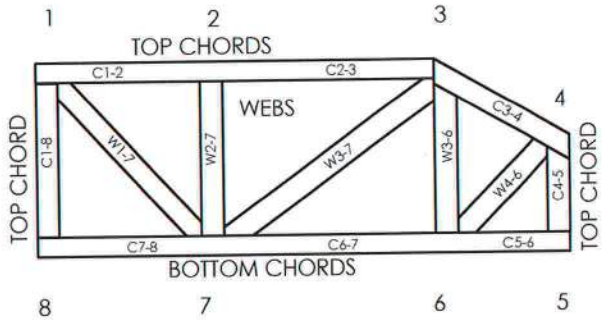

JOINTS ARE GENERALLY NUMBERED/LETTERED CLOCKWISE AROUND THE TRUSS STARTING AT THE JOINT FARTHEST TO THE LEFT.

CHORDS AND WEBS ARE IDENTIFIED BY END JOINT NUMBERS/LETTERS.

CONNECTOR PLATE CODE APPROVALS

BOCA	96-31, 95-43, 96-20-1, 96-67, 84-32
ICBO	4922, 5243, 5363, 3907
SBCCI	9667, 9730, 9604B, 9511, 9432A

MiTek®

TEE-LOK®

MiTek Engineering Reference Sheet: MII-7473

General Safety Notes

Failure to Follow Could Cause Property Damage or Personal Injury

1. Additional stability bracing for truss system, e.g. diagonal or X-bracing, is always required. See BCSI1.
2. Never exceed the design loading shown and never stack materials on inadequately braced trusses.
3. Provide copies of this truss design to the building designer, erection supervisor, property owner and all other interested parties.
4. Cut members to bear tightly against each other.
5. Place plates on each face of truss at each joint and embed fully. Knots and wane at joint locations are regulated by ANSI/TPI1.
6. Design assumes trusses will be suitably protected from the environment in accord with ANSI/TPI1.
7. Unless otherwise noted, moisture content of lumber shall not exceed 19% at time of fabrication.
8. Unless expressly noted, this design is not applicable for use with fire retardant or preservative treated lumber.
9. Camber is a non-structural consideration and is the responsibility of truss fabricator. General practice is to camber for dead load deflection.
10. Plate type, size, orientation and location dimensions shown indicate minimum plating requirements.
11. Lumber used shall be of the species and size, and in all respects, equal to or better than that specified.
12. Top chords must be sheathed or purlins provided at spacing shown on design.
13. Bottom chords require lateral bracing at 10 ft. spacing, or less, if no ceiling is installed, unless otherwise noted.
14. Connections not shown are the responsibility of others.
15. Do not cut or alter truss member or plate without prior approval of a professional engineer.
16. Install and load vertically unless indicated otherwise.

© 2004 MiTek®

LOAD CASE(S) Standard

1) Regular: Lumber Increase=1.25, Plate Increase=1.25

Uniform Loads (plf)

Vert: 2-10=-20, 9-10=-44(F=-24), 8-9=-20, 1-4=-60, 4-5=-131(F=-71), 5-6=-131(F=-71), 6-8=-60

Concentrated Loads (lb)

Vert: 10=-513(F) 9=-513(F)

WARNING - Verify design parameters and READ NOTES ON THIS AND INCLUDED MITEK REFERENCE PAGE MII-7473 BEFORE USE.

Design valid for use only with MiTek connectors. This design is based only upon parameters shown, and is for an individual building component. Applicability of design paramenters and proper incorporation of component is responsibility of building designer - not truss designer. Bracing shown is for lateral support of individual web members only. Additional temporary bracing to insure stability during construction is the responsibility of the erector. Additional permanent bracing of the overall structure is the responsibility of the building designer. For general guidance regarding fabrication, quality control, storage, delivery, erection and bracing, consult **ANSI/TPI1 Quality Criteria, DSB-89 and BCSI1 Building Component Safety Information** available from Truss Plate Institute, 583 D'Onofrio Drive, Madison, WI 53719.

14515 N. Outer Forty,
Suite #300
Chesterfield, MO 63017

MiTek®

Symbols

PLATE LOCATION AND ORIENTATION

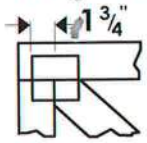

*Center plate on joint unless x, y offsets are indicated. Dimensions are in ft-in-sixteenths. Apply plates to both sides of truss and securely seat.

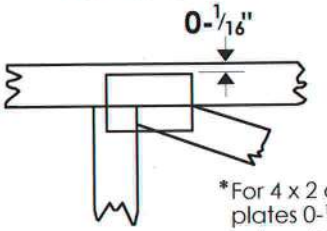

*For 4 x 2 orientation, locate plates 0-1/16" from outside edge of truss.

*This symbol indicates the required direction of slots in connector plates.

***Plate location details available in MiTek 20/20 software or upon request.**

PLATE SIZE

4 x 4

The first dimension is the width perpendicular to slots. Second dimension is the length parallel to slots.

LATERAL BRACING

Indicated by symbol shown and/or by text in the bracing section of the output. Use T, I or Eliminator bracing if indicated.

BEARING

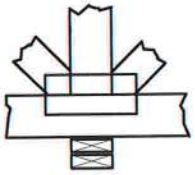

Indicates location where bearings (supports) occur. Icons vary but reaction section indicates joint number where bearings occur.

Industry Standards:

ANSI/TPI1: National Design Specification for Metal Plate Connected Wood Truss Construction.
DSB-89: Design Standard for Bracing.
BCSI1: Building Component Safety Information, Guide to Good Practice for Handling, Installing & Bracing of Metal Plate Connected Wood Trusses

Numbering System

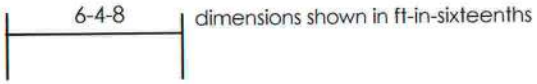

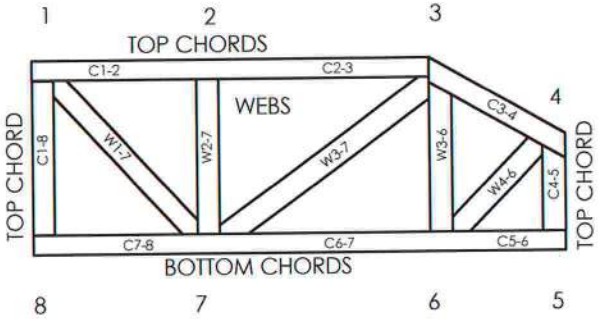

JOINTS ARE GENERALLY NUMBERED/LETTERED CLOCKWISE AROUND THE TRUSS STARTING AT THE JOINT FARTHEST TO THE LEFT.

CHORDS AND WEBS ARE IDENTIFIED BY END JOINT NUMBERS/LETTERS.

CONNECTOR PLATE CODE APPROVALS

BOCA	96-31, 95-43, 96-20-1, 96-67, 84-32
ICBO	4922, 5243, 5363, 3907
SBCCI	9667, 9730, 9604B, 9511, 9432A

MiTek®

TEE-LOK®

MiTek Engineering Reference Sheet: MII-7473

General Safety Notes

Failure to Follow Could Cause Property Damage or Personal Injury

1. Additional stability bracing for truss system, e.g. diagonal or X-bracing, is always required. See BCSI1.
2. Never exceed the design loading shown and never stack materials on inadequately braced trusses.
3. Provide copies of this truss design to the building designer, erection supervisor, property owner and all other interested parties.
4. Cut members to bear tightly against each other.
5. Place plates on each face of truss at each joint and embed fully. Knots and wane at joint locations are regulated by ANSI/TPI1.
6. Design assumes trusses will be suitably protected from the environment in accord with ANSI/TPI1.
7. Unless otherwise noted, moisture content of lumber shall not exceed 19% at time of fabrication.
8. Unless expressly noted, this design is not applicable for use with fire retardant or preservative treated lumber.
9. Camber is a non-structural consideration and is the responsibility of truss fabricator. General practice is to camber for dead load deflection.
10. Plate type, size, orientation and location dimensions shown indicate minimum plating requirements.
11. Lumber used shall be of the species and size, and in all respects, equal to or better than that specified.
12. Top chords must be sheathed or purlins provided at spacing shown on design.
13. Bottom chords require lateral bracing at 10 ft. spacing, or less, if no ceiling is installed, unless otherwise noted.
14. Connections not shown are the responsibility of others.
15. Do not cut or alter truss member or plate without prior approval of a professional engineer.
16. Install and load vertically unless indicated otherwise.

© 2004 MiTek®

Job	Truss	Truss Type	Qty	Ply	0 0
8833	T2	ROOF TRUSS	3	1	I10050185 Job Reference (optional)

Reese Building Components, Inc., Sylvester Ga. 6.200 s Oct 18 2005 MiTek Industries, Inc. Wed Mar 22 15:38:34 2006 Page 1

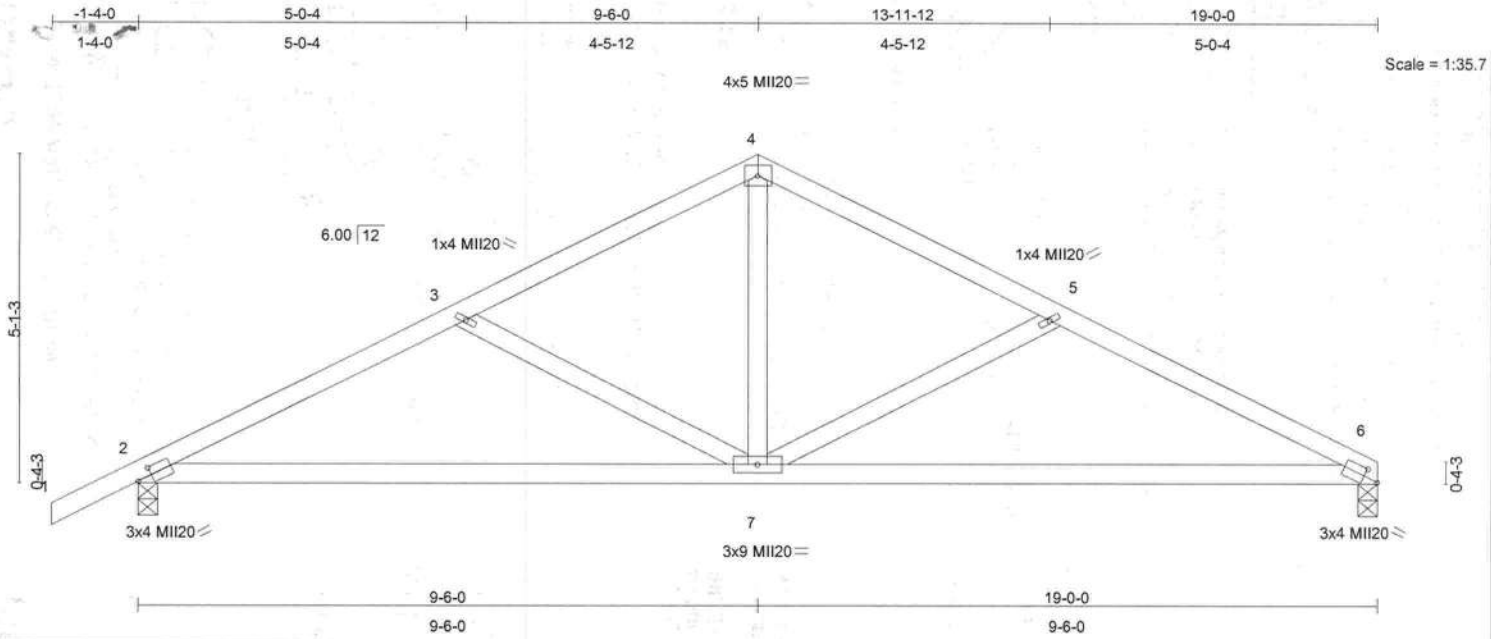

Plate Offsets (X,Y): [2:0-2-10,0-1-8], [6:0-2-10,0-1-8]

LOADING (psf)		SPACING	2-0-0	CSI		DEFL	in	(loc)	l/defl	L/d	PLATES	GRIP
TCLL	20.0	Plates Increase	1.25	TC	0.27	Vert(LL)	0.06	6-7	>999	360	MII20	249/190
TCDL	10.0	Lumber Increase	1.25	BC	0.43	Vert(TL)	-0.26	6-7	>855	240		
BCLL	0.0	Rep Stress Incr	YES	WB	0.17	Horz(TL)	0.04	6	n/a	n/a		
BCDL	10.0	Code FBC2004/TPI2002		(Matrix)							Weight: 84 lb	

LUMBER
TOP CHORD 2 X 4 SYP No.2
BOT CHORD 2 X 4 SYP No.2
WEBS 2 X 4 SYP No.3

BRACING
TOP CHORD Structural wood sheathing directly applied or 5-2-11 oc purlins.
BOT CHORD Rigid ceiling directly applied or 9-7-1 oc bracing.

REACTIONS (lb/size) 6=745/0-3-8, 2=841/0-3-8
Max Horz 2=131(load case 4)
Max Uplift6=-284(load case 5), 2=-391(load case 4)

FORCES (lb) - Maximum Compression/Maximum Tension
TOP CHORD 1-2=0/35, 2-3=-1237/481, 3-4=-940/364, 4-5=-941/356, 5-6=-1247/503
BOT CHORD 2-7=-425/1060, 6-7=-369/1073
WEBS 3-7=-334/287, 4-7=-133/517, 5-7=-349/308

NOTES
1) Unbalanced roof live loads have been considered for this design.
2) Wind: ASCE 7-02; 110mph (3-second gust); h=15ft; TCDL=5.0psf; BCDL=5.0psf; Category II; Exp C; enclosed; MWFRS gable end zone; cantilever left and right exposed ; end vertical left and right exposed; Lumber DOL=1.33 plate grip DOL=1.33.
3) This truss requires plate inspection per the Tooth Count Method when this truss is chosen for quality assurance inspection.
4) Provide mechanical connection (by others) of truss to bearing plate capable of withstanding 284 lb uplift at joint 6 and 391 lb uplift at joint 2.

LOAD CASE(S) Standard

Scott W. Miller, FL Lic #58316
MiTek Industries, Inc.
14515 North Outer Forty Drive
Suite 300
Chesterfield, MO, 63017
FL Cert.#6634

March 23,2006

WARNING - Verify design parameters and READ NOTES ON THIS AND INCLUDED MITEK REFERENCE PAGE MII-7473 BEFORE USE.
Design valid for use only with MiTek connectors. This design is based only upon parameters shown, and is for an individual building component. Applicability of design paramenters and proper incorporation of component is responsibility of building designer - not truss designer. Bracing shown is for lateral support of individual web members only. Additional temporary bracing to insure stability during construction is the responsibility of the erector. Additional permanent bracing of the overall structure is the responsibility of the building designer. For general guidance regarding fabrication, quality control, storage, delivery, erection and bracing, consult **ANSI/TPI1 Quality Criteria, DSB-89 and BCSI1 Building Component Safety Information** available from Truss Plate Institute, 583 D'Onofrio Drive, Madison, WI 53719.

14515 N. Outer Forty,
Suite #300
Chesterfield, MO 63017

Symbols

PLATE LOCATION AND ORIENTATION

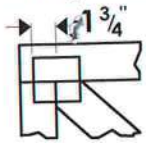

*Center plate on joint unless x, y offsets are indicated. Dimensions are in ft-in-sixteenths. Apply plates to both sides of truss and securely seat.

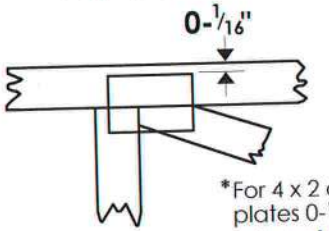

*For 4 x 2 orientation, locate plates 0-1/16" from outside edge of truss.

*This symbol indicates the required direction of slots in connector plates.

***Plate location details available in MiTek 20/20 software or upon request.**

PLATE SIZE

4 x 4

The first dimension is the width perpendicular to slots. Second dimension is the length parallel to slots.

LATERAL BRACING

Indicated by symbol shown and/or by text in the bracing section of the output. Use T, I or Eliminator bracing if indicated.

BEARING

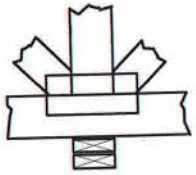

Indicates location where bearings (supports) occur. Icons vary but reaction section indicates joint number where bearings occur.

Industry Standards:

ANSI/TPI1: National Design Specification for Metal Plate Connected Wood Truss Construction.

DSB-89: Design Standard for Bracing.

BCSI1: Building Component Safety Information, Guide to Good Practice for Handling, Installing & Bracing of Metal Plate Connected Wood Trusses

Numbering System

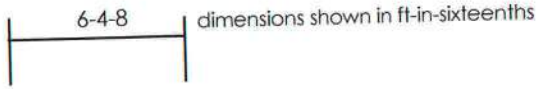

dimensions shown in ft-in-sixteenths

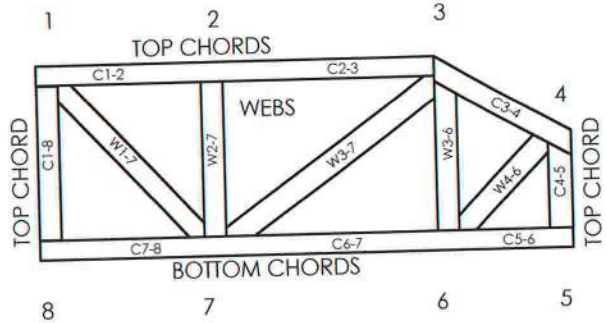

JOINTS ARE GENERALLY NUMBERED/LETTERED CLOCKWISE AROUND THE TRUSS STARTING AT THE JOINT FARTHEST TO THE LEFT.

CHORDS AND WEBS ARE IDENTIFIED BY END JOINT NUMBERS/LETTERS.

CONNECTOR PLATE CODE APPROVALS

BOCA	96-31, 95-43, 96-20-1, 96-67, 84-32
ICBO	4922, 5243, 5363, 3907
SBCCI	9667, 9730, 9604B, 9511, 9432A

MiTek®

TEE-LOK®

MiTek Engineering Reference Sheet: MII-7473

General Safety Notes

Failure to Follow Could Cause Property Damage or Personal Injury

1. Additional stability bracing for truss system, e.g. diagonal or X-bracing, is always required. See BCSI1.
2. Never exceed the design loading shown and never stack materials on inadequately braced trusses.
3. Provide copies of this truss design to the building designer, erection supervisor, property owner and all other interested parties.
4. Cut members to bear tightly against each other.
5. Place plates on each face of truss at each joint and embed fully. Knots and wane at joint locations are regulated by ANSI/TPI1.
6. Design assumes trusses will be suitably protected from the environment in accord with ANSI/TPI1.
7. Unless otherwise noted, moisture content of lumber shall not exceed 19% at time of fabrication.
8. Unless expressly noted, this design is not applicable for use with fire retardant or preservative treated lumber.
9. Camber is a non-structural consideration and is the responsibility of truss fabricator. General practice is to camber for dead load deflection.
10. Plate type, size, orientation and location dimensions shown indicate minimum plating requirements.
11. Lumber used shall be of the species and size, and in all respects, equal to or better than that specified.
12. Top chords must be sheathed or purlins provided at spacing shown on design.
13. Bottom chords require lateral bracing at 10 ft. spacing, or less, if no ceiling is installed, unless otherwise noted.
14. Connections not shown are the responsibility of others.
15. Do not cut or alter truss member or plate without prior approval of a professional engineer.
16. Install and load vertically unless indicated otherwise.

© 2004 MiTek®

Job	Truss	Truss Type	Qty	Ply	0 0
8833	T4	ROOF TRUSS	3	1	I10050187
					Job Reference (optional)

Reese Building Components, Inc., Sylvester Ga.

6.200 s Oct 18 2005 MiTek Industries, Inc. Wed Mar 22 15:38:35 2006 Page 1

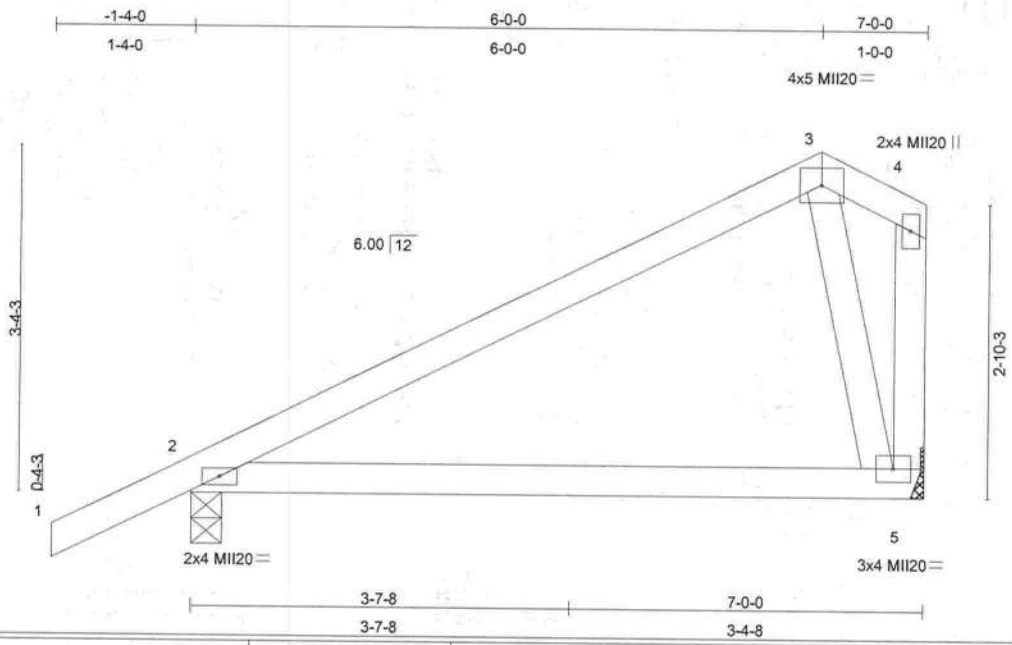

LOADING (psf)		SPACING	2-0-0	CSI		DEFL	in	(loc)	l/defl	L/d	PLATES	GRIP
TCLL	20.0	Plates Increase	1.25	TC	0.41	Vert(LL)	0.00	2	>999	360	MII20	249/190
TCDL	10.0	Lumber Increase	1.25	BC	0.22	Vert(TL)	-0.16	2-5	>505	240		
BCLL	0.0	Rep Stress Incr	YES	WB	0.04	Horz(TL)	-0.00	5	n/a	n/a		
BCDL	10.0	Code FBC2004/TPI2002		(Matrix)							Weight: 32 lb	

LUMBER
TOP CHORD 2 X 4 SYP No.2
BOT CHORD 2 X 4 SYP No.2
WEBS 2 X 4 SYP No.3

BRACING
TOP CHORD Structural wood sheathing directly applied or 6-0-0 oc purlins, except end verticals.
BOT CHORD Rigid ceiling directly applied or 10-0-0 oc bracing.

REACTIONS (lb/size) 2=367/0-3-8, 5=259/Mechanical
Max Horz 2=173(load case 3)
Max Uplift2=-217(load case 4), 5=-110(load case 4)

FORCES (lb) - Maximum Compression/Maximum Tension
TOP CHORD 1-2=0/35, 2-3=-139/41, 3-4=-31/56, 4-5=-26/44
BOT CHORD 2-5=-60/47
WEBS 3-5=-172/113

NOTES
1) Unbalanced roof live loads have been considered for this design.
2) Wind: ASCE 7-02; 110mph (3-second gust); h=15ft; TCDL=5.0psf; BCDL=5.0psf; Category II; Exp C; enclosed; MWFRS gable end zone; cantilever left and right exposed ; end vertical left and right exposed; Lumber DOL=1.33 plate grip DOL=1.33.
3) This truss requires plate inspection per the Tooth Count Method when this truss is chosen for quality assurance inspection.
4) Refer to girder(s) for truss to truss connections.
5) Provide mechanical connection (by others) of truss to bearing plate capable of withstanding 217 lb uplift at joint 2 and 110 lb uplift at joint 5.

LOAD CASE(S) Standard

Scott W. Miller, FL Lic #58316
MiTek Industries, Inc.
14515 North Outer Forty Drive
Suite 300
Chesterfield, MO, 63017
FL Cert.#6634

March 23,2006

WARNING - Verify design parameters and READ NOTES ON THIS AND INCLUDED MITEK REFERENCE PAGE MII-7473 BEFORE USE.
Design valid for use only with MiTek connectors. This design is based only upon parameters shown, and is for an individual building component. Applicability of design paramenters and proper incorporation of component is responsibility of building designer - not truss designer. Bracing shown is for lateral support of individual web members only. Additional temporary bracing to insure stability during construction is the responsibility of the erector. Additional permanent bracing of the overall structure is the responsibility of the building designer. For general guidance regarding fabrication, quality control, storage, delivery, erection and bracing, consult **ANSI/TPI1 Quality Criteria, DSB-89 and BCSI1 Building Component Safety Information** available from Truss Plate Institute, 583 D'Onofrio Drive, Madison, WI 53719.

14515 N. Outer Forty,
Suite #300
Chesterfield, MO 63017

MiTek®

Symbols

PLATE LOCATION AND ORIENTATION

*Center plate on joint unless x, y offsets are indicated. Dimensions are in ft-in-sixteenths. Apply plates to both sides of truss and securely seat.

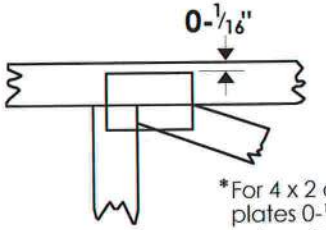

*For 4 x 2 orientation, locate plates 0-1/16" from outside edge of truss.

*This symbol indicates the required direction of slots in connector plates.

***Plate location details available in MiTek 20/20 software or upon request.**

PLATE SIZE

4 x 4

The first dimension is the width perpendicular to slots. Second dimension is the length parallel to slots.

LATERAL BRACING

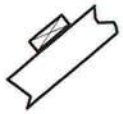

Indicated by symbol shown and/or by text in the bracing section of the output. Use T, I or Eliminator bracing if indicated.

BEARING

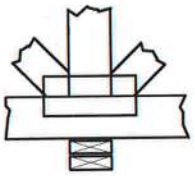

Indicates location where bearings (supports) occur. Icons vary but reaction section indicates joint number where bearings occur.

Industry Standards:

ANSI/TPI1: National Design Specification for Metal Plate Connected Wood Truss Construction.
DSB-89: Design Standard for Bracing.
BCSI1: Building Component Safety Information, Guide to Good Practice for Handling, Installing & Bracing of Metal Plate Connected Wood Trusses

Numbering System

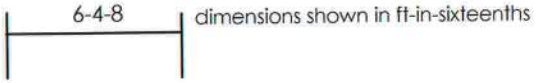

dimensions shown in ft-in-sixteenths

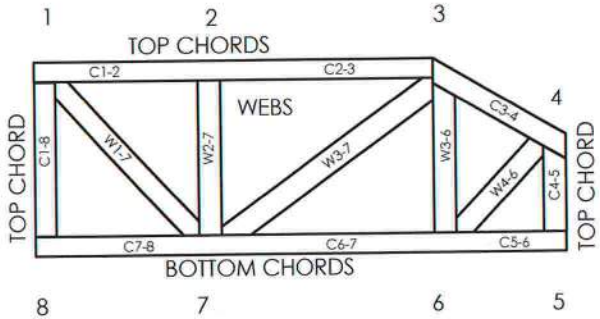

JOINTS ARE GENERALLY NUMBERED/LETTERED CLOCKWISE AROUND THE TRUSS STARTING AT THE JOINT FARTHEST TO THE LEFT.

CHORDS AND WEBS ARE IDENTIFIED BY END JOINT NUMBERS/LETTERS.

CONNECTOR PLATE CODE APPROVALS

BOCA	96-31, 95-43, 96-20-1, 96-67, 84-32
ICBO	4922, 5243, 5363, 3907
SBCCI	9667, 9730, 9604B, 9511, 9432A

MiTek®

TEE-LOK®

MiTek Engineering Reference Sheet: MII-7473

General Safety Notes

Failure to Follow Could Cause Property Damage or Personal Injury

1. Additional stability bracing for truss system, e.g. diagonal or X-bracing, is always required. See BCSI1.
2. Never exceed the design loading shown and never stack materials on inadequately braced trusses.
3. Provide copies of this truss design to the building designer, erection supervisor, property owner and all other interested parties.
4. Cut members to bear tightly against each other.
5. Place plates on each face of truss at each joint and embed fully. Knots and wane at joint locations are regulated by ANSI/TPI1.
6. Design assumes trusses will be suitably protected from the environment in accord with ANSI/TPI1.
7. Unless otherwise noted, moisture content of lumber shall not exceed 19% at time of fabrication.
8. Unless expressly noted, this design is not applicable for use with fire retardant or preservative treated lumber.
9. Camber is a non-structural consideration and is the responsibility of truss fabricator. General practice is to camber for dead load deflection.
10. Plate type, size, orientation and location dimensions shown indicate minimum plating requirements.
11. Lumber used shall be of the species and size, and in all respects, equal to or better than that specified.
12. Top chords must be sheathed or purlins provided at spacing shown on design.
13. Bottom chords require lateral bracing at 10 ft. spacing, or less, if no ceiling is installed, unless otherwise noted.
14. Connections not shown are the responsibility of others.
15. Do not cut or alter truss member or plate without prior approval of a professional engineer.
16. Install and load vertically unless indicated otherwise.

© 2004 MiTek®

Job	Truss	Truss Type	Qty	Ply	0 0
8833	T6	ROOF TRUSS	4	1	I10050188
					Job Reference (optional)

Reese Building Components, Inc., Sylvester Ga.

6.200 s Oct 18 2005 MiTek Industries, Inc. Wed Mar 22 15:38:35 2006 Page 1

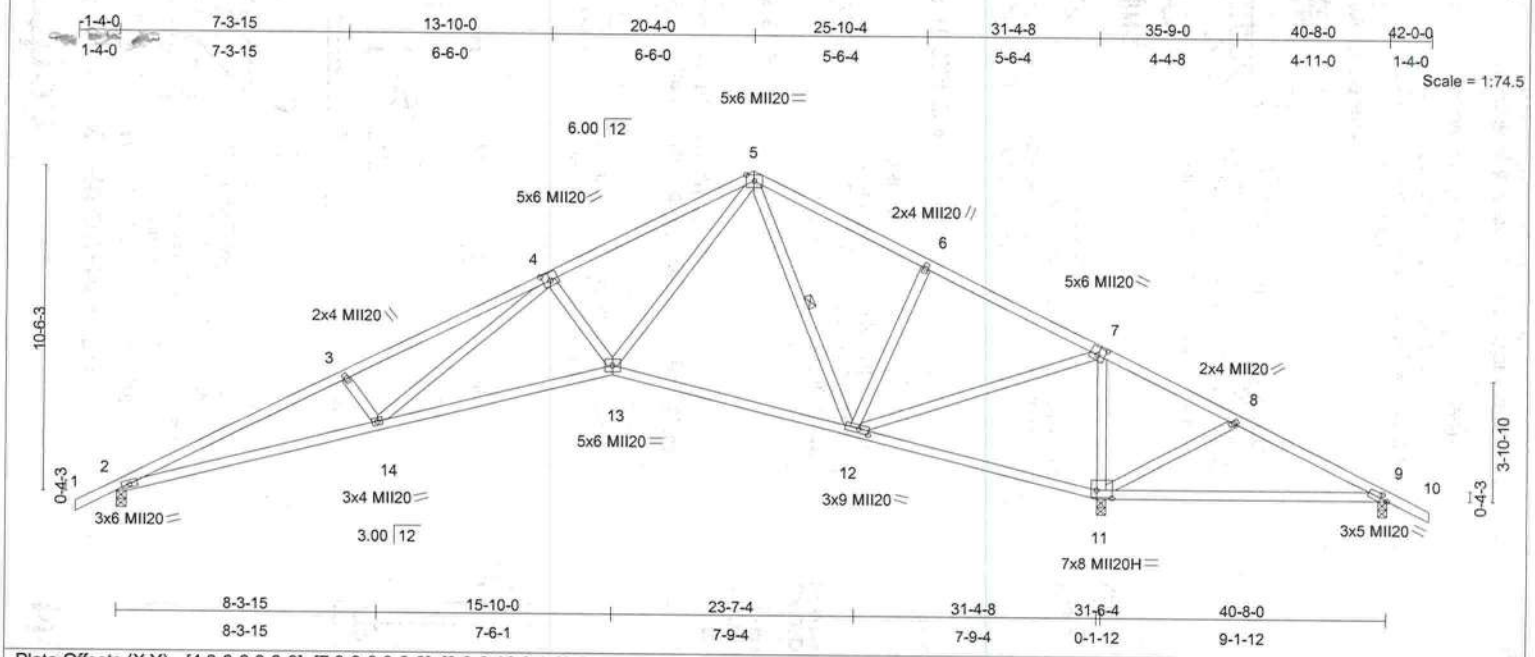

Plate Offsets (X,Y): [4:0-3-0,0-3-0], [7:0-3-0,0-3-0], [9:0-2-10,0-1-8], [11:0-6-0,0-3-0], [12:0-4-0,0-1-8]

LOADING (psf)		SPACING	2-0-0	CSI		DEFL	in	(loc)	l/defl	L/d	PLATES	GRIP
TCLL	20.0	Plates Increase	1.25	TC	0.58	Vert(LL)	0.27	14	>999	360	MII20	249/190
TCDL	10.0	Lumber Increase	1.25	BC	0.74	Vert(TL)	-0.55	2-14	>686	240	MII20H	187/143
BCLL	0.0	Rep Stress Incr	YES	WB	0.87	Horz(TL)	0.27	11	n/a	n/a		
BCDL	10.0	Code FBC2004/TPI2002		(Matrix)							Weight: 211 lb	

LUMBER
TOP CHORD 2 X 4 SYP No.2
BOT CHORD 2 X 4 SYP No.2
WEBS 2 X 4 SYP No.3

BRACING
TOP CHORD Structural wood sheathing directly applied or 2-11-15 oc purlins.
BOT CHORD Rigid ceiling directly applied or 4-4-10 oc bracing.
WEBS 1 Row at midpt 5-12

REACTIONS (lb/size) 2=1076/0-3-8, 11=2771/0-3-8, 9=-440/0-3-8
Max Horz 2=-203(load case 5)
Max Uplift2=-500(load case 4), 11=-965(load case 4), 9=-578(load case 8)
Max Grav 2=1076(load case 1), 11=2771(load case 1), 9=228(load case 4)

FORCES (lb) - Maximum Compression/Maximum Tension
TOP CHORD 1-2=0/33, 2-3=-3114/1268, 3-4=-2880/1258, 4-5=-1626/683, 5-6=-319/340, 6-7=-450/299, 7-8=-711/1954, 8-9=-623/1621, 9-10=0/35
BOT CHORD 2-14=-1210/2788, 13-14=-584/1802, 12-13=0/531, 11-12=-1797/826, 9-11=-1365/611
WEBS 3-14=-337/351, 4-14=-556/1036, 4-13=-644/510, 5-13=-577/1512, 5-12=-889/350, 6-12=-312/302, 7-12=-708/2126, 7-11=-1976/761, 8-11=-374/278

NOTES
1) Unbalanced roof live loads have been considered for this design.
2) Wind: ASCE 7-02; 110mph (3-second gust); h=15ft; TCDL=5.0psf; BCDL=5.0psf; Category II; Exp C; enclosed; MWFRS gable end zone; cantilever left and right exposed ; end vertical left and right exposed; Lumber DOL=1.33 plate grip DOL=1.33.
3) All plates are MT20 plates unless otherwise indicated.
4) This truss requires plate inspection per the Tooth Count Method when this truss is chosen for quality assurance inspection.
5) Bearing at joint(s) 2 considers parallel to grain value using ANSI/TPI 1 angle to grain formula. Building designer should verify capacity of bearing surface.
6) Provide mechanical connection (by others) of truss to bearing plate capable of withstanding 500 lb uplift at joint 2, 965 lb uplift at joint 11 and 578 lb uplift at joint 9.

LOAD CASE(S) Standard

Scott W. Miller, FL Lic #58316
MiTek Industries, Inc.
14515 North Outer Forty Drive
Suite 300
Chesterfield, MO, 63017
FL Cert.#6634

March 23,2006

WARNING - Verify design parameters and READ NOTES ON THIS AND INCLUDED MITEK REFERENCE PAGE MII-7473 BEFORE USE.
Design valid for use only with MiTek connectors. This design is based only upon parameters shown, and is for an individual building component. Applicability of design paramenters and proper incorporation of component is responsibility of building designer - not truss designer. Bracing shown is for lateral support of individual web members only. Additional temporary bracing to insure stability during construction is the responsibility of the erector. Additional permanent bracing of the overall structure is the responsibility of the building designer. For general guidance regarding fabrication, quality control, storage, delivery, erection and bracing, consult **ANSI/TPI1 Quality Criteria, DSB-89 and BCSI1 Building Component Safety Information** available from Truss Plate Institute, 583 D'Onofrio Drive, Madison, WI 53719.

14515 N. Outer Forty,
Suite #300
Chesterfield, MO 63017

MiTek®

Symbols

PLATE LOCATION AND ORIENTATION

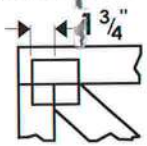

*Center plate on joint unless x, y offsets are indicated. Dimensions are in ft-in-sixteenths. Apply plates to both sides of truss and securely seat.

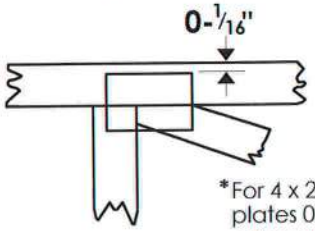

*For 4 x 2 orientation, locate plates 0-1/16" from outside edge of truss.

*This symbol indicates the required direction of slots in connector plates.

***Plate location details available in MiTek 20/20 software or upon request.**

PLATE SIZE

4 x 4 — The first dimension is the width perpendicular to slots. Second dimension is the length parallel to slots.

LATERAL BRACING

Indicated by symbol shown and/or by text in the bracing section of the output. Use T, I or Eliminator bracing if indicated.

BEARING

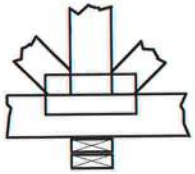

Indicates location where bearings (supports) occur. Icons vary but reaction section indicates joint number where bearings occur.

Industry Standards:

ANSI/TPI1: National Design Specification for Metal Plate Connected Wood Truss Construction.
DSB-89: Design Standard for Bracing.
BCSI1: Building Component Safety Information, Guide to Good Practice for Handling, Installing & Bracing of Metal Plate Connected Wood Trusses

Numbering System

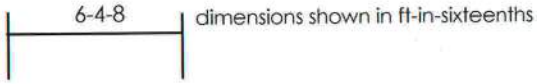

dimensions shown in ft-in-sixteenths

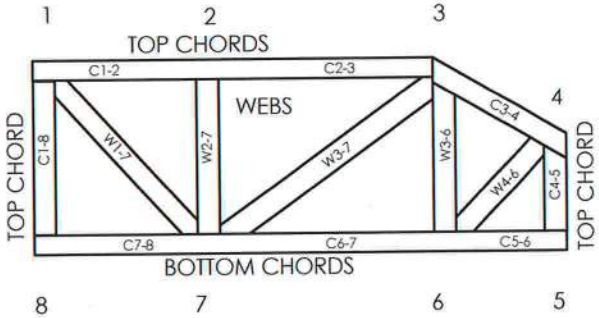

JOINTS ARE GENERALLY NUMBERED/LETTERED CLOCKWISE AROUND THE TRUSS STARTING AT THE JOINT FARTHEST TO THE LEFT.

CHORDS AND WEBS ARE IDENTIFIED BY END JOINT NUMBERS/LETTERS.

CONNECTOR PLATE CODE APPROVALS

BOCA	96-31, 95-43, 96-20-1, 96-67, 84-32
ICBO	4922, 5243, 5363, 3907
SBCCI	9667, 9730, 9604B, 9511, 9432A

MiTek®

TEE-LOK®

MiTek Engineering Reference Sheet: MII-7473

General Safety Notes

Failure to Follow Could Cause Property Damage or Personal Injury

1. Additional stability bracing for truss system, e.g. diagonal or X-bracing, is always required. See BCSI1.
2. Never exceed the design loading shown and never stack materials on inadequately braced trusses.
3. Provide copies of this truss design to the building designer, erection supervisor, property owner and all other interested parties.
4. Cut members to bear tightly against each other.
5. Place plates on each face of truss at each joint and embed fully. Knots and wane at joint locations are regulated by ANSI/TPI1.
6. Design assumes trusses will be suitably protected from the environment in accord with ANSI/TPI1.
7. Unless otherwise noted, moisture content of lumber shall not exceed 19% at time of fabrication.
8. Unless expressly noted, this design is not applicable for use with fire retardant or preservative treated lumber.
9. Camber is a non-structural consideration and is the responsibility of truss fabricator. General practice is to camber for dead load deflection.
10. Plate type, size, orientation and location dimensions shown indicate minimum plating requirements.
11. Lumber used shall be of the species and size, and in all respects, equal to or better than that specified.
12. Top chords must be sheathed or purlins provided at spacing shown on design.
13. Bottom chords require lateral bracing at 10 ft. spacing, or less, if no ceiling is installed, unless otherwise noted.
14. Connections not shown are the responsibility of others.
15. Do not cut or alter truss member or plate without prior approval of a professional engineer.
16. Install and load vertically unless indicated otherwise.

© 2004 MiTek®

CERTIFICATE OF OCCUPANCY

COLUMBIA COUNTY, FLORIDA

Department of Building and Zoning Inspection

This Certificate of Occupancy is issued to the below named permit holder for the building and premises at the below named location, and certifies that the work has been completed in accordance with the Columbia County Building Code.

Parcel Number 03-4S-17-07570-923

Building permit No. 000023952

Use Classification SFD,UTILITY

Fire: 23.68

Permit Holder AARON SIMQUE

Waste: 49.00

Owner of Building AARON SIMQUE

Total: 72.68

Location: 231 SE CAROB GLEN, LAKE CITY, FL

Date: 06/02/2006

Tony Dicks by

Building Inspector

POST IN A CONSPICUOUS PLACE
(Business Places Only)