DATE 08/03/2009

Columbia County Building Permit

This Permit Must Be Prominently Posted on Premises During Construction

PERMIT
000027985

APPLICANT JERRY M. HUDSON PHONE 386.365.7987

ADDRESS 308 SW UNICORN CT. FT. WHITE FL 32038

OWNER JERRY & DEBORAH HUDSON PHONE 386.365.7987

ADDRESS 1178 SW ENGLISH STREET LAKE CITY FL 32025

CONTRACTOR JERRY & DEBORAH HUDSON PHONE 386.365.7987

LOCATION OF PROPERTY 441-S TO ENGLISH RD,TR AND IT'S APPROX. 1 MILE TO THE SITE ON L.

TYPE DEVELOPMENT SFD/UTILITY ESTIMATED COST OF CONSTRUCTION 112200.00

HEATED FLOOR AREA 2244.00 TOTAL AREA 2244.00 HEIGHT 22.50 STORIES 1

FOUNDATION CONC WALLS FRAMED ROOF PITCH 6'12 FLOOR CONC

LAND USE & ZONING A-3 MAX. HEIGHT 35

Minimum Set Back Requirments: STREET-FRONT 30.00 REAR 25.00 SIDE 25.00

NO. EX.D.U. 0 FLOOD ZONE X DEVELOPMENT PERMIT NO.

PARCEL ID 16-5S-17-09270-000 SUBDIVISION

LOT BLOCK PHASE UNIT TOTAL ACRES 14.00

Culvert Permit No.	Culvert Waiver	Contractor's License Number	Applicant/Owner/Contractor	
EXISTING	09-0286	BLK	WR	N
Driveway Connection	Septic Tank Number	LU & Zoning checked by	Approved for Issuance	New Resident

COMMENTS: 1 FOOT ABOVE ROAD.

Check # or Cash 548

FOR BUILDING & ZONING DEPARTMENT ONLY

Temporary Power date/app. by Foundation date/app. by Monolithic (footer/Slab) date/app. by

Under slab rough-in plumbing date/app. by Slab date/app. by Sheathing/Nailing date/app. by

Framing date/app. by Insulation date/app. by

Rough-in plumbing above slab and below wood floor date/app. by Electrical rough-in date/app. by

Heat & Air Duct date/app. by Peri. beam (Lintel) date/app. by Pool date/app. by

Permanent power date/app. by C.O. Final date/app. by Culvert date/app. by

Pump pole date/app. by Utility Pole date/app. by M/H tie downs, blocking, electricity and plumbing date/app. by

Reconnection date/app. by RV date/app. by Re-roof date/app. by

BUILDING PERMIT FEE $ 565.00 CERTIFICATION FEE $ 11.22 SURCHARGE FEE $ 11.22

MISC. FEES $ 0.00 ZONING CERT. FEE $ 50.00 FIRE FEE $ 0.00 WASTE FEE $

FLOOD DEVELOPMENT FEE $ FLOOD ZONE FEE $ 25.00 CULVERT FEE $ **TOTAL FEE** 662.44

INSPECTORS OFFICE CLERKS OFFICE CH

NOTICE: IN ADDITION TO THE REQUIREMENTS OF THIS PERMIT, THERE MAY BE ADDITIONAL RESTRICTIONS APPLICABLE TO THIS PROPERTY THAT MAY BE FOUND IN THE PUBLIC RECORDS OF THIS COUNTY. AND THERE MAY BE ADDITIONAL PERMITS REQUIRED FROM OTHER GOVERNMENTAL ENTITIES SUCH AS WATER MANAGEMENT DISTRICTS, STATE AGENCIES, OR FEDERAL AGENCIES.

"WARNING TO OWNER: YOUR FAILURE TO RECORD A NOTICE OF COMMENCEMENT MAY RESULT IN YOUR PAYING TWICE FOR IMPROVEMENTS TO YOUR PROPERTY. IF YOU INTEND TO OBTAIN FINANCING, CONSULT WITH YOUR LENDER OR AN ATTORNEY BEFORE RECORDING YOUR NOTICE OF COMMENCEMENT."

EVERY PERMIT ISSUED SHALL BECOME INVALID UNLESS THE WORK AUTHORIZED BY SUCH PERMIT IS COMMENCED WITHIN 180 DAYS AFTER ITS ISSUANCE, OR IF THE WORK AUTHORIZED BY SUCH PERMIT IS SUSPENDED OR ABANDONED FOR A PERIOD OF 180 DAYS AFTER THE TIME THE WORK IS COMMENCED. A VALID PERMIT RECIEVES AN APPROVED INSPECTION EVERY 180 DAYS. WORK SHALL BE CONSIDERED NOT SUSPENDED, ABANDONED OR INVALID WHEN THE PERMIT HAS RECIEVED AN APPROVED INSPECTION WITHIN 180 DAYS OT THE PREVIOUS INSPECTION.

The Issuance of this Permit Does Not Waive Compliance by Permittee with Deed Restrictions.

Columbia County Building Permit Application

For Office Use Only Application # 0907-42 Date Received 7/27/09 By G Permit # 27985

Zoning Official BLK Date 30.07.09 Flood Zone X Land Use A-3 Zoning A-3

FEMA Map # N/A Elevation N/A MFE 1 ft above rd River N/A Plans Examiner (WD) Date 7/29/09

Comments

☑ NOC ☑ EH ☑ Deed or PA ☑ Site Plan ☐ State Road Info ☐ Parent Parcel #

☐ Dev Permit # ☐ In Floodway ☐ Letter of Auth. from Contractor ☐ F W Comp. letter

IMPACT FEES: EMS Fire Corr Road/Code

School = TOTAL Suspended

Septic Permit No. Fax

Name Authorized Person Signing Permit JERRY M. HUDSON Phone 386-365-7987

Address 308 SW UNICORN CT FT WHITE 32038

Owners Name JERRY M & DEBORAH A HUDSON Phone 386-365-7987

911 Address 1178 SW ENGLISH ST. LAKE CITY FL 32025

Contractors Name OWNER builder Phone

Address

Fee Simple Owner Name & Address

Bonding Co. Name & Address

Architect/Engineer Name & Address WILLIAM FREEMAN 128 SW NASSAU ST L.CITY 32025

Mortgage Lenders Name & Address AMERICAN ENTERPRISE BANK of FLORIDA 839 S. 5th St MACCLENNY FL 32063

Circle the correct power company – FL Power & Light – Clay Elec. – Suwannee Valley Elec. – Progress Energy

Property ID Number 16-5S-17-09270-000 Estimated Cost of Construction $180,000.00

Subdivision Name Lot ____ Block ____ Unit ____ Phase ____

Driving Directions FROM LAKE CITY, 441/41 SOUTH TO WATERMELON PARK, GO 1 mile S/O CROSS ROAD 240. TURN RT ON ENGLISH ST. TRAVEL Approx 1 mile TO JOB SITE ON L

Number of Existing Dwellings on Property 0

Construction of ~~BRICK on Block~~ SFD Total Acreage 14 Lot Size

Do you need a - Culvert Permit or Culvert Waiver or Have an Existing Drive Total Building Height 22'5"

SITE PLAN ON PLANS

Actual Distance of Structure from Property Lines - Front ~~550~~ 526.6' Side ~~110'~~ Side ~~550'~~ 502.9' Rear ~~288.3~~

Number of Stories 1 Heated Floor Area 2244 Total Floor Area 2244 Roof Pitch 6/12

Application is hereby made to obtain a permit to do work and installations as indicated. I certify that no work or installation has commenced prior to the issuance of a permit and that all work be performed to meet the standards of all laws regulating construction in this jurisdiction.

OK 548

Spoke to Jerry 7/30/09

TIME LIMITATIONS OF APPLICATION : An application for a permit for any proposed work shall be deemed to have been abandoned 180 days after the date of filing, unless such application has been pursued in good faith or a permit has been issued; except that the building official is authorized to grant one or more extensions of time for additional periods not exceeding 90 days each. The extension shall be requested in writing and justifiable cause demonstrated.

TIME LIMITATIONS OF PERMITS: Every permit issued shall become invalid unless the work authorized by such permit is commenced within 180 days after its issuance, or if the work authorized by such permit is suspended or abandoned for a period of 180 days after the time work is commenced. A valid permit receives an approved inspection every 180 days. Work shall be considered not suspended, abandoned or invalid when the permit has received an approved inspection within 180 days of the previous approved inspection.

FLORIDA'S CONSTRUCTION LIEN LAW: Protect Yourself and Your Investment: According to Florida Law, those who work on your property or provide materials, and are not paid-in-full, have a right to enforce their claim for payment against your property. This claim is known as a construction lien. If your contractor fails to pay subcontractors or material suppliers or neglects to make other legally required payments, the people who are owed money may look to your property for payment, even if you have paid your contractor in full.
This means if a lien is filed against your property, it could be sold against your will to pay for labor, materials or other services which your contractor may have failed to pay.

NOTICE OF RESPONSIBILITY TO BUILDING PERMITEE: ***YOU ARE HEREBY NOTIFIED*** as the recipient of a building permit from Columbia County, Florida, you will be held responsible to the County for any damage to sidewalks and/or road curbs and gutters, concrete features and structures, together with damage to drainage facilities, removal of sod, major changes to lot grades that result in ponding of water, or other damage to roadway and other public infrastructure facilities caused by you or your contractor, subcontractors, agents or representatives in the construction and/or improvement of the building and lot for which this permit is issued. No certificate of occupancy will be issued until all corrective work to these public infrastructures and facilities has been corrected.

WARNING TO OWNER: YOUR FAILURE TO RECORD A NOTICE OF COMMENCMENT MAY RESULT IN YOU PAYING TWICE FOR IMPROVEMENTS TO YOUR PROPERTY. A NOTICE OF COMMENCEMENT MUST BE RECORDED AND POSTED ON THE JOB SITE BEFORE THE FIRST INSPECTION. IF YOU INTEND TO OBTAIN FINANCING, CONSULT WITH YOUR LENDER OR ATTORNEY BEFORE RECORDING YOUR NOTICE OF COMMENCEMENT.

OWNERS CERTIFICATION: I hereby certify that all the foregoing information is accurate and all work will be done in compliance with all applicable laws and regulating construction and zoning. I further understand the above written responsibilities in Columbia County for obtaining this Building Permit.

Jerry M Hudson
_____
Owners Signature

CONTRACTORS AFFIDAVIT: By my signature I understand and agree that I have informed and provided this written statement to the owner of all the above written responsibilities in Columbia County for obtaining this Building Permit including all application and permit time limitations.

_____
Contractor's Signature (Permitee)

Contractor's License Number_____
Columbia County
Competency Card Number_____

Affirmed under penalty of perjury to by the Contractor and subscribed before me this ____ day of _____ 20___.
Personally known_____ or Produced Identification_____

_____ **SEAL:**
State of Florida Notary Signature (For the Contractor)

27985

THIS INSTRUMENT PREPARED BY
AND RETURN TO:
Osceola Land Title Inc.
577 S. 6th Street
Macclenny, FL 32063

Parcel I.D. #: ***16-5S-17-09270-002***
Grantee(s) SS#'s:

Inst 200912012618 Date 7/29/2009 Time 10:09 AM
DC P DeWitt Cason,Columbia County Page 1 of 2 B 1177 P 2782

SPACE ABOVE THIS LINE FOR PROCESSING DATA — *SPACE ABOVE THIS LINE FOR RECORDING DATA*

NOTICE OF COMMENCEMENT

STATE OF FLORIDA
COUNTY OF BAKER

THE UNDERSIGNED hereby gives notice that improvement will be made to certain real property, and in accordance with Chapter 713.13, Florida Statutes, the following information is provided in this Notice of Commencement. This Notice shall be void and of no force and effect if construction is not commenced within ninety (90) days after recordation.

1. Description of property: (Legal description of property, and street address if available)

   1178 English St. SW, Lake City, FL 32055
   A parcel of land in Section 16, Township 5 South, Range 17 East, Columbia County, Florida, being more particularly described as follows:
   Commence at the Southwest corner of the SE ¼ of Section 16, Township 5 South, Range 17 East, Columbia County, Florida, and run N 89°50'26" E along the South line of the SW ¼ of the SE ¼ of Section 16 a distance of 8.88 feet to a point on the Easterly Maintained Right-of-Way line of English Road (a county maintained road) and the Point of Beginning; thence N 00°15'33" W along said Easterly Maintained Right-of-Way line of English Road (a county maintained road) a distance of 309.12 feet; thence N 01°09'49" E still along the Easterly Maintained Right-of-Way line of English Road (a county maintained road) a distance of 255.87 feet; thence N 02°54'43" E still along the Easterly Maintained Right-of-Way line of English Road (a county maintained road) a distance of 285.82 feet; thence N 38°36'23" E still along said Easterly Maintained Right-of-Way line of English Road (a county maintained road) a distance of 25.12 feet; thence Easterly and Northeasterly along the Southerly Maintained Right-of-Way line of English Road (a county maintained road) a distance of 650.5 feet, more or less; thence S 00°42'14" W a distance of 921.41 feet to a point on the South line of the SW ¼ of the SE ¼; thence S 89°50'26" W along said South line of the SW ¼ of the SE ¼ a distance of 715.59 feet to the Point of Beginning.

2. General description of improvement: **construction of single family dwelling**

3. Owner information:
   a. Name and address:
      Jerry M. Hudson and Deborah A. Hudson
      308 SW Unicorn Court, Lake City, Florida 32038
   b. Interest in property: **Fee Simple**
   c. Name and Address of Fee Simple Titleholder (if other than owner):

4. Contractor: (Name and Address)
   Foster's General Contrcting, Inc.
   10174 N. Hilliard Ave., Glen St. Mary, Florida 32040
   Telephone Number: _____

5. Surety (if any):
   a. Name and Address:
      Telephone Number: _____
   b. Amount of Bond $_____

6. Lender: (Name and Address)
   American Enterprise Bank of Florida, Inc.
   839 South 5th Street, Macclenny, FL 32063
   Telephone Number: _____

7. Persons within the State of Florida designated by Owner upon whom notice or other documents may be served as provided by Section 713.13(1)(a)7., Florida Statutes: (Name and Address)
   N/A

8. In addition to himself, Owner designates the following person(s) to receive a copy of the Lienor's Notice as provided in Section 713.13(1)(b), Florida Statutes: (Name and Address)
   American Enterprise Bank of Florida, Inc.
   839 South 5th Street, Macclenny, FL 32063
   Telephone Number: _____

9. Expiration date of Notice of Commencement (the expiration date is 1 year from the date of recording unless a different date is specified) _____.

COLUMBIA COUNTY BUILDING DEPARTMENT
135 NE Hernando Ave., Suite B-21
Lake City, FL 32055
Office: 386-758-1008 Fax: 386-758-2160

NOTARIZED DISCLOSURE STATEMENT
FOR OWNER/BUILDER WHEN ACTING AS THER OWN CONTRACTOR AND CLAIMING EXEMPTION OF CONTRACTOR LICENSING REQUIREMENTS IN ACCORDANCE WITH FLORIDA STATUTES, ss. 489.103(7).-

State law requires construction to be done by licensed contractors. You have applied for a permit under an exemption to that law. The exemption allows you, as the owner of your property, to act as your own contractor with certain restrictions even though you do not have a license. You must provide direct, onsite supervision of the construction yourself. You may build or improve a one-family or two-family residence or a farm outbuilding. You may also build or improve a commercial building, provided your costs do not exceed $75,000. The building or residence must be for your own use or occupancy. It may not be built or substantially improved for sale or lease. If you sell or lease a building you have built or substantially improved for yourself within 1 year after the construction is complete, the law will presume that you built or substantially improved it for sale or lease, which is a violation of this exemption. You may not hire an unlicensed person to act as your contractor or to supervise people working on your building. It is your responsibility to make sure that people employed by you have licenses required by state law and by county or municipal licensing ordinances. You may not delegate the responsibility for supervising work to a licensed contractor who is not licensed to perform the work being done. Any person working on your building who is not licensed must work under your direct supervision and must be employed by you, which means that you must deduct F .I.C.A. and withholding tax and provide workers' compensation for that employee, all as prescribed by law. Your construction must comply with all applicable laws, ordinances, building codes, and zoning regulations.

I understand that if I am not physically doing the work or physically supervising free labor from friends or relatives, that I must hire licensed contractors, i.e. electrician, plumber, mechanical (heating & air conditioning), etc. I further understand that the violation of not physically doing the work, and the use of unlicensed contractors at the construction site, will cause the project to be shut down by the inspection staff of the Columbia County Building Department. Additionally, state statutes allows for additional penalties. I also understand that if this violation does occur, that in order for the job to proceed, I will have a licensed contractor come in and obtain a new permit as taking the job over. I understand that if I hire subcontractors under a contract price, that they must be licensed to work in Columbia County, i.e. masonry, drywall, carpentry. Contractors licensed by the Columbia County Contractor Licensing Section or the State of Florida are required to have worker's compensation and liability coverage.

TYPE OF CONSTRUCTION

(✓) Single Family Dwelling
( ) Other_____
( ) Two-Family Residence
( ) Farm Outbuilding
( ) Addition, Alteration, Modification or other Improvement

I Jerry M Hudson, have been advised of the above disclosure statement for exemption from contractor licensing as an owner/builder. I agree to comply with all requirements provided for in Florida Statutes ss.489.103(7) allowing this exception for the construction permitted by Columbia County Building Permit Number _____

Jerry M Hudson 6-4-09
Owner Builder Signature Date

FLORIDA NOTARY

The above signer is personally known to me or produced identification FLDL H325-433-54-271-0
Notary Signature Dee W. Nettles Date 6-4-09

DEE W. NETTLES
MY COMMISSION # DD 693100
EXPIRES: July 23, 2011
Bonded Thru Notary Public Underwriters

FOR BUILDING DEPARTMENT USE ONLY

I hereby certify that the above listed owner/builder has been notified of the disclosure statement in Florida Statutes ss 489.103(7). Date_____ Building Official/Representative_____

COLUMBIA COUNTY 9-1-1 ADDRESSING

P. O. Box 1787, Lake City, FL 32056-1787
PHONE: (386) 758-1125 * FAX: (386) 758-1365 * Email: ron_croft@columbiacountyfla.com

Addressing Maintenance

To maintain the Countywide Addressing Policy you must make application for a 9-1-1 Address at the time you apply for a building permit. The established standards for assigning and posting numbers to all principal buildings, dwellings, businesses and industries are contained in Columbia County Ordinance 2001-9. The addressing system is to enable Emergency Service Agencies to locate you in an emergency, and to assist the United States Postal Service and the public in the timely and efficient provision of services to residents and businesses of Columbia County.

DATE REQUESTED: 2/25/2009 **DATE ISSUED:** 3/4/2009

ENHANCED 9-1-1 ADDRESS:

1178 SW ENGLISH ST

LAKE CITY FL 32025

PROPERTY APPRAISER PARCEL NUMBER:

16-5S-17-09270-002

Remarks:

PARENT PARCEL 16-5S-17-09270-000

Approved Address

MAR 04 2009

911Addressing/GIS Dept

Address Issued By: Ronald M Croft

Columbia County 9-1-1 Addressing / GIS Department

NOTICE: THIS ADDRESS WAS ISSUED BASED ON LOCATION INFORMATION RECEIVED FROM THE REQUESTER. SHOULD, AT A LATER DATE, THE LOCATION INFORMATION BE FOUND TO BE IN ERROR, THIS ADDRESS IS SUBJECT TO CHANGE.

1386

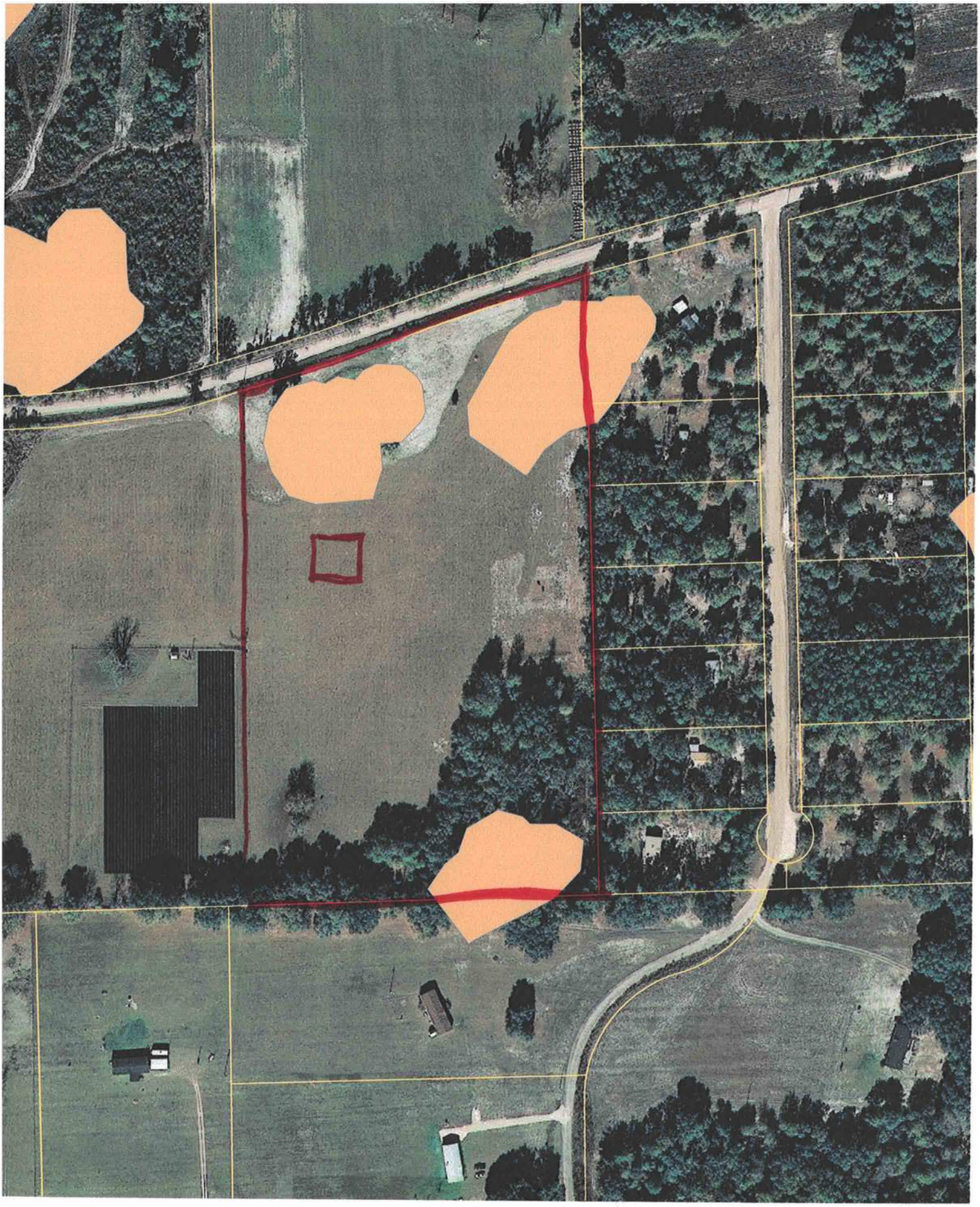

0907-42

FORM 1100A-08

FLORIDA ENERGY EFFICIENCY CODE FOR BUILDING CONSTRUCTION

Florida Department of Community Affairs Residential Performance Method A

Project Name:	Hudson Residence	Builder Name:	Jerry Hudson (owner)
Street:		Permit Office:	County Building Dept
City, State, Zip:	Lake City , Fl ,	Permit Number:	27985
Owner:	Jerry and Deborah Hudson	Jurisdiction:	22,000
Design Location:	FL, Gainesville		

1. New construction or existing	New (From Plans)
2. Single family or multiple family	Single-family
3. Number of units, if multiple family	1
4. Number of Bedrooms	3
5. Is this a worst case?	Yes
6. Conditioned floor area (ft²)	2244

7. Windows	Description	Area
a. U-Factor:	Dbl, U=0.95	215.00 ft²
SHGC:	SHGC=0.80	
b. U-Factor:	N/A	ft²
SHGC:		
c. U-Factor:	N/A	ft²
SHGC:		
d. U-Factor:	N/A	ft²
SHGC:		
e. U-Factor:	N/A	ft²
SHGC:		

8. Floor Types	Insulation	Area
a. Slab-On-Grade Edge Insulation	R=0.0	2244.00 ft²
b. N/A	R=	ft²
c. N/A	R=	ft²

9. Wall Types	Insulation	Area
a. Face Brick - Block, Exterior	R=5.0	1548.00 ft²
b. N/A	R=	ft²
c. N/A	R=	ft²
d. N/A	R=	ft²

10. Ceiling Types	Insulation	Area
a. Under Attic (Vented)	R=30.0	2244.00 ft²
b. N/A	R=	ft²
c. N/A	R=	ft²

11. Ducts
a. Sup: Attic Ret: Attic AH: Interior Sup. R= 6, 448.8 ft²

12. Cooling systems
a. Central Unit — Cap: 36 kBtu/hr, SEER: 13

13. Heating systems
a. Electric Heat Pump — Cap: 36.4 kBtu/hr, HSPF: 7.7

14. Hot water systems
a. Electric — Cap: 50 gallons, EF: 0.95

b. Conservation features
None

15. Credits — Pstat

Glass/Floor Area: 0.096

Total As-Built Modified Loads: 37.15
Total Baseline Loads: 43.70

PASS

I hereby certify that the plans and specifications covered by this calculation are in compliance with the Florida Energy Code.

PREPARED BY: Debbie A Motes
DATE: 3-5-09

I hereby certify that this building, as designed, is in compliance with the Florida Energy Code.

OWNER/AGENT: _____
DATE: _____

Review of the plans and specifications covered by this calculation indicates compliance with the Florida Energy Code. Before construction is completed this building will be inspected for compliance with Section 553.908 Florida Statutes.

BUILDING OFFICIAL: _____
DATE: _____

- **Compliance requires certification by the air handler unit manufacturer that the air handler enclosure qualifies as certified factory-sealed in accordance with N1110.A.3.**

PROJECT

Title:	Hudson Residence	Bedrooms:	3	Adress Type:	Street Address
Building Type:	FLAsBuilt	Bathrooms:	0	Lot #	
Owner:	Jerry and Deborah Hudson	Conditioned Area:	2244	SubDivision:	
# of Units:	1	Total Stories:	1	PlatBook:	
Builder Name:	Jerry Hudson (owner)	Worst Case:	Yes	Street:	
Permit Office:	County Building Dept	Rotate Angle:	315	County:	Columbia
Jurisdiction:		Cross Ventilation:		City, State, Zip:	Lake City , Fl ,
Family Type:	Single-family	Whole House Fan:			
New/Existing:	New (From Plans)				
Comment:					

CLIMATE

√	Design Location	TMY Site	IECC Zone	Design Temp 97.5 %	Design Temp 2.5 %	Int Design Temp Winter	Int Design Temp Summer	Heating Degree Days	Design Moisture	Daily Temp Range
____	FL, Gainesville	FL_GAINESVILLE_REGI	2	32	92	75	70	1305.5	51	Medium

FLOORS

√	#	Floor Type	Perimeter	R-Value	Area	Tile	Wood	Carpet
____	1	Slab-On-Grade Edge Insulatio	209 ft	0	2244 ft²	0.16	0.84	0

ROOF

√	#	Type	Materials	Roof Area	Gable Area	Roof Color	Solar Absor.	Tested	Deck Insul.	Pitch
____	1	Hip	Composition shingles	2510 ft²	0 ft²	Medium	0.96	No	0	26.6 deg

ATTIC

√	#	Type	Ventilation	Vent Ratio (1 in)	Area	RBS	IRCC
____	1	Full attic	Vented	300	2244 ft²	N	N

CEILING

√	#	Ceiling Type	R-Value	Area	Framing Frac	Truss Type
____	1	Under Attic (Vented)	30	2244 ft²	0.11	Wood

WALLS

√	#	Ornt	Adjacent To	Wall Type	Cavity R-Value	Area	Sheathing R-Value	Framing Fraction	Solar Absor.
____	1	N	Exterior	Face Brick - Block	5	486 ft²	0	0	0.75
____	2	S	Exterior	Face Brick - Block	5	486 ft²	0	0	0.75
____	3	E	Exterior	Face Brick - Block	5	288 ft²	0	0	0.75
____	4	W	Exterior	Face Brick - Block	5	288 ft²	0	0	0.75

DOORS

√	#	Ornt	Door Type	Storms	U-Value	Area
____	1	N	Insulated	None	0.46	32.5 ft²
____	2	N	Insulated	None	0.46	19.5 ft²
____	3	S	Insulated	None	0.46	32.5 ft²

WINDOWS

Window orientation below is as entered. Actual orientation is modified by rotate angle shown in "Project" section above.

√	#	Ornt	Frame	Panes	NFRC	U-Factor	SHGC	Storms	Area	Overhang Depth	Overhang Separation	Int Shade	Screening
____	1	N	Vinyl	Low-E Double	Yes	0.95	0.8	N	45 ft²	12 ft 0 in	1 ft 5 in	HERS 2006	None
____	2	N	Vinyl	Low-E Double	Yes	0.95	0.8	N	30 ft²	1 ft 6 in	1 ft 5 in	HERS 2006	None
____	3	S	Vinyl	Low-E Double	Yes	0.95	0.8	N	75 ft²	8 ft 0 in	1 ft 4 in	HERS 2006	None
____	4	S	Vinyl	Low-E Double	Yes	0.95	0.8	N	6 ft²	12 ft 0 in	1 ft 4 in	HERS 2006	None
____	5	E	Vinyl	Low-E Double	Yes	0.95	0.8	N	16 ft²	1 ft 6 in	1 ft 4 in	HERS 2006	None
____	6	E	Vinyl	Low-E Double	Yes	0.95	0.8	N	9 ft²	1 ft 6 in	1 ft 4 in	HERS 2006	None
____	7	W	Vinyl	Low-E Double	Yes	0.95	0.8	N	30 ft²	1 ft 6 in	1 ft 4 in	HERS 2006	None
____	8	W	Vinyl	Low-E Double	Yes	0.95	0.8	N	4 ft²	1 ft 6 in	1 ft 4 in	HERS 2006	None

INFILTRATION & VENTING

√	Method	SLA	CFM 50	ACH 50	ELA	EqLA	---- Forced Ventilation ---- Supply CFM	Exhaust CFM	Run Time Fraction	Fan Watts
____	Default	0.00036	2119	6.30	116.3	218.8	0 cfm	0 cfm	0	0

COOLING SYSTEM

√	#	System Type	Subtype	Efficiency	Capacity	Air Flow	SHR	Ductless
____	1	Central Unit	None	SEER: 13	36 kBtu/hr	1080 cfm	0.75	False

HEATING SYSTEM

√	#	System Type	Subtype	Efficiency	Capacity	Ductless
____	1	Electric Heat Pump	None	HSPF: 7.7	36 kBtu/hr	False

HOT WATER SYSTEM

√	#	System Type	EF	Cap	Use	SetPnt	Conservation
____	1	Electric	0.95	50 gal	60 gal	120 deg	None

SOLAR HOT WATER SYSTEM

√	FSEC Cert #	Company Name	System Model #	Collector Model #	Collector Area	Storage Volume	FEF
____	None	None			ft²		

DUCTS

√	#	---- Supply ---- Location	R-Value	Area	---- Return ---- Location	Area	Leakage Type	Air Handler	CFM 25	Percent Leakage	QN	RLF
_____	1	Attic	6	448.8 ft	Attic	112.2 ft	Default Leakage	Interior				

TEMPERATURES

Programable Thermostat: Y

Ceiling Fans:

Cooling	[X] Jan	[X] Feb	[X] Mar	[X] Apr	[X] May	[X] Jun	[X] Jul	[X] Aug	[X] Sep	[X] Oct	[X] Nov	[X] Dec
Heating	[X] Jan	[X] Feb	[X] Mar	[X] Apr	[X] May	[X] Jun	[X] Jul	[X] Aug	[X] Sep	[X] Oct	[X] Nov	[X] Dec
Venting	[X] Jan	[X] Feb	[X] Mar	[X] Apr	[X] May	[X] Jun	[X] Jul	[X] Aug	[X] Sep	[X] Oct	[X] Nov	[X] Dec

Thermostat Schedule: HERS 2006 Reference

Schedule Type		Hours 1	2	3	4	5	6	7	8	9	10	11	12
Cooling (WD)	AM	78	78	78	78	78	78	78	78	80	80	80	80
	PM	80	80	78	78	78	78	78	78	78	78	78	78
Cooling (WEH)	AM	78	78	78	78	78	78	78	78	78	78	78	78
	PM	78	78	78	78	78	78	78	78	78	78	78	78
Heating (WD)	AM	66	66	66	66	66	68	68	68	68	68	68	68
	PM	68	68	68	68	68	68	68	68	68	68	66	66
Heating (WEH)	AM	66	66	66	66	66	68	68	68	68	68	68	68
	PM	68	68	68	68	68	68	68	68	68	68	66	66

FORM 1100A-08

Code Compliance Cheklist

Residential Whole Building Performance Method A - Details

ADDRESS:	PERMIT #:
Lake City, Fl,	

INFILTRATION REDUCTION COMPLIANCE CHECKLIST

COMPONENTS	SECTION	REQUIREMENTS FOR EACH PRACTICE	CHECK
Exterior Windows & Doors	N1106.AB.1.1	Maximum: .3 cfm/sq.ft. window area; .5 cfm/sq.ft. door area.	
Exterior & Adjacent Walls	N1106.AB.1.2.1	Caulk, gasket, weatherstrip or seal between: windows/doors & frames, surrounding wall; foundation & wall sole or sill plate; joints between exterior wall panels at corners; utility penetrations; between wall panels & top/bottom plates; between walls and floor. EXCEPTION: Frame walls where a continuous infiltration barrier is installed that extends from, and is sealed to, the foundation to the top plate.	
Floors	N1106.AB.1.2.2	Penetrations/openings > 1/8" sealed unless backed by truss or joint members. EXCEPTION: Frame floors where a continuous infiltration barrier is installed that is sealed to the perimeter, penetrations and seams.	
Ceilings	N1106.AB.1.2.3	Between walls & ceilings; penetrations of ceiling plane to top floor; around shafts, chases, soffits, chimneys, cabinets sealed to continuous air barrier; gaps in gyp board & top plate; attic access. EXCEPTION: Frame ceilings where a continuous infiltration barrier is installed that is sealed at the perimeter, at penetrations and seams.	
Recessed Lighting Fixtures	N1106.AB.1.2.4	Type IC rated with no penetrations, sealed; or Type IC or non-IC rated, installed inside a sealed box with 1/2" clearance & 3" from insulation; or Type IC with < 2.0 cfm from conditioned space, tested.	
Multi-story Houses	N1106.AB.1.2.5	Air barrier on perimeter of floor cavity between floors.	
Additional Infiltration reqts	N1106.AB.1.3	Exhaust fans vented to outdoors, dampers; combustion space heaters comply with NFPA, have combustion air.	

OTHER PRESCRIPTIVE MEASURES (must be met or exceeded by all residences.)

COMPONENTS	SECTION	REQUIREMENTS	CHECK
Water Heaters	N1112.AB.3	Comply with efficiency requirements in Table N112.ABC.3. Switch or clearly marked circuit breaker (electric) or cutoff (gas) must be provided. External or built-in heat trap required.	
Swimming Pools & Spas	N1112.AB.2.3	Spas & heated pools must have covers (except solar heated). Non-commercial pools must have a pump timer. Gas spa & pool heaters must have a minimum thermal efficiency of 78%. Heat pump pool heaters shall have a minimum COP of 4.0.	
Shower heads	N1112.AB.2.4	Water flow must be restricted to no more than 2.5 gallons per minute at 80 PSIG.	
Air Distribution Systems	N1110.AB	All ducts, fittings, mechanical equipment and plenum chambers shall be mechanically attached, sealed, insulated and installed in accordance with the criteria of Section N1110.AB. Ducts in unconditioned attics: R-6 min. insulation.	
HVAC Controls	N1107.AB.2	Separate readily accessible manual or automatic thermostat for each system.	
Insulation	N1104.AB.1 N1102.B.1.1	Ceilings-Min. R-19. Common walls-frame R-11 or CBS R-3 both sides. Common ceiling & floors R-11.	

ENERGY PERFORMANCE LEVEL (EPL) DISPLAY CARD

ESTIMATED ENERGY PERFORMANCE INDEX* = 85

The lower the EnergyPerformance Index, the more efficient the home.

1. New construction or existing	New (From Plans)
2. Single family or multiple family	Single-family
3. Number of units, if multiple family	1
4. Number of Bedrooms	3
5. Is this a worst case?	Yes
6. Conditioned floor area (ft²)	2244

7. Windows**	Description	Area
a. U-Factor:	Dbl, U=0.95	215.00 ft²
SHGC:	SHGC=0.80	
b. U-Factor:	N/A	ft²
SHGC:		
c. U-Factor:	N/A	ft²
SHGC:		
d. U-Factor:	N/A	ft²
SHGC:		
e. U-Factor:	N/A	ft²
SHGC:		

8. Floor Types	Insulation	Area
a. Slab-On-Grade Edge Insulation	R=0.0	2244.00 ft²
b. N/A	R=	ft²
c. N/A	R=	ft²

9. Wall Types	Insulation	Area
a. Face Brick - Block, Exterior	R=5.0	1548.00 ft²
b. N/A	R=	ft²
c. N/A	R=	ft²
d. N/A	R=	ft²

10. Ceiling Types	Insulation	Area
a. Under Attic (Vented)	R=30.0	2244.00 ft²
b. N/A	R=	ft²
c. N/A	R=	ft²

11. Ducts
a. Sup: Attic Ret: Attic AH: Interior Sup. R= 6, 448.8 ft²

12. Cooling systems
a. Central Unit — Cap: 36 kBtu/hr, SEER: 13

13. Heating systems
a. Electric Heat Pump — Cap: 36.4 kBtu/hr, HSPF: 7.7

14. Hot water systems
a. Electric — Cap: 50 gallons, EF: 0.95

b. Conservation features
None

15. Credits — Pstat

I certify that this home has complied with the Florida Energy Efficiency Code for Building Construction through the above energy saving features which will be installed (or exceeded) in this home before final inspection. Otherwise, a new EPL Display Card will be completed based on installed Code compliant features.

Builder Signature: _____ Date: _____

Address of New Home: _____ City/FL Zip: _____

*Note: The home's estimated Energy Performance Index is only available through the EnergyGauge USA - FlaRes2008 computer program. This is not a Building Energy Rating. If your Index is below 100, your home may qualify for incentives if you obtain a Florida Energy Gauge Rating. Contact the Energy Gauge Hotline at (321) 638-1492 or see the Energy Gauge web site at energygauge.com for information and a list of certified Raters. For information about Florida's Energy Efficiency Code for Building Construction, contact the Department of Community Affairs at (850) 487-1824.

**Label required by Section 13-104.4.5 of the Florida Building Code, Building, or Section B2.1.1 of Appendix G of the Florida Building Code, Residential, if not DEFAULT.

DEPARTMENT OF HEALTH

APPLICATION FOR ONSITE SEWAGE DISPOSAL SYSTEM CONSTRUCTION PERMIT

Permit Application Number 09-0286

PART II - SITE PLAN

cale: Each block represents 5 feet and 1 inch = 50 feet.

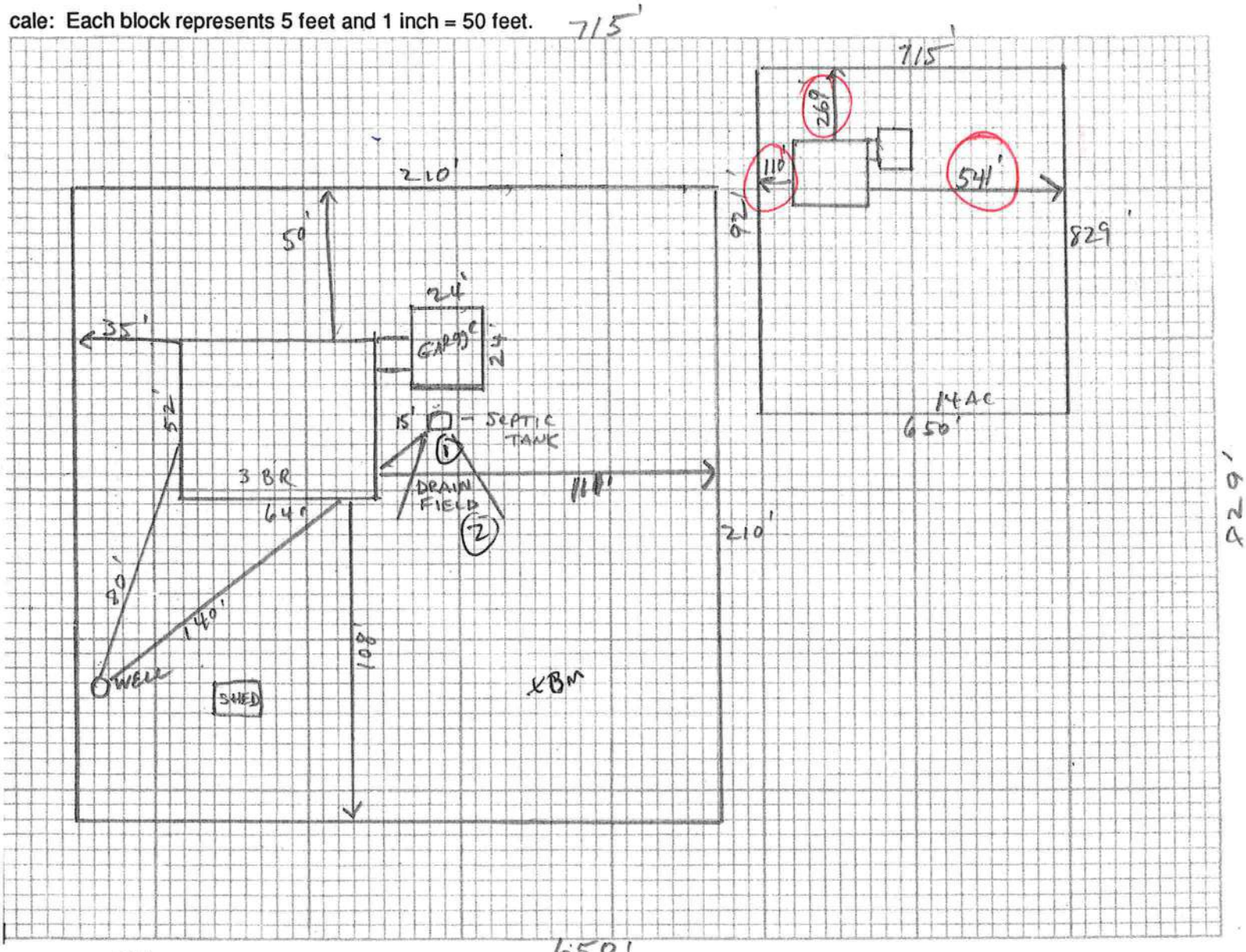

Notes: 14 ACRES

Site Plan submitted by: [signature] Signature — owner Title

Plan Approved ✓ Not Approved _____ Date 5-29-09

By [signature] Columbia County Health Department

ALL CHANGES MUST BE APPROVED BY THE COUNTY HEALTH DEPARTMENT

DH 4015, 10/96 (Replaces HRS-H Form 4015 which may be used)
(Stock Number: 5744-002-4015-6)

COLUMBIA COUNTY BUILDING DEPARTMENT
RESIDENTIAL CHECK LIST REQUIRMENTS

MINIMUM PLAN REQUIREMENTS FOR THE FLORIDA BUILDING CODE RESIDENTIAL 2007 ONE (1) AND TWO (2) FAMILY DWELLINGS

ALL REQUIREMENTS ARE SUBJECT TO CHANGE

ALL BUILDING PLANS MUST INDICATE COMPLIANCE with the Current 2007 FLORIDA BUILDING CODES RESIDENTIAL. ALL PLANS OR DRAWINGS SHALL PROVIDE CALCULATIONS AND DETAILS THAT HAVE THE SEAL AND SIGNATURE OF A CERTIFIED ARCHITECT OR ENGINEER REGISTERED IN THE STATE OF FLORIDA, OR ALTERNATE METHODOLOGIES, APPROVED BY THE STATE OF FLORIDA BUILDING COMMISSION FOR ONE-AND-TWO FAMILY DWELLINGS.

FOR DESIGN PURPOSES THE FOLLOWING BASIC WIND SPEEDS ARE PER FIGURE R301.2(4) of the FLORIDA BUILDING CODES RESIDENTIAL (Florida Wind speed map) **SHALL BE USED.**

WIND SPEED LINE SHALL BE DEFINED AS FOLLOWS: THE CENTERLINE OF INTERSTATE 75.

ALL BUILDINGS CONSTRUCTED EAST OF SAID LINE SHALL BE -------- 100 MPH
ALL BUILDINGS CONSTRUCTED WEST OF SAID LINE SHALL BE --------110 MPH
NO AREA IN COLUMBIA COUNTY IS IN A WIND BORNE DEBRIS REGION

	GENERAL REQUIREMENTS: APPLICANT – PLEASE CHECK ALL APPLICABLE BOXES BEFORE SUBMITTAL			Items to Include- Each Box shall be Circled as Applicable		
				Yes	No	N/A
1	Two (2) complete sets of plans containing the following:			✓		
2	All drawings must be clear, concise, drawn to scale, details that are not used shall be marked void			✓		
3	Condition space (Sq. Ft.)		Total (Sq. Ft.) under roof	IIIIIIII	IIIIIIII	IIIII

Designers name and signature shall be on all documents and a licensed architect or engineer, signature and official embossed seal shall be affixed to the plans and documents as per the FLORIDA BUILDING CODES RESIDENTIAL R101.2.1

Site Plan information including:

4	Dimensions of lot or parcel of land	✓		
5	Dimensions of all building set backs	✓		
6	Location of all other structures (include square footage of structures) on parcel, existing or proposed well and septic tank and all utility easements.	✓		
7	Provide a full legal description of property.	✓		

Wind-load Engineering Summary, calculations and any details required

	GENERAL REQUIREMENTS: APPLICANT – PLEASE CHECK ALL APPLICABLE BOXES BEFORE SUBMITTAL	Items to Include- Each Box shall be Circled as Applicable		
8	Plans or specifications must show compliance with FBCR Chapter 3	IIIIII	IIIII	IIIIII
		YES	NO	N/A
9	Basic wind speed (3-second gust), miles per hour			
10	(Wind exposure – if more than one wind exposure is used, the wind exposure and applicable wind direction shall be indicated)			
11	Wind importance factor and nature of occupancy			
12	The applicable internal pressure coefficient, Components and Cladding			
13	The design wind pressure in terms of psf (kN/m²), to be used for the design of exterior component, cladding materials not specifally designed by the registered design professional.			

Elevations Drawing including:

14	All side views of the structure	✓		
15	Roof pitch	✓		
16	Overhang dimensions and detail with attic ventilation	✓		
17	Location, size and height above roof of chimneys	✓		
18	Location and size of skylights with Florida Product Approval	✓	✓	
18	Number of stories			
20A	Building height from the established grade to the roofs highest peak	✓		

Floor Plan including:

20	Dimensioned area plan showing rooms, attached garage, breeze ways, covered porches, deck, balconies	✓		
21	Raised floor surfaces located more than 30 inches above the floor or grade		✓	
22	All exterior and interior shear walls indicated	✓		
23	Shear wall opening shown (Windows, Doors and Garage doors)	✓		
24	Emergency escape and rescue opening shown in each bedroom (net clear opening shown)	✓		
25	Safety glazing of glass where needed		✓	
26	Fireplaces types (gas appliance) (vented or non-vented) or wood burning with Hearth (see chapter 10 of FBCR)	✓		
27	Stairs with dimensions (width, tread and riser and total run) details of guardrails, Handrails (see FBCR SECTION 311)		✓	
28	Identify accessibility of bathroom (see FBCR SECTION 322)			

All materials placed within opening or onto/into exterior walls, soffits or roofs shall have Florida product approval number and mfg. installation information submitted with the plan (see Florida product approval form)

GENERAL REQUIREMENTS: APPLICANT – PLEASE CHECK ALL APPLICABLE BOXES BEFORE SUBMITTAL	Items to Include- Each Box shall be Circled as Applicable

FBCR 403: Foundation Plans

		YES	NO	N/A
29	Location of all load-bearing walls footings indicated as standard, monolithic, dimensions, size and type of reinforcing.	✓		
30	All posts and/or column footing including size and reinforcing	✓		
31	Any special support required by soil analysis such as piling.		✓	
32	Assumed load-bearing valve of soil_____ Pound Per Square Foot		✓	
33	Location of horizontal and vertical steel, for foundation or walls (include # size and type)	✓		

FBCR 506: CONCRETE SLAB ON GRADE

34	Show Vapor retarder (6mil. Polyethylene with joints lapped 6 inches and sealed)	✓		
35	Show control joints, synthetic fiber reinforcement or welded fire fabric reinforcement and Supports	✓		

FBCR 320: PROTECTION AGAINST TERMITES

36	Indicate on the foundation plan if soil treatment is used for subterranean termite prevention or submit other approved termite protection methods. **Protection shall be provided by registered termiticides**	✓		

FBCR 606: Masonry Walls and Stem walls (load bearing & shear Walls)

37	Show all materials making up walls, wall height, and Block size, mortar type	✓		
38	Show all Lintel sizes, type, spans and tie-beam sizes and spacing of reinforcement	✓		

Metal frame shear wall and roof systems shall be designed, signed and sealed by Florida Prof. Engineer or Architect

Floor Framing System: First and/or second story

39	Floor truss package shall including layout and details, signed and sealed by Florida Registered Professional Engineer		✓	
40	Show conventional floor joist type, size, span, spacing and attachment to load bearing walls, stem walls and/or priers		✓	
41	Girder type, size and spacing to load bearing walls, stem wall and/or priers	✓		
42	Attachment of joist to girder	✓		
43	Wind load requirements where applicable	✓		
44	Show required under-floor crawl space		✓	
45	Show required amount of ventilation opening for under-floor spaces		✓	
46	Show required covering of ventilation opening		✓	
47	Show the required access opening to access to under-floor spaces		✓	
	Show the sub-floor structural panel sheathing type, thickness and fastener schedule on the edges &		✓	

48	intermediate of the areas structural panel sheathing		✓	
49	Show Draftstopping, Fire caulking and Fire blocking	✓		
50	Show fireproofing requirements for garages attached to living spaces, per FBCR section 309	✓		
51	Provide live and dead load rating of floor framing systems (psf).		✓	

FBCR CHAPTER 6 WOOD WALL FRAMING CONSTRUCTION

	GENERAL REQUIREMENTS: APPLICANT – PLEASE CHECK ALL APPLICABLE BOXES BEFORE SUBMITTAL	Items to Include- Each Box shall be Circled as Applicable		
		YES	NO	N/A
52	Stud type, grade, size, wall height and oc spacing for all load bearing or shear walls	✓		
53	Fastener schedule for structural members per table FBCR 602.3 are to be shown	✓		
54	Show Wood structural panel's sheathing attachment to studs, joist, trusses, rafters and structural members, showing fastener schedule attachment on the edges & intermediate of the areas structural panel sheathing	✓		
55	Show all required connectors with a max uplift rating and required number of connectors and oc spacing for continuous connection of structural walls to foundation and roof trusses or rafter systems	✓		
56	Show sizes, type, span lengths and required number of support jack studs, king studs for shear wall opening and girder or header per FBCR Table 502.5 (1)	✓		
57	Indicate where pressure treated wood will be placed	✓		
58	Show all wall structural panel sheathing, grade, thickness and show fastener schedule for structural panel sheathing edges & intermediate areas			
59	A detail showing gable truss bracing, wall balloon framing details or/ and wall hinge bracing detail		✓	

FBCR :ROOF SYSTEMS:

60	Truss design drawing shall meet section FBCR 802.10 Wood trusses	✓		
61	Include a layout and truss details, signed and sealed by Florida Professional Engineer	✓		
62	Show types of connector's assemblies' and resistance uplift rating for all trusses and rafters	✓		
63	Show gable ends with rake beams showing reinforcement or gable truss and wall bracing details		✓	
64	Provide dead load rating of trusses	✓		

FBCR 802:Conventional Roof Framing Layout

65	Rafter and ridge beams sizes, span, species and spacing		✓	
66	Connectors to wall assemblies' include assemblies' resistance to uplift rating		✓	
67	Valley framing and support details		✓	
68	Provide dead load rating of rafter system		✓	

FBCR Table 602,3(2) & FBCR 803 ROOF SHEATHING

69	Include all materials which will make up the roof decking, identification of structural panel sheathing, grade, thickness	✓		
70	Show fastener Size and schedule for structural panel sheathing on the edges & intermediate areas	✓		

FBCR ROOF ASSEMBLIES FRC Chapter 9

71	Include all materials which will make up the roof assembles covering	✓		
72	Submit Florida Product Approval numbers for each component of the roof assembles covering	✓		

FBCR Chapter 11 Energy Efficiency Code for residential building

Residential construction shall comply with this code by using the following compliance methods in the FBCR chapter11 Residential buildings compliance methods. *Two of the required forms are to be submitted, showing dimensions condition area equal to the total condition living space area*

	GENERAL REQUIREMENTS: APPLICANT – PLEASE CHECK ALL APPLICABLE BOXES BEFORE SUBMITTAL	Items to Include- Each Box shall be Circled as Applicable		
		YES	NO	N/A
73	Show the insulation R value for the following areas of the structure	✓		
74	Attic space	✓		
75	Exterior wall cavity	✓		
76	Crawl space		✓	

HVAC information

77	Submit two copies of a Manual J sizing equipment or equivalent computation study	✓		
78	Exhaust fans locations in bathrooms	✓		
79	Show clothes dryer route and total run of exhaust duct	✓		

Plumbing Fixture layout shown

80	All fixtures waste water lines shall be shown on the foundation plan	✓		
81	Show the location of water heater	✓		

Private Potable Water

82	Pump motor horse power	✓		
83	Reservoir pressure tank gallon capacity	✓		
84	Rating of cycle stop valve if used		✓	

Electrical layout shown including

85	Switches, outlets/receptacles, lighting and all required GFCI outlets identified	✓		
86	Ceiling fans	✓		
87	Smoke detectors & Carbon dioxide detectors	✓		
88	Service panel, sub-panel, location(s) and total ampere ratings	✓		
89	On the electrical plans identify the electrical service overcurrent protection device for the main electrical service. This device shall be installed on the exterior of structures to serve as a disconnecting means for the utility company electrical service. Conductors used from the exterior disconnecting means to a panel or sub panel shall have four-wire conductors, of which one conductor shall be used as an equipment ground. Indicate if the utility company service entrance cable will be of the overhead or underground type.	✓		

90	Appliances and HVAC equipment and disconnects	✓		
91	Arc Fault Circuits (AFCI) in bedrooms	✓		

Disclosure Statement for Owner Builders *If you as the applicant will be acting as an owner/builder under section 489.103(7) of the Florida Statutes, submit the required owner builder disclosure statement form.*

Notice Of Commencement

A notice of commencement form **recorded** in the Columbia County Clerk Office is required to be filed with the building department Before Any Inspections can be preformed.

GENERAL REQUIREMENTS: APPLICANT – PLEASE CHECK ALL APPLICABLE BOXES BEFORE SUBMITTAL	Items to Include- Each Box shall be Circled as Applicable

THE FOLLOWING ITEMS MUST BE SUBMITTED WITH BUILDING PLANS

		YES	NO	N/A
92	**Building Permit Application** A current Building Permit Application form is to be completed and submitted for all residential projects	✓		
93	**Parcel Number** The parcel number (Tax ID number) from the Property Appraiser (386) 758-1084 is required. A copy of property deed is also requested	✓		
94	**Environmental Health Permit or Sewer Tap Approval** A copy of a approved Columbia County Environmental Health (386) 758-1058	✓		
95	**City of Lake City** A permit showing an approved waste water sewer tap		✓	
96	**Toilet facilities shall be provided for all construction sites**	✓		
97	**Town of Fort White** (386) 497-2321 If the parcel in the application for building permit is within the Corporate city limits of Fort White an approval land use development letter issued by the Town of Fort is required to be submitted with the application for a building permit.			
98	**Flood Information:** All projects within the Floodway of the Suwannee or Santa Fe Rivers shall require permitting through the Suwannee River Water Management District, before submitting a application to this office. Any project located within a flood zone where the base flood elevation (100 year flood) has been established shall meet the requirements of Section 8.5.2 of the Columbia County Land Development Regulations. Any project located within a flood zone where the base flood elevation has not been established (Zone A) shall meet the requirements of Section 8.5.3 of the Columbia County Land Development Regulations	✓		
99	CERTIFIED FINISHED FLOOR ELEVATIONS will be required on any project where the base flood elevation (100 year flood) has been established		✓	
100	A development permit will also be required. Development permit cost is **$50.00**		✓	
101	**Driveway Connection:** If the property does not have an existing access to a public road, then an application for a culvert permit (**$25.00**) must be made. If the applicant feels that a culvert is not needed, they may apply for a culvert waiver (**$50.00**). All culvert waivers are sent to the Columbia County Public Works Department for approval or denial.		✓	
102	**911 Address:** If the project is located in an area where a 911 address has not been issued, then application for a 911address must be applied for and **received** through the Columbia County Emergency Management Office of 911 Addressing Department (386) 758-1125	✓		

Section R101.2.1 of the Florida Building Code Residential:

The provisions of Chapter 1, Florida Building Code, Building shall govern the administration and enforcement of the Florida Building Code, Residential.

Section 105 of the Florida Building Code defines the:

Time limitation of application.

An application for a permit for any proposed work shall be deemed to have been abandoned 180 days after the date of filing, unless such application has been pursued in good faith or a permit has been issued; except that the building official is authorized to grant one or more extensions of time for additional periods not exceeding 90 days each. The extension shall be requested in writing and justifiable cause demonstrated.

Single-family residential dwelling.

Section 105.3.4 A building permit for a single-family residential dwelling must be issued within 30 working days of application therefor unless unusual circumstances require a longer time for processing the applicati or unless the permit application fails to satisfy the Florida Building Code or the enforcing agency's laws or ordinances.

Permit intent.

Section 105.4.1: A permit issued shall be constructed to be a license to proceed with the work and not as authority to violate, cancel, alter or set aside any of the provisions of the technical codes, nor shall issuance a permit prevent the building official from thereafter requiring a correction of errors in plans, construction or violations of this code. Every permit issued shall become invalid unless the work authorized by such permit is commenced within six months after its issuance, or if the work authorized by such permit is suspended or abandoned for a period of six months after the time the work is commenced.

If work has commenced.

Section 105.4.1.1: If work has commenced and the permit is revoked, becomes null and void, or expires because of lack of progress or abandonment, a new permit covering the proposed construction shall be obtained before proceeding with the work.

New Permit.

Section 105.4.1.2: If a new permit is not obtained within 180 days from the date the initial permit became nu and void, the building official is authorized to require that any work which has been commenced or completed be removed from the building site. Alternately, a new permit may be issued on application, providing the work in place and required to complete the structure meets all applicable regulations in effect at the time the initial permit became null and void and any regulations which may have become effective between the date of expiration and the date if issuance of the new permit.

Work Shall Be:

Section 105.4.1.3: Work shall be considered to be in active progress when the permit has received an approved inspection within 180 days. This provision shall not be applicable in case of civil commotion or strike or when the building work is halted due directly to judicial injunction, order or similar process.

The Fee:

Section 105.4.1.4: The fee for renewal reissuance and extension of a permit shall be set forth by the administrative authority.

When the submitted application is approved for permitting the applican will be notified by phone as to the date and time a building permit will b prepared and issued by the Columbia County Building & Zoning Department

PRODUCT APPROVAL SPECIFICATION SHEET

Location:_____ **Project Name:**_____

As required by Florida Statute 553.842 and Florida Administrative Code 9B-72, please provide the information and the product approval number(s) on the building components listed below if they will be utilized on the construction project for which you are **applying for a building permit on or after April 1, 2004**. We recommend you contact your local product supplier should you not know the product approval number for any of the applicable listed products. More information about statewide product approval can be obtained at www.floridabuilding.org

Category/Subcategory	Manufacturer	Product Description	Approval Number(s)
A. EXTERIOR DOORS			
1. Swinging			
2. Sliding			
3. Sectional			
4. Roll up			
5. Automatic			
6. Other			
B. WINDOWS			
1. Single hung			
2. Horizontal Slider			
3. Casement			
4. Double Hung			
5. Fixed			
6. Awning			
7. Pass -through			
8. Projected			
9. Mullion			
10. Wind Breaker			
11 Dual Action			
12. Other			
C. PANEL WALL			
1. Siding			
2. Soffits			
3. EIFS			
4. Storefronts			
5. Curtain walls			
6. Wall louver			
7. Glass block			
8. Membrane			
9. Greenhouse			
10. Other			
D. ROOFING PRODUCTS			
1. Asphalt Shingles			
2. Underlayments			
3. Roofing Fasteners			
4. Non-structural Metal Rf			
5. Built-Up Roofing			
6. Modified Bitumen			
7. Single Ply Roofing Sys			
8. Roofing Tiles			
9. Roofing Insulation			
10. Waterproofing			
11. Wood shingles /shakes			
12. Roofing Slate			

Category/Subcategory (cont.)	Manufacturer	Product Description	Approval Number(s
13. Liquid Applied Roof Sys			
14. Cements-Adhesives – Coatings			
15. Roof Tile Adhesive			
16. Spray Applied Polyurethane Roof			
17. Other			
E. SHUTTERS			
1. Accordion			
2. Bahama			
3. Storm Panels			
4. Colonial			
5. Roll-up			
6. Equipment			
7. Others			
F. SKYLIGHTS			
1. Skylight			
2. Other			
G. STRUCTURAL COMPONENTS			
1. Wood connector/anchor			
2. Truss plates			
3. Engineered lumber			
4. Railing			
5. Coolers-freezers			
6. Concrete Admixtures			
7. Material			
8. Insulation Forms			
9. Plastics			
10. Deck-Roof			
11. Wall			
12. Sheds			
13. Other			
H. NEW EXTERIOR ENVELOPE PRODUCTS			
1.			
2.			

The products listed below did not demonstrate product approval at plan review. I understand that at the time of inspection of these products, the following information must be available to the inspector on the jobsite; 1) copy of the product approval, 2) the performance characteristics which the product was tested and certified to comply with, 3) copy of the applicable manufacturers installation requirements.

I understand these products may have to be removed if approval cannot be demonstrated during inspecti

Contractor or Contractor's Authorized Agent Signature

Print Name

Date

Permit # (FOR STAFF USE ONLY)

PRODUCT APPROVAL SPECIFICATION SHEET

Location: 1178 SW English St. **Project Name:** Jerry/Debbie Hudson

As required by Florida Statute 553.842 and Florida Administrative Code 9B-72, please provide the information and the product approval number(s) on the building components listed below if they will be utilized on the construction project for which you are **applying for a building permit on or after April 1, 2004**. We recommend you contact your local product supplier should you not know the product approval number for any of the applicable listed products. More information about statewide product approval can be obtained at www.floridabuilding.org

Category/Subcategory	Manufacturer	Product Description	Approval Number(s)
A. EXTERIOR DOORS		Masonite	FL 4242-1
1. Swinging			
2. Sliding			
3. Sectional			
4. Roll up			
5. Automatic			
6. Other			
B. WINDOWS			
1. Single hung		Better Bilt	FL 6029.7
2. Horizontal Slider			
3. Casement			
4. Double Hung			
5. Fixed			
6. Awning			
7. Pass -through			
8. Projected			
9. Mullion			
10. Wind Breaker			
11 Dual Action			
12. Other			
C. PANEL WALL			
1. Siding			
2. Soffits			
3. EIFS			
4. Storefronts			
5. Curtain walls			
6. Wall louver			
7. Glass block			
8. Membrane			
9. Greenhouse			
10. Other			
D. ROOFING PRODUCTS			
1. Asphalt Shingles	ELK	shingles	728.4
2. Underlayments			
3. Roofing Fasteners			
4. Non-structural Metal Rf			
5. Built-Up Roofing			
6. Modified Bitumen			
7. Single Ply Roofing Sys			
8. Roofing Tiles			
9. Roofing Insulation			
10. Waterproofing			
11. Wood shingles /shakes			
12. Roofing Slate			

Category/Subcategory (cont.)	Manufacturer	Product Description	Approval Number(s)
13. Liquid Applied Roof Sys			
14. Cements-Adhesives – Coatings			
15. Roof Tile Adhesive			
16. Spray Applied Polyurethane Roof			
17. Other			
E. SHUTTERS			
1. Accordion			
2. Bahama			
3. Storm Panels			
4. Colonial			
5. Roll-up			
6. Equipment			
7. Others			
F. SKYLIGHTS			
1. Skylight			
2. Other			
G. STRUCTURAL COMPONENTS			
1. Wood connector/anchor			
2. Truss plates			
3. Engineered lumber			
4. Railing			
5. Coolers-freezers			
6. Concrete Admixtures			
7. Material			
8. Insulation Forms			
9. Plastics			
10. Deck-Roof			
11. Wall			
12. Sheds			
13. Other			
H. NEW EXTERIOR ENVELOPE PRODUCTS			
1.			
2.			

The products listed below did not demonstrate product approval at plan review. I understand that at the time of inspection of these products, the following information must be available to the inspector on the jobsite; 1) copy of the product approval, 2) the performance characteristics which the product was tested and certified to comply with, 3) copy of the applicable manufacturers installation requirements.

I understand these products may have to be removed if approval cannot be demonstrated during inspectio

Contractor or Contractor's Authorized Agent Signature

Jerry M Hudson 6-4-09

Print Name Date

ITW Building Components Group, Inc.

1950 Marley Drive Haines City, FL 33844
Florida Engineering Certificate of Authorization Number: 0 278
Florida Certificate of Product Approval # FL1999
 Document ID:1TQ38228Z0119140018

Truss Fabricator:	Anderson Truss Company
Job Identification:	9-070--Freeman Design Group Hudson -- , **
Truss Count:	53
Model Code:	Florida Building Code
Truss Criteria:	FBC2007Res/TPI-2002(STD)
Engineering Software:	Alpine Software,Version 8.07.
Structural Engineer of Record:	The identity of the structural EOR did not exist as of
Address:	the seal date per section 61G15-31.003(5a) of the FAC
Minimum Design Loads:	Roof - 40.0 PSF @ 1.25 Duration Floor - N/A Wind - 110 MPH ASCE 7-05 -Closed

Seal Date: 03/19/2009

-Truss Design Engineer-
Doug Fleming
Florida License Number: 66648
1950 Marley Drive
Haines City, FL 33844

Notes:

1. Determination as to the suitability of these truss components for the structure is the responsibility of the building designer/engineer of record, as defined in ANSI/TPI 1
2. The drawing date shown on this index sheet must match the date shown on the individual truss component drawing.
3. As shown on attached drawings; the drawing number is preceded by: HCUSR8228

Details: BRCLBSUB-PB120-

#	Ref Description	Drawing#	Date
1	25813--H7A	09078004	03/19/09
2	25814--H7AA	09078005	03/19/09
3	25815--H9A	09078052	03/19/09
4	25816--H9AA	09078006	03/19/09
5	25817--H11A	09078007	03/19/09
6	25818--H11AA	09078008	03/19/09
7	25819--H13A	09078009	03/19/09
8	25820--H13AA	09078010	03/19/09
9	25821--H15A	09078011	03/19/09
10	25822--H15AA	09078012	03/19/09
11	25823--H17A	09078013	03/19/09
12	25824--H17AA	09078014	03/19/09
13	25825--H19A	09078015	03/19/09
14	25826--H19AA	09078016	03/19/09
15	25827--H21A	09078017	03/19/09
16	25828--H21AA	09078018	03/19/09
17	25829--A1	09078019	03/19/09
18	25830--A2	09078020	03/19/09
19	25831--A3	09078021	03/19/09
20	25832--H7B	09078022	03/19/09
21	25833--H9B	09078001	03/19/09
22	25834--H11B	09078002	03/19/09
23	25835--C2-GDR	09078053	03/19/09
24	25836--C1	09078003	03/19/09
25	25837--J1	09078023	03/19/09
26	25838--HJ7	09078024	03/19/09
27	25839--J3	09078025	03/19/09
28	25840--J5	09078026	03/19/09
29	25841--EJ7	09078027	03/19/09
30	25842--EJ7A	09078028	03/19/09
31	25843--J1A	09078029	03/19/09
32	25844--HJ7A	09078030	03/19/09
33	25845--HJ7B	09078031	03/19/09
34	25846--HJ7D	09078032	03/19/09
35	25847--HJ7C	09078033	03/19/09
36	25848--J1B	09078034	03/19/09
37	25849--J3A	09078035	03/19/09
38	25850--J3B	09078036	03/19/09
39	25851--J5A	09078037	03/19/09
40	25852--J5B	09078038	03/19/09
41	25853--J1C	09078039	03/19/09
42	25854--J3C	09078040	03/19/09
43	25855--J5C	09078041	03/19/09
44	25856--J1D	09078042	03/19/09
45	25857--J3D	09078043	03/19/09
46	25858--J5D	09078044	03/19/09
47	25859--EJ7B	09078045	03/19/09
48	25860--EJ7C	09078046	03/19/09
49	25861--EJ7D	09078047	03/19/09
50	25862--EJ7E	09078048	03/19/09
51	25863--PB1	09078049	03/19/09
52	25864--PB2	09078050	03/19/09
53	25865--PB3	09078051	03/19/09

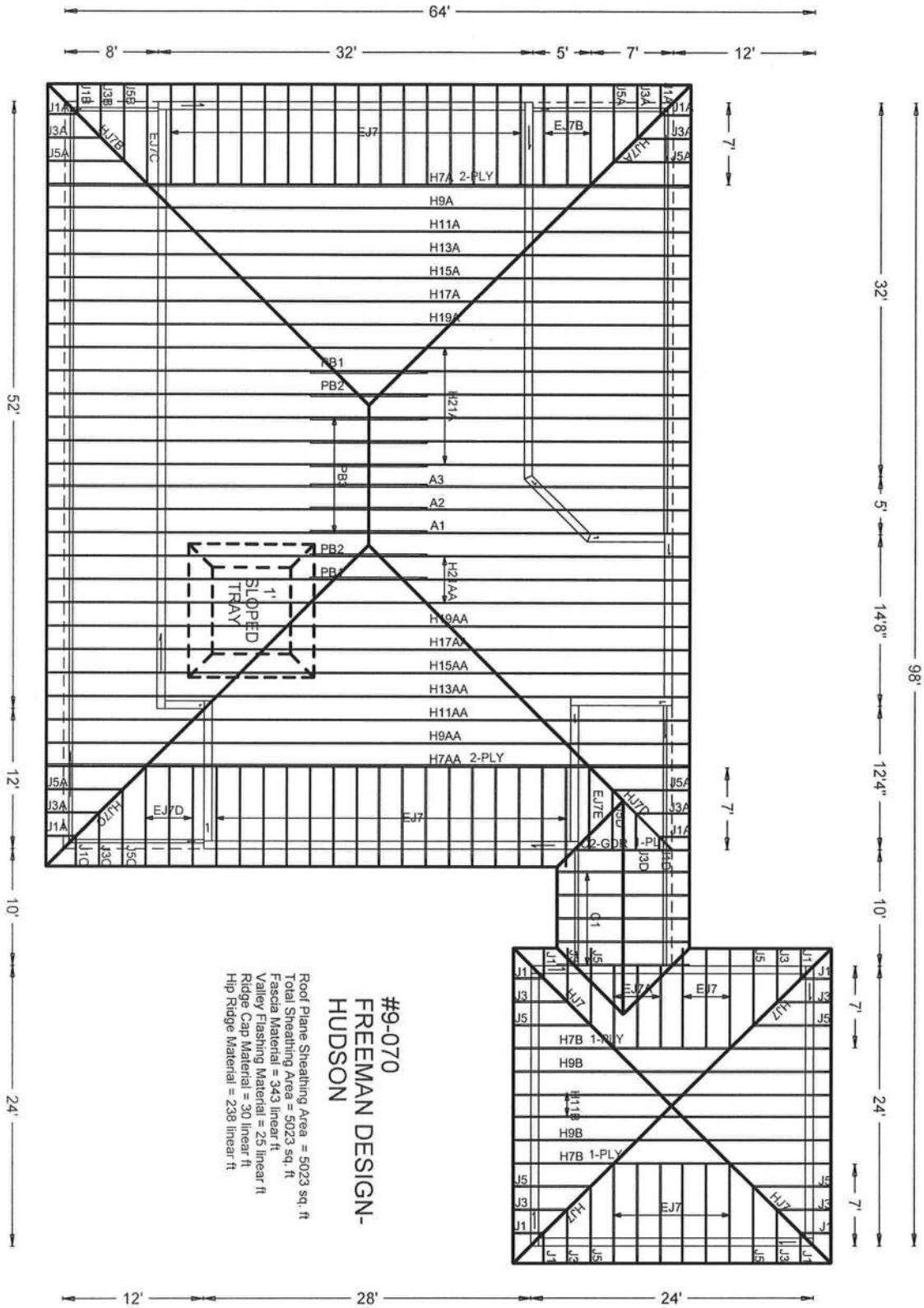

#9-070 FREEMAN DESIGN-HUDSON

Roof Plane Sheathing Area = 5023 sq. ft
Total Sheathing Area = 5023 sq. ft
Fascia Material = 343 linear ft
Valley Flashing Material = 25 linear ft
Ridge Cap Material = 30 linear ft
Hip Ridge Material = 238 linear ft

JOB DESCRIPTION:: Freeman Design Group
/: Hudson

JOB NO: 9-070

PAGE NO: 1 OF 1

(9-070--Freeman Design Group Hudson -- , ** - H7A)

Top chord 2x6 SP #2
Bot chord 2x6 SP #2
Webs 2x4 SP #3

Negative reaction(s) of -547# MAX. (See below) from a non-wind load case requires uplift connection. **

110 mph wind, 15.00 ft mean hgt, ASCE 7-05, PART._ENC. bldg, Located anywhere in roof, CAT II, EXP B, wind TC DL=5.0 psf, wind BC DL=5.0 psf. Iw=1.00 GCpi(+/-)=0.55

Roof overhang supports 2.00 psf soffit load.

#1 hip supports 7-0-0 jacks W/2 panel TC and no end vert.

Deflection meets L/240 live and L/180 total load.

WARNING: Furnish a copy of this DWG to the installation contractor. Special care must be taken during handling, shipping and installation of trusses. See "WARNING" note below.

TRUSS MAY NOT BE INSTALLED END FOR END.

2 COMPLETE TRUSSES REQUIRED

Nailing Schedule: (12d_Common_(0.148"x3.25",_min.)_nails)
Top Chord: 1 Row @12.00" o.c.
Bot Chord: 1 Row @12.00" o.c.
Webs : 1 Row @ 4" o.c.
Use equal spacing between rows and stagger nails in each row to avoid splitting.

Wind reactions based on MWFRS pressures.

In lieu of structural panels use purlins to brace all flat TC @ 24" OC.

Left side jacks have 7-0-0 setback with 0-5-8 cant and 1-6-0 overhang. End jacks have 7-0-0 setback with 0-5-8 cant and 1-6-0 overhang. Right side jacks have 7-0-0 setback with 0-5-8 cant and 1-6-0 overhang.

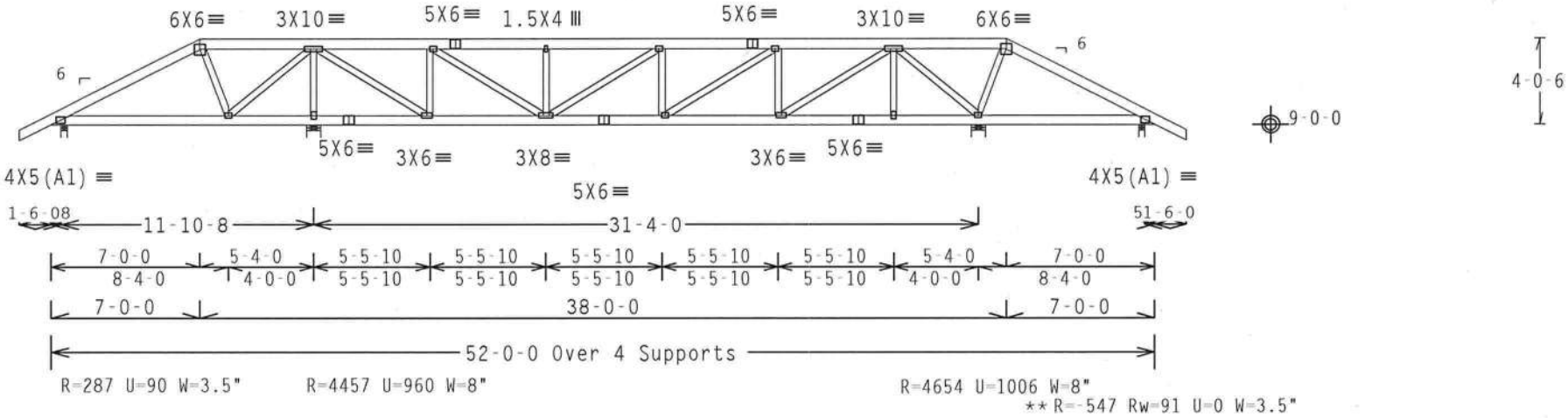

Note: All Plates Are 3X4 Except As Shown.

Design Crit: FBC2007Res/TPI-2002(STD)

PLT TYP. Wave FT/RT=10%(0%)/0(0) 8.07.00 QTY:1 FL/-/4/-/-/R/- Scale =.125"/Ft.

ALPINE
ITW Building Components Group Inc.
Haines City, FL 33844
FL COA #0 278

WARNING TRUSSES REQUIRE EXTREME CARE IN FABRICATION, HANDLING, SHIPPING, INSTALLING AND BRACING. REFER TO BCSI (BUILDING COMPONENT SAFETY INFORMATION), PUBLISHED BY TPI (TRUSS PLATE INSTITUTE, 218 NORTH LEE STREET, SUITE 312, ALEXANDRIA, VA, 22314) AND WTCA (WOOD TRUSS COUNCIL OF AMERICA, 6300 ENTERPRISE LANE, MADISON, WI 53719) FOR SAFETY PRACTICES PRIOR TO PERFORMING THESE FUNCTIONS. UNLESS OTHERWISE INDICATED TOP CHORD SHALL HAVE PROPERLY ATTACHED STRUCTURAL PANELS AND BOTTOM CHORD SHALL HAVE A PROPERLY ATTACHED RIGID CEILING.

IMPORTANT FURNISH A COPY OF THIS DESIGN TO THE INSTALLATION CONTRACTOR. ITW BCG, INC. SHALL NOT BE RESPONSIBLE FOR ANY DEVIATION FROM THIS DESIGN; ANY FAILURE TO BUILD THE TRUSS IN CONFORMANCE WITH TPI; OR FABRICATING, HANDLING, SHIPPING, INSTALLING & BRACING OF TRUSSES. DESIGN CONFORMS WITH APPLICABLE PROVISIONS OF NDS (NATIONAL DESIGN SPEC. BY AF&PA) AND TPI. ITW BCG CONNECTOR PLATES ARE MADE OF 20/18/16GA (W,H/SS/K) ASTM A653 GRADE 40/60 (W, K/H,SS) GALV. STEEL. APPLY PLATES TO EACH FACE OF TRUSS AND, UNLESS OTHERWISE LOCATED ON THIS DESIGN, POSITION PER DRAWINGS 160A-Z. ANY INSPECTION OF PLATES FOLLOWED BY (1) SHALL BE PER ANNEX A3 OF TPI1-2002 SEC.3. A SEAL ON THIS DRAWING INDICATES ACCEPTANCE OF PROFESSIONAL ENGINEERING RESPONSIBILITY SOLELY FOR THE TRUSS COMPONENT DESIGN SHOWN. THE SUITABILITY AND USE OF THIS COMPONENT FOR ANY BUILDING IS THE RESPONSIBILITY OF THE BUILDING DESIGNER PER ANSI/TPI 1 SEC. 2.

DOUGLAS FLEMING LICENSE No. 66648 STATE OF FLORIDA PROFESSIONAL ENGINEER
MAR 19 '09

TC LL	20.0 PSF	REF	R8228- 25813
TC DL	10.0 PSF	DATE	03/19/09
BC DL	10.0 PSF	DRW	HCUSR8228 09078004
BC LL	0.0 PSF	HC-ENG	DF/DF
TOT.LD.	40.0 PSF	SEQN-	9346
DUR.FAC.	1.25	FROM	AH
SPACING	SEE ABOVE	JREF-	1TQ38228Z01

Top chord 2x6 SP #2
Bot chord 2x6 SP #2
Webs 2x4 SP #3

Negative reaction(s) of -549# MAX. (See below) from a non-wind load case requires uplift connection. **

110 mph wind, 15.00 ft mean hgt, ASCE 7-05, PART._ENC. bldg, Located anywhere in roof, CAT II, EXP B, wind TC DL=5.0 psf, wind BC DL=5.0 psf. Iw=1.00 GCpi(+/-)=0.55

Roof overhang supports 2.00 psf soffit load.

#1 hip supports 7-0-0 jacks W/2 panel TC and no end vert.

Deflection meets L/240 live and L/180 total load.

WARNING: Furnish a copy of this DWG to the installation contractor. Special care must be taken during handling, shipping and installation of trusses. See "WARNING" note below.

TRUSS MAY NOT BE INSTALLED END FOR END.

2 COMPLETE TRUSSES REQUIRED

Nailing Schedule: (12d_Common_(0.148"x3.25",_min.)_nails)
Top Chord: 1 Row @12.00" o.c.
Bot Chord: 1 Row @12.00" o.c.
Webs : 1 Row @ 4" o.c.
Use equal spacing between rows and stagger nails in each row to avoid splitting.

Wind reactions based on MWFRS pressures.

In lieu of structural panels use purlins to brace all flat TC @ 24" OC.

Left side jacks have 7-0-0 setback with 0-5-8 cant and 1-6-0 overhang. End jacks have 7-0-0 setback with 0-5-8 cant and 1-6-0 overhang. Right side jacks have 7-0-0 setback with 0-5-8 cant and 1-6-0 overhang.

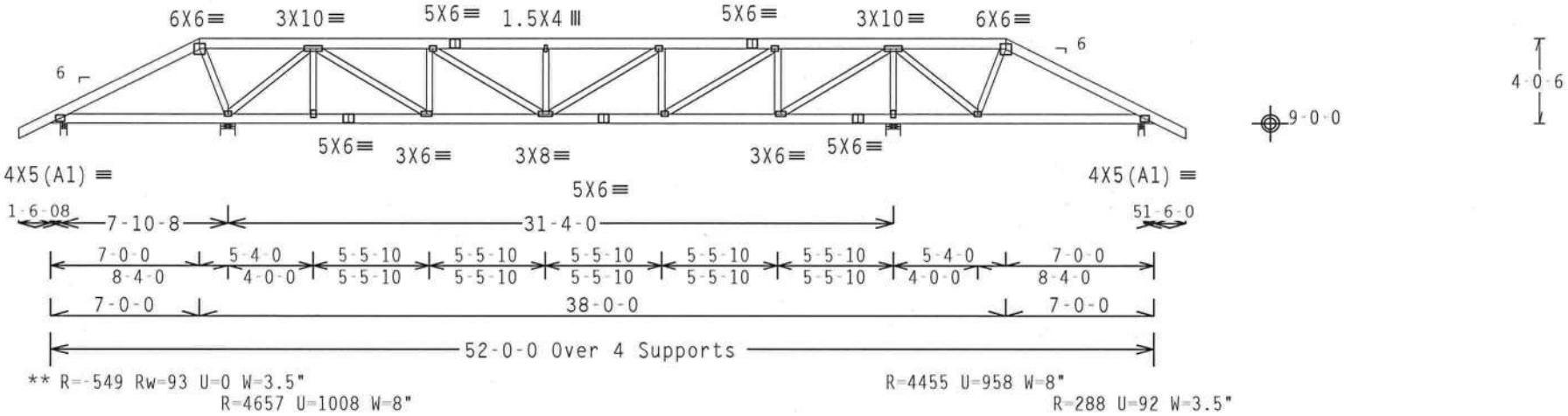

Note: All Plates Are 3X4 Except As Shown.

Design Crit: FBC2007Res/TPI-2002(STD)

PLT TYP. Wave | FT/RT=10%(0%)/0(0) | 8.07.06 | QTY:1 | FL/-/4/-/-/R/- | Scale =.125"/Ft.

ALPINE
ITW Building Components Group Inc.
Haines City, FL 33844
FL COA #0 278

WARNING TRUSSES REQUIRE EXTREME CARE IN FABRICATION, HANDLING, SHIPPING, INSTALLING AND BRACING. REFER TO BCSI (BUILDING COMPONENT SAFETY INFORMATION), PUBLISHED BY TPI (TRUSS PLATE INSTITUTE, 218 NORTH LEE STREET, SUITE 312, ALEXANDRIA, VA, 22314) AND WTCA (WOOD TRUSS COUNCIL OF AMERICA, 6300 ENTERPRISE LANE, MADISON, WI 53719) FOR SAFETY PRACTICES PRIOR TO PERFORMING THESE FUNCTIONS. UNLESS OTHERWISE INDICATED TOP CHORD SHALL HAVE PROPERLY ATTACHED STRUCTURAL PANELS AND BOTTOM CHORD SHALL HAVE A PROPERLY ATTACHED RIGID CEILING.

IMPORTANT FURNISH A COPY OF THIS DESIGN TO THE INSTALLATION CONTRACTOR. ITW BCG, INC. SHALL NOT BE RESPONSIBLE FOR ANY DEVIATION FROM THIS DESIGN; ANY FAILURE TO BUILD THE TRUSS IN COMFORMANCE WITH TPI; OR FABRICATING, HANDLING, SHIPPING, INSTALLING & BRACING OF TRUSSES. DESIGN CONFORMS WITH APPLICABLE PROVISIONS OF NDS (NATIONAL DESIGN SPEC. BY AF&PA) AND TPI. ITW BCG CONNECTOR PLATES ARE MADE OF 20/18/16GA (W,H/SS/K) ASTM A653 GRADE 40/60 (W, K/H,SS) GALV. STEEL. APPLY PLATES TO EACH FACE OF TRUSS AND, UNLESS OTHERWISE LOCATED ON THIS DESIGN, POSITION PER DRAWINGS 160A-Z. ANY INSPECTION OF PLATES FOLLOWED BY (1) SHALL BE PER ANNEX A3 OF TPI1-2002 SEC.3. A SEAL ON THIS DRAWING INDICATES ACCEPTANCE OF PROFESSIONAL ENGINEERING RESPONSIBILITY SOLELY FOR THE TRUSS COMPONENT DESIGN SHOWN. THE SUITABILITY AND USE OF THIS COMPONENT FOR ANY BUILDING IS THE RESPONSIBILITY OF THE BUILDING DESIGNER PER ANSI/TPI 1 SEC. 2.

DOUGLAS FLEMING LICENSE No. 66648 STATE OF FLORIDA PROFESSIONAL ENGINEER
MAR 19 '09

TC LL	20.0 PSF	REF	R8228- 25814
TC DL	10.0 PSF	DATE	03/19/09
BC DL	10.0 PSF	DRW	HCUSR8228 09078005
BC LL	0.0 PSF	HC-ENG	DF/DF
TOT.LD.	40.0 PSF	SEQN-	9354
DUR.FAC.	1.25	FROM	AH
SPACING	SEE ABOVE	JREF-	1TQ38228Z01

Top chord 2x6 SP #2
Bot chord 2x6 SP #2
Webs 2x4 SP #3

Roof overhang supports 2.00 psf soffit load.

In lieu of structural panels use purlins to brace all flat TC @ 24" OC.

WARNING: Furnish a copy of this DWG to the installation contractor. Special care must be taken during handling, shipping and installation of trusses. See "WARNING" note below.

110 mph wind, 15.00 ft mean hgt, ASCE 7-05, PART. ENC. bldg, not located within 6.50 ft from roof edge, CAT II, EXP B, wind TC DL=5.0 psf, wind BC DL=5.0 psf. Iw=1.00 GCpi(+/-)=0.55

Wind reactions based on MWFRS pressures.

Bottom chord checked for 10.00 psf non-concurrent live load.

Deflection meets L/240 live and L/180 total load.

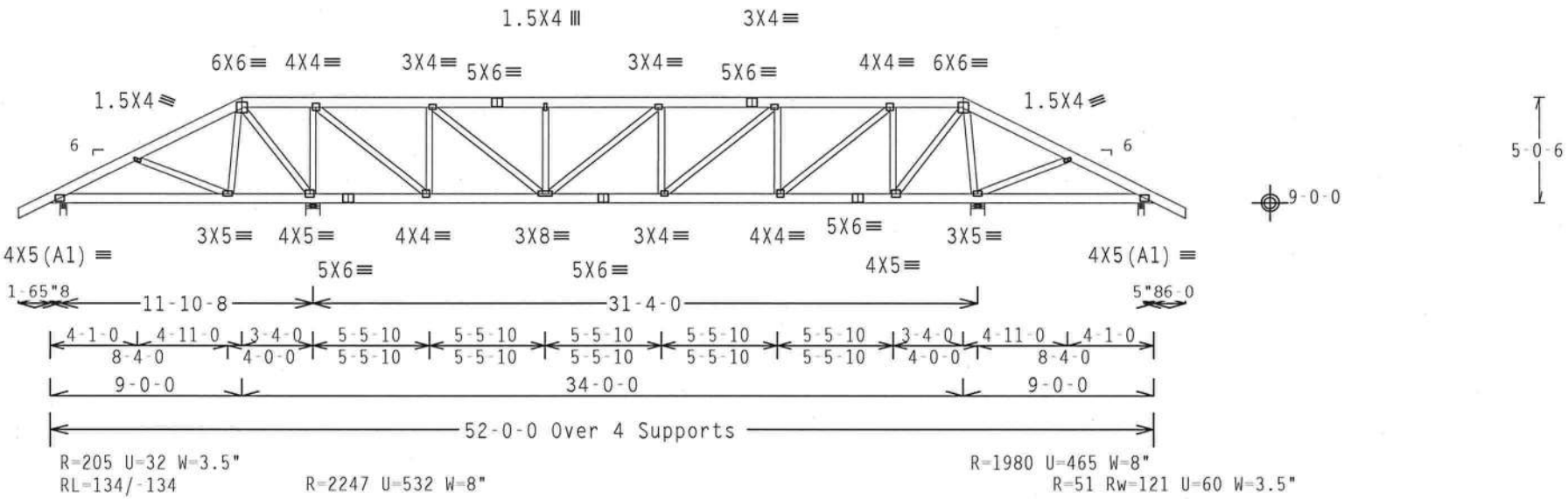

Design Crit: FBC2007Res/TPI-2002(STD)

PLT TYP. Wave | FT/RT=10%(0%)/0(0) | 8.07.00 | QTY:1 | FL/-/4/-/-/R/- | Scale =.125"/Ft.

ALPINE
ITW Building Components Group Inc.
Haines City, FL 33844
FL COA #0 278

WARNING TRUSSES REQUIRE EXTREME CARE IN FABRICATION, HANDLING, SHIPPING, INSTALLING AND BRACING. REFER TO BCSI (BUILDING COMPONENT SAFETY INFORMATION), PUBLISHED BY TPI (TRUSS PLATE INSTITUTE, 218 NORTH LEE STREET, SUITE 312, ALEXANDRIA, VA, 22314) AND WTCA (WOOD TRUSS COUNCIL OF AMERICA, 6300 ENTERPRISE LANE, MADISON, WI 53719) FOR SAFETY PRACTICES PRIOR TO PERFORMING THESE FUNCTIONS. UNLESS OTHERWISE INDICATED TOP CHORD SHALL HAVE PROPERLY ATTACHED STRUCTURAL PANELS AND BOTTOM CHORD SHALL HAVE A PROPERLY ATTACHED RIGID CEILING.

IMPORTANT FURNISH A COPY OF THIS DESIGN TO THE INSTALLATION CONTRACTOR. ITW BCG, INC. SHALL NOT BE RESPONSIBLE FOR ANY DEVIATION FROM THIS DESIGN; ANY FAILURE TO BUILD THE TRUSS IN COMFORMANCE WITH TPI; OR FABRICATING, HANDLING, SHIPPING, INSTALLING & BRACING OF TRUSSES.
DESIGN CONFORMS WITH APPLICABLE PROVISIONS OF NDS (NATIONAL DESIGN SPEC. BY AF&PA) AND TPI. ITW BCG CONNECTOR PLATES ARE MADE OF 20/18/16GA (W,H/SS/K) ASTM A653 GRADE 40/60 (W, K/H,SS) GALV. STEEL. APPLY PLATES TO EACH FACE OF TRUSS AND, UNLESS OTHERWISE LOCATED ON THIS DESIGN, POSITION PER DRAWINGS 160A-Z. ANY INSPECTION OF PLATES FOLLOWED BY (1) SHALL BE PER ANNEX A3 OF TPI1-2002 SEC.3. A SEAL ON THIS DRAWING INDICATES ACCEPTANCE OF PROFESSIONAL ENGINEERING RESPONSIBILITY SOLELY FOR THE TRUSS COMPONENT DESIGN SHOWN. THE SUITABILITY AND USE OF THIS COMPONENT FOR ANY BUILDING IS THE RESPONSIBILITY OF THE BUILDING DESIGNER PER ANSI/TPI 1 SEC. 2.

DOUGLAS FLEMING LICENSE No. 66648 STATE OF FLORIDA PROFESSIONAL ENGINEER
19 '09

TC LL	20.0 PSF	REF	R8228- 25815
TC DL	10.0 PSF	DATE	03/19/09
BC DL	10.0 PSF	DRW	HCUSR8228 09078052
BC LL	0.0 PSF	HC-ENG	DF/DF
TOT.LD.	40.0 PSF	SEQN-	9384
DUR.FAC.	1.25	FROM	AH
SPACING	24.0"	JREF-	1TQ38228Z01

Top chord 2x6 SP #2
Bot chord 2x6 SP #2
Webs 2x4 SP #3

Roof overhang supports 2.00 psf soffit load.

In lieu of structural panels use purlins to brace all flat TC @ 24" OC.

WARNING: Furnish a copy of this DWG to the installation contractor. Special care must be taken during handling, shipping and installation of trusses. See "WARNING" note below.

110 mph wind, 15.00 ft mean hgt, ASCE 7-05, PART._ENC. bldg, not located within 6.50 ft from roof edge, CAT II, EXP B, wind TC DL=5.0 psf, wind BC DL=5.0 psf. Iw=1.00 GCpi(+/-)=0.55

Wind reactions based on MWFRS pressures.

Bottom chord checked for 10.00 psf non-concurrent live load.

Deflection meets L/240 live and L/180 total load.

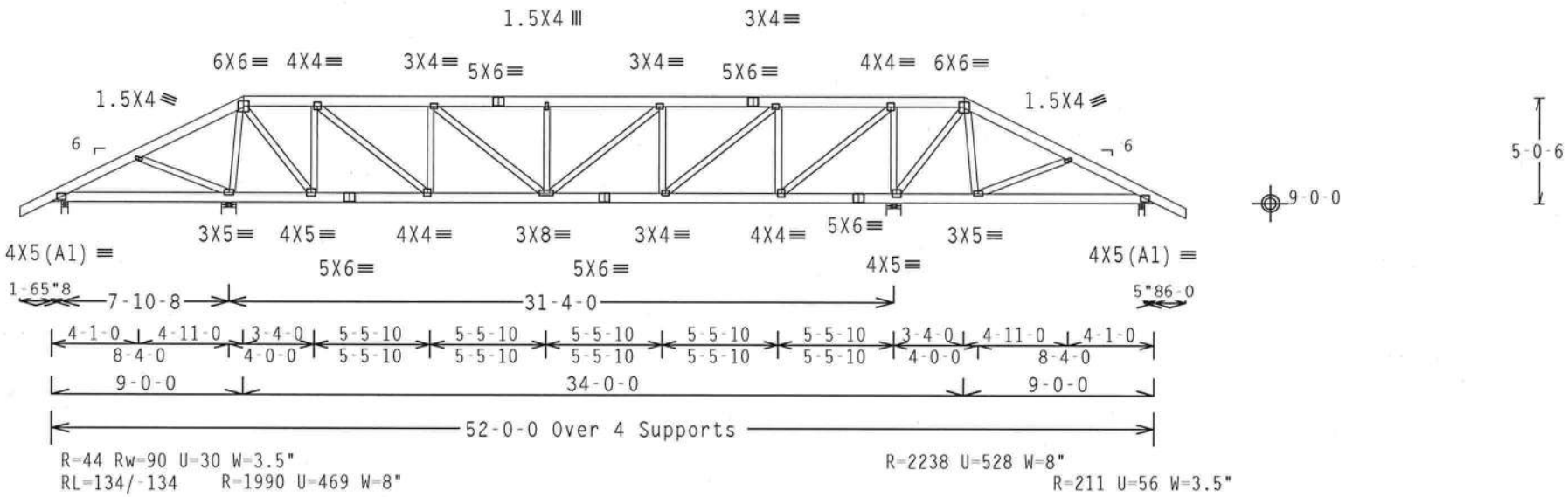

Design Crit: FBC2007Res/TPI-2002(STD)

PLT TYP. Wave FT/RT=10%(0%)/0(0) 8.07.00 QTY:1 FL/-/4/-/-/R/- Scale =.125"/Ft.

ALPINE
ITW Building Components Group Inc.
Haines City, FL 33844
FL COA #0 278

WARNING TRUSSES REQUIRE EXTREME CARE IN FABRICATION, HANDLING, SHIPPING, INSTALLING AND BRACING. REFER TO BCSI (BUILDING COMPONENT SAFETY INFORMATION), PUBLISHED BY TPI (TRUSS PLATE INSTITUTE, 218 NORTH LEE STREET, SUITE 312, ALEXANDRIA, VA, 22314) AND WTCA (WOOD TRUSS COUNCIL OF AMERICA, 6300 ENTERPRISE LANE, MADISON, WI 53719) FOR SAFETY PRACTICES PRIOR TO PERFORMING THESE FUNCTIONS. UNLESS OTHERWISE INDICATED TOP CHORD SHALL HAVE PROPERLY ATTACHED STRUCTURAL PANELS AND BOTTOM CHORD SHALL HAVE A PROPERLY ATTACHED RIGID CEILING.

IMPORTANTFURNISH A COPY OF THIS DESIGN TO THE INSTALLATION CONTRACTOR. ITW BCG, INC. SHALL NOT BE RESPONSIBLE FOR ANY DEVIATION FROM THIS DESIGN; ANY FAILURE TO BUILD THE TRUSS IN COMFORMANCE WITH TPI; OR FABRICATING, HANDLING, SHIPPING, INSTALLING & BRACING OF TRUSSES.
DESIGN CONFORMS WITH APPLICABLE PROVISIONS OF NDS (NATIONAL DESIGN SPEC. BY AF&PA) AND TPI. ITW BCG CONNECTOR PLATES ARE MADE OF 20/18/16GA (W,H/SS/K) ASTM A653 GRADE 40/60 (W, K/H,SS) GALV. STEEL. APPLY PLATES TO EACH FACE OF TRUSS AND, UNLESS OTHERWISE LOCATED ON THIS DESIGN, POSITION PER DRAWINGS 160A-Z. ANY INSPECTION OF PLATES FOLLOWED BY (1) SHALL BE PER ANNEX A3 OF TPI1-2002 SEC.3. A SEAL ON THIS DRAWING INDICATES ACCEPTANCE OF PROFESSIONAL ENGINEERING RESPONSIBILITY SOLELY FOR THE TRUSS COMPONENT DESIGN SHOWN. THE SUITABILITY AND USE OF THIS COMPONENT FOR ANY BUILDING IS THE RESPONSIBILITY OF THE BUILDING DESIGNER PER ANSI/TPI 1 SEC. 2.

DOUGLAS FLEMING LICENSE No. 66648 STATE OF FLORIDA PROFESSIONAL ENGINEER
Mar 19 '09

TC LL	20.0 PSF	REF	R8228- 25816
TC DL	10.0 PSF	DATE	03/19/09
BC DL	10.0 PSF	DRW	HCUSR8228 09078006
BC LL	0.0 PSF	HC-ENG	DF/DF
TOT.LD.	40.0 PSF	SEQN-	9398
DUR.FAC.	1.25	FROM	AH
SPACING	24.0"	JREF-	1TQ38228Z01

Top chord 2x6 SP #2
Bot chord 2x6 SP #2
Webs 2x4 SP #3

Roof overhang supports 2.00 psf soffit load.

(A) 1x4 #3SRB SPF-S or better "T" brace. 80% length of web member. Attach with 8d Box or Gun (0.113"x2.5",min.)nails @ 6" OC.

Bottom chord checked for 10.00 psf non-concurrent live load.

WARNING: Furnish a copy of this DWG to the installation contractor. Special care must be taken during handling, shipping and installation of trusses. See "WARNING" note below.

110 mph wind, 15.00 ft mean hgt, ASCE 7-05, PART._ENC. bldg, not located within 6.50 ft from roof edge, CAT II, EXP B, wind TC DL=5.0 psf, wind BC DL=5.0 psf. Iw=1.00 GCpi(+/-)=0.55

Wind reactions based on MWFRS pressures.

In lieu of structural panels use purlins to brace all flat TC @ 24" OC.

Deflection meets L/240 live and L/180 total load.

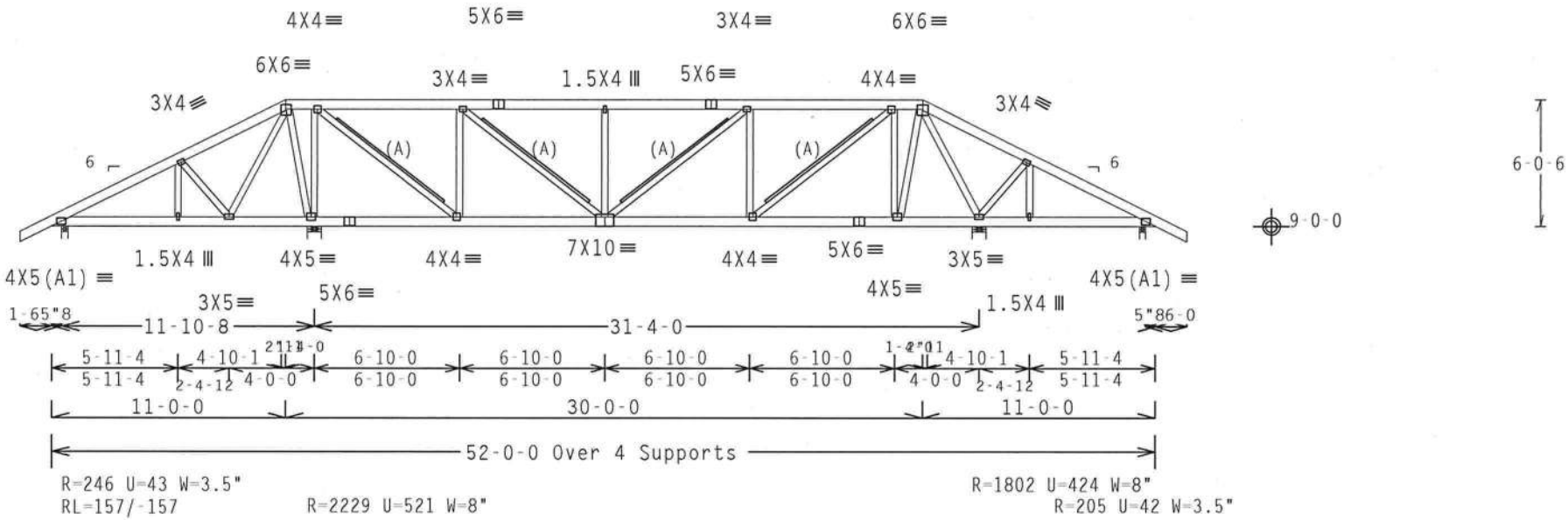

Design Crit: FBC2007Res/TPI-2002(STD)

PLT TYP. Wave FT/RT=10%(0%)/0(0) 8.07.00 QTY:1 FL/-/4/-/-/R/- Scale =.125"/Ft.

ALPINE
ITW Building Components Group Inc.
Haines City, FL 33844
FL COA #0 278

WARNING TRUSSES REQUIRE EXTREME CARE IN FABRICATION, HANDLING, SHIPPING, INSTALLING AND BRACING. REFER TO BCSI (BUILDING COMPONENT SAFETY INFORMATION), PUBLISHED BY TPI (TRUSS PLATE INSTITUTE, 218 NORTH LEE STREET, SUITE 312, ALEXANDRIA, VA, 22314) AND WTCA (WOOD TRUSS COUNCIL OF AMERICA, 6300 ENTERPRISE LANE, MADISON, WI 53719) FOR SAFETY PRACTICES PRIOR TO PERFORMING THESE FUNCTIONS. UNLESS OTHERWISE INDICATED TOP CHORD SHALL HAVE PROPERLY ATTACHED STRUCTURAL PANELS AND BOTTOM CHORD SHALL HAVE A PROPERLY ATTACHED RIGID CEILING.

IMPORTANT FURNISH A COPY OF THIS DESIGN TO THE INSTALLATION CONTRACTOR. ITW BCG, INC. SHALL NOT BE RESPONSIBLE FOR ANY DEVIATION FROM THIS DESIGN; ANY FAILURE TO BUILD THE TRUSS IN COMFORMANCE WITH TPI; OR FABRICATING, HANDLING, SHIPPING, INSTALLING & BRACING OF TRUSSES.
DESIGN CONFORMS WITH APPLICABLE PROVISIONS OF NDS (NATIONAL DESIGN SPEC, BY AF&PA) AND TPI. ITW BCG CONNECTOR PLATES ARE MADE OF 20/18/16GA (W,H/SS/K) ASTM A653 GRADE 40/60 (W, K/H,SS) GALV. STEEL. APPLY PLATES TO EACH FACE OF TRUSS AND, UNLESS OTHERWISE LOCATED ON THIS DESIGN, POSITION PER DRAWINGS 160A-Z. ANY INSPECTION OF PLATES FOLLOWED BY (1) SHALL BE PER ANNEX A3 OF TPI1-2002 SEC.3. A SEAL ON THIS DRAWING INDICATES ACCEPTANCE OF PROFESSIONAL ENGINEERING RESPONSIBILITY SOLELY FOR THE TRUSS COMPONENT DESIGN SHOWN. THE SUITABILITY AND USE OF THIS COMPONENT FOR ANY BUILDING IS THE RESPONSIBILITY OF THE BUILDING DESIGNER PER ANSI/TPI 1 SEC. 2.

DOUGLAS FLEMING LICENSE No. 66648 STATE OF FLORIDA PROFESSIONAL ENGINEER
19 '09

TC LL	20.0 PSF	REF	R8228- 25817
TC DL	10.0 PSF	DATE	03/19/09
BC DL	10.0 PSF	DRW	HCUSR8228 09078007
BC LL	0.0 PSF	HC-ENG	DF/DF
TOT.LD.	40.0 PSF	SEQN-	9405
DUR.FAC.	1.25	FROM	AH
SPACING	24.0"	JREF-	1TQ38228Z01

(9-070--Freeman Design Group Hudson -- , ** - H11XA)

Top chord 2x6 SP #2
Bot chord 2x6 SP #2
Webs 2x4 SP #3

Roof overhang supports 2.00 psf soffit load.

(A) 1x4 #3SRB SPF-S or better "T" brace. 80% length of web member. Attach with 8d Box or Gun (0.113"x2.5",min.)nails @ 6" OC.

Bottom chord checked for 10.00 psf non-concurrent live load.

WARNING: Furnish a copy of this DWG to the installation contractor. Special care must be taken during handling, shipping and installation of trusses. See "WARNING" note below.

110 mph wind, 15.00 ft mean hgt, ASCE 7-05, PART._ENC. bldg, not located within 6.50 ft from roof edge, CAT II, EXP B, wind TC DL=5.0 psf, wind BC DL=5.0 psf. Iw=1.00 GCpi(+/-)=0.55

Wind reactions based on MWFRS pressures.

In lieu of structural panels use purlins to brace all flat TC @ 24" OC.

Deflection meets L/240 live and L/180 total load.

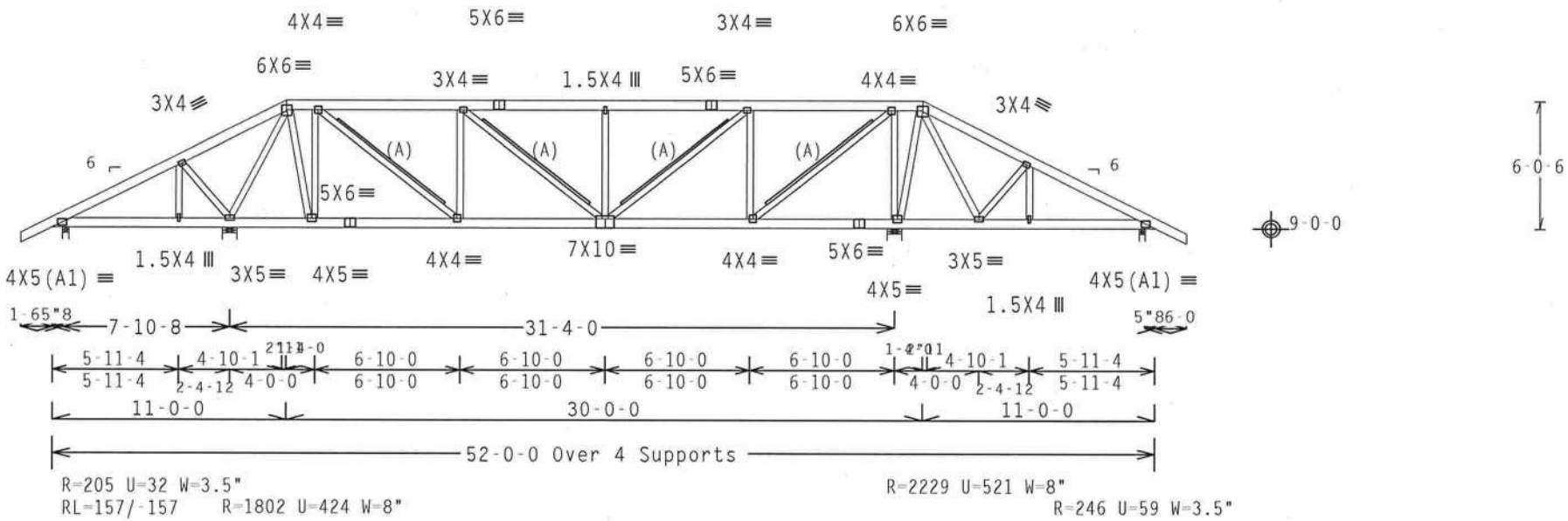

Design Crit: FBC2007Res/TPI-2002(STD)

PLT TYP. Wave — FT/RT=10%(0%)/0(0) — 8.07.00 — QTY:1 — FL/-/4/-/-/R/- — Scale =.125"/Ft.

ALPINE
ITW Building Components Group Inc.
Haines City, FL 33844
FL COA #0 278

WARNING TRUSSES REQUIRE EXTREME CARE IN FABRICATION, HANDLING, SHIPPING, INSTALLING AND BRACING. REFER TO BCSI (BUILDING COMPONENT SAFETY INFORMATION), PUBLISHED BY TPI (TRUSS PLATE INSTITUTE, 218 NORTH LEE STREET, SUITE 312, ALEXANDRIA, VA, 22314) AND WTCA (WOOD TRUSS COUNCIL OF AMERICA, 6300 ENTERPRISE LANE, MADISON, WI 53719) FOR SAFETY PRACTICES PRIOR TO PERFORMING THESE FUNCTIONS. UNLESS OTHERWISE INDICATED TOP CHORD SHALL HAVE PROPERLY ATTACHED STRUCTURAL PANELS AND BOTTOM CHORD SHALL HAVE A PROPERLY ATTACHED RIGID CEILING.

IMPORTANT FURNISH A COPY OF THIS DESIGN TO THE INSTALLATION CONTRACTOR. ITW BCG, INC. SHALL NOT BE RESPONSIBLE FOR ANY DEVIATION FROM THIS DESIGN; ANY FAILURE TO BUILD THE TRUSS IN COMFORMANCE WITH TPI; OR FABRICATING, HANDLING, SHIPPING, INSTALLING & BRACING OF TRUSSES.
DESIGN CONFORMS WITH APPLICABLE PROVISIONS OF NDS (NATIONAL DESIGN SPEC, BY AF&PA) AND TPI. ITW BCG CONNECTOR PLATES ARE MADE OF 20/18/16GA (W,H/SS/K) ASTM A653 GRADE 40/60 (W, K/H,SS) GALV. STEEL. APPLY PLATES TO EACH FACE OF TRUSS AND, UNLESS OTHERWISE LOCATED ON THIS DESIGN, POSITION PER DRAWINGS 160A-Z. ANY INSPECTION OF PLATES FOLLOWED BY (1) SHALL BE PER ANNEX A3 OF TPI1-2002 SEC.3. A SEAL ON THIS DRAWING INDICATES ACCEPTANCE OF PROFESSIONAL ENGINEERING RESPONSIBILITY SOLELY FOR THE TRUSS COMPONENT DESIGN SHOWN. THE SUITABILITY AND USE OF THIS COMPONENT FOR ANY BUILDING IS THE RESPONSIBILITY OF THE BUILDING DESIGNER PER ANSI/TPI 1 SEC. 2.

DOUGLAS FLEMING LICENSE No. 66648 STATE OF FLORIDA PROFESSIONAL ENGINEER
MAR 19 '09

TC LL	20.0 PSF	REF R8228- 25818
TC DL	10.0 PSF	DATE 03/19/09
BC DL	10.0 PSF	DRW HCUSR8228 09078008
BC LL	0.0 PSF	HC-ENG DF/DF
TOT.LD.	40.0 PSF	SEQN- 9410
DUR.FAC.	1.25	FROM AH
SPACING	24.0"	JREF- 1TQ38228Z01

(9-070--Freeman Design Group Hudson - . ** - H13A)

Top chord 2x6 SP #2
Bot chord 2x6 SP #2
Webs 2x4 SP #3

Roof overhang supports 2.00 psf soffit load.

(A) 1x4 #3SRB SPF-S or better "T" brace. 80% length of web member. Attach with 8d Box or Gun (0.113"x2.5",min.)nails @ 6" OC.

Bottom chord checked for 10.00 psf non-concurrent live load.

WARNING: Furnish a copy of this DWG to the installation contractor. Special care must be taken during handling, shipping and installation of trusses. See "WARNING" note below.

110 mph wind, 15.00 ft mean hgt, ASCE 7-05, PART._ENC. bldg, not located within 6.50 ft from roof edge, CAT II, EXP B, wind TC DL=5.0 psf, wind BC DL=5.0 psf. Iw=1.00 GCpi(+/-)=0.55

Wind reactions based on MWFRS pressures.

In lieu of structural panels use purlins to brace all flat TC @ 24" OC.

Deflection meets L/240 live and L/180 total load.

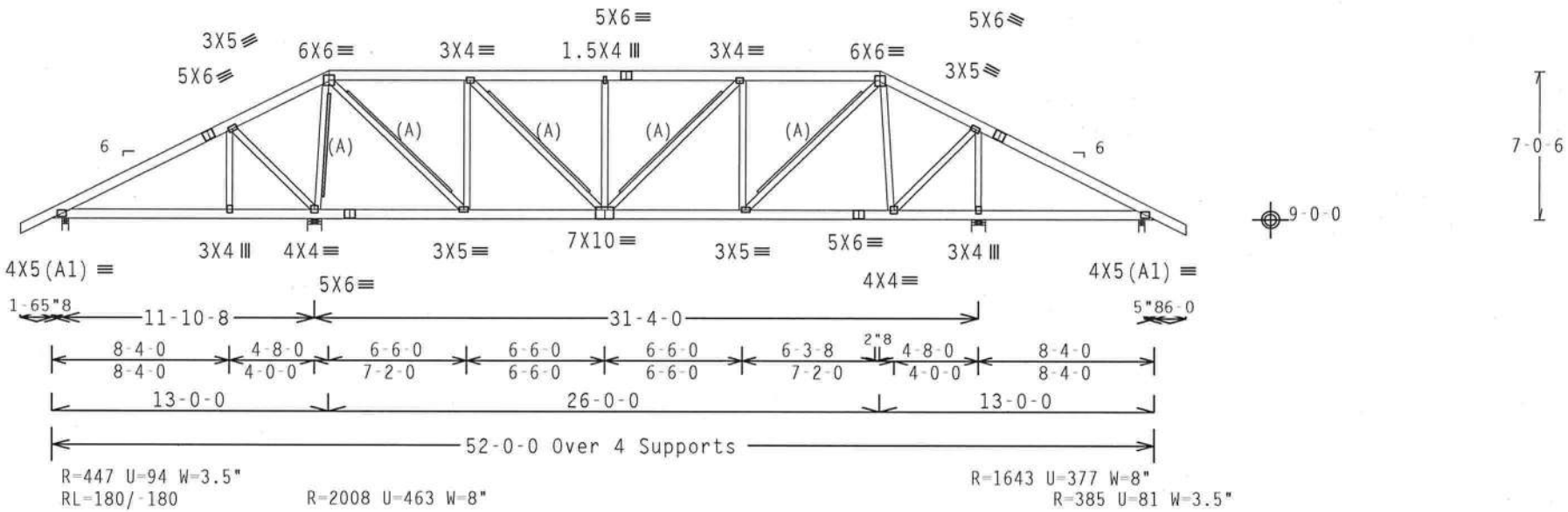

Design Crit: FBC2007Res/TPI-2002(STD)

PLT TYP. Wave FT/RT=10%(0%)/0(0) 8.07.00 QTY:1 FL/-/4/-/-/R/- Scale =.125"/Ft.

ALPINE
ITW Building Components Group Inc.
Haines City, FL 33844
FL COA #0 278

WARNING TRUSSES REQUIRE EXTREME CARE IN FABRICATION, HANDLING, SHIPPING, INSTALLING AND BRACING. REFER TO BCSI (BUILDING COMPONENT SAFETY INFORMATION), PUBLISHED BY TPI (TRUSS PLATE INSTITUTE, 218 NORTH LEE STREET, SUITE 312, ALEXANDRIA, VA, 22314) AND WTCA (WOOD TRUSS COUNCIL OF AMERICA, 6300 ENTERPRISE LANE, MADISON, WI 53719) FOR SAFETY PRACTICES PRIOR TO PERFORMING THESE FUNCTIONS. UNLESS OTHERWISE INDICATED TOP CHORD SHALL HAVE PROPERLY ATTACHED STRUCTURAL PANELS AND BOTTOM CHORD SHALL HAVE A PROPERLY ATTACHED RIGID CEILING.

IMPORTANTFURNISH A COPY OF THIS DESIGN TO THE INSTALLATION CONTRACTOR. ITW BCG, INC. SHALL NOT BE RESPONSIBLE FOR ANY DEVIATION FROM THIS DESIGN; ANY FAILURE TO BUILD THE TRUSS IN COMFORMANCE WITH TPI; OR FABRICATING, HANDLING, SHIPPING, INSTALLING & BRACING OF TRUSSES.
DESIGN CONFORMS WITH APPLICABLE PROVISIONS OF NDS (NATIONAL DESIGN SPEC. BY AF&PA) AND TPI. ITW BCG CONNECTOR PLATES ARE MADE OF 20/18/16GA (W,H/SS/K) ASTM A653 GRADE 40/60 (W, K/H,SS) GALV. STEEL. APPLY PLATES TO EACH FACE OF TRUSS AND, UNLESS OTHERWISE LOCATED ON THIS DESIGN, POSITION PER DRAWINGS 160A-Z. ANY INSPECTION OF PLATES FOLLOWED BY (1) SHALL BE PER ANNEX A3 OF TPI1-2002 SEC.3. A SEAL ON THIS DRAWING INDICATES ACCEPTANCE OF PROFESSIONAL ENGINEERING RESPONSIBILITY SOLELY FOR THE TRUSS COMPONENT DESIGN SHOWN. THE SUITABILITY AND USE OF THIS COMPONENT FOR ANY BUILDING IS THE RESPONSIBILITY OF THE BUILDING DESIGNER PER ANSI/TPI 1 SEC. 2.

DOUGLAS FLEMING LICENSE No. 66648 STATE OF FLORIDA PROFESSIONAL ENGINEER
19 '09

TC LL	20.0 PSF	REF	R8228- 25819
TC DL	10.0 PSF	DATE	03/19/09
BC DL	10.0 PSF	DRW	HCUSR8228 09078009
BC LL	0.0 PSF	HC-ENG	DF/DF
TOT.LD.	40.0 PSF	SEQN-	9420
DUR.FAC.	1.25	FROM	AH
SPACING	24.0"	JREF-	1TQ38228Z01

(9-070--Freeman Design Group Hudson -- , ** - H13AA)

Top chord 2x6 SP #2
Bot chord 2x6 SP #2
Webs 2x4 SP #3

Roof overhang supports 2.00 psf soffit load.

(A) 1x4 #3SRB SPF-S or better "T" brace. 80% length of web member. Attach with 8d Box or Gun (0.113"x2.5",min.)nails @ 6" OC.

Bottom chord checked for 10.00 psf non-concurrent live load.

WARNING: Furnish a copy of this DWG to the installation contractor. Special care must be taken during handling, shipping and installation of trusses. See "WARNING" note below.

110 mph wind, 15.00 ft mean hgt, ASCE 7-05, PART._ENC. bldg, not located within 6.50 ft from roof edge, CAT II, EXP B, wind TC DL=5.0 psf, wind BC DL=5.0 psf. Iw=1.00 GCpi(+/-)=0.55

Wind reactions based on MWFRS pressures.

In lieu of structural panels use purlins to brace all flat TC @ 24" OC.

Deflection meets L/240 live and L/180 total load.

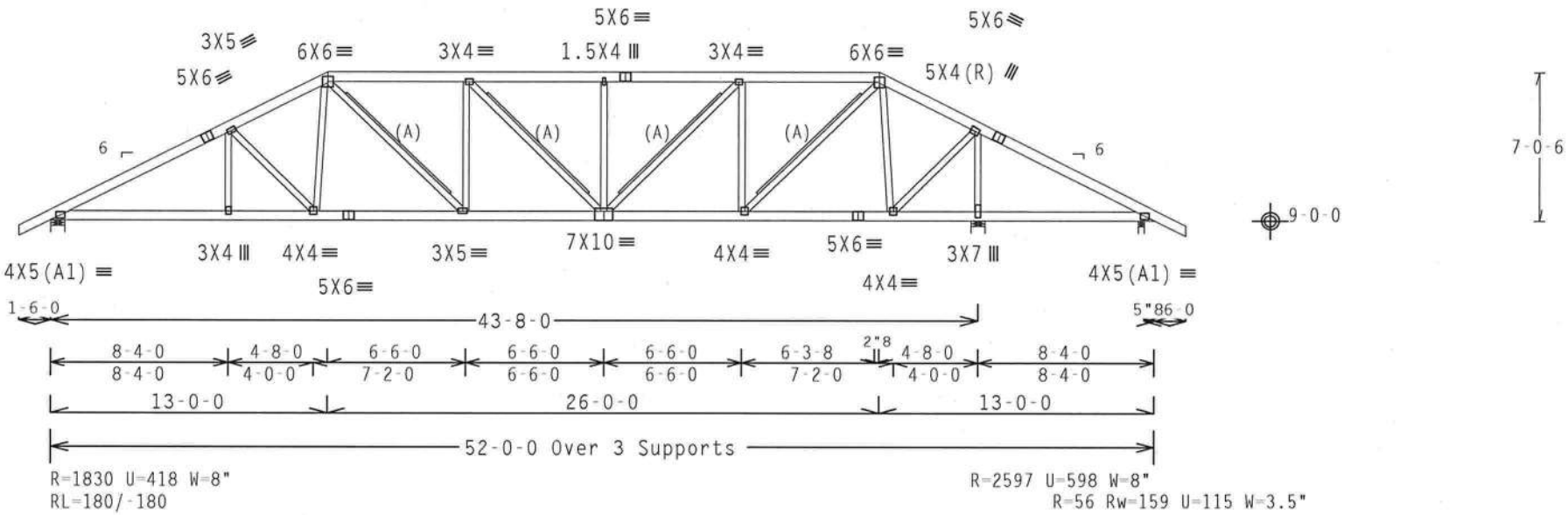

Design Crit: FBC2007Res/TPI-2002(STD)

PLT TYP. Wave | FT/RT=10%(0%)/0(0) | 8.07.00 | QTY:1 | FL/-/4/-/-/R/- | Scale =.125"/Ft.

ALPINE
ITW Building Components Group Inc.
Haines City, FL 33844
FL COA #0 278

WARNING TRUSSES REQUIRE EXTREME CARE IN FABRICATION, HANDLING, SHIPPING, INSTALLING AND BRACING. REFER TO BCSI (BUILDING COMPONENT SAFETY INFORMATION), PUBLISHED BY TPI (TRUSS PLATE INSTITUTE, 218 NORTH LEE STREET, SUITE 312, ALEXANDRIA, VA, 22314) AND WTCA (WOOD TRUSS COUNCIL OF AMERICA, 6300 ENTERPRISE LANE, MADISON, WI 53719) FOR SAFETY PRACTICES PRIOR TO PERFORMING THESE FUNCTIONS. UNLESS OTHERWISE INDICATED TOP CHORD SHALL HAVE PROPERLY ATTACHED STRUCTURAL PANELS AND BOTTOM CHORD SHALL HAVE A PROPERLY ATTACHED RIGID CEILING.

IMPORTANT FURNISH A COPY OF THIS DESIGN TO THE INSTALLATION CONTRACTOR. ITW BCG, INC. SHALL NOT BE RESPONSIBLE FOR ANY DEVIATION FROM THIS DESIGN; ANY FAILURE TO BUILD THE TRUSS IN CONFORMANCE WITH TPI; OR FABRICATING, HANDLING, SHIPPING, INSTALLING & BRACING OF TRUSSES.
DESIGN CONFORMS WITH APPLICABLE PROVISIONS OF NDS (NATIONAL DESIGN SPEC, BY AF&PA) AND TPI. ITW BCG CONNECTOR PLATES ARE MADE OF 20/18/16GA (W,H/SS/K) ASTM A653 GRADE 40/60 (W, K/H,SS) GALV. STEEL. APPLY PLATES TO EACH FACE OF TRUSS AND, UNLESS OTHERWISE LOCATED ON THIS DESIGN, POSITION PER DRAWINGS 160A-Z. ANY INSPECTION OF PLATES FOLLOWED BY (1) SHALL BE PER ANNEX A3 OF TPI1-2002 SEC.3. A SEAL ON THIS DRAWING INDICATES ACCEPTANCE OF PROFESSIONAL ENGINEERING RESPONSIBILITY SOLELY FOR THE TRUSS COMPONENT DESIGN SHOWN. THE SUITABILITY AND USE OF THIS COMPONENT FOR ANY BUILDING IS THE RESPONSIBILITY OF THE BUILDING DESIGNER PER ANSI/TPI 1 SEC. 2.

DOUGLAS FLEMING
LICENSE
No. 66648
STATE OF FLORIDA
PROFESSIONAL ENGINEER
19 '09

TC LL	20.0 PSF	REF	R8228- 25820
TC DL	10.0 PSF	DATE	03/19/09
BC DL	10.0 PSF	DRW	HCUSR8228 09078010
BC LL	0.0 PSF	HC-ENG	DF/DF
TOT.LD.	40.0 PSF	SEQN-	9426
DUR.FAC.	1.25	FROM	AH
SPACING	24.0"	JREF-	1TQ38228Z01

Top chord 2x6 SP #2
Bot chord 2x6 SP #2
Webs 2x4 SP #3

Roof overhang supports 2.00 psf soffit load.

(A) 2x4 #3 or better "T" brace. 80% length of web member. Attach with 16d Box or Gun (0.135"x3.5",min.)nails @ 6" OC.

Bottom chord checked for 10.00 psf non-concurrent live load.

WARNING: Furnish a copy of this DWG to the installation contractor. Special care must be taken during handling, shipping and installation of trusses. See "WARNING" note below.

110 mph wind, 15.00 ft mean hgt, ASCE 7-05, PART._ENC. bldg, not located within 6.50 ft from roof edge, CAT II, EXP B, wind TC DL=5.0 psf, wind BC DL=5.0 psf. Iw=1.00 GCpi(+/-)=0.55

Wind reactions based on MWFRS pressures.

In lieu of structural panels use purlins to brace all flat TC @ 24" OC.

Deflection meets L/240 live and L/180 total load.

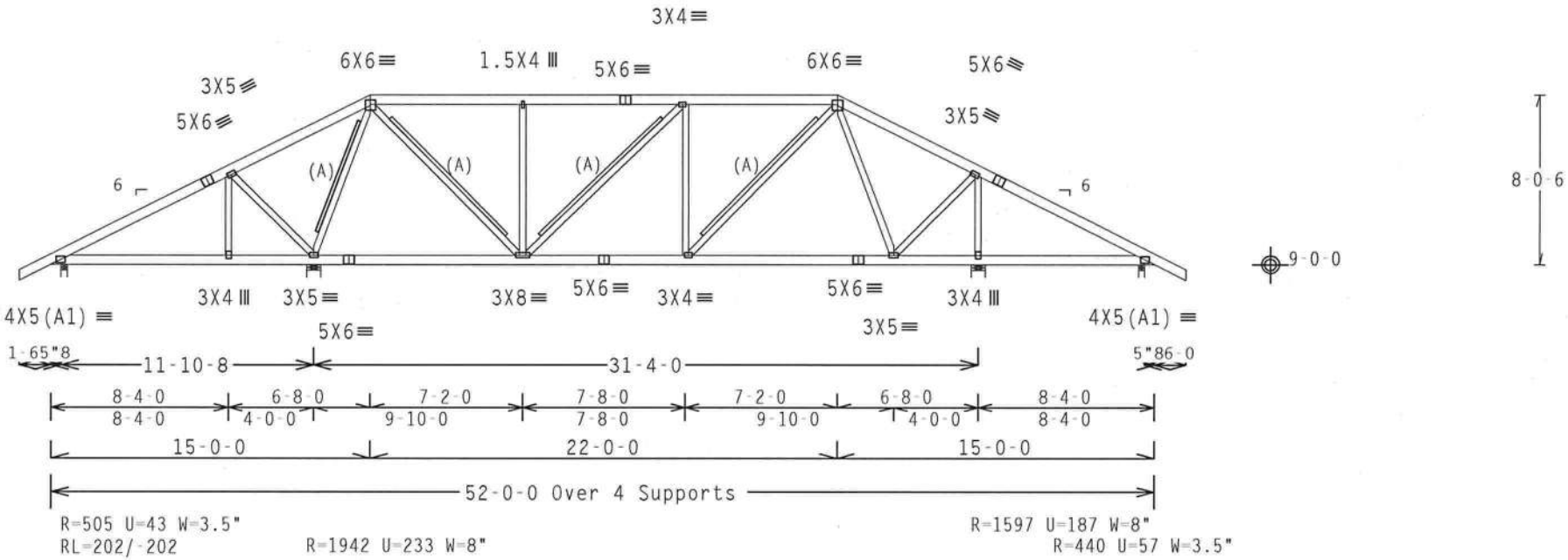

Design Crit: FBC2007Res/TPI-2002(STD)

PLT TYP. Wave FT/RT=10%(0%)/0(0) 8.07.0 QTY:1 FL/-/4/-/-/R/- Scale =.125"/Ft.

ALPINE
ITW Building Components Group Inc.
Haines City, FL 33844
FL COA #0 278

WARNING TRUSSES REQUIRE EXTREME CARE IN FABRICATION, HANDLING, SHIPPING, INSTALLING AND BRACING. REFER TO BCSI (BUILDING COMPONENT SAFETY INFORMATION), PUBLISHED BY TPI (TRUSS PLATE INSTITUTE, 218 NORTH LEE STREET, SUITE 312, ALEXANDRIA, VA. 22314) AND WTCA (WOOD TRUSS COUNCIL OF AMERICA, 6300 ENTERPRISE LANE, MADISON, WI 53719) FOR SAFETY PRACTICES PRIOR TO PERFORMING THESE FUNCTIONS. UNLESS OTHERWISE INDICATED TOP CHORD SHALL HAVE PROPERLY ATTACHED STRUCTURAL PANELS AND BOTTOM CHORD SHALL HAVE A PROPERLY ATTACHED RIGID CEILING.

IMPORTANT FURNISH A COPY OF THIS DESIGN TO THE INSTALLATION CONTRACTOR. ITW BCG, INC. SHALL NOT BE RESPONSIBLE FOR ANY DEVIATION FROM THIS DESIGN; ANY FAILURE TO BUILD THE TRUSS IN COMFORMANCE WITH TPI; OR FABRICATING, HANDLING, SHIPPING, INSTALLING & BRACING OF TRUSSES.
DESIGN CONFORMS WITH APPLICABLE PROVISIONS OF NDS (NATIONAL DESIGN SPEC. BY AF&PA) AND TPI. ITW BCG CONNECTOR PLATES ARE MADE OF 20/18/16GA (W,H/SS/K) ASTM A653 GRADE 40/60 (W, K/H,SS) GALV. STEEL. APPLY PLATES TO EACH FACE OF TRUSS AND, UNLESS OTHERWISE LOCATED ON THIS DESIGN, POSITION PER DRAWINGS 160A-Z. ANY INSPECTION OF PLATES FOLLOWED BY (1) SHALL BE PER ANNEX A3 OF TPI1-2002 SEC.3. A SEAL ON THIS DRAWING INDICATES ACCEPTANCE OF PROFESSIONAL ENGINEERING RESPONSIBILITY SOLELY FOR THE TRUSS COMPONENT DESIGN SHOWN. THE SUITABILITY AND USE OF THIS COMPONENT FOR ANY BUILDING IS THE RESPONSIBILITY OF THE BUILDING DESIGNER PER ANSI/TPI 1 SEC. 2.

DOUGLAS FLEMING LICENSE No. 66648 STATE OF FLORIDA PROFESSIONAL ENGINEER
Mar 19 '09

TC LL	20.0 PSF	REF	R8228- 25821
TC DL	10.0 PSF	DATE	03/19/09
BC DL	10.0 PSF	DRW	HCUSR8228 09078011
BC LL	0.0 PSF	HC-ENG	DF/DF
TOT.LD.	40.0 PSF	SEQN-	9443
DUR.FAC.	1.25	FROM	AH
SPACING	24.0"	JREF-	1TQ38228Z01

(9-070--Freeman Design Group Hudson -- , ** - H15AA)

Top chord 2x6 SP #2
Bot chord 2x6 SP #2
Webs 2x4 SP #3

Roof overhang supports 2.00 psf soffit load.

(B) 1x4 #3SRB SPF-S or better "T" brace. 80% length of web member. Attach with 8d Box or Gun (0.113"x2.5",min.)nails @ 6" OC.

In lieu of structural panels use purlins to brace all flat TC @ 24" OC.

WARNING: Furnish a copy of this DWG to the installation contractor. Special care must be taken during handling, shipping and installation of trusses. See "WARNING" note below.

110 mph wind, 15.00 ft mean hgt, ASCE 7-05, PART. ENC. bldg, not located within 6.50 ft from roof edge, CAT II, EXP B, wind TC DL=5.0 psf, wind BC DL=5.0 psf. Iw=1.00 GCpi(+/-)=0.55

Wind reactions based on MWFRS pressures.

(A) 2x4 #3 or better "T" brace. 80% length of web member. Attach with 16d Box or Gun (0.135"x3.5",min.)nails @ 6" OC.

Bottom chord checked for 10.00 psf non-concurrent live load.

Deflection meets L/240 live and L/180 total load.

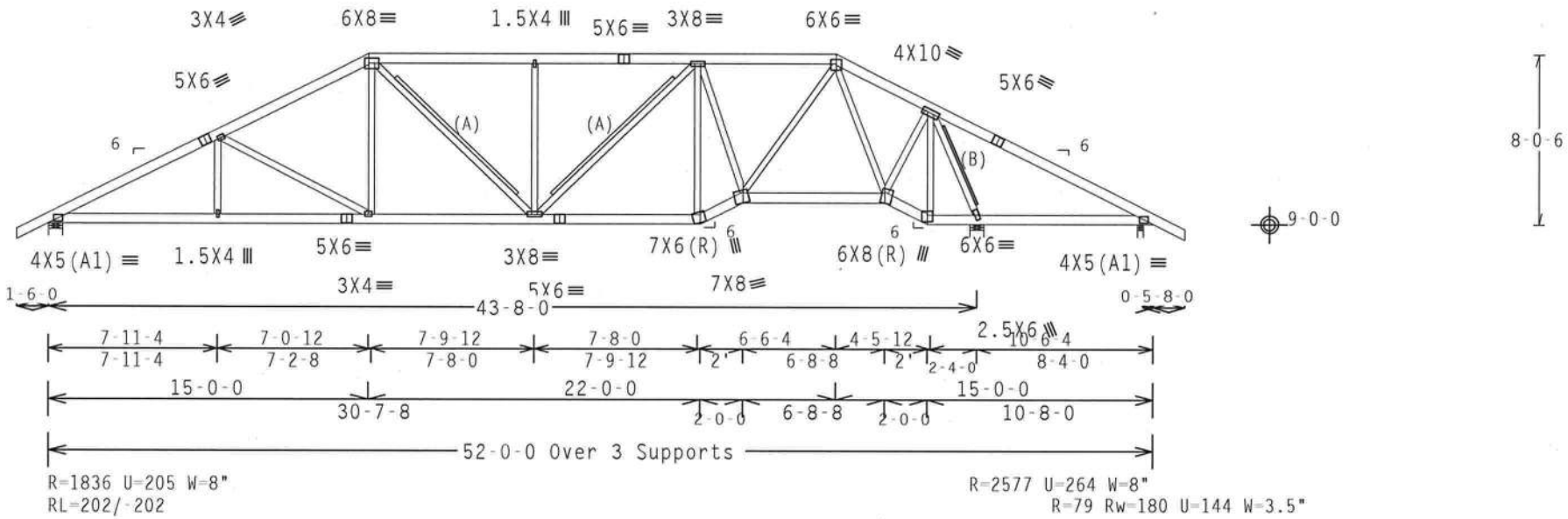

Design Crit: FBC2007Res/TPI-2002(STD)
FT/RT=10%(0%)/0(0)

PLT TYP. Wave | 8.07.00 | QTY:1 | FL/-/4/-/-/R/- | Scale =.125"/Ft.

ALPINE
ITW Building Components Group Inc.
Haines City, FL 33844
FL COA #0 278

WARNING TRUSSES REQUIRE EXTREME CARE IN FABRICATION, HANDLING, SHIPPING, INSTALLING AND BRACING. REFER TO BCSI (BUILDING COMPONENT SAFETY INFORMATION), PUBLISHED BY TPI (TRUSS PLATE INSTITUTE, 218 NORTH LEE STREET, SUITE 312, ALEXANDRIA, VA. 22314) AND WTCA (WOOD TRUSS COUNCIL OF AMERICA, 6300 ENTERPRISE LANE, MADISON, WI 53719) FOR SAFETY PRACTICES PRIOR TO PERFORMING THESE FUNCTIONS. UNLESS OTHERWISE INDICATED TOP CHORD SHALL HAVE PROPERLY ATTACHED STRUCTURAL PANELS AND BOTTOM CHORD SHALL HAVE A PROPERLY ATTACHED RIGID CEILING.

IMPORTANTFURNISH A COPY OF THIS DESIGN TO THE INSTALLATION CONTRACTOR. ITW BCG, INC. SHALL NOT BE RESPONSIBLE FOR ANY DEVIATION FROM THIS DESIGN; ANY FAILURE TO BUILD THE TRUSS IN CONFORMANCE WITH TPI; OR FABRICATING, HANDLING, SHIPPING, INSTALLING & BRACING OF TRUSSES.
DESIGN CONFORMS WITH APPLICABLE PROVISIONS OF NDS (NATIONAL DESIGN SPEC. BY AF&PA) AND TPI. ITW BCG CONNECTOR PLATES ARE MADE OF 20/18/16GA (W,H/SS/K) ASTM A653 GRADE 40/60 (H, K/H,SS) GALV. STEEL. APPLY PLATES TO EACH FACE OF TRUSS AND, UNLESS OTHERWISE LOCATED ON THIS DESIGN, POSITION PER DRAWINGS 16DA-Z. ANY INSPECTION OF PLATES FOLLOWED BY (1) SHALL BE PER ANNEX A3 OF TP11-2002 SEC.3. A SEAL ON THIS DRAWING INDICATES ACCEPTANCE OF PROFESSIONAL ENGINEERING RESPONSIBILITY SOLELY FOR THE TRUSS COMPONENT DESIGN SHOWN. THE SUITABILITY AND USE OF THIS COMPONENT FOR ANY BUILDING IS THE RESPONSIBILITY OF THE BUILDING DESIGNER PER ANSI/TPI 1 SEC. 2.

DOUGLAS FLEMING LICENSE No. 66648 STATE OF FLORIDA PROFESSIONAL ENGINEER
MAR 19 '09

TC LL	20.0 PSF	REF	R8228- 25822
TC DL	10.0 PSF	DATE	03/19/09
BC DL	10.0 PSF	DRW	HCUSR8228 09078012
BC LL	0.0 PSF	HC-ENG	DF/DF
TOT.LD.	40.0 PSF	SEQN-	9447
DUR.FAC.	1.25	FROM	AH
SPACING	24.0"	JREF-	1TQ38228Z01

Top chord 2x6 SP #2
Bot chord 2x6 SP #2
Webs 2x4 SP #3

Roof overhang supports 2.00 psf soffit load.

(B) 1x4 #3SRB SPF-S or better "T" brace. 80% length of web member. Attach with 8d Box or Gun (0.113"x2.5",min.)nails @ 6" OC.

(A) 2x6 #3 or better "T" brace. 80% length of web member. Attach with 16d Box or Gun (0.135"x3.5",min.)nails @ 6" OC.

Bottom chord checked for 10.00 psf non-concurrent live load.

WARNING: Furnish a copy of this DWG to the installation contractor. Special care must be taken during handling, shipping and installation of trusses. See "WARNING" note below.

110 mph wind, 15.00 ft mean hgt, ASCE 7-05, PART._ENC. bldg, not located within 6.50 ft from roof edge, CAT II, EXP B, wind TC DL=5.0 psf, wind BC DL=5.0 psf. Iw=1.00 GCpi(+/-)=0.55

Wind reactions based on MWFRS pressures.

(C) 2x4 #3 or better "T" brace. 80% length of web member. Attach with 16d Box or Gun (0.135"x3.5",min.)nails @ 6" OC.

In lieu of structural panels use purlins to brace all flat TC @ 24" OC.

Deflection meets L/240 live and L/180 total load.

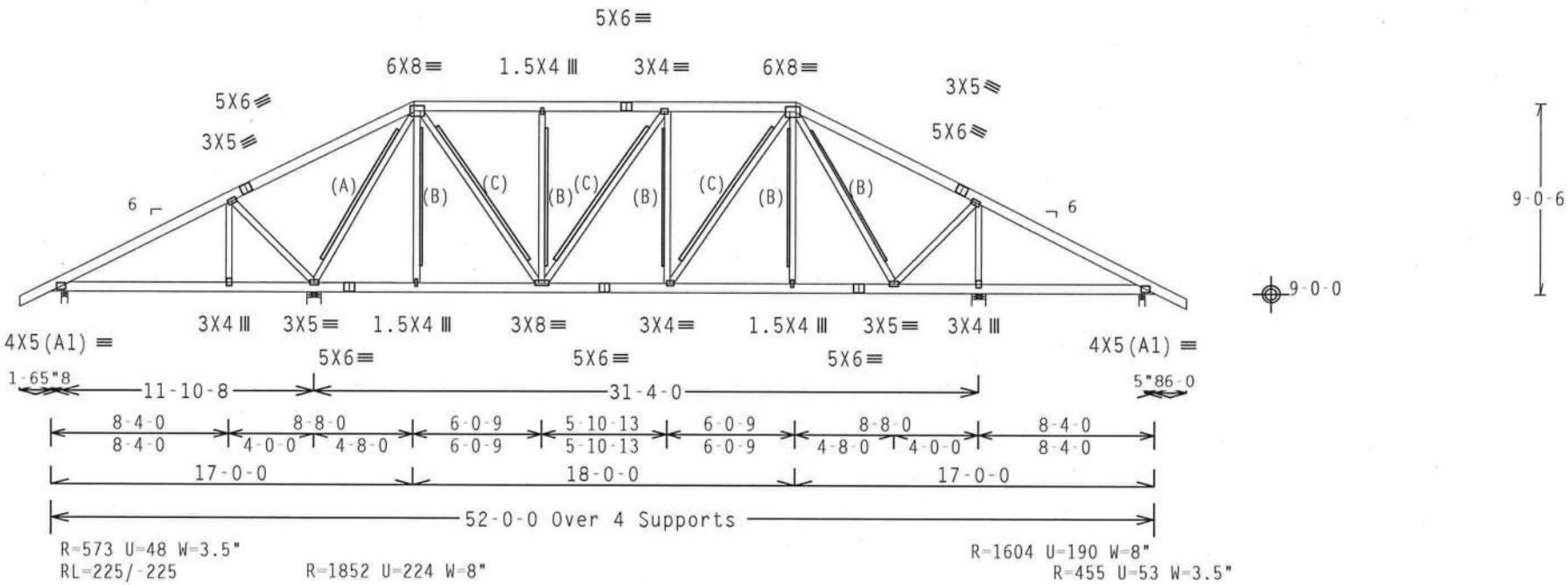

Design Crit: FBC2007Res/TPI-2002(STD)

PLT TYP. Wave | FT/RT=10%(0%)/0(0) | 8.07.00 | QTY:1 | FL/-/4/-/-/R/- | Scale =.125"/Ft.

ALPINE
ITW Building Components Group Inc.
Haines City, FL 33844
FL COA #0 278

WARNING TRUSSES REQUIRE EXTREME CARE IN FABRICATION, HANDLING, SHIPPING, INSTALLING AND BRACING. REFER TO BCSI (BUILDING COMPONENT SAFETY INFORMATION), PUBLISHED BY TPI (TRUSS PLATE INSTITUTE, 218 NORTH LEE STREET, SUITE 312, ALEXANDRIA, VA, 22314) AND WTCA (WOOD TRUSS COUNCIL OF AMERICA, 6300 ENTERPRISE LANE, MADISON, WI 53719) FOR SAFETY PRACTICES PRIOR TO PERFORMING THESE FUNCTIONS. UNLESS OTHERWISE INDICATED TOP CHORD SHALL HAVE PROPERLY ATTACHED STRUCTURAL PANELS AND BOTTOM CHORD SHALL HAVE A PROPERLY ATTACHED RIGID CEILING.

IMPORTANT FURNISH A COPY OF THIS DESIGN TO THE INSTALLATION CONTRACTOR. ITW BCG, INC. SHALL NOT BE RESPONSIBLE FOR ANY DEVIATION FROM THIS DESIGN; ANY FAILURE TO BUILD THE TRUSS IN COMFORMANCE WITH TPI; OR FABRICATING, HANDLING, SHIPPING, INSTALLING & BRACING OF TRUSSES.
DESIGN CONFORMS WITH APPLICABLE PROVISIONS OF NDS (NATIONAL DESIGN SPEC. BY AF&PA) AND TPI. ITW BCG CONNECTOR PLATES ARE MADE OF 20/18/16GA (W,H/SS/K) ASTM A653 GRADE 40/60 (W, K/H,SS) GALV. STEEL. APPLY PLATES TO EACH FACE OF TRUSS AND, UNLESS OTHERWISE LOCATED ON THIS DESIGN, POSITION PER DRAWINGS 160A-Z. ANY INSPECTION OF PLATES FOLLOWED BY (1) SHALL BE PER ANNEX A3 OF TPI1-2002 SEC.3. A SEAL ON THIS DRAWING INDICATES ACCEPTANCE OF PROFESSIONAL ENGINEERING RESPONSIBILITY SOLELY FOR THE TRUSS COMPONENT DESIGN SHOWN. THE SUITABILITY AND USE OF THIS COMPONENT FOR ANY BUILDING IS THE RESPONSIBILITY OF THE BUILDING DESIGNER PER ANSI/TPI 1 SEC. 2.

DOUGLAS FLEMING LICENSE No. 66648 STATE OF FLORIDA PROFESSIONAL ENGINEER
19 '09

TC LL	20.0 PSF	REF	R8228- 25823
TC DL	10.0 PSF	DATE	03/19/09
BC DL	10.0 PSF	DRW	HCUSR8228 09078013
BC LL	0.0 PSF	HC-ENG	DF/DF
TOT.LD.	40.0 PSF	SEQN-	9454
DUR.FAC.	1.25	FROM	AH
SPACING	24.0"	JREF-	1TQ38228Z01

Top chord 2x6 SP #2
Bot chord 2x6 SP #2
Webs 2x4 SP #3

Roof overhang supports 2.00 psf soffit load.

(A) 1x4 #3SRB SPF-S or better "T" brace. 80% length of web member. Attach with 8d Box or Gun (0.113"x2.5",min.)nails @ 6" OC.

In lieu of structural panels use purlins to brace all flat TC @ 24" OC.

WARNING: Furnish a copy of this DWG to the installation contractor. Special care must be taken during handling, shipping and installation of trusses. See "WARNING" note below.

110 mph wind, 15.00 ft mean hgt, ASCE 7-05, PART._ENC. bldg, not located within 6.50 ft from roof edge, CAT II, EXP B, wind TC DL=5.0 psf, wind BC DL=5.0 psf. Iw=1.00 GCpi(+/-)=0.55

Wind reactions based on MWFRS pressures.

(B) 2x6 #3 or better "T" brace. 80% length of web member. Attach with 16d Box or Gun (0.135"x3.5",min.)nails @ 6" OC.

Bottom chord checked for 10.00 psf non-concurrent live load.

Deflection meets L/240 live and L/180 total load.

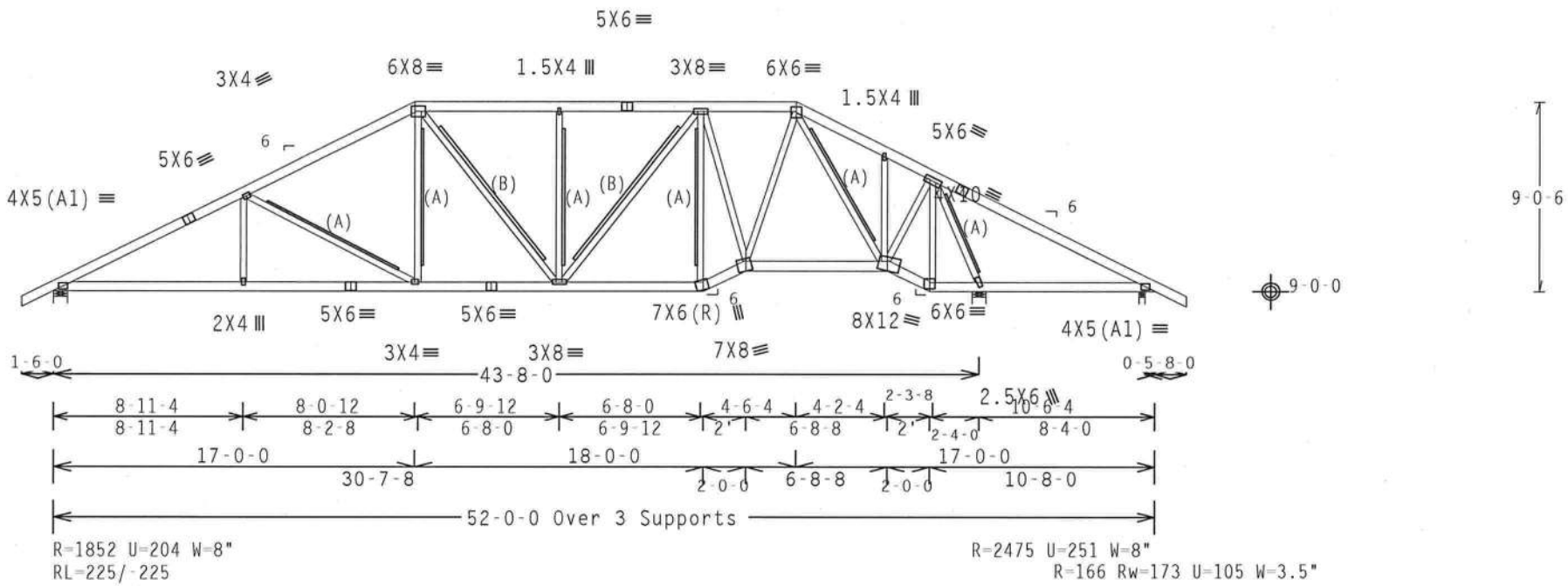

Design Crit: FBC2007Res/TPI-2002(STD)

PLT TYP. Wave | FT/RT=10%(0%)/0(0) | 8.07.0 | QTY:1 | FL/-/4/-/-/R/- | Scale =.125"/Ft.

ALPINE
ITW Building Components Group Inc.
Haines City, FL 33844
FL COA #0 278

WARNING TRUSSES REQUIRE EXTREME CARE IN FABRICATION, HANDLING, SHIPPING, INSTALLING AND BRACING. REFER TO BCSI (BUILDING COMPONENT SAFETY INFORMATION), PUBLISHED BY TPI (TRUSS PLATE INSTITUTE, 218 NORTH LEE STREET, SUITE 312, ALEXANDRIA, VA, 22314) AND WTCA (WOOD TRUSS COUNCIL OF AMERICA, 6300 ENTERPRISE LANE, MADISON, WI 53719) FOR SAFETY PRACTICES PRIOR TO PERFORMING THESE FUNCTIONS. UNLESS OTHERWISE INDICATED TOP CHORD SHALL HAVE PROPERLY ATTACHED STRUCTURAL PANELS AND BOTTOM CHORD SHALL HAVE A PROPERLY ATTACHED RIGID CEILING.

IMPORTANT FURNISH A COPY OF THIS DESIGN TO THE INSTALLATION CONTRACTOR. ITW BCG, INC. SHALL NOT BE RESPONSIBLE FOR ANY DEVIATION FROM THIS DESIGN; ANY FAILURE TO BUILD THE TRUSS IN COMFORMANCE WITH TPI; OR FABRICATING, HANDLING, SHIPPING, INSTALLING & BRACING OF TRUSSES.
DESIGN CONFORMS WITH APPLICABLE PROVISIONS OF NDS (NATIONAL DESIGN SPEC, BY AF&PA) AND TPI. ITW BCG CONNECTOR PLATES ARE MADE OF 20/18/16GA (W,H/SS/K) ASTM A653 GRADE 40/60 (W, K/H,SS) GALV. STEEL. APPLY PLATES TO EACH FACE OF TRUSS AND, UNLESS OTHERWISE LOCATED ON THIS DESIGN, POSITION PER DRAWINGS 160A-Z. ANY INSPECTION OF PLATES FOLLOWED BY (1) SHALL BE PER ANNEX A3 OF TPI1-2002 SEC.3. A SEAL ON THIS DRAWING INDICATES ACCEPTANCE OF PROFESSIONAL ENGINEERING RESPONSIBILITY SOLELY FOR THE TRUSS COMPONENT DESIGN SHOWN. THE SUITABILITY AND USE OF THIS COMPONENT FOR ANY BUILDING IS THE RESPONSIBILITY OF THE BUILDING DESIGNER PER ANSI/TPI 1 SEC. 2.

DOUGLAS FLEMING LICENSE No. 66648 STATE OF FLORIDA PROFESSIONAL ENGINEER
Mar 19 '09

TC LL	20.0 PSF	REF	R8228- 25824
TC DL	10.0 PSF	DATE	03/19/09
BC DL	10.0 PSF	DRW	HCUSR8228 09078014
BC LL	0.0 PSF	HC-ENG	DF/DF
TOT.LD.	40.0 PSF	SEQN-	9459
DUR.FAC.	1.25	FROM	AH
SPACING	24.0"	JREF-	1TQ38228Z01

Top chord 2x6 SP #2
Bot chord 2x6 SP #2
Webs 2x4 SP #3

Roof overhang supports 2.00 psf soffit load.

(A) 1x4 #3SRB SPF-S or better "T" brace. 80% length of web member. Attach with 8d Box or Gun (0.113"x2.5",min.)nails @ 6" OC.

In lieu of structural panels use purlins to brace all flat TC @ 24" OC.

WARNING: Furnish a copy of this DWG to the installation contractor. Special care must be taken during handling, shipping and installation of trusses. See "WARNING" note below.

110 mph wind, 15.00 ft mean hgt, ASCE 7-05, PART._ENC. bldg, not located within 6.50 ft from roof edge, CAT II, EXP B, wind TC DL=5.0 psf, wind BC DL=5.0 psf. Iw=1.00 GCpi(+/-)=0.55

Wind reactions based on MWFRS pressures.

(B) 2x6 #3 or better "T" brace. 80% length of web member. Attach with 16d Box or Gun (0.135"x3.5",min.)nails @ 6" OC.

Bottom chord checked for 10.00 psf non-concurrent live load.

Deflection meets L/240 live and L/180 total load.

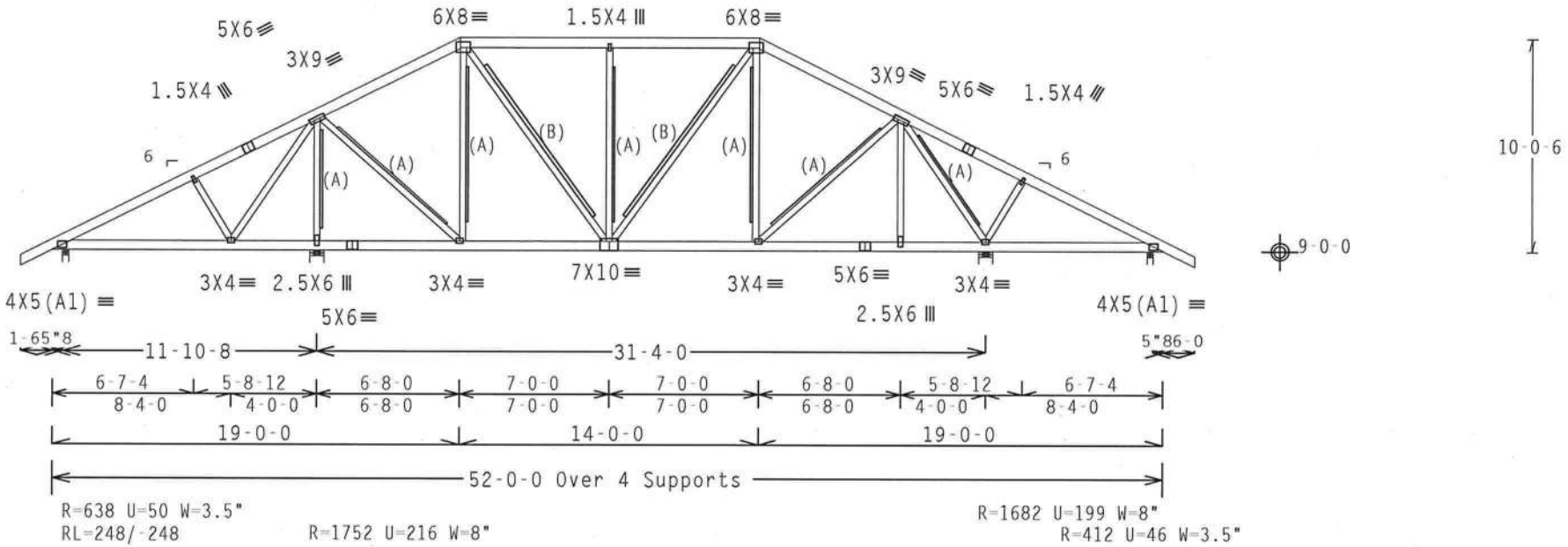

Design Crit: FBC2007Res/TPI-2002(STD)

PLT TYP. Wave — FT/RT=10%(0%)/0(0) — 8.07.00 — QTY:1 — FL/-/4/-/-/R/- — Scale =.125"/Ft.

ALPINE
ITW Building Components Group Inc.
Haines City, FL 33844
FL COA #0 278

WARNING TRUSSES REQUIRE EXTREME CARE IN FABRICATION, HANDLING, SHIPPING, INSTALLING AND BRACING. REFER TO BCSI (BUILDING COMPONENT SAFETY INFORMATION), PUBLISHED BY TPI (TRUSS PLATE INSTITUTE, 218 NORTH LEE STREET, SUITE 312, ALEXANDRIA, VA. 22314) AND WTCA (WOOD TRUSS COUNCIL OF AMERICA, 6300 ENTERPRISE LANE, MADISON, WI 53719) FOR SAFETY PRACTICES PRIOR TO PERFORMING THESE FUNCTIONS. UNLESS OTHERWISE INDICATED TOP CHORD SHALL HAVE PROPERLY ATTACHED STRUCTURAL PANELS AND BOTTOM CHORD SHALL HAVE A PROPERLY ATTACHED RIGID CEILING.

IMPORTANT FURNISH A COPY OF THIS DESIGN TO THE INSTALLATION CONTRACTOR. ITW BCG, INC. SHALL NOT BE RESPONSIBLE FOR ANY DEVIATION FROM THIS DESIGN; ANY FAILURE TO BUILD THE TRUSS IN CONFORMANCE WITH TPI; OR FABRICATING, HANDLING, SHIPPING, INSTALLING & BRACING OF TRUSSES.
DESIGN CONFORMS WITH APPLICABLE PROVISIONS OF NDS (NATIONAL DESIGN SPEC. BY AF&PA) AND TPI. ITW BCG CONNECTOR PLATES ARE MADE OF 20/18/16GA (W,H/SS/K) ASTM A653 GRADE 40/60 (W, K/H,SS) GALV. STEEL. APPLY PLATES TO EACH FACE OF TRUSS AND, UNLESS OTHERWISE LOCATED ON THIS DESIGN, POSITION PER DRAWINGS 160A-Z. ANY INSPECTION OF PLATES FOLLOWED BY (I) SHALL BE PER ANNEX A3 OF TPI1-2002 SEC.3. A SEAL ON THIS DRAWING INDICATES ACCEPTANCE OF PROFESSIONAL ENGINEERING RESPONSIBILITY SOLELY FOR THE TRUSS COMPONENT DESIGN SHOWN. THE SUITABILITY AND USE OF THIS COMPONENT FOR ANY BUILDING IS THE RESPONSIBILITY OF THE BUILDING DESIGNER PER ANSI/TPI 1 SEC. 2.

DOUGLAS FLEMING LICENSE No. 66648 STATE OF FLORIDA PROFESSIONAL ENGINEER
19 '09

TC LL	20.0 PSF	REF	R8228- 25825
TC DL	10.0 PSF	DATE	03/19/09
BC DL	10.0 PSF	DRW	HCUSR8228 09078015
BC LL	0.0 PSF	HC-ENG	DF/DF
TOT.LD.	40.0 PSF	SEQN-	9466
DUR.FAC.	1.25	FROM	AH
SPACING	24.0"	JREF-	1TQ38228Z01

(9-070--Freeman Design Group Hudson -- , ** - H19AA)

Top chord 2x6 SP #2
Bot chord 2x6 SP #2
Webs 2x4 SP #3

Roof overhang supports 2.00 psf soffit load.

(A) 1x4 #3SRB SPF-S or better "T" brace. 80% length of web member. Attach with 8d Box or Gun (0.113"x2.5",min.)nails @ 6" OC.

In lieu of structural panels use purlins to brace all flat TC @ 24" OC.

WARNING: Furnish a copy of this DWG to the installation contractor. Special care must be taken during handling, shipping and installation of trusses. See "WARNING" note below.

110 mph wind, 15.00 ft mean hgt, ASCE 7-05, PART. ENC. bldg, not located within 6.50 ft from roof edge, CAT II, EXP B, wind TC DL=5.0 psf, wind BC DL=5.0 psf. Iw=1.00 GCpi(+/-)=0.55

Wind reactions based on MWFRS pressures.

(B) 2x6 #3 or better "T" brace. 80% length of web member. Attach with 16d Box or Gun (0.135"x3.5",min.)nails @ 6" OC.

Bottom chord checked for 10.00 psf non-concurrent live load.

Deflection meets L/240 live and L/180 total load.

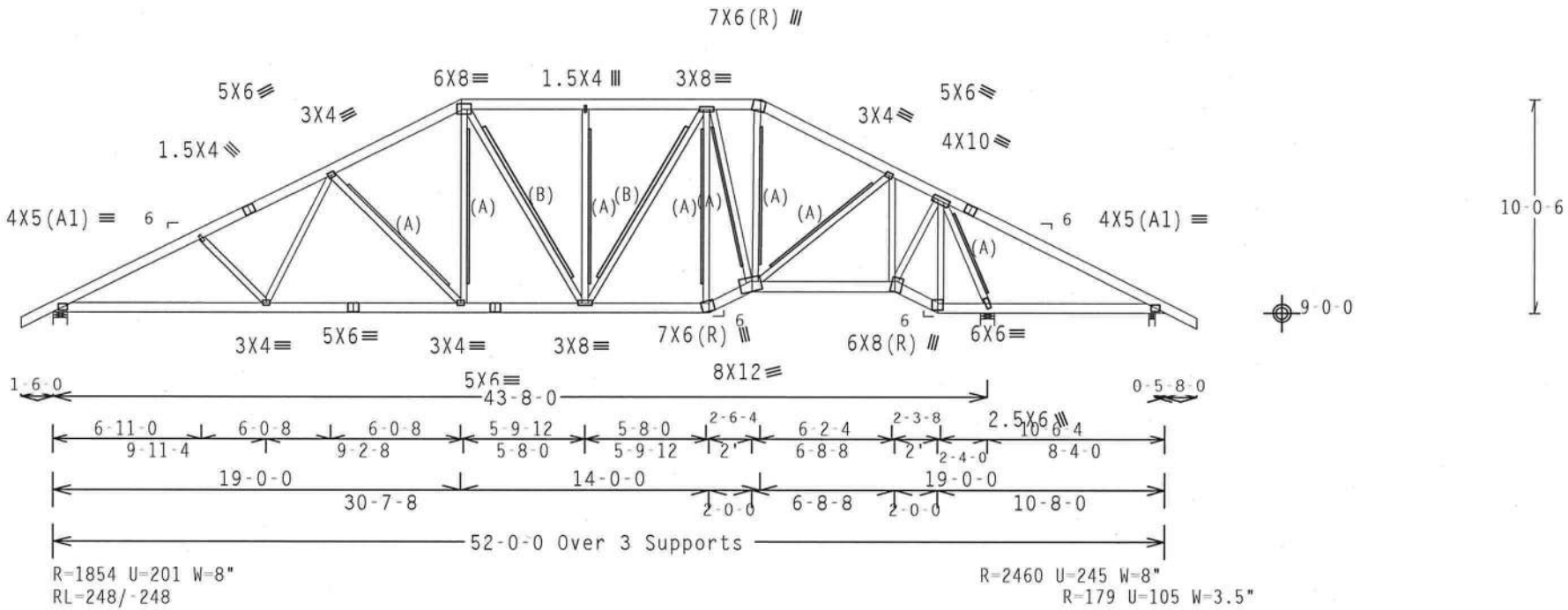

Design Crit: FBC2007Res/TPI-2002(STD)

PLT TYP. Wave | FT/RT=10%(0%)/0(0) | 8.07.00 | QTY:1 | FL/-/4/-/-/R/- | Scale =.125"/Ft.

ALPINE
ITW Building Components Group Inc.
Haines City, FL 33844
FL COA #0 278

WARNING TRUSSES REQUIRE EXTREME CARE IN FABRICATION, HANDLING, SHIPPING, INSTALLING AND BRACING. REFER TO BCSI (BUILDING COMPONENT SAFETY INFORMATION), PUBLISHED BY TPI (TRUSS PLATE INSTITUTE, 218 NORTH LEE STREET, SUITE 312, ALEXANDRIA, VA, 22314) AND WTCA (WOOD TRUSS COUNCIL OF AMERICA, 6300 ENTERPRISE LANE, MADISON, WI 53719) FOR SAFETY PRACTICES PRIOR TO PERFORMING THESE FUNCTIONS. UNLESS OTHERWISE INDICATED TOP CHORD SHALL HAVE PROPERLY ATTACHED STRUCTURAL PANELS AND BOTTOM CHORD SHALL HAVE A PROPERLY ATTACHED RIGID CEILING.

IMPORTANT FURNISH A COPY OF THIS DESIGN TO THE INSTALLATION CONTRACTOR. ITW BCG, INC. SHALL NOT BE RESPONSIBLE FOR ANY DEVIATION FROM THIS DESIGN; ANY FAILURE TO BUILD THE TRUSS IN COMFORMANCE WITH TPI; OR FABRICATING, HANDLING, SHIPPING, INSTALLING & BRACING OF TRUSSES. DESIGN CONFORMS WITH APPLICABLE PROVISIONS OF NDS (NATIONAL DESIGN SPEC, BY AF&PA) AND TPI. ITW BCG CONNECTOR PLATES ARE MADE OF 20/18/16GA (W,H/SS/K) ASTM A653 GRADE 40/60 (W, K/H,SS) GALV. STEEL. APPLY PLATES TO EACH FACE OF TRUSS AND. UNLESS OTHERWISE LOCATED ON THIS DESIGN, POSITION PER DRAWINGS 160A-Z. ANY INSPECTION OF PLATES FOLLOWED BY (1) SHALL BE PER ANNEX A3 OF TPI1-2002 SEC.3. A SEAL ON THIS DRAWING INDICATES ACCEPTANCE OF PROFESSIONAL ENGINEERING RESPONSIBILITY SOLELY FOR THE TRUSS COMPONENT DESIGN SHOWN. THE SUITABILITY AND USE OF THIS COMPONENT FOR ANY BUILDING IS THE RESPONSIBILITY OF THE BUILDING DESIGNER PER ANSI/TPI 1 SEC. 2.

DOUGLAS FLEMING LICENSE No. 66648 STATE OF FLORIDA PROFESSIONAL ENGINEER

TC LL	20.0 PSF	REF	R8228- 25826
TC DL	10.0 PSF	DATE	03/19/09
BC DL	10.0 PSF	DRW	HCUSR8228 09078016
BC LL	0.0 PSF	HC-ENG	DF/DF
TOT.LD.	40.0 PSF	SEQN-	9476
DUR.FAC.	1.25	FROM	AH
SPACING	24.0"	JREF-	1TQ38228Z01

Top chord 2x6 SP #2
Bot chord 2x6 SP #2
Webs 2x4 SP #3

Roof overhang supports 2.00 psf soffit load.

(A) Continuous lateral bracing equally spaced on member.

Truss passed check for 20 psf additional bottom chord live load in areas with 42"-high x 24"-wide clearance.

Deflection meets L/240 live and L/180 total load.

110 mph wind, 15.00 ft mean hgt, ASCE 7-05, PART._ENC. bldg, not located within 6.50 ft from roof edge, CAT II, EXP B, wind TC DL=5.0 psf, wind BC DL=5.0 psf. Iw=1.00 GCpi(+/-)=0.55

Wind reactions based on MWFRS pressures.

In lieu of structural panels use purlins to brace all flat TC @ 24" OC.

Bottom chord checked for 10.00 psf non-concurrent live load.

WARNING: Furnish a copy of this DWG to the installation contractor. Special care must be taken during handling, shipping and installation of trusses. See "WARNING" note below.

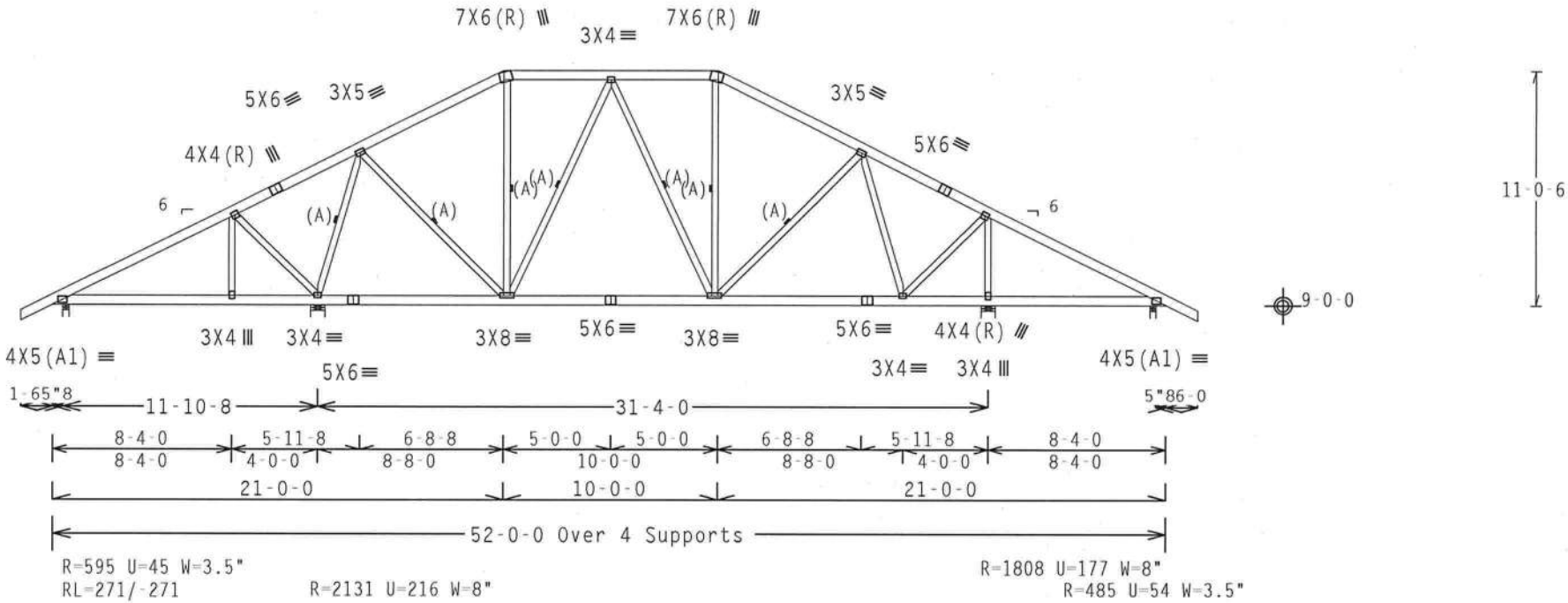

Design Crit: FBC2007Res/TPI-2002(STD)

PLT TYP. Wave | FT/RT=10%(0%)/0(0) | 8.07.00 | QTY:6 | FL/-/4/-/-/R/- | Scale =.125"/Ft.

ALPINE
ITW Building Components Group Inc.
Haines City, FL 33844
FL COA #0 278

WARNING TRUSSES REQUIRE EXTREME CARE IN FABRICATION, HANDLING, SHIPPING, INSTALLING AND BRACING. REFER TO BCSI (BUILDING COMPONENT SAFETY INFORMATION), PUBLISHED BY TPI (TRUSS PLATE INSTITUTE, 218 NORTH LEE STREET, SUITE 312, ALEXANDRIA, VA, 22314) AND WTCA (WOOD TRUSS COUNCIL OF AMERICA, 6300 ENTERPRISE LANE, MADISON, WI 53719) FOR SAFETY PRACTICES PRIOR TO PERFORMING THESE FUNCTIONS. UNLESS OTHERWISE INDICATED TOP CHORD SHALL HAVE PROPERLY ATTACHED STRUCTURAL PANELS AND BOTTOM CHORD SHALL HAVE A PROPERLY ATTACHED RIGID CEILING.

IMPORTANT FURNISH A COPY OF THIS DESIGN TO THE INSTALLATION CONTRACTOR. ITW BCG, INC. SHALL NOT BE RESPONSIBLE FOR ANY DEVIATION FROM THIS DESIGN; ANY FAILURE TO BUILD THE TRUSS IN COMFORMANCE WITH TPI; OR FABRICATING, HANDLING, SHIPPING, INSTALLING & BRACING OF TRUSSES. DESIGN CONFORMS WITH APPLICABLE PROVISIONS OF NDS (NATIONAL DESIGN SPEC. BY AF&PA) AND TPI. ITW BCG CONNECTOR PLATES ARE MADE OF 20/18/16GA (W,H/SS/K) ASTM A653 GRADE 40/60 (W, K/H,SS) GALV. STEEL. APPLY PLATES TO EACH FACE OF TRUSS AND, UNLESS OTHERWISE LOCATED ON THIS DESIGN, POSITION PER DRAWINGS 160A-Z. ANY INSPECTION OF PLATES FOLLOWED BY (1) SHALL BE PER ANNEX A3 OF TPI1-2007 SEC.3. A SEAL ON THIS DRAWING INDICATES ACCEPTANCE OF PROFESSIONAL ENGINEERING RESPONSIBILITY SOLELY FOR THE TRUSS COMPONENT DESIGN SHOWN. THE SUITABILITY AND USE OF THIS COMPONENT FOR ANY BUILDING IS THE RESPONSIBILITY OF THE BUILDING DESIGNER PER ANSI/TPI 1 SEC. 2.

DOUGLAS FLEMING LICENSE No. 66648 STATE OF FLORIDA PROFESSIONAL ENGINEER
Mar 19 '09

TC LL	20.0 PSF	REF	R8228- 25827
TC DL	10.0 PSF	DATE	03/19/09
BC DL	10.0 PSF	DRW	HCUSR8228 09078017
BC LL	0.0 PSF	HC-ENG	DF/DF
TOT.LD.	40.0 PSF	SEQN-	9487
DUR.FAC.	1.25	FROM	AH
SPACING	24.0"	JREF-	1TQ38228Z01

Top chord 2x6 SP #2
Bot chord 2x6 SP #2
Webs 2x4 SP #3

Roof overhang supports 2.00 psf soffit load.

(A) Continuous lateral bracing equally spaced on member.

Truss passed check for 20 psf additional bottom chord live load in areas with 42"-high x 24"-wide clearance.

Deflection meets L/240 live and L/180 total load.

110 mph wind, 15.00 ft mean hgt, ASCE 7-05, PART. ENC. bldg, not located within 6.50 ft from roof edge, CAT II, EXP B, wind TC DL=5.0 psf, wind BC DL=5.0 psf. Iw=1.00 GCpi(+/-)=0.55

Wind reactions based on MWFRS pressures.

In lieu of structural panels use purlins to brace all flat TC @ 24" OC.

Bottom chord checked for 10.00 psf non-concurrent live load.

WARNING: Furnish a copy of this DWG to the installation contractor. Special care must be taken during handling, shipping and installation of trusses. See "WARNING" note below.

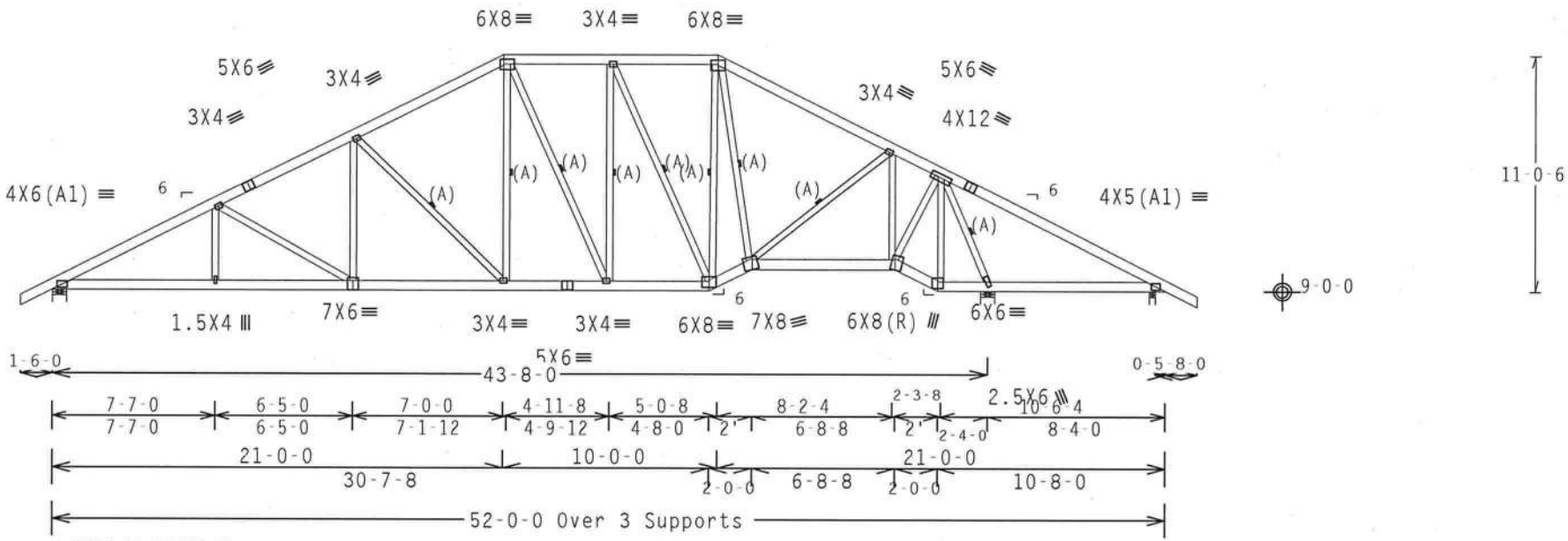

Design Crit: FBC2007Res/TPI-2002(STD)

PLT TYP. Wave | FT/RT=10%(0%)/0(0) | 8.07.00 | QTY:3 | FL/-/4/-/-/R/- | Scale =.125"/Ft.

ALPINE
ITW Building Components Group Inc.
Haines City, FL 33844
FL COA #0 278

WARNING TRUSSES REQUIRE EXTREME CARE IN FABRICATION, HANDLING, SHIPPING, INSTALLING AND BRACING. REFER TO BCSI (BUILDING COMPONENT SAFETY INFORMATION), PUBLISHED BY TPI (TRUSS PLATE INSTITUTE, 218 NORTH LEE STREET, SUITE 312, ALEXANDRIA, VA, 22314) AND WTCA (WOOD TRUSS COUNCIL OF AMERICA, 6300 ENTERPRISE LANE, MADISON, WI 53719) FOR SAFETY PRACTICES PRIOR TO PERFORMING THESE FUNCTIONS. UNLESS OTHERWISE INDICATED TOP CHORD SHALL HAVE PROPERLY ATTACHED STRUCTURAL PANELS AND BOTTOM CHORD SHALL HAVE A PROPERLY ATTACHED RIGID CEILING.

IMPORTANT FURNISH A COPY OF THIS DESIGN TO THE INSTALLATION CONTRACTOR. ITW BCG, INC. SHALL NOT BE RESPONSIBLE FOR ANY DEVIATION FROM THIS DESIGN; ANY FAILURE TO BUILD THE TRUSS IN COMFORMANCE WITH TPI; OR FABRICATING, HANDLING, SHIPPING, INSTALLING & BRACING OF TRUSSES.
DESIGN CONFORMS WITH APPLICABLE PROVISIONS OF NDS (NATIONAL DESIGN SPEC. BY AF&PA) AND TPI. ITW BCG CONNECTOR PLATES ARE MADE OF 20/18/16GA (W,H/SS/K) ASTM A653 GRADE 40/60 (W, K/H,SS) GALV. STEEL. APPLY PLATES TO EACH FACE OF TRUSS AND, UNLESS OTHERWISE LOCATED ON THIS DESIGN, POSITION PER DRAWINGS 160A-Z. ANY INSPECTION OF PLATES FOLLOWED BY (i) SHALL BE PER ANNEX A3 OF TPI1-2002 SEC.3. A SEAL ON THIS DRAWING INDICATES ACCEPTANCE OF PROFESSIONAL ENGINEERING RESPONSIBILITY SOLELY FOR THE TRUSS COMPONENT DESIGN SHOWN. THE SUITABILITY AND USE OF THIS COMPONENT FOR ANY BUILDING IS THE RESPONSIBILITY OF THE BUILDING DESIGNER PER ANSI/TPI 1 SEC. 2.

DOUGLAS FLEMING LICENSE No. 66648 STATE OF FLORIDA PROFESSIONAL ENGINEER
19 '09

TC LL	20.0 PSF	REF	R8228- 25828
TC DL	10.0 PSF	DATE	03/19/09
BC DL	10.0 PSF	DRW	HCUSR8228 09078018
BC LL	0.0 PSF	HC-ENG	DF/DF
TOT.LD.	40.0 PSF	SEQN-	9508
DUR.FAC.	1.25	FROM	AH
SPACING	24.0"	JREF-	1TQ38228Z01

(9-070--Freeman Design Group Hudson -- , ** - A1)

Top chord 2x6 SP #2
Bot chord 2x6 SP #2
Webs 2x4 SP #3

Roof overhang supports 2.00 psf soffit load.

(B) 2x4 #3 or better "T" brace. 80% length of web member. Attach with 16d Box or Gun (0.135"x3.5",min.)nails @ 6" OC.

In lieu of structural panels use purlins to brace all flat TC @ 24" OC.

WARNING: Furnish a copy of this DWG to the installation contractor. Special care must be taken during handling, shipping and installation of trusses. See "WARNING" note below.

110 mph wind, 15.00 ft mean hgt, ASCE 7-05, PART._ENC. bldg, not located within 6.50 ft from roof edge, CAT II, EXP B, wind TC DL=5.0 psf, wind BC DL=5.0 psf. Iw=1.00 GCpi(+/-)=0.55

Wind reactions based on MWFRS pressures.

(A) 2x6 #3 or better "T" brace. 80% length of web member. Attach with 16d Box or Gun (0.135"x3.5",min.)nails @ 6" OC.

Bottom chord checked for 10.00 psf non-concurrent live load.

Deflection meets L/240 live and L/180 total load.

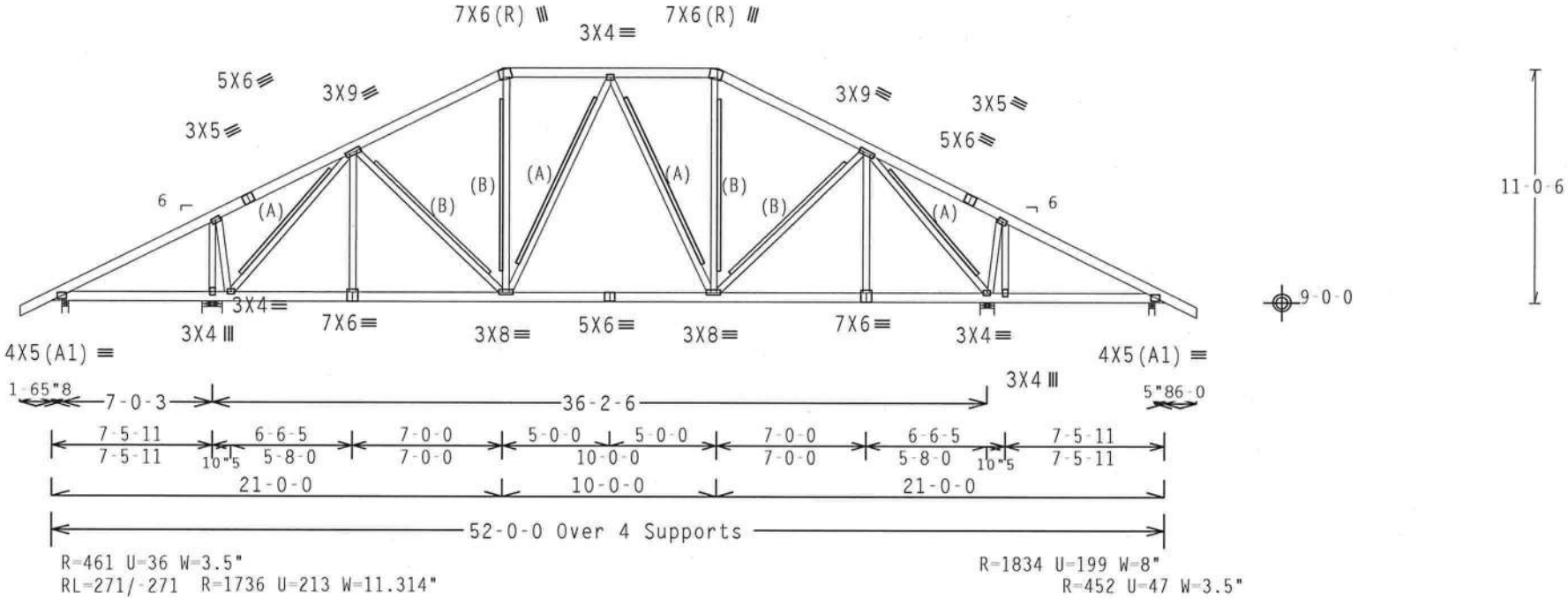

Design Crit: FBC2007Res/TPI-2002(STD)

PLT TYP. Wave FT/RT=10%(0%)/0(0) 8.07.00 QTY:1 FL/-/4/-/-/R/- Scale =.125"/Ft.

ALPINE
ITW Building Components Group Inc.
Haines City, FL 33844
FL COA #0 278

WARNING TRUSSES REQUIRE EXTREME CARE IN FABRICATION, HANDLING, SHIPPING, INSTALLING AND BRACING. REFER TO BCSI (BUILDING COMPONENT SAFETY INFORMATION), PUBLISHED BY TPI (TRUSS PLATE INSTITUTE, 218 NORTH LEE STREET, SUITE 312, ALEXANDRIA, VA. 22314) AND WTCA (WOOD TRUSS COUNCIL OF AMERICA, 6300 ENTERPRISE LANE, MADISON, WI 53719) FOR SAFETY PRACTICES PRIOR TO PERFORMING THESE FUNCTIONS. UNLESS OTHERWISE INDICATED TOP CHORD SHALL HAVE PROPERLY ATTACHED STRUCTURAL PANELS AND BOTTOM CHORD SHALL HAVE A PROPERLY ATTACHED RIGID CEILING.

IMPORTANTFURNISH A COPY OF THIS DESIGN TO THE INSTALLATION CONTRACTOR. ITW BCG, INC. SHALL NOT BE RESPONSIBLE FOR ANY DEVIATION FROM THIS DESIGN; ANY FAILURE TO BUILD THE TRUSS IN COMFORMANCE WITH TPI; OR FABRICATING, HANDLING, SHIPPING, INSTALLING & BRACING OF TRUSSES. DESIGN CONFORMS WITH APPLICABLE PROVISIONS OF NDS (NATIONAL DESIGN SPEC. BY AF&PA) AND TPI. ITW BCG CONNECTOR PLATES ARE MADE OF 20/18/16GA (W,H/SS/K) ASTM A653 GRADE 40/60 (W, K/H,SS) GALV. STEEL. APPLY PLATES TO EACH FACE OF TRUSS AND, UNLESS OTHERWISE LOCATED ON THIS DESIGN, POSITION PER DRAWINGS 160A-Z. ANY INSPECTION OF PLATES FOLLOWED BY (1) SHALL BE PER ANNEX A3 OF TPI1-2002 SEC.3. A SEAL ON THIS DRAWING INDICATES ACCEPTANCE OF PROFESSIONAL ENGINEERING RESPONSIBILITY SOLELY FOR THE TRUSS COMPONENT DESIGN SHOWN. THE SUITABILITY AND USE OF THIS COMPONENT FOR ANY BUILDING IS THE RESPONSIBILITY OF THE BUILDING DESIGNER PER ANSI/TPI 1 SEC. 2.

DOUGLAS FLEMING LICENSE No. 66648 STATE OF FLORIDA PROFESSIONAL ENGINEER

19 '09

TC LL	20.0 PSF	REF	R8228- 25829
TC DL	10.0 PSF	DATE	03/19/09
BC DL	10.0 PSF	DRW	HCUSR8228 09078019
BC LL	0.0 PSF	HC-ENG	DF/DF
TOT.LD.	40.0 PSF	SEQN-	9530
DUR.FAC.	1.25	FROM	AH
SPACING	24.0"	JREF-	1TQ38228Z01

Top chord 2x6 SP #2
Bot chord 2x6 SP #2
Webs 2x4 SP #3

Roof overhang supports 2.00 psf soffit load.

(C) 1x4 #3SRB SPF-S or better "T" brace. 80% length of web member. Attach with 8d Box or Gun (0.113"x2.5",min.)nails @ 6" OC.

(B) 2x6 #3 or better "T" brace. 80% length of web member. Attach with 16d Box or Gun (0.135"x3.5",min.)nails @ 6" OC.

Bottom chord checked for 10.00 psf non-concurrent live load.

WARNING: Furnish a copy of this DWG to the installation contractor. Special care must be taken during handling, shipping and installation of trusses. See "WARNING" note below.

110 mph wind, 15.00 ft mean hgt, ASCE 7-05, PART._ENC. bldg, not located within 6.50 ft from roof edge, CAT II, EXP B, wind TC DL=5.0 psf, wind BC DL=5.0 psf. Iw=1.00 GCpi(+/-)=0.55

Wind reactions based on MWFRS pressures.

(A) 2x4 #3 or better "T" brace. 80% length of web member. Attach with 16d Box or Gun (0.135"x3.5",min.)nails @ 6" OC.

In lieu of structural panels use purlins to brace all flat TC @ 24" OC.

Deflection meets L/240 live and L/180 total load.

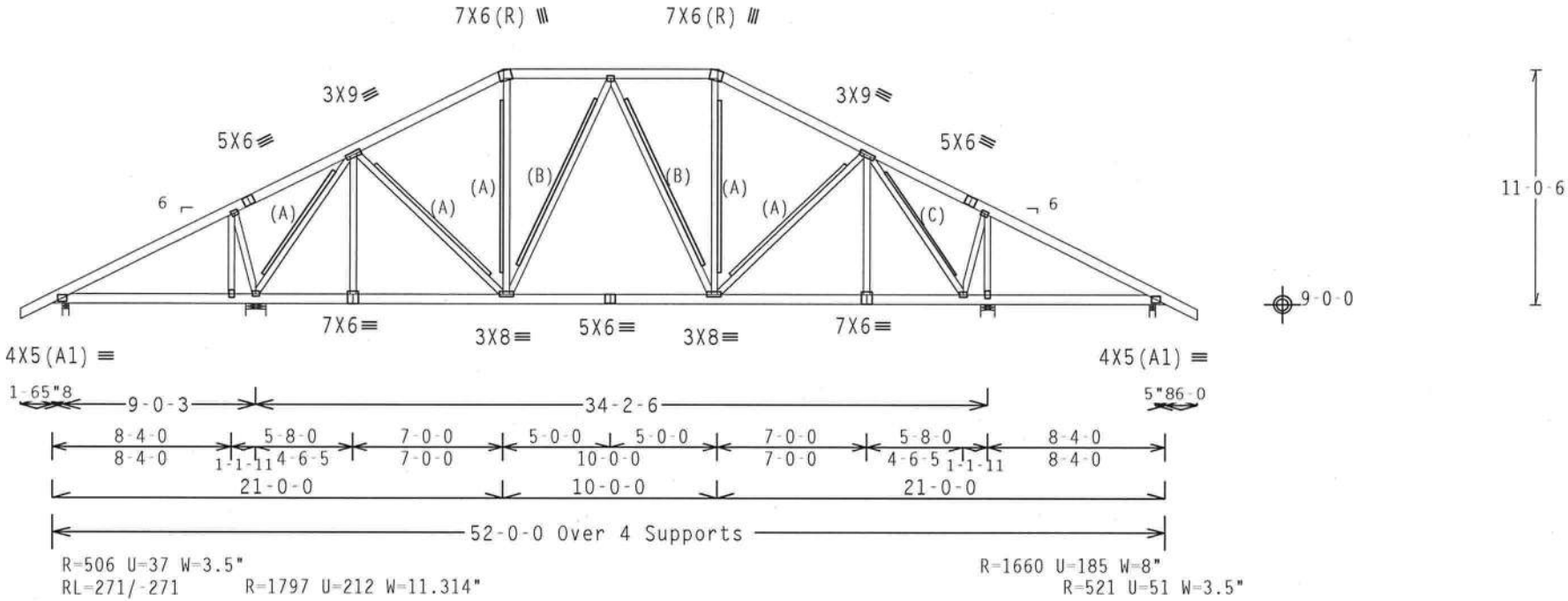

Note: All Plates Are 3X4 Except As Shown.

Design Crit: FBC2007Res/TPI-2002(STD)

PLT TYP. Wave FT/RT=10%(0%)/0(0) 8.07.00 QTY:1 FL/-/4/-/-/R/- Scale =.125"/Ft.

ALPINE
ITW Building Components Group Inc.
Haines City, FL 33844
FL COA #0 278

WARNING TRUSSES REQUIRE EXTREME CARE IN FABRICATION, HANDLING, SHIPPING, INSTALLING AND BRACING. REFER TO BCSI (BUILDING COMPONENT SAFETY INFORMATION), PUBLISHED BY TPI (TRUSS PLATE INSTITUTE, 218 NORTH LEE STREET, SUITE 312, ALEXANDRIA, VA, 22314) AND WTCA (WOOD TRUSS COUNCIL OF AMERICA, 6300 ENTERPRISE LANE, MADISON, WI 53719) FOR SAFETY PRACTICES PRIOR TO PERFORMING THESE FUNCTIONS. UNLESS OTHERWISE INDICATED TOP CHORD SHALL HAVE PROPERLY ATTACHED STRUCTURAL PANELS AND BOTTOM CHORD SHALL HAVE A PROPERLY ATTACHED RIGID CEILING.

IMPORTANTFURNISH A COPY OF THIS DESIGN TO THE INSTALLATION CONTRACTOR. ITW BCG, INC. SHALL NOT BE RESPONSIBLE FOR ANY DEVIATION FROM THIS DESIGN; ANY FAILURE TO BUILD THE TRUSS IN CONFORMANCE WITH TPI; OR FABRICATING, HANDLING, SHIPPING, INSTALLING & BRACING OF TRUSSES. DESIGN CONFORMS WITH APPLICABLE PROVISIONS OF NDS (NATIONAL DESIGN SPEC, BY AF&PA) AND TPI. ITW BCG CONNECTOR PLATES ARE MADE OF 20/18/16GA (W,H/SS/K) ASTM A653 GRADE 40/60 (W, K/H,SS) GALV. STEEL. APPLY PLATES TO EACH FACE OF TRUSS AND, UNLESS OTHERWISE LOCATED ON THIS DESIGN, POSITION PER DRAWINGS 160A-Z. ANY INSPECTION OF PLATES FOLLOWED BY (1) SHALL BE PER ANNEX A3 OF TPI1-2002 SEC.3. A SEAL ON THIS DRAWING INDICATES ACCEPTANCE OF PROFESSIONAL ENGINEERING RESPONSIBILITY SOLELY FOR THE TRUSS COMPONENT DESIGN SHOWN. THE SUITABILITY AND USE OF THIS COMPONENT FOR ANY BUILDING IS THE RESPONSIBILITY OF THE BUILDING DESIGNER PER ANSI/TPI 1 SEC. 2.

DOUGLAS FLEMING LICENSE No. 66648 STATE OF FLORIDA PROFESSIONAL ENGINEER

19 '09

TC LL	20.0 PSF	REF	R8228- 25830
TC DL	10.0 PSF	DATE	03/19/09
BC DL	10.0 PSF	DRW	HCUSR8228 09078020
BC LL	0.0 PSF	HC-ENG	DF/DF
TOT.LD.	40.0 PSF	SEQN-	9527
DUR.FAC.	1.25	FROM	AH
SPACING	24.0"	JREF-	1TQ38228Z01

Top chord 2x6 SP #2
Bot chord 2x6 SP #2
Webs 2x4 SP #3

Roof overhang supports 2.00 psf soffit load.

(A) 1x4 #3SRB SPF-S or better "T" brace. 80% length of web member. Attach with 8d Box or Gun (0.113"x2.5",min.)nails @ 6" OC.

(C) 2x6 #3 or better "T" brace. 80% length of web member. Attach with 16d Box or Gun (0.135"x3.5",min.)nails @ 6" OC.

Bottom chord checked for 10.00 psf non-concurrent live load.

WARNING: Furnish a copy of this DWG to the installation contractor. Special care must be taken during handling, shipping and installation of trusses. See "WARNING" note below.

110 mph wind, 15.00 ft mean hgt, ASCE 7-05, PART._ENC. bldg, not located within 6.50 ft from roof edge, CAT II, EXP B, wind TC DL=5.0 psf, wind BC DL=5.0 psf. Iw=1.00 GCpi(+/-)=0.55

Wind reactions based on MWFRS pressures.

(B) 2x4 #3 or better "T" brace. 80% length of web member. Attach with 16d Box or Gun (0.135"x3.5",min.)nails @ 6" OC.

In lieu of structural panels use purlins to brace all flat TC @ 24" OC.

Deflection meets L/240 live and L/180 total load.

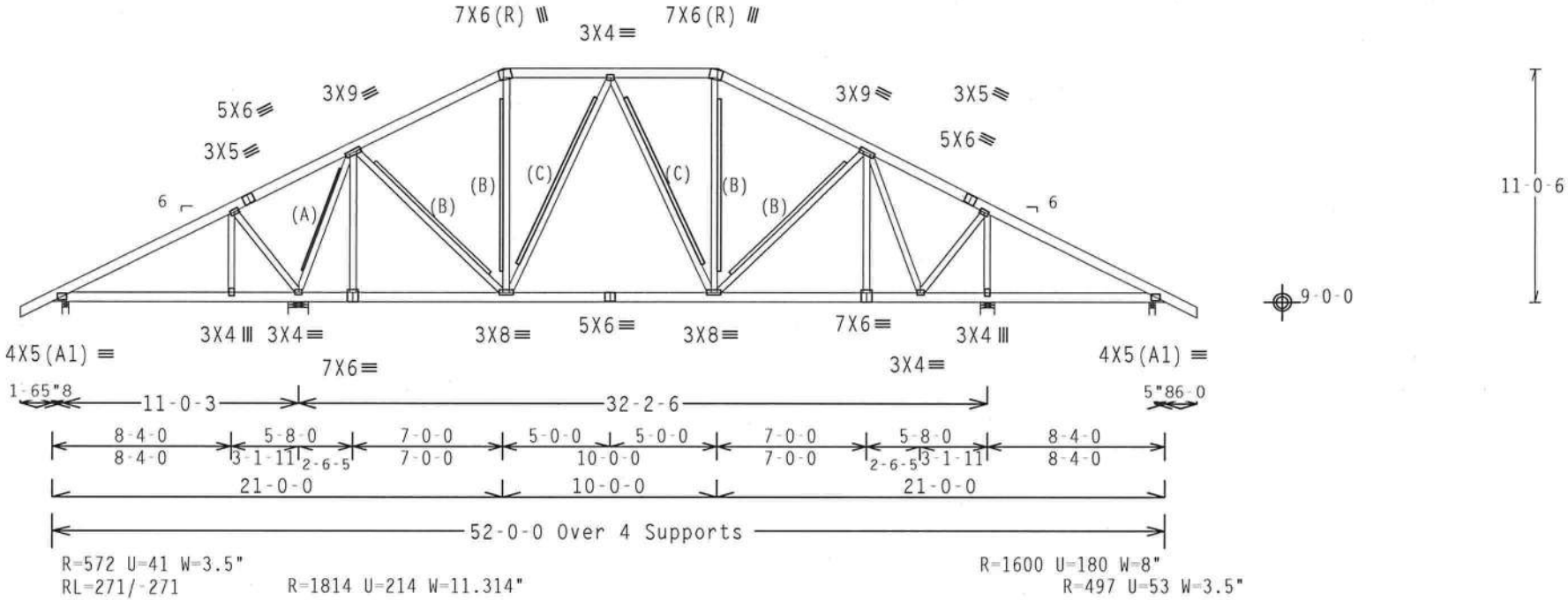

Design Crit: FBC2007Res/TPI-2002(STD)

PLT TYP. Wave | FT/RT=10%(0%)/0(0) | 8.07.00 | QTY:1 | FL/-/4/-/-/R/- | Scale =.125"/Ft.

ALPINE
ITW Building Components Group Inc.
Haines City, FL 33844
FL COA #0 278

WARNING TRUSSES REQUIRE EXTREME CARE IN FABRICATION, HANDLING, SHIPPING, INSTALLING AND BRACING. REFER TO BCSI (BUILDING COMPONENT SAFETY INFORMATION), PUBLISHED BY TPI (TRUSS PLATE INSTITUTE, 218 NORTH LEE STREET, SUITE 312, ALEXANDRIA, VA, 22314) AND WTCA (WOOD TRUSS COUNCIL OF AMERICA, 6300 ENTERPRISE LANE, MADISON, WI 53719) FOR SAFETY PRACTICES PRIOR TO PERFORMING THESE FUNCTIONS. UNLESS OTHERWISE INDICATED TOP CHORD SHALL HAVE PROPERLY ATTACHED STRUCTURAL PANELS AND BOTTOM CHORD SHALL HAVE A PROPERLY ATTACHED RIGID CEILING.

IMPORTANT FURNISH A COPY OF THIS DESIGN TO THE INSTALLATION CONTRACTOR. ITW BCG, INC. SHALL NOT BE RESPONSIBLE FOR ANY DEVIATION FROM THIS DESIGN; ANY FAILURE TO BUILD THE TRUSS IN COMFORMANCE WITH TPI; OR FABRICATING, HANDLING, SHIPPING, INSTALLING & BRACING OF TRUSSES. DESIGN CONFORMS WITH APPLICABLE PROVISIONS OF NDS (NATIONAL DESIGN SPEC, BY AF&PA) AND TPI. ITW BCG CONNECTOR PLATES ARE MADE OF 20/18/16GA (W,H/SS/K) ASTM A653 GRADE 40/60 (W, K/H,SS) GALV. STEEL. APPLY PLATES TO EACH FACE OF TRUSS AND, UNLESS OTHERWISE LOCATED ON THIS DESIGN, POSITION PER DRAWINGS 160A-Z. ANY INSPECTION OF PLATES FOLLOWED BY (1) SHALL BE PER ANNEX A3 OF TPI1-2002 SEC.3. A SEAL ON THIS DRAWING INDICATES ACCEPTANCE OF PROFESSIONAL ENGINEERING RESPONSIBILITY SOLELY FOR THE TRUSS COMPONENT DESIGN SHOWN. THE SUITABILITY AND USE OF THIS COMPONENT FOR ANY BUILDING IS THE RESPONSIBILITY OF THE BUILDING DESIGNER PER ANSI/TPI 1 SEC. 2.

DOUGLAS FLEMING LICENSE No. 66648 STATE OF FLORIDA PROFESSIONAL ENGINEER
MAR 19 '09

TC LL	20.0 PSF	REF R8228- 25831
TC DL	10.0 PSF	DATE 03/19/09
BC DL	10.0 PSF	DRW HCUSR8228 09078021
BC LL	0.0 PSF	HC-ENG DF/DF
TOT.LD.	40.0 PSF	SEQN- 9540
DUR.FAC.	1.25	FROM AH
SPACING	24.0"	JREF- 1TQ38228Z01

(9-070--Freeman Design Group Hudson -- , ** - H7B)

Top chord 2x4 SP #2 Dense
Bot chord 2x4 SP #2 Dense
Webs 2x4 SP #3
:Lt Wedge 2x4 SP #3::Rt Wedge 2x4 SP #3:

Roof overhang supports 2.00 psf soffit load.

#1 hip supports 7-0-0 jacks with no webs.

Deflection meets L/240 live and L/180 total load.

110 mph wind, 15.00 ft mean hgt, ASCE 7-05, CLOSED bldg, Located anywhere in roof, CAT II, EXP B, wind TC DL=5.0 psf, wind BC DL=5.0 psf. Iw=1.00 GCpi(+/-)=0.18

Wind reactions based on MWFRS pressures.

In lieu of structural panels use purlins to brace all flat TC @ 24" OC.

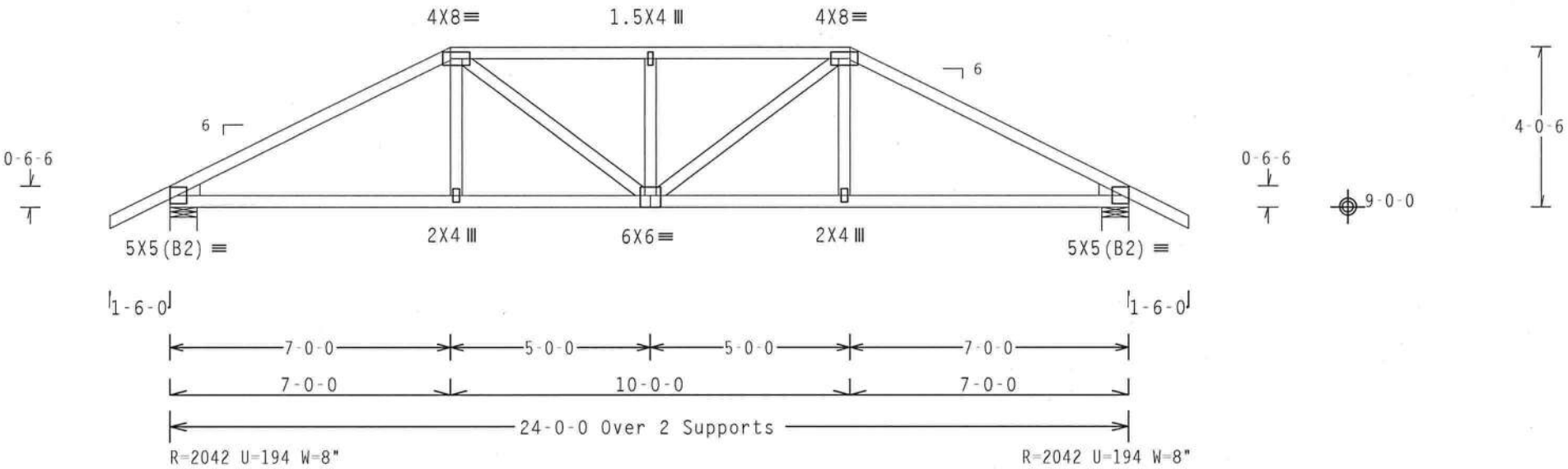

Design Crit: FBC2007Res/TPI-2002(STD)

PLT TYP. Wave | FT/RT=10%(0%)/0(0) | 8.07.00 | QTY:2 | FL/-/4/-/-/R/- | Scale =.25"/Ft.

ALPINE
ITW Building Components Group Inc.
Haines City, FL 33844
FL COA #0 278

WARNING TRUSSES REQUIRE EXTREME CARE IN FABRICATION, HANDLING, SHIPPING, INSTALLING AND BRACING. REFER TO BCSI (BUILDING COMPONENT SAFETY INFORMATION), PUBLISHED BY TPI (TRUSS PLATE INSTITUTE, 218 NORTH LEE STREET, SUITE 312, ALEXANDRIA, VA, 22314) AND WTCA (WOOD TRUSS COUNCIL OF AMERICA, 6300 ENTERPRISE LANE, MADISON, WI 53719) FOR SAFETY PRACTICES PRIOR TO PERFORMING THESE FUNCTIONS. UNLESS OTHERWISE INDICATED TOP CHORD SHALL HAVE PROPERLY ATTACHED STRUCTURAL PANELS AND BOTTOM CHORD SHALL HAVE A PROPERLY ATTACHED RIGID CEILING.

IMPORTANT FURNISH A COPY OF THIS DESIGN TO THE INSTALLATION CONTRACTOR. ITW BCG, INC. SHALL NOT BE RESPONSIBLE FOR ANY DEVIATION FROM THIS DESIGN; ANY FAILURE TO BUILD THE TRUSS IN COMFORMANCE WITH TPI; OR FABRICATING, HANDLING, SHIPPING, INSTALLING & BRACING OF TRUSSES.
DESIGN CONFORMS WITH APPLICABLE PROVISIONS OF NDS (NATIONAL DESIGN SPEC, BY AF&PA) AND TPI. ITW BCG CONNECTOR PLATES ARE MADE OF 20/18/16GA (W,H/SS/K) ASTM A653 GRADE 40/60 (W, K/H,SS) GALV. STEEL. APPLY PLATES TO EACH FACE OF TRUSS AND, UNLESS OTHERWISE LOCATED ON THIS DESIGN, POSITION PER DRAWINGS 160A-Z. ANY INSPECTION OF PLATES FOLLOWED BY (1) SHALL BE PER ANNEX A3 OF TPI1-2002 SEC.3. A SEAL ON THIS DRAWING INDICATES ACCEPTANCE OF PROFESSIONAL ENGINEERING RESPONSIBILITY SOLELY FOR THE TRUSS COMPONENT DESIGN SHOWN. THE SUITABILITY AND USE OF THIS COMPONENT FOR ANY BUILDING IS THE RESPONSIBILITY OF THE BUILDING DESIGNER PER ANSI/TPI 1 SEC. 2.

DOUGLAS FLEMING LICENSE No. 66648 STATE OF FLORIDA PROFESSIONAL ENGINEER
19 '09

TC LL	20.0 PSF	REF	R8228- 25832
TC DL	10.0 PSF	DATE	03/19/09
BC DL	10.0 PSF	DRW	HCUSR8228 09078022
BC LL	0.0 PSF	HC-ENG	DF/DF
TOT.LD.	40.0 PSF	SEQN-	9236
DUR.FAC.	1.25	FROM	AH
SPACING	SEE ABOVE	JREF-	1TQ38228Z01

(9-070--Freeman Design Group Hudson -- , ** - H9B)

Top chord 2x4 SP #2 Dense
Bot chord 2x4 SP #2 Dense
Webs 2x4 SP #3

Roof overhang supports 2.00 psf soffit load.

In lieu of structural panels use purlins to brace all flat TC @ 24" OC.

110 mph wind, 15.00 ft mean hgt, ASCE 7-05, CLOSED bldg, not located within 4.50 ft from roof edge, CAT II, EXP B, wind TC DL=5.0 psf, wind BC DL=5.0 psf. Iw=1.00 GCpi(+/-)=0.18

Wind reactions based on MWFRS pressures.

Bottom chord checked for 10.00 psf non-concurrent live load.

Deflection meets L/240 live and L/180 total load.

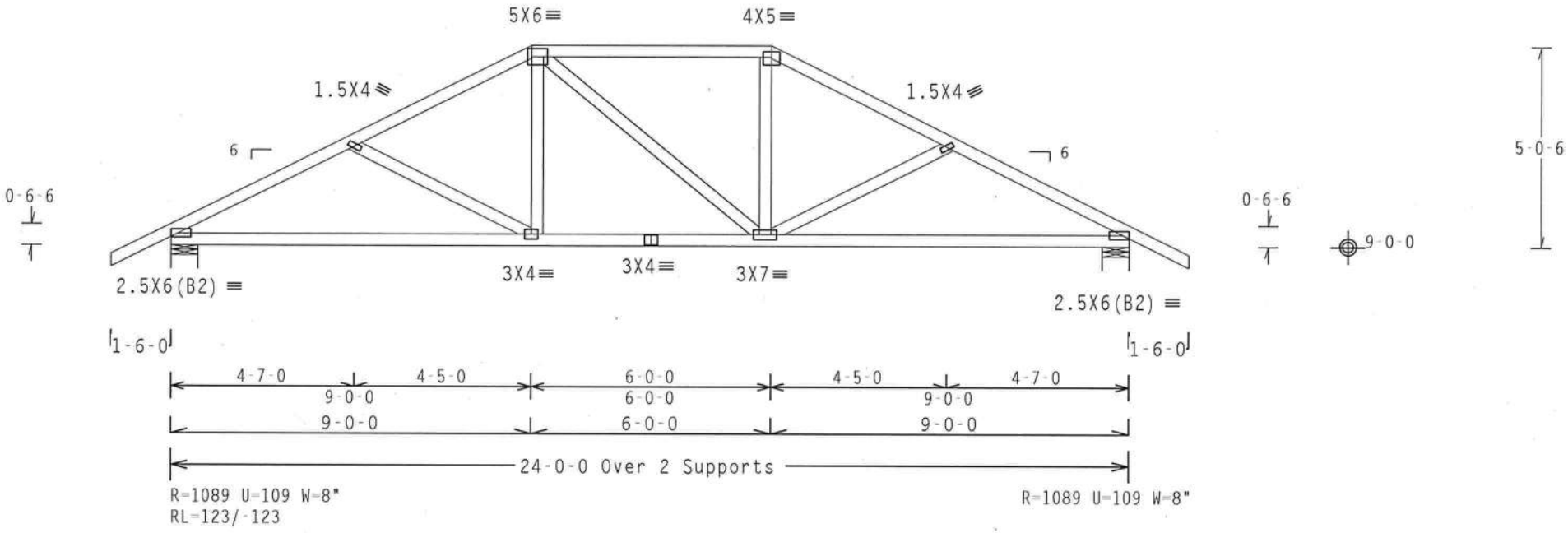

Design Crit: FBC2007Res/TPI-2002(STD)

PLT TYP. Wave | FT/RT=10%(0%)/0(0) | 8.07.00 | QTY:2 | FL/-/4/-/-/R/- | Scale =.25"/Ft.

ALPINE
ITW Building Components Group Inc.
Haines City, FL 33844
FL COA #0 278

WARNING TRUSSES REQUIRE EXTREME CARE IN FABRICATION, HANDLING, SHIPPING, INSTALLING AND BRACING. REFER TO BCSI (BUILDING COMPONENT SAFETY INFORMATION), PUBLISHED BY TPI (TRUSS PLATE INSTITUTE, 218 NORTH LEE STREET, SUITE 312, ALEXANDRIA, VA, 22314) AND WTCA (WOOD TRUSS COUNCIL OF AMERICA, 6300 ENTERPRISE LANE, MADISON, WI 53719) FOR SAFETY PRACTICES PRIOR TO PERFORMING THESE FUNCTIONS. UNLESS OTHERWISE INDICATED TOP CHORD SHALL HAVE PROPERLY ATTACHED STRUCTURAL PANELS AND BOTTOM CHORD SHALL HAVE A PROPERLY ATTACHED RIGID CEILING.

IMPORTANT FURNISH A COPY OF THIS DESIGN TO THE INSTALLATION CONTRACTOR. ITW BCG, INC. SHALL NOT BE RESPONSIBLE FOR ANY DEVIATION FROM THIS DESIGN; ANY FAILURE TO BUILD THE TRUSS IN COMFORMANCE WITH TPI; OR FABRICATING, HANDLING, SHIPPING, INSTALLING & BRACING OF TRUSSES.
DESIGN CONFORMS WITH APPLICABLE PROVISIONS OF NDS (NATIONAL DESIGN SPEC. BY AF&PA) AND TPI. ITW BCG CONNECTOR PLATES ARE MADE OF 20/18/16GA (W,H/SS/K) ASTM A653 GRADE 40/60 (W, K/H,SS) GALV. STEEL. APPLY PLATES TO EACH FACE OF TRUSS AND, UNLESS OTHERWISE LOCATED ON THIS DESIGN, POSITION PER DRAWINGS 160A-Z. ANY INSPECTION OF PLATES FOLLOWED BY (1) SHALL BE PER ANNEX A3 OF TPI1-2002 SEC.3. A SEAL ON THIS DRAWING INDICATES ACCEPTANCE OF PROFESSIONAL ENGINEERING RESPONSIBILITY SOLELY FOR THE TRUSS COMPONENT DESIGN SHOWN. THE SUITABILITY AND USE OF THIS COMPONENT FOR ANY BUILDING IS THE RESPONSIBILITY OF THE BUILDING DESIGNER PER ANSI/TPI 1 SEC. 2.

DOUGLAS FLEMING LICENSE No. 66648 STATE OF FLORIDA PROFESSIONAL ENGINEER
19 '09

TC LL	20.0 PSF	REF	R8228- 25833
TC DL	10.0 PSF	DATE	03/19/09
BC DL	10.0 PSF	DRW	HCUSR8228 09078001
BC LL	0.0 PSF	HC-ENG	DF/DF *
TOT.LD.	40.0 PSF	SEQN-	9240
DUR.FAC.	1.25	FROM	AH
SPACING	24.0"	JREF-	1TQ38228Z01

(9-070--Freeman Design Group Hudson -- , ** - H11B)

Top chord 2x4 SP #2 Dense
Bot chord 2x4 SP #2 Dense
Webs 2x4 SP #3

Roof overhang supports 2.00 psf soffit load.

In lieu of structural panels use purlins to brace all flat TC @ 24" OC.

110 mph wind, 15.00 ft mean hgt, ASCE 7-05, CLOSED bldg, not located within 4.50 ft from roof edge, CAT II, EXP B, wind TC DL=5.0 psf, wind BC DL=5.0 psf. Iw=1.00 GCpi(+/-)=0.18

Wind reactions based on MWFRS pressures.

Bottom chord checked for 10.00 psf non-concurrent live load.

Deflection meets L/240 live and L/180 total load.

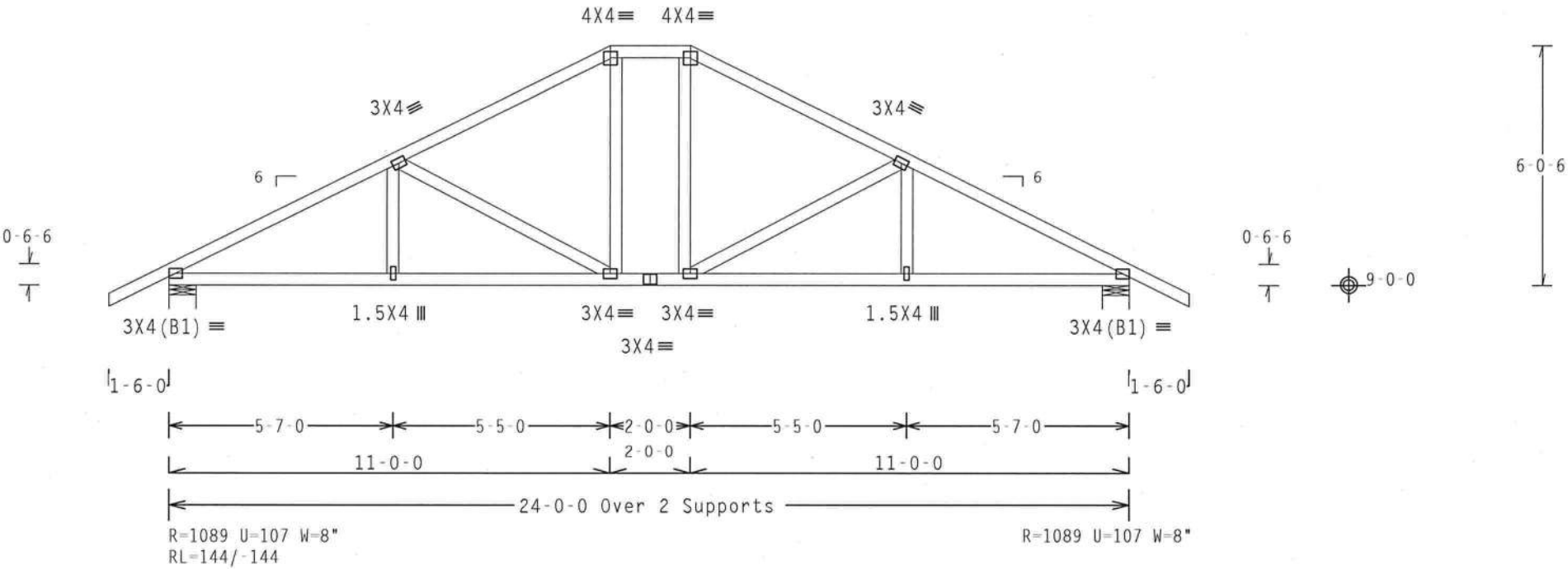

Design Crit: FBC2007Res/TPI-2002(STD)

PLT TYP. Wave | FT/RT=10%(0%)/0(0) | 8.07.00 | QTY:2 | FL/-/4/-/-/R/- | Scale =.25"/Ft.

ALPINE
ITW Building Components Group Inc.
Haines City, FL 33844
FL COA #0 278

WARNING TRUSSES REQUIRE EXTREME CARE IN FABRICATION, HANDLING, SHIPPING, INSTALLING AND BRACING. REFER TO BCSI (BUILDING COMPONENT SAFETY INFORMATION), PUBLISHED BY TPI (TRUSS PLATE INSTITUTE, 218 NORTH LEE STREET, SUITE 312, ALEXANDRIA, VA, 22314) AND WTCA (WOOD TRUSS COUNCIL OF AMERICA, 6300 ENTERPRISE LANE, MADISON, WI 53719) FOR SAFETY PRACTICES PRIOR TO PERFORMING THESE FUNCTIONS. UNLESS OTHERWISE INDICATED TOP CHORD SHALL HAVE PROPERLY ATTACHED STRUCTURAL PANELS AND BOTTOM CHORD SHALL HAVE A PROPERLY ATTACHED RIGID CEILING.

IMPORTANTFURNISH A COPY OF THIS DESIGN TO THE INSTALLATION CONTRACTOR. ITW BCG, INC. SHALL NOT BE RESPONSIBLE FOR ANY DEVIATION FROM THIS DESIGN; ANY FAILURE TO BUILD THE TRUSS IN COMFORMANCE WITH TPI; OR FABRICATING, HANDLING, SHIPPING, INSTALLING & BRACING OF TRUSSES.
DESIGN CONFORMS WITH APPLICABLE PROVISIONS OF NDS (NATIONAL DESIGN SPEC. BY AF&PA) AND TPI. ITW BCG CONNECTOR PLATES ARE MADE OF 20/18/16GA (W,H/SS/K) ASTM A653 GRADE 40/60 (W, K/H,SS) GALV. STEEL. APPLY PLATES TO EACH FACE OF TRUSS AND, UNLESS OTHERWISE LOCATED ON THIS DESIGN, POSITION PER DRAWINGS 160A-Z. ANY INSPECTION OF PLATES FOLLOWED BY (1) SHALL BE PER ANNEX A3 OF TPI1-2002 SEC.3. A SEAL ON THIS DRAWING INDICATES ACCEPTANCE OF PROFESSIONAL ENGINEERING RESPONSIBILITY SOLELY FOR THE TRUSS COMPONENT DESIGN SHOWN. THE SUITABILITY AND USE OF THIS COMPONENT FOR ANY BUILDING IS THE RESPONSIBILITY OF THE BUILDING DESIGNER PER ANSI/TPI 1 SEC. 2.

DOUGLAS FLEMING LICENSE No. 66648 STATE OF FLORIDA PROFESSIONAL ENGINEER
19 '09

TC LL	20.0 PSF	REF R8228- 25834
TC DL	10.0 PSF	DATE 03/19/09
BC DL	10.0 PSF	DRW HCUSR8228 09078002
BC LL	0.0 PSF	HC-ENG DF/DF *
TOT.LD.	40.0 PSF	SEQN- 9246
DUR.FAC.	1.25	FROM AH
SPACING	24.0"	JREF- 1TQ38228Z01

Top chord 2x4 SP #2 Dense
Bot chord 2x6 SP #2
Webs 2x4 SP #3

110 mph wind, 15.00 ft mean hgt, ASCE 7-05, CLOSED bldg, not located within 4.50 ft from roof edge, CAT II, EXP B, wind TC DL=5.0 psf, wind BC DL=5.0 psf. Iw=1.00 GCpi(+/-)=0.18

Wind reactions based on MWFRS pressures.

Roof overhang supports 2.00 psf soffit load.

SPECIAL LOADS
------(LUMBER DUR.FAC.=1.25 / PLATE DUR.FAC.=1.25)

TC -	From	62 PLF	at -1.50	to	62 PLF	at	4.15
TC -	From	62 PLF	at 4.15	to	62 PLF	at	8.29
BC -	From	4 PLF	at -1.50	to	4 PLF	at	0.00
BC -	From	20 PLF	at 0.00	to	20 PLF	at	8.29
BC -		45 LB Conc. Load	at 1.09				
BC -		127 LB Conc. Load	at 3.09				
BC -		209 LB Conc. Load	at 5.09				
BC -		292 LB Conc. Load	at 7.06				

Deflection meets L/240 live and L/180 total load.

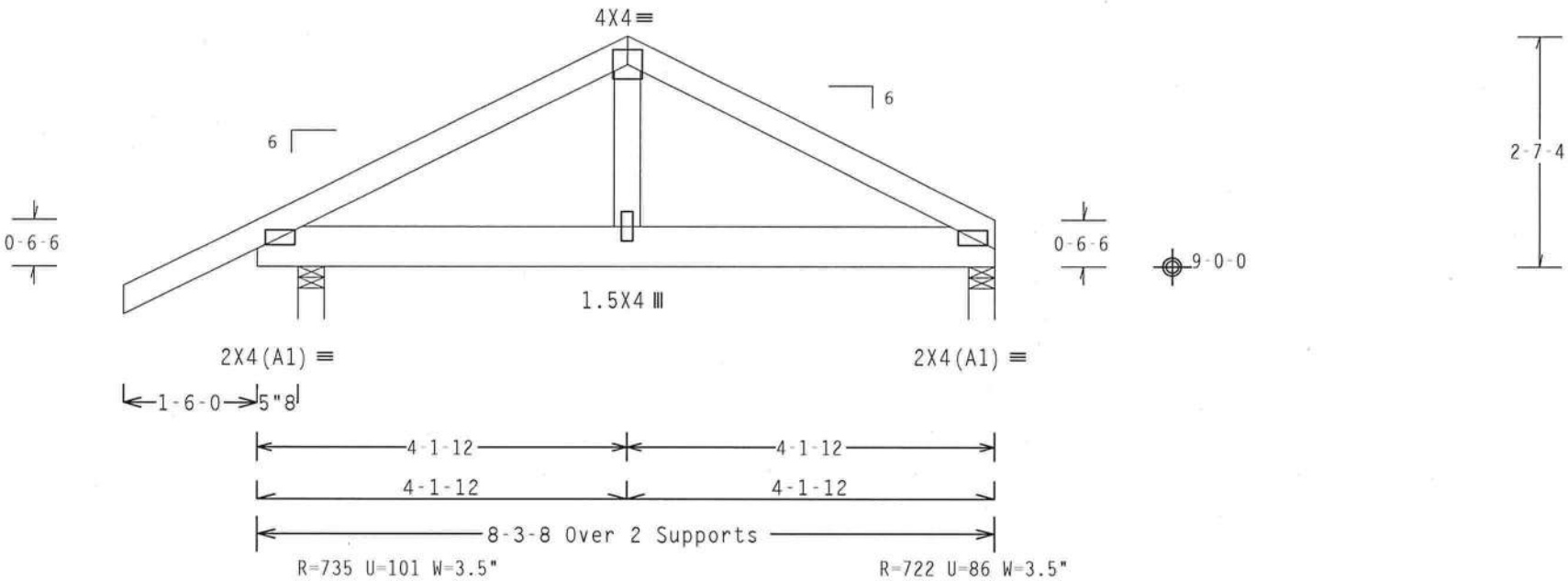

Design Crit: FBC2007Res/TPI-2002(STD)

PLT TYP. Wave | FT/RT=10%(0%)/0(0) | 8.07.00 | QTY:1 | FL/-/4/-/-/R/- | Scale =.5"/Ft.

ALPINE
ITW Building Components Group Inc.
Haines City, FL 33844
FL COA #0 278

WARNING TRUSSES REQUIRE EXTREME CARE IN FABRICATION, HANDLING, SHIPPING, INSTALLING AND BRACING. REFER TO BCSI (BUILDING COMPONENT SAFETY INFORMATION), PUBLISHED BY TPI (TRUSS PLATE INSTITUTE, 218 NORTH LEE STREET, SUITE 312, ALEXANDRIA, VA, 22314) AND WTCA (WOOD TRUSS COUNCIL OF AMERICA, 6300 ENTERPRISE LANE, MADISON, WI 53719) FOR SAFETY PRACTICES PRIOR TO PERFORMING THESE FUNCTIONS. UNLESS OTHERWISE INDICATED TOP CHORD SHALL HAVE PROPERLY ATTACHED STRUCTURAL PANELS AND BOTTOM CHORD SHALL HAVE A PROPERLY ATTACHED RIGID CEILING.

IMPORTANTFURNISH A COPY OF THIS DESIGN TO THE INSTALLATION CONTRACTOR. ITW BCG, INC. SHALL NOT BE RESPONSIBLE FOR ANY DEVIATION FROM THIS DESIGN; ANY FAILURE TO BUILD THE TRUSS IN CONFORMANCE WITH TPI; OR FABRICATING, HANDLING, SHIPPING, INSTALLING & BRACING OF TRUSSES.
DESIGN CONFORMS WITH APPLICABLE PROVISIONS OF NDS (NATIONAL DESIGN SPEC. BY AF&PA) AND TPI. ITW BCG CONNECTOR PLATES ARE MADE OF 20/18/16GA (W,H/SS/K) ASTM A653 GRADE 40/60 (W, K/H,SS) GALV. STEEL. APPLY PLATES TO EACH FACE OF TRUSS AND, UNLESS OTHERWISE LOCATED ON THIS DESIGN, POSITION PER DRAWINGS 160A-2. ANY INSPECTION OF PLATES FOLLOWED BY (1) SHALL BE PER ANNEX A3 OF TPI1-2002 SEC.3. A SEAL ON THIS DRAWING INDICATES ACCEPTANCE OF PROFESSIONAL ENGINEERING RESPONSIBILITY SOLELY FOR THE TRUSS COMPONENT DESIGN SHOWN. THE SUITABILITY AND USE OF THIS COMPONENT FOR ANY BUILDING IS THE RESPONSIBILITY OF THE BUILDING DESIGNER PER ANSI/TPI 1 SEC. 2.

DOUGLAS FLEMING LICENSE No. 66648 STATE OF FLORIDA PROFESSIONAL ENGINEER
19 '09

TC LL	20.0 PSF	REF R8228- 25835
TC DL	10.0 PSF	DATE 03/19/09
BC DL	10.0 PSF	DRW HCUSR8228 09078053
BC LL	0.0 PSF	HC-ENG DF/DF
TOT.LD.	40.0 PSF	SEQN- 9336
DUR.FAC.	1.25	FROM AH
SPACING	24.0"	JREF- 1TQ38228Z01

(9-070--Freeman Design Group Hudson -- . ** - C1)

Top chord 2x4 SP #2 Dense
Bot chord 2x4 SP #2 Dense
Webs 2x4 SP #3

Roof overhang supports 2.00 psf soffit load.

Bottom chord checked for 10.00 psf non-concurrent live load.

110 mph wind, 15.00 ft mean hgt, ASCE 7-05, PART._ENC. bldg, not located within 4.50 ft from roof edge, CAT II, EXP B, wind TC DL=5.0 psf, wind BC DL=5.0 psf. Iw=1.00 GCpi(+/-)=0.55

Wind reactions based on MWFRS pressures.

Deflection meets L/240 live and L/180 total load.

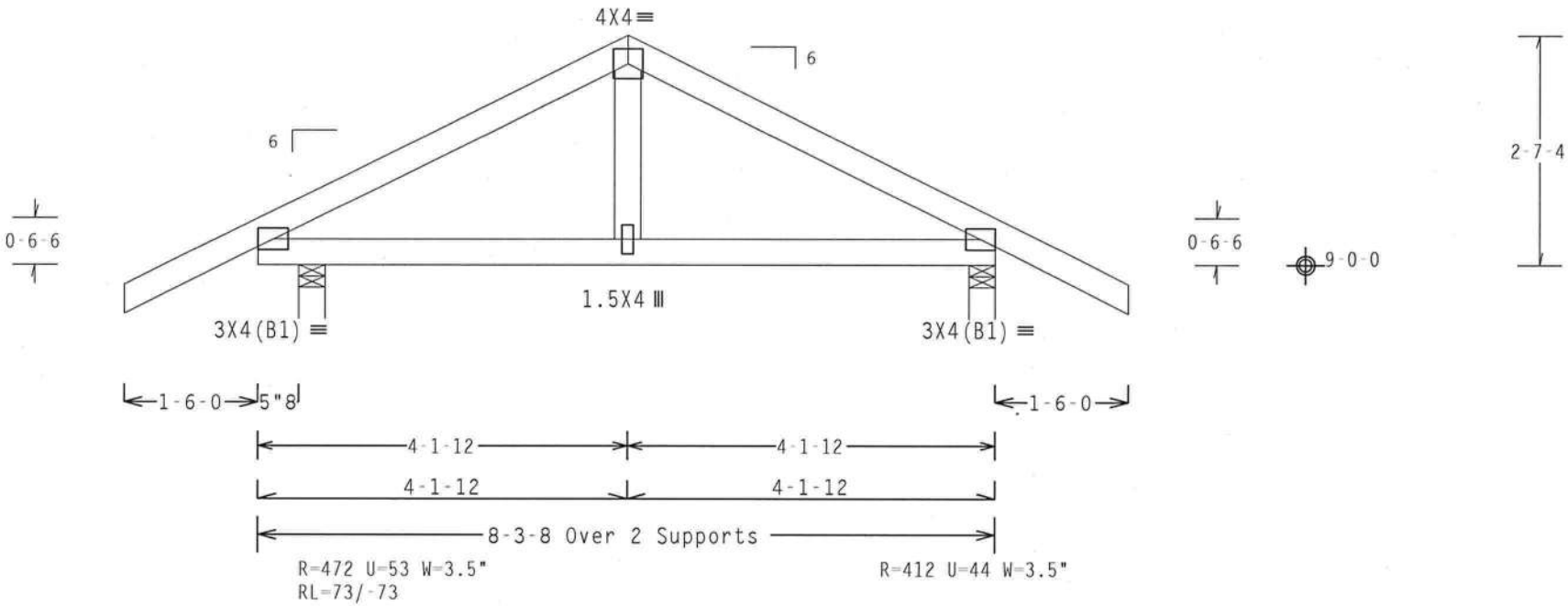

Design Crit: FBC2007Res/TPI-2002(STD)
FT/RT=10%(0%)/0(0)

PLT TYP. Wave | 8.07.00 | QTY:5 | FL/-/4/-/-/R/- | Scale =.5"/Ft.

ALPINE
ITW Building Components Group Inc.
Haines City, FL 33844
FL COA #0 278

WARNING TRUSSES REQUIRE EXTREME CARE IN FABRICATION, HANDLING, SHIPPING, INSTALLING AND BRACING. REFER TO BCSI (BUILDING COMPONENT SAFETY INFORMATION), PUBLISHED BY TPI (TRUSS PLATE INSTITUTE, 218 NORTH LEE STREET, SUITE 312, ALEXANDRIA, VA, 22314) AND WTCA (WOOD TRUSS COUNCIL OF AMERICA, 6300 ENTERPRISE LANE, MADISON, WI 53719) FOR SAFETY PRACTICES PRIOR TO PERFORMING THESE FUNCTIONS. UNLESS OTHERWISE INDICATED TOP CHORD SHALL HAVE PROPERLY ATTACHED STRUCTURAL PANELS AND BOTTOM CHORD SHALL HAVE A PROPERLY ATTACHED RIGID CEILING.

IMPORTANTFURNISH A COPY OF THIS DESIGN TO THE INSTALLATION CONTRACTOR. ITW BCG, INC. SHALL NOT BE RESPONSIBLE FOR ANY DEVIATION FROM THIS DESIGN; ANY FAILURE TO BUILD THE TRUSS IN CONFORMANCE WITH TPI; OR FABRICATING, HANDLING, SHIPPING, INSTALLING & BRACING OF TRUSSES.
DESIGN CONFORMS WITH APPLICABLE PROVISIONS OF NDS (NATIONAL DESIGN SPEC. BY AF&PA) AND TPI. ITW BCG CONNECTOR PLATES ARE MADE OF 20/18/16GA (W,H/SS/K) ASTM A653 GRADE 40/60 (W, K/H,SS) GALV. STEEL. APPLY PLATES TO EACH FACE OF TRUSS AND, UNLESS OTHERWISE LOCATED ON THIS DESIGN, POSITION PER DRAWINGS 160A-Z. ANY INSPECTION OF PLATES FOLLOWED BY (1) SHALL BE PER ANNEX A3 OF TPI1-2002 SEC.3. A SEAL ON THIS DRAWING INDICATES ACCEPTANCE OF PROFESSIONAL ENGINEERING RESPONSIBILITY SOLELY FOR THE TRUSS COMPONENT DESIGN SHOWN. THE SUITABILITY AND USE OF THIS COMPONENT FOR ANY BUILDING IS THE RESPONSIBILITY OF THE BUILDING DESIGNER PER ANSI/TPI 1 SEC. 2.

DOUGLAS FLEMING LICENSE No. 66648 STATE OF FLORIDA PROFESSIONAL ENGINEER
Mar 19 '09

TC LL	20.0 PSF	REF R8228- 25836
TC DL	10.0 PSF	DATE 03/19/09
BC DL	10.0 PSF	DRW HCUSR8228 09078003
BC LL	0.0 PSF	HC-ENG DF/DF *
TOT.LD.	40.0 PSF	SEQN- 9333
DUR.FAC.	1.25	FROM AH
SPACING	24.0"	JREF- 1TQ38228Z01

Top chord 2x4 SP #2 Dense
Bot chord 2x4 SP #2 Dense

Roof overhang supports 2.00 psf soffit load.

Bottom chord checked for 10.00 psf non-concurrent live load.

110 mph wind, 15.00 ft mean hgt, ASCE 7-05, CLOSED bldg, Located anywhere in roof, CAT II, EXP B, wind TC DL=5.0 psf, wind BC DL=5.0 psf. Iw=1.00 GCpi(+/-)=0.18

Wind reactions based on MWFRS pressures.

Deflection meets L/240 live and L/180 total load.

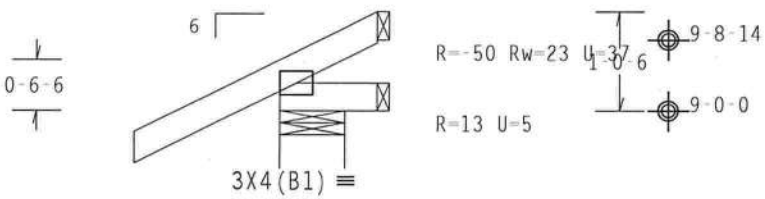

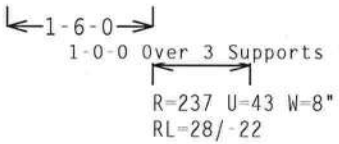

Design Crit: FBC2007Res/TPI-2002(STD)

PLT TYP. Wave FT/RT=10%(0%)/0(0) 8.07.00 [illegible] QTY:8 FL/-/4/-/-/R/- Scale =.5"/Ft.

ALPINE
ITW Building Components Group Inc.
Haines City, FL 33844
FL COA #0 278

WARNING TRUSSES REQUIRE EXTREME CARE IN FABRICATION, HANDLING, SHIPPING, INSTALLING AND BRACING. REFER TO BCSI (BUILDING COMPONENT SAFETY INFORMATION), PUBLISHED BY TPI (TRUSS PLATE INSTITUTE, 218 NORTH LEE STREET, SUITE 312, ALEXANDRIA, VA. 22314) AND WTCA (WOOD TRUSS COUNCIL OF AMERICA, 6300 ENTERPRISE LANE, MADISON, WI 53719) FOR SAFETY PRACTICES PRIOR TO PERFORMING THESE FUNCTIONS. UNLESS OTHERWISE INDICATED TOP CHORD SHALL HAVE PROPERLY ATTACHED STRUCTURAL PANELS AND BOTTOM CHORD SHALL HAVE A PROPERLY ATTACHED RIGID CEILING.

IMPORTANT FURNISH A COPY OF THIS DESIGN TO THE INSTALLATION CONTRACTOR. ITW BCG, INC. SHALL NOT BE RESPONSIBLE FOR ANY DEVIATION FROM THIS DESIGN; ANY FAILURE TO BUILD THE TRUSS IN CONFORMANCE WITH TPI; OR FABRICATING, HANDLING, SHIPPING, INSTALLING & BRACING OF TRUSSES. DESIGN CONFORMS WITH APPLICABLE PROVISIONS OF NDS (NATIONAL DESIGN SPEC. BY AF&PA) AND TPI. ITW BCG CONNECTOR PLATES ARE MADE OF 20/18/16GA (W,H/SS/K) ASTM A653 GRADE 40/60 (W, K/H,SS) GALV. STEEL. APPLY PLATES TO EACH FACE OF TRUSS AND, UNLESS OTHERWISE LOCATED ON THIS DESIGN, POSITION PER DRAWINGS 160A-Z. ANY INSPECTION OF PLATES FOLLOWED BY (1) SHALL BE PER ANNEX A3 OF TPI1-2002 SEC.3. A SEAL ON THIS DRAWING INDICATES ACCEPTANCE OF PROFESSIONAL ENGINEERING RESPONSIBILITY SOLELY FOR THE TRUSS COMPONENT DESIGN SHOWN. THE SUITABILITY AND USE OF THIS COMPONENT FOR ANY BUILDING IS THE RESPONSIBILITY OF THE BUILDING DESIGNER PER ANSI/TPI 1 SEC. 2.

DOUGLAS FLEMING LICENSE No. 66648 STATE OF FLORIDA PROFESSIONAL ENGINEER
[illegible] 19 '09

TC LL	20.0 PSF	REF	R8228- 25837
TC DL	10.0 PSF	DATE	03/19/09
BC DL	10.0 PSF	DRW	HCUSR8228 09078023
BC LL	0.0 PSF	HC-ENG	DF/DF
TOT.LD.	40.0 PSF	SEQN-	9208
DUR.FAC.	1.25	FROM	AH
SPACING	24.0"	JREF-	1TQ38228Z01

(9-070--Freeman Design Group Hudson -- , ** - EJ7B)

Top chord 2x4 SP #2 Dense
Bot chord 2x4 SP #2 Dense

Roof overhang supports 2.00 psf soffit load.

Bottom chord checked for 10.00 psf non-concurrent live load.

110 mph wind, 15.00 ft mean hgt, ASCE 7-05, PART. ENC. bldg, not located within 4.50 ft from roof edge, CAT II, EXP B, wind TC DL=5.0 psf, wind BC DL=5.0 psf. Iw=1.00 GCpi(+/-)=0.55

Wind reactions based on MWFRS pressures.

Deflection meets L/240 live and L/180 total load.

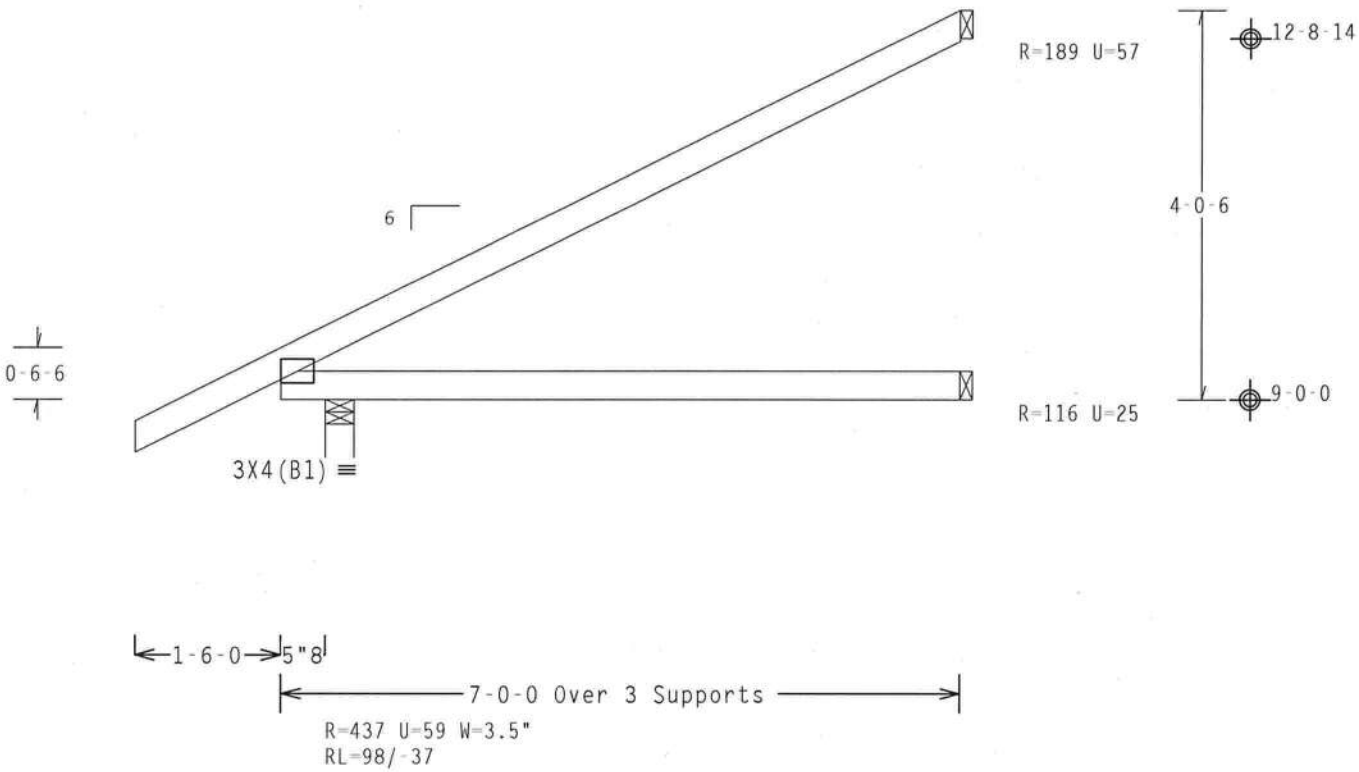

Design Crit: FBC2007Res/TPI-2002(STD)

PLT TYP. Wave | FT/RT=10%(0%)/0(0) | 8.07.00 | QTY:3 | FL/-/4/-/-/R/- | Scale =.5"/Ft.

ALPINE
ITW Building Components Group Inc.
Haines City, FL 33844
FL COA #0 278

WARNING TRUSSES REQUIRE EXTREME CARE IN FABRICATION, HANDLING, SHIPPING, INSTALLING AND BRACING. REFER TO BCSI (BUILDING COMPONENT SAFETY INFORMATION), PUBLISHED BY TPI (TRUSS PLATE INSTITUTE, 218 NORTH LEE STREET, SUITE 312, ALEXANDRIA, VA, 22314) AND WTCA (WOOD TRUSS COUNCIL OF AMERICA, 6300 ENTERPRISE LANE, MADISON, WI 53719) FOR SAFETY PRACTICES PRIOR TO PERFORMING THESE FUNCTIONS. UNLESS OTHERWISE INDICATED TOP CHORD SHALL HAVE PROPERLY ATTACHED STRUCTURAL PANELS AND BOTTOM CHORD SHALL HAVE A PROPERLY ATTACHED RIGID CEILING.

IMPORTANTFURNISH A COPY OF THIS DESIGN TO THE INSTALLATION CONTRACTOR. ITW BCG, INC. SHALL NOT BE RESPONSIBLE FOR ANY DEVIATION FROM THIS DESIGN; ANY FAILURE TO BUILD THE TRUSS IN COMFORMANCE WITH TPI; OR FABRICATING, HANDLING, SHIPPING, INSTALLING & BRACING OF TRUSSES.
DESIGN CONFORMS WITH APPLICABLE PROVISIONS OF NDS (NATIONAL DESIGN SPEC. BY AF&PA) AND TPI. ITW BCG CONNECTOR PLATES ARE MADE OF 20/18/16GA (W,H/SS/K) ASTM A653 GRADE 40/60 (W, K/H,SS) GALV. STEEL. APPLY PLATES TO EACH FACE OF TRUSS AND, UNLESS OTHERWISE LOCATED ON THIS DESIGN, POSITION PER DRAWINGS 160A-Z. ANY INSPECTION OF PLATES FOLLOWED BY (1) SHALL BE PER ANNEX A3 OF TPI1-2002 SEC.3. A SEAL ON THIS DRAWING INDICATES ACCEPTANCE OF PROFESSIONAL ENGINEERING RESPONSIBILITY SOLELY FOR THE TRUSS COMPONENT DESIGN SHOWN. THE SUITABILITY AND USE OF THIS COMPONENT FOR ANY BUILDING IS THE RESPONSIBILITY OF THE BUILDING DESIGNER PER ANSI/TPI 1 SEC. 2.

DOUGLAS FLEMING LICENSE No. 66648 STATE OF FLORIDA PROFESSIONAL ENGINEER
Mar 19 '09

TC LL	20.0 PSF	REF R8228- 25859
TC DL	10.0 PSF	DATE 03/19/09
BC DL	10.0 PSF	DRW HCUSR8228 09078045
BC LL	0.0 PSF	HC-ENG DF/DF
TOT.LD.	40.0 PSF	SEQN- 9296
DUR.FAC.	1.25	FROM AH
SPACING	24.0"	JREF- 1TQ38228Z01

(9-070--Freeman Design Group Hudson -- , ** - EJ7C)

Top chord 2x4 SP #2 Dense
Bot chord 2x4 SP #2 Dense

Roof overhang supports 2.00 psf soffit load.

Bottom chord checked for 10.00 psf non-concurrent live load.

110 mph wind, 15.00 ft mean hgt, ASCE 7-05, PART._ENC. bldg, not located within 4.50 ft from roof edge, CAT II, EXP B, wind TC DL=5.0 psf, wind BC DL=5.0 psf. Iw=1.00 GCpi(+/-)=0.55

Wind reactions based on MWFRS pressures.

Deflection meets L/240 live and L/180 total load.

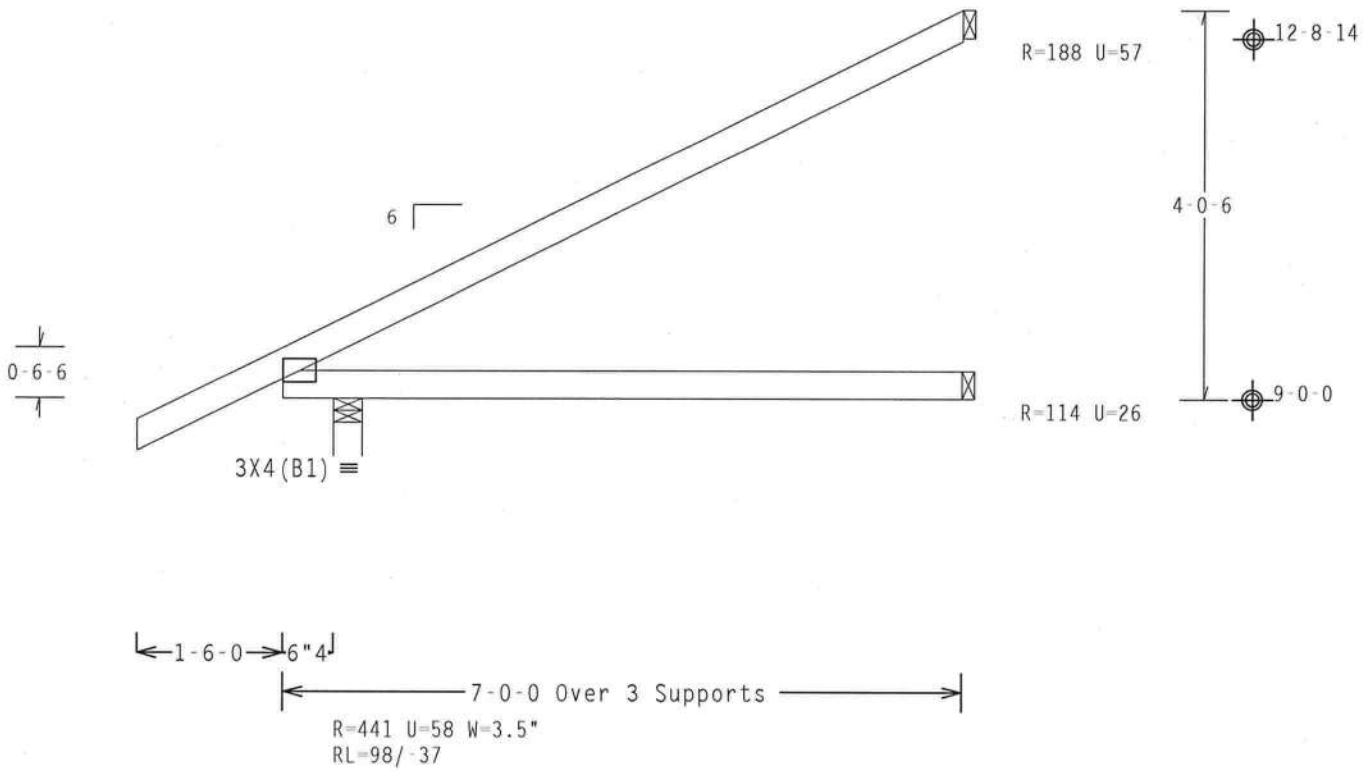

Design Crit: FBC2007Res/TPI-2002(STD)

PLT TYP. Wave | FT/RT=10%(0%)/0(0) | 8.07.00 | QTY:1 | FL/-/4/-/-/R/- | Scale =.5"/Ft.

ALPINE
ITW Building Components Group Inc.
Haines City, FL 33844
FL COA #0 278

WARNING TRUSSES REQUIRE EXTREME CARE IN FABRICATION, HANDLING, SHIPPING, INSTALLING AND BRACING. REFER TO BCSI (BUILDING COMPONENT SAFETY INFORMATION), PUBLISHED BY TPI (TRUSS PLATE INSTITUTE, 218 NORTH LEE STREET, SUITE 312, ALEXANDRIA, VA. 22314) AND WTCA (WOOD TRUSS COUNCIL OF AMERICA, 6300 ENTERPRISE LANE, MADISON, WI 53719) FOR SAFETY PRACTICES PRIOR TO PERFORMING THESE FUNCTIONS. UNLESS OTHERWISE INDICATED TOP CHORD SHALL HAVE PROPERLY ATTACHED STRUCTURAL PANELS AND BOTTOM CHORD SHALL HAVE A PROPERLY ATTACHED RIGID CEILING.

IMPORTANT FURNISH A COPY OF THIS DESIGN TO THE INSTALLATION CONTRACTOR. ITW BCG, INC. SHALL NOT BE RESPONSIBLE FOR ANY DEVIATION FROM THIS DESIGN; ANY FAILURE TO BUILD THE TRUSS IN CONFORMANCE WITH TPI; OR FABRICATING, HANDLING, SHIPPING, INSTALLING & BRACING OF TRUSSES.
DESIGN CONFORMS WITH APPLICABLE PROVISIONS OF NDS (NATIONAL DESIGN SPEC. BY AF&PA) AND TPI. ITW BCG CONNECTOR PLATES ARE MADE OF 20/18/16GA (W,H/SS/K) ASTM A653 GRADE 40/60 (W, K/H,SS) GALV. STEEL. APPLY PLATES TO EACH FACE OF TRUSS AND, UNLESS OTHERWISE LOCATED ON THIS DESIGN, POSITION PER DRAWINGS 160A-Z. ANY INSPECTION OF PLATES FOLLOWED BY (1) SHALL BE PER ANNEX A3 OF TPI1-2002 SEC.3. A SEAL ON THIS DRAWING INDICATES ACCEPTANCE OF PROFESSIONAL ENGINEERING RESPONSIBILITY SOLELY FOR THE TRUSS COMPONENT DESIGN SHOWN. THE SUITABILITY AND USE OF THIS COMPONENT FOR ANY BUILDING IS THE RESPONSIBILITY OF THE BUILDING DESIGNER PER ANSI/TPI 1 SEC. 2.

DOUGLAS FLEMING LICENSE No. 66648 STATE OF FLORIDA PROFESSIONAL ENGINEER

19 '09

TC LL	20.0 PSF	REF	R8228- 25860
TC DL	10.0 PSF	DATE	03/19/09
BC DL	10.0 PSF	DRW	HCUSR8228 09078046
BC LL	0.0 PSF	HC-ENG	DF/DF
TOT.LD.	40.0 PSF	SEQN-	9299
DUR.FAC.	1.25	FROM	AH
SPACING	24.0"	JREF-	1TQ38228Z01

(9-070--Freeman Design Group Hudson -- , ** - EJ7D)

Top chord 2x4 SP #2 Dense
Bot chord 2x4 SP #2 Dense

Roof overhang supports 2.00 psf soffit load.

Bottom chord checked for 10.00 psf non-concurrent live load.

110 mph wind, 15.00 ft mean hgt, ASCE 7-05, PART. ENC. bldg, not located within 4.50 ft from roof edge, CAT II, EXP B, wind TC DL=5.0 psf, wind BC DL=5.0 psf. Iw=1.00 GCpi(+/-)=0.55

Wind reactions based on MWFRS pressures.

Deflection meets L/240 live and L/180 total load.

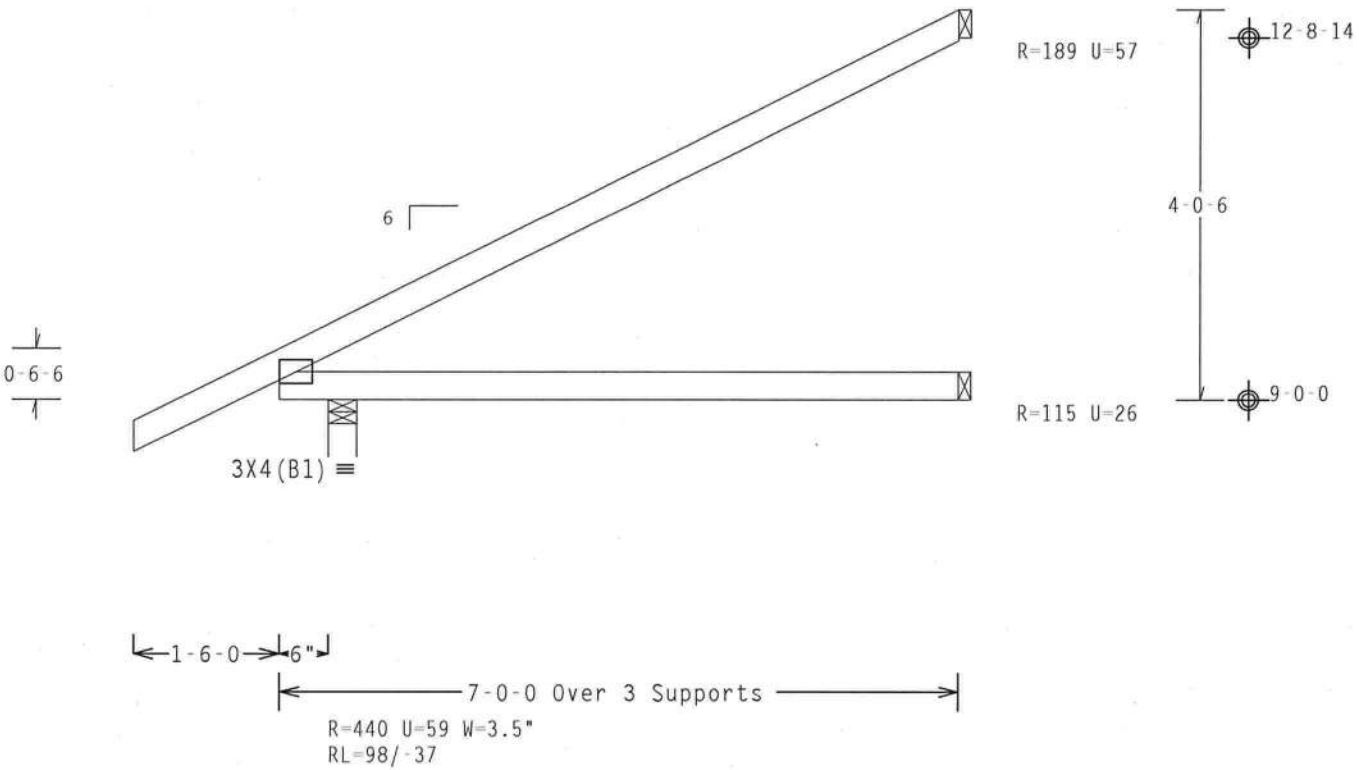

Design Crit: FBC2007Res/TPI-2002(STD)

PLT TYP. Wave | FT/RT=10%(0%)/0(0) | 8.07.00 | QTY:3 | FL/-/4/-/-/R/- | Scale =.5"/Ft.

ALPINE
ITW Building Components Group Inc.
Haines City, FL 33844
FL COA #0 278

WARNING TRUSSES REQUIRE EXTREME CARE IN FABRICATION, HANDLING, SHIPPING, INSTALLING AND BRACING. REFER TO BCSI (BUILDING COMPONENT SAFETY INFORMATION), PUBLISHED BY TPI (TRUSS PLATE INSTITUTE, 218 NORTH LEE STREET, SUITE 312, ALEXANDRIA, VA, 22314) AND WTCA (WOOD TRUSS COUNCIL OF AMERICA, 6300 ENTERPRISE LANE, MADISON, WI 53719) FOR SAFETY PRACTICES PRIOR TO PERFORMING THESE FUNCTIONS. UNLESS OTHERWISE INDICATED TOP CHORD SHALL HAVE PROPERLY ATTACHED STRUCTURAL PANELS AND BOTTOM CHORD SHALL HAVE A PROPERLY ATTACHED RIGID CEILING.

IMPORTANTFURNISH A COPY OF THIS DESIGN TO THE INSTALLATION CONTRACTOR. ITW BCG, INC. SHALL NOT BE RESPONSIBLE FOR ANY DEVIATION FROM THIS DESIGN; ANY FAILURE TO BUILD THE TRUSS IN COMFORMANCE WITH TPI; OR FABRICATING, HANDLING, SHIPPING, INSTALLING & BRACING OF TRUSSES. DESIGN CONFORMS WITH APPLICABLE PROVISIONS OF NDS (NATIONAL DESIGN SPEC. BY AF&PA) AND TPI. ITW BCG CONNECTOR PLATES ARE MADE OF 20/18/16GA (W,H/SS/K) ASTM A653 GRADE 40/60 (W, K/H,SS) GALV. STEEL. APPLY PLATES TO EACH FACE OF TRUSS AND, UNLESS OTHERWISE LOCATED ON THIS DESIGN, POSITION PER DRAWINGS 160A-Z. ANY INSPECTION OF PLATES FOLLOWED BY (1) SHALL BE PER ANNEX A3 OF TPI1-2002 SEC.3. A SEAL ON THIS DRAWING INDICATES ACCEPTANCE OF PROFESSIONAL ENGINEERING RESPONSIBILITY SOLELY FOR THE TRUSS COMPONENT DESIGN SHOWN. THE SUITABILITY AND USE OF THIS COMPONENT FOR ANY BUILDING IS THE RESPONSIBILITY OF THE BUILDING DESIGNER PER ANSI/TPI 1 SEC. 2.

DOUGLAS FLEMING LICENSE No. 66648 STATE OF FLORIDA PROFESSIONAL ENGINEER
19 '09

TC LL	20.0 PSF	REF	R8228- 25861
TC DL	10.0 PSF	DATE	03/19/09
BC DL	10.0 PSF	DRW	HCUSR8228 09078047
BC LL	0.0 PSF	HC-ENG	DF/DF
TOT.LD.	40.0 PSF	SEQN-	9302
DUR.FAC.	1.25	FROM	AH
SPACING	24.0"	JREF-	1TQ38228Z01

(9-070--Freeman Design Group Hudson -- , ** - EJ7E)

Top chord 2x4 SP #2 Dense
Bot chord 2x4 SP #2 Dense

Bottom chord checked for 10.00 psf non-concurrent live load.

Deflection meets L/240 live and L/180 total load.

110 mph wind, 15.00 ft mean hgt, ASCE 7-05, PART._ENC. bldg, not located within 4.50 ft from roof edge, CAT II, EXP B, wind TC DL=5.0 psf, wind BC DL=5.0 psf. Iw=1.00 GCpi(+/-)=0.55

Wind reactions based on MWFRS pressures.

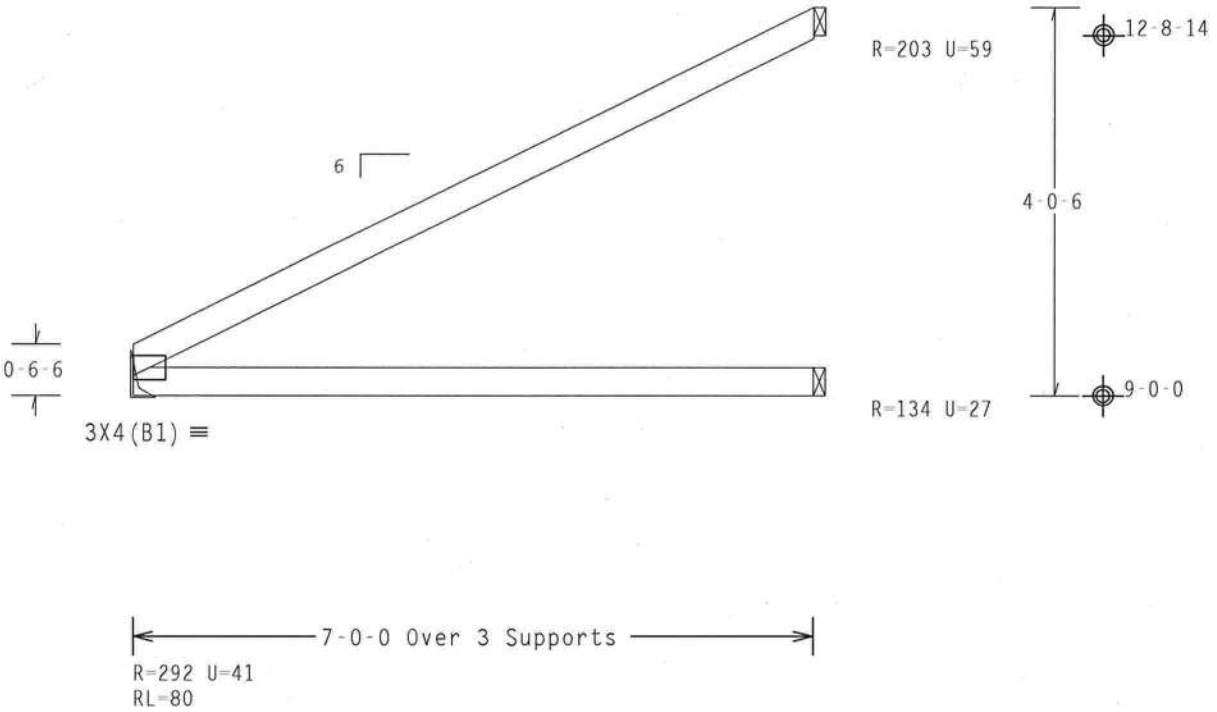

Design Crit: FBC2007Res/TPI-2002(STD)

PLT TYP. Wave | FT/RT=10%(0%)/0(0) | 8.07.00 | QTY:1 | FL/-/4/-/-/R/- | Scale =.5"/Ft.

ALPINE
ITW Building Components Group Inc.
Haines City, FL 33844
FL COA #0 278

WARNING TRUSSES REQUIRE EXTREME CARE IN FABRICATION, HANDLING, SHIPPING, INSTALLING AND BRACING. REFER TO BCSI (BUILDING COMPONENT SAFETY INFORMATION), PUBLISHED BY TPI (TRUSS PLATE INSTITUTE, 218 NORTH LEE STREET, SUITE 312, ALEXANDRIA, VA, 22314) AND WTCA (WOOD TRUSS COUNCIL OF AMERICA, 6300 ENTERPRISE LANE, MADISON, WI 53719) FOR SAFETY PRACTICES PRIOR TO PERFORMING THESE FUNCTIONS. UNLESS OTHERWISE INDICATED TOP CHORD SHALL HAVE PROPERLY ATTACHED STRUCTURAL PANELS AND BOTTOM CHORD SHALL HAVE A PROPERLY ATTACHED RIGID CEILING.

IMPORTANTFURNISH A COPY OF THIS DESIGN TO THE INSTALLATION CONTRACTOR. ITW BCG, INC. SHALL NOT BE RESPONSIBLE FOR ANY DEVIATION FROM THIS DESIGN; ANY FAILURE TO BUILD THE TRUSS IN COMFORMANCE WITH TPI; OR FABRICATING, HANDLING, SHIPPING, INSTALLING & BRACING OF TRUSSES.
DESIGN CONFORMS WITH APPLICABLE PROVISIONS OF NDS (NATIONAL DESIGN SPEC. BY AF&PA) AND TPI. ITW BCG CONNECTOR PLATES ARE MADE OF 20/18/16GA (W,H/SS/K) ASTM A653 GRADE 40/60 (W, K/H,SS) GALV. STEEL. APPLY PLATES TO EACH FACE OF TRUSS AND, UNLESS OTHERWISE LOCATED ON THIS DESIGN, POSITION PER DRAWINGS 160A-Z. ANY INSPECTION OF PLATES FOLLOWED BY (I) SHALL BE PER ANNEX A3 OF TPI1-2002 SEC.3. A SEAL ON THIS DRAWING INDICATES ACCEPTANCE OF PROFESSIONAL ENGINEERING RESPONSIBILITY SOLELY FOR THE TRUSS COMPONENT DESIGN SHOWN. THE SUITABILITY AND USE OF THIS COMPONENT FOR ANY BUILDING IS THE RESPONSIBILITY OF THE BUILDING DESIGNER PER ANSI/TPI 1 SEC. 2.

DOUGLAS FLEMING LICENSE No. 66648 STATE OF FLORIDA PROFESSIONAL ENGINEER
19 '09

TC LL	20.0 PSF	REF R8228- 25862
TC DL	10.0 PSF	DATE 03/19/09
BC DL	10.0 PSF	DRW HCUSR8228 09078048
BC LL	0.0 PSF	HC-ENG DF/DF
TOT.LD.	40.0 PSF	SEQN- 9305
DUR.FAC.	1.25	FROM AH
SPACING	24.0"	JREF- 1TQ38228Z01

(9-070--Freeman Design Group Hudson -- , ** - PB1)

Top chord 2x4 SP #2 Dense
Bot chord 2x4 SP #2 Dense
Webs 2x4 SP #3

(**) 2 plate(s) require special positioning. Refer to scaled plate plot details for special positioning requirements.

110 mph wind, 20.53 ft mean hgt, ASCE 7-05, CLOSED bldg, not located within 4.50 ft from roof edge, CAT II, EXP B, wind TC DL=5.0 psf, wind BC DL=2.0 psf. Iw=1.00 GCpi(+/-)=0.18

Wind reactions based on MWFRS pressures.

Refer to DWG PB1200109 for piggyback details.

SPECIAL LOADS
------(LUMBER DUR.FAC.=1.25 / PLATE DUR.FAC.=1.25)

TC - From	62 PLF	at	0.00	to	62 PLF	at	2.00
TC - From	62 PLF	at	2.00	to	62 PLF	at	8.00
TC - From	62 PLF	at	8.00	to	62 PLF	at	10.00
BC - From	4 PLF	at	0.00	to	4 PLF	at	10.00

In lieu of structural panels use purlins to brace all flat TC @ 24" OC.

Deflection meets L/240 live and L/180 total load.

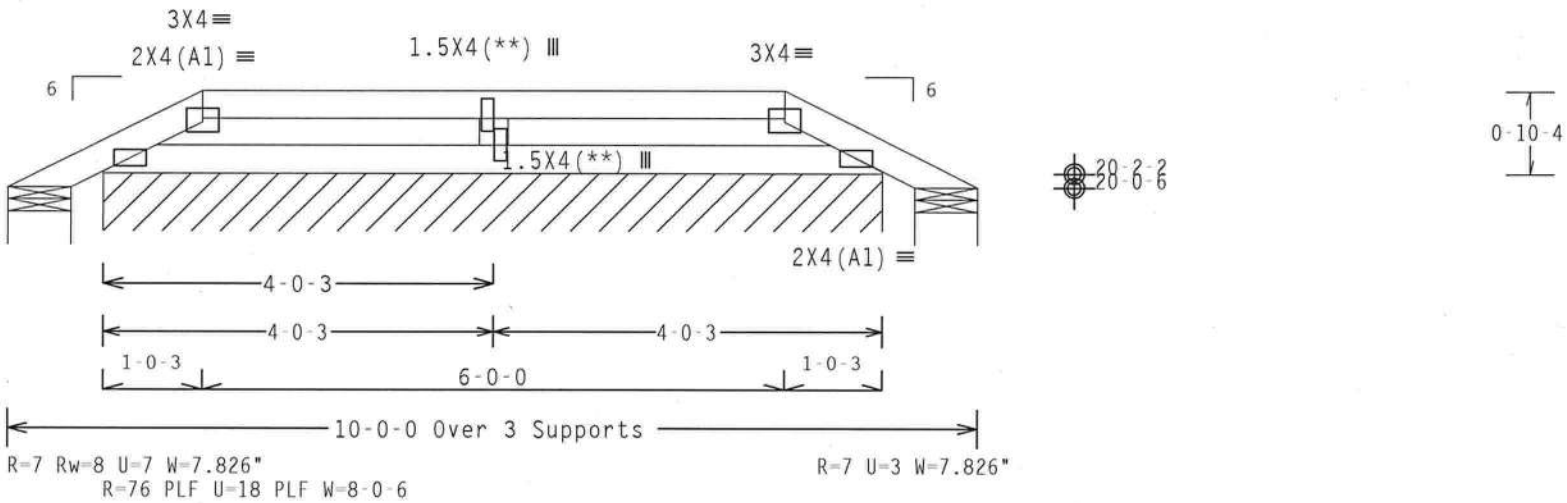

Design Crit: FBC2007Res/TPI-2002(STD)
FT/RT=10%(0%)/0(0)

PLT TYP. Wave | 8.07.00 | QTY:2 | FL/-/4/-/-/R/- | Scale =.5"/Ft.

ALPINE
ITW Building Components Group Inc.
Haines City, FL 33844
FL COA #0 278

WARNING TRUSSES REQUIRE EXTREME CARE IN FABRICATION, HANDLING, SHIPPING, INSTALLING AND BRACING. REFER TO BCSI (BUILDING COMPONENT SAFETY INFORMATION), PUBLISHED BY TPI (TRUSS PLATE INSTITUTE, 218 NORTH LEE STREET, SUITE 312, ALEXANDRIA, VA. 22314) AND WTCA (WOOD TRUSS COUNCIL OF AMERICA, 6300 ENTERPRISE LANE, MADISON, WI 53719) FOR SAFETY PRACTICES PRIOR TO PERFORMING THESE FUNCTIONS. UNLESS OTHERWISE INDICATED TOP CHORD SHALL HAVE PROPERLY ATTACHED STRUCTURAL PANELS AND BOTTOM CHORD SHALL HAVE A PROPERLY ATTACHED RIGID CEILING.

IMPORTANTFURNISH A COPY OF THIS DESIGN TO THE INSTALLATION CONTRACTOR. ITW BCG, INC. SHALL NOT BE RESPONSIBLE FOR ANY DEVIATION FROM THIS DESIGN; ANY FAILURE TO BUILD THE TRUSS IN CONFORMANCE WITH TPI; OR FABRICATING, HANDLING, SHIPPING, INSTALLING & BRACING OF TRUSSES. DESIGN CONFORMS WITH APPLICABLE PROVISIONS OF NDS (NATIONAL DESIGN SPEC. BY AF&PA) AND TPI. ITW BCG CONNECTOR PLATES ARE MADE OF 20/18/16GA (W,H/SS/K) ASTM A653 GRADE 40/60 (W, K/H,SS) GALV. STEEL. APPLY PLATES TO EACH FACE OF TRUSS AND, UNLESS OTHERWISE LOCATED ON THIS DESIGN, POSITION PER DRAWINGS 160A-Z. ANY INSPECTION OF PLATES FOLLOWED BY (I) SHALL BE PER ANNEX A3 OF TPI1-2002 SEC.3. A SEAL ON THIS DRAWING INDICATES ACCEPTANCE OF PROFESSIONAL ENGINEERING RESPONSIBILITY SOLELY FOR THE TRUSS COMPONENT DESIGN SHOWN. THE SUITABILITY AND USE OF THIS COMPONENT FOR ANY BUILDING IS THE RESPONSIBILITY OF THE BUILDING DESIGNER PER ANSI/TPI 1 SEC. 2.

DOUGLAS FLEMING LICENSE No. 66648 STATE OF FLORIDA PROFESSIONAL ENGINEER
Mar 19 '09

TC LL	20.0 PSF	REF R8228- 25863
TC DL	10.0 PSF	DATE 03/19/09
BC DL	10.0 PSF	DRW HCUSR8228 09078049
BC LL	0.0 PSF	HC-ENG DF/DF
TOT.LD.	40.0 PSF	SEQN- 9545
DUR.FAC.	1.25	FROM AH
SPACING	24.0"	JREF- 1TQ38228Z01

(9-070--Freeman Design Group Hudson -- , ** - PB2)

Top chord 2x4 SP #2 Dense
Bot chord 2x4 SP #2 Dense
Webs 2x4 SP #3

110 mph wind, 21.03 ft mean hgt, ASCE 7-05, CLOSED bldg, not located within 4.50 ft from roof edge, CAT II, EXP B, wind TC DL=5.0 psf, wind BC DL=2.0 psf. Iw=1.00 GCpi(+/-)=0.18

Wind reactions based on MWFRS pressures.

Deflection meets L/240 live and L/180 total load.

Refer to DWG PB1200109 for piggyback details.

SPECIAL LOADS
------(LUMBER DUR.FAC.=1.25 / PLATE DUR.FAC.=1.25)

TC - From	62 PLF	at	0.00	to	62 PLF	at	4.00
TC - From	62 PLF	at	4.00	to	62 PLF	at	6.00
TC - From	62 PLF	at	6.00	to	62 PLF	at	10.00
BC - From	4 PLF	at	0.00	to	4 PLF	at	10.00

In lieu of structural panels or rigid ceiling use purlins to brace all flat TC @ 24" OC, all BC @ 24" OC.

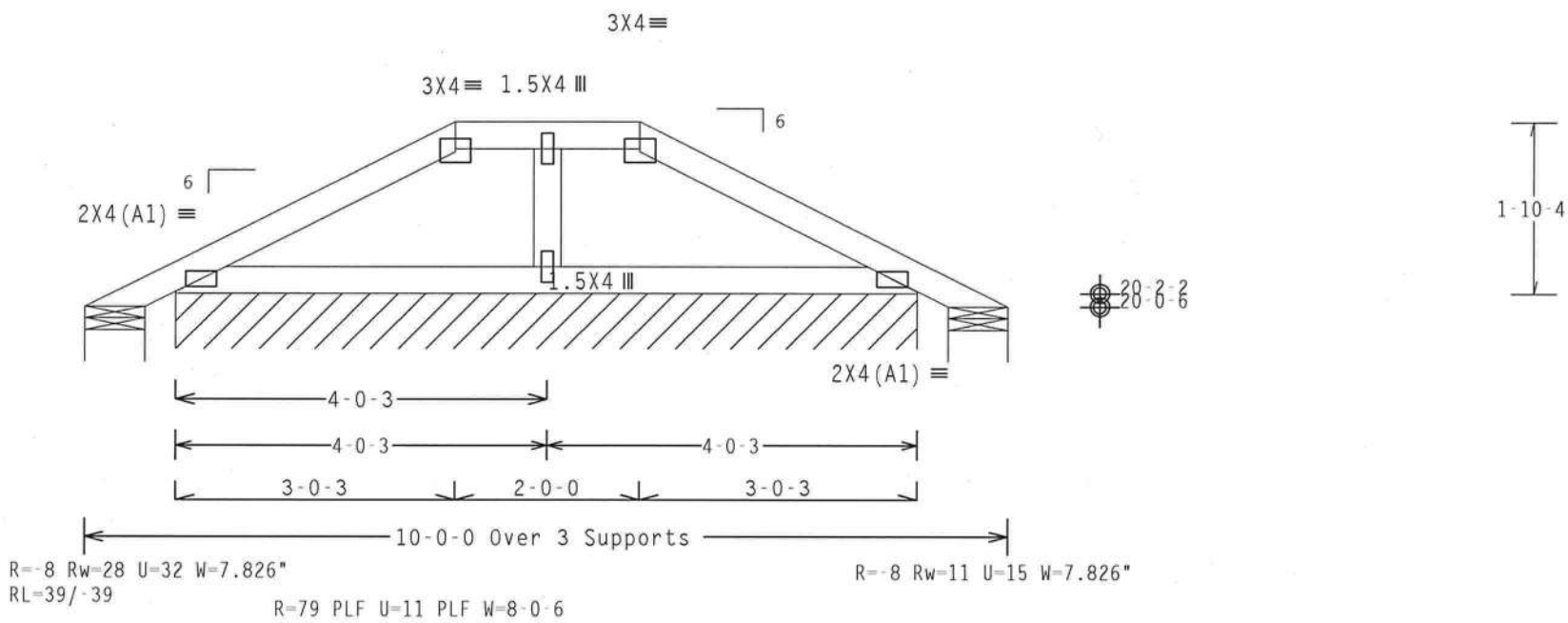

Design Crit: FBC2007Res/TPI-2002(STD)

PLT TYP. Wave | FT/RT=10%(0%)/0(0) | 8.07.00 | QTY:2 | FL/-/4/-/-/R/- | Scale =.5"/Ft.

ALPINE
ITW Building Components Group Inc.
Haines City, FL 33844
FL COA #0 278

WARNING TRUSSES REQUIRE EXTREME CARE IN FABRICATION, HANDLING, SHIPPING, INSTALLING AND BRACING. REFER TO BCSI (BUILDING COMPONENT SAFETY INFORMATION), PUBLISHED BY TPI (TRUSS PLATE INSTITUTE, 218 NORTH LEE STREET, SUITE 312, ALEXANDRIA, VA. 22314) AND WTCA (WOOD TRUSS COUNCIL OF AMERICA, 6300 ENTERPRISE LANE, MADISON, WI 53719) FOR SAFETY PRACTICES PRIOR TO PERFORMING THESE FUNCTIONS. UNLESS OTHERWISE INDICATED TOP CHORD SHALL HAVE PROPERLY ATTACHED STRUCTURAL PANELS AND BOTTOM CHORD SHALL HAVE A PROPERLY ATTACHED RIGID CEILING.

IMPORTANTFURNISH A COPY OF THIS DESIGN TO THE INSTALLATION CONTRACTOR. ITW BCG, INC. SHALL NOT BE RESPONSIBLE FOR ANY DEVIATION FROM THIS DESIGN; ANY FAILURE TO BUILD THE TRUSS IN COMFORMANCE WITH TPI; OR FABRICATING, HANDLING, SHIPPING, INSTALLING & BRACING OF TRUSSES. DESIGN CONFORMS WITH APPLICABLE PROVISIONS OF NDS (NATIONAL DESIGN SPEC. BY AF&PA) AND TPI. ITW BCG CONNECTOR PLATES ARE MADE OF 20/18/16GA (W,H/SS/K) ASTM A653 GRADE 40/60 (W, K/H,SS) GALV. STEEL. APPLY PLATES TO EACH FACE OF TRUSS AND, UNLESS OTHERWISE LOCATED ON THIS DESIGN, POSITION PER DRAWINGS 160A-Z. ANY INSPECTION OF PLATES FOLLOWED BY (1) SHALL BE PER ANNEX A3 OF TPI1-2002 SEC.3. A SEAL ON THIS DRAWING INDICATES ACCEPTANCE OF PROFESSIONAL ENGINEERING RESPONSIBILITY SOLELY FOR THE TRUSS COMPONENT DESIGN SHOWN. THE SUITABILITY AND USE OF THIS COMPONENT FOR ANY BUILDING IS THE RESPONSIBILITY OF THE BUILDING DESIGNER PER ANSI/TPI 1 SEC. 2.

DOUGLAS FLEMING LICENSE No. 66648 STATE OF FLORIDA PROFESSIONAL ENGINEER

19 '09

TC LL	20.0 PSF	REF R8228- 25864
TC DL	10.0 PSF	DATE 03/19/09
BC DL	10.0 PSF	DRW HCUSR8228 09078050
BC LL	0.0 PSF	HC-ENG DF/DF
TOT.LD.	40.0 PSF	SEQN- 9547
DUR.FAC.	1.25	FROM AH
SPACING	24.0"	JREF- 1TQ38228Z01

(9-070--Freeman Design Group Hudson -- , ** - PB3)

Top chord 2x4 SP #2 Dense
Bot chord 2x4 SP #2 Dense
Webs 2x4 SP #3

110 mph wind, 21.28 ft mean hgt, ASCE 7-05, CLOSED bldg, not located within 4.50 ft from roof edge, CAT II, EXP B, wind TC DL=5.0 psf, wind BC DL=2.0 psf. Iw=1.00 GCpi(+/-)=0.18

Wind reactions based on MWFRS pressures.

Refer to DWG PB1200109 for piggyback details.

SPECIAL LOADS
------(LUMBER DUR.FAC.=1.25 / PLATE DUR.FAC.=1.25)

TC - From	62 PLF	at	0.00	to	62 PLF	at	5.00
TC - From	62 PLF	at	5.00	to	62 PLF	at	10.00
BC - From	4 PLF	at	0.00	to	4 PLF	at	10.00

In lieu of rigid ceiling use purlins to brace BC @ 24" OC.

Deflection meets L/240 live and L/180 total load.

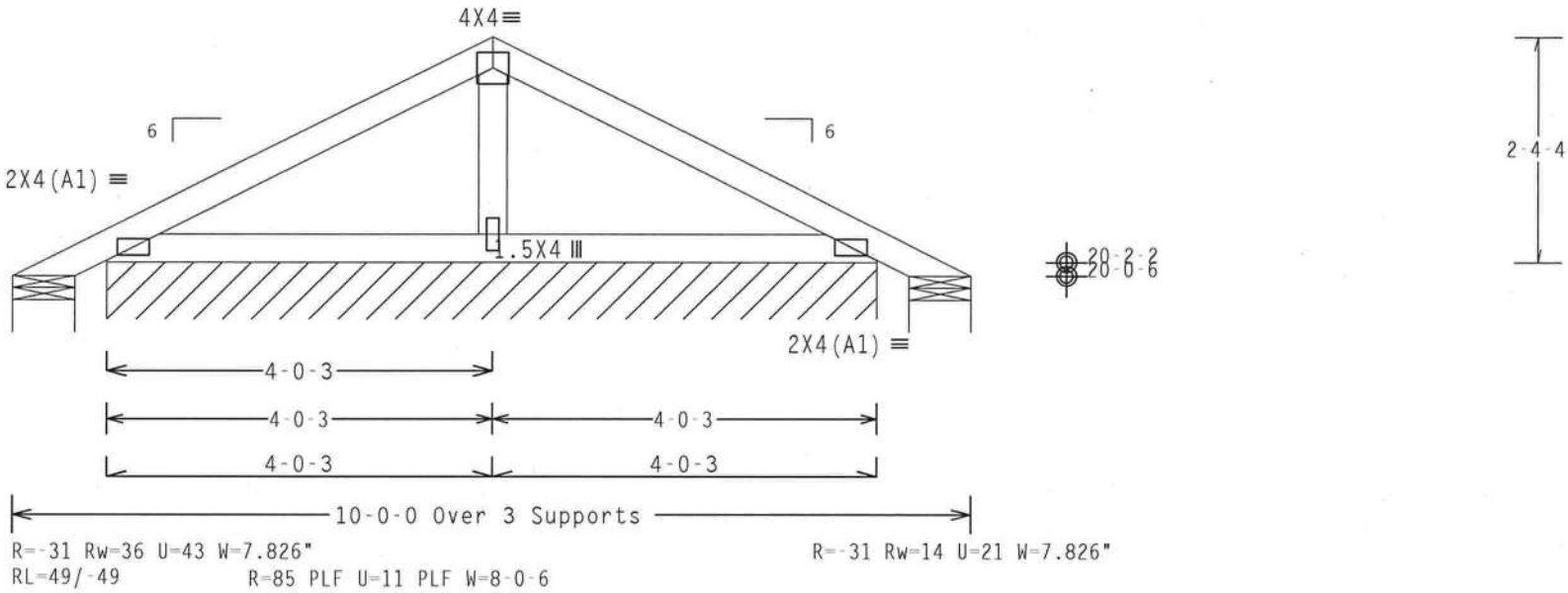

Design Crit: FBC2007Res/TPI-2002(STD)

PLT TYP. Wave | FT/RT=10%(0%)/0(0) | 8.07.00 | QTY:6 | FL/-/4/-/-/R/- | Scale =.5"/Ft.

ALPINE
ITW Building Components Group Inc.
Haines City, FL 33844
FL COA #0 278

WARNING TRUSSES REQUIRE EXTREME CARE IN FABRICATION, HANDLING, SHIPPING, INSTALLING AND BRACING. REFER TO BCSI (BUILDING COMPONENT SAFETY INFORMATION), PUBLISHED BY TPI (TRUSS PLATE INSTITUTE, 218 NORTH LEE STREET, SUITE 312, ALEXANDRIA, VA, 22314) AND WTCA (WOOD TRUSS COUNCIL OF AMERICA, 6300 ENTERPRISE LANE, MADISON, WI 53719) FOR SAFETY PRACTICES PRIOR TO PERFORMING THESE FUNCTIONS. UNLESS OTHERWISE INDICATED TOP CHORD SHALL HAVE PROPERLY ATTACHED STRUCTURAL PANELS AND BOTTOM CHORD SHALL HAVE A PROPERLY ATTACHED RIGID CEILING.

IMPORTANTFURNISH A COPY OF THIS DESIGN TO THE INSTALLATION CONTRACTOR. ITW BCG, INC. SHALL NOT BE RESPONSIBLE FOR ANY DEVIATION FROM THIS DESIGN; ANY FAILURE TO BUILD THE TRUSS IN CONFORMANCE WITH TPI; OR FABRICATING, HANDLING, SHIPPING, INSTALLING & BRACING OF TRUSSES. DESIGN CONFORMS WITH APPLICABLE PROVISIONS OF NDS (NATIONAL DESIGN SPEC. BY AF&PA) AND TPI. ITW BCG CONNECTOR PLATES ARE MADE OF 20/18/16GA (W,H/SS/K) ASTM A653 GRADE 40/60 (W, K/H,SS) GALV. STEEL. APPLY PLATES TO EACH FACE OF TRUSS AND, UNLESS OTHERWISE LOCATED ON THIS DESIGN, POSITION PER DRAWINGS 160A-Z. ANY INSPECTION OF PLATES FOLLOWED BY (1) SHALL BE PER ANNEX A3 OF TPI1-2002 SEC.3. A SEAL ON THIS DRAWING INDICATES ACCEPTANCE OF PROFESSIONAL ENGINEERING RESPONSIBILITY SOLELY FOR THE TRUSS COMPONENT DESIGN SHOWN. THE SUITABILITY AND USE OF THIS COMPONENT FOR ANY BUILDING IS THE RESPONSIBILITY OF THE BUILDING DESIGNER PER ANSI/TPI 1 SEC. 2.

DOUGLAS FLEMING LICENSE No. 66648 STATE OF FLORIDA PROFESSIONAL ENGINEER

19 '09

TC LL	20.0 PSF	REF	R8228- 25865
TC DL	10.0 PSF	DATE	03/19/09
BC DL	10.0 PSF	DRW	HCUSR8228 09078051
BC LL	0.0 PSF	HC-ENG	DF/DF
TOT.LD.	40.0 PSF	SEQN-	9549
DUR.FAC.	1.25	FROM	AH
SPACING	24.0"	JREF-	1TQ38228Z01

CLB WEB BRACE SUBSTITUTION

THIS DETAIL IS TO BE USED WHEN CONTINUOUS LATERAL BRACING (CLB) IS SPECIFIED ON A TRUSS DESIGN BUT AN ALTERNATIVE WEB BRACING METHOD IS DESIRED.

NOTES:

THIS DETAIL IS ONLY APPLICABLE FOR CHANGING THE SPECIFIED CLB SHOWN ON SINGLE PLY SEALED DESIGNS TO T-BRACING OR SCAB BRACING.

ALTERNATIVE BRACING SPECIFIED IN CHART BELOW MAY BE CONSERVATIVE. FOR MINIMUM ALTERNATIVE BRACING, RE-RUN DESIGN WITH APPROPRIATE BRACING.

WEB MEMBER SIZE	SPECIFIED CLB BRACING	ALTERNATIVE BRACING T OR L-BRACE	ALTERNATIVE BRACING SCAB BRACE
2X3 OR 2X4	1 ROW	2X4	1-2X4
2X3 OR 2X4	2 ROWS	2X6	2-2X4
2X6	1 ROW	2X4	1-2X6
2X6	2 ROWS	2X6	2-2X4(*)
2X8	1 ROW	2X6	1-2X8
2X8	2 ROWS	2X6	2-2X6(*)

T-BRACE, L-BRACE AND SCAB BRACE TO BE SAME SPECIES AND GRADE OR BETTER THAN WEB MEMBER UNLESS SPECIFIED OTHERWISE ON ENGINEER'S SEALED DESIGN.

(*) CENTER SCAB ON WIDE FACE OF WEB. APPLY (1) SCAB TO EACH FACE OF WEB.

T-BRACING OR L-BRACING:

APPLY TO EITHER SIDE OF WEB NARROW FACE.
ATTACH WITH 10d BOX OR GUN (0.128"x 3.",MIN) NAILS.
AT 6" O.C.
BRACE IS A MINIMUM 80% OF WEB MEMBER LENGTH

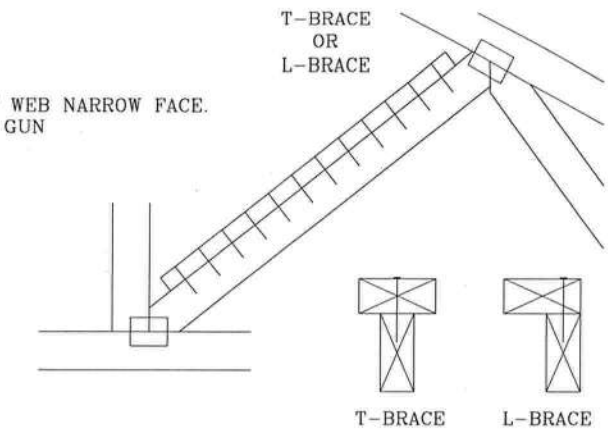

SCAB BRACING:

APPLY SCAB(S) TO WIDE FACE OF WEB.
NO MORE THAN (1) SCAB PER FACE.
ATTACH WITH 10d BOX OR GUN (0.128"x 3.",MIN) NAILS.
AT 6" O.C.
BRACE IS A MINIMUM 80% OF WEB MEMBER LENGTH

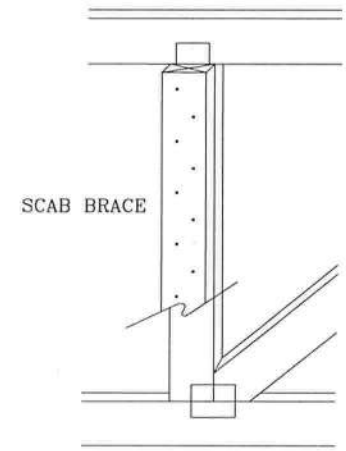

TW Building Components Group Inc.
Earth City, MO 63045

DOUGLAS FLEMING LICENSE No. 66648 STATE OF FLORIDA PROFESSIONAL ENGINEER
Mar 19 '09

TC LL	PSF	REF CLB SUBST.
TC DL	PSF	DATE 1/1/09
BC DL	PSF	DRWG BRCLBSUB0109
BC LL	PSF	
TOT. LD.	PSF	
DUR. FAC.		
SPACING		

120 PIGGYBACK DETAIL

UP TO 120 MPH WIND, 30.00 FT MEAN HGT, ASCE 7-02 OR ASCE 7-05, ENCLOSED BLDG. LOCATED ANYWHERE IN ROOF, CAT II, EXP C, WIND DL= 5.0 PSF KZT=1.0.

MAXIMUM TRUSS SPACING IS 24" O.C.
DETAIL IS NOT APPLICABLE IF CAP SUPPORTS ADDITIONAL LOADS SUCH AS CUPOLA, STEEPLE, CHIMNEY OR DRAG STRUT LOADS.

NOTE: TOP CHORDS OF TRUSSES SUPPORTING PIGGYBACK CAP TRUSSES MUST BE ADEQUATELY BRACED BY SHEATHING OR PURLINS. THE BUILDING ENGINEER OF RECORD SHALL PROVIDE DIAGONAL BRACING OR OTHER SUITABLE ANCHORAGE TO PERMANENTLY RESTRAIN PURLINS.

** REFER TO ENGINEER'S SEALED TRUSS DESIGN DRAWING FOR PIGGYBACK AND BASE TRUSS SPECIFICATIONS.

DETAIL A

PIGGYBACK CAP TRUSS SLANT NAILED TO ALL TOP CHORD PURLIN BRACING WITH (2) 16d BOX NAILS (0.135"x3.5") AND SECURE TOP CHORD WITH 2X4 #3 GRADE SCAB (1 SIDE ONLY AT EACH END) ATTACHED WITH 2 ROWS OF 10d BOX NAILS (0.128"x3.0") AT 4" O.C.

ATTACH PURLIN BRACING TO THE FLAT TOP CHORD USING (2) 16d BOX NAILS (0.135"x3.5")

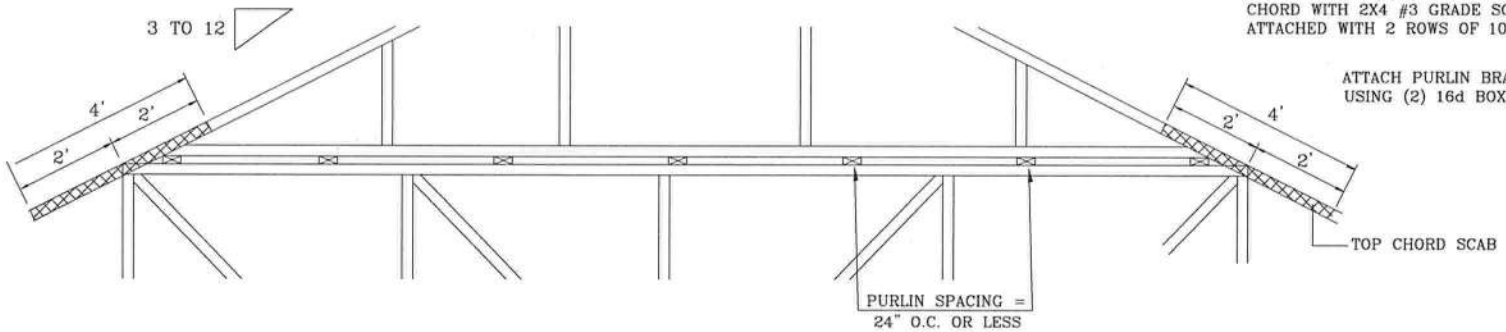

DETAIL B

PIGGYBACK CAP TRUSS SLANT NAILED TO ALL TOP CHORD PURLIN BRACING WITH (2) 16d BOX NAILS (0.135"x3.5") AND SECURE TOP CHORD WITH 2X4 #3 GRADE SCAB (1 SIDE ONLY AT EACH END) ATTACHED WITH 2 ROWS OF 10d BOX NAILS (0.128"x3.0") AT 4" O.C.

ATTACH PURLIN BRACING TO THE FLAT TOP CHORD USING (2) 16d BOX NAILS (0.135"x3.5")

PIGGYBACK CAP TRUSS NAILED TO TOP CHORD OF BASE TRUSS AND SECURED WITH 2x4 SPF#2, FULL CHORD DEPTH SCABS @ 8' O.C. EACH FACE, STAGGERED 4' O.C. ATTACH WITH 3 10d BOX NAILS (0.128"x3") INTO BOTH CHORDS (TOTAL OF 6 NAILS PER SCAB) AS SHOWN BY CIRCLED NUMBER.

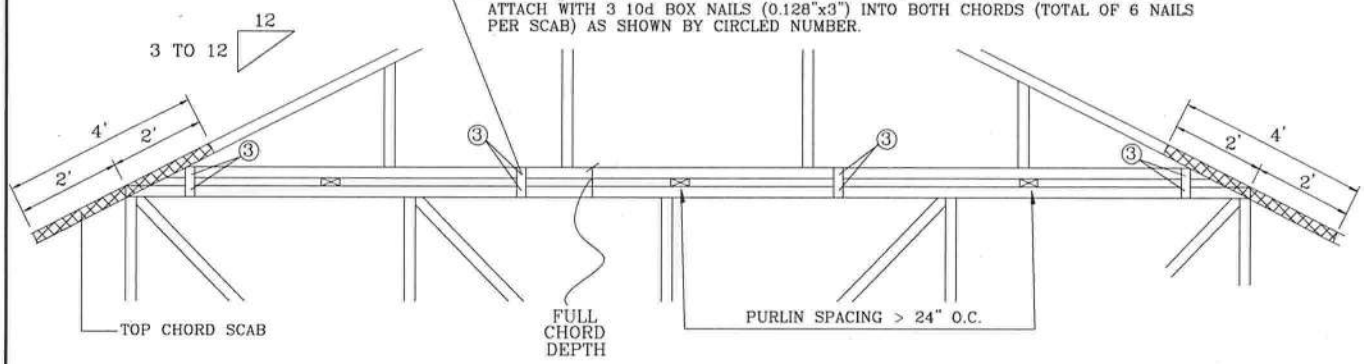

ALTERNATE ATTACHMENTS
TRULOX USE 3x8 TRULOX PLATES FOR 2x4 CHORD MEMBER, AND 3x10 TRULOX PLATES FOR 2x6 AND LARGER CHORD MEMBERS. ATTACH TO EACH FACE @ 8' O.C. WITH (4) 0.120"x1.375" NAILS INTO CAP BOTTOM CHORD AND (4) IN BASE TRUSS TOP CHORD. TRULOX PLATES MAY BE STAGGERED 4' O.C. FRONT TO BACK FACES.
PLYWOOD GUSSET 8"x8"x1/2" RATED SHEATHING GUSSETS (EACH FACE). ATTACH @ 8' O.C. WITH (8) 6d COMMON (0.113"x2") NAILS PER GUSSET, (4) IN CAP BOTTOM CHORD AND (4) IN BASE TRUSS TOP CHORD. GUSSETS MAY BE STAGGERED 4' O.C. FRONT TO BACK FACES.

ITW Building Components Group Inc.

Earth City, MO 63045

WARNING READ AND FOLLOW ALL NOTES ON THIS SHEET!
Trusses require extreme care in fabricating, handling, shipping, installing and bracing. Refer to and follow BCSI (Building Component Safety Information, by TPI and WTCA) for safety practices prior to performing these functions. Installers shall provide temporary bracing per BCSI. Unless noted otherwise, top chord shall have properly attached structural panels and bottom chord shall have a properly attached rigid ceiling. Locations shown for permanent lateral restraint of webs shall have bracing installed per BCSI sections B3 & B7. See this job's general notes page for more information.

IMPORTANT FURNISH COPY OF THIS DESIGN TO INSTALLATION CONTRACTOR.
ITW Building Components Group Inc. (ITWBCG) shall not be responsible for any deviation from this design, any failure to build the truss in conformance with TPI, or fabricating, handling, shipping, installing & bracing of trusses. ITWBCG connector plates are made of 20/18/16GA (W,H/S/K) ASTM A653 grade 37/40/60 (K/W/H,S) galv. steel. Apply plates to each face of truss, positioned as shown above and on Joint Details. A seal on this drawing or cover page indicates acceptance and professional engineering responsibility solely for the truss component design shown. The suitability and use of this component for any building is the responsibility of the Building Designer per ANST/TPI 1 Sec. 2.
ITW-BCG: www.itwbcg.com; TPI: www.tpinst.com; WTCA: www.sbcindustry.com; ICC: www.iccsafe.org

DOUGLAS FLEMING
LICENSE
No. 66648
STATE OF FLORIDA
PROFESSIONAL ENGINEER
Mar 19 '09

SPACING 24.0"

REF	PIGGYBACK
DATE	1/1/09
DRWG	PB1200109

(9-070--Freeman Design Group Hudson -- , ** - HJ7)

Top chord 2x4 SP #2 Dense
Bot chord 2x4 SP #2 Dense
Webs 2x4 SP #3

Hipjack supports 7-0-0 setback jacks with no webs.

Deflection meets L/240 live and L/180 total load.

110 mph wind, 15.00 ft mean hgt, ASCE 7-05, CLOSED bldg, Located anywhere in roof, CAT II, EXP B, wind TC DL=5.0 psf, wind BC DL=5.0 psf. Iw=1.00 GCpi(+/-)=0.18

Wind reactions based on MWFRS pressures.

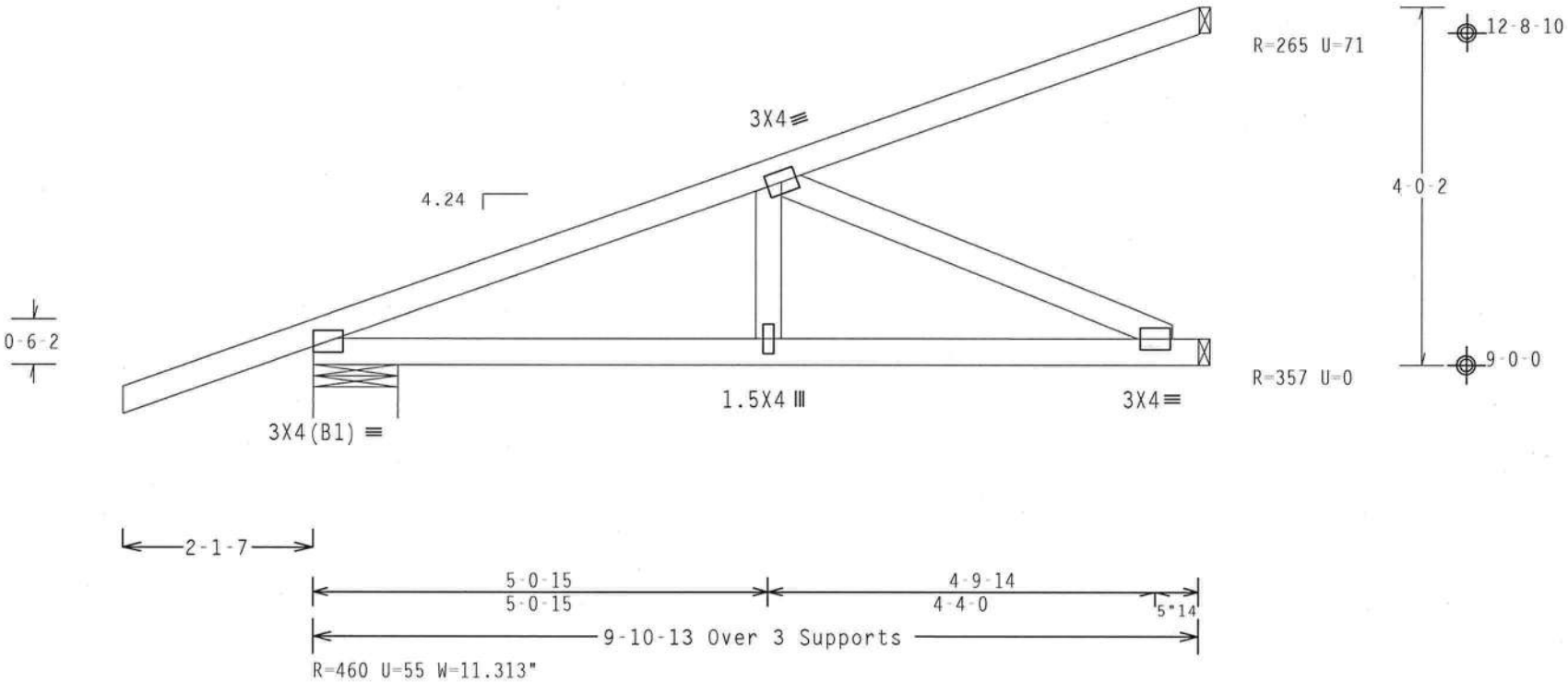

Design Crit: FBC2007Res/TPI-2002(STD)

PLT TYP. Wave | FT/RT=10%(0%)/0(0) | 8.07.00 | QTY:4 | FL/-/4/-/-/R/- | Scale =.5"/Ft.

ALPINE
ITW Building Components Group Inc.
Haines City, FL 33844
FL COA #0 278

WARNING TRUSSES REQUIRE EXTREME CARE IN FABRICATION, HANDLING, SHIPPING, INSTALLING AND BRACING. REFER TO BCSI (BUILDING COMPONENT SAFETY INFORMATION), PUBLISHED BY TPI (TRUSS PLATE INSTITUTE, 218 NORTH LEE STREET, SUITE 312, ALEXANDRIA, VA. 22314) AND WTCA (WOOD TRUSS COUNCIL OF AMERICA, 6300 ENTERPRISE LANE, MADISON, WI 53719) FOR SAFETY PRACTICES PRIOR TO PERFORMING THESE FUNCTIONS. UNLESS OTHERWISE INDICATED TOP CHORD SHALL HAVE PROPERLY ATTACHED STRUCTURAL PANELS AND BOTTOM CHORD SHALL HAVE A PROPERLY ATTACHED RIGID CEILING.

IMPORTANTFURNISH A COPY OF THIS DESIGN TO THE INSTALLATION CONTRACTOR. ITW BCG, INC. SHALL NOT BE RESPONSIBLE FOR ANY DEVIATION FROM THIS DESIGN; ANY FAILURE TO BUILD THE TRUSS IN CONFORMANCE WITH TPI; OR FABRICATING, HANDLING, SHIPPING, INSTALLING & BRACING OF TRUSSES. DESIGN CONFORMS WITH APPLICABLE PROVISIONS OF NDS (NATIONAL DESIGN SPEC, BY AF&PA) AND TPI. ITW BCG CONNECTOR PLATES ARE MADE OF 20/18/16GA (W,H/SS/K) ASTM A653 GRADE 40/60 (W, K/H,SS) GALV. STEEL. APPLY PLATES TO EACH FACE OF TRUSS AND, UNLESS OTHERWISE LOCATED ON THIS DESIGN, POSITION PER DRAWINGS 160A-Z. ANY INSPECTION OF PLATES FOLLOWED BY (1) SHALL BE PER ANNEX A3 OF TPI1-2002 SEC.3. A SEAL ON THIS DRAWING INDICATES ACCEPTANCE OF PROFESSIONAL ENGINEERING RESPONSIBILITY SOLELY FOR THE TRUSS COMPONENT DESIGN SHOWN. THE SUITABILITY AND USE OF THIS COMPONENT FOR ANY BUILDING IS THE RESPONSIBILITY OF THE BUILDING DESIGNER PER ANSI/TPI 1 SEC. 2.

DOUGLAS FLEMING LICENSE No. 66648 STATE OF FLORIDA PROFESSIONAL ENGINEER

TC LL	20.0 PSF	REF	R8228- 25838
TC DL	10.0 PSF	DATE	03/19/09
BC DL	10.0 PSF	DRW	HCUSR8228 09078024
BC LL	0.0 PSF	HC-ENG	DF/DF
TOT.LD.	40.0 PSF	SEQN-	9218
DUR.FAC.	1.25	FROM	AH
SPACING	SEE ABOVE	JREF-	1TQ38228Z01

(9-070--Freeman Design Group Hudson -- , ** - J3)

Top chord 2x4 SP #2 Dense
Bot chord 2x4 SP #2 Dense

Roof overhang supports 2.00 psf soffit load.

Bottom chord checked for 10.00 psf non-concurrent live load.

110 mph wind, 15.00 ft mean hgt, ASCE 7-05, CLOSED bldg, Located anywhere in roof, CAT II, EXP B, wind TC DL=5.0 psf, wind BC DL=5.0 psf. Iw=1.00 GCpi(+/-)=0.18

Wind reactions based on MWFRS pressures.

Deflection meets L/240 live and L/180 total load.

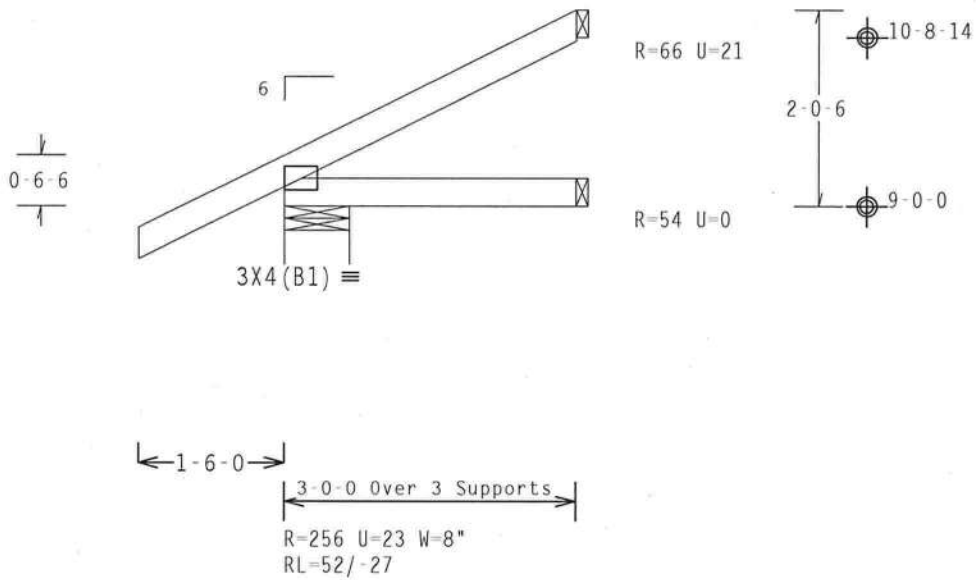

Design Crit: FBC2007Res/TPI-2002(STD)

PLT TYP. Wave | FT/RT=10%(0%)/0(0) | 8.07.00 | QTY:8 | FL/-/4/-/-/R/- | Scale =.5"/Ft.

ALPINE
ITW Building Components Group Inc.
Haines City, FL 33844
FL COA #0 278

WARNING TRUSSES REQUIRE EXTREME CARE IN FABRICATION, HANDLING, SHIPPING, INSTALLING AND BRACING. REFER TO BCSI (BUILDING COMPONENT SAFETY INFORMATION), PUBLISHED BY TPI (TRUSS PLATE INSTITUTE, 218 NORTH LEE STREET, SUITE 312, ALEXANDRIA, VA, 22314) AND WTCA (WOOD TRUSS COUNCIL OF AMERICA, 6300 ENTERPRISE LANE, MADISON, WI 53719) FOR SAFETY PRACTICES PRIOR TO PERFORMING THESE FUNCTIONS. UNLESS OTHERWISE INDICATED TOP CHORD SHALL HAVE PROPERLY ATTACHED STRUCTURAL PANELS AND BOTTOM CHORD SHALL HAVE A PROPERLY ATTACHED RIGID CEILING.

IMPORTANTFURNISH A COPY OF THIS DESIGN TO THE INSTALLATION CONTRACTOR. ITW BCG, INC. SHALL NOT BE RESPONSIBLE FOR ANY DEVIATION FROM THIS DESIGN; ANY FAILURE TO BUILD THE TRUSS IN COMFORMANCE WITH TPI; OR FABRICATING, HANDLING, SHIPPING, INSTALLING & BRACING OF TRUSSES.
DESIGN CONFORMS WITH APPLICABLE PROVISIONS OF NDS (NATIONAL DESIGN SPEC, BY AF&PA) AND TPI. ITW BCG CONNECTOR PLATES ARE MADE OF 20/18/16GA (W,H/SS/K) ASTM A653 GRADE 40/60 (W, K/H,SS) GALV. STEEL. APPLY PLATES TO EACH FACE OF TRUSS AND, UNLESS OTHERWISE LOCATED ON THIS DESIGN, POSITION PER DRAWINGS 160A-2. ANY INSPECTION OF PLATES FOLLOWED BY (1) SHALL BE PER ANNEX A3 OF TPI1-2002 SEC.3. A SEAL ON THIS DRAWING INDICATES ACCEPTANCE OF PROFESSIONAL ENGINEERING RESPONSIBILITY SOLELY FOR THE TRUSS COMPONENT DESIGN SHOWN. THE SUITABILITY AND USE OF THIS COMPONENT FOR ANY BUILDING IS THE RESPONSIBILITY OF THE BUILDING DESIGNER PER ANSI/TPI 1 SEC. 2.

DOUGLAS FLEMING LICENSE No. 66648 STATE OF FLORIDA PROFESSIONAL ENGINEER
MAR 19 '09

TC LL	20.0 PSF	REF R8228- 25839
TC DL	10.0 PSF	DATE 03/19/09
BC DL	10.0 PSF	DRW HCUSR8228 09078025
BC LL	0.0 PSF	HC-ENG DF/DF
TOT.LD.	40.0 PSF	SEQN- 9211
DUR.FAC.	1.25	FROM AH
SPACING	24.0"	JREF- 1TQ38228Z01

(9-070--Freeman Design Group Hudson -- , ** - J5)

Top chord 2x4 SP #2 Dense
Bot chord 2x4 SP #2 Dense

Roof overhang supports 2.00 psf soffit load.

Bottom chord checked for 10.00 psf non-concurrent live load.

110 mph wind, 15.00 ft mean hgt, ASCE 7-05, CLOSED bldg, not located within 4.50 ft from roof edge, CAT II, EXP B, wind TC DL=5.0 psf, wind BC DL=5.0 psf. Iw=1.00 GCpi(+/-)=0.18

Wind reactions based on MWFRS pressures.

Deflection meets L/240 live and L/180 total load.

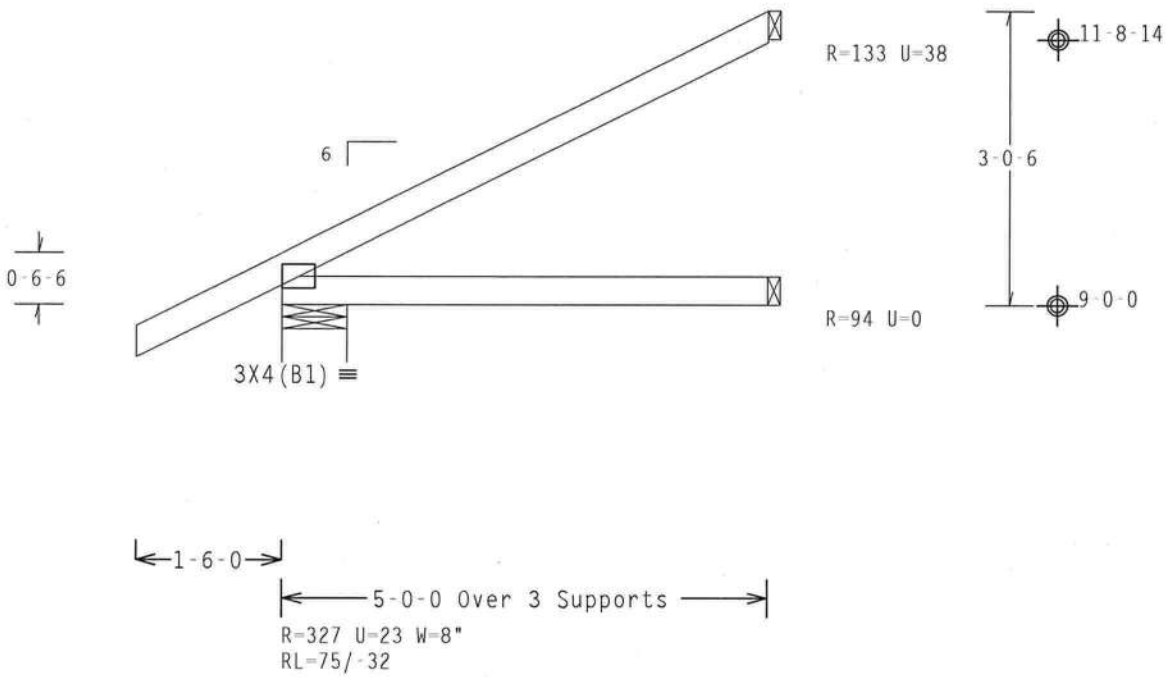

Design Crit: FBC2007Res/TPI-2002(STD)

PLT TYP. Wave FT/RT=10%(0%)/0(0) 8.07.00 QTY:8 FL/-/4/-/-/R/- Scale =.5"/Ft.

ALPINE
ITW Building Components Group Inc.
Haines City, FL 33844
FL COA #0 278

WARNING TRUSSES REQUIRE EXTREME CARE IN FABRICATION, HANDLING, SHIPPING, INSTALLING AND BRACING. REFER TO BCSI (BUILDING COMPONENT SAFETY INFORMATION), PUBLISHED BY TPI (TRUSS PLATE INSTITUTE, 218 NORTH LEE STREET, SUITE 312, ALEXANDRIA, VA, 22314) AND WTCA (WOOD TRUSS COUNCIL OF AMERICA, 6300 ENTERPRISE LANE, MADISON, WI 53719) FOR SAFETY PRACTICES PRIOR TO PERFORMING THESE FUNCTIONS. UNLESS OTHERWISE INDICATED TOP CHORD SHALL HAVE PROPERLY ATTACHED STRUCTURAL PANELS AND BOTTOM CHORD SHALL HAVE A PROPERLY ATTACHED RIGID CEILING.

IMPORTANTFURNISH A COPY OF THIS DESIGN TO THE INSTALLATION CONTRACTOR. ITW BCG, INC. SHALL NOT BE RESPONSIBLE FOR ANY DEVIATION FROM THIS DESIGN; ANY FAILURE TO BUILD THE TRUSS IN COMFORMANCE WITH TPI; OR FABRICATING, HANDLING, SHIPPING, INSTALLING & BRACING OF TRUSSES. DESIGN CONFORMS WITH APPLICABLE PROVISIONS OF NDS (NATIONAL DESIGN SPEC, BY AF&PA) AND TPI. ITW BCG CONNECTOR PLATES ARE MADE OF 20/18/16GA (W,H/SS/K) ASTM A653 GRADE 40/60 (W, K/H,SS) GALV. STEEL. APPLY PLATES TO EACH FACE OF TRUSS AND, UNLESS OTHERWISE LOCATED ON THIS DESIGN, POSITION PER DRAWINGS 160A-Z. ANY INSPECTION OF PLATES FOLLOWED BY (1) SHALL BE PER ANNEX A3 OF TPI1-2002 SEC.3. A SEAL ON THIS DRAWING INDICATES ACCEPTANCE OF PROFESSIONAL ENGINEERING RESPONSIBILITY SOLELY FOR THE TRUSS COMPONENT DESIGN SHOWN. THE SUITABILITY AND USE OF THIS COMPONENT FOR ANY BUILDING IS THE RESPONSIBILITY OF THE BUILDING DESIGNER PER ANSI/TPI 1 SEC. 2.

DOUGLAS FLEMING LICENSE No. 66648 STATE OF FLORIDA PROFESSIONAL ENGINEER

19 '09

TC LL	20.0 PSF	REF R8228- 25840
TC DL	10.0 PSF	DATE 03/19/09
BC DL	10.0 PSF	DRW HCUSR8228 09078026
BC LL	0.0 PSF	HC-ENG DF/DF
TOT.LD.	40.0 PSF	SEQN- 9214
DUR.FAC.	1.25	FROM AH
SPACING	24.0"	JREF- 1TQ38228Z01

(9-070--Freeman Design Group Hudson -- , ** - EJ7)

Top chord 2x4 SP #2 Dense
Bot chord 2x4 SP #2 Dense

Roof overhang supports 2.00 psf soffit load.

Bottom chord checked for 10.00 psf non-concurrent live load.

110 mph wind, 15.00 ft mean hgt, ASCE 7-05, CLOSED bldg, not located within 4.50 ft from roof edge, CAT II, EXP B, wind TC DL=5.0 psf, wind BC DL=5.0 psf. Iw=1.00 GCpi(+/-)=0.18

Wind reactions based on MWFRS pressures.

Deflection meets L/240 live and L/180 total load.

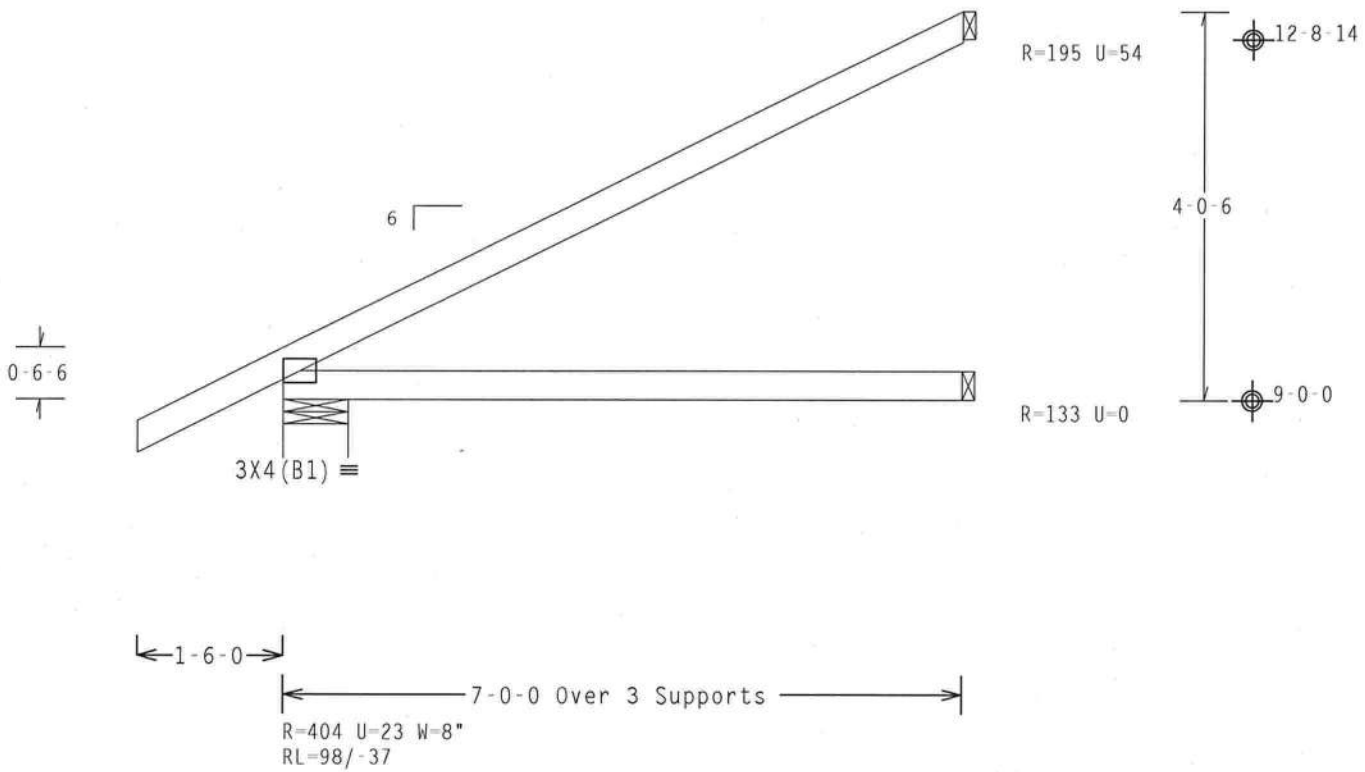

Design Crit: FBC2007Res/TPI-2002(STD)

PLT TYP. Wave FT/RT=10%(0%)/0(0) 8.07.00.1[illegible] QTY:41 FL/-/4/-/-/R/- Scale =.5"/Ft.

ALPINE
ITW Building Components Group Inc.
Haines City, FL 33844
FL COA #0 278

WARNING TRUSSES REQUIRE EXTREME CARE IN FABRICATION, HANDLING, SHIPPING, INSTALLING AND BRACING. REFER TO BCSI (BUILDING COMPONENT SAFETY INFORMATION), PUBLISHED BY TPI (TRUSS PLATE INSTITUTE, 218 NORTH LEE STREET, SUITE 312, ALEXANDRIA, VA. 22314) AND WTCA (WOOD TRUSS COUNCIL OF AMERICA, 6300 ENTERPRISE LANE, MADISON, WI 53719) FOR SAFETY PRACTICES PRIOR TO PERFORMING THESE FUNCTIONS. UNLESS OTHERWISE INDICATED TOP CHORD SHALL HAVE PROPERLY ATTACHED STRUCTURAL PANELS AND BOTTOM CHORD SHALL HAVE A PROPERLY ATTACHED RIGID CEILING.

IMPORTANT FURNISH A COPY OF THIS DESIGN TO THE INSTALLATION CONTRACTOR. ITW BCG, INC. SHALL NOT BE RESPONSIBLE FOR ANY DEVIATION FROM THIS DESIGN; ANY FAILURE TO BUILD THE TRUSS IN COMFORMANCE WITH TPI; OR FABRICATING, HANDLING, SHIPPING, INSTALLING & BRACING OF TRUSSES.
DESIGN CONFORMS WITH APPLICABLE PROVISIONS OF NDS (NATIONAL DESIGN SPEC. BY AF&PA) AND TPI. ITW BCG CONNECTOR PLATES ARE MADE OF 20/18/16GA (W,H/SS/K) ASTM A653 GRADE 40/60 (W, K/H,SS) GALV. STEEL. APPLY PLATES TO EACH FACE OF TRUSS AND, UNLESS OTHERWISE LOCATED ON THIS DESIGN, POSITION PER DRAWINGS 160A-Z. ANY INSPECTION OF PLATES FOLLOWED BY (1) SHALL BE PER ANNEX A3 OF TPII-2002 SEC.3. A SEAL ON THIS DRAWING INDICATES ACCEPTANCE OF PROFESSIONAL ENGINEERING RESPONSIBILITY SOLELY FOR THE TRUSS COMPONENT DESIGN SHOWN. THE SUITABILITY AND USE OF THIS COMPONENT FOR ANY BUILDING IS THE RESPONSIBILITY OF THE BUILDING DESIGNER PER ANSI/TPI 1 SEC. 2.

DOUGLAS FLEMING LICENSE No. 66648 STATE OF FLORIDA PROFESSIONAL ENGINEER
[illegible]19 '09

TC LL	20.0 PSF	REF R8228- 25841
TC DL	10.0 PSF	DATE 03/19/09
BC DL	10.0 PSF	DRW HCUSR8228 09078027
BC LL	0.0 PSF	HC-ENG DF/DF
TOT.LD.	40.0 PSF	SEQN- 9222
DUR.FAC.	1.25	FROM AH
SPACING	24.0"	JREF- 1TQ38228Z01

(9-070--Freeman Design Group Hudson -- , ** - EJ7A)

Top chord 2x4 SP #2 Dense
Bot chord 2x4 SP #2 Dense

Bottom chord checked for 10.00 psf non-concurrent live load.

Deflection meets L/240 live and L/180 total load.

110 mph wind, 15.00 ft mean hgt, ASCE 7-05, CLOSED bldg, not located within 4.50 ft from roof edge, CAT II, EXP B, wind TC DL=5.0 psf, wind BC DL=5.0 psf. Iw=1.00 GCpi(+/-)=0.18

Wind reactions based on MWFRS pressures.

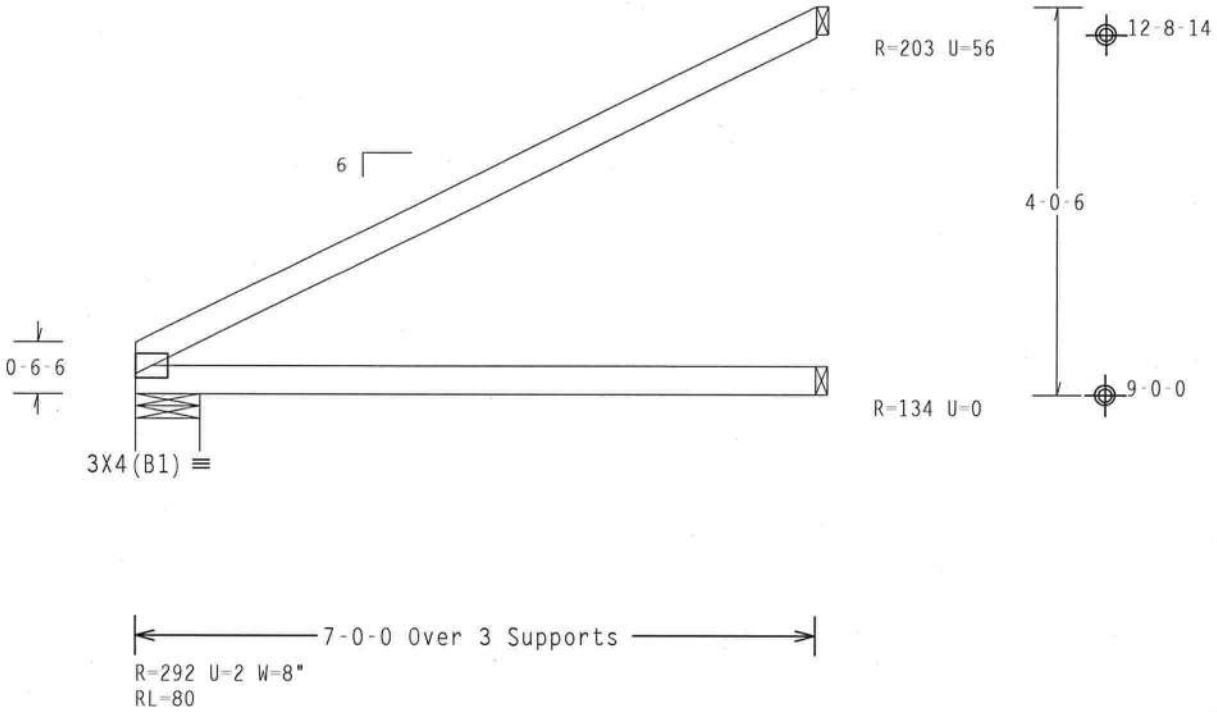

Design Crit: FBC2007Res/TPI-2002(STD)

PLT TYP. Wave | FT/RT=10%(0%)/0(0) | 8.07.00 | QTY:3 | FL/-/4/-/-/R/- | Scale =.5"/Ft.

ALPINE
ITW Building Components Group Inc.
Haines City, FL 33844
FL COA #0 278

WARNING TRUSSES REQUIRE EXTREME CARE IN FABRICATION, HANDLING, SHIPPING, INSTALLING AND BRACING. REFER TO BCSI (BUILDING COMPONENT SAFETY INFORMATION), PUBLISHED BY TPI (TRUSS PLATE INSTITUTE, 218 NORTH LEE STREET, SUITE 312, ALEXANDRIA, VA, 22314) AND WTCA (WOOD TRUSS COUNCIL OF AMERICA, 6300 ENTERPRISE LANE, MADISON, WI 53719) FOR SAFETY PRACTICES PRIOR TO PERFORMING THESE FUNCTIONS. UNLESS OTHERWISE INDICATED TOP CHORD SHALL HAVE PROPERLY ATTACHED STRUCTURAL PANELS AND BOTTOM CHORD SHALL HAVE A PROPERLY ATTACHED RIGID CEILING.

IMPORTANTFURNISH A COPY OF THIS DESIGN TO THE INSTALLATION CONTRACTOR. ITW BCG, INC. SHALL NOT BE RESPONSIBLE FOR ANY DEVIATION FROM THIS DESIGN; ANY FAILURE TO BUILD THE TRUSS IN CONFORMANCE WITH TPI; OR FABRICATING, HANDLING, SHIPPING, INSTALLING & BRACING OF TRUSSES.
DESIGN CONFORMS WITH APPLICABLE PROVISIONS OF NDS (NATIONAL DESIGN SPEC. BY AF&PA) AND TPI. ITW BCG CONNECTOR PLATES ARE MADE OF 20/18/16GA (W,H/SS/K) ASTM A653 GRADE 40/60 (W, K/H,SS) GALV. STEEL. APPLY PLATES TO EACH FACE OF TRUSS AND, UNLESS OTHERWISE LOCATED ON THIS DESIGN, POSITION PER DRAWINGS 160A-Z. ANY INSPECTION OF PLATES FOLLOWED BY (1) SHALL BE PER ANNEX A3 OF TPI1-2002 SEC.3. A SEAL ON THIS DRAWING INDICATES ACCEPTANCE OF PROFESSIONAL ENGINEERING RESPONSIBILITY SOLELY FOR THE TRUSS COMPONENT DESIGN SHOWN. THE SUITABILITY AND USE OF THIS COMPONENT FOR ANY BUILDING IS THE RESPONSIBILITY OF THE BUILDING DESIGNER PER ANSI/TPI 1 SEC. 2.

DOUGLAS FLEMING LICENSE No. 66648 STATE OF FLORIDA PROFESSIONAL ENGINEER
19 '09

TC LL	20.0 PSF	REF R8228- 25842
TC DL	10.0 PSF	DATE 03/19/09
BC DL	10.0 PSF	DRW HCUSR8228 09078028
BC LL	0.0 PSF	HC-ENG DF/DF
TOT.LD.	40.0 PSF	SEQN- 9228
DUR.FAC.	1.25	FROM AH
SPACING	24.0"	JREF- 1TQ38228Z01

Top chord 2x4 SP #2 Dense
Bot chord 2x4 SP #2 Dense

110 mph wind, 15.00 ft mean hgt, ASCE 7-05, PART._ENC. bldg, Located anywhere in roof, CAT II, EXP B, wind TC DL=5.0 psf, wind BC DL=5.0 psf. Iw=1.00 GCpi(+/-)=0.55

Bottom chord checked for 10.00 psf non-concurrent live load.

Negative reaction(s) of -321# MAX. (See below) from a non-wind load case requires uplift connection.

Wind reactions based on MWFRS pressures.

Roof overhang supports 2.00 psf soffit load.

Deflection meets L/240 live and L/180 total load.

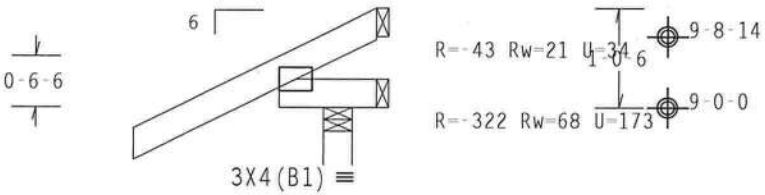

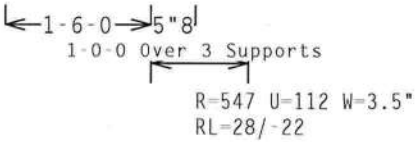

Design Crit: FBC2007Res/TPI-2002(STD)

PLT TYP. Wave FT/RT=10%(0%)/0(0) 8.07.00.1[illegible] QTY:5 FL/-/4/-/-/R/- Scale =.5"/Ft.

ALPINE
ITW Building Components Group Inc.
Haines City, FL 33844
FL COA #0 278

WARNING TRUSSES REQUIRE EXTREME CARE IN FABRICATION, HANDLING, SHIPPING, INSTALLING AND BRACING. REFER TO BCSI (BUILDING COMPONENT SAFETY INFORMATION), PUBLISHED BY TPI (TRUSS PLATE INSTITUTE, 218 NORTH LEE STREET, SUITE 312, ALEXANDRIA, VA. 22314) AND WTCA (WOOD TRUSS COUNCIL OF AMERICA, 6300 ENTERPRISE LANE, MADISON, WI 53719) FOR SAFETY PRACTICES PRIOR TO PERFORMING THESE FUNCTIONS. UNLESS OTHERWISE INDICATED TOP CHORD SHALL HAVE PROPERLY ATTACHED STRUCTURAL PANELS AND BOTTOM CHORD SHALL HAVE A PROPERLY ATTACHED RIGID CEILING.

IMPORTANTFURNISH A COPY OF THIS DESIGN TO THE INSTALLATION CONTRACTOR. ITW BCG, INC. SHALL NOT BE RESPONSIBLE FOR ANY DEVIATION FROM THIS DESIGN; ANY FAILURE TO BUILD THE TRUSS IN COMFORMANCE WITH TPI; OR FABRICATING, HANDLING, SHIPPING, INSTALLING & BRACING OF TRUSSES. DESIGN CONFORMS WITH APPLICABLE PROVISIONS OF NDS (NATIONAL DESIGN SPEC. BY AF&PA) AND TPI. ITW BCG CONNECTOR PLATES ARE MADE OF 20/18/16GA (W,H/SS/K) ASTM A653 GRADE 40/60 (W, K/H,SS) GALV. STEEL. APPLY PLATES TO EACH FACE OF TRUSS AND, UNLESS OTHERWISE LOCATED ON THIS DESIGN, POSITION PER DRAWINGS 160A-Z. ANY INSPECTION OF PLATES FOLLOWED BY (!) SHALL BE PER ANNEX A3 OF TPI1-2002 SEC.3. A SEAL ON THIS DRAWING INDICATES ACCEPTANCE OF PROFESSIONAL ENGINEERING RESPONSIBILITY SOLELY FOR THE TRUSS COMPONENT DESIGN SHOWN. THE SUITABILITY AND USE OF THIS COMPONENT FOR ANY BUILDING IS THE RESPONSIBILITY OF THE BUILDING DESIGNER PER ANSI/TPI 1 SEC. 2.

DOUGLAS FLEMING LICENSE No. 66648 STATE OF FLORIDA PROFESSIONAL ENGINEER
[illegible]19 '09

TC LL	20.0 PSF	REF	R8228- 25843
TC DL	10.0 PSF	DATE	03/19/09
BC DL	10.0 PSF	DRW	HCUSR8228 09078029
BC LL	0.0 PSF	HC-ENG	DF/DF
TOT.LD.	40.0 PSF	SEQN-	9248
DUR.FAC.	1.25	FROM	AH
SPACING	24.0"	JREF-	1TQ38228Z01

(9-070--Freeman Design Group Hudson -- , ** - HJ7A)

Top chord 2x4 SP #2 Dense
Bot chord 2x4 SP #2 Dense
Webs 2x4 SP #3

The following trusses need concentrated loads at the end of their overhangs: 3-0-0 span/setback member on the 0-5-8 cant side requires 35 lbs and the 3-0-0 span/setback member on the 0-5-8 cant side requires 35 lbs.

Hipjack supports 7-0-0 setback jacks with 0-5-8 cantilever one face; 0-5-8 cantilever opposite face.

110 mph wind, 15.00 ft mean hgt, ASCE 7-05, PART._ENC. bldg, Located anywhere in roof, CAT II, EXP B, wind TC DL=5.0 psf, wind BC DL=5.0 psf. Iw=1.00 GCpi(+/-)=0.55

Wind reactions based on MWFRS pressures.

Sub-fascia beam assumptions: 4-6-0 sub-fascia beam on the 0-5-8 cantilever side. 4-6-0 sub-fascia beam on the 0-5-8 cantilever side.

Deflection meets L/240 live and L/180 total load.

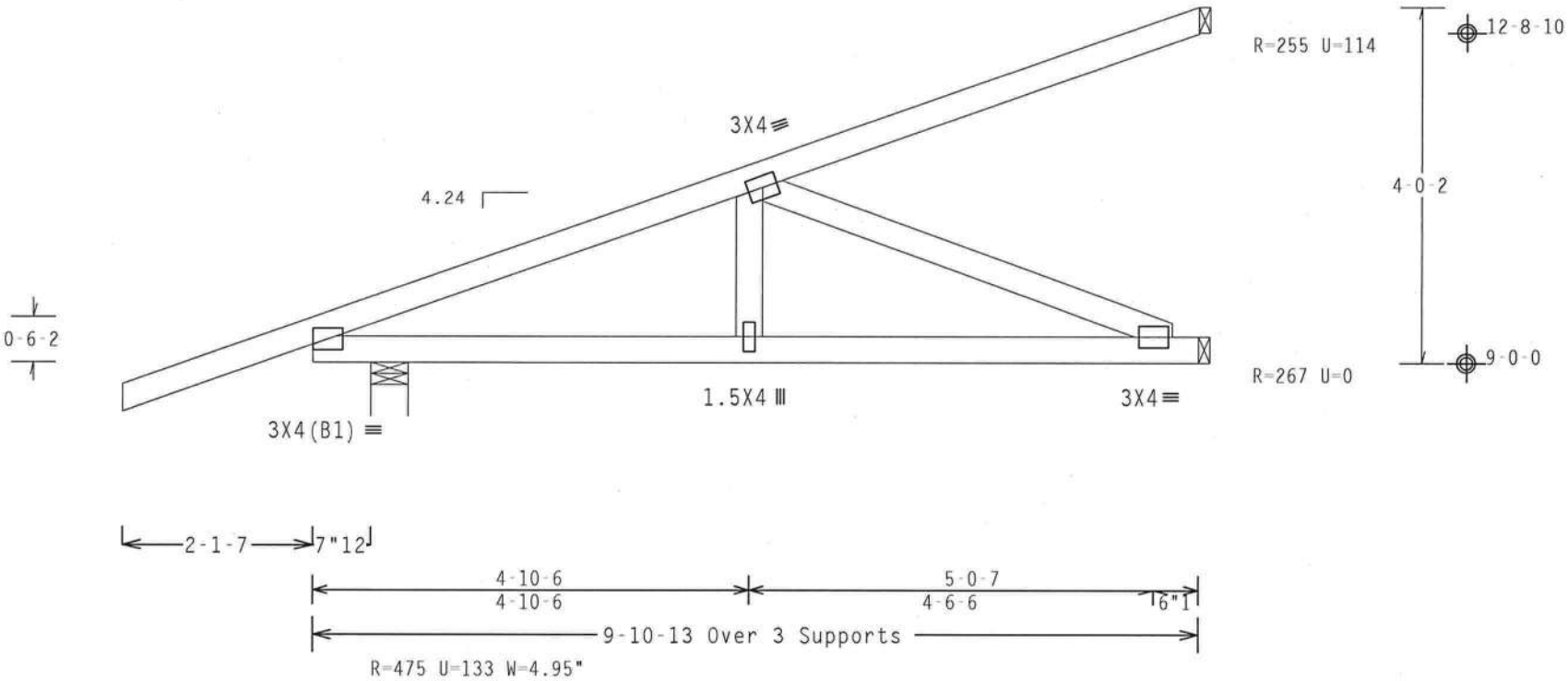

Design Crit: FBC2007Res/TPI-2002(STD)

PLT TYP. Wave | FT/RT=10%(0%)/0(0) | 8.07.00.1.8.4 | QTY:1 | FL/-/4/-/-/R/- | Scale =.5"/Ft.

ALPINE
ITW Building Components Group Inc.
Haines City, FL 33844
FL COA #0 278

WARNING TRUSSES REQUIRE EXTREME CARE IN FABRICATION, HANDLING, SHIPPING, INSTALLING AND BRACING. REFER TO BCSI (BUILDING COMPONENT SAFETY INFORMATION), PUBLISHED BY TPI (TRUSS PLATE INSTITUTE, 218 NORTH LEE STREET, SUITE 312, ALEXANDRIA, VA, 22314) AND WTCA (WOOD TRUSS COUNCIL OF AMERICA, 6300 ENTERPRISE LANE, MADISON, WI 53719) FOR SAFETY PRACTICES PRIOR TO PERFORMING THESE FUNCTIONS. UNLESS OTHERWISE INDICATED TOP CHORD SHALL HAVE PROPERLY ATTACHED STRUCTURAL PANELS AND BOTTOM CHORD SHALL HAVE A PROPERLY ATTACHED RIGID CEILING.

IMPORTANTFURNISH A COPY OF THIS DESIGN TO THE INSTALLATION CONTRACTOR. ITW BCG, INC. SHALL NOT BE RESPONSIBLE FOR ANY DEVIATION FROM THIS DESIGN; ANY FAILURE TO BUILD THE TRUSS IN COMFORMANCE WITH TPI; OR FABRICATING, HANDLING, SHIPPING, INSTALLING & BRACING OF TRUSSES.
DESIGN CONFORMS WITH APPLICABLE PROVISIONS OF NDS (NATIONAL DESIGN SPEC. BY AF&PA) AND TPI. ITW BCG CONNECTOR PLATES ARE MADE OF 20/18/16GA (W,H/SS/K) ASTM A653 GRADE 40/60 (W, K/H,SS) GALV. STEEL. APPLY PLATES TO EACH FACE OF TRUSS AND, UNLESS OTHERWISE LOCATED ON THIS DESIGN, POSITION PER DRAWINGS 160A-Z. ANY INSPECTION OF PLATES FOLLOWED BY (1) SHALL BE PER ANNEX A3 OF TPI1-2002 SEC.3. A SEAL ON THIS DRAWING INDICATES ACCEPTANCE OF PROFESSIONAL ENGINEERING RESPONSIBILITY SOLELY FOR THE TRUSS COMPONENT DESIGN SHOWN. THE SUITABILITY AND USE OF THIS COMPONENT FOR ANY BUILDING IS THE RESPONSIBILITY OF THE BUILDING DESIGNER PER ANSI/TPI 1 SEC. 2.

DOUGLAS FLEMING LICENSE No. 66648 STATE OF FLORIDA PROFESSIONAL ENGINEER
Mar 19 '09

TC LL	20.0 PSF	REF	R8228- 25844
TC DL	10.0 PSF	DATE	03/19/09
BC DL	10.0 PSF	DRW	HCUSR8228 09078030
BC LL	0.0 PSF	HC-ENG	DF/DF
TOT.LD.	40.0 PSF	SEQN-	9311
DUR.FAC.	1.25	FROM	AH
SPACING	SEE ABOVE	JREF-	1TQ38228Z01

(9-070--Freeman Design Group Hudson -- , ** - HJ7B)

Top chord 2x4 SP #2 Dense
Bot chord 2x4 SP #2 Dense
Webs 2x4 SP #3

The following trusses need concentrated loads at the end of their overhangs: 3-0-0 span/setback member on the 0-6-4 cant side requires 36 lbs and the 3-0-0 span/setback member on the 0-6-4 cant side requires 36 lbs.

Hipjack supports 7-0-0 setback jacks with 0-6-4 cantilever one face; 0-6-4 cantilever opposite face.

110 mph wind, 15.00 ft mean hgt, ASCE 7-05, PART._ENC. bldg, Located anywhere in roof, CAT II, EXP B, wind TC DL=5.0 psf, wind BC DL=5.0 psf. Iw=1.00 GCpi(+/-)=0.55

Wind reactions based on MWFRS pressures.

Sub-fascia beam assumptions: 4-6-0 sub-fascia beam on the 0-6-4 cantilever side. 4-6-0 sub-fascia beam on the 0-6-4 cantilever side.

Deflection meets L/240 live and L/180 total load.

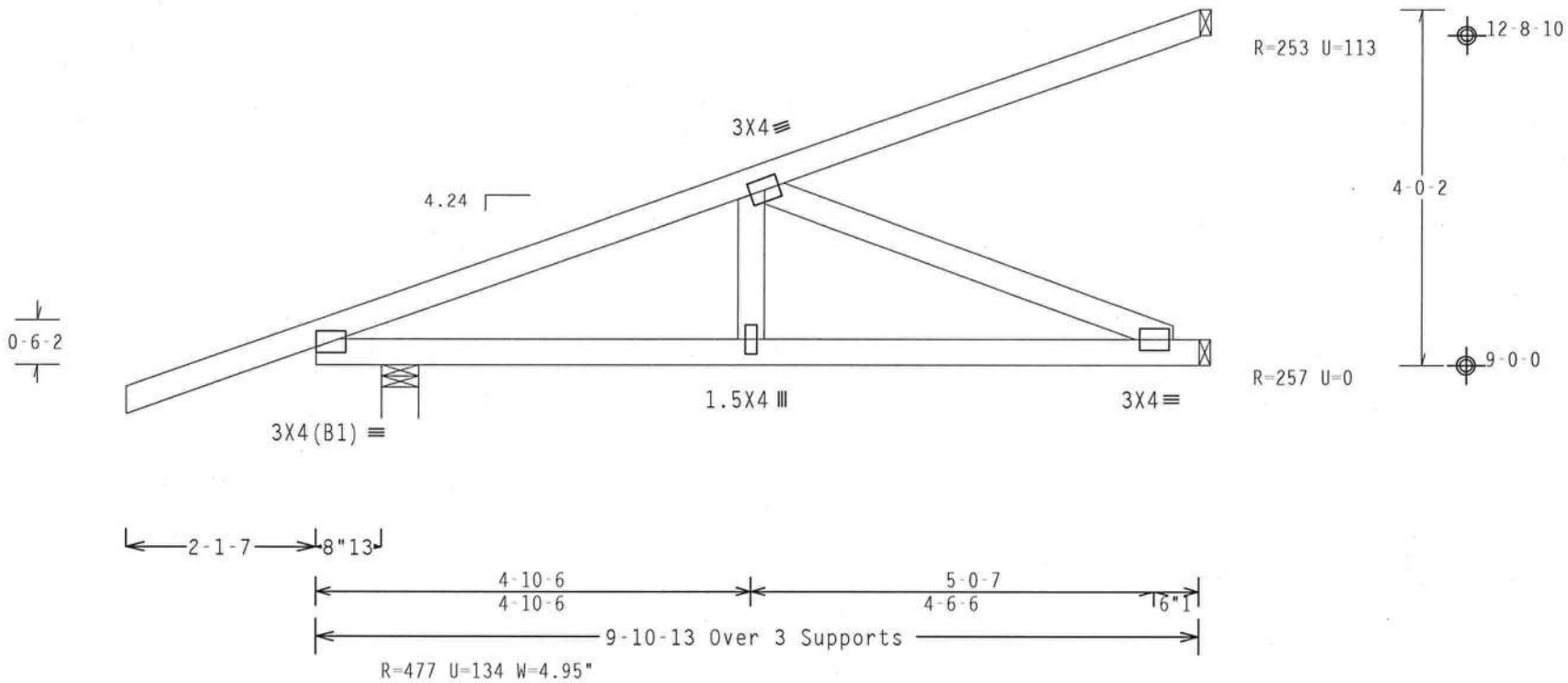

Design Crit: FBC2007Res/TPI-2002(STD)

PLT TYP. Wave FT/RT=10%(0%)/0(0) 8.07.00 QTY:1 FL/-/4/-/-/R/- Scale =.5"/Ft.

ALPINE
ITW Building Components Group Inc.
Haines City, FL 33844
FL COA #0 278

WARNING TRUSSES REQUIRE EXTREME CARE IN FABRICATION, HANDLING, SHIPPING, INSTALLING AND BRACING. REFER TO BCSI (BUILDING COMPONENT SAFETY INFORMATION), PUBLISHED BY TPI (TRUSS PLATE INSTITUTE, 218 NORTH LEE STREET, SUITE 312, ALEXANDRIA, VA, 22314) AND WTCA (WOOD TRUSS COUNCIL OF AMERICA, 6300 ENTERPRISE LANE, MADISON, WI 53719) FOR SAFETY PRACTICES PRIOR TO PERFORMING THESE FUNCTIONS. UNLESS OTHERWISE INDICATED TOP CHORD SHALL HAVE PROPERLY ATTACHED STRUCTURAL PANELS AND BOTTOM CHORD SHALL HAVE A PROPERLY ATTACHED RIGID CEILING.

IMPORTANTFURNISH A COPY OF THIS DESIGN TO THE INSTALLATION CONTRACTOR. ITW BCG, INC. SHALL NOT BE RESPONSIBLE FOR ANY DEVIATION FROM THIS DESIGN; ANY FAILURE TO BUILD THE TRUSS IN CONFORMANCE WITH TPI; OR FABRICATING, HANDLING, SHIPPING, INSTALLING & BRACING OF TRUSSES.
DESIGN CONFORMS WITH APPLICABLE PROVISIONS OF NDS (NATIONAL DESIGN SPEC. BY AF&PA) AND TPI. ITW BCG CONNECTOR PLATES ARE MADE OF 20/18/16GA (W,H/SS/K) ASTM A653 GRADE 40/60 (W, K/H,SS) GALV. STEEL. APPLY PLATES TO EACH FACE OF TRUSS AND, UNLESS OTHERWISE LOCATED ON THIS DESIGN, POSITION PER DRAWINGS 160A-Z. ANY INSPECTION OF PLATES FOLLOWED BY (1) SHALL BE PER ANNEX A3 OF TPI1-2002 SEC.3. A SEAL ON THIS DRAWING INDICATES ACCEPTANCE OF PROFESSIONAL ENGINEERING RESPONSIBILITY SOLELY FOR THE TRUSS COMPONENT DESIGN SHOWN. THE SUITABILITY AND USE OF THIS COMPONENT FOR ANY BUILDING IS THE RESPONSIBILITY OF THE BUILDING DESIGNER PER ANSI/TPI 1 SEC. 2.

DOUGLAS FLEMING LICENSE No. 66648 STATE OF FLORIDA PROFESSIONAL ENGINEER
MAR 19 '09

TC LL	20.0 PSF	REF	R8228- 25845
TC DL	10.0 PSF	DATE	03/19/09
BC DL	10.0 PSF	DRW	HCUSR8228 09078031
BC LL	0.0 PSF	HC-ENG	DF/DF
TOT.LD.	40.0 PSF	SEQN-	9316
DUR.FAC.	1.25	FROM	AH
SPACING	SEE ABOVE	JREF-	1TQ38228Z01

(9-070--Freeman Design Group Hudson -- , ** - HJ7D)

Top chord 2x4 SP #2 Dense
Bot chord 2x4 SP #2 Dense
Webs 2x4 SP #3

The following members need concentrated loads at the heel: 1-0-0 span/setback member on the 0-5-0 cant side requires 0 lbs and the 1-0-0 span/setback member on the 0-5-0 cant side requires 0 lbs.

Hipjack supports 6-11-8 setback jacks with 0-5-0 cantilever one face; 0-5-0 cantilever opposite face.

110 mph wind, 15.00 ft mean hgt, ASCE 7-05, PART._ENC. bldg, Located anywhere in roof, CAT II, EXP B, wind TC DL=5.0 psf, wind BC DL=5.0 psf. Iw=1.00 GCpi(+/-)=0.55

Wind reactions based on MWFRS pressures.

Sub-fascia beam assumptions: 1-0-0 sub-fascia beam on the 0-5-0 cantilever side. 1-0-0 sub-fascia beam on the 0-5-0 cantilever side.

Deflection meets L/240 live and L/180 total load.

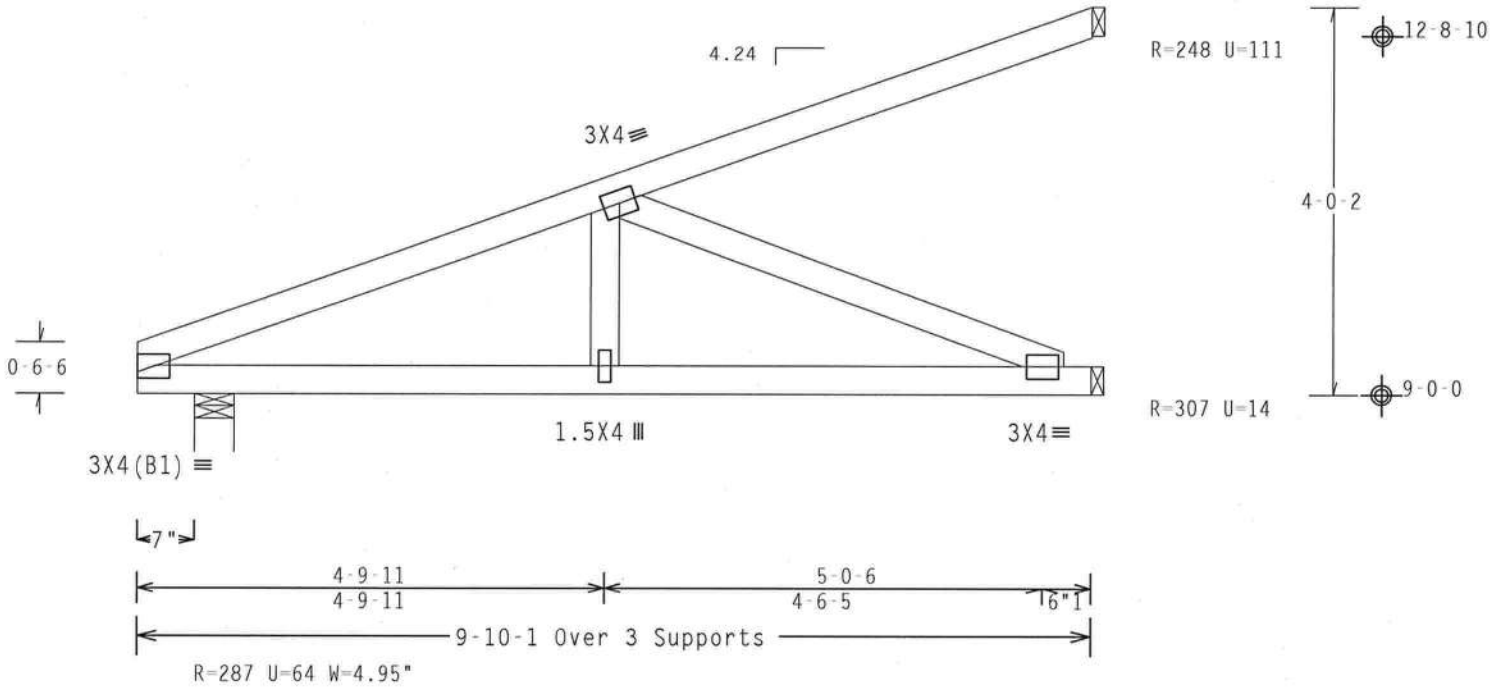

Design Crit: FBC2007Res/TPI-2002(STD)

PLT TYP. Wave | FT/RT=10%(0%)/0(0) | 8.07.00 | QTY:1 | FL/-/4/-/-/R/- | Scale =.5"/Ft.

ALPINE
ITW Building Components Group Inc.
Haines City, FL 33844
FL COA #0 278

WARNING TRUSSES REQUIRE EXTREME CARE IN FABRICATION, HANDLING, SHIPPING, INSTALLING AND BRACING. REFER TO BCSI (BUILDING COMPONENT SAFETY INFORMATION), PUBLISHED BY TPI (TRUSS PLATE INSTITUTE, 218 NORTH LEE STREET, SUITE 312, ALEXANDRIA, VA. 22314) AND WTCA (WOOD TRUSS COUNCIL OF AMERICA, 6300 ENTERPRISE LANE, MADISON, WI 53719) FOR SAFETY PRACTICES PRIOR TO PERFORMING THESE FUNCTIONS. UNLESS OTHERWISE INDICATED TOP CHORD SHALL HAVE PROPERLY ATTACHED STRUCTURAL PANELS AND BOTTOM CHORD SHALL HAVE A PROPERLY ATTACHED RIGID CEILING.

IMPORTANT FURNISH A COPY OF THIS DESIGN TO THE INSTALLATION CONTRACTOR. ITW BCG, INC. SHALL NOT BE RESPONSIBLE FOR ANY DEVIATION FROM THIS DESIGN; ANY FAILURE TO BUILD THE TRUSS IN COMFORMANCE WITH TPI; OR FABRICATING, HANDLING, SHIPPING, INSTALLING & BRACING OF TRUSSES.
DESIGN CONFORMS WITH APPLICABLE PROVISIONS OF NDS (NATIONAL DESIGN SPEC, BY AF&PA) AND TPI. ITW BCG CONNECTOR PLATES ARE MADE OF 20/18/16GA (W,H/SS/K) ASTM A653 GRADE 40/60 (W, K/H,SS) GALV. STEEL. APPLY PLATES TO EACH FACE OF TRUSS AND, UNLESS OTHERWISE LOCATED ON THIS DESIGN, POSITION PER DRAWINGS 160A-Z. ANY INSPECTION OF PLATES FOLLOWED BY (1) SHALL BE PER ANNEX A3 OF TPI1-2002 SEC.3. A SEAL ON THIS DRAWING INDICATES ACCEPTANCE OF PROFESSIONAL ENGINEERING RESPONSIBILITY SOLELY FOR THE TRUSS COMPONENT DESIGN SHOWN. THE SUITABILITY AND USE OF THIS COMPONENT FOR ANY BUILDING IS THE RESPONSIBILITY OF THE BUILDING DESIGNER PER ANSI/TPI 1 SEC. 2.

DOUGLAS FLEMING LICENSE No. 66648 STATE OF FLORIDA PROFESSIONAL ENGINEER
19 '09

TC LL	20.0 PSF	REF	R8228- 25846
TC DL	10.0 PSF	DATE	03/19/09
BC DL	10.0 PSF	DRW	HCUSR8228 09078032
BC LL	0.0 PSF	HC-ENG	DF/DF
TOT.LD.	40.0 PSF	SEQN-	9330
DUR.FAC.	1.25	FROM	AH
SPACING	SEE ABOVE	JREF-	1TQ38228Z01

(9-070--Freeman Design Group Hudson -- . ** - HJ7C)

Top chord 2x4 SP #2 Dense
Bot chord 2x4 SP #2 Dense
Webs 2x4 SP #3

The following trusses need concentrated loads at the end of their overhangs: 3-0-0 span/setback member on the 0-6-0 cant side requires 36 lbs and the 3-0-0 span/setback member on the 0-6-0 cant side requires 36 lbs.

Hipjack supports 7-0-0 setback jacks with 0-6-0 cantilever one face; 0-6-0 cantilever opposite face.

110 mph wind, 15.00 ft mean hgt, ASCE 7-05, PART._ENC. bldg, Located anywhere in roof, CAT II, EXP B, wind TC DL=5.0 psf, wind BC DL=5.0 psf. Iw=1.00 GCpi(+/-)=0.55

Wind reactions based on MWFRS pressures.

Sub-fascia beam assumptions: 4-6-0 sub-fascia beam on the 0-6-0 cantilever side. 4-6-0 sub-fascia beam on the 0-6-0 cantilever side.

Deflection meets L/240 live and L/180 total load.

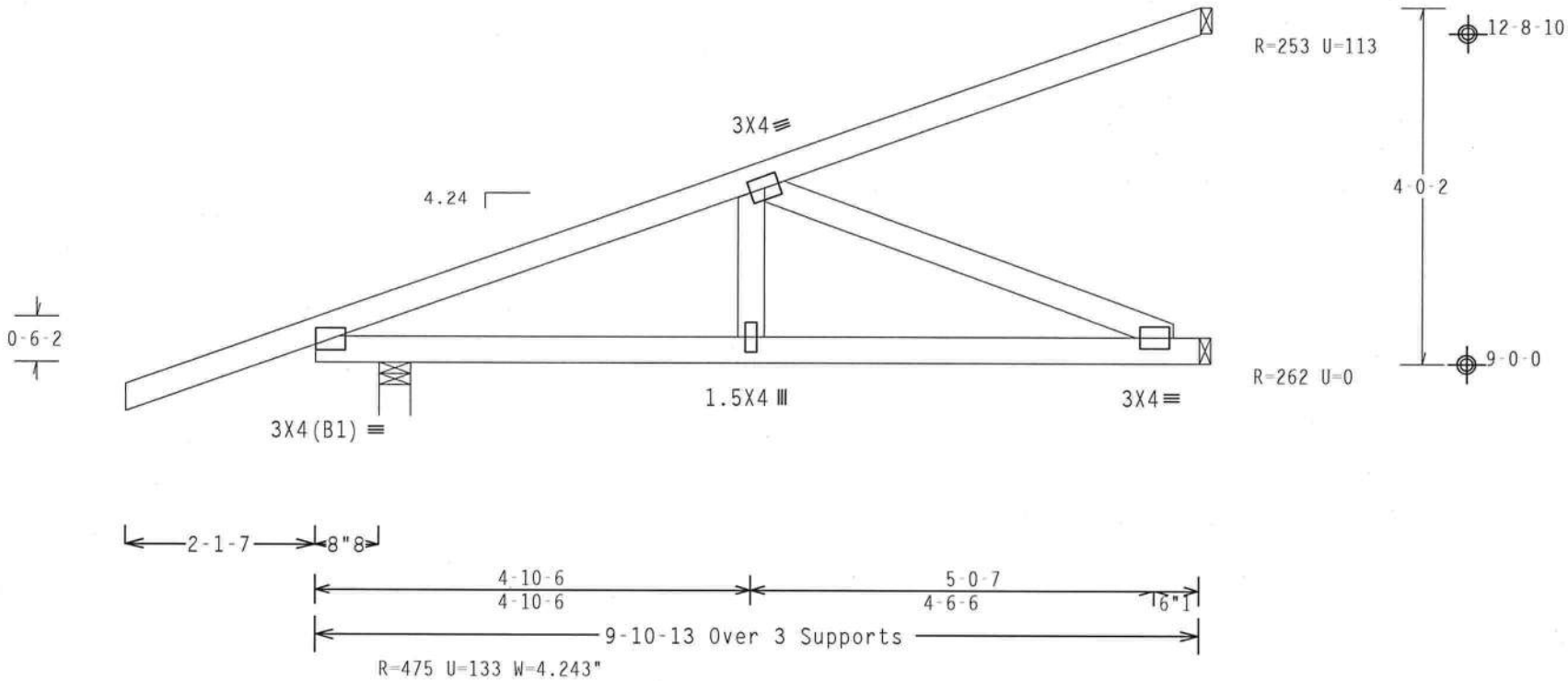

Design Crit: FBC2007Res/TPI-2002(STD)

PLT TYP. Wave FT/RT=10%(0%)/0(0) 8.07.00 QTY:1 FL/-/4/-/-/R/- Scale =.5"/Ft.

ALPINE
ITW Building Components Group Inc.
Haines City, FL 33844
FL COA #0 278

WARNING TRUSSES REQUIRE EXTREME CARE IN FABRICATION, HANDLING, SHIPPING, INSTALLING AND BRACING. REFER TO BCSI (BUILDING COMPONENT SAFETY INFORMATION), PUBLISHED BY TPI (TRUSS PLATE INSTITUTE, 218 NORTH LEE STREET, SUITE 312, ALEXANDRIA, VA. 22314) AND WTCA (WOOD TRUSS COUNCIL OF AMERICA, 6300 ENTERPRISE LANE, MADISON, WI 53719) FOR SAFETY PRACTICES PRIOR TO PERFORMING THESE FUNCTIONS. UNLESS OTHERWISE INDICATED TOP CHORD SHALL HAVE PROPERLY ATTACHED STRUCTURAL PANELS AND BOTTOM CHORD SHALL HAVE A PROPERLY ATTACHED RIGID CEILING.

IMPORTANT FURNISH A COPY OF THIS DESIGN TO THE INSTALLATION CONTRACTOR. ITW BCG, INC. SHALL NOT BE RESPONSIBLE FOR ANY DEVIATION FROM THIS DESIGN; ANY FAILURE TO BUILD THE TRUSS IN COMFORMANCE WITH TPI; OR FABRICATING, HANDLING, SHIPPING, INSTALLING & BRACING OF TRUSSES. DESIGN CONFORMS WITH APPLICABLE PROVISIONS OF NDS (NATIONAL DESIGN SPEC. BY AF&PA) AND TPI. ITW BCG CONNECTOR PLATES ARE MADE OF 20/18/16GA (W,H/SS/K) ASTM A653 GRADE 40/60 (W, K/H,SS) GALV. STEEL. APPLY PLATES TO EACH FACE OF TRUSS AND, UNLESS OTHERWISE LOCATED ON THIS DESIGN, POSITION PER DRAWINGS 160A-Z. ANY INSPECTION OF PLATES FOLLOWED BY (1) SHALL BE PER ANNEX A3 OF TPI1-2002 SEC.3. A SEAL ON THIS DRAWING INDICATES ACCEPTANCE OF PROFESSIONAL ENGINEERING RESPONSIBILITY SOLELY FOR THE TRUSS COMPONENT DESIGN SHOWN. THE SUITABILITY AND USE OF THIS COMPONENT FOR ANY BUILDING IS THE RESPONSIBILITY OF THE BUILDING DESIGNER PER ANSI/TPI 1 SEC. 2.

DOUGLAS FLEMING LICENSE No. 66648 STATE OF FLORIDA PROFESSIONAL ENGINEER

19 '09

TC LL	20.0 PSF	REF	R8228- 25847
TC DL	10.0 PSF	DATE	03/19/09
BC DL	10.0 PSF	DRW	HCUSR8228 09078033
BC LL	0.0 PSF	HC-ENG	DF/DF
TOT.LD.	40.0 PSF	SEQN-	9321
DUR.FAC.	1.25	FROM	AH
SPACING	SEE ABOVE	JREF-	1TQ38228Z01

Top chord 2x4 SP #2 Dense
Bot chord 2x4 SP #2 Dense

110 mph wind, 15.00 ft mean hgt, ASCE 7-05, PART._ENC. bldg, Located anywhere in roof, CAT II, EXP B, wind TC DL=5.0 psf, wind BC DL=5.0 psf. Iw=1.00 GCpi(+/-)=0.55

Bottom chord checked for 10.00 psf non-concurrent live load.

Provide (3)16d (0.162"x3.5") nails toe-nailed at top chord.
Provide (3)16d (0.162"x3.5") nails toe-nailed at bottom chord.

Negative reaction(s) of -423# MAX. (See below) from a non-wind load case requires uplift connection.

Wind reactions based on MWFRS pressures.

Roof overhang supports 2.00 psf soffit load.

Deflection meets L/240 live and L/180 total load.

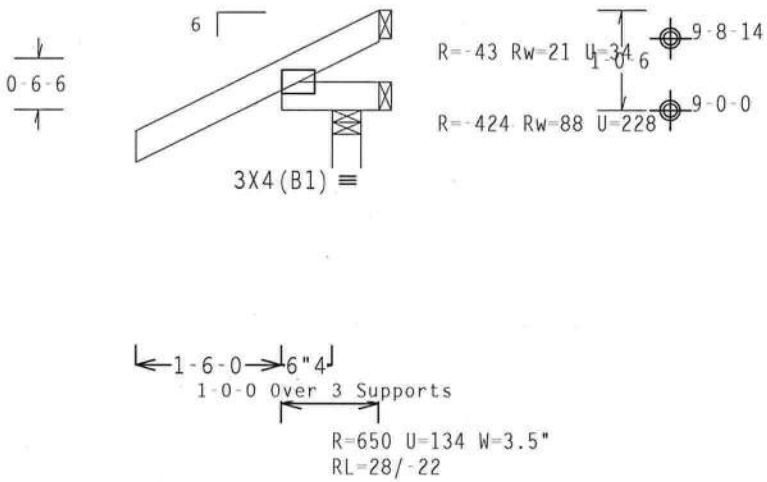

Design Crit: FBC2007Res/TPI-2002(STD)

PLT TYP. Wave | FT/RT=10%(0%)/0(0) | 8.07.00 | QTY:1 | FL/-/4/-/-/R/- | Scale =.5"/Ft.

ALPINE
ITW Building Components Group Inc.
Haines City, FL 33844
FL COA #0 278

WARNING TRUSSES REQUIRE EXTREME CARE IN FABRICATION, HANDLING, SHIPPING, INSTALLING AND BRACING. REFER TO BCSI (BUILDING COMPONENT SAFETY INFORMATION), PUBLISHED BY TPI (TRUSS PLATE INSTITUTE, 218 NORTH LEE STREET, SUITE 312, ALEXANDRIA, VA. 22314) AND WTCA (WOOD TRUSS COUNCIL OF AMERICA, 6300 ENTERPRISE LANE, MADISON, WI 53719) FOR SAFETY PRACTICES PRIOR TO PERFORMING THESE FUNCTIONS. UNLESS OTHERWISE INDICATED TOP CHORD SHALL HAVE PROPERLY ATTACHED STRUCTURAL PANELS AND BOTTOM CHORD SHALL HAVE A PROPERLY ATTACHED RIGID CEILING.

IMPORTANTFURNISH A COPY OF THIS DESIGN TO THE INSTALLATION CONTRACTOR. ITW BCG, INC. SHALL NOT BE RESPONSIBLE FOR ANY DEVIATION FROM THIS DESIGN; ANY FAILURE TO BUILD THE TRUSS IN CONFORMANCE WITH TPI; OR FABRICATING, HANDLING, SHIPPING, INSTALLING & BRACING OF TRUSSES.
DESIGN CONFORMS WITH APPLICABLE PROVISIONS OF NDS (NATIONAL DESIGN SPEC. BY AF&PA) AND TPI. ITW BCG CONNECTOR PLATES ARE MADE OF 20/18/16GA (W,H/SS/K) ASTM A653 GRADE 40/60 (W, K/H,SS) GALV. STEEL. APPLY PLATES TO EACH FACE OF TRUSS AND, UNLESS OTHERWISE LOCATED ON THIS DESIGN, POSITION PER DRAWINGS 160A-Z. ANY INSPECTION OF PLATES FOLLOWED BY (1) SHALL BE PER ANNEX A3 OF TPI1-2002 SEC.3. A SEAL ON THIS DRAWING INDICATES ACCEPTANCE OF PROFESSIONAL ENGINEERING RESPONSIBILITY SOLELY FOR THE TRUSS COMPONENT DESIGN SHOWN. THE SUITABILITY AND USE OF THIS COMPONENT FOR ANY BUILDING IS THE RESPONSIBILITY OF THE BUILDING DESIGNER PER ANSI/TPI 1 SEC. 2.

DOUGLAS FLEMING LICENSE No. 66648 STATE OF FLORIDA PROFESSIONAL ENGINEER
MAR 19 '09

TC LL	20.0 PSF	REF	R8228- 25848
TC DL	10.0 PSF	DATE	03/19/09
BC DL	10.0 PSF	DRW	HCUSR8228 09078034
BC LL	0.0 PSF	HC-ENG	DF/DF
TOT.LD.	40.0 PSF	SEQN-	9254
DUR.FAC.	1.25	FROM	AH
SPACING	24.0"	JREF-	1TQ38228Z01

(9-070--Freeman Design Group Hudson -- , ** - J3A)

Top chord 2x4 SP #2 Dense
Bot chord 2x4 SP #2 Dense

Roof overhang supports 2.00 psf soffit load.

Bottom chord checked for 10.00 psf non-concurrent live load.

110 mph wind, 15.00 ft mean hgt, ASCE 7-05, PART._ENC. bldg, Located anywhere in roof, CAT II, EXP B, wind TC DL=5.0 psf, wind BC DL=5.0 psf. Iw=1.00 GCpi(+/-)=0.55

Wind reactions based on MWFRS pressures.

Deflection meets L/240 live and L/180 total load.

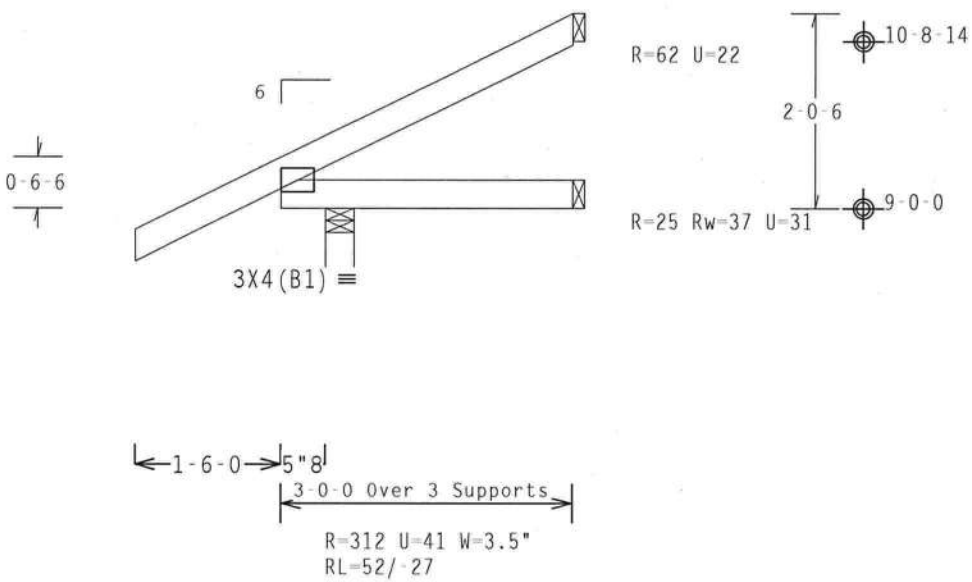

Design Crit: FBC2007Res/TPI-2002(STD)

PLT TYP. Wave | FT/RT=10%(0%)/0(0) | 8.07.00 | QTY:5 | FL/-/4/-/-/R/- | Scale =.5"/Ft.

ALPINE
ITW Building Components Group Inc.
Haines City, FL 33844
FL COA #0 278

WARNING TRUSSES REQUIRE EXTREME CARE IN FABRICATION, HANDLING, SHIPPING, INSTALLING AND BRACING. REFER TO BCSI (BUILDING COMPONENT SAFETY INFORMATION), PUBLISHED BY TPI (TRUSS PLATE INSTITUTE, 218 NORTH LEE STREET, SUITE 312, ALEXANDRIA, VA. 22314) AND WTCA (WOOD TRUSS COUNCIL OF AMERICA, 6300 ENTERPRISE LANE, MADISON, WI 53719) FOR SAFETY PRACTICES PRIOR TO PERFORMING THESE FUNCTIONS. UNLESS OTHERWISE INDICATED TOP CHORD SHALL HAVE PROPERLY ATTACHED STRUCTURAL PANELS AND BOTTOM CHORD SHALL HAVE A PROPERLY ATTACHED RIGID CEILING.

IMPORTANTFURNISH A COPY OF THIS DESIGN TO THE INSTALLATION CONTRACTOR. ITW BCG, INC. SHALL NOT BE RESPONSIBLE FOR ANY DEVIATION FROM THIS DESIGN; ANY FAILURE TO BUILD THE TRUSS IN CONFORMANCE WITH TPI; OR FABRICATING, HANDLING, SHIPPING, INSTALLING & BRACING OF TRUSSES. DESIGN CONFORMS WITH APPLICABLE PROVISIONS OF NDS (NATIONAL DESIGN SPEC, BY AF&PA) AND TPI. ITW BCG CONNECTOR PLATES ARE MADE OF 20/18/16GA (W,H/SS/K) ASTM A653 GRADE 40/60 (W, K/H,SS) GALV. STEEL. APPLY PLATES TO EACH FACE OF TRUSS AND, UNLESS OTHERWISE LOCATED ON THIS DESIGN, POSITION PER DRAWINGS 160A-Z. ANY INSPECTION OF PLATES FOLLOWED BY (1) SHALL BE PER ANNEX A3 OF TPI1-2002 SEC.3. A SEAL ON THIS DRAWING INDICATES ACCEPTANCE OF PROFESSIONAL ENGINEERING RESPONSIBILITY SOLELY FOR THE TRUSS COMPONENT DESIGN SHOWN. THE SUITABILITY AND USE OF THIS COMPONENT FOR ANY BUILDING IS THE RESPONSIBILITY OF THE BUILDING DESIGNER PER ANSI/TPI 1 SEC. 2.

DOUGLAS FLEMING LICENSE No. 66648 STATE OF FLORIDA PROFESSIONAL ENGINEER
19 '09

TC LL	20.0 PSF	REF	R8228- 25849
TC DL	10.0 PSF	DATE	03/19/09
BC DL	10.0 PSF	DRW	HCUSR8228 09078035
BC LL	0.0 PSF	HC-ENG	DF/DF
TOT.LD.	40.0 PSF	SEQN-	9257
DUR.FAC.	1.25	FROM	AH
SPACING	24.0"	JREF-	1TQ38228Z01

(9-070--Freeman Design Group Hudson -- , ** - J3B)

Top chord 2x4 SP #2 Dense
Bot chord 2x4 SP #2 Dense

Roof overhang supports 2.00 psf soffit load.

Bottom chord checked for 10.00 psf non-concurrent live load.

110 mph wind, 15.00 ft mean hgt, ASCE 7-05, PART._ENC. bldg, Located anywhere in roof, CAT II, EXP B, wind TC DL=5.0 psf, wind BC DL=5.0 psf. Iw=1.00 GCpi(+/-)=0.55

Wind reactions based on MWFRS pressures.

Deflection meets L/240 live and L/180 total load.

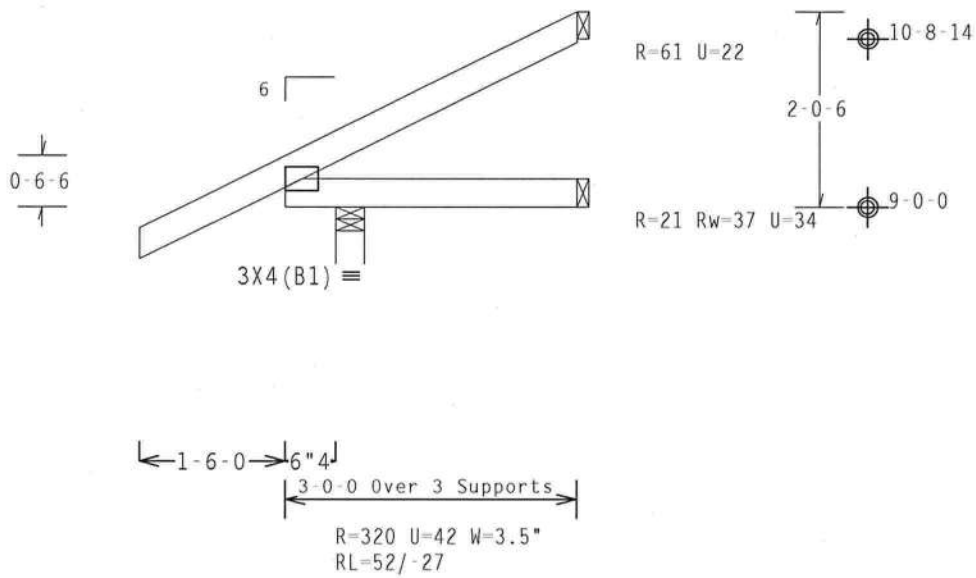

Design Crit: FBC2007Res/TPI-2002(STD)

PLT TYP. Wave | FT/RT=10%(0%)/0(0) | 8.07.00 | QTY:1 | FL/-/4/-/-/R/- | Scale =.5"/Ft.

ALPINE
ITW Building Components Group Inc.
Haines City, FL 33844
FL COA #0 278

WARNING TRUSSES REQUIRE EXTREME CARE IN FABRICATION, HANDLING, SHIPPING, INSTALLING AND BRACING. REFER TO BCSI (BUILDING COMPONENT SAFETY INFORMATION), PUBLISHED BY TPI (TRUSS PLATE INSTITUTE, 218 NORTH LEE STREET, SUITE 312, ALEXANDRIA, VA, 22314) AND WICA (WOOD TRUSS COUNCIL OF AMERICA, 6300 ENTERPRISE LANE, MADISON, WI 53719) FOR SAFETY PRACTICES PRIOR TO PERFORMING THESE FUNCTIONS. UNLESS OTHERWISE INDICATED TOP CHORD SHALL HAVE PROPERLY ATTACHED STRUCTURAL PANELS AND BOTTOM CHORD SHALL HAVE A PROPERLY ATTACHED RIGID CEILING.

IMPORTANTFURNISH A COPY OF THIS DESIGN TO THE INSTALLATION CONTRACTOR. ITW BCG, INC. SHALL NOT BE RESPONSIBLE FOR ANY DEVIATION FROM THIS DESIGN; ANY FAILURE TO BUILD THE TRUSS IN COMFORMANCE WITH TPI; OR FABRICATING, HANDLING, SHIPPING, INSTALLING & BRACING OF TRUSSES.
DESIGN CONFORMS WITH APPLICABLE PROVISIONS OF NDS (NATIONAL DESIGN SPEC. BY AF&PA) AND TPI. ITW BCG CONNECTOR PLATES ARE MADE OF 20/18/16GA (W,H/SS/K) ASTM A653 GRADE 40/60 (W, K/H,SS) GALV. STEEL. APPLY PLATES TO EACH FACE OF TRUSS AND, UNLESS OTHERWISE LOCATED ON THIS DESIGN, POSITION PER DRAWINGS 160A-Z. ANY INSPECTION OF PLATES FOLLOWED BY (1) SHALL BE PER ANNEX A3 OF TPI1-2002 SEC.3. A SEAL ON THIS DRAWING INDICATES ACCEPTANCE OF PROFESSIONAL ENGINEERING RESPONSIBILITY SOLELY FOR THE TRUSS COMPONENT DESIGN SHOWN. THE SUITABILITY AND USE OF THIS COMPONENT FOR ANY BUILDING IS THE RESPONSIBILITY OF THE BUILDING DESIGNER PER ANSI/TPI 1 SEC. 2.

DOUGLAS FLEMING LICENSE No. 66648 STATE OF FLORIDA PROFESSIONAL ENGINEER

MAR 19 '09

TC LL	20.0 PSF	REF R8228- 25850
TC DL	10.0 PSF	DATE 03/19/09
BC DL	10.0 PSF	DRW HCUSR8228 09078036
BC LL	0.0 PSF	HC-ENG DF/DF
TOT.LD.	40.0 PSF	SEQN- 9263
DUR.FAC.	1.25	FROM AH
SPACING	24.0"	JREF- 1TQ38228Z01

(9-070--Freeman Design Group Hudson -- , ** - J5A)

Top chord 2x4 SP #2 Dense
Bot chord 2x4 SP #2 Dense

Roof overhang supports 2.00 psf soffit load.

Bottom chord checked for 10.00 psf non-concurrent live load.

110 mph wind, 15.00 ft mean hgt, ASCE 7-05, PART._ENC. bldg, not located within 4.50 ft from roof edge, CAT II, EXP B, wind TC DL=5.0 psf, wind BC DL=5.0 psf. Iw=1.00 GCpi(+/-)=0.55

Wind reactions based on MWFRS pressures.

Deflection meets L/240 live and L/180 total load.

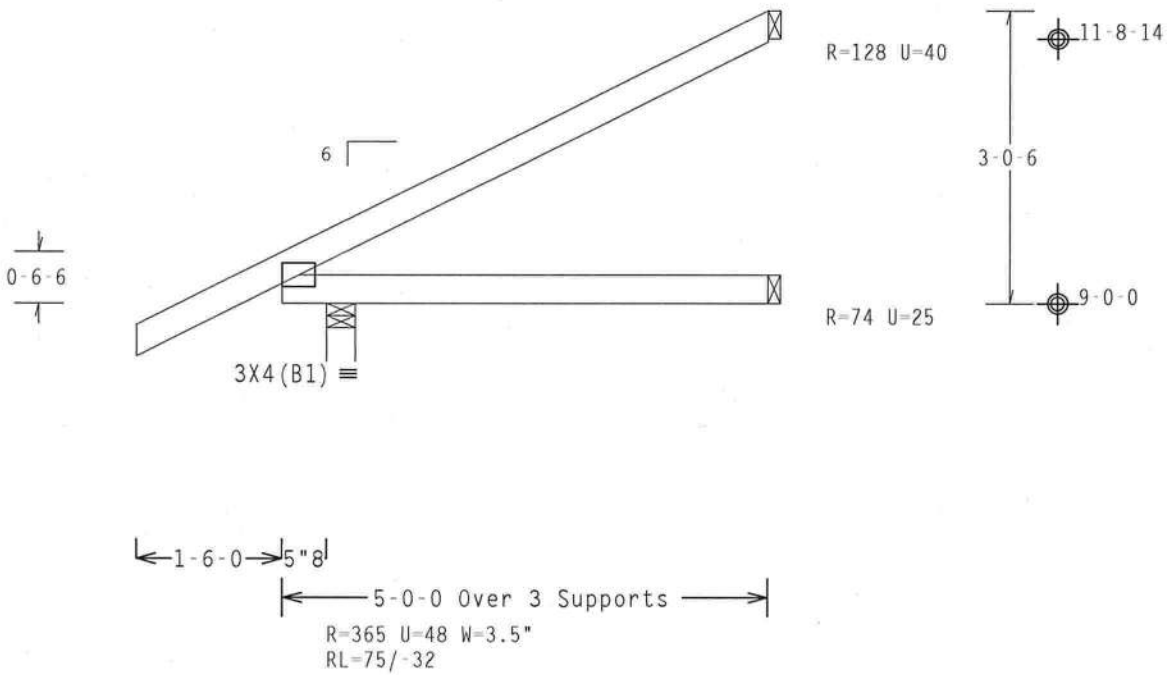

Design Crit: FBC2007Res/TPI-2002(STD)

PLT TYP. Wave | FT/RT=10%(0%)/0(0) | 8.07.00 | QTY:5 | FL/-/4/-/-/R/- | Scale =.5"/Ft.

ALPINE
ITW Building Components Group Inc.
Haines City, FL 33844
FL COA #0 278

WARNING TRUSSES REQUIRE EXTREME CARE IN FABRICATION, HANDLING, SHIPPING, INSTALLING AND BRACING. REFER TO BCSI (BUILDING COMPONENT SAFETY INFORMATION), PUBLISHED BY TPI (TRUSS PLATE INSTITUTE, 218 NORTH LEE STREET, SUITE 312, ALEXANDRIA, VA. 22314) AND WTCA (WOOD TRUSS COUNCIL OF AMERICA, 6300 ENTERPRISE LANE, MADISON, WI 53719) FOR SAFETY PRACTICES PRIOR TO PERFORMING THESE FUNCTIONS. UNLESS OTHERWISE INDICATED TOP CHORD SHALL HAVE PROPERLY ATTACHED STRUCTURAL PANELS AND BOTTOM CHORD SHALL HAVE A PROPERLY ATTACHED RIGID CEILING.

IMPORTANT FURNISH A COPY OF THIS DESIGN TO THE INSTALLATION CONTRACTOR. ITW BCG, INC. SHALL NOT BE RESPONSIBLE FOR ANY DEVIATION FROM THIS DESIGN; ANY FAILURE TO BUILD THE TRUSS IN COMFORMANCE WITH TPI; OR FABRICATING, HANDLING, SHIPPING, INSTALLING & BRACING OF TRUSSES.
DESIGN CONFORMS WITH APPLICABLE PROVISIONS OF NDS (NATIONAL DESIGN SPEC. BY AF&PA) AND TPI. ITW BCG CONNECTOR PLATES ARE MADE OF 20/18/16GA (W,H/SS/K) ASTM A653 GRADE 40/60 (W, K/H,SS) GALV. STEEL. APPLY PLATES TO EACH FACE OF TRUSS AND, UNLESS OTHERWISE LOCATED ON THIS DESIGN, POSITION PER DRAWINGS 160A-Z. ANY INSPECTION OF PLATES FOLLOWED BY (I) SHALL BE PER ANNEX A3 OF TPI1-2002 SEC.3. A SEAL ON THIS DRAWING INDICATES ACCEPTANCE OF PROFESSIONAL ENGINEERING RESPONSIBILITY SOLELY FOR THE TRUSS COMPONENT DESIGN SHOWN. THE SUITABILITY AND USE OF THIS COMPONENT FOR ANY BUILDING IS THE RESPONSIBILITY OF THE BUILDING DESIGNER PER ANSI/TPI 1 SEC. 2.

DOUGLAS FLEMING LICENSE No. 66648 STATE OF FLORIDA PROFESSIONAL ENGINEER
19 '09

TC LL	20.0 PSF	REF R8228- 25851
TC DL	10.0 PSF	DATE 03/19/09
BC DL	10.0 PSF	DRW HCUSR8228 09078037
BC LL	0.0 PSF	HC-ENG DF/DF
TOT.LD.	40.0 PSF	SEQN- 9266
DUR.FAC.	1.25	FROM AH
SPACING	24.0"	JREF- 1TQ38228Z01

(9-070--Freeman Design Group Hudson -- , ** - J5B)

Top chord 2x4 SP #2 Dense
Bot chord 2x4 SP #2 Dense

Roof overhang supports 2.00 psf soffit load.

Bottom chord checked for 10.00 psf non-concurrent live load.

110 mph wind, 15.00 ft mean hgt, ASCE 7-05, PART._ENC. bldg, not located within 4.50 ft from roof edge, CAT II, EXP B, wind TC DL=5.0 psf, wind BC DL=5.0 psf. Iw=1.00 GCpi(+/-)=0.55

Wind reactions based on MWFRS pressures.

Deflection meets L/240 live and L/180 total load.

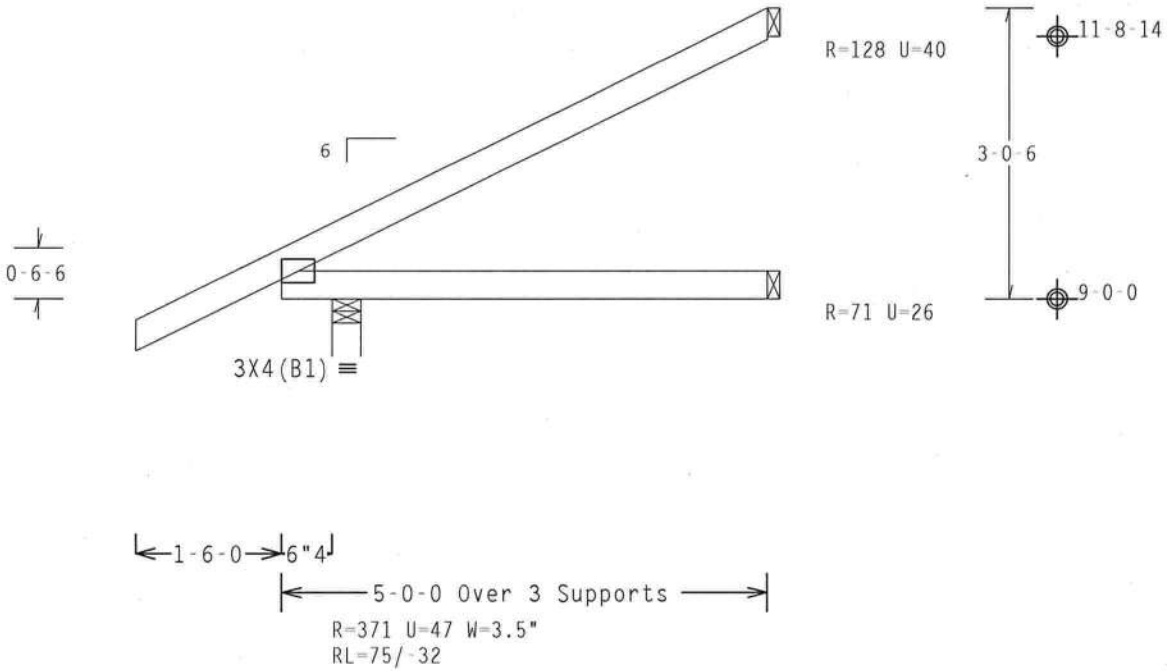

Design Crit: FBC2007Res/TPI-2002(STD)

PLT TYP. Wave | FT/RT=10%(0%)/0(0) | 8.07.00 [illegible] | QTY:1 | FL/-/4/-/-/R/- | Scale =.5"/Ft.

ALPINE
ITW Building Components Group Inc.
Haines City, FL 33844
FL COA #0 278

WARNING TRUSSES REQUIRE EXTREME CARE IN FABRICATION, HANDLING, SHIPPING, INSTALLING AND BRACING. REFER TO BCSI (BUILDING COMPONENT SAFETY INFORMATION), PUBLISHED BY TPI (TRUSS PLATE INSTITUTE, 218 NORTH LEE STREET, SUITE 312, ALEXANDRIA, VA, 22314) AND WTCA (WOOD TRUSS COUNCIL OF AMERICA, 6300 ENTERPRISE LANE, MADISON, WI 53719) FOR SAFETY PRACTICES PRIOR TO PERFORMING THESE FUNCTIONS. UNLESS OTHERWISE INDICATED TOP CHORD SHALL HAVE PROPERLY ATTACHED STRUCTURAL PANELS AND BOTTOM CHORD SHALL HAVE A PROPERLY ATTACHED RIGID CEILING.

IMPORTANTFURNISH A COPY OF THIS DESIGN TO THE INSTALLATION CONTRACTOR. ITW BCG, INC. SHALL NOT BE RESPONSIBLE FOR ANY DEVIATION FROM THIS DESIGN; ANY FAILURE TO BUILD THE TRUSS IN COMFORMANCE WITH TPI; OR FABRICATING, HANDLING, SHIPPING, INSTALLING & BRACING OF TRUSSES.
DESIGN CONFORMS WITH APPLICABLE PROVISIONS OF NDS (NATIONAL DESIGN SPEC, BY AF&PA) AND TPI. ITW BCG CONNECTOR PLATES ARE MADE OF 20/18/16GA (W,H/SS/K) ASTM A653 GRADE 40/60 (W, K/H,SS) GALV. STEEL. APPLY PLATES TO EACH FACE OF TRUSS AND, UNLESS OTHERWISE LOCATED ON THIS DESIGN, POSITION PER DRAWINGS 160A-Z. ANY INSPECTION OF PLATES FOLLOWED BY (1) SHALL BE PER ANNEX A3 OF TPI1-2002 SEC.3. A SEAL ON THIS DRAWING INDICATES ACCEPTANCE OF PROFESSIONAL ENGINEERING RESPONSIBILITY SOLELY FOR THE TRUSS COMPONENT DESIGN SHOWN. THE SUITABILITY AND USE OF THIS COMPONENT FOR ANY BUILDING IS THE RESPONSIBILITY OF THE BUILDING DESIGNER PER ANSI/TPI 1 SEC. 2.

DOUGLAS FLEMING LICENSE No. 66648 STATE OF FLORIDA PROFESSIONAL ENGINEER [illegible] 19 '09

TC LL	20.0 PSF	REF R8228- 25852
TC DL	10.0 PSF	DATE 03/19/09
BC DL	10.0 PSF	DRW HCUSR8228 09078038
BC LL	0.0 PSF	HC-ENG DF/DF
TOT.LD.	40.0 PSF	SEQN- 9272
DUR.FAC.	1.25	FROM AH
SPACING	24.0"	JREF- 1TQ38228Z01

Top chord 2x4 SP #2 Dense
Bot chord 2x4 SP #2 Dense

110 mph wind, 15.00 ft mean hgt, ASCE 7-05, PART._ENC. bldg, Located anywhere in roof, CAT II, EXP B, wind TC DL=5.0 psf, wind BC DL=5.0 psf. Iw=1.00 GCpi(+/-)=0.55

Bottom chord checked for 10.00 psf non-concurrent live load.

Provide (2)16d (0.162"x3.5") nails toe-nailed at top chord.
Provide (3)16d (0.162"x3.5") nails toe-nailed at bottom chord.

Negative reaction(s) of -385# MAX. (See below) from a non-wind load case requires uplift connection.

Wind reactions based on MWFRS pressures.

Roof overhang supports 2.00 psf soffit load.

Deflection meets L/240 live and L/180 total load.

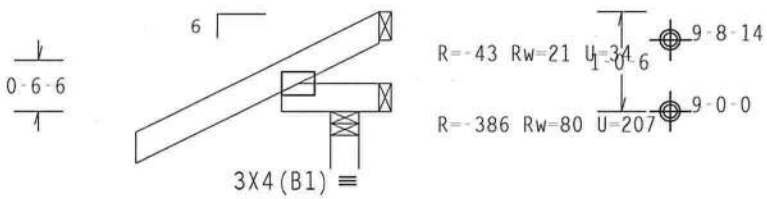

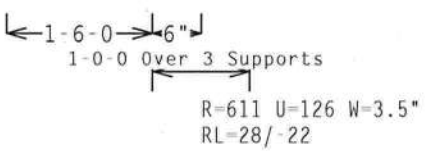

Design Crit: FBC2007Res/TPI-2002(STD)

PLT TYP. Wave | FT/RT=10%(0%)/0(0) | 8.07.00 | QTY:1 | FL/-/4/-/-/R/- | Scale =.5"/Ft.

ALPINE
ITW Building Components Group Inc.
Haines City, FL 33844
FL COA #0 278

WARNING TRUSSES REQUIRE EXTREME CARE IN FABRICATION, HANDLING, SHIPPING, INSTALLING AND BRACING. REFER TO BCSI (BUILDING COMPONENT SAFETY INFORMATION), PUBLISHED BY TPI (TRUSS PLATE INSTITUTE, 218 NORTH LEE STREET, SUITE 312, ALEXANDRIA, VA. 22314) AND WTCA (WOOD TRUSS COUNCIL OF AMERICA, 6300 ENTERPRISE LANE, MADISON, WI 53719) FOR SAFETY PRACTICES PRIOR TO PERFORMING THESE FUNCTIONS. UNLESS OTHERWISE INDICATED TOP CHORD SHALL HAVE PROPERLY ATTACHED STRUCTURAL PANELS AND BOTTOM CHORD SHALL HAVE A PROPERLY ATTACHED RIGID CEILING.

IMPORTANTFURNISH A COPY OF THIS DESIGN TO THE INSTALLATION CONTRACTOR. ITW BCG, INC. SHALL NOT BE RESPONSIBLE FOR ANY DEVIATION FROM THIS DESIGN; ANY FAILURE TO BUILD THE TRUSS IN COMFORMANCE WITH TPI; OR FABRICATING, HANDLING, SHIPPING, INSTALLING & BRACING OF TRUSSES.
DESIGN CONFORMS WITH APPLICABLE PROVISIONS OF NDS (NATIONAL DESIGN SPEC, BY AF&PA) AND TPI. ITW BCG CONNECTOR PLATES ARE MADE OF 20/18/16GA (W,H/SS/K) ASTM A653 GRADE 40/60 (W, K/H,SS) GALV. STEEL. APPLY PLATES TO EACH FACE OF TRUSS AND, UNLESS OTHERWISE LOCATED ON THIS DESIGN, POSITION PER DRAWINGS 160A-Z. ANY INSPECTION OF PLATES FOLLOWED BY (1) SHALL BE PER ANNEX A3 OF TPI1-2002 SEC.3. A SEAL ON THIS DRAWING INDICATES ACCEPTANCE OF PROFESSIONAL ENGINEERING RESPONSIBILITY SOLELY FOR THE TRUSS COMPONENT DESIGN SHOWN. THE SUITABILITY AND USE OF THIS COMPONENT FOR ANY BUILDING IS THE RESPONSIBILITY OF THE BUILDING DESIGNER PER ANSI/TPI 1 SEC. 2.

DOUGLAS FLEMING LICENSE No. 66648 STATE OF FLORIDA PROFESSIONAL ENGINEER
19 '09

TC LL	20.0 PSF	REF	R8228- 25853
TC DL	10.0 PSF	DATE	03/19/09
BC DL	10.0 PSF	DRW	HCUSR8228 09078039
BC LL	0.0 PSF	HC-ENG	DF/DF
TOT.LD.	40.0 PSF	SEQN-	9275
DUR.FAC.	1.25	FROM	AH
SPACING	24.0"	JREF-	1TQ38228Z01

(9-070--Freeman Design Group Hudson -- , ** - J3C)

Top chord 2x4 SP #2 Dense
Bot chord 2x4 SP #2 Dense

Roof overhang supports 2.00 psf soffit load.

Bottom chord checked for 10.00 psf non-concurrent live load.

110 mph wind, 15.00 ft mean hgt, ASCE 7-05, PART._ENC. bldg, Located anywhere in roof, CAT II, EXP B, wind TC DL=5.0 psf, wind BC DL=5.0 psf. Iw=1.00 GCpi(+/-)=0.55

Wind reactions based on MWFRS pressures.

Deflection meets L/240 live and L/180 total load.

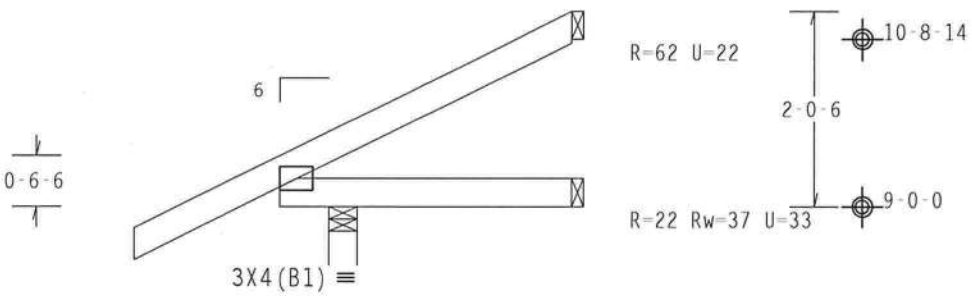

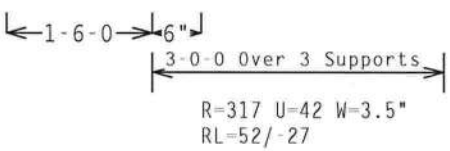

Design Crit: FBC2007Res/TPI-2002(STD)

PLT TYP. Wave | FT/RT=10%(0%)/0(0) | 8.07.00 | QTY:1 | FL/-/4/-/-/R/- | Scale =.5"/Ft.

ALPINE
ITW Building Components Group Inc.
Haines City, FL 33844
FL COA #0 278

WARNING TRUSSES REQUIRE EXTREME CARE IN FABRICATION, HANDLING, SHIPPING, INSTALLING AND BRACING. REFER TO BCSI (BUILDING COMPONENT SAFETY INFORMATION), PUBLISHED BY TPI (TRUSS PLATE INSTITUTE, 218 NORTH LEE STREET, SUITE 312, ALEXANDRIA, VA, 22314) AND WTCA (WOOD TRUSS COUNCIL OF AMERICA, 6300 ENTERPRISE LANE, MADISON, WI 53719) FOR SAFETY PRACTICES PRIOR TO PERFORMING THESE FUNCTIONS. UNLESS OTHERWISE INDICATED TOP CHORD SHALL HAVE PROPERLY ATTACHED STRUCTURAL PANELS AND BOTTOM CHORD SHALL HAVE A PROPERLY ATTACHED RIGID CEILING.

IMPORTANTFURNISH A COPY OF THIS DESIGN TO THE INSTALLATION CONTRACTOR. ITW BCG, INC. SHALL NOT BE RESPONSIBLE FOR ANY DEVIATION FROM THIS DESIGN; ANY FAILURE TO BUILD THE TRUSS IN CONFORMANCE WITH TPI; OR FABRICATING, HANDLING, SHIPPING, INSTALLING & BRACING OF TRUSSES.
DESIGN CONFORMS WITH APPLICABLE PROVISIONS OF NDS (NATIONAL DESIGN SPEC. BY AF&PA) AND TPI. ITW BCG CONNECTOR PLATES ARE MADE OF 20/18/16GA (W,H/SS/K) ASTM A653 GRADE 40/60 (W, K/H,SS) GALV. STEEL. APPLY PLATES TO EACH FACE OF TRUSS AND, UNLESS OTHERWISE LOCATED ON THIS DESIGN, POSITION PER DRAWINGS 160A-Z. ANY INSPECTION OF PLATES FOLLOWED BY (1) SHALL BE PER ANNEX A3 OF TP11-2002 SEC.3. A SEAL ON THIS DRAWING INDICATES ACCEPTANCE OF PROFESSIONAL ENGINEERING RESPONSIBILITY SOLELY FOR THE TRUSS COMPONENT DESIGN SHOWN. THE SUITABILITY AND USE OF THIS COMPONENT FOR ANY BUILDING IS THE RESPONSIBILITY OF THE BUILDING DESIGNER PER ANSI/TPI 1 SEC. 2.

DOUGLAS FLEMING LICENSE No. 66648 STATE OF FLORIDA PROFESSIONAL ENGINEER
19 '09

TC LL	20.0 PSF	REF R8228- 25854
TC DL	10.0 PSF	DATE 03/19/09
BC DL	10.0 PSF	DRW HCUSR8228 09078040
BC LL	0.0 PSF	HC-ENG DF/DF
TOT.LD.	40.0 PSF	SEQN- 9278
DUR.FAC.	1.25	FROM AH
SPACING	24.0"	JREF- 1TQ38228Z01

(9-070--Freeman Design Group Hudson -- , ** - JSC)

Top chord 2x4 SP #2 Dense
Bot chord 2x4 SP #2 Dense

Roof overhang supports 2.00 psf soffit load.

Bottom chord checked for 10.00 psf non-concurrent live load.

110 mph wind, 15.00 ft mean hgt, ASCE 7-05, PART._ENC. bldg, not located within 4.50 ft from roof edge, CAT II, EXP B, wind TC DL=5.0 psf, wind BC DL=5.0 psf. Iw=1.00 GCpi(+/-)=0.55

Wind reactions based on MWFRS pressures.

Deflection meets L/240 live and L/180 total load.

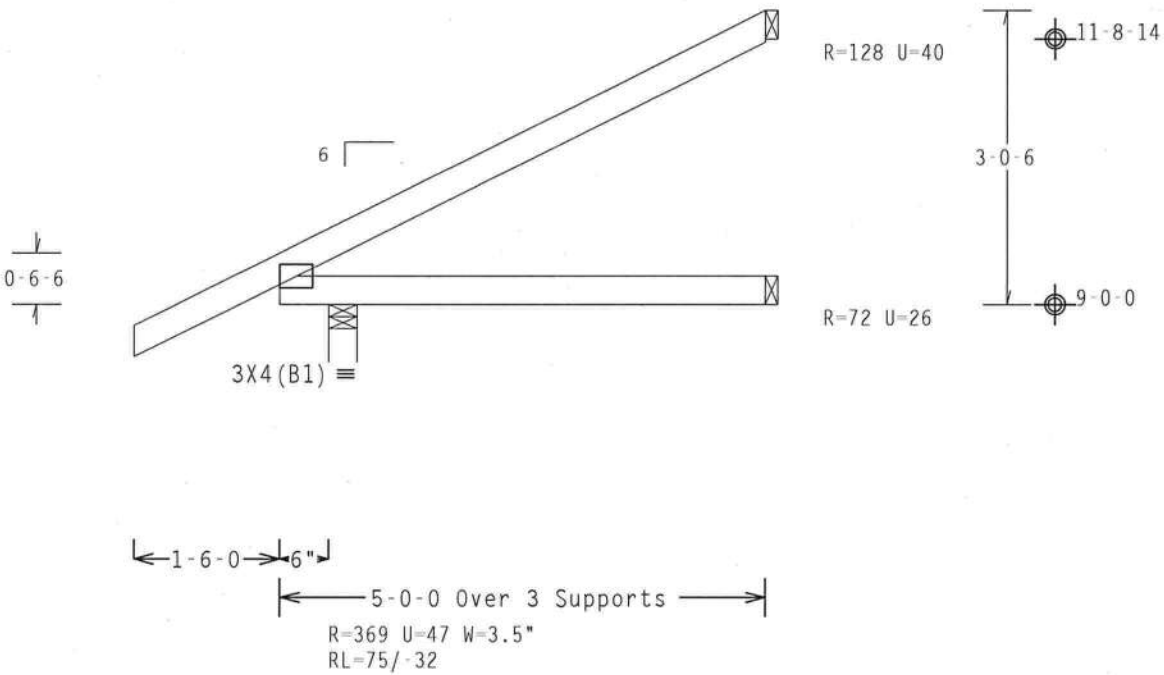

Design Crit: FBC2007Res/TPI-2002(STD)

PLT TYP. Wave | FT/RT=10%(0%)/0(0) | 8.07.00 | QTY:1 | FL/-/4/-/-/R/- | Scale =.5"/Ft.

ALPINE
ITW Building Components Group Inc.
Haines City, FL 33844
FL COA #0 278

WARNING TRUSSES REQUIRE EXTREME CARE IN FABRICATION, HANDLING, SHIPPING, INSTALLING AND BRACING. REFER TO BCSI (BUILDING COMPONENT SAFETY INFORMATION), PUBLISHED BY TPI (TRUSS PLATE INSTITUTE, 218 NORTH LEE STREET, SUITE 312, ALEXANDRIA, VA, 22314) AND WTCA (WOOD TRUSS COUNCIL OF AMERICA, 6300 ENTERPRISE LANE, MADISON, WI 53719) FOR SAFETY PRACTICES PRIOR TO PERFORMING THESE FUNCTIONS. UNLESS OTHERWISE INDICATED TOP CHORD SHALL HAVE PROPERLY ATTACHED STRUCTURAL PANELS AND BOTTOM CHORD SHALL HAVE A PROPERLY ATTACHED RIGID CEILING.

IMPORTANTFURNISH A COPY OF THIS DESIGN TO THE INSTALLATION CONTRACTOR. ITW BCG, INC. SHALL NOT BE RESPONSIBLE FOR ANY DEVIATION FROM THIS DESIGN; ANY FAILURE TO BUILD THE TRUSS IN COMFORMANCE WITH TPI; OR FABRICATING, HANDLING, SHIPPING, INSTALLING & BRACING OF TRUSSES.
DESIGN CONFORMS WITH APPLICABLE PROVISIONS OF NDS (NATIONAL DESIGN SPEC. BY AF&PA) AND TPI. ITW BCG CONNECTOR PLATES ARE MADE OF 20/18/16GA (W,H/SS/K) ASTM A653 GRADE 40/60 (W, K/H,SS) GALV. STEEL. APPLY PLATES TO EACH FACE OF TRUSS AND, UNLESS OTHERWISE LOCATED ON THIS DESIGN, POSITION PER DRAWINGS 160A-Z. ANY INSPECTION OF PLATES FOLLOWED BY (1) SHALL BE PER ANNEX A3 OF TPI1-2002 SEC.3. A SEAL ON THIS DRAWING INDICATES ACCEPTANCE OF PROFESSIONAL ENGINEERING RESPONSIBILITY SOLELY FOR THE TRUSS COMPONENT DESIGN SHOWN. THE SUITABILITY AND USE OF THIS COMPONENT FOR ANY BUILDING IS THE RESPONSIBILITY OF THE BUILDING DESIGNER PER ANSI/TPI 1 SEC. 2.

DOUGLAS FLEMING LICENSE No. 66648 STATE OF FLORIDA PROFESSIONAL ENGINEER
MAR 19 '09

TC LL	20.0 PSF	REF R8228- 25855
TC DL	10.0 PSF	DATE 03/19/09
BC DL	10.0 PSF	DRW HCUSR8228 09078041
BC LL	0.0 PSF	HC-ENG DF/DF
TOT.LD.	40.0 PSF	SEQN- 9281
DUR.FAC.	1.25	FROM AH
SPACING	24.0"	JREF- 1TQ38228Z01

Top chord 2x4 SP #2 Dense
Bot chord 2x4 SP #2 Dense

Bottom chord checked for 10.00 psf non-concurrent live load.

Deflection meets L/240 live and L/180 total load.

110 mph wind, 15.00 ft mean hgt, ASCE 7-05, PART._ENC. bldg, Located anywhere in roof, CAT II, EXP B, wind TC DL=5.0 psf, wind BC DL=5.0 psf. Iw=1.00 GCpi(+/-)=0.55

Wind reactions based on MWFRS pressures.

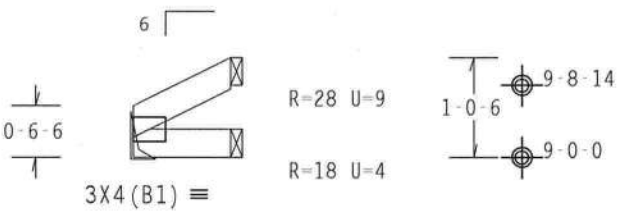

1-0-0 Over 3 Supports

R=45 U=3

Design Crit: FBC2007Res/TPI-2002(STD)

PLT TYP. Wave FT/RT=10%(0%)/0(0) 8.07.00 QTY:1 FL/-/4/-/-/R/- Scale =.5"/Ft.

ALPINE
ITW Building Components Group Inc.
Haines City, FL 33844
FL COA #0 278

WARNING TRUSSES REQUIRE EXTREME CARE IN FABRICATION, HANDLING, SHIPPING, INSTALLING AND BRACING. REFER TO BCSI (BUILDING COMPONENT SAFETY INFORMATION), PUBLISHED BY TPI (TRUSS PLATE INSTITUTE, 218 NORTH LEE STREET, SUITE 312, ALEXANDRIA, VA, 22314) AND WTCA (WOOD TRUSS COUNCIL OF AMERICA, 6300 ENTERPRISE LANE, MADISON, WI 53719) FOR SAFETY PRACTICES PRIOR TO PERFORMING THESE FUNCTIONS. UNLESS OTHERWISE INDICATED TOP CHORD SHALL HAVE PROPERLY ATTACHED STRUCTURAL PANELS AND BOTTOM CHORD SHALL HAVE A PROPERLY ATTACHED RIGID CEILING.

IMPORTANTFURNISH A COPY OF THIS DESIGN TO THE INSTALLATION CONTRACTOR. ITW BCG, INC. SHALL NOT BE RESPONSIBLE FOR ANY DEVIATION FROM THIS DESIGN; ANY FAILURE TO BUILD THE TRUSS IN COMFORMANCE WITH TPI; OR FABRICATING, HANDLING, SHIPPING, INSTALLING & BRACING OF TRUSSES. DESIGN CONFORMS WITH APPLICABLE PROVISIONS OF NDS (NATIONAL DESIGN SPEC. BY AF&PA) AND TPI. ITW BCG CONNECTOR PLATES ARE MADE OF 20/18/16GA (W,H/SS/K) ASTM A653 GRADE 40/60 (W, K/H,SS) GALV. STEEL. APPLY PLATES TO EACH FACE OF TRUSS AND, UNLESS OTHERWISE LOCATED ON THIS DESIGN, POSITION PER DRAWINGS 160A-Z. ANY INSPECTION OF PLATES FOLLOWED BY (I) SHALL BE PER ANNEX A3 OF TPI1-2002 SEC.3. A SEAL ON THIS DRAWING INDICATES ACCEPTANCE OF PROFESSIONAL ENGINEERING RESPONSIBILITY SOLELY FOR THE TRUSS COMPONENT DESIGN SHOWN. THE SUITABILITY AND USE OF THIS COMPONENT FOR ANY BUILDING IS THE RESPONSIBILITY OF THE BUILDING DESIGNER PER ANSI/TPI 1 SEC. 2.

DOUGLAS FLEMING LICENSE No. 66648 STATE OF FLORIDA PROFESSIONAL ENGINEER
19 '09

TC LL	20.0 PSF	REF R8228- 25856
TC DL	10.0 PSF	DATE 03/19/09
BC DL	10.0 PSF	DRW HCUSR8228 09078042
BC LL	0.0 PSF	HC-ENG DF/DF
TOT.LD.	40.0 PSF	SEQN: 9284
DUR.FAC.	1.25	FROM AH
SPACING	24.0"	JREF- 1TQ38228Z01

(9-070--Freeman Design Group Hudson -- , ** - 33D)

Top chord 2x4 SP #2 Dense
Bot chord 2x4 SP #2 Dense

Bottom chord checked for 10.00 psf non-concurrent live load.

Deflection meets L/240 live and L/180 total load.

110 mph wind, 15.00 ft mean hgt, ASCE 7-05, PART._ENC. bldg, Located anywhere in roof, CAT II, EXP B, wind TC DL=5.0 psf, wind BC DL=5.0 psf. Iw=1.00 GCpi(+/-)=0.55

Wind reactions based on MWFRS pressures.

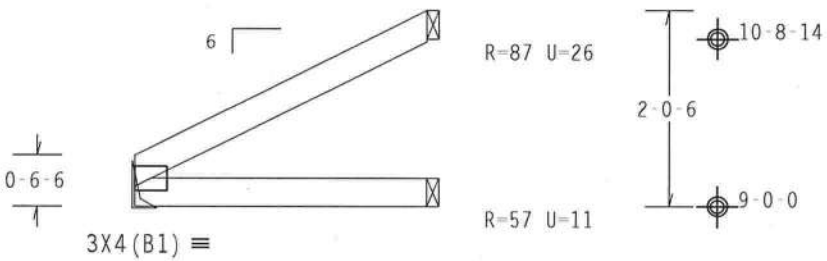

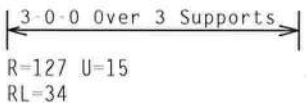

Design Crit: FBC2007Res/TPI-2002(STD)

PLT TYP. Wave | FT/RT=10%(0%)/0(0) | 8.07.00 | QTY:1 | FL/-/4/-/-/R/- | Scale =.5"/Ft.

ALPINE
ITW Building Components Group Inc.
Haines City, FL 33844
FL COA #0 278

WARNING TRUSSES REQUIRE EXTREME CARE IN FABRICATION, HANDLING, SHIPPING, INSTALLING AND BRACING. REFER TO BCSI (BUILDING COMPONENT SAFETY INFORMATION), PUBLISHED BY TPI (TRUSS PLATE INSTITUTE, 218 NORTH LEE STREET, SUITE 312, ALEXANDRIA, VA, 22314) AND WTCA (WOOD TRUSS COUNCIL OF AMERICA, 6300 ENTERPRISE LANE, MADISON, WI 53719) FOR SAFETY PRACTICES PRIOR TO PERFORMING THESE FUNCTIONS. UNLESS OTHERWISE INDICATED TOP CHORD SHALL HAVE PROPERLY ATTACHED STRUCTURAL PANELS AND BOTTOM CHORD SHALL HAVE A PROPERLY ATTACHED RIGID CEILING.

IMPORTANTFURNISH A COPY OF THIS DESIGN TO THE INSTALLATION CONTRACTOR. ITW BCG, INC. SHALL NOT BE RESPONSIBLE FOR ANY DEVIATION FROM THIS DESIGN; ANY FAILURE TO BUILD THE TRUSS IN COMFORMANCE WITH TPI; OR FABRICATING, HANDLING, SHIPPING, INSTALLING & BRACING OF TRUSSES.
DESIGN CONFORMS WITH APPLICABLE PROVISIONS OF NDS (NATIONAL DESIGN SPEC. BY AF&PA) AND TPI. ITW BCG CONNECTOR PLATES ARE MADE OF 20/18/16GA (W,H/SS/K) ASTM A653 GRADE 40/60 (W, K/H,SS) GALV. STEEL. APPLY PLATES TO EACH FACE OF TRUSS AND, UNLESS OTHERWISE LOCATED ON THIS DESIGN, POSITION PER DRAWINGS 160A-2. ANY INSPECTION OF PLATES FOLLOWED BY (1) SHALL BE PER ANNEX A3 OF TPI1-2002 SEC.3. A SEAL ON THIS DRAWING INDICATES ACCEPTANCE OF PROFESSIONAL ENGINEERING RESPONSIBILITY SOLELY FOR THE TRUSS COMPONENT DESIGN SHOWN. THE SUITABILITY AND USE OF THIS COMPONENT FOR ANY BUILDING IS THE RESPONSIBILITY OF THE BUILDING DESIGNER PER ANSI/TPI 1 SEC. 2.

DOUGLAS FLEMING LICENSE No. 66648 STATE OF FLORIDA PROFESSIONAL ENGINEER

19 '09

TC LL	20.0 PSF	REF	R8228- 25857
TC DL	10.0 PSF	DATE	03/19/09
BC DL	10.0 PSF	DRW	HCUSR8228 09078043
BC LL	0.0 PSF	HC-ENG	DF/DF
TOT.LD.	40.0 PSF	SEQN-	9288
DUR.FAC.	1.25	FROM	AH
SPACING	24.0"	JREF-	1TQ38228Z01

(9-070--Freeman Design Group Hudson -- . ** - J5D)

Top chord 2x4 SP #2 Dense
Bot chord 2x4 SP #2 Dense

Bottom chord checked for 10.00 psf non-concurrent live load.

Deflection meets L/240 live and L/180 total load.

110 mph wind, 15.00 ft mean hgt, ASCE 7-05, PART. ENC. bldg, not located within 4.50 ft from roof edge, CAT II, EXP B, wind TC DL=5.0 psf, wind BC DL=5.0 psf. Iw=1.00 GCpi(+/-)=0.55

Wind reactions based on MWFRS pressures.

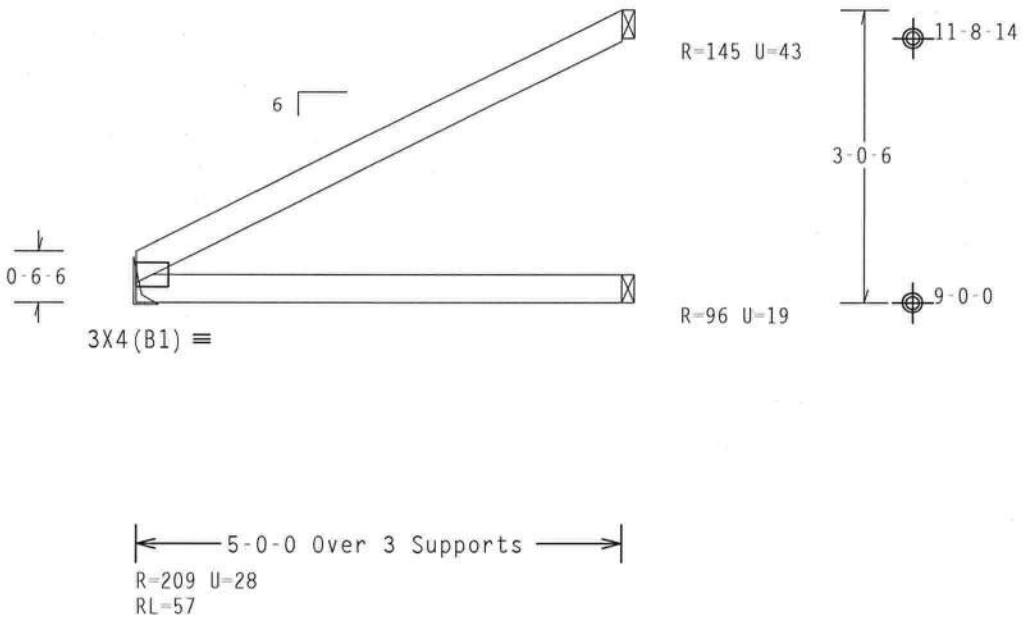

Design Crit: FBC2007Res/TPI-2002(STD)

PLT TYP. Wave | FT/RT=10%(0%)/0(0) | 8.07.00 | QTY:1 | FL/-/4/-/-/R/- | Scale =.5"/Ft.

ALPINE
ITW Building Components Group Inc.
Haines City, FL 33844
FL COA #0 278

WARNING TRUSSES REQUIRE EXTREME CARE IN FABRICATION, HANDLING, SHIPPING, INSTALLING AND BRACING. REFER TO BCSI (BUILDING COMPONENT SAFETY INFORMATION), PUBLISHED BY TPI (TRUSS PLATE INSTITUTE, 218 NORTH LEE STREET, SUITE 312, ALEXANDRIA, VA. 22314) AND WTCA (WOOD TRUSS COUNCIL OF AMERICA, 6300 ENTERPRISE LANE, MADISON, WI 53719) FOR SAFETY PRACTICES PRIOR TO PERFORMING THESE FUNCTIONS. UNLESS OTHERWISE INDICATED TOP CHORD SHALL HAVE PROPERLY ATTACHED STRUCTURAL PANELS AND BOTTOM CHORD SHALL HAVE A PROPERLY ATTACHED RIGID CEILING.

IMPORTANT FURNISH A COPY OF THIS DESIGN TO THE INSTALLATION CONTRACTOR. ITW BCG, INC. SHALL NOT BE RESPONSIBLE FOR ANY DEVIATION FROM THIS DESIGN; ANY FAILURE TO BUILD THE TRUSS IN COMFORMANCE WITH TPI; OR FABRICATING, HANDLING, SHIPPING, INSTALLING & BRACING OF TRUSSES. DESIGN CONFORMS WITH APPLICABLE PROVISIONS OF NDS (NATIONAL DESIGN SPEC, BY AF&PA) AND TPI. ITW BCG CONNECTOR PLATES ARE MADE OF 20/18/16GA (W,H/SS/K) ASTM A653 GRADE 40/60 (W, K/H,SS) GALV. STEEL. APPLY PLATES TO EACH FACE OF TRUSS AND, UNLESS OTHERWISE LOCATED ON THIS DESIGN, POSITION PER DRAWINGS 160A-Z. ANY INSPECTION OF PLATES FOLLOWED BY (1) SHALL BE PER ANNEX A3 OF TPI1-2002 SEC.3. A SEAL ON THIS DRAWING INDICATES ACCEPTANCE OF PROFESSIONAL ENGINEERING RESPONSIBILITY SOLELY FOR THE TRUSS COMPONENT DESIGN SHOWN. THE SUITABILITY AND USE OF THIS COMPONENT FOR ANY BUILDING IS THE RESPONSIBILITY OF THE BUILDING DESIGNER PER ANSI/TPI 1 SEC. 2.

DOUGLAS FLEMING LICENSE No. 66648 STATE OF FLORIDA PROFESSIONAL ENGINEER
MAR 19 '09

TC LL	20.0 PSF	REF	R8228- 25858
TC DL	10.0 PSF	DATE	03/19/09
BC DL	10.0 PSF	DRW	HCUSR8228 09078044
BC LL	0.0 PSF	HC-ENG	DF/DF
TOT.LD.	40.0 PSF	SEQN-	9292
DUR.FAC.	1.25	FROM	AH
SPACING	24.0"	JREF-	1TQ38228Z01

Permit # 27985

ITW Building Components Group, Inc.

1950 Marley Drive Haines City, FL 33844
Florida Engineering Certificate of Authorization Number: 0 278
Florida Certificate of Product Approval # FL1999
 Document ID:1TUD8228Z0120141803

Truss Fabricator:	Anderson Truss Company
Job Identification:	9-070--Freeman Design Group Hudson -- , **
Truss Count:	55
Model Code:	Florida Building Code 2007 and 2009 Supplement
Truss Criteria:	FBC2007Res/TPI-2002(STD)
Engineering Software:	Alpine Software,Versions 8.07, 9.02.
Structural Engineer of Record:	The identity of the structural EOR did not exist as of
Address:	the seal date per section 61G15-31.003(5a) of the FAC
Minimum Design Loads:	Roof - 40.0 PSF @ 1.25 Duration
	Floor - N/A
	Wind - 110 MPH ASCE 7-05 -Closed

Seal Date: 08/20/2009

-Truss Design Engineer-
Doug Fleming
Florida License Number: 66648
1950 Marley Drive
Haines City, FL 33844

Notes:

1. Determination as to the suitability of these truss components for the structure is the responsibility of the building designer/engineer of record, as defined in ANSI/TPI 1
2. The drawing date shown on this index sheet must match the date shown on the individual truss component drawing.
3. As shown on attached drawings; the drawing number is preceded by: HCUSR8228

Details: BRCLBSUB-PB120-

#	Ref Description	Drawing#	Date
1	19871--H7A	09232001	08/20/09
2	19872--H7AA	09232006	08/20/09
3	19873--H9A	09232031	08/20/09
4	19874--H9AA	09232007	08/20/09
5	19875--H11A	09232041	08/20/09
6	19876--H11AA	09232008	08/20/09
7	19877--H13AA	09232009	08/20/09
8	19878--H15AA	09232010	08/20/09
9	19879--H17AA	09232011	08/20/09
10	19880--H19A	09232050	08/20/09
11	19881--H19AA	09232013	08/20/09
12	19882--H21A	09232015	08/20/09
13	19883--H21AA	09232002	08/20/09
14	19884--A1	09232003	08/20/09
15	19885--A2	09232004	08/20/09
16	19886--A3	09232005	08/20/09
17	19887--H17A	09232005	08/20/09
18	19888--H13A	09232004	08/20/09
19	19889--H15A	09232001	08/20/09
20	19890--H7B	09232014	08/20/09
21	19891--H9B	09232040	08/20/09
22	19892--H11B	09232042	08/20/09
23	19893--C2-GDR	09232020	08/20/09
24	19894--C1	09232012	08/20/09
25	19895--J1	09232046	08/20/09
26	19896--HJ7	09232043	08/20/09
27	19897--J3	09232045	08/20/09
28	19898--J5	09232044	08/20/09
29	19899--EJ7	09232027	08/20/09
30	19900--EJ7A	09232047	08/20/09
31	19901--J1A	09232021	08/20/09
32	19902--HJ7A	09232017	08/20/09
33	19903--HJ7B	09232022	08/20/09
34	19904--HJ7D	09232030	08/20/09
35	19905--HJ7C	09232034	08/20/09
36	19906--J1B	09232025	08/20/09
37	19907--J3A	09232019	08/20/09
38	19908--J3B	09232024	08/20/09
39	19909--J5A	09232018	08/20/09
40	19910--J5B	09232023	08/20/09
41	19911--J1C	09232037	08/20/09
42	19912--J3C	09232036	08/20/09
43	19913--J5C	09232035	08/20/09
44	19914--J1D	09232033	08/20/09
45	19915--J3D	09232032	08/20/09
46	19916--J5D	09232029	08/20/09
47	19917--EJ7B	09232026	08/20/09
48	19918--EJ7C	09232028	08/20/09
49	19919--EJ7D	09232039	08/20/09
50	19920--EJ7E	09232038	08/20/09
51	19921--M2	09232002	08/20/09
52	19922--M1	09232003	08/20/09
53	19923--PB1	09232048	08/20/09
54	19924--PB2	09232016	08/20/09
55	19925--PB3	09232049	08/20/09

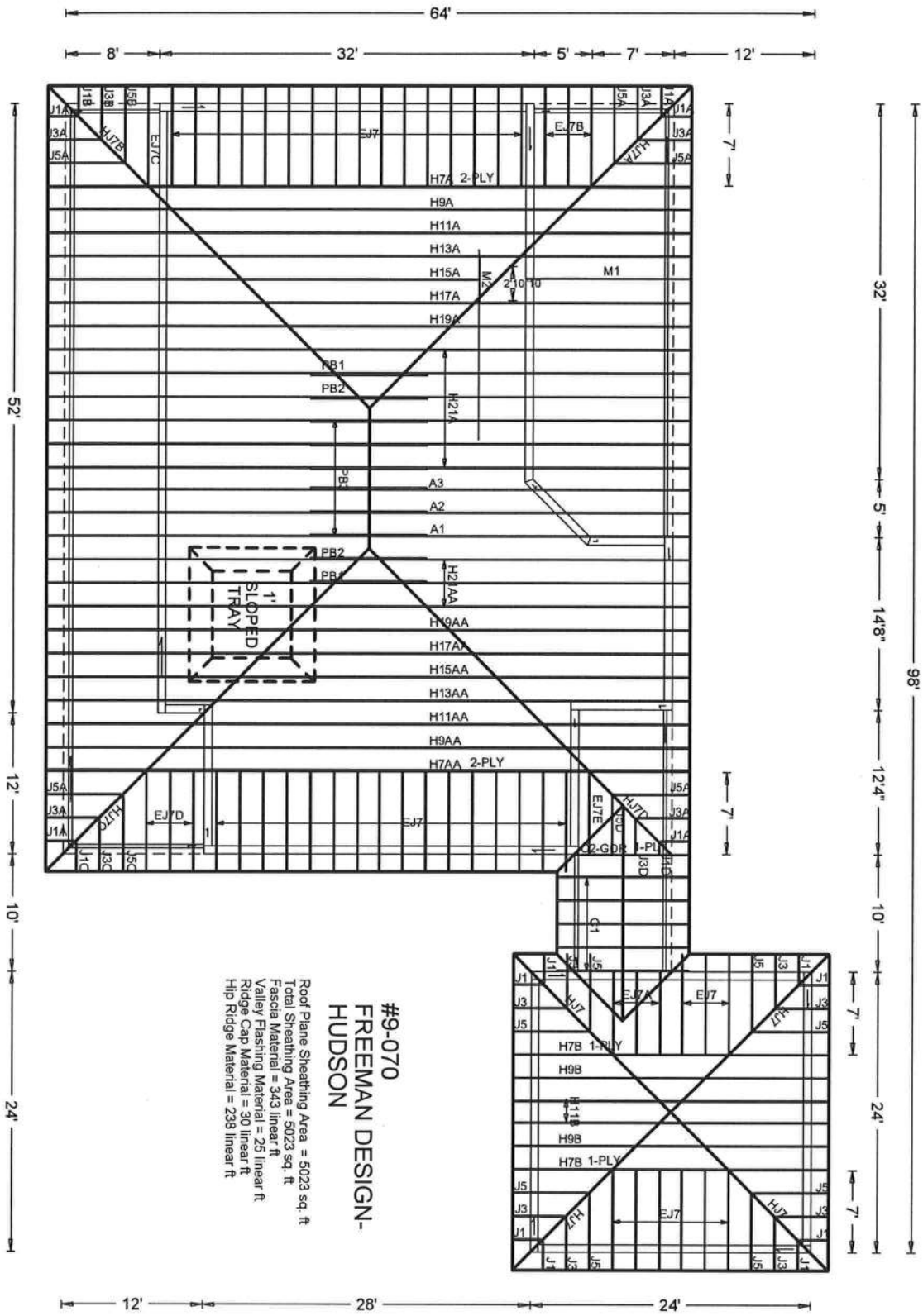

#9-070
FREEMAN DESIGN-HUDSON

Roof Plane Sheathing Area = 5023 sq. ft
Total Sheathing Area = 5023 sq. ft
Fascia Material = 343 linear ft
Valley Flashing Material = 25 linear ft
Ridge Cap Material = 30 linear ft
Hip Ridge Material = 238 linear ft

JOB NO: 9-070	JOB DESCRIPTION:: Freeman Design Group /: Hudson	
PAGE NO: 1 OF 1		

Top chord 2x6 SP #2
Bot chord 2x6 SP #2
Webs 2x4 SP #3

Negative reaction(s) of -547# MAX. (See below) from a non-wind load case requires uplift connection. **

110 mph wind, 15.00 ft mean hgt, ASCE 7-05, PART._ENC. bldg, Located anywhere in roof, CAT II, EXP B, wind TC DL=5.0 psf, wind BC DL=5.0 psf. Iw=1.00 GCpi(+/-)=0.55

Roof overhang supports 2.00 psf soffit load.

#1 hip supports 7-0-0 jacks W/2 panel TC and no end vert.

Deflection meets L/240 live and L/180 total load.

WARNING: Furnish a copy of this DWG to the installation contractor. Special care must be taken during handling, shipping and installation of trusses. See "WARNING" note below.

TRUSS MAY NOT BE INSTALLED END FOR END.

2 COMPLETE TRUSSES REQUIRED

Nailing Schedule: (12d_Common_(0.148"x3.25",_min.)_nails)
Top Chord: 1 Row @12.00" o.c.
Bot Chord: 1 Row @12.00" o.c.
Webs : 1 Row @ 4" o.c.
Use equal spacing between rows and stagger nails in each row to avoid splitting.

Wind reactions based on MWFRS pressures.

In lieu of structural panels use purlins to brace all flat TC @ 24" OC.

Left side jacks have 7-0-0 setback with 0-5-8 cant and 1-6-0 overhang. End jacks have 7-0-0 setback with 0-5-8 cant and 1-6-0 overhang. Right side jacks have 7-0-0 setback with 0-5-8 cant and 1-6-0 overhang.

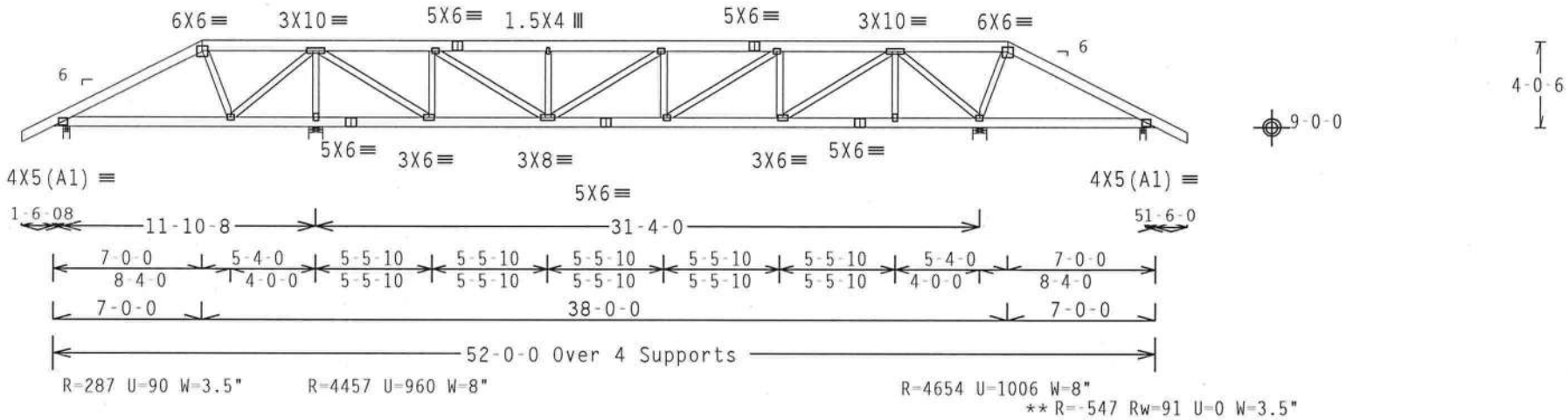

Note: All Plates Are 3X4 Except As Shown.

Design Crit: FBC2007Res/TPI-2002(STD)

PLT TYP. Wave FT/RT=10%(0%)/0(0) 8.07.00 QTY:1 FL/-/4/-/-/R/- Scale =.125"/Ft.

ALPINE
ITW Building Components Group Inc.
Haines City, FL 33844
FL Co. #0278

WARNING TRUSSES REQUIRE EXTREME CARE IN FABRICATION, HANDLING, SHIPPING, INSTALLING AND BRACING. REFER TO BCSI (BUILDING COMPONENT SAFETY INFORMATION), PUBLISHED BY TPI (TRUSS PLATE INSTITUTE, 218 NORTH LEE STREET, SUITE 312, ALEXANDRIA, VA, 22314) AND WTCA (WOOD TRUSS COUNCIL OF AMERICA, 6300 ENTERPRISE LANE, MADISON, WI 53719) FOR SAFETY PRACTICES PRIOR TO PERFORMING THESE FUNCTIONS. UNLESS OTHERWISE INDICATED TOP CHORD SHALL HAVE PROPERLY ATTACHED STRUCTURAL PANELS AND BOTTOM CHORD SHALL HAVE A PROPERLY ATTACHED RIGID CEILING.

IMPORTANT FURNISH A COPY OF THIS DESIGN TO THE INSTALLATION CONTRACTOR. ITW BCG, INC. SHALL NOT BE RESPONSIBLE FOR ANY DEVIATION FROM THIS DESIGN; ANY FAILURE TO BUILD THE TRUSS IN CONFORMANCE WITH TPI; OR FABRICATING, HANDLING, SHIPPING, INSTALLING & BRACING OF TRUSSES. DESIGN CONFORMS WITH APPLICABLE PROVISIONS OF NDS (NATIONAL DESIGN SPEC. BY AF&PA) AND TPI. ITW BCG CONNECTOR PLATES ARE MADE OF 20/18/16GA (W,H/SS/K) ASTM A653 GRADE 40/60 (W, K/H,SS) GALV. STEEL. APPLY PLATES TO EACH FACE OF TRUSS AND, UNLESS OTHERWISE LOCATED ON THIS DESIGN, POSITION PER DRAWINGS 160A-Z. ANY INSPECTION OF PLATES FOLLOWED BY (1) SHALL BE PER ANNEX A3 OF TPI1-2002 SEC.3. A SEAL ON THIS DRAWING INDICATES ACCEPTANCE OF PROFESSIONAL ENGINEERING RESPONSIBILITY SOLELY FOR THE TRUSS COMPONENT DESIGN SHOWN. THE SUITABILITY AND USE OF THIS COMPONENT FOR ANY BUILDING IS THE RESPONSIBILITY OF THE BUILDING DESIGNER PER ANSI/TPI 1 SEC. 2.

DOUGLAS FLEMING LICENSE No. 66648 STATE OF FLORIDA PROFESSIONAL ENGINEER

TC LL	20.0 PSF	REF R8228- 19871
TC DL	10.0 PSF	DATE 08/20/09
BC DL	10.0 PSF	DRW HCUSR8228 09232001
BC LL	0.0 PSF	HC-ENG DF/DF
TOT.LD.	40.0 PSF	SEQN- 9346
DUR.FAC.	1.25	FROM AH
SPACING	SEE ABOVE	JREF- 1TUD8228Z01

Top chord 2x6 SP #2
Bot chord 2x6 SP #2
Webs 2x4 SP #3

Negative reaction(s) of -549# MAX. (See below) from a non-wind load case requires uplift connection. **

110 mph wind, 15.00 ft mean hgt, ASCE 7-05, PART._ENC. bldg, Located anywhere in roof, CAT II, EXP B, wind TC DL=5.0 psf, wind BC DL=5.0 psf. Iw=1.00 GCpi(+/-)=0.55

Roof overhang supports 2.00 psf soffit load.

#1 hip supports 7-0-0 jacks W/2 panel TC and no end vert.

Deflection meets L/240 live and L/180 total load.

WARNING: Furnish a copy of this DWG to the installation contractor. Special care must be taken during handling, shipping and installation of trusses. See "WARNING" note below.

TRUSS MAY NOT BE INSTALLED END FOR END.

2 COMPLETE TRUSSES REQUIRED

Nailing Schedule: (12d_Common_(0.148"x3.25",_min.)_nails)
Top Chord: 1 Row @12.00" o.c.
Bot Chord: 1 Row @12.00" o.c.
Webs : 1 Row @ 4" o.c.
Use equal spacing between rows and stagger nails in each row to avoid splitting.

Wind reactions based on MWFRS pressures.

In lieu of structural panels use purlins to brace all flat TC @ 24" OC.

Left side jacks have 7-0-0 setback with 0-5-8 cant and 1-6-0 overhang. End jacks have 7-0-0 setback with 0-5-8 cant and 1-6-0 overhang. Right side jacks have 7-0-0 setback with 0-5-8 cant and 1-6-0 overhang.

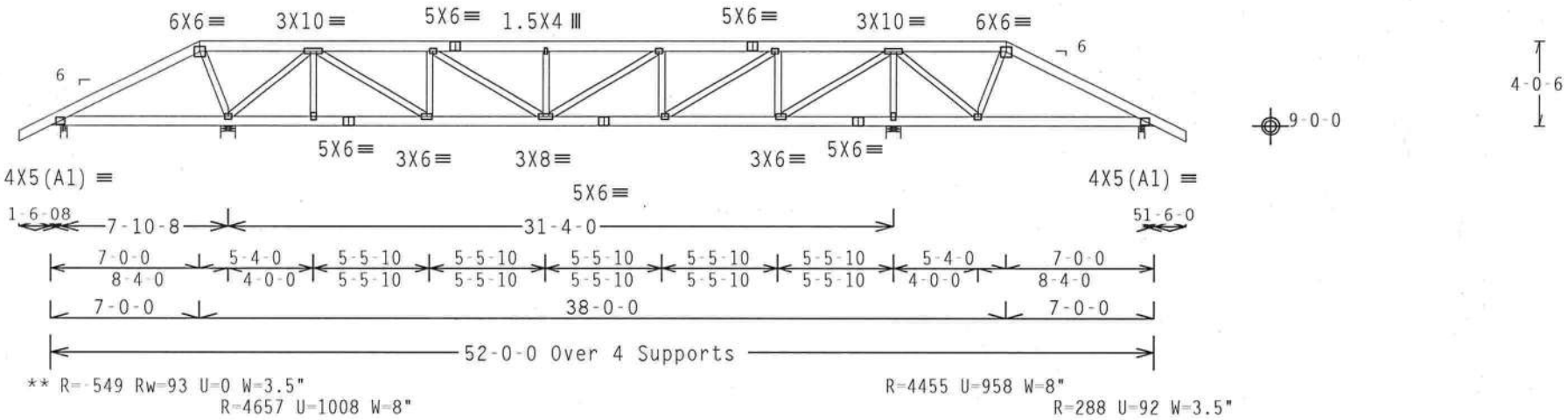

Note: All Plates Are 3X4 Except As Shown.

Design Crit: FBC2007Res/TPI-2002(STD)

PLT TYP. Wave FT/RT=10%(0%)/0(0) 8.07.00 QTY:1 FL/-/4/-/-/R/- Scale =.125"/Ft.

ALPINE
ITW Building Components Group Inc.
Haines City, FL 33844
FL C[illegible]278

WARNING TRUSSES REQUIRE EXTREME CARE IN FABRICATION, HANDLING, SHIPPING, INSTALLING AND BRACING. REFER TO BCSI (BUILDING COMPONENT SAFETY INFORMATION), PUBLISHED BY TPI (TRUSS PLATE INSTITUTE, 218 NORTH LEE STREET, SUITE 312, ALEXANDRIA, VA. 22314) AND WTCA (WOOD TRUSS COUNCIL OF AMERICA, 6300 ENTERPRISE LANE, MADISON, WI 53719) FOR SAFETY PRACTICES PRIOR TO PERFORMING THESE FUNCTIONS. UNLESS OTHERWISE INDICATED TOP CHORD SHALL HAVE PROPERLY ATTACHED STRUCTURAL PANELS AND BOTTOM CHORD SHALL HAVE A PROPERLY ATTACHED RIGID CEILING.

IMPORTANT FURNISH A COPY OF THIS DESIGN TO THE INSTALLATION CONTRACTOR. ITW BCG, INC, SHALL NOT BE RESPONSIBLE FOR ANY DEVIATION FROM THIS DESIGN; ANY FAILURE TO BUILD THE TRUSS IN CONFORMANCE WITH TPI; OR FABRICATING, HANDLING, SHIPPING, INSTALLING & BRACING OF TRUSSES. DESIGN CONFORMS WITH APPLICABLE PROVISIONS OF NDS (NATIONAL DESIGN SPEC, BY AF&PA) AND TPI. ITW BCG CONNECTOR PLATES ARE MADE OF 20/18/16GA (W,H/SS/K) ASTM A653 GRADE 40/60 (W, K/H,SS) GALV. STEEL. APPLY PLATES TO EACH FACE OF TRUSS AND, UNLESS OTHERWISE LOCATED ON THIS DESIGN, POSITION PER DRAWINGS 160A-Z. ANY INSPECTION OF PLATES FOLLOWED BY (1) SHALL BE PER ANNEX A3 OF TPI1-2002 SEC.3. A SEAL ON THIS DRAWING INDICATES ACCEPTANCE OF PROFESSIONAL ENGINEERING RESPONSIBILITY SOLELY FOR THE TRUSS COMPONENT DESIGN SHOWN. THE SUITABILITY AND USE OF THIS COMPONENT FOR ANY BUILDING IS THE RESPONSIBILITY OF THE BUILDING DESIGNER PER ANSI/TPI 1 SEC. 2.

DOUGLAS FLEMING LICENSE No. 66648 STATE OF FLORIDA PROFESSIONAL ENGINEER
[illegible] 20 '09

TC LL	20.0 PSF	REF	R8228- 19872
TC DL	10.0 PSF	DATE	08/20/09
BC DL	10.0 PSF	DRW	HCUSR8228 09232006
BC LL	0.0 PSF	HC-ENG	DF/DF
TOT.LD.	40.0 PSF	SEQN-	9354
DUR.FAC.	1.25	FROM	AH
SPACING	SEE ABOVE	JREF-	1TUD8228Z01

Top chord 2x6 SP #2
Bot chord 2x6 SP #2
Webs 2x4 SP #3

Roof overhang supports 2.00 psf soffit load.

In lieu of structural panels use purlins to brace all flat TC @ 24" OC.

WARNING: Furnish a copy of this DWG to the installation contractor. Special care must be taken during handling, shipping and installation of trusses. See "WARNING" note below.

110 mph wind, 15.00 ft mean hgt, ASCE 7-05, PART._ENC. bldg, not located within 6.50 ft from roof edge, CAT II, EXP B, wind TC DL=5.0 psf, wind BC DL=5.0 psf. Iw=1.00 GCpi(+/-)=0.55

Wind reactions based on MWFRS pressures.

Bottom chord checked for 10.00 psf non-concurrent live load.

Deflection meets L/240 live and L/180 total load.

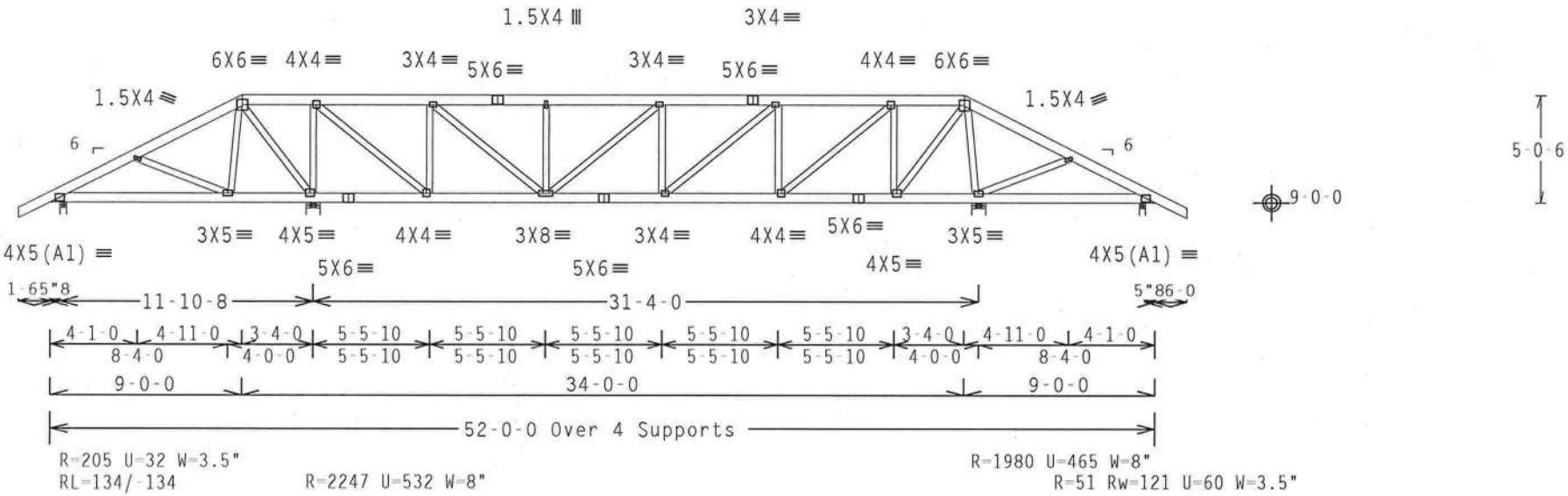

Design Crit: FBC2007Res/TPI-2002(STD)

PLT TYP. Wave FT/RT=10%(0%)/0(0) 8.07.00 QTY:1 FL/-/4/-/-/R/- Scale =.125"/Ft.

ALPINE
ITW Building Components Group Inc.
Haines City, FL 33844
FL COA #0278

WARNING TRUSSES REQUIRE EXTREME CARE IN FABRICATION, HANDLING, SHIPPING, INSTALLING AND BRACING. REFER TO BCSI (BUILDING COMPONENT SAFETY INFORMATION), PUBLISHED BY TPI (TRUSS PLATE INSTITUTE, 218 NORTH LEE STREET, SUITE 312, ALEXANDRIA, VA, 22314) AND WTCA (WOOD TRUSS COUNCIL OF AMERICA, 6300 ENTERPRISE LANE, MADISON, WI 53719) FOR SAFETY PRACTICES PRIOR TO PERFORMING THESE FUNCTIONS. UNLESS OTHERWISE INDICATED TOP CHORD SHALL HAVE PROPERLY ATTACHED STRUCTURAL PANELS AND BOTTOM CHORD SHALL HAVE A PROPERLY ATTACHED RIGID CEILING.

IMPORTANTFURNISH A COPY OF THIS DESIGN TO THE INSTALLATION CONTRACTOR. ITW BCG, INC. SHALL NOT BE RESPONSIBLE FOR ANY DEVIATION FROM THIS DESIGN; ANY FAILURE TO BUILD THE TRUSS IN CONFORMANCE WITH TPI; OR FABRICATING, HANDLING, SHIPPING, INSTALLING & BRACING OF TRUSSES.
DESIGN CONFORMS WITH APPLICABLE PROVISIONS OF NDS (NATIONAL DESIGN SPEC. BY AF&PA) AND TPI. ITW BCG CONNECTOR PLATES ARE MADE OF 20/18/16GA (W.H/SS/K) ASTM A653 GRADE 40/60 (W. K/H.SS) GALV. STEEL. APPLY PLATES TO EACH FACE OF TRUSS AND, UNLESS OTHERWISE LOCATED ON THIS DESIGN, POSITION PER DRAWINGS 160A-2. ANY INSPECTION OF PLATES FOLLOWED BY (1) SHALL BE PER ANNEX A3 OF TP11-2002 SEC.3. A SEAL ON THIS DRAWING INDICATES ACCEPTANCE OF PROFESSIONAL ENGINEERING RESPONSIBILITY SOLELY FOR THE TRUSS COMPONENT DESIGN SHOWN. THE SUITABILITY AND USE OF THIS COMPONENT FOR ANY BUILDING IS THE RESPONSIBILITY OF THE BUILDING DESIGNER PER ANSI/TPI 1 SEC. 2.

DOUGLAS FLEMING LICENSE No. 66648 STATE OF FLORIDA PROFESSIONAL ENGINEER
AUG 20 '09

TC LL	20.0 PSF	REF R8228- 19873
TC DL	10.0 PSF	DATE 08/20/09
BC DL	10.0 PSF	DRW HCUSR8228 09232031
BC LL	0.0 PSF	HC-ENG DF/DF
TOT.LD.	40.0 PSF	SEQN- 9384
DUR.FAC.	1.25	FROM AH
SPACING	24.0"	JREF- 1TUD8228Z01

(9-070--Freeman Design Group Hudson -- , ** - H9AA)

Top chord 2x6 SP #2
Bot chord 2x6 SP #2
Webs 2x4 SP #3

Roof overhang supports 2.00 psf soffit load.

In lieu of structural panels use purlins to brace all flat TC @ 24" OC.

WARNING: Furnish a copy of this DWG to the installation contractor. Special care must be taken during handling, shipping and installation of trusses. See "WARNING" note below.

110 mph wind, 15.00 ft mean hgt, ASCE 7-05, PART._ENC. bldg, not located within 6.50 ft from roof edge, CAT II, EXP B, wind TC DL=5.0 psf, wind BC DL=5.0 psf. Iw=1.00 GCpi(+/-)=0.55

Wind reactions based on MWFRS pressures.

Bottom chord checked for 10.00 psf non-concurrent live load.

Deflection meets L/240 live and L/180 total load.

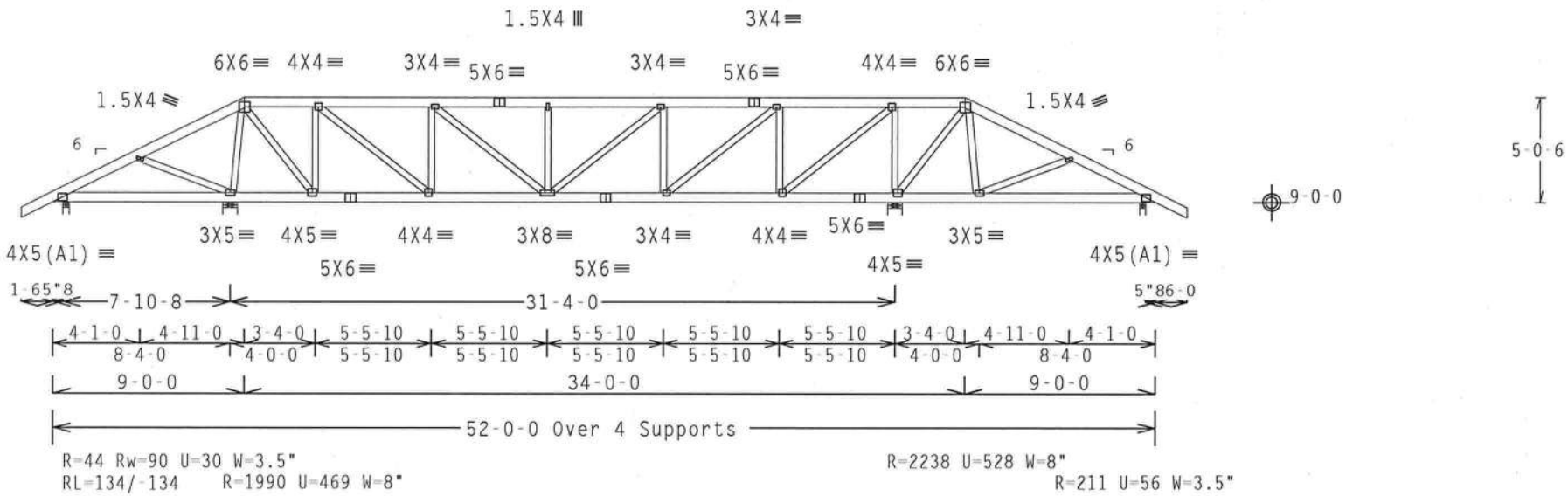

Design Crit: FBC2007Res/TPI-2002(STD)

PLT TYP. Wave FT/RT=10%(0%)/0(0) 8.07.00 QTY:1 FL/-/4/-/-/R/- Scale =.125"/Ft.

ALPINE
ITW Building Components Group Inc.
Haines City, FL 33844
FL C[illegible]78

WARNING TRUSSES REQUIRE EXTREME CARE IN FABRICATION, HANDLING, SHIPPING, INSTALLING AND BRACING. REFER TO BCSI (BUILDING COMPONENT SAFETY INFORMATION), PUBLISHED BY TPI (TRUSS PLATE INSTITUTE, 218 NORTH LEE STREET, SUITE 312, ALEXANDRIA, VA. 22314) AND WTCA (WOOD TRUSS COUNCIL OF AMERICA. 6300 ENTERPRISE LANE, MADISON, WI 53719) FOR SAFETY PRACTICES PRIOR TO PERFORMING THESE FUNCTIONS. UNLESS OTHERWISE INDICATED TOP CHORD SHALL HAVE PROPERLY ATTACHED STRUCTURAL PANELS AND BOTTOM CHORD SHALL HAVE A PROPERLY ATTACHED RIGID CEILING.

IMPORTANT FURNISH A COPY OF THIS DESIGN TO THE INSTALLATION CONTRACTOR. ITW BCG, INC. SHALL NOT BE RESPONSIBLE FOR ANY DEVIATION FROM THIS DESIGN; ANY FAILURE TO BUILD THE TRUSS IN COMFORMANCE WITH TPI; OR FABRICATING, HANDLING, SHIPPING, INSTALLING & BRACING OF TRUSSES.
DESIGN CONFORMS WITH APPLICABLE PROVISIONS OF NDS (NATIONAL DESIGN SPEC. BY AF&PA) AND TPI. ITW BCG CONNECTOR PLATES ARE MADE OF 20/18/16GA (W,H/SS/K) ASTM A653 GRADE 40/60 (W, K/H,SS) GALV. STEEL. APPLY PLATES TO EACH FACE OF TRUSS AND, UNLESS OTHERWISE LOCATED ON THIS DESIGN, POSITION PER DRAWINGS 160A-Z. ANY INSPECTION OF PLATES FOLLOWED BY (1) SHALL BE PER ANNEX A3 OF TPI1-2002 SEC.3. A SEAL ON THIS DRAWING INDICATES ACCEPTANCE OF PROFESSIONAL ENGINEERING RESPONSIBILITY SOLELY FOR THE TRUSS COMPONENT DESIGN SHOWN. THE SUITABILITY AND USE OF THIS COMPONENT FOR ANY BUILDING IS THE RESPONSIBILITY OF THE BUILDING DESIGNER PER ANSI/TPI 1 SEC. 2.

DOUGLAS FLEMING LICENSE No. 66648 STATE OF FLORIDA PROFESSIONAL ENGINEER
[illegible] 20 '09

TC LL	20.0 PSF	REF	R8228- 19874
TC DL	10.0 PSF	DATE	08/20/09
BC DL	10.0 PSF	DRW	HCUSR8228 09232007
BC LL	0.0 PSF	HC-ENG	DF/DF
TOT.LD.	40.0 PSF	SEQN-	9398
DUR.FAC.	1.25	FROM	AH
SPACING	24.0"	JREF-	1TUD8228Z01

Top chord 2x6 SP #2
Bot chord 2x6 SP #2
Webs 2x4 SP #3

Roof overhang supports 2.00 psf soffit load.

(A) 1x4 #3SRB SPF-S or better "T" brace. 80% length of web member. Attach with 8d Box or Gun (0.113"x2.5",min.)nails @ 6" OC.

Bottom chord checked for 10.00 psf non-concurrent live load.

WARNING: Furnish a copy of this DWG to the installation contractor. Special care must be taken during handling, shipping and installation of trusses. See "WARNING" note below.

110 mph wind, 15.00 ft mean hgt, ASCE 7-05, PART._ENC. bldg, not located within 6.50 ft from roof edge, CAT II, EXP B, wind TC DL=5.0 psf, wind BC DL=5.0 psf. Iw=1.00 GCpi(+/-)=0.55

Wind reactions based on MWFRS pressures.

In lieu of structural panels use purlins to brace all flat TC @ 24" OC.

Deflection meets L/240 live and L/180 total load.

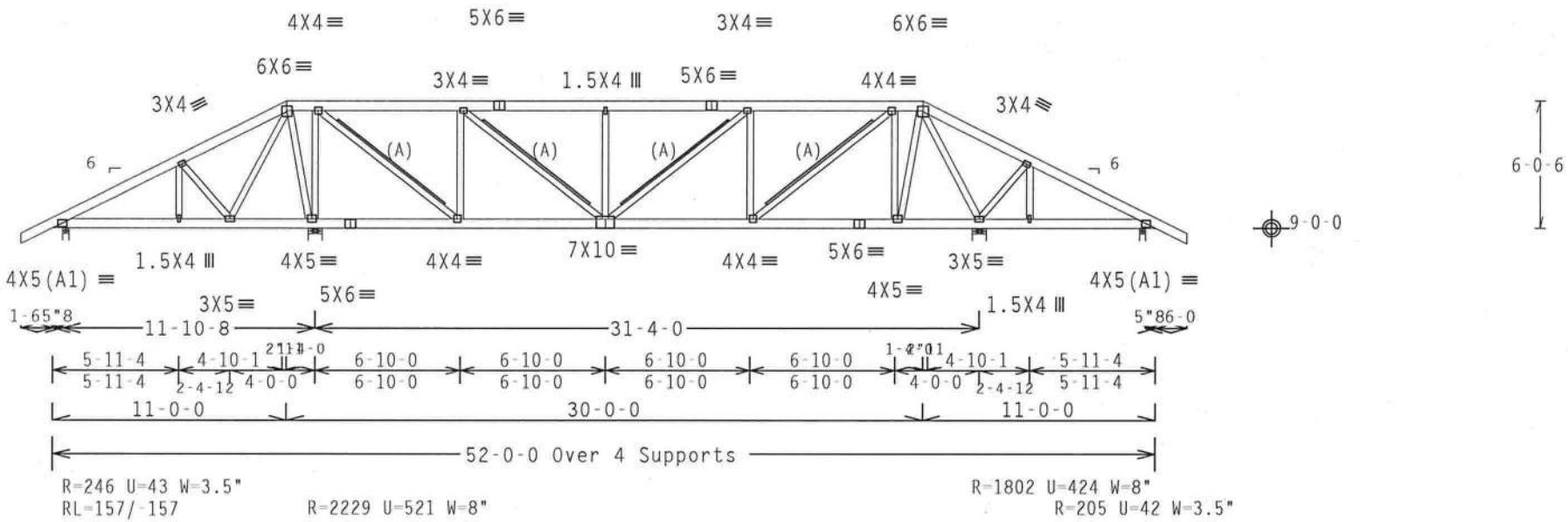

Design Crit: FBC2007Res/TPI-2002(STD)

PLT TYP. Wave | FT/RT=10%(0%)/0(0) | 8.07.00 | QTY:1 | FL/-/4/-/-/R/- | Scale =.125"/Ft.

ALPINE
ITW Building Components Group Inc.
Haines City, FL 33844
FL C

WARNING TRUSSES REQUIRE EXTREME CARE IN FABRICATION, HANDLING, SHIPPING, INSTALLING AND BRACING. REFER TO BCSI (BUILDING COMPONENT SAFETY INFORMATION), PUBLISHED BY TPI (TRUSS PLATE INSTITUTE, 218 NORTH LEE STREET, SUITE 312, ALEXANDRIA, VA. 22314) AND WTCA (WOOD TRUSS COUNCIL OF AMERICA, 6300 ENTERPRISE LANE, MADISON, WI 53719) FOR SAFETY PRACTICES PRIOR TO PERFORMING THESE FUNCTIONS. UNLESS OTHERWISE INDICATED TOP CHORD SHALL HAVE PROPERLY ATTACHED STRUCTURAL PANELS AND BOTTOM CHORD SHALL HAVE A PROPERLY ATTACHED RIGID CEILING.

IMPORTANT FURNISH A COPY OF THIS DESIGN TO THE INSTALLATION CONTRACTOR. ITW BCG, INC. SHALL NOT BE RESPONSIBLE FOR ANY DEVIATION FROM THIS DESIGN; ANY FAILURE TO BUILD THE TRUSS IN CONFORMANCE WITH TPI; OR FABRICATING, HANDLING, SHIPPING, INSTALLING & BRACING OF TRUSSES. DESIGN CONFORMS WITH APPLICABLE PROVISIONS OF NDS (NATIONAL DESIGN SPEC. BY AF&PA) AND TPI. ITW BCG CONNECTOR PLATES ARE MADE OF 20/18/16GA (H,H/SS/K) ASTM A653 GRADE 40/60 (H, K/H,SS) GALV. STEEL. APPLY PLATES TO EACH FACE OF TRUSS AND, UNLESS OTHERWISE LOCATED ON THIS DESIGN, POSITION PER DRAWINGS 160A-Z. ANY INSPECTION OF PLATES FOLLOWED BY (1) SHALL BE PER ANNEX A3 OF TPI1-2002 SEC.3. A SEAL ON THIS DRAWING INDICATES ACCEPTANCE OF PROFESSIONAL ENGINEERING RESPONSIBILITY SOLELY FOR THE TRUSS COMPONENT DESIGN SHOWN. THE SUITABILITY AND USE OF THIS COMPONENT FOR ANY BUILDING IS THE RESPONSIBILITY OF THE BUILDING DESIGNER PER ANSI/TPI 1 SEC. 2.

DOUGLAS FLEMING LICENSE No. 66648 STATE OF FLORIDA PROFESSIONAL ENGINEER

ug 20 '09

TC LL	20.0 PSF	REF R8228- 19875
TC DL	10.0 PSF	DATE 08/20/09
BC DL	10.0 PSF	DRW HCUSR8228 09232041
BC LL	0.0 PSF	HC-ENG DF/DF
TOT.LD.	40.0 PSF	SEQN- 9405
DUR.FAC.	1.25	FROM AH
SPACING	24.0"	JREF- 1TUD8228Z01

(9-070--Freeman Design Group Hudson -- , ** - H11AA)

Top chord 2x6 SP #2
Bot chord 2x6 SP #2
Webs 2x4 SP #3

Roof overhang supports 2.00 psf soffit load.

(A) 1x4 #3SRB SPF-S or better "T" brace. 80% length of web member. Attach with 8d Box or Gun (0.113"x2.5",min.)nails @ 6" OC.

Bottom chord checked for 10.00 psf non-concurrent live load.

WARNING: Furnish a copy of this DWG to the installation contractor. Special care must be taken during handling, shipping and installation of trusses. See "WARNING" note below.

110 mph wind, 15.00 ft mean hgt, ASCE 7-05, PART._ENC. bldg, not located within 6.50 ft from roof edge, CAT II, EXP B, wind TC DL=5.0 psf, wind BC DL=5.0 psf. Iw=1.00 GCpi(+/-)=0.55

Wind reactions based on MWFRS pressures.

In lieu of structural panels use purlins to brace all flat TC @ 24" OC.

Deflection meets L/240 live and L/180 total load.

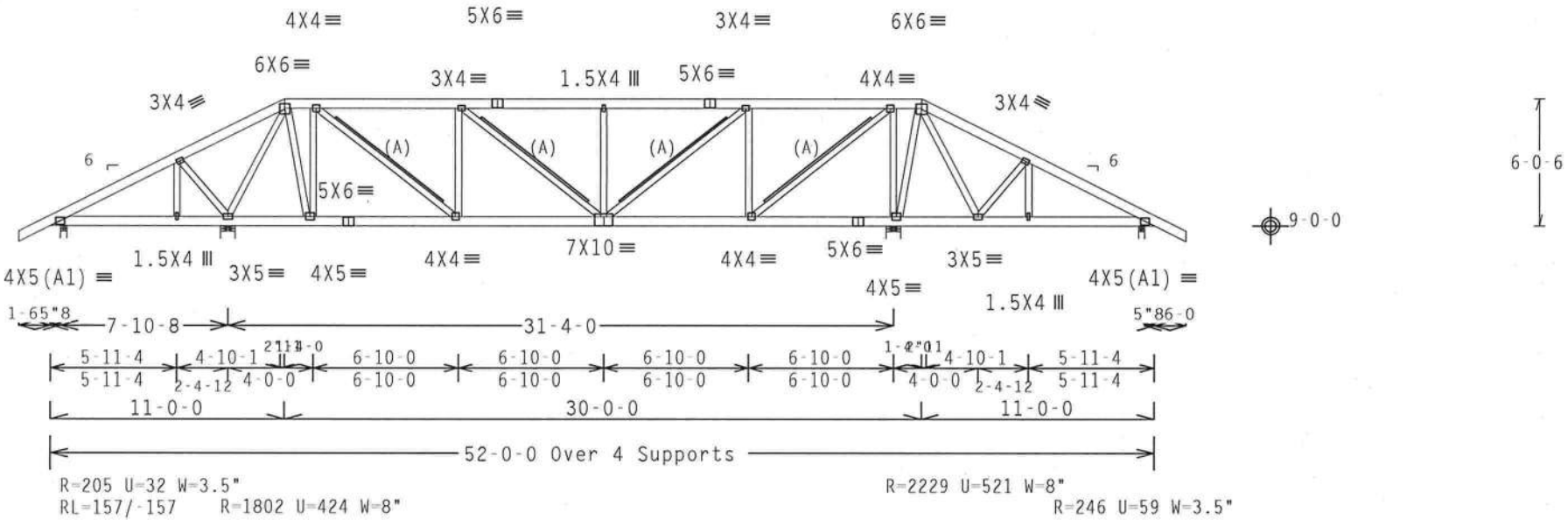

Design Crit: FBC2007Res/TPI-2002(STD)

PLT TYP. Wave | FT/RT=10%(0%)/0(0) | 8.07.00 | QTY:1 | FL/-/4/-/-/R/- | Scale =.125"/Ft.

ALPINE
ITW Building Components Group Inc.
Haines City, FL 33844
FL Co. #0278

WARNING TRUSSES REQUIRE EXTREME CARE IN FABRICATION, HANDLING, SHIPPING, INSTALLING AND BRACING. REFER TO BCSI (BUILDING COMPONENT SAFETY INFORMATION), PUBLISHED BY TPI (TRUSS PLATE INSTITUTE, 218 NORTH LEE STREET, SUITE 312, ALEXANDRIA, VA. 22314) AND WTCA (WOOD TRUSS COUNCIL OF AMERICA, 6300 ENTERPRISE LANE, MADISON, WI 53719) FOR SAFETY PRACTICES PRIOR TO PERFORMING THESE FUNCTIONS. UNLESS OTHERWISE INDICATED TOP CHORD SHALL HAVE PROPERLY ATTACHED STRUCTURAL PANELS AND BOTTOM CHORD SHALL HAVE A PROPERLY ATTACHED RIGID CEILING.

IMPORTANT FURNISH A COPY OF THIS DESIGN TO THE INSTALLATION CONTRACTOR. ITW BCG, INC. SHALL NOT BE RESPONSIBLE FOR ANY DEVIATION FROM THIS DESIGN; ANY FAILURE TO BUILD THE TRUSS IN CONFORMANCE WITH TPI; OR FABRICATING, HANDLING, SHIPPING, INSTALLING & BRACING OF TRUSSES. DESIGN CONFORMS WITH APPLICABLE PROVISIONS OF NDS (NATIONAL DESIGN SPEC. BY AF&PA) AND TPI. [ITW BCG CONNECTOR PLATES ARE MADE OF 20/18/16GA (W,H/SS/K) ASTM A653 GRADE 40/60 (W, K/H,SS) GALV. STEEL. APPLY PLATES TO EACH FACE OF TRUSS AND, UNLESS OTHERWISE LOCATED ON THIS DESIGN, POSITION PER DRAWINGS 160A-Z. ANY INSPECTION OF PLATES FOLLOWED BY (1) SHALL BE PER ANNEX A3 OF TPI1-2002 SEC.3. A SEAL ON THIS DRAWING INDICATES ACCEPTANCE OF PROFESSIONAL ENGINEERING RESPONSIBILITY SOLELY FOR THE TRUSS COMPONENT DESIGN SHOWN. THE SUITABILITY AND USE OF THIS COMPONENT FOR ANY BUILDING IS THE RESPONSIBILITY OF THE BUILDING DESIGNER PER ANSI/TPI 1 SEC. 2.

DOUGLAS FLEMING LICENSE No. 66648 STATE OF FLORIDA PROFESSIONAL ENGINEER

TC LL	20.0 PSF	REF R8228- 19876
TC DL	10.0 PSF	DATE 08/20/09
BC DL	10.0 PSF	DRW HCUSR8228 09232008
BC LL	0.0 PSF	HC-ENG DF/DF
TOT.LD.	40.0 PSF	SEQN- 9410
DUR.FAC.	1.25	FROM AH
SPACING	24.0"	JREF- 1TUD8228Z01

9 20 '09

(9-070--Freeman Design Group Hudson -- , ** - H13AA)

Top chord 2x6 SP #2
Bot chord 2x6 SP #2
Webs 2x4 SP #3

Roof overhang supports 2.00 psf soffit load.

(A) 1x4 #3SRB SPF-S or better "T" brace. 80% length of web member. Attach with 8d Box or Gun (0.113"x2.5",min.)nails @ 6" OC.

Bottom chord checked for 10.00 psf non-concurrent live load.

WARNING: Furnish a copy of this DWG to the installation contractor. Special care must be taken during handling, shipping and installation of trusses. See "WARNING" note below.

110 mph wind, 15.00 ft mean hgt, ASCE 7-05, PART. ENC. bldg, not located within 6.50 ft from roof edge, CAT II, EXP B, wind TC DL=5.0 psf, wind BC DL=5.0 psf. Iw=1.00 GCpi(+/-)=0.55

Wind reactions based on MWFRS pressures.

In lieu of structural panels use purlins to brace all flat TC @ 24" OC.

Deflection meets L/240 live and L/180 total load.

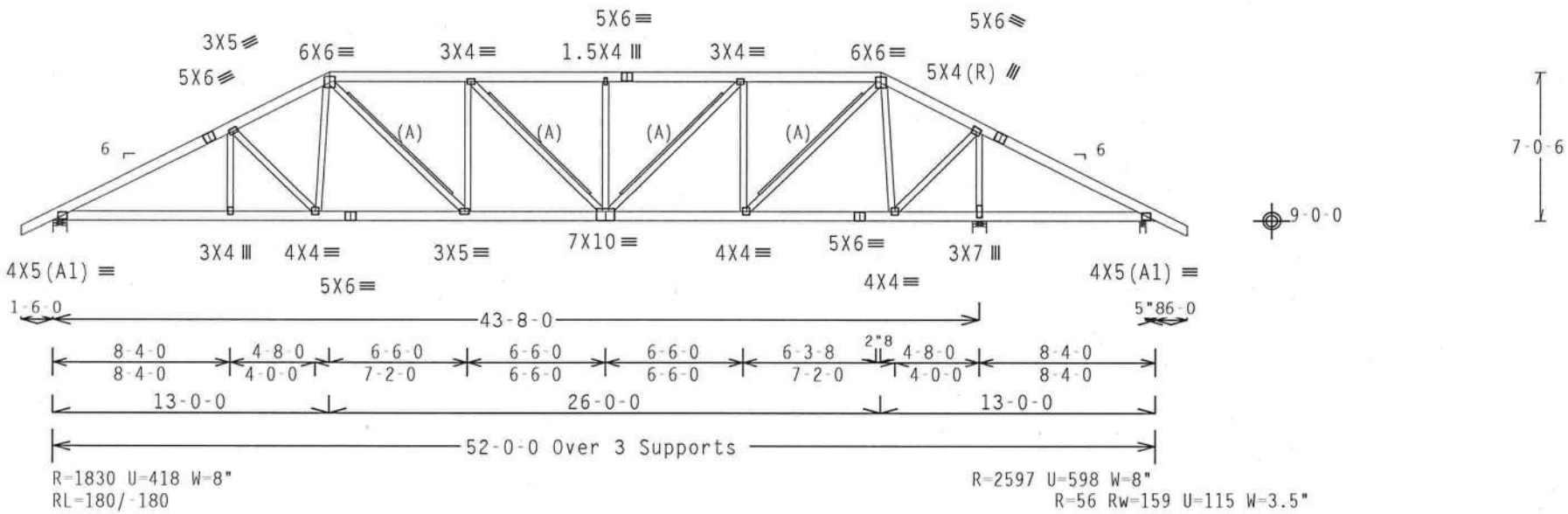

Design Crit: FBC2007Res/TPI-2002(STD)

PLT TYP. Wave | FT/RT=10%(0%)/0(0) | 8.07.00 | QTY:1 | FL/-/4/-/-/R/- | Scale =.125"/Ft.

ALPINE
ITW Building Components Group Inc.
Haines City, FL 33844
FL COA #0278

WARNING TRUSSES REQUIRE EXTREME CARE IN FABRICATION, HANDLING, SHIPPING, INSTALLING AND BRACING. REFER TO BCSI (BUILDING COMPONENT SAFETY INFORMATION), PUBLISHED BY TPI (TRUSS PLATE INSTITUTE, 218 NORTH LEE STREET, SUITE 312, ALEXANDRIA, VA. 22314) AND WTCA (WOOD TRUSS COUNCIL OF AMERICA, 6300 ENTERPRISE LANE, MADISON, WI 53719) FOR SAFETY PRACTICES PRIOR TO PERFORMING THESE FUNCTIONS. UNLESS OTHERWISE INDICATED TOP CHORD SHALL HAVE PROPERLY ATTACHED STRUCTURAL PANELS AND BOTTOM CHORD SHALL HAVE A PROPERLY ATTACHED RIGID CEILING.

IMPORTANT FURNISH A COPY OF THIS DESIGN TO THE INSTALLATION CONTRACTOR. ITW BCG, INC. SHALL NOT BE RESPONSIBLE FOR ANY DEVIATION FROM THIS DESIGN; ANY FAILURE TO BUILD THE TRUSS IN CONFORMANCE WITH TPI; OR FABRICATING, HANDLING, SHIPPING, INSTALLING & BRACING OF TRUSSES. DESIGN CONFORMS WITH APPLICABLE PROVISIONS OF NDS (NATIONAL DESIGN SPEC. BY AF&PA) AND TPI. ITW BCG CONNECTOR PLATES ARE MADE OF 20/18/16GA (W,H/SS/K) ASTM A653 GRADE 40/60 (W, K/H,SS) GALV. STEEL. APPLY PLATES TO EACH FACE OF TRUSS AND, UNLESS OTHERWISE LOCATED ON THIS DESIGN, POSITION PER DRAWINGS 160A-Z. ANY INSPECTION OF PLATES FOLLOWED BY (1) SHALL BE PER ANNEX A3 OF TPI1-2002 SEC.3. A SEAL ON THIS DRAWING INDICATES ACCEPTANCE OF PROFESSIONAL ENGINEERING RESPONSIBILITY SOLELY FOR THE TRUSS COMPONENT DESIGN SHOWN. THE SUITABILITY AND USE OF THIS COMPONENT FOR ANY BUILDING IS THE RESPONSIBILITY OF THE BUILDING DESIGNER PER ANSI/TPI 1 SEC. 2.

DOUGLAS FLEMING LICENSE No. 66648 STATE OF FLORIDA PROFESSIONAL ENGINEER
08/20 '09

TC LL	20.0 PSF	REF	R8228- 19877
TC DL	10.0 PSF	DATE	08/20/09
BC DL	10.0 PSF	DRW	HCUSR8228 09232009
BC LL	0.0 PSF	HC-ENG	DF/DF
TOT.LD.	40.0 PSF	SEQN-	9426
DUR.FAC.	1.25	FROM	AH
SPACING	24.0"	JREF-	1TUD8228Z01

(9-070--Freeman Design Group Hudson -- , ** - H15AA)

Top chord 2x6 SP #2
Bot chord 2x6 SP #2
Webs 2x4 SP #3

Roof overhang supports 2.00 psf soffit load.

(B) 1x4 #3SRB SPF-S or better "T" brace. 80% length of web member. Attach with 8d Box or Gun (0.113"x2.5",min.)nails @ 6" OC.

In lieu of structural panels use purlins to brace all flat TC @ 24" OC.

WARNING: Furnish a copy of this DWG to the installation contractor. Special care must be taken during handling, shipping and installation of trusses. See "WARNING" note below.

110 mph wind, 15.00 ft mean hgt, ASCE 7-05, PART._ENC. bldg, not located within 6.50 ft from roof edge, CAT II, EXP B, wind TC DL=5.0 psf, wind BC DL=5.0 psf. Iw=1.00 GCpi(+/-)=0.55

Wind reactions based on MWFRS pressures.

(A) 2x4 #3 or better "T" brace. 80% length of web member. Attach with 16d Box or Gun (0.135"x3.5",min.)nails @ 6" OC.

Bottom chord checked for 10.00 psf non-concurrent live load.

Deflection meets L/240 live and L/180 total load.

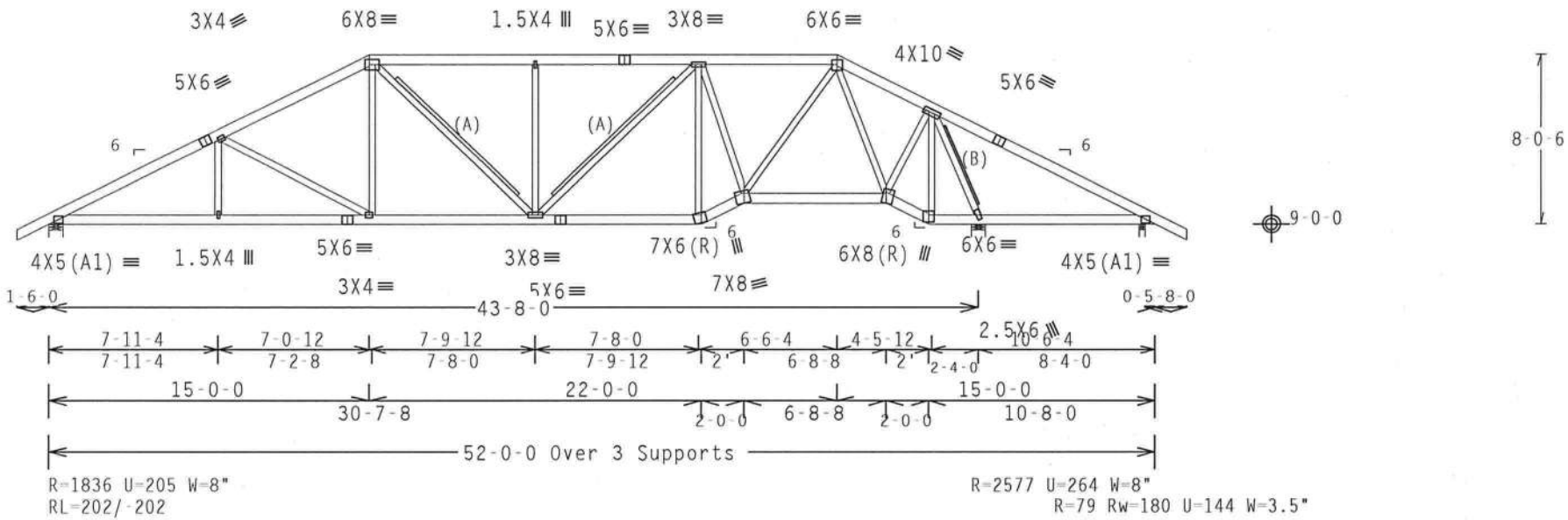

Design Crit: FBC2007Res/TPI-2002(STD)

PLT TYP. Wave | FT/RT=10%(0%)/0(0) | 8.07.00.1 | QTY:1 | FL/-/4/-/-/R/- | Scale =.125"/Ft.

ALPINE
ITW Building Components Group Inc.
Haines City, FL 33844
FL C[illegible]278

WARNING TRUSSES REQUIRE EXTREME CARE IN FABRICATION, HANDLING, SHIPPING, INSTALLING AND BRACING. REFER TO BCSI (BUILDING COMPONENT SAFETY INFORMATION), PUBLISHED BY TPI (TRUSS PLATE INSTITUTE, 218 NORTH LEE STREET, SUITE 312, ALEXANDRIA, VA, 22314) AND WTCA (WOOD TRUSS COUNCIL OF AMERICA, 6300 ENTERPRISE LANE, MADISON, WI 53719) FOR SAFETY PRACTICES PRIOR TO PERFORMING THESE FUNCTIONS. UNLESS OTHERWISE INDICATED TOP CHORD SHALL HAVE PROPERLY ATTACHED STRUCTURAL PANELS AND BOTTOM CHORD SHALL HAVE A PROPERLY ATTACHED RIGID CEILING.

IMPORTANTFURNISH A COPY OF THIS DESIGN TO THE INSTALLATION CONTRACTOR. ITW BCG, INC. SHALL NOT BE RESPONSIBLE FOR ANY DEVIATION FROM THIS DESIGN; ANY FAILURE TO BUILD THE TRUSS IN COMFORMANCE WITH TPI; OR FABRICATING, HANDLING, SHIPPING, INSTALLING & BRACING OF TRUSSES.
DESIGN CONFORMS WITH APPLICABLE PROVISIONS OF NDS (NATIONAL DESIGN SPEC, BY AF&PA) AND TPI. ITW BCG CONNECTOR PLATES ARE MADE OF 20/18/16GA (W,H/SS/K) ASTM A653 GRADE 40/60 (W, K/H,SS) GALV. STEEL. APPLY PLATES TO EACH FACE OF TRUSS AND, UNLESS OTHERWISE LOCATED ON THIS DESIGN, POSITION PER DRAWINGS 160A-Z. ANY INSPECTION OF PLATES FOLLOWED BY (1) SHALL BE PER ANNEX A3 OF TPI1-2002 SEC.3. A SEAL ON THIS DRAWING INDICATES ACCEPTANCE OF PROFESSIONAL ENGINEERING RESPONSIBILITY SOLELY FOR THE TRUSS COMPONENT DESIGN SHOWN. THE SUITABILITY AND USE OF THIS COMPONENT FOR ANY BUILDING IS THE RESPONSIBILITY OF THE BUILDING DESIGNER PER ANSI/TPI 1 SEC. 2.

DOUGLAS FLEMING LICENSE No. 66648 STATE OF FLORIDA PROFESSIONAL ENGINEER
[illegible]20 '09

TC LL	20.0 PSF	REF	R8228- 19878
TC DL	10.0 PSF	DATE	08/20/09
BC DL	10.0 PSF	DRW	HCUSR8228 09232010
BC LL	0.0 PSF	HC-ENG	DF/DF
TOT.LD.	40.0 PSF	SEQN-	9447
DUR.FAC.	1.25	FROM	AH
SPACING	24.0"	JREF-	1TUD8228Z01

(9-070--Freeman Design Group Hudson -- , ** - H17AA)

Top chord 2x6 SP #2
Bot chord 2x6 SP #2
Webs 2x4 SP #3

Roof overhang supports 2.00 psf soffit load.

(A) 1x4 #3SRB SPF-S or better "T" brace. 80% length of web member. Attach with 8d Box or Gun (0.113"x2.5",min.)nails @ 6" OC.

In lieu of structural panels use purlins to brace all flat TC @ 24" OC.

WARNING: Furnish a copy of this DWG to the installation contractor. Special care must be taken during handling, shipping and installation of trusses. See "WARNING" note below.

110 mph wind, 15.00 ft mean hgt, ASCE 7-05, PART._ENC. bldg, not located within 6.50 ft from roof edge, CAT II, EXP B, wind TC DL=5.0 psf, wind BC DL=5.0 psf. Iw=1.00 GCpi(+/-)=0.55

Wind reactions based on MWFRS pressures.

(B) 2x6 #3 or better "T" brace. 80% length of web member. Attach with 16d Box or Gun (0.135"x3.5",min.)nails @ 6" OC.

Bottom chord checked for 10.00 psf non-concurrent live load.

Deflection meets L/240 live and L/180 total load.

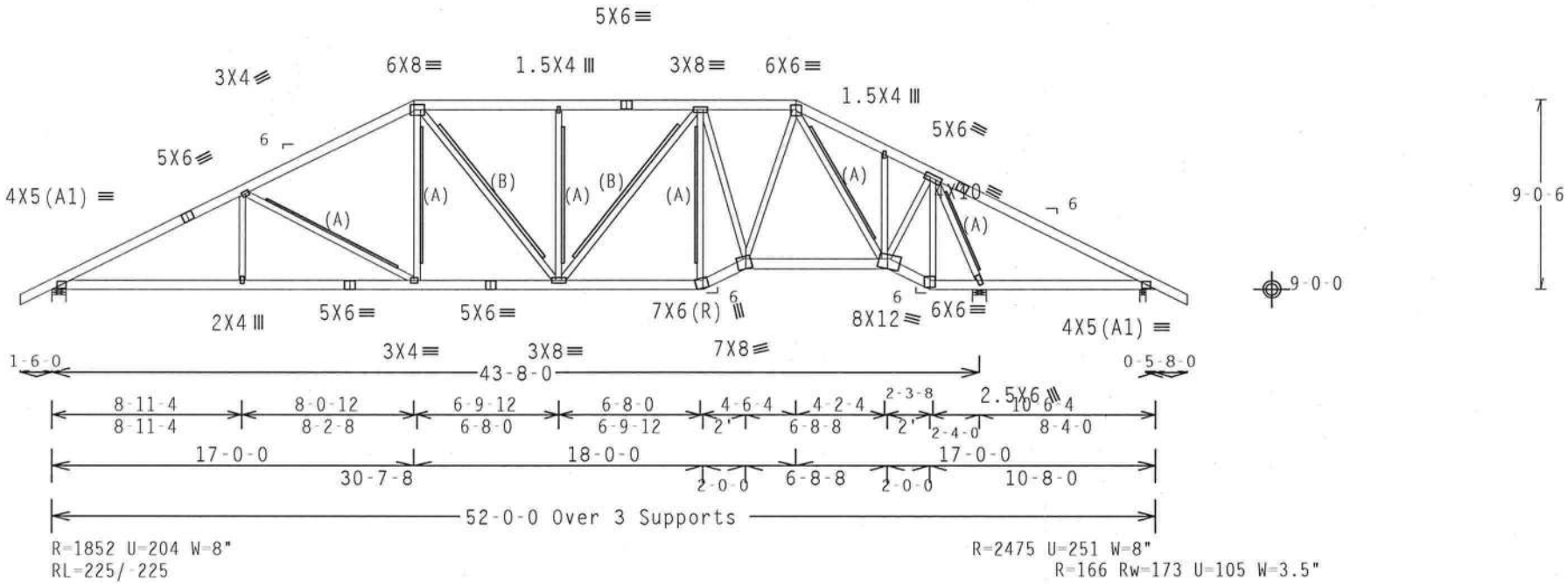

Design Crit: FBC2007Res/TPI-2002(STD)

PLT TYP. Wave | FT/RT=10%(0%)/0(0) | 8.07.00 | QTY:1 | FL/-/4/-/-/R/- | Scale =.125"/Ft.

ALPINE
ITW Building Components Group Inc.
Haines City, FL 33844
FL COA #0278

WARNING TRUSSES REQUIRE EXTREME CARE IN FABRICATION, HANDLING, SHIPPING, INSTALLING AND BRACING. REFER TO BCSI (BUILDING COMPONENT SAFETY INFORMATION), PUBLISHED BY TPI (TRUSS PLATE INSTITUTE, 218 NORTH LEE STREET, SUITE 312, ALEXANDRIA, VA, 22314) AND WTCA (WOOD TRUSS COUNCIL OF AMERICA, 6300 ENTERPRISE LANE, MADISON, WI 53719) FOR SAFETY PRACTICES PRIOR TO PERFORMING THESE FUNCTIONS. UNLESS OTHERWISE INDICATED TOP CHORD SHALL HAVE PROPERLY ATTACHED STRUCTURAL PANELS AND BOTTOM CHORD SHALL HAVE A PROPERLY ATTACHED RIGID CEILING.

IMPORTANTFURNISH A COPY OF THIS DESIGN TO THE INSTALLATION CONTRACTOR. ITW BCG, INC. SHALL NOT BE RESPONSIBLE FOR ANY DEVIATION FROM THIS DESIGN; ANY FAILURE TO BUILD THE TRUSS IN CONFORMANCE WITH TPI; OR FABRICATING, HANDLING, SHIPPING, INSTALLING & BRACING OF TRUSSES.
DESIGN CONFORMS WITH APPLICABLE PROVISIONS OF NDS (NATIONAL DESIGN SPEC. BY AF&PA) AND TPI. ITW BCG CONNECTOR PLATES ARE MADE OF 20/18/16GA (W,H/SS/K) ASTM A653 GRADE 40/60 (W, K/H,SS) GALV. STEEL. APPLY PLATES TO EACH FACE OF TRUSS AND. UNLESS OTHERWISE LOCATED ON THIS DESIGN, POSITION PER DRAWINGS 160A-Z. ANY INSPECTION OF PLATES FOLLOWED BY (1) SHALL BE PER ANNEX A3 OF TPII-2002 SEC.3. A SEAL ON THIS DRAWING INDICATES ACCEPTANCE OF PROFESSIONAL ENGINEERING RESPONSIBILITY SOLELY FOR THE TRUSS COMPONENT DESIGN SHOWN. THE SUITABILITY AND USE OF THIS COMPONENT FOR ANY BUILDING IS THE RESPONSIBILITY OF THE BUILDING DESIGNER PER ANSI/TPI 1 SEC. 2.

DOUGLAS FLEMING LICENSE No 66648 STATE OF FLORIDA PROFESSIONAL ENGINEER
20 '09

TC LL	20.0 PSF	REF R8228- 19879
TC DL	10.0 PSF	DATE 08/20/09
BC DL	10.0 PSF	DRW HCUSR8228 09232011
BC LL	0.0 PSF	HC-ENG DF/DF
TOT.LD.	40.0 PSF	SEQN- 9459
DUR.FAC.	1.25	FROM AH
SPACING	24.0"	JREF- 1TUD8228Z01

(9-070--Freeman Design Group Hudson -- , ** - H19A)

Top chord 2x6 SP #2
Bot chord 2x6 SP #2
Webs 2x4 SP #3

Roof overhang supports 2.00 psf soffit load.

(A) 1x4 #3SRB SPF-S or better "T" brace. 80% length of web member. Attach with 8d Box or Gun (0.113"x2.5",min.)nails @ 6" OC.

In lieu of structural panels use purlins to brace all flat TC @ 24" OC.

WARNING: Furnish a copy of this DWG to the installation contractor. Special care must be taken during handling, shipping and installation of trusses. See "WARNING" note below.

110 mph wind, 15.00 ft mean hgt, ASCE 7-05, PART._ENC. bldg, not located within 6.50 ft from roof edge, CAT II, EXP B, wind TC DL=5.0 psf, wind BC DL=5.0 psf. Iw=1.00 GCpi(+/-)=0.55

Wind reactions based on MWFRS pressures.

(B) 2x6 #3 or better "T" brace. 80% length of web member. Attach with 16d Box or Gun (0.135"x3.5",min.)nails @ 6" OC.

Bottom chord checked for 10.00 psf non-concurrent live load.

Deflection meets L/240 live and L/180 total load.

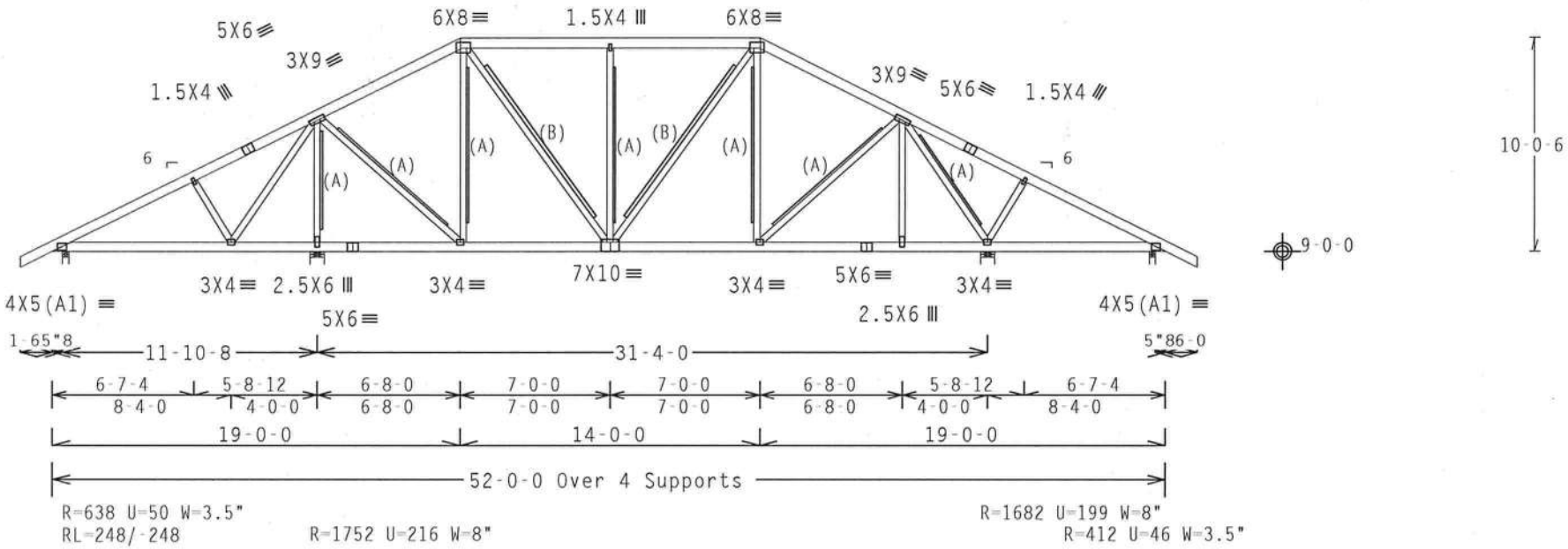

Design Crit: FBC2007Res/TPI-2002(STD)

PLT TYP. Wave FT/RT=10%(0%)/0(0) 8.07.00 QTY:1 FL/-/4/-/-/R/- Scale =.125"/Ft.

ALPINE
ITW Building Components Group Inc.
Haines City, FL 33844
FL C[illegible]278

WARNING TRUSSES REQUIRE EXTREME CARE IN FABRICATION, HANDLING, SHIPPING, INSTALLING AND BRACING. REFER TO BCSI (BUILDING COMPONENT SAFETY INFORMATION), PUBLISHED BY TPI (TRUSS PLATE INSTITUTE, 218 NORTH LEE STREET, SUITE 312, ALEXANDRIA, VA, 22314) AND WTCA (WOOD TRUSS COUNCIL OF AMERICA, 6300 ENTERPRISE LANE, MADISON, WI 53719) FOR SAFETY PRACTICES PRIOR TO PERFORMING THESE FUNCTIONS. UNLESS OTHERWISE INDICATED TOP CHORD SHALL HAVE PROPERLY ATTACHED STRUCTURAL PANELS AND BOTTOM CHORD SHALL HAVE A PROPERLY ATTACHED RIGID CEILING.

IMPORTANTFURNISH A COPY OF THIS DESIGN TO THE INSTALLATION CONTRACTOR. ITW BCG, INC. SHALL NOT BE RESPONSIBLE FOR ANY DEVIATION FROM THIS DESIGN; ANY FAILURE TO BUILD THE TRUSS IN CONFORMANCE WITH TPI; OR FABRICATING, HANDLING, SHIPPING, INSTALLING & BRACING OF TRUSSES. DESIGN CONFORMS WITH APPLICABLE PROVISIONS OF NDS (NATIONAL DESIGN SPEC. BY AF&PA) AND TPI. ITW BCG CONNECTOR PLATES ARE MADE OF 20/18/16GA (W,H/SS/K) ASTM A653 GRADE 40/60 (W, K/H,SS) GALV. STEEL. APPLY PLATES TO EACH FACE OF TRUSS AND, UNLESS OTHERWISE LOCATED ON THIS DESIGN, POSITION PER DRAWINGS 160A-Z. ANY INSPECTION OF PLATES FOLLOWED BY (I) SHALL BE PER ANNEX A3 OF TPI1-2002 SEC.3. A SEAL ON THIS DRAWING INDICATES ACCEPTANCE OF PROFESSIONAL ENGINEERING RESPONSIBILITY SOLELY FOR THE TRUSS COMPONENT DESIGN SHOWN. THE SUITABILITY AND USE OF THIS COMPONENT FOR ANY BUILDING IS THE RESPONSIBILITY OF THE BUILDING DESIGNER PER ANSI/TPI 1 SEC. 2.

DOUGLAS FLEMING LICENSE No. 66648 STATE OF FLORIDA PROFESSIONAL ENGINEER [illegible] 20 '09

TC LL	20.0 PSF	REF R8228- 19880
TC DL	10.0 PSF	DATE 08/20/09
BC DL	10.0 PSF	DRW HCUSR8228 09232050
BC LL	0.0 PSF	HC-ENG DF/DF
TOT.LD.	40.0 PSF	SEQN- 9466
DUR.FAC.	1.25	FROM AH
SPACING	24.0"	JREF- 1TUD8228Z01

Top chord 2x6 SP #2
Bot chord 2x6 SP #2
Webs 2x4 SP #3

Roof overhang supports 2.00 psf soffit load.

(A) 1x4 #3SRB SPF-S or better "T" brace. 80% length of web member. Attach with 8d Box or Gun (0.113"x2.5",min.)nails @ 6" OC.

In lieu of structural panels use purlins to brace all flat TC @ 24" OC.

WARNING: Furnish a copy of this DWG to the installation contractor. Special care must be taken during handling, shipping and installation of trusses. See "WARNING" note below.

110 mph wind, 15.00 ft mean hgt, ASCE 7-05, PART._ENC. bldg, not located within 6.50 ft from roof edge, CAT II, EXP B, wind TC DL=5.0 psf, wind BC DL=5.0 psf. Iw=1.00 GCpi(+/-)=0.55

Wind reactions based on MWFRS pressures.

(B) 2x6 #3 or better "T" brace. 80% length of web member. Attach with 16d Box or Gun (0.135"x3.5",min.)nails @ 6" OC.

Bottom chord checked for 10.00 psf non-concurrent live load.

Deflection meets L/240 live and L/180 total load.

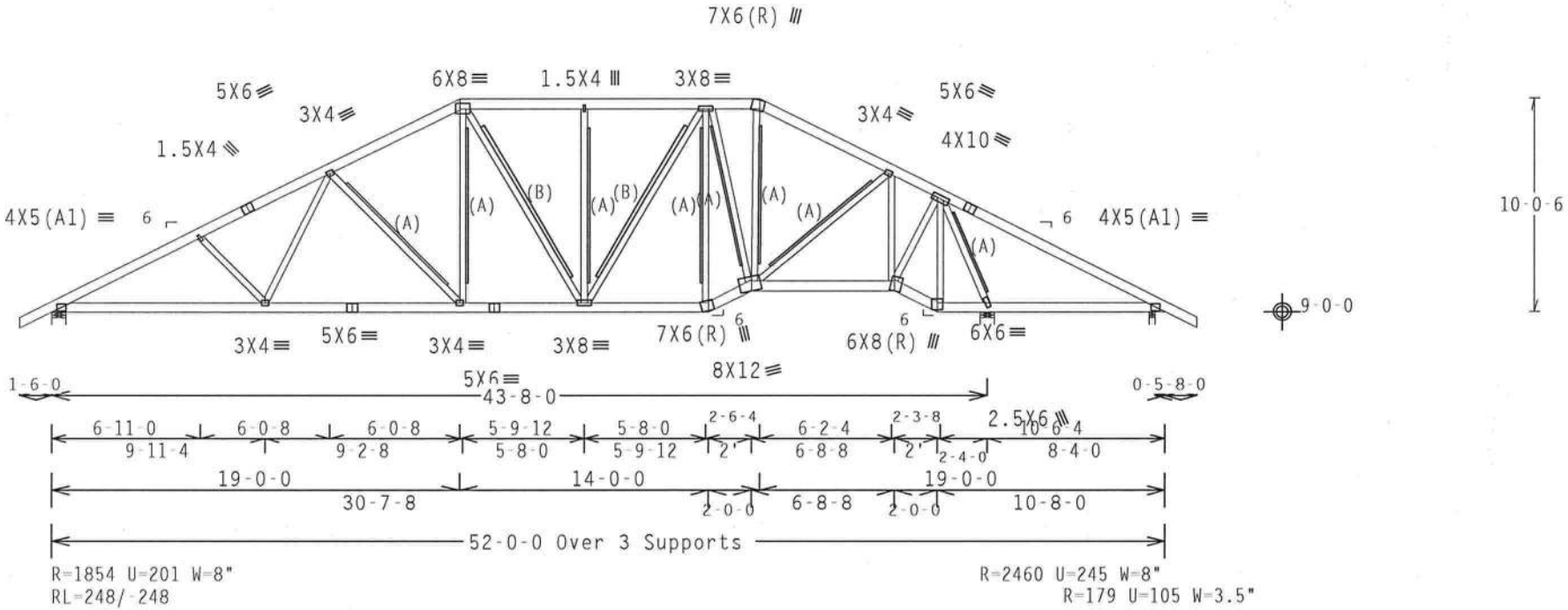

Design Crit: FBC2007Res/TPI-2002(STD)

PLT TYP. Wave | FT/RT=10%(0%)/0(0) | 8.07.00 | QTY:1 | FL/-/4/-/-/R/- | Scale =.125"/Ft.

ALPINE
ITW Building Components Group Inc.
Haines City, FL 33844
FL C[illegible]78

WARNING TRUSSES REQUIRE EXTREME CARE IN FABRICATION, HANDLING, SHIPPING, INSTALLING AND BRACING. REFER TO BCSI (BUILDING COMPONENT SAFETY INFORMATION), PUBLISHED BY TPI (TRUSS PLATE INSTITUTE, 218 NORTH LEE STREET, SUITE 312, ALEXANDRIA, VA, 22314) AND WTCA (WOOD TRUSS COUNCIL OF AMERICA, 6300 ENTERPRISE LANE, MADISON, WI 53719) FOR SAFETY PRACTICES PRIOR TO PERFORMING THESE FUNCTIONS. UNLESS OTHERWISE INDICATED TOP CHORD SHALL HAVE PROPERLY ATTACHED STRUCTURAL PANELS AND BOTTOM CHORD SHALL HAVE A PROPERLY ATTACHED RIGID CEILING.

IMPORTANT FURNISH A COPY OF THIS DESIGN TO THE INSTALLATION CONTRACTOR. ITW BCG, INC. SHALL NOT BE RESPONSIBLE FOR ANY DEVIATION FROM THIS DESIGN; ANY FAILURE TO BUILD THE TRUSS IN CONFORMANCE WITH TPI; OR FABRICATING, HANDLING, SHIPPING, INSTALLING & BRACING OF TRUSSES.
DESIGN CONFORMS WITH APPLICABLE PROVISIONS OF NDS (NATIONAL DESIGN SPEC. BY AF&PA) AND TPI. ITW BCG CONNECTOR PLATES ARE MADE OF 20/18/16GA (W,H/SS/K) ASTM A653 GRADE 40/60 (W, K/H,SS) GALV. STEEL. APPLY PLATES TO EACH FACE OF TRUSS AND, UNLESS OTHERWISE LOCATED ON THIS DESIGN, POSITION PER DRAWINGS 160A-Z. ANY INSPECTION OF PLATES FOLLOWED BY (1) SHALL BE PER ANNEX A3 OF TPI1-2002 SEC.3. A SEAL ON THIS DRAWING INDICATES ACCEPTANCE OF PROFESSIONAL ENGINEERING RESPONSIBILITY SOLELY FOR THE TRUSS COMPONENT DESIGN SHOWN. THE SUITABILITY AND USE OF THIS COMPONENT FOR ANY BUILDING IS THE RESPONSIBILITY OF THE BUILDING DESIGNER PER ANSI/TPI 1 SEC. 2.

DOUGLAS FLEMING LICENSE No. 66648 STATE OF FLORIDA PROFESSIONAL ENGINEER
[illegible]9 20 '09

TC LL	20.0 PSF	REF	R8228- 19881
TC DL	10.0 PSF	DATE	08/20/09
BC DL	10.0 PSF	DRW	HCUSR8228 09232013
BC LL	0.0 PSF	HC-ENG	DF/DF
TOT.LD.	40.0 PSF	SEQN-	9476
DUR.FAC.	1.25	FROM	AH
SPACING	24.0"	JREF-	1TUD8228Z01

(9-070--Freeman Design Group Hudson -- , ** - H21A)

Top chord 2x6 SP #2
Bot chord 2x6 SP #2
Webs 2x4 SP #3

Roof overhang supports 2.00 psf soffit load.

(A) Continuous lateral bracing equally spaced on member.

Truss passed check for 20 psf additional bottom chord live load in areas with 42"-high x 24"-wide clearance.

Deflection meets L/240 live and L/180 total load.

110 mph wind, 15.00 ft mean hgt, ASCE 7-05, PART._ENC. bldg, not located within 6.50 ft from roof edge, CAT II, EXP B, wind TC DL=5.0 psf, wind BC DL=5.0 psf. Iw=1.00 GCpi(+/-)=0.55

Wind reactions based on MWFRS pressures.

In lieu of structural panels use purlins to brace all flat TC @ 24" OC.

Bottom chord checked for 10.00 psf non-concurrent live load.

WARNING: Furnish a copy of this DWG to the installation contractor. Special care must be taken during handling, shipping and installation of trusses. See "WARNING" note below.

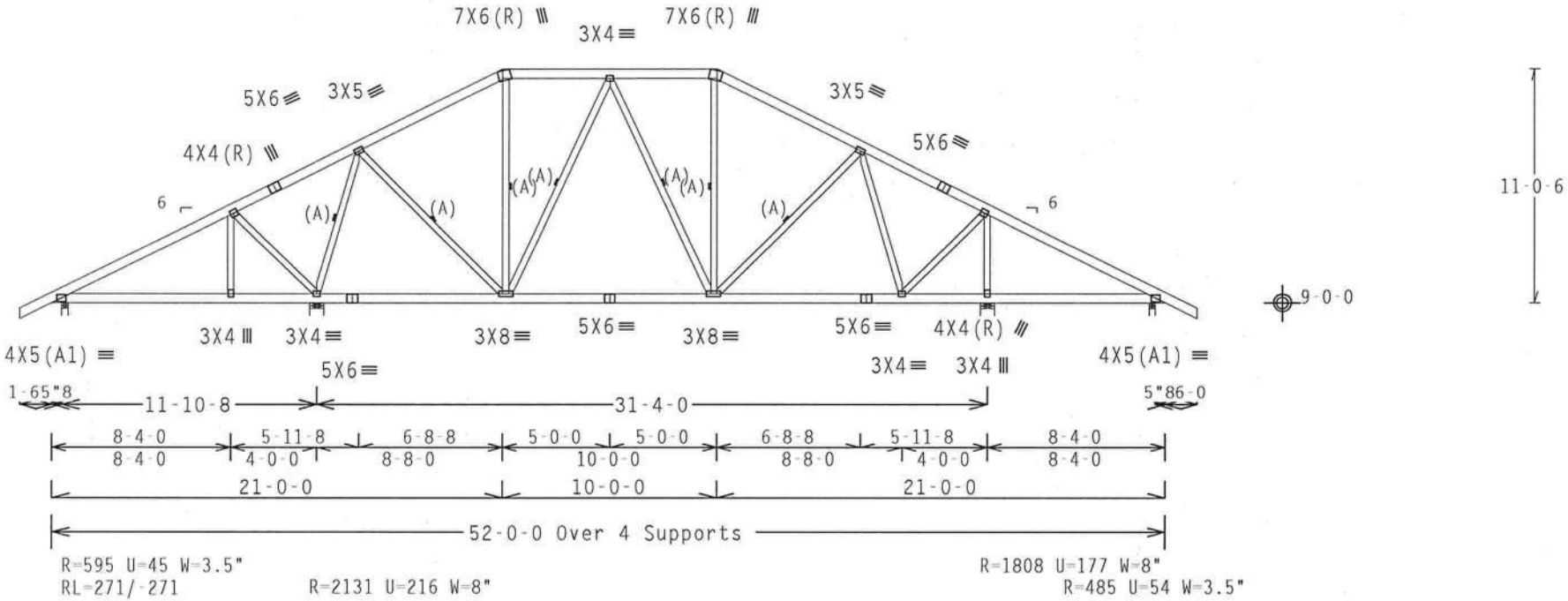

Design Crit: FBC2007Res/TPI-2002(STD)

PLT TYP. Wave | FT/RT=10%(0%)/0(0) | 8.07.00.1 | QTY:6 | FL/-/4/-/-/R/- | Scale =.125"/Ft.

ALPINE
ITW Building Components Group Inc.
Haines City, FL 33844
FL Co[illegible]278

WARNING TRUSSES REQUIRE EXTREME CARE IN FABRICATION, HANDLING, SHIPPING, INSTALLING AND BRACING. REFER TO BCSI (BUILDING COMPONENT SAFETY INFORMATION), PUBLISHED BY TPI (TRUSS PLATE INSTITUTE, 218 NORTH LEE STREET, SUITE 312, ALEXANDRIA, VA, 22314) AND WTCA (WOOD TRUSS COUNCIL OF AMERICA, 6300 ENTERPRISE LANE, MADISON, WI 53719) FOR SAFETY PRACTICES PRIOR TO PERFORMING THESE FUNCTIONS. UNLESS OTHERWISE INDICATED TOP CHORD SHALL HAVE PROPERLY ATTACHED STRUCTURAL PANELS AND BOTTOM CHORD SHALL HAVE A PROPERLY ATTACHED RIGID CEILING.

IMPORTANT FURNISH A COPY OF THIS DESIGN TO THE INSTALLATION CONTRACTOR. ITW BCG, INC. SHALL NOT BE RESPONSIBLE FOR ANY DEVIATION FROM THIS DESIGN; ANY FAILURE TO BUILD THE TRUSS IN COMFORMANCE WITH TPI; OR FABRICATING, HANDLING, SHIPPING, INSTALLING & BRACING OF TRUSSES. DESIGN CONFORMS WITH APPLICABLE PROVISIONS OF NDS (NATIONAL DESIGN SPEC. BY AF&PA) AND TPI. ITW BCG CONNECTOR PLATES ARE MADE OF 20/18/16GA (W,H/SS/K) ASTM A653 GRADE 40/60 (W, K/H,SS) GALV. STEEL. APPLY PLATES TO EACH FACE OF TRUSS AND, UNLESS OTHERWISE LOCATED ON THIS DESIGN, POSITION PER DRAWINGS 160A-Z. ANY INSPECTION OF PLATES FOLLOWED BY (1) SHALL BE PER ANNEX A3 OF TPI1-2002 SEC.3. A SEAL ON THIS DRAWING INDICATES ACCEPTANCE OF PROFESSIONAL ENGINEERING RESPONSIBILITY SOLELY FOR THE TRUSS COMPONENT DESIGN SHOWN. THE SUITABILITY AND USE OF THIS COMPONENT FOR ANY BUILDING IS THE RESPONSIBILITY OF THE BUILDING DESIGNER PER ANSI/TPI 1 SEC. 2.

DOUGLAS FLEMING LICENSE No. 66648 STATE OF FLORIDA PROFESSIONAL ENGINEER

[illegible]20 '09

TC LL	20.0 PSF	REF	R8228- 19882
TC DL	10.0 PSF	DATE	08/20/09
BC DL	10.0 PSF	DRW	HCUSR8228 09232015
BC LL	0.0 PSF	HC-ENG	DF/DF
TOT.LD.	40.0 PSF	SEQN-	9487
DUR.FAC.	1.25	FROM	AH
SPACING	24.0"	JREF-	1TUD8228Z01

Top chord 2x6 SP #2
Bot chord 2x6 SP #2
Webs 2x4 SP #3

Roof overhang supports 2.00 psf soffit load.

(A) Continuous lateral bracing equally spaced on member.

Truss passed check for 20 psf additional bottom chord live load in areas with 42"-high x 24"-wide clearance.

Deflection meets L/240 live and L/180 total load.

110 mph wind, 15.00 ft mean hgt, ASCE 7-05, PART._ENC. bldg, not located within 6.50 ft from roof edge, CAT II, EXP B, wind TC DL=5.0 psf, wind BC DL=5.0 psf. Iw=1.00 GCpi(+/-)=0.55

Wind reactions based on MWFRS pressures.

In lieu of structural panels use purlins to brace all flat TC @ 24" OC.

Bottom chord checked for 10.00 psf non-concurrent live load.

WARNING: Furnish a copy of this DWG to the installation contractor. Special care must be taken during handling, shipping and installation of trusses. See "WARNING" note below.

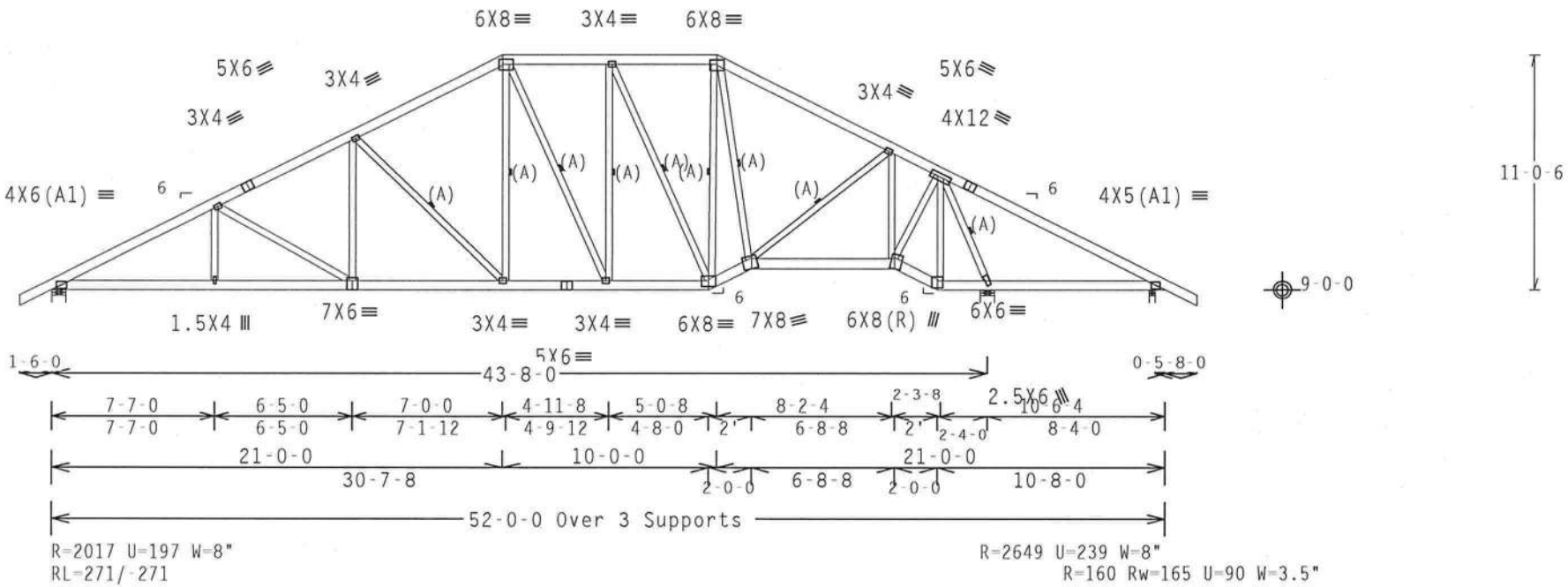

Design Crit: FBC2007Res/TPI-2002(STD)

PLT TYP. Wave | FT/RT=10%(0%)/0(0) | 8.07.00 | QTY:3 | FL/-/4/-/-/R/- | Scale =.125"/Ft.

ALPINE
ITW Building Components Group Inc.
Haines City, FL 33844
FL Co. #0278

WARNING TRUSSES REQUIRE EXTREME CARE IN FABRICATION, HANDLING, SHIPPING, INSTALLING AND BRACING. REFER TO BCSI (BUILDING COMPONENT SAFETY INFORMATION), PUBLISHED BY TPI (TRUSS PLATE INSTITUTE, 218 NORTH LEE STREET, SUITE 312, ALEXANDRIA, VA, 22314) AND WTCA (WOOD TRUSS COUNCIL OF AMERICA, 6300 ENTERPRISE LANE, MADISON, WI 53719) FOR SAFETY PRACTICES PRIOR TO PERFORMING THESE FUNCTIONS. UNLESS OTHERWISE INDICATED TOP CHORD SHALL HAVE PROPERLY ATTACHED STRUCTURAL PANELS AND BOTTOM CHORD SHALL HAVE A PROPERLY ATTACHED RIGID CEILING.

IMPORTANT FURNISH A COPY OF THIS DESIGN TO THE INSTALLATION CONTRACTOR. ITW BCG, INC. SHALL NOT BE RESPONSIBLE FOR ANY DEVIATION FROM THIS DESIGN; ANY FAILURE TO BUILD THE TRUSS IN CONFORMANCE WITH TPI; OR FABRICATING, HANDLING, SHIPPING, INSTALLING & BRACING OF TRUSSES. DESIGN CONFORMS WITH APPLICABLE PROVISIONS OF NDS (NATIONAL DESIGN SPEC, BY AF&PA) AND TPI. ITW BCG CONNECTOR PLATES ARE MADE OF 20/18/16GA (W,H/SS/K) ASTM A653 GRADE 40/60 (W, K/H,SS) GALV. STEEL. APPLY PLATES TO EACH FACE OF TRUSS AND, UNLESS OTHERWISE LOCATED ON THIS DESIGN, POSITION PER DRAWINGS 160A-Z. ANY INSPECTION OF PLATES FOLLOWED BY (1) SHALL BE PER ANNEX A3 OF TPI1-2002 SEC.3. A SEAL ON THIS DRAWING INDICATES ACCEPTANCE OF PROFESSIONAL ENGINEERING RESPONSIBILITY SOLELY FOR THE TRUSS COMPONENT DESIGN SHOWN. THE SUITABILITY AND USE OF THIS COMPONENT FOR ANY BUILDING IS THE RESPONSIBILITY OF THE BUILDING DESIGNER PER ANSI/TPI 1 SEC. 2.

DOUGLAS FLEMING LICENSE No. 66648 STATE OF FLORIDA PROFESSIONAL ENGINEER

20 '09

TC LL	20.0 PSF	REF R8228- 19883
TC DL	10.0 PSF	DATE 08/20/09
BC DL	10.0 PSF	DRW HCUSR8228 09232002
BC LL	0.0 PSF	HC-ENG DF/DF
TOT.LD.	40.0 PSF	SEQN- 9508
DUR.FAC.	1.25	FROM AH
SPACING	24.0"	JREF- 1TUD8228Z01

(9-070--Freeman Design Group Hudson -- , ** - A1)

Top chord 2x6 SP #2
Bot chord 2x6 SP #2
Webs 2x4 SP #3

Roof overhang supports 2.00 psf soffit load.

(B) 2x4 #3 or better "T" brace. 80% length of web member. Attach with 16d Box or Gun (0.135"x3.5",min.)nails @ 6" OC.

In lieu of structural panels use purlins to brace all flat TC @ 24" OC.

WARNING: Furnish a copy of this DWG to the installation contractor. Special care must be taken during handling, shipping and installation of trusses. See "WARNING" note below.

110 mph wind, 15.00 ft mean hgt, ASCE 7-05, PART._ENC. bldg, not located within 6.50 ft from roof edge, CAT II, EXP B, wind TC DL=5.0 psf, wind BC DL=5.0 psf. Iw=1.00 GCpi(+/-)=0.55

Wind reactions based on MWFRS pressures.

(A) 2x6 #3 or better "T" brace. 80% length of web member. Attach with 16d Box or Gun (0.135"x3.5",min.)nails @ 6" OC.

Bottom chord checked for 10.00 psf non-concurrent live load.

Deflection meets L/240 live and L/180 total load.

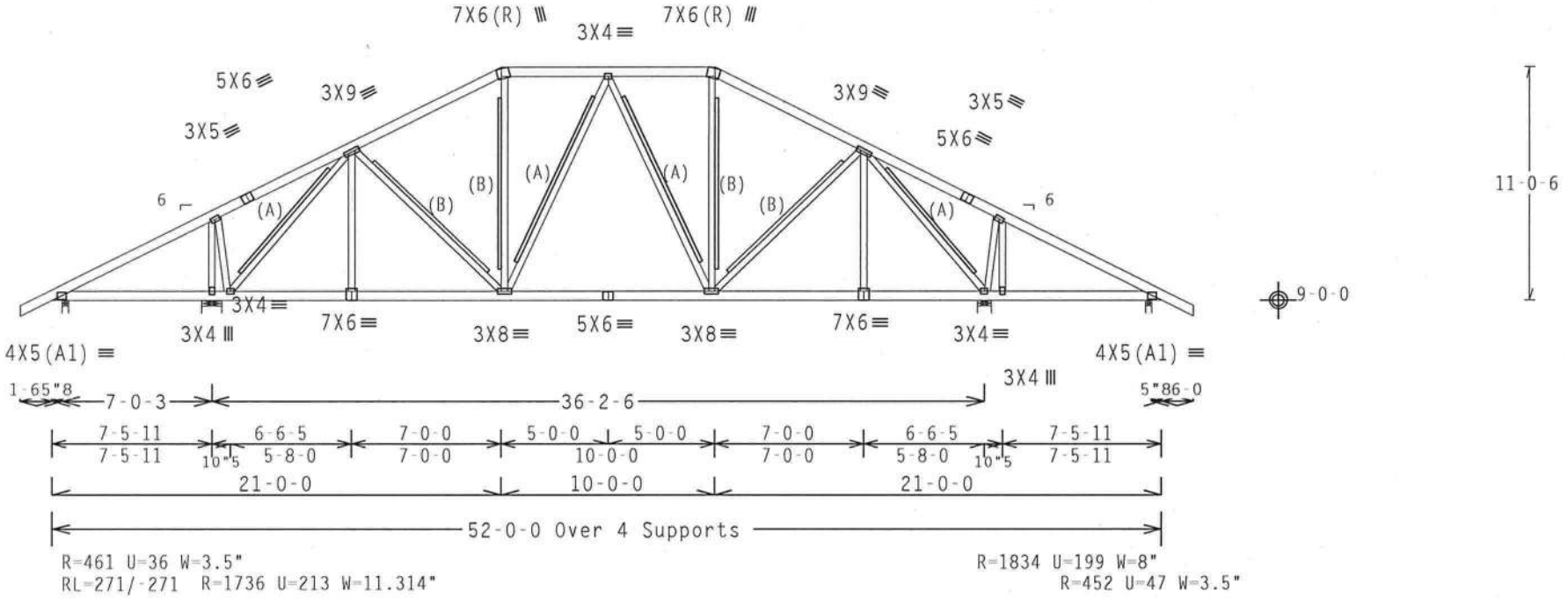

Design Crit: FBC2007Res/TPI-2002(STD)

PLT TYP. Wave FT/RT=10%(0%)/0(0) 8.07.00 QTY:1 FL/-/4/-/-/R/- Scale =.125"/Ft.

ALPINE
ITW Building Components Group Inc.
Haines City, FL 33844
FL C[illegible]78

WARNING TRUSSES REQUIRE EXTREME CARE IN FABRICATION, HANDLING, SHIPPING, INSTALLING AND BRACING. REFER TO BCSI (BUILDING COMPONENT SAFETY INFORMATION), PUBLISHED BY TPI (TRUSS PLATE INSTITUTE, 218 NORTH LEE STREET, SUITE 312, ALEXANDRIA, VA, 22314) AND WTCA (WOOD TRUSS COUNCIL OF AMERICA, 6300 ENTERPRISE LANE, MADISON, WI 53719) FOR SAFETY PRACTICES PRIOR TO PERFORMING THESE FUNCTIONS. UNLESS OTHERWISE INDICATED TOP CHORD SHALL HAVE PROPERLY ATTACHED STRUCTURAL PANELS AND BOTTOM CHORD SHALL HAVE A PROPERLY ATTACHED RIGID CEILING.

IMPORTANTFURNISH A COPY OF THIS DESIGN TO THE INSTALLATION CONTRACTOR. ITW BCG, INC. SHALL NOT BE RESPONSIBLE FOR ANY DEVIATION FROM THIS DESIGN; ANY FAILURE TO BUILD THE TRUSS IN CONFORMANCE WITH TPI; OR FABRICATING, HANDLING, SHIPPING, INSTALLING & BRACING OF TRUSSES. DESIGN CONFORMS WITH APPLICABLE PROVISIONS OF NDS (NATIONAL DESIGN SPEC. BY AF&PA) AND TPI. ITW BCG CONNECTOR PLATES ARE MADE OF 20/18/16GA (W,H/SS/K) ASTM A653 GRADE 40/60 (W, K/H,SS) GALV. STEEL. APPLY PLATES TO EACH FACE OF TRUSS AND, UNLESS OTHERWISE LOCATED ON THIS DESIGN, POSITION PER DRAWINGS 160A-Z. ANY INSPECTION OF PLATES FOLLOWED BY (1) SHALL BE PER ANNEX A3 OF TPI1-2002 SEC.3. A SEAL ON THIS DRAWING INDICATES ACCEPTANCE OF PROFESSIONAL ENGINEERING RESPONSIBILITY SOLELY FOR THE TRUSS COMPONENT DESIGN SHOWN. THE SUITABILITY AND USE OF THIS COMPONENT FOR ANY BUILDING IS THE RESPONSIBILITY OF THE BUILDING DESIGNER PER ANSI/TPI 1 SEC. 2.

DOUGLAS FLEMING LICENSE No. 66648 STATE OF FLORIDA PROFESSIONAL ENGINEER
9 20 '09

TC LL	20.0 PSF	REF R8228- 19884
TC DL	10.0 PSF	DATE 08/20/09
BC DL	10.0 PSF	DRW HCUSR8228 09232003
BC LL	0.0 PSF	HC-ENG DF/DF
TOT.LD.	40.0 PSF	SEQN- 9530
DUR.FAC.	1.25	FROM AH
SPACING	24.0"	JREF- 1TUD8228Z01

Top chord 2x6 SP #2
Bot chord 2x6 SP #2
Webs 2x4 SP #3

Roof overhang supports 2.00 psf soffit load.

(C) 1x4 #3SRB SPF-S or better "T" brace. 80% length of web member. Attach with 8d Box or Gun (0.113"x2.5",min.)nails @ 6" OC.

(B) 2x6 #3 or better "T" brace. 80% length of web member. Attach with 16d Box or Gun (0.135"x3.5",min.)nails @ 6" OC.

Bottom chord checked for 10.00 psf non-concurrent live load.

WARNING: Furnish a copy of this DWG to the installation contractor. Special care must be taken during handling, shipping and installation of trusses. See "WARNING" note below.

110 mph wind, 15.00 ft mean hgt, ASCE 7-05, PART. ENC. bldg, not located within 6.50 ft from roof edge, CAT II, EXP B, wind TC DL=5.0 psf, wind BC DL=5.0 psf. Iw=1.00 GCpi(+/-)=0.55

Wind reactions based on MWFRS pressures.

(A) 2x4 #3 or better "T" brace. 80% length of web member. Attach with 16d Box or Gun (0.135"x3.5",min.)nails @ 6" OC.

In lieu of structural panels use purlins to brace all flat TC @ 24" OC.

Deflection meets L/240 live and L/180 total load.

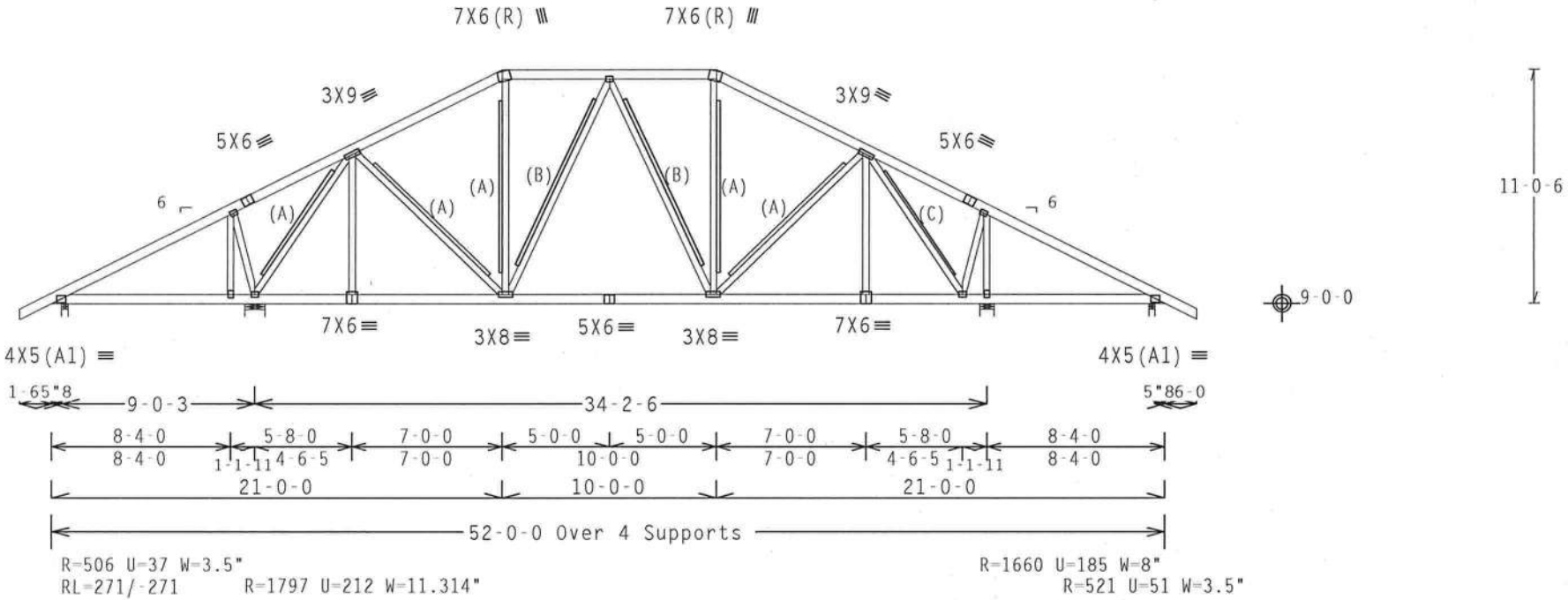

Note: All Plates Are 3X4 Except As Shown.

Design Crit: FBC2007Res/TPI-2002(STD)

PLT TYP. Wave FT/RT=10%(0%)/0(0) 8.07.0 QTY:1 FL/-/4/-/-/R/- Scale =.125"/Ft.

ALPINE
ITW Building Components Group Inc.
Haines City, FL 33844
FL C

WARNING TRUSSES REQUIRE EXTREME CARE IN FABRICATION, HANDLING, SHIPPING, INSTALLING AND BRACING. REFER TO BCSI (BUILDING COMPONENT SAFETY INFORMATION), PUBLISHED BY TPI (TRUSS PLATE INSTITUTE, 218 NORTH LEE STREET, SUITE 312, ALEXANDRIA, VA, 22314) AND WTCA (WOOD TRUSS COUNCIL OF AMERICA, 6300 ENTERPRISE LANE, MADISON, WI 53719) FOR SAFETY PRACTICES PRIOR TO PERFORMING THESE FUNCTIONS. UNLESS OTHERWISE INDICATED TOP CHORD SHALL HAVE PROPERLY ATTACHED STRUCTURAL PANELS AND BOTTOM CHORD SHALL HAVE A PROPERLY ATTACHED RIGID CEILING.

IMPORTANT FURNISH A COPY OF THIS DESIGN TO THE INSTALLATION CONTRACTOR. ITW BCG, INC. SHALL NOT BE RESPONSIBLE FOR ANY DEVIATION FROM THIS DESIGN; ANY FAILURE TO BUILD THE TRUSS IN CONFORMANCE WITH TPI; OR FABRICATING, HANDLING, SHIPPING, INSTALLING & BRACING OF TRUSSES.
DESIGN CONFORMS WITH APPLICABLE PROVISIONS OF NDS (NATIONAL DESIGN SPEC, BY AF&PA) AND TPI. ITW BCG CONNECTOR PLATES ARE MADE OF 20/18/16GA (W,H/SS/K) ASTM A653 GRADE 40/60 (W, K/H,SS) GALV. STEEL. APPLY PLATES TO EACH FACE OF TRUSS AND, UNLESS OTHERWISE LOCATED ON THIS DESIGN, POSITION PER DRAWINGS 160A-Z. ANY INSPECTION OF PLATES FOLLOWED BY (1) SHALL BE PER ANNEX A3 OF TPI1-2002 SEC.3. A SEAL ON THIS DRAWING INDICATES ACCEPTANCE OF PROFESSIONAL ENGINEERING RESPONSIBILITY SOLELY FOR THE TRUSS COMPONENT DESIGN SHOWN. THE SUITABILITY AND USE OF THIS COMPONENT FOR ANY BUILDING IS THE RESPONSIBILITY OF THE BUILDING DESIGNER PER ANSI/TPI 1 SEC. 2.

DOUGLAS FLEMING LICENSE No. 66648 STATE OF FLORIDA PROFESSIONAL ENGINEER
Aug 20 '09

TC LL	20.0 PSF	REF R8228- 19885
TC DL	10.0 PSF	DATE 08/20/09
BC DL	10.0 PSF	DRW HCUSR8228 09232004
BC LL	0.0 PSF	HC-ENG DF/DF
TOT.LD.	40.0 PSF	SEQN- 9527
DUR.FAC.	1.25	FROM AH
SPACING	24.0"	JREF- 1TUD8228Z01

Top chord 2x6 SP #2
Bot chord 2x6 SP #2
Webs 2x4 SP #3

Roof overhang supports 2.00 psf soffit load.

(A) 1x4 #3SRB SPF-S or better "T" brace. 80% length of web member. Attach with 8d Box or Gun (0.113"x2.5",min.)nails @ 6" OC.

(C) 2x6 #3 or better "T" brace. 80% length of web member. Attach with 16d Box or Gun (0.135"x3.5",min.)nails @ 6" OC.

Bottom chord checked for 10.00 psf non-concurrent live load.

WARNING: Furnish a copy of this DWG to the installation contractor. Special care must be taken during handling, shipping and installation of trusses. See "WARNING" note below.

110 mph wind, 15.00 ft mean hgt, ASCE 7-05, PART._ENC. bldg, not located within 6.50 ft from roof edge, CAT II, EXP B, wind TC DL=5.0 psf, wind BC DL=5.0 psf. Iw=1.00 GCpi(+/-)=0.55

Wind reactions based on MWFRS pressures.

(B) 2x4 #3 or better "T" brace. 80% length of web member. Attach with 16d Box or Gun (0.135"x3.5",min.)nails @ 6" OC.

In lieu of structural panels use purlins to brace all flat TC @ 24" OC.

Deflection meets L/240 live and L/180 total load.

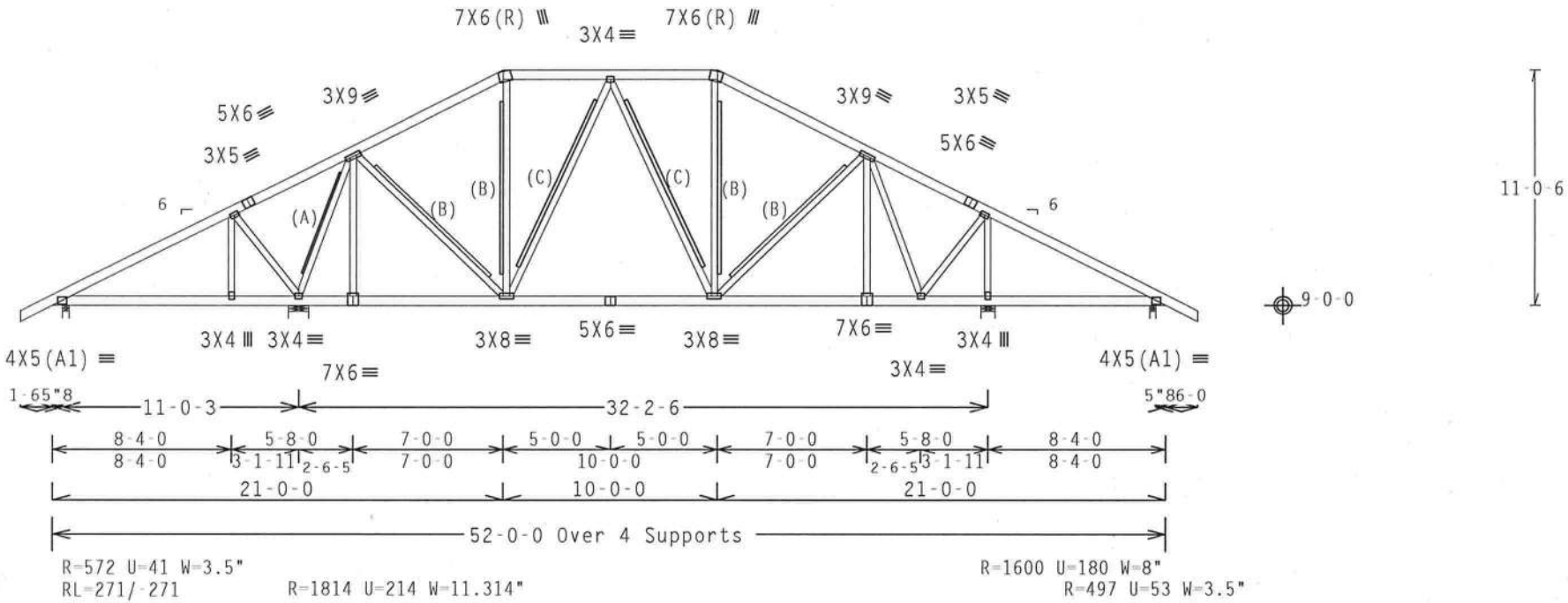

Design Crit: FBC2007Res/TPI-2002(STD)

PLT TYP. Wave FT/RT=10%(0%)/0(0) 8.07.00.1 QTY:1 FL/-/4/-/-/R/- Scale =.125"/Ft.

ALPINE
ITW Building Components Group Inc.
Haines City, FL 33844
FL C[illegible]278

WARNING TRUSSES REQUIRE EXTREME CARE IN FABRICATION, HANDLING, SHIPPING, INSTALLING AND BRACING. REFER TO BCSI (BUILDING COMPONENT SAFETY INFORMATION), PUBLISHED BY TPI (TRUSS PLATE INSTITUTE, 218 NORTH LEE STREET, SUITE 312, ALEXANDRIA, VA, 22314) AND WTCA (WOOD TRUSS COUNCIL OF AMERICA, 6300 ENTERPRISE LANE, MADISON, WI 53719) FOR SAFETY PRACTICES PRIOR TO PERFORMING THESE FUNCTIONS. UNLESS OTHERWISE INDICATED TOP CHORD SHALL HAVE PROPERLY ATTACHED STRUCTURAL PANELS AND BOTTOM CHORD SHALL HAVE A PROPERLY ATTACHED RIGID CEILING.

IMPORTANTFURNISH A COPY OF THIS DESIGN TO THE INSTALLATION CONTRACTOR. ITW BCG, INC. SHALL NOT BE RESPONSIBLE FOR ANY DEVIATION FROM THIS DESIGN; ANY FAILURE TO BUILD THE TRUSS IN COMFORMANCE WITH TPI; OR FABRICATING, HANDLING, SHIPPING, INSTALLING & BRACING OF TRUSSES.
DESIGN CONFORMS WITH APPLICABLE PROVISIONS OF NDS (NATIONAL DESIGN SPEC, BY AF&PA) AND TPI. ITW BCG CONNECTOR PLATES ARE MADE OF 20/18/16GA (W,H/SS/X) ASTM A653 GRADE 40/60 (W, K/H,SS) GALV. STEEL. APPLY PLATES TO EACH FACE OF TRUSS AND, UNLESS OTHERWISE LOCATED ON THIS DESIGN, POSITION PER DRAWINGS 160A-Z. ANY INSPECTION OF PLATES FOLLOWED BY (1) SHALL BE PER ANNEX A3 OF TPI1-2002 SEC.3. A SEAL ON THIS DRAWING INDICATES ACCEPTANCE OF PROFESSIONAL ENGINEERING RESPONSIBILITY SOLELY FOR THE TRUSS COMPONENT DESIGN SHOWN. THE SUITABILITY AND USE OF THIS COMPONENT FOR ANY BUILDING IS THE RESPONSIBILITY OF THE BUILDING DESIGNER PER ANSI/TPI 1 SEC. 2.

DOUGLAS FLEMING LICENSE No. 66648 STATE OF FLORIDA PROFESSIONAL ENGINEER
[illegible]20 '09

TC LL	20.0 PSF	REF	R8228- 19886
TC DL	10.0 PSF	DATE	08/20/09
BC DL	10.0 PSF	DRW	HCUSR8228 09232005
BC LL	0.0 PSF	HC-ENG	DF/DF
TOT.LD.	40.0 PSF	SEQN-	9540
DUR.FAC.	1.25	FROM	AH
SPACING	24.0"	JREF-	1TUD8228Z01

(9-070--Freeman Design Group Hudson -- , ** - H17A)

Top chord 2x6 SP #2
Bot chord 2x6 SP #2
Webs 2x4 SP #3

110 mph wind, 15.00 ft mean hgt, ASCE 7-05, PART._ENC. bldg, not located within 4.50 ft from roof edge, CAT II, EXP B, wind TC DL=5.0 psf, wind BC DL=5.0 psf. Iw=1.00 GCpi(+/-)=0.55

Wind reactions based on MWFRS pressures.

Roof overhang supports 2.00 psf soffit load.

(B) 1x4 #3SRB SPF-S or better "T" brace. 80% length of web member. Attach with 8d Box or Gun (0.113"x2.5",min.)nails @ 6" OC.

(C) 2x4 #3 or better "T" brace. 80% length of web member. Attach with 16d Box or Gun (0.135"x3.5",min.)nails @ 6" OC.

In lieu of structural panels use purlins to brace all flat TC @ 24" OC.

WARNING: Furnish a copy of this DWG to the installation contractor. Special care must be taken during handling, shipping and installation of trusses. See "WARNING" note below.

Special loads
------(Lumber Dur.Fac.=1.25 / Plate Dur.Fac.=1.25)

TC - From	62 plf at	-1.50 to	62 plf at	9.03
TC - From	62 plf at	9.03 to	62 plf at	17.00
TC - From	62 plf at	17.00 to	62 plf at	27.00
TC - From	62 plf at	27.00 to	62 plf at	35.00
TC - From	62 plf at	35.00 to	62 plf at	42.97
TC - From	62 plf at	42.97 to	62 plf at	53.50
BC - From	4 plf at	-1.50 to	4 plf at	0.00
BC - From	20 plf at	0.00 to	20 plf at	14.00
BC - From	20 plf at	14.00 to	20 plf at	26.00
BC - From	20 plf at	26.00 to	20 plf at	38.00
BC - From	20 plf at	38.00 to	20 plf at	52.00
BC - From	4 plf at	52.00 to	4 plf at	53.50
BC -	736 lb Conc. Load at 16.60			

(A) 2x6 #3 or better "T" brace. 80% length of web member. Attach with 16d Box or Gun (0.135"x3.5",min.)nails @ 6" OC.

Bottom chord checked for 10.00 psf non-concurrent live load.

This truss is not reversible. Per ANSI/TPI 1-2002, Section 2.4.3 Truss Manufacturer is responsible to provide information for proper orientation of trusses. This information shall be provided to the contractor.

Deflection meets L/240 live and L/180 total load.

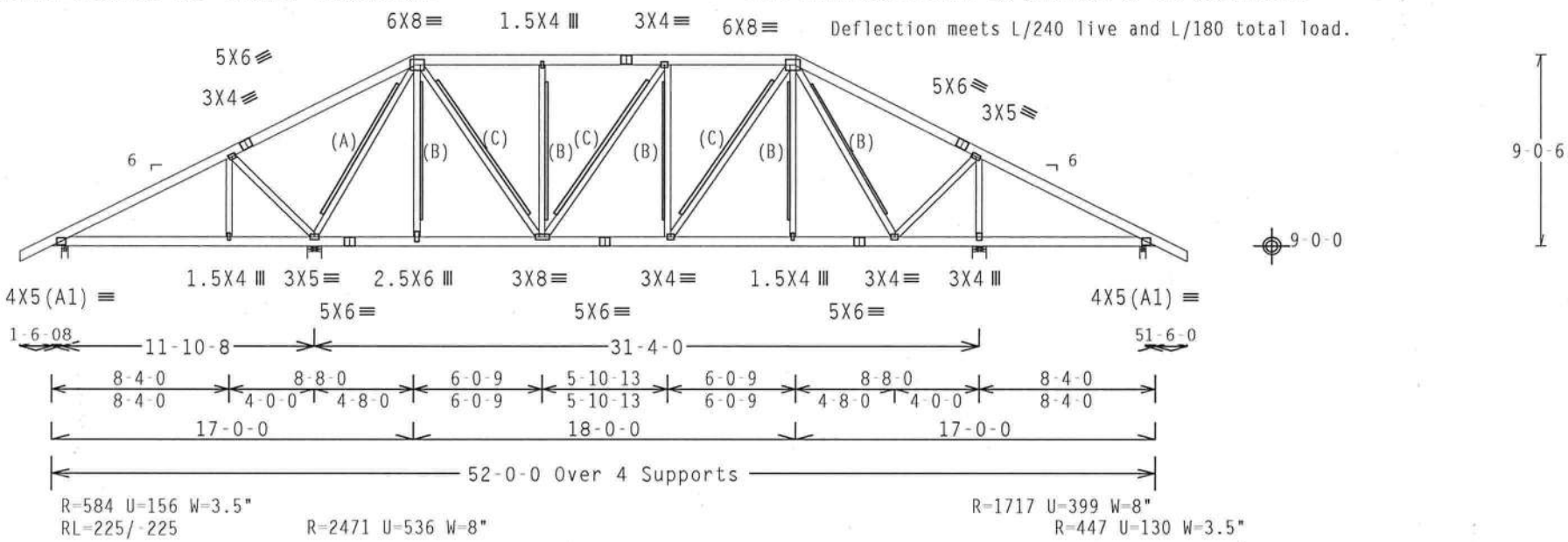

Design Crit: FBC2007Res/TPI-2002(STD)

PLT TYP. Wave FT/RT=10%(0%)/0(0) 9.02.00 QTY:1 FL/-/4/-/-/R/- Scale =.125"/Ft.

ALPINE
ITW Building Components Group Inc.
Haines City, FL 33844
FL C[illegible]78

WARNING TRUSSES REQUIRE EXTREME CARE IN FABRICATION, HANDLING, SHIPPING, INSTALLING AND BRACING. REFER TO BCSI (BUILDING COMPONENT SAFETY INFORMATION), PUBLISHED BY TPI (TRUSS PLATE INSTITUTE, 218 NORTH LEE STREET, SUITE 312, ALEXANDRIA, VA. 22314) AND WTCA (WOOD TRUSS COUNCIL OF AMERICA, 6300 ENTERPRISE LANE, MADISON, WI 53719) FOR SAFETY PRACTICES PRIOR TO PERFORMING THESE FUNCTIONS. UNLESS OTHERWISE INDICATED TOP CHORD SHALL HAVE PROPERLY ATTACHED STRUCTURAL PANELS AND BOTTOM CHORD SHALL HAVE A PROPERLY ATTACHED RIGID CEILING.

IMPORTANTFURNISH A COPY OF THIS DESIGN TO THE INSTALLATION CONTRACTOR. ITW BCG, INC. SHALL NOT BE RESPONSIBLE FOR ANY DEVIATION FROM THIS DESIGN; ANY FAILURE TO BUILD THE TRUSS IN CONFORMANCE WITH TPI; OR FABRICATING, HANDLING, SHIPPING, INSTALLING & BRACING OF TRUSSES. DESIGN CONFORMS WITH APPLICABLE PROVISIONS OF NDS (NATIONAL DESIGN SPEC, BY AF&PA) AND TPI. ITW BCG CONNECTOR PLATES ARE MADE OF 20/18/16GA (W,H/SS/K) ASTM A653 GRADE 40/60 (W, K/H,SS) GALV. STEEL. APPLY PLATES TO EACH FACE OF TRUSS AND, UNLESS OTHERWISE LOCATED ON THIS DESIGN, POSITION PER DRAWINGS 160A-Z. ANY INSPECTION OF PLATES FOLLOWED BY (1) SHALL BE PER ANNEX A3 OF TPI1-2002 SEC.3. A SEAL ON THIS DRAWING INDICATES ACCEPTANCE OF PROFESSIONAL ENGINEERING RESPONSIBILITY SOLELY FOR THE TRUSS COMPONENT DESIGN SHOWN. THE SUITABILITY AND USE OF THIS COMPONENT FOR ANY BUILDING IS THE RESPONSIBILITY OF THE BUILDING DESIGNER PER ANSI/TPI 1 SEC. 2.

DOUGLAS FLEMING LICENSE No. 66648 STATE OF FLORIDA PROFESSIONAL ENGINEER
[illegible] 20 '09

TC LL	20.0 PSF	REF	R8228- 19887
TC DL	10.0 PSF	DATE	08/20/09
BC DL	10.0 PSF	DRW	HCUSR8228 09232005
BC LL	0.0 PSF	HC-ENG	KD/DF
TOT.LD.	40.0 PSF	SEQN-	66339
DUR.FAC.	1.25	FROM	AH
SPACING	24.0"	JREF-	1TUD8228Z01

(9-070--Freeman Design Group Hudson -- , ** - H13A)

Top chord 2x6 SP #2
Bot chord 2x6 SP #2
Webs 2x4 SP #3

110 mph wind, 15.00 ft mean hgt, ASCE 7-05, PART._ENC. bldg, not located within 4.50 ft from roof edge, CAT II, EXP B, wind TC DL=5.0 psf, wind BC DL=5.0 psf. Iw=1.00 GCpi(+/-)=0.55

Wind reactions based on MWFRS pressures.

Roof overhang supports 2.00 psf soffit load.

(A) 1x4 #3SRB SPF-S or better "T" brace. 80% length of web member. Attach with 8d Box or Gun (0.113"x2.5",min.)nails @ 6" OC.

In lieu of structural panels use purlins to brace all flat TC @ 24" OC.

WARNING: Furnish a copy of this DWG to the installation contractor. Special care must be taken during handling, shipping and installation of trusses. See "WARNING" note below.

This truss is not reversible. Per ANSI/TPI 1-2002, Section 2.4.3 Truss Manufacturer is responsible to provide information for proper orientation of trusses. This information shall be provided to the contractor.

Special loads
------(Lumber Dur.Fac.=1.25 / Plate Dur.Fac.=1.25)

TC - From	62 plf at	-1.50 to	62 plf at	7.24
TC - From	62 plf at	7.24 to	62 plf at	13.00
TC - From	62 plf at	13.00 to	62 plf at	27.00
TC - From	62 plf at	27.00 to	62 plf at	39.00
TC - From	62 plf at	39.00 to	62 plf at	44.76
TC - From	62 plf at	44.76 to	62 plf at	53.50
BC - From	4 plf at	-1.50 to	4 plf at	0.00
BC - From	20 plf at	0.00 to	20 plf at	14.00
BC - From	20 plf at	14.00 to	20 plf at	26.00
BC - From	20 plf at	26.00 to	20 plf at	38.00
BC - From	20 plf at	38.00 to	20 plf at	52.00
BC - From	4 plf at	52.00 to	4 plf at	53.50

BC - 736 lb Conc. Load at 16.60

Bottom chord checked for 10.00 psf non-concurrent live load.

Deflection meets L/240 live and L/180 total load.

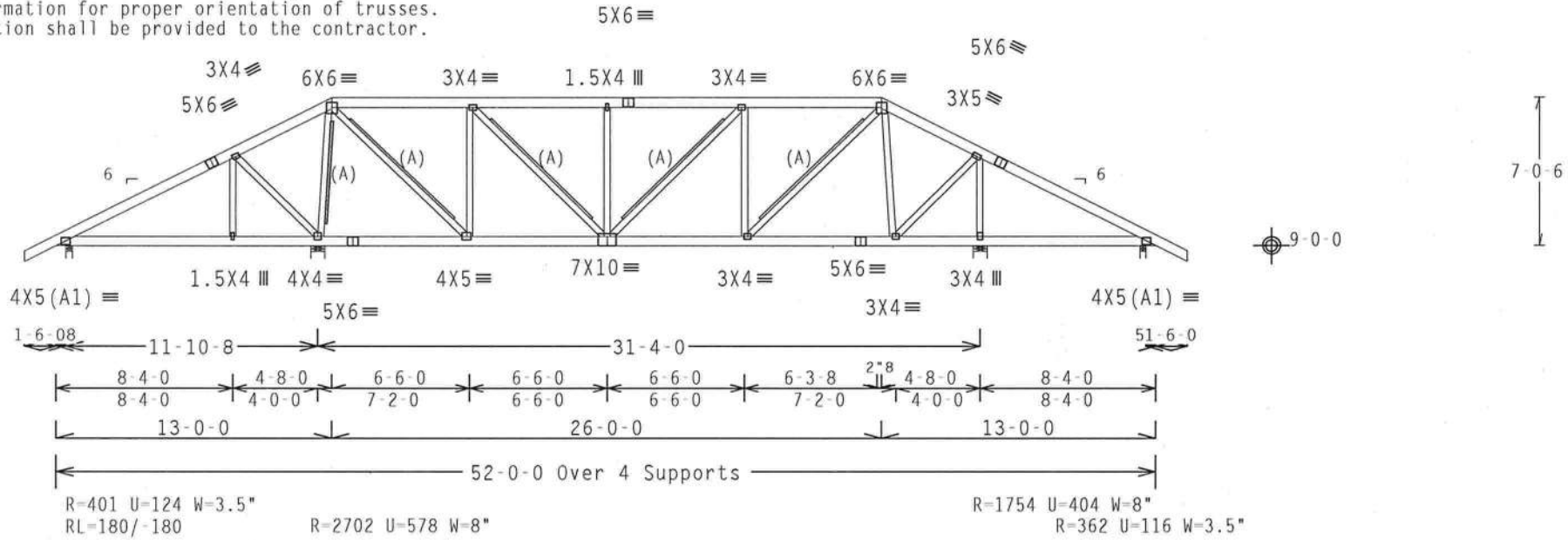

Design Crit: FBC2007Res/TPI-2002(STD)

PLT TYP. Wave FT/RT=10%(0%)/0(0) 9.02.00 QTY:1 FL/-/4/-/-/R/- Scale =.125"/Ft.

ALPINE
ITW Building Components Group Inc.
Haines City, FL 33844
FL COA #0-278

WARNING TRUSSES REQUIRE EXTREME CARE IN FABRICATION, HANDLING, SHIPPING, INSTALLING AND BRACING. REFER TO BCSI (BUILDING COMPONENT SAFETY INFORMATION), PUBLISHED BY TPI (TRUSS PLATE INSTITUTE, 218 NORTH LEE STREET, SUITE 312, ALEXANDRIA, VA. 22314) AND WTCA (WOOD TRUSS COUNCIL OF AMERICA, 6300 ENTERPRISE LANE, MADISON, WI 53719) FOR SAFETY PRACTICES PRIOR TO PERFORMING THESE FUNCTIONS. UNLESS OTHERWISE INDICATED TOP CHORD SHALL HAVE PROPERLY ATTACHED STRUCTURAL PANELS AND BOTTOM CHORD SHALL HAVE A PROPERLY ATTACHED RIGID CEILING.

IMPORTANTFURNISH A COPY OF THIS DESIGN TO THE INSTALLATION CONTRACTOR. ITW BCG, INC. SHALL NOT BE RESPONSIBLE FOR ANY DEVIATION FROM THIS DESIGN; ANY FAILURE TO BUILD THE TRUSS IN COMFORMANCE WITH TPI; OR FABRICATING, HANDLING, SHIPPING, INSTALLING & BRACING OF TRUSSES. DESIGN CONFORMS WITH APPLICABLE PROVISIONS OF NDS (NATIONAL DESIGN SPEC, BY AF&PA) AND TPI. ITW BCG CONNECTOR PLATES ARE MADE OF 20/18/16GA (W,H/SS/K) ASTM A653 GRADE 40/60 (W, K/H,SS) GALV. STEEL. APPLY PLATES TO EACH FACE OF TRUSS AND, UNLESS OTHERWISE LOCATED ON THIS DESIGN, POSITION PER DRAWINGS 160A-Z. ANY INSPECTION OF PLATES FOLLOWED BY (1) SHALL BE PER ANNEX A3 OF TPI1-2002 SEC.3. A SEAL ON THIS DRAWING INDICATES ACCEPTANCE OF PROFESSIONAL ENGINEERING RESPONSIBILITY SOLELY FOR THE TRUSS COMPONENT DESIGN SHOWN. THE SUITABILITY AND USE OF THIS COMPONENT FOR ANY BUILDING IS THE RESPONSIBILITY OF THE BUILDING DESIGNER PER ANSI/TPI 1 SEC. 2.

DOUGLAS FLEMING LICENSE No. 66648 STATE OF FLORIDA PROFESSIONAL ENGINEER
Aug 20 '09

TC LL	20.0 PSF	REF	R8228- 19888
TC DL	10.0 PSF	DATE	08/20/09
BC DL	10.0 PSF	DRW	HCUSR8228 09232004
BC LL	0.0 PSF	HC-ENG	KD/DF
TOT.LD.	40.0 PSF	SEQN-	66336
DUR.FAC.	1.25	FROM	AH
SPACING	24.0"	JREF-	1TUD8228Z01

(9-070--Freeman Design Group Hudson -- , ** - H15A)

Top chord 2x6 SP #2
Bot chord 2x6 SP #2
Webs 2x4 SP #3

Left end vertical not exposed to wind pressure.

Roof overhang supports 2.00 psf soffit load.

(A) Continuous lateral bracing equally spaced on member.

In lieu of structural panels use purlins to brace all flat TC @ 24" OC.

Deflection meets L/240 live and L/180 total load.

110 mph wind, 15.00 ft mean hgt, ASCE 7-05, CLOSED bldg, not located within 4.50 ft from roof edge, CAT II, EXP B, wind TC DL=5.0 psf, wind BC DL=5.0 psf. Iw=1.00 GCpi(+/-)=0.18

Wind reactions based on MWFRS pressures.

H = recommended connection based on manufacturer tested capacities and calculations. Conditions may exist that require different connections than indicated. Refer to manufacturer publication for additional information.

Bottom chord checked for 10.00 psf non-concurrent live load.

MWFRS loads based on trusses located at least 15.00 ft. from roof edge.

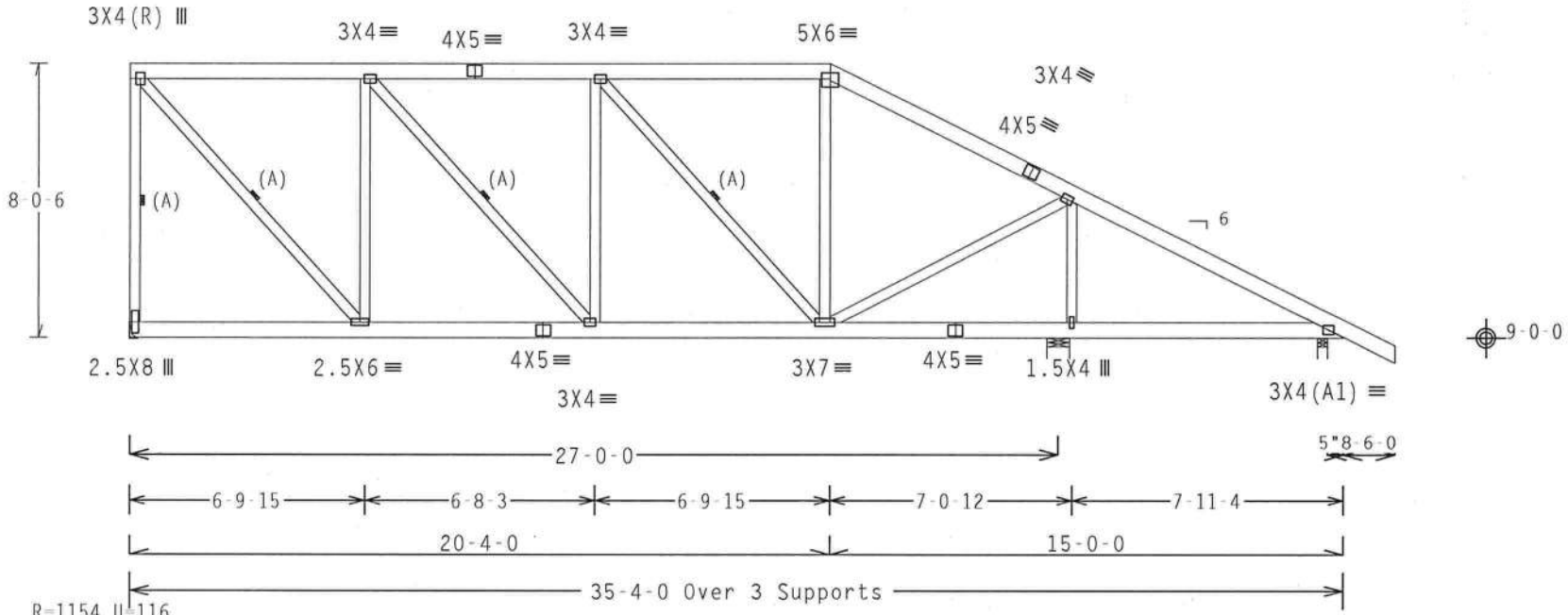

R=1154 U=116
RL=64/-127 H=Simpson HUS26
w/ (4) 10d Common, 0.148"x3.0" nails in Truss
w/ (14) 10d, 0.148"x1.5" nails in Girder
Girder is (1)2X6 min. So.Pine

R=622 W=3.5"
R=1234 U=29 W=8"

Design Crit: FBC2007Res/TPI-2002(STD)

PLT TYP. Wave FT/RT=10%(0%)/0(0) 9.02.00 QTY:1 FL/-/4/-/-/R/- Scale =.1875"/Ft.

ALPINE
ITW Building Components Group Inc.
Haines City, FL 33844
FL C[illegible]78

WARNING TRUSSES REQUIRE EXTREME CARE IN FABRICATION, HANDLING, SHIPPING, INSTALLING AND BRACING. REFER TO BCSI (BUILDING COMPONENT SAFETY INFORMATION), PUBLISHED BY TPI (TRUSS PLATE INSTITUTE, 218 NORTH LEE STREET, SUITE 312, ALEXANDRIA, VA, 22314) AND WTCA (WOOD TRUSS COUNCIL OF AMERICA, 6300 ENTERPRISE LANE, MADISON, WI 53719) FOR SAFETY PRACTICES PRIOR TO PERFORMING THESE FUNCTIONS. UNLESS OTHERWISE INDICATED TOP CHORD SHALL HAVE PROPERLY ATTACHED STRUCTURAL PANELS AND BOTTOM CHORD SHALL HAVE A PROPERLY ATTACHED RIGID CEILING.

IMPORTANT FURNISH A COPY OF THIS DESIGN TO THE INSTALLATION CONTRACTOR. ITW BCG, INC. SHALL NOT BE RESPONSIBLE FOR ANY DEVIATION FROM THIS DESIGN; ANY FAILURE TO BUILD THE TRUSS IN CONFORMANCE WITH TPI; OR FABRICATING, HANDLING, SHIPPING, INSTALLING & BRACING OF TRUSSES. DESIGN CONFORMS WITH APPLICABLE PROVISIONS OF NDS (NATIONAL DESIGN SPEC. BY AF&PA) AND TPI. ITW BCG CONNECTOR PLATES ARE MADE OF 20/18/16GA (W,H/SS/K) ASTM A653 GRADE 40/60 (W, K/H,SS) GALV. STEEL. APPLY PLATES TO EACH FACE OF TRUSS AND, UNLESS OTHERWISE LOCATED ON THIS DESIGN, POSITION PER DRAWINGS 160A-Z. ANY INSPECTION OF PLATES FOLLOWED BY (I) SHALL BE PER ANNEX A3 OF TPI1-2002 SEC.3. A SEAL ON THIS DRAWING INDICATES ACCEPTANCE OF PROFESSIONAL ENGINEERING RESPONSIBILITY SOLELY FOR THE TRUSS COMPONENT DESIGN SHOWN. THE SUITABILITY AND USE OF THIS COMPONENT FOR ANY BUILDING IS THE RESPONSIBILITY OF THE BUILDING DESIGNER PER ANSI/TPI 1 SEC. 2.

DOUGLAS FLEMING LICENSE No. 66648 STATE OF FLORIDA PROFESSIONAL ENGINEER
[illegible] 20 '09

TC LL	20.0 PSF	REF R8228- 19889
TC DL	10.0 PSF	DATE 08/20/09
BC DL	10.0 PSF	DRW HCUSR8228 09232001
BC LL	0.0 PSF	HC-ENG KD/DF
TOT.LD.	40.0 PSF	SEQN- 66328
DUR.FAC.	1.25	FROM AH
SPACING	24.0"	JREF- 1TUD8228Z01

(9-070--Freeman Design Group Hudson -- , ** - H7B)

Top chord 2x4 SP #2 Dense
Bot chord 2x4 SP #2 Dense
Webs 2x4 SP #3
:Lt Wedge 2x4 SP #3::Rt Wedge 2x4 SP #3:

Roof overhang supports 2.00 psf soffit load.

#1 hip supports 7-0-0 jacks with no webs.

Deflection meets L/240 live and L/180 total load.

110 mph wind, 15.00 ft mean hgt, ASCE 7-05, CLOSED bldg, Located anywhere in roof, CAT II, EXP B, wind TC DL=5.0 psf, wind BC DL=5.0 psf. Iw=1.00 GCpi(+/-)=0.18

Wind reactions based on MWFRS pressures.

In lieu of structural panels use purlins to brace all flat TC @ 24" OC.

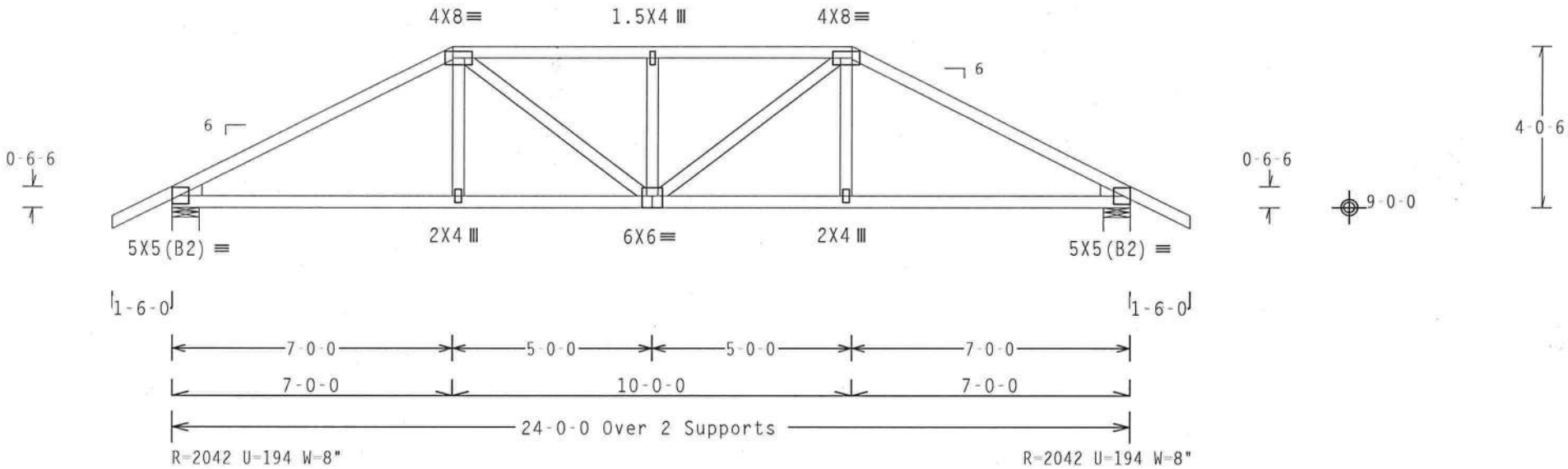

Design Crit: FBC2007Res/TPI-2002(STD)

PLT TYP. Wave | FT/RT=10%(0%)/0(0) | 8.07.00 | QTY:2 | FL/-/4/-/-/R/- | Scale =.25"/Ft.

ALPINE
ITW Building Components Group Inc.
Haines City, FL 33844
FL C[illegible]278

WARNING TRUSSES REQUIRE EXTREME CARE IN FABRICATION, HANDLING, SHIPPING, INSTALLING AND BRACING. REFER TO BCSI (BUILDING COMPONENT SAFETY INFORMATION), PUBLISHED BY TPI (TRUSS PLATE INSTITUTE, 218 NORTH LEE STREET, SUITE 312, ALEXANDRIA, VA. 22314) AND WTCA (WOOD TRUSS COUNCIL OF AMERICA, 6300 ENTERPRISE LANE, MADISON, WI 53719) FOR SAFETY PRACTICES PRIOR TO PERFORMING THESE FUNCTIONS. UNLESS OTHERWISE INDICATED TOP CHORD SHALL HAVE PROPERLY ATTACHED STRUCTURAL PANELS AND BOTTOM CHORD SHALL HAVE A PROPERLY ATTACHED RIGID CEILING.

IMPORTANT FURNISH A COPY OF THIS DESIGN TO THE INSTALLATION CONTRACTOR. ITW BCG, INC. SHALL NOT BE RESPONSIBLE FOR ANY DEVIATION FROM THIS DESIGN; ANY FAILURE TO BUILD THE TRUSS IN CONFORMANCE WITH TPI; OR FABRICATING, HANDLING, SHIPPING, INSTALLING & BRACING OF TRUSSES. DESIGN CONFORMS WITH APPLICABLE PROVISIONS OF NDS (NATIONAL DESIGN SPEC, BY AF&PA) AND TPI. ITW BCG CONNECTOR PLATES ARE MADE OF 20/18/16GA (W,H/SS/K) ASTM A653 GRADE 40/60 (W, K/H,SS) GALV. STEEL. APPLY PLATES TO EACH FACE OF TRUSS AND, UNLESS OTHERWISE LOCATED ON THIS DESIGN, POSITION PER DRAWINGS 160A-Z. ANY INSPECTION OF PLATES FOLLOWED BY (1) SHALL BE PER ANNEX A3 OF TPI1-2002 SEC.3. A SEAL ON THIS DRAWING INDICATES ACCEPTANCE OF PROFESSIONAL ENGINEERING RESPONSIBILITY SOLELY FOR THE TRUSS COMPONENT DESIGN SHOWN. THE SUITABILITY AND USE OF THIS COMPONENT FOR ANY BUILDING IS THE RESPONSIBILITY OF THE BUILDING DESIGNER PER ANSI/TPI 1 SEC. 2.

DOUGLAS FLEMING LICENSE No. 66648 STATE OF FLORIDA PROFESSIONAL ENGINEER
Aug 20 '09

TC LL	20.0 PSF	REF	R8228- 19890
TC DL	10.0 PSF	DATE	08/20/09
BC DL	10.0 PSF	DRW	HCUSR8228 09232014
BC LL	0.0 PSF	HC-ENG	DF/DF
TOT.LD.	40.0 PSF	SEQN-	9236
DUR.FAC.	1.25	FROM	AH
SPACING	SEE ABOVE	JREF-	1TUD8228Z01

(9-070--Freeman Design Group Hudson -- , ** - H9B)

Top chord 2x4 SP #2 Dense
Bot chord 2x4 SP #2 Dense
Webs 2x4 SP #3

Roof overhang supports 2.00 psf soffit load.

In lieu of structural panels use purlins to brace all flat TC @ 24" OC.

110 mph wind, 15.00 ft mean hgt, ASCE 7-05, CLOSED bldg, not located within 4.50 ft from roof edge, CAT II, EXP B, wind TC DL=5.0 psf, wind BC DL=5.0 psf. Iw=1.00 GCpi(+/-)=0.18

Wind reactions based on MWFRS pressures.

Bottom chord checked for 10.00 psf non-concurrent live load.

Deflection meets L/240 live and L/180 total load.

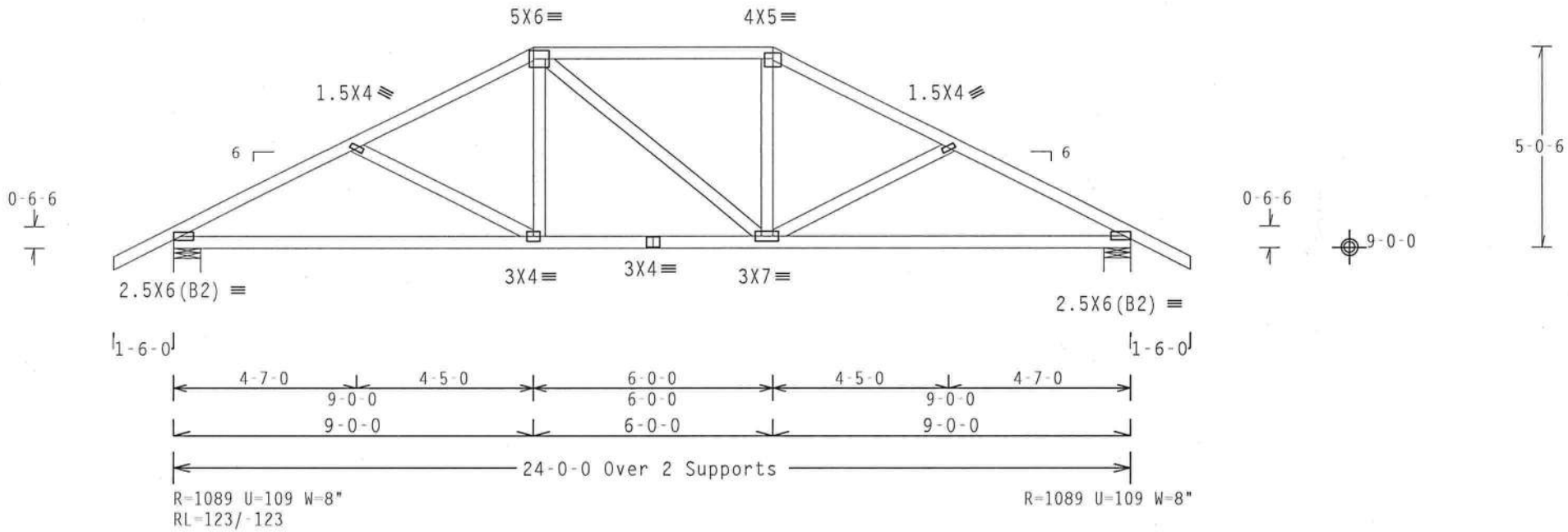

Design Crit: FBC2007Res/TPI-2002(STD)

PLT TYP. Wave | FT/RT=10%(0%)/0(0) | 8.07.00 | QTY:2 | FL/-/4/-/-/R/- | Scale =.25"/Ft.

ALPINE
ITW Building Components Group Inc.
Haines City, FL 33844
FL COA #0-278

WARNING TRUSSES REQUIRE EXTREME CARE IN FABRICATION, HANDLING, SHIPPING, INSTALLING AND BRACING. REFER TO BCSI (BUILDING COMPONENT SAFETY INFORMATION), PUBLISHED BY TPI (TRUSS PLATE INSTITUTE, 218 NORTH LEE STREET, SUITE 312, ALEXANDRIA, VA. 22314) AND WTCA (WOOD TRUSS COUNCIL OF AMERICA, 6300 ENTERPRISE LANE, MADISON, WI 53719) FOR SAFETY PRACTICES PRIOR TO PERFORMING THESE FUNCTIONS. UNLESS OTHERWISE INDICATED TOP CHORD SHALL HAVE PROPERLY ATTACHED STRUCTURAL PANELS AND BOTTOM CHORD SHALL HAVE A PROPERLY ATTACHED RIGID CEILING.

IMPORTANT FURNISH A COPY OF THIS DESIGN TO THE INSTALLATION CONTRACTOR. ITW BCG, INC. SHALL NOT BE RESPONSIBLE FOR ANY DEVIATION FROM THIS DESIGN; ANY FAILURE TO BUILD THE TRUSS IN CONFORMANCE WITH TPI; OR FABRICATING, HANDLING, SHIPPING, INSTALLING & BRACING OF TRUSSES. DESIGN CONFORMS WITH APPLICABLE PROVISIONS OF NDS (NATIONAL DESIGN SPEC. BY AF&PA) AND TPI. ITW BCG CONNECTOR PLATES ARE MADE OF 20/18/16GA (W,H/SS/K) ASTM A653 GRADE 40/60 (W, K/H,SS) GALV. STEEL. APPLY PLATES TO EACH FACE OF TRUSS AND, UNLESS OTHERWISE LOCATED ON THIS DESIGN, POSITION PER DRAWINGS 160A-Z. ANY INSPECTION OF PLATES FOLLOWED BY (1) SHALL BE PER ANNEX A3 OF TPI1-2002 SEC.3. A SEAL ON THIS DRAWING INDICATES ACCEPTANCE OF PROFESSIONAL ENGINEERING RESPONSIBILITY SOLELY FOR THE TRUSS COMPONENT DESIGN SHOWN. THE SUITABILITY AND USE OF THIS COMPONENT FOR ANY BUILDING IS THE RESPONSIBILITY OF THE BUILDING DESIGNER PER ANSI/TPI 1 SEC. 2.

DOUGLAS FLEMING LICENSE No. 66648 STATE OF FLORIDA PROFESSIONAL ENGINEER
Aug 20 '09

TC LL	20.0 PSF	REF	R8228- 19891
TC DL	10.0 PSF	DATE	08/20/09
BC DL	10.0 PSF	DRW	HCUSR8228 09232040
BC LL	0.0 PSF	HC-ENG	DF/DF *
TOT.LD.	40.0 PSF	SEQN-	9240
DUR.FAC.	1.25	FROM	AH
SPACING	24.0"	JREF-	1TUD8228Z01

(9-070--Freeman Design Group Hudson -- , ** - H11B)

Top chord 2x4 SP #2 Dense
Bot chord 2x4 SP #2 Dense
Webs 2x4 SP #3

Roof overhang supports 2.00 psf soffit load.

In lieu of structural panels use purlins to brace all flat TC @ 24" OC.

110 mph wind, 15.00 ft mean hgt, ASCE 7-05, CLOSED bldg, not located within 4.50 ft from roof edge, CAT II, EXP B, wind TC DL=5.0 psf, wind BC DL=5.0 psf. Iw=1.00 GCpi(+/-)=0.18

Wind reactions based on MWFRS pressures.

Bottom chord checked for 10.00 psf non-concurrent live load.

Deflection meets L/240 live and L/180 total load.

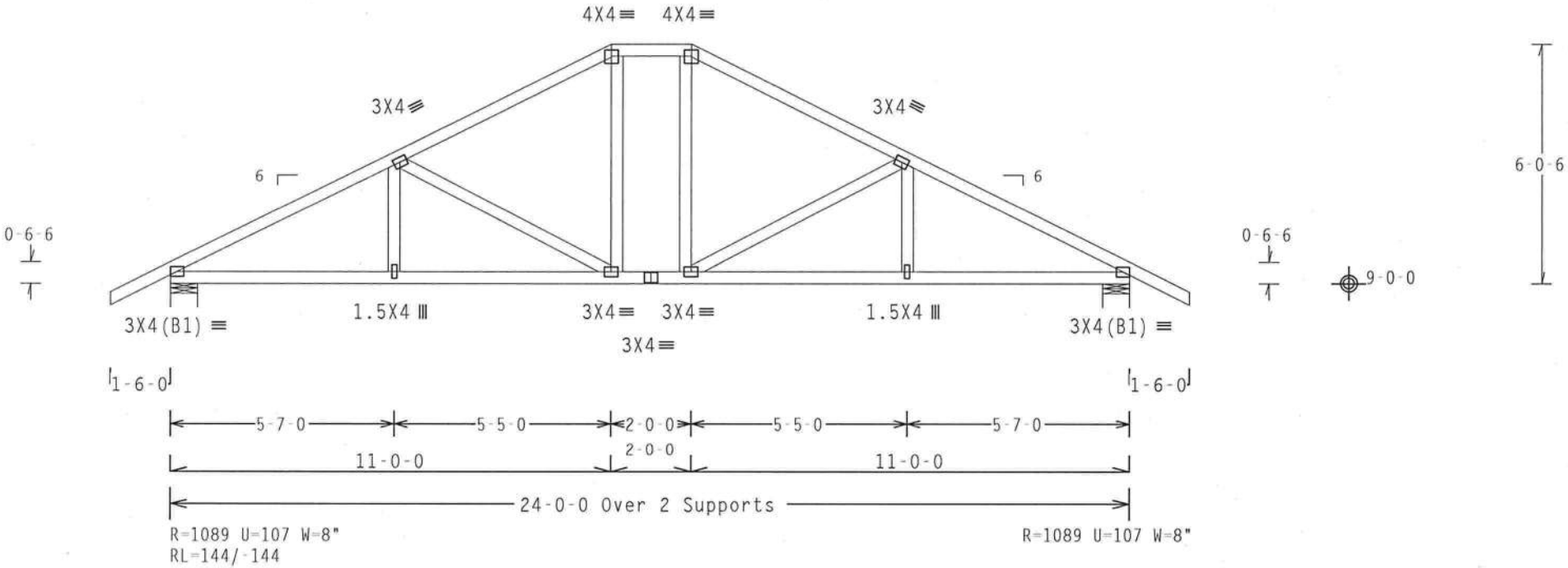

Design Crit: FBC2007Res/TPI-2002(STD)

PLT TYP. Wave | FT/RT=10%(0%)/0(0) | 8.07.00 | QTY:2 | FL/-/4/-/-/R/- | Scale =.25"/Ft.

ALPINE
ITW Building Components Group Inc.
Haines City, FL 33844
FL C[illegible]78

WARNING TRUSSES REQUIRE EXTREME CARE IN FABRICATION, HANDLING, SHIPPING, INSTALLING AND BRACING. REFER TO BCSI (BUILDING COMPONENT SAFETY INFORMATION), PUBLISHED BY TPI (TRUSS PLATE INSTITUTE, 218 NORTH LEE STREET, SUITE 312, ALEXANDRIA, VA, 22314) AND WTCA (WOOD TRUSS COUNCIL OF AMERICA, 6300 ENTERPRISE LANE, MADISON, WI 53719) FOR SAFETY PRACTICES PRIOR TO PERFORMING THESE FUNCTIONS. UNLESS OTHERWISE INDICATED TOP CHORD SHALL HAVE PROPERLY ATTACHED STRUCTURAL PANELS AND BOTTOM CHORD SHALL HAVE A PROPERLY ATTACHED RIGID CEILING.

IMPORTANT FURNISH A COPY OF THIS DESIGN TO THE INSTALLATION CONTRACTOR. ITW BCG, INC. SHALL NOT BE RESPONSIBLE FOR ANY DEVIATION FROM THIS DESIGN; ANY FAILURE TO BUILD THE TRUSS IN CONFORMANCE WITH TPI; OR FABRICATING, HANDLING, SHIPPING, INSTALLING & BRACING OF TRUSSES. DESIGN CONFORMS WITH APPLICABLE PROVISIONS OF NDS (NATIONAL DESIGN SPEC, BY AF&PA) AND TPI. ITW BCG CONNECTOR PLATES ARE MADE OF 20/18/16GA (W,H/SS/K) ASTM A653 GRADE 40/60 (W, K/H,SS) GALV. STEEL. APPLY PLATES TO EACH FACE OF TRUSS AND, UNLESS OTHERWISE LOCATED ON THIS DESIGN, POSITION PER DRAWINGS 160A-Z. ANY INSPECTION OF PLATES FOLLOWED BY (1) SHALL BE PER ANNEX A3 OF TPI1-2002 SEC.3. A SEAL ON THIS DRAWING INDICATES ACCEPTANCE OF PROFESSIONAL ENGINEERING RESPONSIBILITY SOLELY FOR THE TRUSS COMPONENT DESIGN SHOWN. THE SUITABILITY AND USE OF THIS COMPONENT FOR ANY BUILDING IS THE RESPONSIBILITY OF THE BUILDING DESIGNER PER ANSI/TPI 1 SEC. 2.

DOUGLAS FLEMING LICENSE No. 66648 STATE OF FLORIDA PROFESSIONAL ENGINEER
[illegible] 9 20 '09

TC LL	20.0 PSF	REF	R8228- 19892
TC DL	10.0 PSF	DATE	08/20/09
BC DL	10.0 PSF	DRW	HCUSR8228 09232042
BC LL	0.0 PSF	HC-ENG	DF/DF *
TOT.LD.	40.0 PSF	SEQN-	9246
DUR.FAC.	1.25	FROM	AH
SPACING	24.0"	JREF-	1TUD8228Z01

(9-070--Freeman Design Group Hudson -- , ** - C2-GDR)

Top chord 2x4 SP #2 Dense
Bot chord 2x6 SP #2
Webs 2x4 SP #3

110 mph wind, 15.00 ft mean hgt, ASCE 7-05, CLOSED bldg, not located within 4.50 ft from roof edge, CAT II, EXP B, wind TC DL=5.0 psf, wind BC DL=5.0 psf. Iw=1.00 GCpi(+/-)=0.18

Wind reactions based on MWFRS pressures.

Roof overhang supports 2.00 psf soffit load.

SPECIAL LOADS
------(LUMBER DUR.FAC.=1.25 / PLATE DUR.FAC.=1.25)

TC - From	62 PLF	at	-1.50	to	62 PLF	at	4.15
TC - From	62 PLF	at	4.15	to	62 PLF	at	8.29
BC - From	4 PLF	at	-1.50	to	4 PLF	at	0.00
BC - From	20 PLF	at	0.00	to	20 PLF	at	8.29
BC -	45 LB Conc. Load	at	1.09				
BC -	127 LB Conc. Load	at	3.09				
BC -	209 LB Conc. Load	at	5.09				
BC -	292 LB Conc. Load	at	7.06				

Deflection meets L/240 live and L/180 total load.

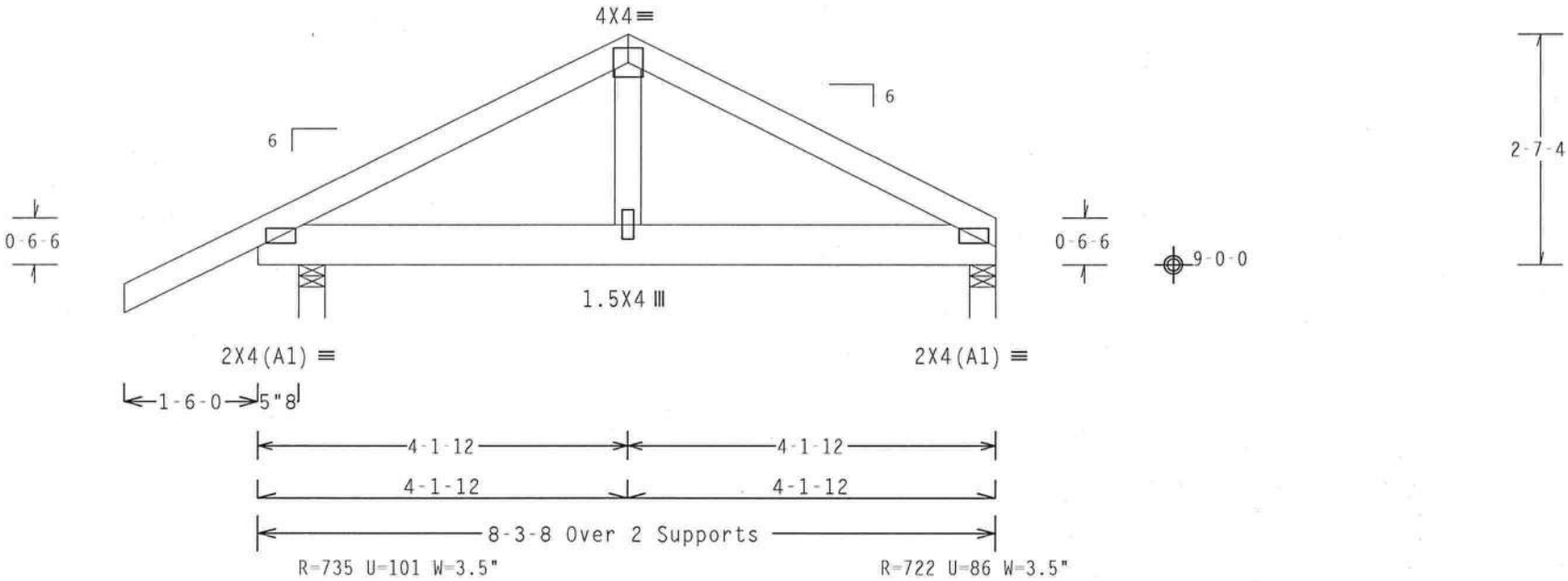

Design Crit: FBC2007Res/TPI-2002(STD)

PLT TYP. Wave FT/RT=10%(0%)/0(0) 8.07.00 QTY:1 FL/-/4/-/-/R/- Scale =.5"/Ft.

ALPINE
ITW Building Components Group Inc.
Haines City, FL 33844
FL CO

WARNING TRUSSES REQUIRE EXTREME CARE IN FABRICATION, HANDLING, SHIPPING, INSTALLING AND BRACING. REFER TO BCSI (BUILDING COMPONENT SAFETY INFORMATION), PUBLISHED BY TPI (TRUSS PLATE INSTITUTE, 218 NORTH LEE STREET, SUITE 312, ALEXANDRIA, VA, 22314) AND WTCA (WOOD TRUSS COUNCIL OF AMERICA, 6300 ENTERPRISE LANE, MADISON, WI 53719) FOR SAFETY PRACTICES PRIOR TO PERFORMING THESE FUNCTIONS. UNLESS OTHERWISE INDICATED TOP CHORD SHALL HAVE PROPERLY ATTACHED STRUCTURAL PANELS AND BOTTOM CHORD SHALL HAVE A PROPERLY ATTACHED RIGID CEILING.

IMPORTANTFURNISH A COPY OF THIS DESIGN TO THE INSTALLATION CONTRACTOR. ITW BCG, INC. SHALL NOT BE RESPONSIBLE FOR ANY DEVIATION FROM THIS DESIGN; ANY FAILURE TO BUILD THE TRUSS IN CONFORMANCE WITH TPI; OR FABRICATING, HANDLING, SHIPPING, INSTALLING & BRACING OF TRUSSES.
DESIGN CONFORMS WITH APPLICABLE PROVISIONS OF NDS (NATIONAL DESIGN SPEC, BY AF&PA) AND TPI. ITW BCG CONNECTOR PLATES ARE MADE OF 20/18/16GA (W,H/SS/K) ASTM A653 GRADE 40/60 (W, K/H,SS) GALV. STEEL. APPLY PLATES TO EACH FACE OF TRUSS AND, UNLESS OTHERWISE LOCATED ON THIS DESIGN, POSITION PER DRAWINGS 160A-Z. ANY INSPECTION OF PLATES FOLLOWED BY (1) SHALL BE PER ANNEX A3 OF TPI1-2002 SEC.3. A SEAL ON THIS DRAWING INDICATES ACCEPTANCE OF PROFESSIONAL ENGINEERING RESPONSIBILITY SOLELY FOR THE TRUSS COMPONENT DESIGN SHOWN. THE SUITABILITY AND USE OF THIS COMPONENT FOR ANY BUILDING IS THE RESPONSIBILITY OF THE BUILDING DESIGNER PER ANSI/TPI 1 SEC. 2.

DOUGLAS FLEMING LICENSE No. 66648 STATE OF FLORIDA PROFESSIONAL ENGINEER
20 '09

TC LL	20.0 PSF	REF	R8228- 19893
TC DL	10.0 PSF	DATE	08/20/09
BC DL	10.0 PSF	DRW	HCUSR8228 09232020
BC LL	0.0 PSF	HC-ENG	DF/DF
TOT.LD.	40.0 PSF	SEQN-	9336
DUR.FAC.	1.25	FROM	AH
SPACING	24.0"	JREF-	1TUD8228Z01

(9-070--Freeman Design Group Hudson -- , ** - C1)

Top chord 2x4 SP #2 Dense
Bot chord 2x4 SP #2 Dense
Webs 2x4 SP #3

Roof overhang supports 2.00 psf soffit load.

Bottom chord checked for 10.00 psf non-concurrent live load.

110 mph wind, 15.00 ft mean hgt, ASCE 7-05, PART._ENC. bldg, not located within 4.50 ft from roof edge, CAT II, EXP B, wind TC DL=5.0 psf, wind BC DL=5.0 psf. Iw=1.00 GCpi(+/-)=0.55

Wind reactions based on MWFRS pressures.

Deflection meets L/240 live and L/180 total load.

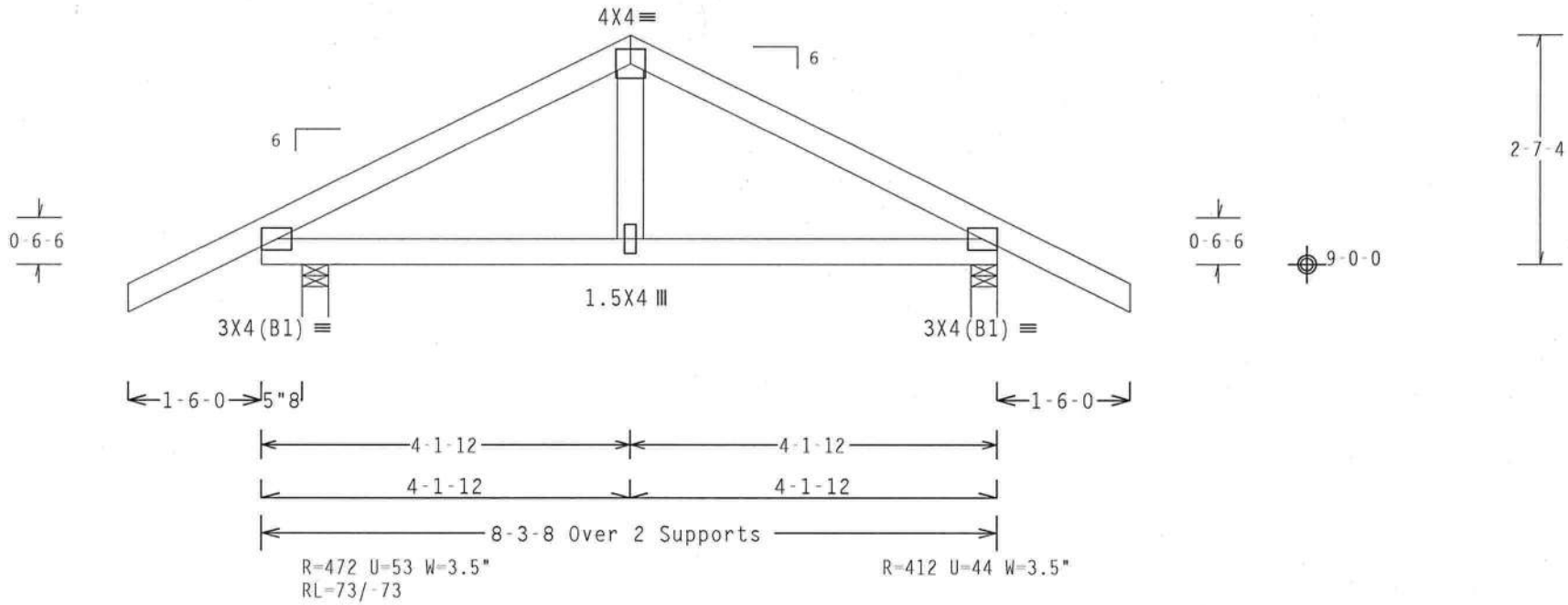

Design Crit: FBC2007Res/TPI-2002(STD)

PLT TYP. Wave | FT/RT=10%(0%)/0(0) | 8.07.00 | QTY:5 | FL/-/4/-/-/R/- | Scale =.5"/Ft.

ALPINE
ITW Building Components Group Inc.
Haines City, FL 33844
FL C[illegible]278

WARNING TRUSSES REQUIRE EXTREME CARE IN FABRICATION, HANDLING, SHIPPING, INSTALLING AND BRACING. REFER TO BCSI (BUILDING COMPONENT SAFETY INFORMATION), PUBLISHED BY TPI (TRUSS PLATE INSTITUTE, 218 NORTH LEE STREET, SUITE 312, ALEXANDRIA, VA, 22314) AND WTCA (WOOD TRUSS COUNCIL OF AMERICA, 6300 ENTERPRISE LANE, MADISON, WI 53719) FOR SAFETY PRACTICES PRIOR TO PERFORMING THESE FUNCTIONS. UNLESS OTHERWISE INDICATED TOP CHORD SHALL HAVE PROPERLY ATTACHED STRUCTURAL PANELS AND BOTTOM CHORD SHALL HAVE A PROPERLY ATTACHED RIGID CEILING.

IMPORTANT FURNISH A COPY OF THIS DESIGN TO THE INSTALLATION CONTRACTOR. ITW BCG, INC. SHALL NOT BE RESPONSIBLE FOR ANY DEVIATION FROM THIS DESIGN; ANY FAILURE TO BUILD THE TRUSS IN COMFORMANCE WITH TPI; OR FABRICATING, HANDLING, SHIPPING, INSTALLING & BRACING OF TRUSSES.
DESIGN CONFORMS WITH APPLICABLE PROVISIONS OF NDS (NATIONAL DESIGN SPEC, BY AF&PA) AND TPI. ITW BCG CONNECTOR PLATES ARE MADE OF 20/18/16GA (W,H/SS/K) ASTM A653 GRADE 40/60 (W, K/H,SS) GALV. STEEL. APPLY PLATES TO EACH FACE OF TRUSS AND, UNLESS OTHERWISE LOCATED ON THIS DESIGN, POSITION PER DRAWINGS 160A-2. ANY INSPECTION OF PLATES FOLLOWED BY (1) SHALL BE PER ANNEX A3 OF TPI1-2002 SEC.3. A SEAL ON THIS DRAWING INDICATES ACCEPTANCE OF PROFESSIONAL ENGINEERING RESPONSIBILITY SOLELY FOR THE TRUSS COMPONENT DESIGN SHOWN. THE SUITABILITY AND USE OF THIS COMPONENT FOR ANY BUILDING IS THE RESPONSIBILITY OF THE BUILDING DESIGNER PER ANSI/TPI 1 SEC. 2.

DOUGLAS FLEMING LICENSE No. 66648 STATE OF FLORIDA PROFESSIONAL ENGINEER [illegible]20 '09

TC LL	20.0 PSF	REF	R8228- 19894
TC DL	10.0 PSF	DATE	08/20/09
BC DL	10.0 PSF	DRW	HCUSR8228 09232012
BC LL	0.0 PSF	HC-ENG	DF/DF *
TOT.LD.	40.0 PSF	SEQN-	9333
DUR.FAC.	1.25	FROM	AH
SPACING	24.0"	JREF-	1TUD8228Z01

(9-070--Freeman Design Group Hudson -- , ** - J1)

Top chord 2x4 SP #2 Dense
Bot chord 2x4 SP #2 Dense

Roof overhang supports 2.00 psf soffit load.

Bottom chord checked for 10.00 psf non-concurrent live load.

110 mph wind, 15.00 ft mean hgt, ASCE 7-05, CLOSED bldg, Located anywhere in roof, CAT II, EXP B, wind TC DL=5.0 psf, wind BC DL=5.0 psf. Iw=1.00 GCpi(+/-)=0.18

Wind reactions based on MWFRS pressures.

Deflection meets L/240 live and L/180 total load.

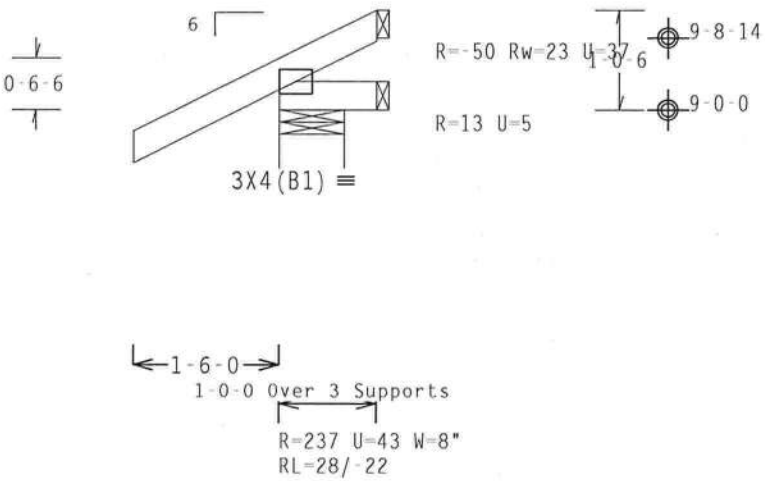

Design Crit: FBC2007Res/TPI-2002(STD)

PLT TYP. Wave FT/RT=10%(0%)/0(0) 8.07.00.1[illegible] QTY:8 FL/-/4/-/-/R/- Scale =.5"/Ft.

ALPINE
ITW Building Components Group Inc.
Haines City, FL 33844
FL CO[illegible]278

WARNING TRUSSES REQUIRE EXTREME CARE IN FABRICATION, HANDLING, SHIPPING, INSTALLING AND BRACING. REFER TO BCSI (BUILDING COMPONENT SAFETY INFORMATION), PUBLISHED BY TPI (TRUSS PLATE INSTITUTE, 218 NORTH LEE STREET, SUITE 312, ALEXANDRIA, VA, 22314) AND WTCA (WOOD TRUSS COUNCIL OF AMERICA, 6300 ENTERPRISE LANE, MADISON, WI 53719) FOR SAFETY PRACTICES PRIOR TO PERFORMING THESE FUNCTIONS. UNLESS OTHERWISE INDICATED TOP CHORD SHALL HAVE PROPERLY ATTACHED STRUCTURAL PANELS AND BOTTOM CHORD SHALL HAVE A PROPERLY ATTACHED RIGID CEILING.

IMPORTANTFURNISH A COPY OF THIS DESIGN TO THE INSTALLATION CONTRACTOR. ITW BCG, INC. SHALL NOT BE RESPONSIBLE FOR ANY DEVIATION FROM THIS DESIGN; ANY FAILURE TO BUILD THE TRUSS IN CONFORMANCE WITH TPI; OR FABRICATING, HANDLING, SHIPPING, INSTALLING & BRACING OF TRUSSES.
DESIGN CONFORMS WITH APPLICABLE PROVISIONS OF NDS (NATIONAL DESIGN SPEC. BY AF&PA) AND TPI. ITW BCG CONNECTOR PLATES ARE MADE OF 20/18/16GA (W,H/SS/K) ASTM A653 GRADE 40/60 (W, K/H,SS) GALV. STEEL. APPLY PLATES TO EACH FACE OF TRUSS AND, UNLESS OTHERWISE LOCATED ON THIS DESIGN, POSITION PER DRAWINGS 160A-Z. ANY INSPECTION OF PLATES FOLLOWED BY (1) SHALL BE PER ANNEX A3 OF TPI1-2002 SEC.3. A SEAL ON THIS DRAWING INDICATES ACCEPTANCE OF PROFESSIONAL ENGINEERING RESPONSIBILITY SOLELY FOR THE TRUSS COMPONENT DESIGN SHOWN. THE SUITABILITY AND USE OF THIS COMPONENT FOR ANY BUILDING IS THE RESPONSIBILITY OF THE BUILDING DESIGNER PER ANSI/TPI 1 SEC. 2.

DOUGLAS FLEMING LICENSE No. 66648 STATE OF FLORIDA PROFESSIONAL ENGINEER
[illegible]20 '09

TC LL	20.0 PSF	REF R8228- 19895
TC DL	10.0 PSF	DATE 08/20/09
BC DL	10.0 PSF	DRW HCUSR8228 09232046
BC LL	0.0 PSF	HC-ENG DF/DF
TOT.LD.	40.0 PSF	SEQN- 9208
DUR.FAC.	1.25	FROM AH
SPACING	24.0"	JREF- 1TUD8228Z01

(9-070--Freeman Design Group Hudson -- , ** - HJ7)

Top chord 2x4 SP #2 Dense
Bot chord 2x4 SP #2 Dense
Webs 2x4 SP #3

Hipjack supports 7-0-0 setback jacks with no webs.

Deflection meets L/240 live and L/180 total load.

110 mph wind, 15.00 ft mean hgt, ASCE 7-05, CLOSED bldg, Located anywhere in roof, CAT II, EXP B, wind TC DL=5.0 psf, wind BC DL=5.0 psf. Iw=1.00 GCpi(+/-)=0.18

Wind reactions based on MWFRS pressures.

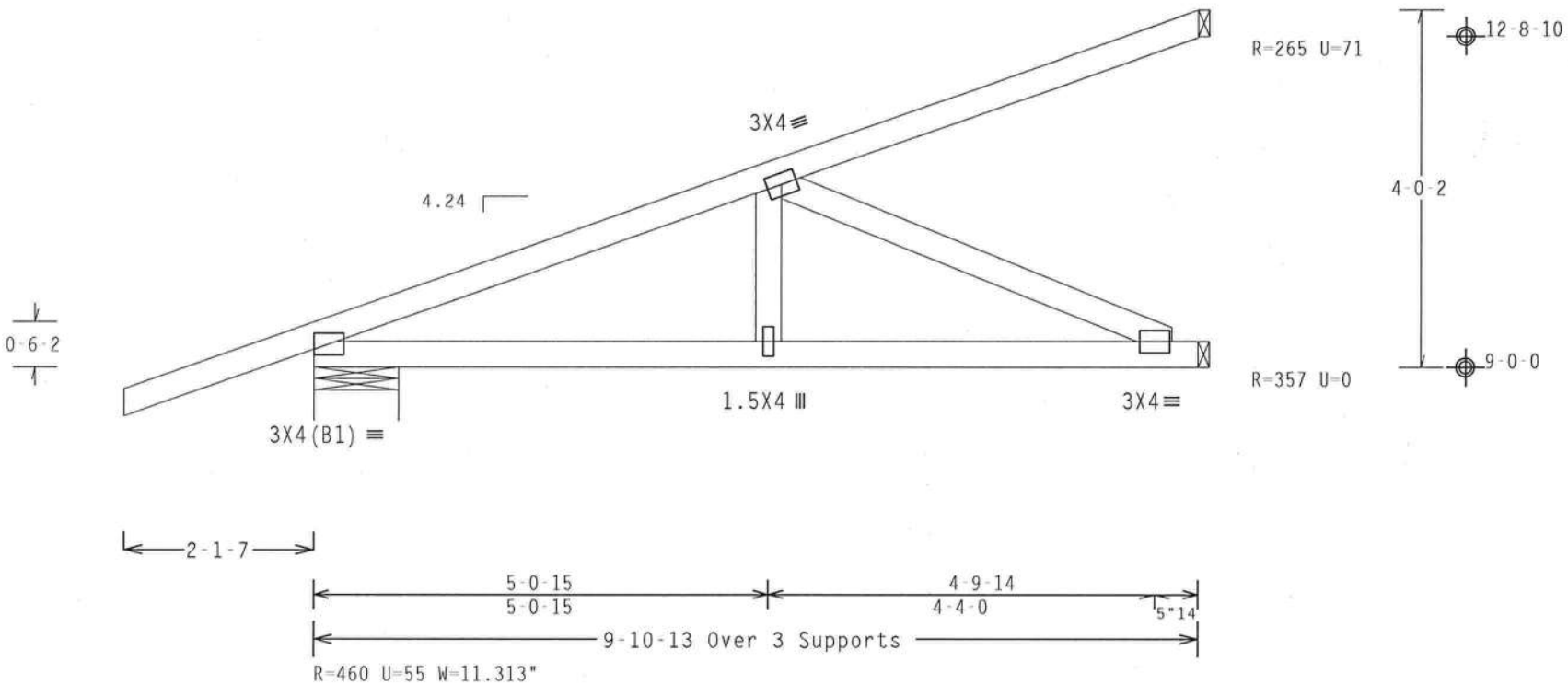

Design Crit: FBC2007Res/TPI-2002(STD)

PLT TYP. Wave | FT/RT=10%(0%)/0(0) | 8.07.00 | QTY:4 | FL/-/4/-/-/R/- | Scale =.5"/Ft.

ALPINE
ITW Building Components Group Inc.
Haines City, FL 33844
FL C[illegible]278

WARNING TRUSSES REQUIRE EXTREME CARE IN FABRICATION, HANDLING, SHIPPING, INSTALLING AND BRACING. REFER TO BCSI (BUILDING COMPONENT SAFETY INFORMATION), PUBLISHED BY TPI (TRUSS PLATE INSTITUTE, 218 NORTH LEE STREET, SUITE 312, ALEXANDRIA, VA, 22314) AND WTCA (WOOD TRUSS COUNCIL OF AMERICA, 6300 ENTERPRISE LANE, MADISON, WI 53719) FOR SAFETY PRACTICES PRIOR TO PERFORMING THESE FUNCTIONS. UNLESS OTHERWISE INDICATED TOP CHORD SHALL HAVE PROPERLY ATTACHED STRUCTURAL PANELS AND BOTTOM CHORD SHALL HAVE A PROPERLY ATTACHED RIGID CEILING.

IMPORTANT FURNISH A COPY OF THIS DESIGN TO THE INSTALLATION CONTRACTOR. ITW BCG, INC. SHALL NOT BE RESPONSIBLE FOR ANY DEVIATION FROM THIS DESIGN; ANY FAILURE TO BUILD THE TRUSS IN CONFORMANCE WITH TPI; OR FABRICATING, HANDLING, SHIPPING, INSTALLING & BRACING OF TRUSSES. DESIGN CONFORMS WITH APPLICABLE PROVISIONS OF NDS (NATIONAL DESIGN SPEC. BY AF&PA) AND TPI. ITW BCG CONNECTOR PLATES ARE MADE OF 20/18/16GA (W.H/SS/K) ASTM A653 GRADE 40/60 (W. K/H.SS) GALV. STEEL. APPLY PLATES TO EACH FACE OF TRUSS AND, UNLESS OTHERWISE LOCATED ON THIS DESIGN, POSITION PER DRAWINGS 160A-Z. ANY INSPECTION OF PLATES FOLLOWED BY (1) SHALL BE PER ANNEX A3 OF TPI1-2002 SEC.3. A SEAL ON THIS DRAWING INDICATES ACCEPTANCE OF PROFESSIONAL ENGINEERING RESPONSIBILITY SOLELY FOR THE TRUSS COMPONENT DESIGN SHOWN. THE SUITABILITY AND USE OF THIS COMPONENT FOR ANY BUILDING IS THE RESPONSIBILITY OF THE BUILDING DESIGNER PER ANSI/TPI 1 SEC. 2.

DOUGLAS FLEMING LICENSE No. 66648 STATE OF FLORIDA PROFESSIONAL ENGINEER
[illegible] 9 20 '09

TC LL	20.0 PSF	REF	R8228- 19896
TC DL	10.0 PSF	DATE	08/20/09
BC DL	10.0 PSF	DRW	HCUSR8228 09232043
BC LL	0.0 PSF	HC-ENG	DF/DF
TOT.LD.	40.0 PSF	SEQN-	9218
DUR.FAC.	1.25	FROM	AH
SPACING	SEE ABOVE	JREF-	1TUD8228Z01

Top chord 2x4 SP #2 Dense
Bot chord 2x4 SP #2 Dense

Roof overhang supports 2.00 psf soffit load.

Bottom chord checked for 10.00 psf non-concurrent live load.

110 mph wind, 15.00 ft mean hgt, ASCE 7-05, CLOSED bldg, Located anywhere in roof, CAT II, EXP B, wind TC DL=5.0 psf, wind BC DL=5.0 psf. Iw=1.00 GCpi(+/-)=0.18

Wind reactions based on MWFRS pressures.

Deflection meets L/240 live and L/180 total load.

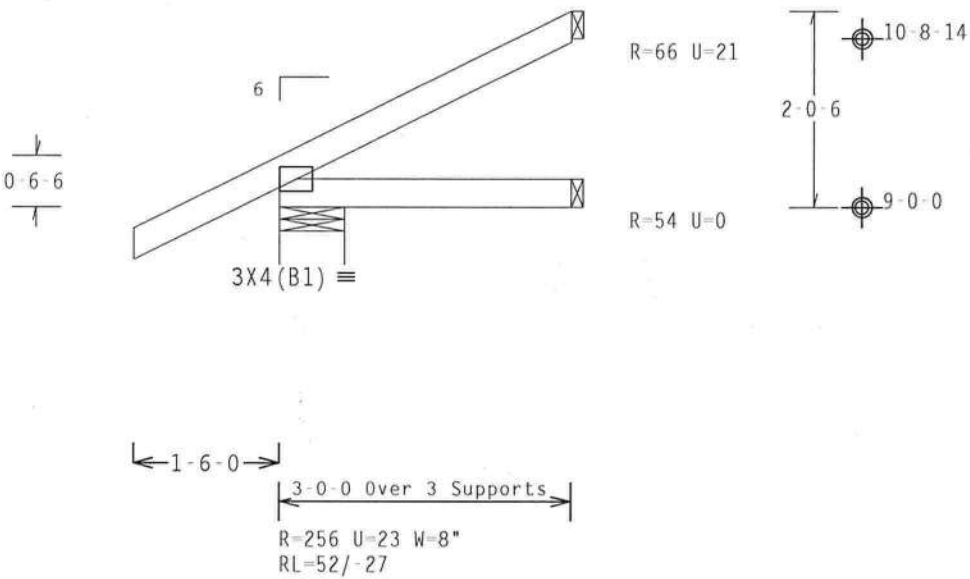

Design Crit: FBC2007Res/TPI-2002(STD)

PLT TYP. Wave | FT/RT=10%(0%)/0(0) | 8.07.00 | QTY:8 | FL/-/4/-/-/R/- | Scale =.5"/Ft.

ALPINE
ITW Building Components Group Inc.
Haines City, FL 33844
FL C[illegible]278

WARNING TRUSSES REQUIRE EXTREME CARE IN FABRICATION, HANDLING, SHIPPING, INSTALLING AND BRACING. REFER TO BCSI (BUILDING COMPONENT SAFETY INFORMATION), PUBLISHED BY TPI (TRUSS PLATE INSTITUTE, 218 NORTH LEE STREET, SUITE 312, ALEXANDRIA, VA, 22314) AND WTCA (WOOD TRUSS COUNCIL OF AMERICA, 6300 ENTERPRISE LANE, MADISON, WI 53719) FOR SAFETY PRACTICES PRIOR TO PERFORMING THESE FUNCTIONS. UNLESS OTHERWISE INDICATED TOP CHORD SHALL HAVE PROPERLY ATTACHED STRUCTURAL PANELS AND BOTTOM CHORD SHALL HAVE A PROPERLY ATTACHED RIGID CEILING.

IMPORTANTFURNISH A COPY OF THIS DESIGN TO THE INSTALLATION CONTRACTOR. ITW BCG, INC. SHALL NOT BE RESPONSIBLE FOR ANY DEVIATION FROM THIS DESIGN; ANY FAILURE TO BUILD THE TRUSS IN CONFORMANCE WITH TPI; OR FABRICATING, HANDLING, SHIPPING, INSTALLING & BRACING OF TRUSSES. DESIGN CONFORMS WITH APPLICABLE PROVISIONS OF NDS (NATIONAL DESIGN SPEC, BY AF&PA) AND TPI. ITW BCG CONNECTOR PLATES ARE MADE OF 20/18/16GA (W,H/SS/K) ASTM A653 GRADE 40/60 (W, K/H,SS) GALV. STEEL. APPLY PLATES TO EACH FACE OF TRUSS AND, UNLESS OTHERWISE LOCATED ON THIS DESIGN, POSITION PER DRAWINGS 160A-Z. ANY INSPECTION OF PLATES FOLLOWED BY (1) SHALL BE PER ANNEX A3 OF TPI1-2002 SEC.3. A SEAL ON THIS DRAWING INDICATES ACCEPTANCE OF PROFESSIONAL ENGINEERING RESPONSIBILITY SOLELY FOR THE TRUSS COMPONENT DESIGN SHOWN. THE SUITABILITY AND USE OF THIS COMPONENT FOR ANY BUILDING IS THE RESPONSIBILITY OF THE BUILDING DESIGNER PER ANSI/TPI 1 SEC. 2.

DOUGLAS FLEMING LICENSE No. 66648 STATE OF FLORIDA PROFESSIONAL ENGINEER
[illegible] 20 '09

TC LL	20.0 PSF	REF	R8228- 19897
TC DL	10.0 PSF	DATE	08/20/09
BC DL	10.0 PSF	DRW	HCUSR8228 09232045
BC LL	0.0 PSF	HC-ENG	DF/DF
TOT.LD.	40.0 PSF	SEQN-	9211
DUR.FAC.	1.25	FROM	AH
SPACING	24.0"	JREF-	1TUD8228Z01

(9-070--Freeman Design Group Hudson -- , ** - J5)

Top chord 2x4 SP #2 Dense
Bot chord 2x4 SP #2 Dense

Roof overhang supports 2.00 psf soffit load.

Bottom chord checked for 10.00 psf non-concurrent live load.

110 mph wind, 15.00 ft mean hgt, ASCE 7-05, CLOSED bldg, not located within 4.50 ft from roof edge, CAT II, EXP B, wind TC DL=5.0 psf, wind BC DL=5.0 psf. Iw=1.00 GCpi(+/-)=0.18

Wind reactions based on MWFRS pressures.

Deflection meets L/240 live and L/180 total load.

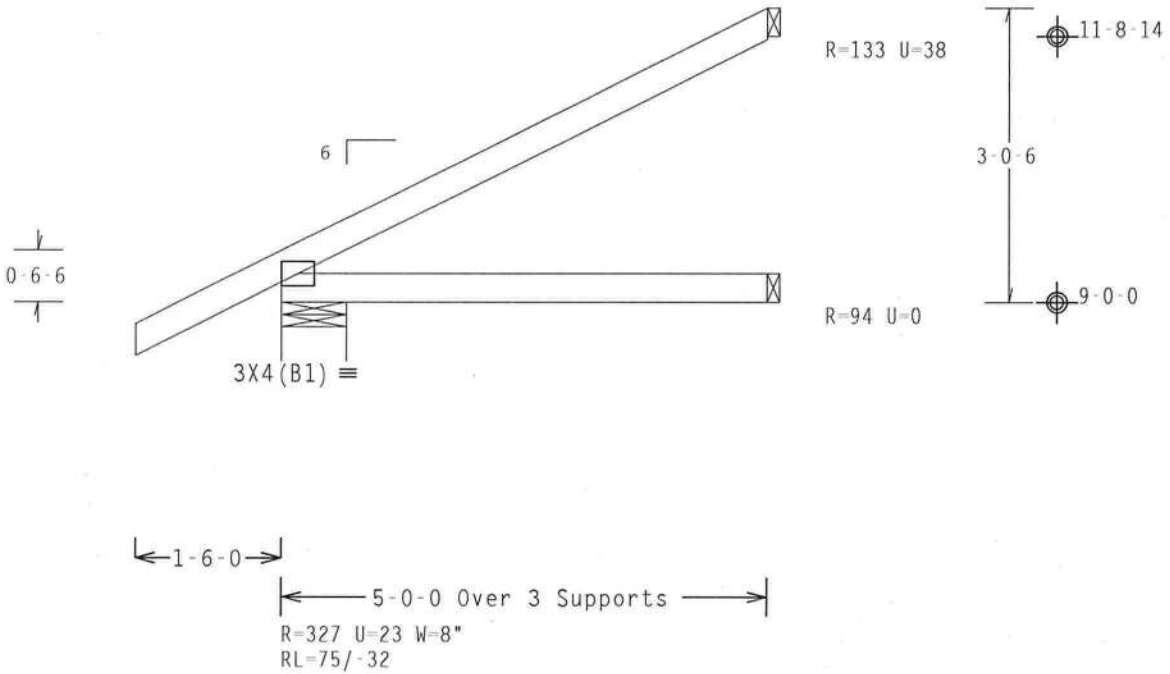

Design Crit: FBC2007Res/TPI-2002(STD)

PLT TYP. Wave FT/RT=10%(0%)/0(0) 8.07.0 QTY:8 FL/-/4/-/-/R/- Scale =.5"/Ft.

ALPINE
ITW Building Components Group Inc.
Haines City, FL 33844
FL C[illegible]78

WARNING TRUSSES REQUIRE EXTREME CARE IN FABRICATION, HANDLING, SHIPPING, INSTALLING AND BRACING. REFER TO BCSI (BUILDING COMPONENT SAFETY INFORMATION), PUBLISHED BY TPI (TRUSS PLATE INSTITUTE, 218 NORTH LEE STREET, SUITE 312, ALEXANDRIA, VA, 22314) AND WTCA (WOOD TRUSS COUNCIL OF AMERICA, 6300 ENTERPRISE LANE, MADISON, WI 53719) FOR SAFETY PRACTICES PRIOR TO PERFORMING THESE FUNCTIONS. UNLESS OTHERWISE INDICATED TOP CHORD SHALL HAVE PROPERLY ATTACHED STRUCTURAL PANELS AND BOTTOM CHORD SHALL HAVE A PROPERLY ATTACHED RIGID CEILING.

IMPORTANTFURNISH A COPY OF THIS DESIGN TO THE INSTALLATION CONTRACTOR. ITW BCG, INC. SHALL NOT BE RESPONSIBLE FOR ANY DEVIATION FROM THIS DESIGN; ANY FAILURE TO BUILD THE TRUSS IN CONFORMANCE WITH TPI; OR FABRICATING, HANDLING, SHIPPING, INSTALLING & BRACING OF TRUSSES. DESIGN CONFORMS WITH APPLICABLE PROVISIONS OF NDS (NATIONAL DESIGN SPEC. BY AF&PA) AND TPI. ITW BCG CONNECTOR PLATES ARE MADE OF 20/18/16GA (W,H/SS/K) ASTM A653 GRADE 40/60 (W, K/H,SS) GALV. STEEL. APPLY PLATES TO EACH FACE OF TRUSS AND, UNLESS OTHERWISE LOCATED ON THIS DESIGN, POSITION PER DRAWINGS 160A-Z. ANY INSPECTION OF PLATES FOLLOWED BY (1) SHALL BE PER ANNEX A3 OF TPI1-2002 SEC.3. A SEAL ON THIS DRAWING INDICATES ACCEPTANCE OF PROFESSIONAL ENGINEERING RESPONSIBILITY SOLELY FOR THE TRUSS COMPONENT DESIGN SHOWN. THE SUITABILITY AND USE OF THIS COMPONENT FOR ANY BUILDING IS THE RESPONSIBILITY OF THE BUILDING DESIGNER PER ANSI/TPI 1 SEC. 2.

DOUGLAS FLEMING LICENSE No. 66648 STATE OF FLORIDA PROFESSIONAL ENGINEER
[illegible]g 20 '09

TC LL	20.0 PSF	REF R8228- 19898
TC DL	10.0 PSF	DATE 08/20/09
BC DL	10.0 PSF	DRW HCUSR8228 09232044
BC LL	0.0 PSF	HC-ENG DF/DF
TOT.LD.	40.0 PSF	SEQN- 9214
DUR.FAC.	1.25	FROM AH
SPACING	24.0"	JREF- 1TUD8228Z01

(9-070--Freeman Design Group Hudson -- , ** - EJ7)

Top chord 2x4 SP #2 Dense
Bot chord 2x4 SP #2 Dense

Roof overhang supports 2.00 psf soffit load.

Bottom chord checked for 10.00 psf non-concurrent live load.

110 mph wind, 15.00 ft mean hgt, ASCE 7-05, CLOSED bldg, not located within 4.50 ft from roof edge, CAT II, EXP B, wind TC DL=5.0 psf, wind BC DL=5.0 psf. Iw=1.00 GCpi(+/-)=0.18

Wind reactions based on MWFRS pressures.

Deflection meets L/240 live and L/180 total load.

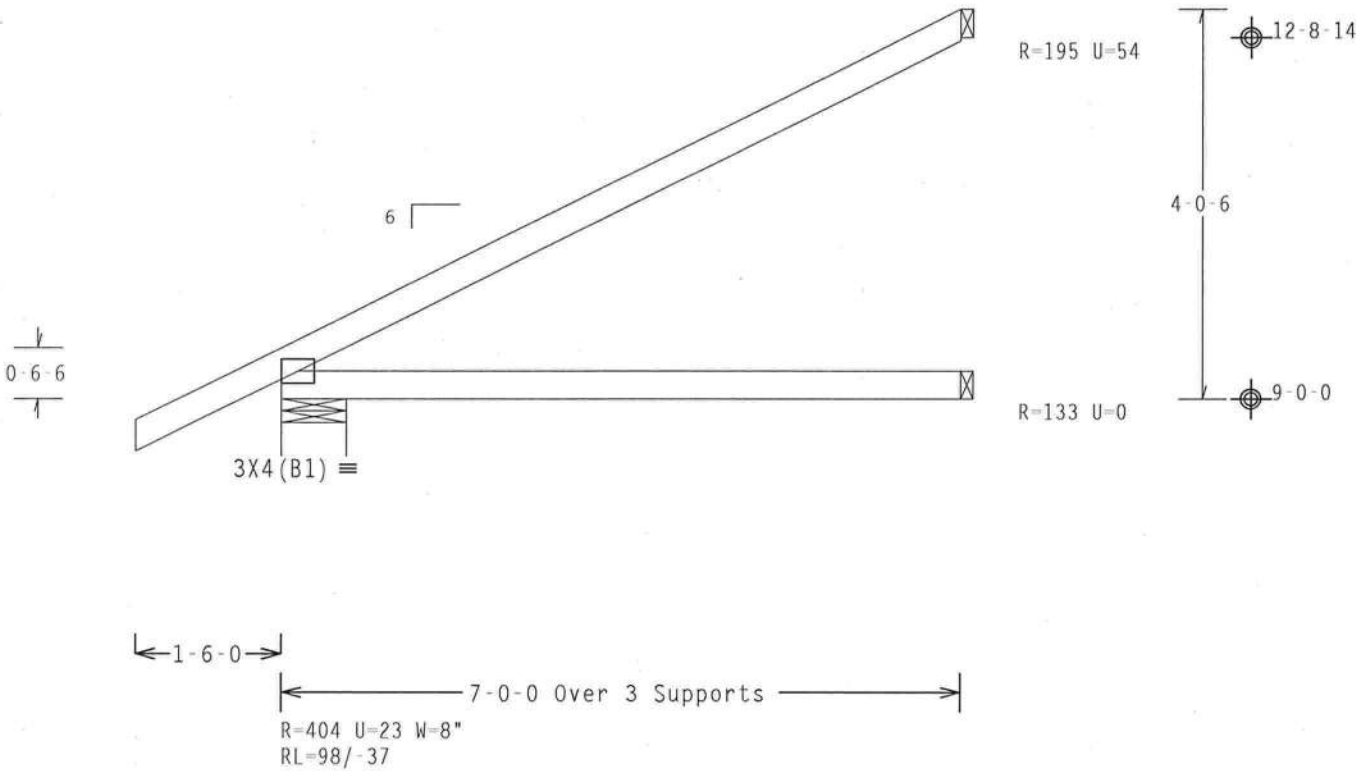

Design Crit: FBC2007Res/TPI-2002(STD)

PLT TYP. Wave FT/RT=10%(0%)/0(0) 8.07.00 QTY:41 FL/-/4/-/-/R/- Scale =.5"/Ft.

ALPINE
ITW Building Components Group Inc.
Haines City, FL 33844
FL C[illegible]078

WARNING TRUSSES REQUIRE EXTREME CARE IN FABRICATION, HANDLING, SHIPPING, INSTALLING AND BRACING. REFER TO BCSI (BUILDING COMPONENT SAFETY INFORMATION), PUBLISHED BY TPI (TRUSS PLATE INSTITUTE, 218 NORTH LEE STREET, SUITE 312, ALEXANDRIA, VA, 22314) AND WTCA (WOOD TRUSS COUNCIL OF AMERICA, 6300 ENTERPRISE LANE, MADISON, WI 53719) FOR SAFETY PRACTICES PRIOR TO PERFORMING THESE FUNCTIONS. UNLESS OTHERWISE INDICATED TOP CHORD SHALL HAVE PROPERLY ATTACHED STRUCTURAL PANELS AND BOTTOM CHORD SHALL HAVE A PROPERLY ATTACHED RIGID CEILING.

IMPORTANTFURNISH A COPY OF THIS DESIGN TO THE INSTALLATION CONTRACTOR. ITW BCG, INC. SHALL NOT BE RESPONSIBLE FOR ANY DEVIATION FROM THIS DESIGN; ANY FAILURE TO BUILD THE TRUSS IN CONFORMANCE WITH TPI; OR FABRICATING, HANDLING, SHIPPING, INSTALLING & BRACING OF TRUSSES.
DESIGN CONFORMS WITH APPLICABLE PROVISIONS OF NDS (NATIONAL DESIGN SPEC, BY AF&PA) AND TPI. ITW BCG CONNECTOR PLATES ARE MADE OF 20/18/16GA (W,H/SS/K) ASTM A653 GRADE 40/60 (W, K/H,SS) GALV. STEEL. APPLY PLATES TO EACH FACE OF TRUSS AND, UNLESS OTHERWISE LOCATED ON THIS DESIGN, POSITION PER DRAWINGS 160A-Z. ANY INSPECTION OF PLATES FOLLOWED BY (1) SHALL BE PER ANNEX A3 OF TPI1-2002 SEC.3. A SEAL ON THIS DRAWING INDICATES ACCEPTANCE OF PROFESSIONAL ENGINEERING RESPONSIBILITY SOLELY FOR THE TRUSS COMPONENT DESIGN SHOWN. THE SUITABILITY AND USE OF THIS COMPONENT FOR ANY BUILDING IS THE RESPONSIBILITY OF THE BUILDING DESIGNER PER ANSI/TPI 1 SEC. 2.

DOUGLAS FLEMING LICENSE No.66648 STATE OF FLORIDA PROFESSIONAL ENGINEER
AUG 20 '09

TC LL	20.0 PSF	REF R8228- 19899
TC DL	10.0 PSF	DATE 08/20/09
BC DL	10.0 PSF	DRW HCUSR8228 09232027
BC LL	0.0 PSF	HC-ENG DF/DF
TOT.LD.	40.0 PSF	SEQN- 9222
DUR.FAC.	1.25	FROM AH
SPACING	24.0"	JREF- 1TUD8228Z01

(9-070--Freeman Design Group Hudson -- , ** - EJ7A)

Top chord 2x4 SP #2 Dense
Bot chord 2x4 SP #2 Dense

Bottom chord checked for 10.00 psf non-concurrent live load.

Deflection meets L/240 live and L/180 total load.

110 mph wind, 15.00 ft mean hgt, ASCE 7-05, CLOSED bldg, not located within 4.50 ft from roof edge, CAT II, EXP B, wind TC DL=5.0 psf, wind BC DL=5.0 psf. Iw=1.00 GCpi(+/-)=0.18

Wind reactions based on MWFRS pressures.

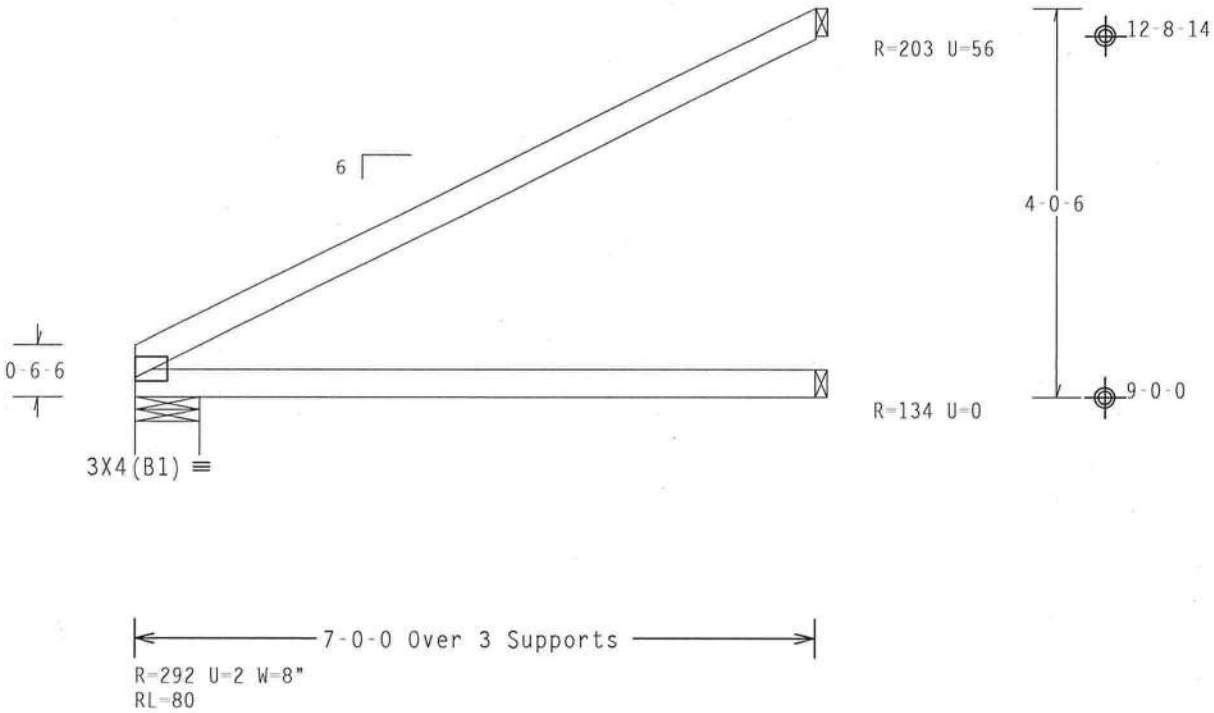

Design Crit: FBC2007Res/TPI-2002(STD)

PLT TYP. Wave FT/RT=10%(0%)/0(0) 8.07.00 QTY:3 FL/-/4/-/-/R/- Scale =.5"/Ft.

ALPINE
ITW Building Components Group Inc.
Haines City, FL 33844
FL C[illegible]078

WARNING TRUSSES REQUIRE EXTREME CARE IN FABRICATION, HANDLING, SHIPPING, INSTALLING AND BRACING. REFER TO BCSI (BUILDING COMPONENT SAFETY INFORMATION), PUBLISHED BY TPI (TRUSS PLATE INSTITUTE, 218 NORTH LEE STREET, SUITE 312, ALEXANDRIA, VA, 22314) AND WTCA (WOOD TRUSS COUNCIL OF AMERICA, 6300 ENTERPRISE LANE, MADISON, WI 53719) FOR SAFETY PRACTICES PRIOR TO PERFORMING THESE FUNCTIONS. UNLESS OTHERWISE INDICATED TOP CHORD SHALL HAVE PROPERLY ATTACHED STRUCTURAL PANELS AND BOTTOM CHORD SHALL HAVE A PROPERLY ATTACHED RIGID CEILING.

IMPORTANTFURNISH A COPY OF THIS DESIGN TO THE INSTALLATION CONTRACTOR. ITW BCG, INC. SHALL NOT BE RESPONSIBLE FOR ANY DEVIATION FROM THIS DESIGN; ANY FAILURE TO BUILD THE TRUSS IN CONFORMANCE WITH TPI; OR FABRICATING, HANDLING, SHIPPING, INSTALLING & BRACING OF TRUSSES.
DESIGN CONFORMS WITH APPLICABLE PROVISIONS OF NDS (NATIONAL DESIGN SPEC. BY AF&PA) AND TPI. ITW BCG CONNECTOR PLATES ARE MADE OF 20/18/16GA (W,H/SS/K) ASTM A653 GRADE 40/60 (W, K/H,SS) GALV. STEEL. APPLY PLATES TO EACH FACE OF TRUSS AND, UNLESS OTHERWISE LOCATED ON THIS DESIGN, POSITION PER DRAWINGS 160A-Z. ANY INSPECTION OF PLATES FOLLOWED BY (1) SHALL BE PER ANNEX A3 OF TPI1-2002 SEC.3. A SEAL ON THIS DRAWING INDICATES ACCEPTANCE OF PROFESSIONAL ENGINEERING RESPONSIBILITY SOLELY FOR THE TRUSS COMPONENT DESIGN SHOWN. THE SUITABILITY AND USE OF THIS COMPONENT FOR ANY BUILDING IS THE RESPONSIBILITY OF THE BUILDING DESIGNER PER ANSI/TPI 1 SEC. 2.

DOUGLAS FLEMING LICENSE No. 66648 STATE OF FLORIDA PROFESSIONAL ENGINEER
[illegible] 20 '09

TC LL	20.0 PSF	REF R8228- 19900
TC DL	10.0 PSF	DATE 08/20/09
BC DL	10.0 PSF	DRW HCUSR8228 09232047
BC LL	0.0 PSF	HC-ENG DF/DF
TOT.LD.	40.0 PSF	SEQN- 9228
DUR.FAC.	1.25	FROM AH
SPACING	24.0"	JREF- 1TUD8228Z01

(9-070--Freeman Design Group Hudson -- , ** - J1A)

Top chord 2x4 SP #2 Dense
Bot chord 2x4 SP #2 Dense

110 mph wind, 15.00 ft mean hgt, ASCE 7-05, PART._ENC. bldg, Located anywhere in roof, CAT II, EXP B, wind TC DL=5.0 psf, wind BC DL=5.0 psf. Iw=1.00 GCpi(+/-)=0.55

Bottom chord checked for 10.00 psf non-concurrent live load.

Negative reaction(s) of -321# MAX. (See below) from a non-wind load case requires uplift connection.

Wind reactions based on MWFRS pressures.

Roof overhang supports 2.00 psf soffit load.

Deflection meets L/240 live and L/180 total load.

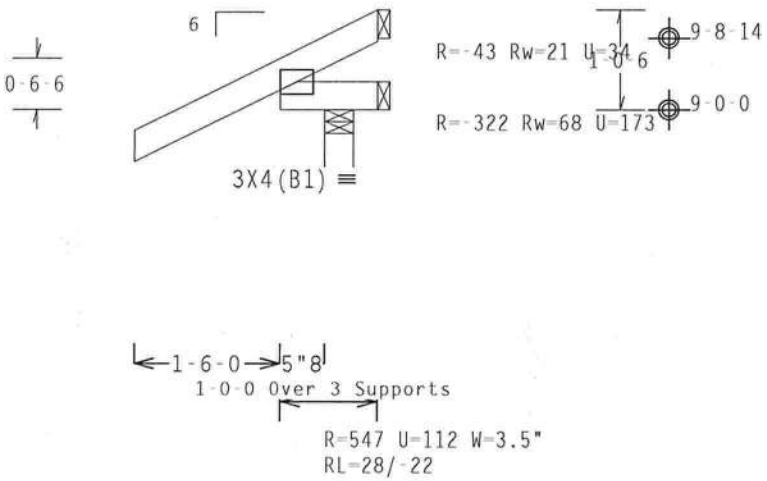

Design Crit: FBC2007Res/TPI-2002(STD)

PLT TYP. Wave FT/RT=10%(0%)/0(0) 8.07.00 [illegible] QTY:5 FL/-/4/-/-/R/- Scale =.5"/Ft.

ALPINE
ITW Building Components Group Inc.
Haines City, FL 33844
FL CO[illegible]278

WARNING TRUSSES REQUIRE EXTREME CARE IN FABRICATION, HANDLING, SHIPPING, INSTALLING AND BRACING. REFER TO BCSI (BUILDING COMPONENT SAFETY INFORMATION), PUBLISHED BY TPI (TRUSS PLATE INSTITUTE, 218 NORTH LEE STREET, SUITE 312, ALEXANDRIA, VA. 22314) AND WTCA (WOOD TRUSS COUNCIL OF AMERICA, 6300 ENTERPRISE LANE, MADISON, WI 53719) FOR SAFETY PRACTICES PRIOR TO PERFORMING THESE FUNCTIONS. UNLESS OTHERWISE INDICATED TOP CHORD SHALL HAVE PROPERLY ATTACHED STRUCTURAL PANELS AND BOTTOM CHORD SHALL HAVE A PROPERLY ATTACHED RIGID CEILING.

IMPORTANTFURNISH A COPY OF THIS DESIGN TO THE INSTALLATION CONTRACTOR. ITW BCG, INC. SHALL NOT BE RESPONSIBLE FOR ANY DEVIATION FROM THIS DESIGN; ANY FAILURE TO BUILD THE TRUSS IN CONFORMANCE WITH TPI; OR FABRICATING, HANDLING, SHIPPING, INSTALLING & BRACING OF TRUSSES.
DESIGN CONFORMS WITH APPLICABLE PROVISIONS OF NDS (NATIONAL DESIGN SPEC. BY AF&PA) AND TPI. ITW BCG CONNECTOR PLATES ARE MADE OF 20/18/16GA (W,H/SS/K) ASTM A653 GRADE 40/60 (W, K/H,SS) GALV. STEEL. APPLY PLATES TO EACH FACE OF TRUSS AND, UNLESS OTHERWISE LOCATED ON THIS DESIGN, POSITION PER DRAWINGS 160A-Z. ANY INSPECTION OF PLATES FOLLOWED BY (1) SHALL BE PER ANNEX A3 OF TPI1-2002 SEC.3. A SEAL ON THIS DRAWING INDICATES ACCEPTANCE OF PROFESSIONAL ENGINEERING RESPONSIBILITY SOLELY FOR THE TRUSS COMPONENT DESIGN SHOWN. THE SUITABILITY AND USE OF THIS COMPONENT FOR ANY BUILDING IS THE RESPONSIBILITY OF THE BUILDING DESIGNER PER ANSI/TPI 1 SEC. 2.

DOUGLAS FLEMING LICENSE No. 66648 STATE OF FLORIDA PROFESSIONAL ENGINEER
[illegible] 20 '09

TC LL	20.0 PSF	REF R8228- 19901
TC DL	10.0 PSF	DATE 08/20/09
BC DL	10.0 PSF	DRW HCUSR8228 09232021
BC LL	0.0 PSF	HC-ENG DF/DF
TOT.LD.	40.0 PSF	SEQN- 9248
DUR.FAC.	1.25	FROM AH
SPACING	24.0"	JREF- 1TUD8228Z01

(9-070--Freeman Design Group Hudson -- , ** - HJ7A)

Top chord 2x4 SP #2 Dense
Bot chord 2x4 SP #2 Dense
Webs 2x4 SP #3

The following trusses need concentrated loads at the end of their overhangs: 3-0-0 span/setback member on the 0-5-8 cant side requires 35 lbs and the 3-0-0 span/setback member on the 0-5-8 cant side requires 35 lbs.

Hipjack supports 7-0-0 setback jacks with 0-5-8 cantilever one face; 0-5-8 cantilever opposite face.

110 mph wind, 15.00 ft mean hgt, ASCE 7-05, PART._ENC. bldg, Located anywhere in roof, CAT II, EXP B, wind TC DL=5.0 psf, wind BC DL=5.0 psf. Iw=1.00 GCpi(+/-)=0.55

Wind reactions based on MWFRS pressures.

Sub-fascia beam assumptions: 4-6-0 sub-fascia beam on the 0-5-8 cantilever side. 4-6-0 sub-fascia beam on the 0-5-8 cantilever side.

Deflection meets L/240 live and L/180 total load.

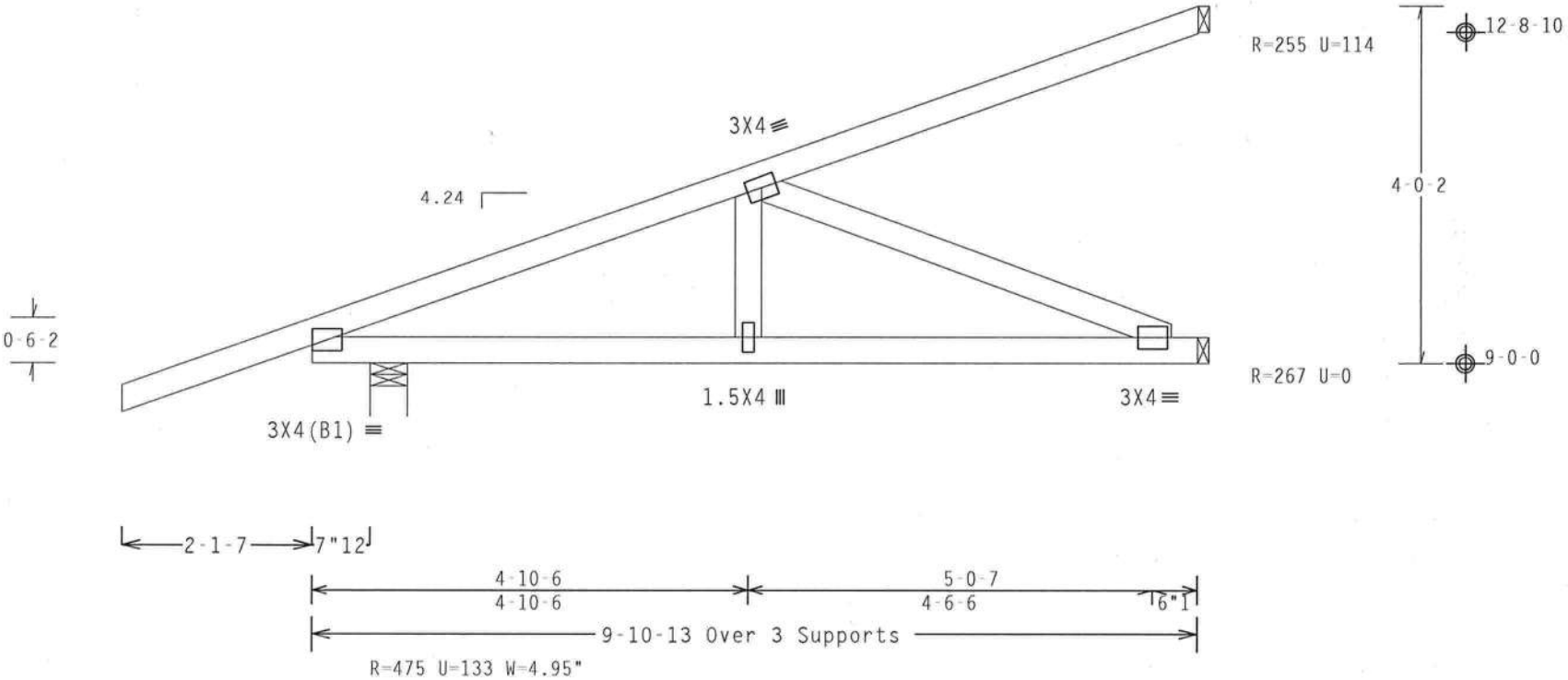

Design Crit: FBC2007Res/TPI-2002(STD)

PLT TYP. Wave FT/RT=10%(0%)/0(0) 8.07.00 [illegible] QTY:1 FL/-/4/-/-/R/- Scale =.5"/Ft.

ALPINE
ITW Building Components Group Inc.
Haines City, FL 33844
FL C[illegible]78

WARNING TRUSSES REQUIRE EXTREME CARE IN FABRICATION, HANDLING, SHIPPING, INSTALLING AND BRACING. REFER TO BCSI (BUILDING COMPONENT SAFETY INFORMATION), PUBLISHED BY TPI (TRUSS PLATE INSTITUTE, 218 NORTH LEE STREET, SUITE 312, ALEXANDRIA, VA, 22314) AND WTCA (WOOD TRUSS COUNCIL OF AMERICA, 6300 ENTERPRISE LANE, MADISON, WI 53719) FOR SAFETY PRACTICES PRIOR TO PERFORMING THESE FUNCTIONS. UNLESS OTHERWISE INDICATED TOP CHORD SHALL HAVE PROPERLY ATTACHED STRUCTURAL PANELS AND BOTTOM CHORD SHALL HAVE A PROPERLY ATTACHED RIGID CEILING.

IMPORTANTFURNISH A COPY OF THIS DESIGN TO THE INSTALLATION CONTRACTOR. ITW BCG, INC. SHALL NOT BE RESPONSIBLE FOR ANY DEVIATION FROM THIS DESIGN; ANY FAILURE TO BUILD THE TRUSS IN CONFORMANCE WITH TPI; OR FABRICATING, HANDLING, SHIPPING, INSTALLING & BRACING OF TRUSSES. DESIGN CONFORMS WITH APPLICABLE PROVISIONS OF NDS (NATIONAL DESIGN SPEC, BY AF&PA) AND TPI. ITW BCG CONNECTOR PLATES ARE MADE OF 20/18/16GA (W,H/SS/K) ASTM A653 GRADE 40/60 (W, K/H,SS) GALV. STEEL. APPLY PLATES TO EACH FACE OF TRUSS AND, UNLESS OTHERWISE LOCATED ON THIS DESIGN, POSITION PER DRAWINGS 160A-Z. ANY INSPECTION OF PLATES FOLLOWED BY (1) SHALL BE PER ANNEX A3 OF TPI1-2002 SEC.3. A SEAL ON THIS DRAWING INDICATES ACCEPTANCE OF PROFESSIONAL ENGINEERING RESPONSIBILITY SOLELY FOR THE TRUSS COMPONENT DESIGN SHOWN. THE SUITABILITY AND USE OF THIS COMPONENT FOR ANY BUILDING IS THE RESPONSIBILITY OF THE BUILDING DESIGNER PER ANSI/TPI 1 SEC. 2.

DOUGLAS FLEMING LICENSE No. 66648 STATE OF FLORIDA PROFESSIONAL ENGINEER

[illegible] 20 '09

TC LL	20.0 PSF	REF	R8228- 19902
TC DL	10.0 PSF	DATE	08/20/09
BC DL	10.0 PSF	DRW	HCUSR8228 09232017
BC LL	0.0 PSF	HC-ENG	DF/DF
TOT.LD.	40.0 PSF	SEQN-	9311
DUR.FAC.	1.25	FROM	AH
SPACING	SEE ABOVE	JREF-	1TUD8228Z01

(9-070--Freeman Design Group Hudson -- , ** - HJ7B)

Top chord 2x4 SP #2 Dense
Bot chord 2x4 SP #2 Dense
Webs 2x4 SP #3

The following trusses need concentrated loads at the end of their overhangs: 3-0-0 span/setback member on the 0-6-4 cant side requires 36 lbs and the 3-0-0 span/setback member on the 0-6-4 cant side requires 36 lbs.

Hipjack supports 7-0-0 setback jacks with 0-6-4 cantilever one face; 0-6-4 cantilever opposite face.

110 mph wind, 15.00 ft mean hgt, ASCE 7-05, PART._ENC. bldg, Located anywhere in roof, CAT II, EXP B, wind TC DL=5.0 psf, wind BC DL=5.0 psf. Iw=1.00 GCpi(+/-)=0.55

Wind reactions based on MWFRS pressures.

Sub-fascia beam assumptions: 4-6-0 sub-fascia beam on the 0-6-4 cantilever side. 4-6-0 sub-fascia beam on the 0-6-4 cantilever side.

Deflection meets L/240 live and L/180 total load.

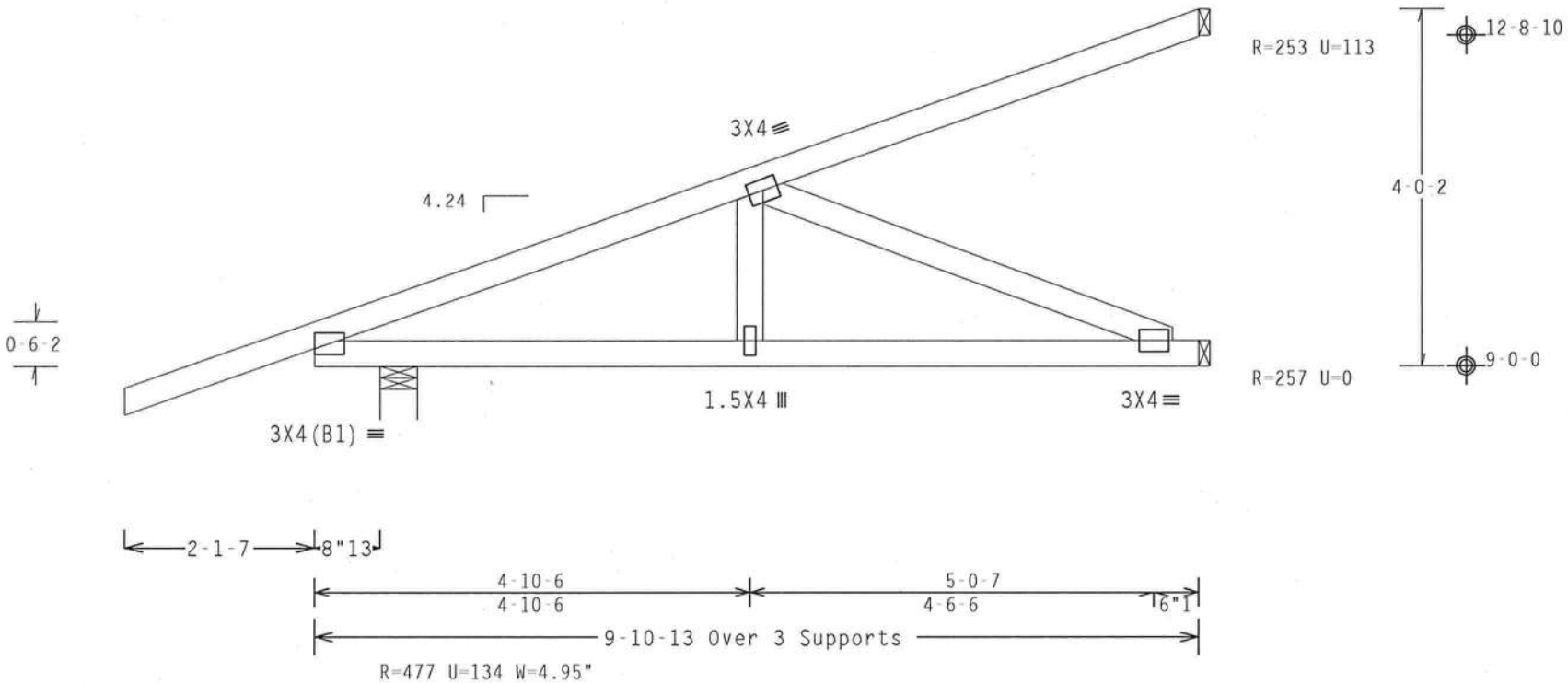

Design Crit: FBC2007Res/TPI-2002(STD)

PLT TYP. Wave FT/RT=10%(0%)/0(0) 8.07.00 QTY:1 FL/-/4/-/-/R/- Scale =.5"/Ft.

ALPINE
ITW Building Components Group Inc.
Haines City, FL 33844
FL COA #0278

WARNING TRUSSES REQUIRE EXTREME CARE IN FABRICATION, HANDLING, SHIPPING, INSTALLING AND BRACING. REFER TO BCSI (BUILDING COMPONENT SAFETY INFORMATION), PUBLISHED BY TPI (TRUSS PLATE INSTITUTE, 218 NORTH LEE STREET, SUITE 312, ALEXANDRIA, VA, 22314) AND WTCA (WOOD TRUSS COUNCIL OF AMERICA, 6300 ENTERPRISE LANE, MADISON, WI 53719) FOR SAFETY PRACTICES PRIOR TO PERFORMING THESE FUNCTIONS. UNLESS OTHERWISE INDICATED TOP CHORD SHALL HAVE PROPERLY ATTACHED STRUCTURAL PANELS AND BOTTOM CHORD SHALL HAVE A PROPERLY ATTACHED RIGID CEILING.

IMPORTANTFURNISH A COPY OF THIS DESIGN TO THE INSTALLATION CONTRACTOR. ITW BCG, INC. SHALL NOT BE RESPONSIBLE FOR ANY DEVIATION FROM THIS DESIGN; ANY FAILURE TO BUILD THE TRUSS IN COMFORMANCE WITH TPI; OR FABRICATING, HANDLING, SHIPPING, INSTALLING & BRACING OF TRUSSES. DESIGN CONFORMS WITH APPLICABLE PROVISIONS OF NDS (NATIONAL DESIGN SPEC, BY AF&PA) AND TPI. ITW BCG CONNECTOR PLATES ARE MADE OF 20/18/16GA (W,H/SS/K) ASTM A653 GRADE 40/60 (W, K/H,SS) GALV. STEEL. APPLY PLATES TO EACH FACE OF TRUSS AND, UNLESS OTHERWISE LOCATED ON THIS DESIGN, POSITION PER DRAWINGS 160A-Z. ANY INSPECTION OF PLATES FOLLOWED BY (1) SHALL BE PER ANNEX A3 OF TPI1-2002 SEC.3. A SEAL ON THIS DRAWING INDICATES ACCEPTANCE OF PROFESSIONAL ENGINEERING RESPONSIBILITY SOLELY FOR THE TRUSS COMPONENT DESIGN SHOWN. THE SUITABILITY AND USE OF THIS COMPONENT FOR ANY BUILDING IS THE RESPONSIBILITY OF THE BUILDING DESIGNER PER ANSI/TPI 1 SEC. 2.

DOUGLAS FLEMING LICENSE No. 66648 STATE OF FLORIDA PROFESSIONAL ENGINEER
AUG 20 '09

TC LL	20.0 PSF	REF R8228- 19903
TC DL	10.0 PSF	DATE 08/20/09
BC DL	10.0 PSF	DRW HCUSR8228 09232022
BC LL	0.0 PSF	HC-ENG DF/DF
TOT.LD.	40.0 PSF	SEQN- 9316
DUR.FAC.	1.25	FROM AH
SPACING	SEE ABOVE	JREF- 1TUD8228Z01

(9-070--Freeman Design Group Hudson -- , ** - HJ7D)

Top chord 2x4 SP #2 Dense
Bot chord 2x4 SP #2 Dense
Webs 2x4 SP #3

The following members need concentrated loads at the heel: 1-0-0 span/setback member on the 0-5-0 cant side requires 0 lbs and the 1-0-0 span/setback member on the 0-5-0 cant side requires 0 lbs.

Hipjack supports 6-11-8 setback jacks with 0-5-0 cantilever one face; 0-5-0 cantilever opposite face.

110 mph wind, 15.00 ft mean hgt, ASCE 7-05, PART._ENC. bldg, Located anywhere in roof, CAT II, EXP B, wind TC DL=5.0 psf, wind BC DL=5.0 psf. Iw=1.00 GCpi(+/-)=0.55

Wind reactions based on MWFRS pressures.

Sub-fascia beam assumptions: 1-0-0 sub-fascia beam on the 0-5-0 cantilever side. 1-0-0 sub-fascia beam on the 0-5-0 cantilever side.

Deflection meets L/240 live and L/180 total load.

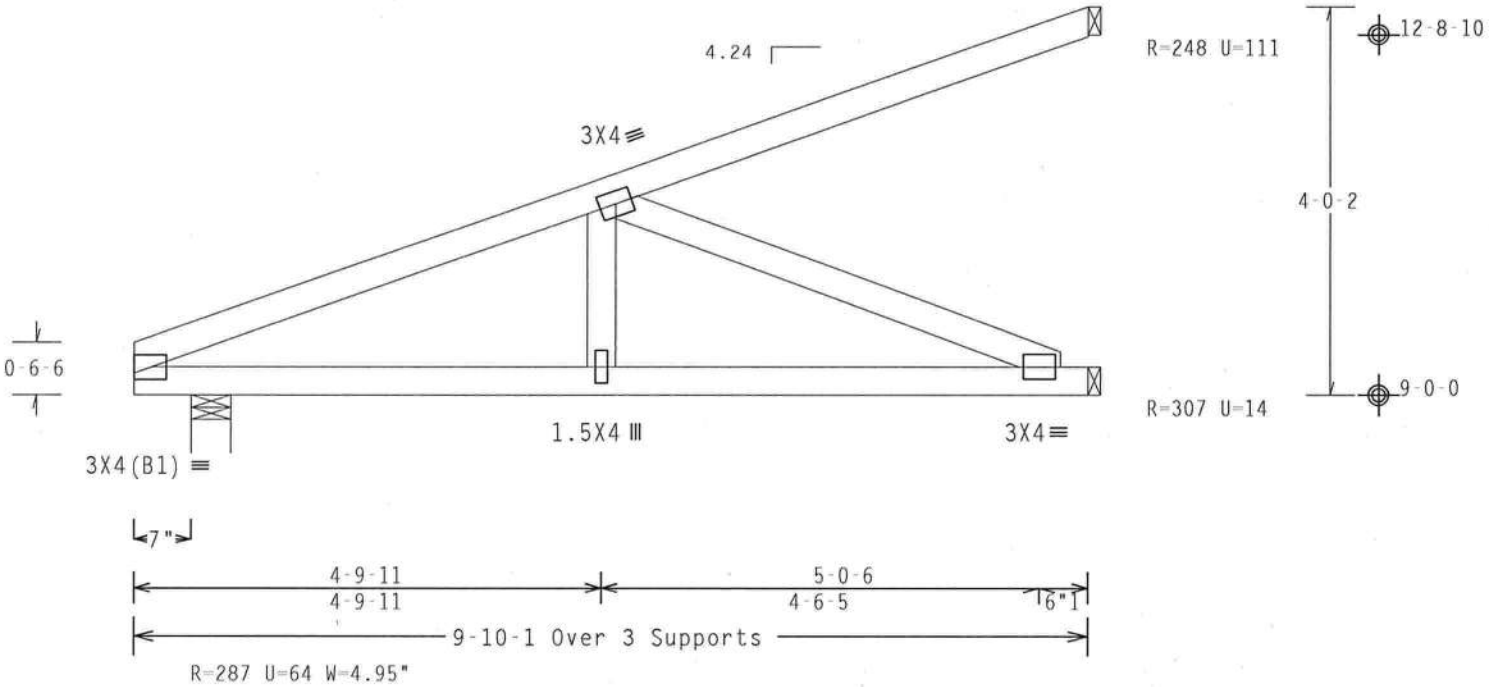

Design Crit: FBC2007Res/TPI-2002(STD)

PLT TYP. Wave FT/RT=10%(0%)/0(0) 8.07.00 QTY:1 FL/-/4/-/-/R/- Scale =.5"/Ft.

ALPINE
ITW Building Components Group Inc.
Haines City, FL 33844
FL C[illegible]278

WARNING TRUSSES REQUIRE EXTREME CARE IN FABRICATION, HANDLING, SHIPPING, INSTALLING AND BRACING. REFER TO BCSI (BUILDING COMPONENT SAFETY INFORMATION), PUBLISHED BY TPI (TRUSS PLATE INSTITUTE, 218 NORTH LEE STREET, SUITE 312, ALEXANDRIA, VA, 22314) AND WTCA (WOOD TRUSS COUNCIL OF AMERICA, 6300 ENTERPRISE LANE, MADISON, WI 53719) FOR SAFETY PRACTICES PRIOR TO PERFORMING THESE FUNCTIONS. UNLESS OTHERWISE INDICATED TOP CHORD SHALL HAVE PROPERLY ATTACHED STRUCTURAL PANELS AND BOTTOM CHORD SHALL HAVE A PROPERLY ATTACHED RIGID CEILING.

IMPORTANT FURNISH A COPY OF THIS DESIGN TO THE INSTALLATION CONTRACTOR. ITW BCG, INC. SHALL NOT BE RESPONSIBLE FOR ANY DEVIATION FROM THIS DESIGN; ANY FAILURE TO BUILD THE TRUSS IN CONFORMANCE WITH TPI; OR FABRICATING, HANDLING, SHIPPING, INSTALLING & BRACING OF TRUSSES. DESIGN CONFORMS WITH APPLICABLE PROVISIONS OF NDS (NATIONAL DESIGN SPEC. BY AF&PA) AND TPI. ITW BCG CONNECTOR PLATES ARE MADE OF 20/18/16GA (W,H/SS/K) ASTM A653 GRADE 40/60 (W, K/H,SS) GALV. STEEL. APPLY PLATES TO EACH FACE OF TRUSS AND, UNLESS OTHERWISE LOCATED ON THIS DESIGN, POSITION PER DRAWINGS 160A-Z. ANY INSPECTION OF PLATES FOLLOWED BY (1) SHALL BE PER ANNEX A3 OF TPI1-2002 SEC.3. A SEAL ON THIS DRAWING INDICATES ACCEPTANCE OF PROFESSIONAL ENGINEERING RESPONSIBILITY SOLELY FOR THE TRUSS COMPONENT DESIGN SHOWN. THE SUITABILITY AND USE OF THIS COMPONENT FOR ANY BUILDING IS THE RESPONSIBILITY OF THE BUILDING DESIGNER PER ANSI/TPI 1 SEC. 2.

DOUGLAS FLEMING LICENSE No. 66648 STATE OF FLORIDA PROFESSIONAL ENGINEER [illegible] 20 '09

TC LL	20.0 PSF	REF R8228- 19904
TC DL	10.0 PSF	DATE 08/20/09
BC DL	10.0 PSF	DRW HCUSR8228 09232030
BC LL	0.0 PSF	HC-ENG DF/DF
TOT.LD.	40.0 PSF	SEQN- 9330
DUR.FAC.	1.25	FROM AH
SPACING	SEE ABOVE	JREF- 1TUD8228Z01

Top chord 2x4 SP #2 Dense
Bot chord 2x4 SP #2 Dense
Webs 2x4 SP #3

The following trusses need concentrated loads at the end of their overhangs: 3-0-0 span/setback member on the 0-6-0 cant side requires 36 lbs and the 3-0-0 span/setback member on the 0-6-0 cant side requires 36 lbs.

Hipjack supports 7-0-0 setback jacks with 0-6-0 cantilever one face; 0-6-0 cantilever opposite face.

110 mph wind, 15.00 ft mean hgt, ASCE 7-05, PART._ENC. bldg, Located anywhere in roof, CAT II, EXP B, wind TC DL=5.0 psf, wind BC DL=5.0 psf. Iw=1.00 GCpi(+/-)=0.55

Wind reactions based on MWFRS pressures.

Sub-fascia beam assumptions: 4-6-0 sub-fascia beam on the 0-6-0 cantilever side. 4-6-0 sub-fascia beam on the 0-6-0 cantilever side.

Deflection meets L/240 live and L/180 total load.

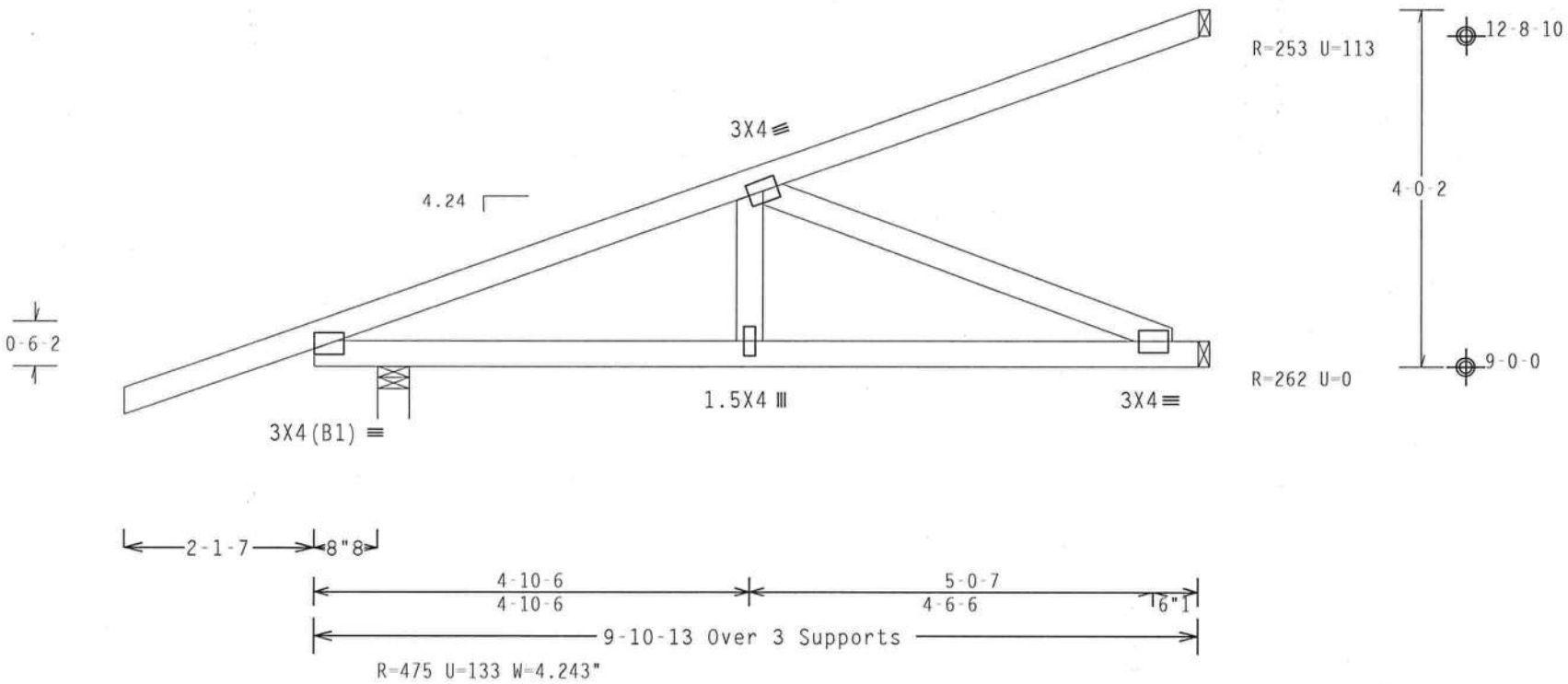

Design Crit: FBC2007Res/TPI-2002(STD)

PLT TYP. Wave | FT/RT=10%(0%)/0(0) | 8.07.00 | QTY:1 | FL/-/4/-/-/R/- | Scale =.5"/Ft.

ALPINE
ITW Building Components Group Inc.
Haines City, FL 33844
FL C[illegible]078

WARNING TRUSSES REQUIRE EXTREME CARE IN FABRICATION, HANDLING, SHIPPING, INSTALLING AND BRACING. REFER TO BCSI (BUILDING COMPONENT SAFETY INFORMATION), PUBLISHED BY TPI (TRUSS PLATE INSTITUTE, 218 NORTH LEE STREET, SUITE 312, ALEXANDRIA, VA, 22314) AND WTCA (WOOD TRUSS COUNCIL OF AMERICA, 6300 ENTERPRISE LANE, MADISON, WI 53719) FOR SAFETY PRACTICES PRIOR TO PERFORMING THESE FUNCTIONS. UNLESS OTHERWISE INDICATED TOP CHORD SHALL HAVE PROPERLY ATTACHED STRUCTURAL PANELS AND BOTTOM CHORD SHALL HAVE A PROPERLY ATTACHED RIGID CEILING.

IMPORTANT FURNISH A COPY OF THIS DESIGN TO THE INSTALLATION CONTRACTOR. ITW BCG, INC. SHALL NOT BE RESPONSIBLE FOR ANY DEVIATION FROM THIS DESIGN; ANY FAILURE TO BUILD THE TRUSS IN CONFORMANCE WITH TPI; OR FABRICATING, HANDLING, SHIPPING, INSTALLING & BRACING OF TRUSSES.
DESIGN CONFORMS WITH APPLICABLE PROVISIONS OF NDS (NATIONAL DESIGN SPEC, BY AF&PA) AND TPI. ITW BCG CONNECTOR PLATES ARE MADE OF 20/18/16GA (W,H/SS/K) ASTM A653 GRADE 40/60 (W, K/H,SS) GALV. STEEL. APPLY PLATES TO EACH FACE OF TRUSS AND, UNLESS OTHERWISE LOCATED ON THIS DESIGN, POSITION PER DRAWINGS 160A-2. ANY INSPECTION OF PLATES FOLLOWED BY (1) SHALL BE PER ANNEX A3 OF TPI1-2002 SEC.3. A SEAL ON THIS DRAWING INDICATES ACCEPTANCE OF PROFESSIONAL ENGINEERING RESPONSIBILITY SOLELY FOR THE TRUSS COMPONENT DESIGN SHOWN. THE SUITABILITY AND USE OF THIS COMPONENT FOR ANY BUILDING IS THE RESPONSIBILITY OF THE BUILDING DESIGNER PER ANSI/TPI 1 SEC. 2.

DOUGLAS FLEMING LICENSE No. 66648 STATE OF FLORIDA PROFESSIONAL ENGINEER
9 20 '09

TC LL	20.0 PSF	REF	R8228- 19905
TC DL	10.0 PSF	DATE	08/20/09
BC DL	10.0 PSF	DRW	HCUSR8228 09232034
BC LL	0.0 PSF	HC-ENG	DF/DF
TOT.LD.	40.0 PSF	SEQN-	9321
DUR.FAC.	1.25	FROM	AH
SPACING	SEE ABOVE	JREF-	1TUD8228Z01

(9-070--Freeman Design Group Hudson -- , ** - J1B)

Top chord 2x4 SP #2 Dense
Bot chord 2x4 SP #2 Dense

110 mph wind, 15.00 ft mean hgt, ASCE 7-05, PART._ENC. bldg, Located anywhere in roof, CAT II, EXP B, wind TC DL=5.0 psf, wind BC DL=5.0 psf. Iw=1.00 GCpi(+/-)=0.55

Bottom chord checked for 10.00 psf non-concurrent live load.

Provide (3)16d (0.162"x3.5") nails toe-nailed at top chord.
Provide (3)16d (0.162"x3.5") nails toe-nailed at bottom chord.

Negative reaction(s) of -423# MAX. (See below) from a non-wind load case requires uplift connection.

Wind reactions based on MWFRS pressures.

Roof overhang supports 2.00 psf soffit load.

Deflection meets L/240 live and L/180 total load.

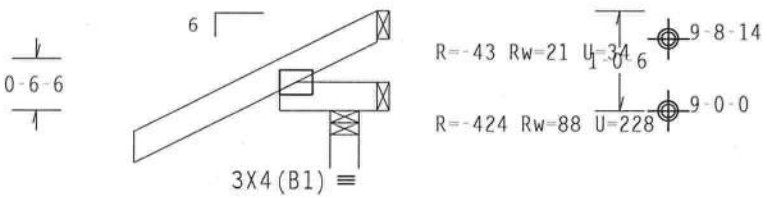

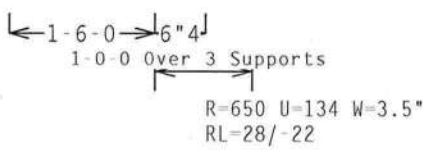

Design Crit: FBC2007Res/TPI-2002(STD)

PLT TYP. Wave FT/RT=10%(0%)/0(0) 8.07.00.1 QTY:1 FL/-/4/-/-/R/- Scale =.5"/Ft.

ALPINE
ITW Building Components Group Inc.
Haines City, FL 33844
FL C

WARNING TRUSSES REQUIRE EXTREME CARE IN FABRICATION, HANDLING, SHIPPING, INSTALLING AND BRACING. REFER TO BCSI (BUILDING COMPONENT SAFETY INFORMATION), PUBLISHED BY TPI (TRUSS PLATE INSTITUTE, 218 NORTH LEE STREET, SUITE 312, ALEXANDRIA, VA, 22314) AND WTCA (WOOD TRUSS COUNCIL OF AMERICA, 6300 ENTERPRISE LANE, MADISON, WI 53719) FOR SAFETY PRACTICES PRIOR TO PERFORMING THESE FUNCTIONS. UNLESS OTHERWISE INDICATED TOP CHORD SHALL HAVE PROPERLY ATTACHED STRUCTURAL PANELS AND BOTTOM CHORD SHALL HAVE A PROPERLY ATTACHED RIGID CEILING.

IMPORTANT FURNISH A COPY OF THIS DESIGN TO THE INSTALLATION CONTRACTOR. ITW BCG, INC. SHALL NOT BE RESPONSIBLE FOR ANY DEVIATION FROM THIS DESIGN; ANY FAILURE TO BUILD THE TRUSS IN COMFORMANCE WITH TPI; OR FABRICATING, HANDLING, SHIPPING, INSTALLING & BRACING OF TRUSSES.
DESIGN CONFORMS WITH APPLICABLE PROVISIONS OF NDS (NATIONAL DESIGN SPEC. BY AF&PA) AND TPI. ITW BCG CONNECTOR PLATES ARE MADE OF 20/18/16GA (W,H/SS/K) ASTM A653 GRADE 40/60 (W, K/H,SS) GALV. STEEL. APPLY PLATES TO EACH FACE OF TRUSS AND, UNLESS OTHERWISE LOCATED ON THIS DESIGN, POSITION PER DRAWINGS 160A-Z. ANY INSPECTION OF PLATES FOLLOWED BY (1) SHALL BE PER ANNEX A3 OF TPI1-2002 SEC.3. A SEAL ON THIS DRAWING INDICATES ACCEPTANCE OF PROFESSIONAL ENGINEERING RESPONSIBILITY SOLELY FOR THE TRUSS COMPONENT DESIGN SHOWN. THE SUITABILITY AND USE OF THIS COMPONENT FOR ANY BUILDING IS THE RESPONSIBILITY OF THE BUILDING DESIGNER PER ANSI/TPI 1 SEC. 2.

DOUGLAS FLEMING LICENSE No. 66648 STATE OF FLORIDA PROFESSIONAL ENGINEER
20 '09

TC LL	20.0 PSF	REF R8228- 19906
TC DL	10.0 PSF	DATE 08/20/09
BC DL	10.0 PSF	DRW HCUSR8228 09232025
BC LL	0.0 PSF	HC-ENG DF/DF
TOT.LD.	40.0 PSF	SEQN- 9254
DUR.FAC.	1.25	FROM AH
SPACING	24.0"	JREF- 1TUD8228Z01

(9-070--Freeman Design Group Hudson -- , ** - J3A)

Top chord 2x4 SP #2 Dense
Bot chord 2x4 SP #2 Dense

Roof overhang supports 2.00 psf soffit load.

Bottom chord checked for 10.00 psf non-concurrent live load.

110 mph wind, 15.00 ft mean hgt, ASCE 7-05, PART._ENC. bldg, Located anywhere in roof, CAT II, EXP B, wind TC DL=5.0 psf, wind BC DL=5.0 psf. Iw=1.00 GCpi(+/-)=0.55

Wind reactions based on MWFRS pressures.

Deflection meets L/240 live and L/180 total load.

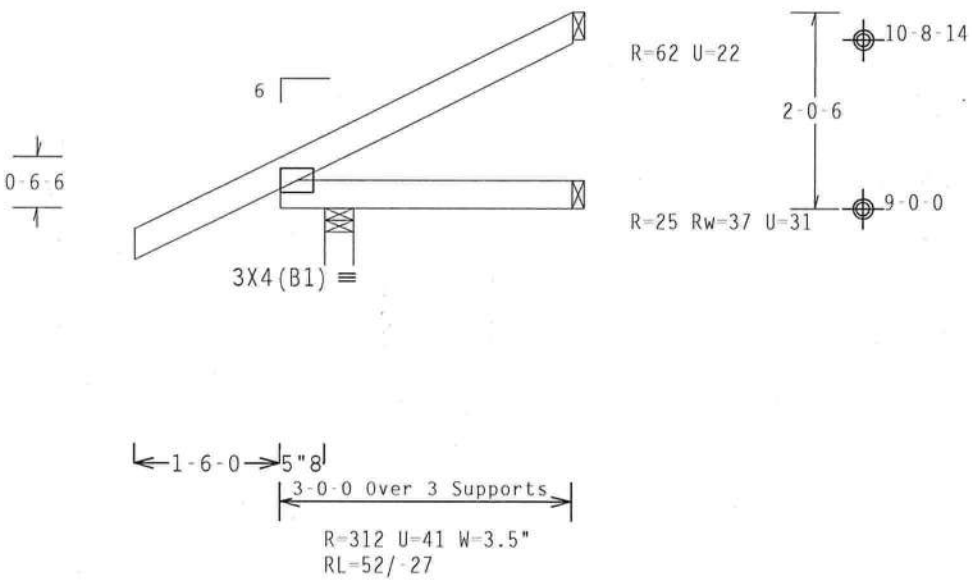

Design Crit: FBC2007Res/TPI-2002(STD)

PLT TYP. Wave | FT/RT=10%(0%)/0(0) | 8.07.00 | QTY:5 | FL/-/4/-/-/R/- | Scale =.5"/Ft.

ALPINE
ITW Building Components Group Inc.
Haines City, FL 33844
FL C[illegible]78

WARNING TRUSSES REQUIRE EXTREME CARE IN FABRICATION, HANDLING, SHIPPING, INSTALLING AND BRACING. REFER TO BCSI (BUILDING COMPONENT SAFETY INFORMATION), PUBLISHED BY TPI (TRUSS PLATE INSTITUTE, 218 NORTH LEE STREET, SUITE 312, ALEXANDRIA, VA, 22314) AND WTCA (WOOD TRUSS COUNCIL OF AMERICA, 6300 ENTERPRISE LANE, MADISON, WI 53719) FOR SAFETY PRACTICES PRIOR TO PERFORMING THESE FUNCTIONS. UNLESS OTHERWISE INDICATED TOP CHORD SHALL HAVE PROPERLY ATTACHED STRUCTURAL PANELS AND BOTTOM CHORD SHALL HAVE A PROPERLY ATTACHED RIGID CEILING.

IMPORTANTFURNISH A COPY OF THIS DESIGN TO THE INSTALLATION CONTRACTOR. ITW BCG, INC. SHALL NOT BE RESPONSIBLE FOR ANY DEVIATION FROM THIS DESIGN; ANY FAILURE TO BUILD THE TRUSS IN CONFORMANCE WITH TPI; OR FABRICATING, HANDLING, SHIPPING, INSTALLING & BRACING OF TRUSSES.
DESIGN CONFORMS WITH APPLICABLE PROVISIONS OF NDS (NATIONAL DESIGN SPEC, BY AF&PA) AND TPI. ITW BCG CONNECTOR PLATES ARE MADE OF 20/18/16GA (W,H/SS/K) ASTM A653 GRADE 40/60 (W, K/H,SS) GALV. STEEL. APPLY PLATES TO EACH FACE OF TRUSS AND, UNLESS OTHERWISE LOCATED ON THIS DESIGN, POSITION PER DRAWINGS 160A-Z. ANY INSPECTION OF PLATES FOLLOWED BY (1) SHALL BE PER ANNEX A3 OF TPI1-2002 SEC.3. A SEAL ON THIS DRAWING INDICATES ACCEPTANCE OF PROFESSIONAL ENGINEERING RESPONSIBILITY SOLELY FOR THE TRUSS COMPONENT DESIGN SHOWN. THE SUITABILITY AND USE OF THIS COMPONENT FOR ANY BUILDING IS THE RESPONSIBILITY OF THE BUILDING DESIGNER PER ANSI/TPI 1 SEC. 2.

DOUGLAS FLEMING LICENSE No. 66648 STATE OF FLORIDA PROFESSIONAL ENGINEER
[illegible]9 20 '09

TC LL	20.0 PSF	REF	R8228- 19907
TC DL	10.0 PSF	DATE	08/20/09
BC DL	10.0 PSF	DRW	HCUSR8228 09232019
BC LL	0.0 PSF	HC-ENG	DF/DF
TOT.LD.	40.0 PSF	SEQN-	9257
DUR.FAC.	1.25	FROM	AH
SPACING	24.0"	JREF-	1TUD8228Z01

(9-070--Freeman Design Group Hudson -- , ** - J3B)

Top chord 2x4 SP #2 Dense
Bot chord 2x4 SP #2 Dense

Roof overhang supports 2.00 psf soffit load.

Bottom chord checked for 10.00 psf non-concurrent live load.

110 mph wind, 15.00 ft mean hgt, ASCE 7-05, PART._ENC. bldg, Located anywhere in roof, CAT II, EXP B, wind TC DL=5.0 psf, wind BC DL=5.0 psf. Iw=1.00 GCpi(+/-)=0.55

Wind reactions based on MWFRS pressures.

Deflection meets L/240 live and L/180 total load.

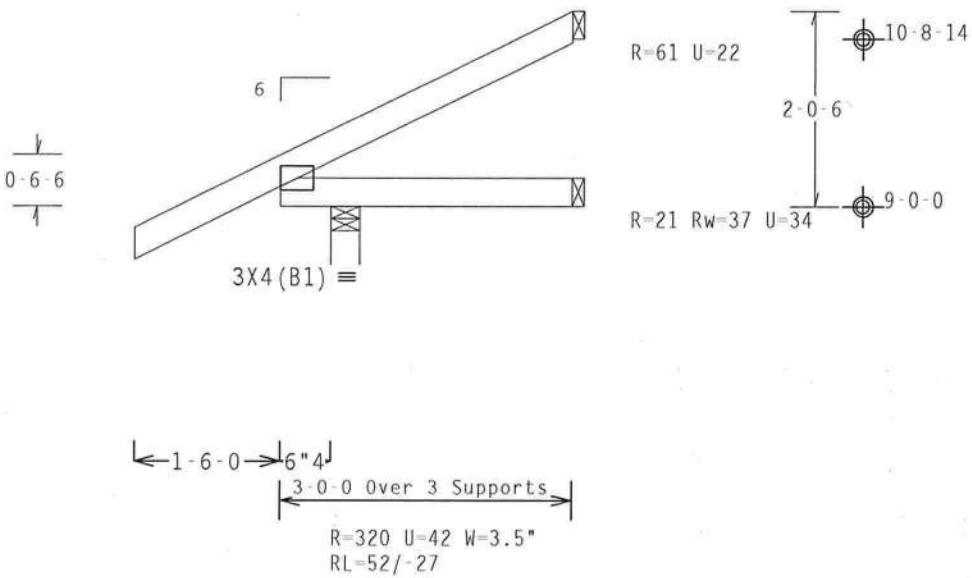

Design Crit: FBC2007Res/TPI-2002(STD)

PLT TYP. Wave FT/RT=10%(0%)/0(0) 8.07.00 QTY:1 FL/-/4/-/-/R/- Scale =.5"/Ft.

ALPINE
ITW Building Components Group Inc.
Haines City, FL 33844
FL C[illegible]78

WARNING TRUSSES REQUIRE EXTREME CARE IN FABRICATION, HANDLING, SHIPPING, INSTALLING AND BRACING. REFER TO BCSI (BUILDING COMPONENT SAFETY INFORMATION), PUBLISHED BY TPI (TRUSS PLATE INSTITUTE, 218 NORTH LEE STREET, SUITE 312, ALEXANDRIA, VA, 22314) AND WTCA (WOOD TRUSS COUNCIL OF AMERICA, 6300 ENTERPRISE LANE, MADISON, WI 53719) FOR SAFETY PRACTICES PRIOR TO PERFORMING THESE FUNCTIONS. UNLESS OTHERWISE INDICATED TOP CHORD SHALL HAVE PROPERLY ATTACHED STRUCTURAL PANELS AND BOTTOM CHORD SHALL HAVE A PROPERLY ATTACHED RIGID CEILING.

IMPORTANTFURNISH A COPY OF THIS DESIGN TO THE INSTALLATION CONTRACTOR. ITW BCG, INC. SHALL NOT BE RESPONSIBLE FOR ANY DEVIATION FROM THIS DESIGN; ANY FAILURE TO BUILD THE TRUSS IN CONFORMANCE WITH TPI; OR FABRICATING, HANDLING, SHIPPING, INSTALLING & BRACING OF TRUSSES. DESIGN CONFORMS WITH APPLICABLE PROVISIONS OF NDS (NATIONAL DESIGN SPEC. BY AF&PA) AND TPI. ITW BCG CONNECTOR PLATES ARE MADE OF 20/18/16GA (W,H/SS/K) ASTM A653 GRADE 40/60 (W, K/H,SS) GALV. STEEL. APPLY PLATES TO EACH FACE OF TRUSS AND, UNLESS OTHERWISE LOCATED ON THIS DESIGN, POSITION PER DRAWINGS 160A-Z. ANY INSPECTION OF PLATES FOLLOWED BY (1) SHALL BE PER ANNEX A3 OF TPI1-2002 SEC.3. A SEAL ON THIS DRAWING INDICATES ACCEPTANCE OF PROFESSIONAL ENGINEERING RESPONSIBILITY SOLELY FOR THE TRUSS COMPONENT DESIGN SHOWN. THE SUITABILITY AND USE OF THIS COMPONENT FOR ANY BUILDING IS THE RESPONSIBILITY OF THE BUILDING DESIGNER PER ANSI/TPI 1 SEC. 2.

DOUGLAS FLEMING LICENSE No. 66648 STATE OF FLORIDA PROFESSIONAL ENGINEER
[illegible]9 20 '09

TC LL	20.0 PSF	REF	R8228- 19908
TC DL	10.0 PSF	DATE	08/20/09
BC DL	10.0 PSF	DRW	HCUSR8228 09232024
BC LL	0.0 PSF	HC-ENG	DF/DF
TOT.LD.	40.0 PSF	SEQN-	9263
DUR.FAC.	1.25	FROM	AH
SPACING	24.0"	JREF-	1TUD8228Z01

Top chord 2x4 SP #2 Dense
Bot chord 2x4 SP #2 Dense

Roof overhang supports 2.00 psf soffit load.

Bottom chord checked for 10.00 psf non-concurrent live load.

110 mph wind, 15.00 ft mean hgt, ASCE 7-05, PART._ENC. bldg, not located within 4.50 ft from roof edge, CAT II, EXP B, wind TC DL=5.0 psf, wind BC DL=5.0 psf. Iw=1.00 GCpi(+/-)=0.55

Wind reactions based on MWFRS pressures.

Deflection meets L/240 live and L/180 total load.

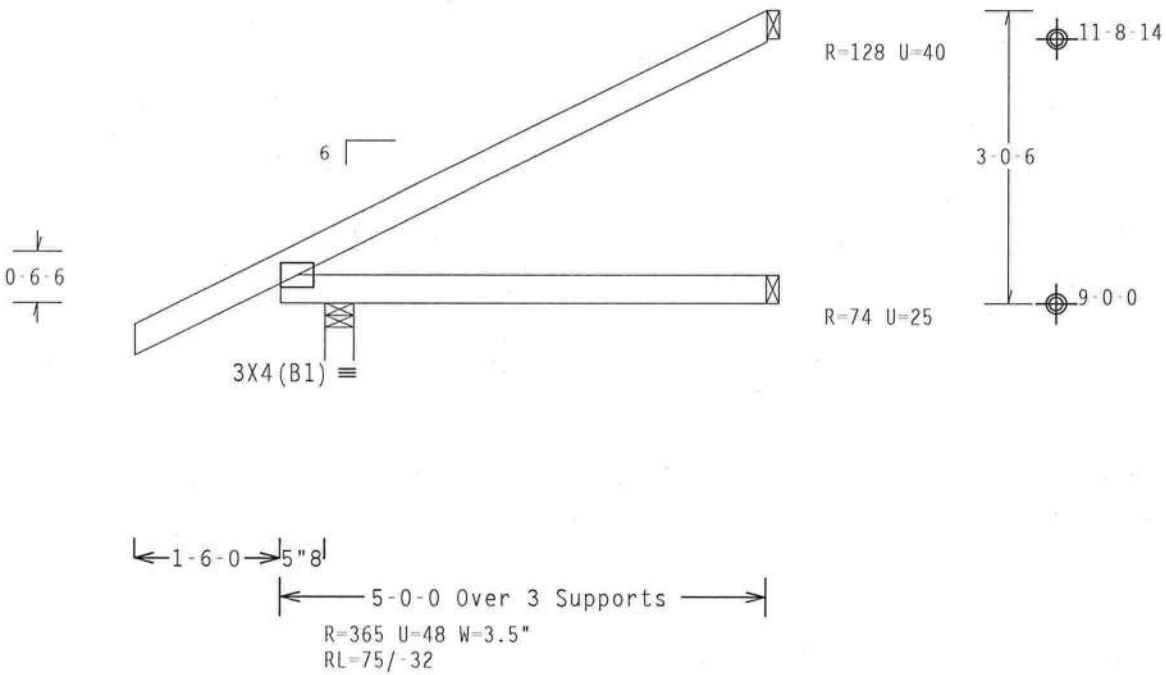

Design Crit: FBC2007Res/TPI-2002(STD)

PLT TYP. Wave FT/RT=10%(0%)/0(0) 8.07.00 QTY:5 FL/-/4/-/-/R/- Scale =.5"/Ft.

ALPINE
ITW Building Components Group Inc.
Haines City, FL 33844
FL C[illegible]78

WARNING TRUSSES REQUIRE EXTREME CARE IN FABRICATION, HANDLING, SHIPPING, INSTALLING AND BRACING. REFER TO BCSI (BUILDING COMPONENT SAFETY INFORMATION), PUBLISHED BY TPI (TRUSS PLATE INSTITUTE, 218 NORTH LEE STREET, SUITE 312, ALEXANDRIA, VA, 22314) AND WTCA (WOOD TRUSS COUNCIL OF AMERICA, 6300 ENTERPRISE LANE, MADISON, WI 53719) FOR SAFETY PRACTICES PRIOR TO PERFORMING THESE FUNCTIONS. UNLESS OTHERWISE INDICATED TOP CHORD SHALL HAVE PROPERLY ATTACHED STRUCTURAL PANELS AND BOTTOM CHORD SHALL HAVE A PROPERLY ATTACHED RIGID CEILING.

IMPORTANTFURNISH A COPY OF THIS DESIGN TO THE INSTALLATION CONTRACTOR. ITW BCG, INC. SHALL NOT BE RESPONSIBLE FOR ANY DEVIATION FROM THIS DESIGN; ANY FAILURE TO BUILD THE TRUSS IN CONFORMANCE WITH TPI; OR FABRICATING, HANDLING, SHIPPING, INSTALLING & BRACING OF TRUSSES. DESIGN CONFORMS WITH APPLICABLE PROVISIONS OF NDS (NATIONAL DESIGN SPEC. BY AF&PA) AND TPI. ITW BCG CONNECTOR PLATES ARE MADE OF 20/18/16GA (W,H/SS/K) ASTM A653 GRADE 40/60 (W, K/H,SS) GALV. STEEL. APPLY PLATES TO EACH FACE OF TRUSS AND, UNLESS OTHERWISE LOCATED ON THIS DESIGN, POSITION PER DRAWINGS 16DA-Z. ANY INSPECTION OF PLATES FOLLOWED BY (1) SHALL BE PER ANNEX A3 OF TPI1-2002 SEC.3. A SEAL ON THIS DRAWING INDICATES ACCEPTANCE OF PROFESSIONAL ENGINEERING RESPONSIBILITY SOLELY FOR THE TRUSS COMPONENT DESIGN SHOWN. THE SUITABILITY AND USE OF THIS COMPONENT FOR ANY BUILDING IS THE RESPONSIBILITY OF THE BUILDING DESIGNER PER ANSI/TPI 1 SEC. 2.

DOUGLAS FLEMING LICENSE No. 66648 STATE OF FLORIDA PROFESSIONAL ENGINEER

[illegible]g 20 '09

TC LL	20.0 PSF	REF R8228- 19909
TC DL	10.0 PSF	DATE 08/20/09
BC DL	10.0 PSF	DRW HCUSR8228 09232018
BC LL	0.0 PSF	HC-ENG DF/DF
TOT.LD.	40.0 PSF	SEQN- 9266
DUR.FAC.	1.25	FROM AH
SPACING	24.0"	JREF- 1TUD8228Z01

(9-070--Freeman Design Group Hudson -- , ** - J5B)

Top chord 2x4 SP #2 Dense
Bot chord 2x4 SP #2 Dense

Roof overhang supports 2.00 psf soffit load.

Bottom chord checked for 10.00 psf non-concurrent live load.

110 mph wind, 15.00 ft mean hgt, ASCE 7-05, PART._ENC. bldg, not located within 4.50 ft from roof edge, CAT II, EXP B, wind TC DL=5.0 psf, wind BC DL=5.0 psf. Iw=1.00 GCpi(+/-)=0.55

Wind reactions based on MWFRS pressures.

Deflection meets L/240 live and L/180 total load.

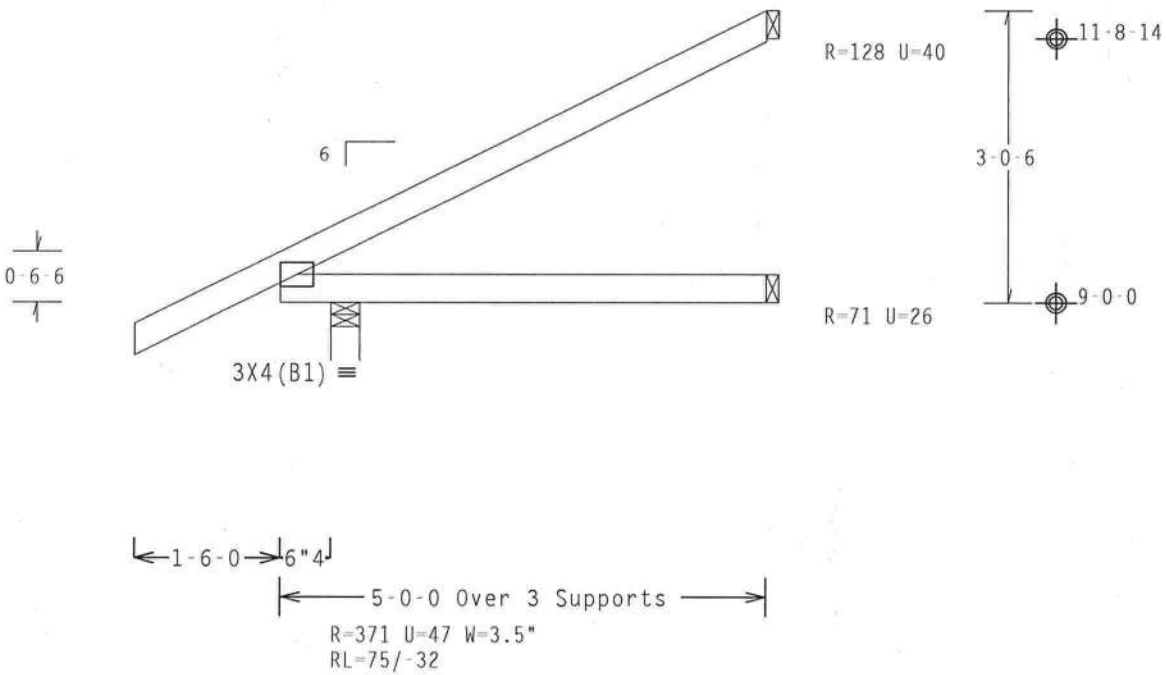

Design Crit: FBC2007Res/TPI-2002(STD)

PLT TYP. Wave FT/RT=10%(0%)/0(0) 8.07.00 QTY:1 FL/-/4/-/-/R/- Scale =.5"/Ft.

ALPINE
ITW Building Components Group Inc.
Haines City, FL 33844
FL C[illegible]278

WARNING TRUSSES REQUIRE EXTREME CARE IN FABRICATION, HANDLING, SHIPPING, INSTALLING AND BRACING. REFER TO BCSI (BUILDING COMPONENT SAFETY INFORMATION), PUBLISHED BY TPI (TRUSS PLATE INSTITUTE, 218 NORTH LEE STREET, SUITE 312, ALEXANDRIA, VA, 22314) AND WTCA (WOOD TRUSS COUNCIL OF AMERICA, 6300 ENTERPRISE LANE, MADISON, WI 53719) FOR SAFETY PRACTICES PRIOR TO PERFORMING THESE FUNCTIONS. UNLESS OTHERWISE INDICATED TOP CHORD SHALL HAVE PROPERLY ATTACHED STRUCTURAL PANELS AND BOTTOM CHORD SHALL HAVE A PROPERLY ATTACHED RIGID CEILING.

IMPORTANTFURNISH A COPY OF THIS DESIGN TO THE INSTALLATION CONTRACTOR. ITW BCG, INC. SHALL NOT BE RESPONSIBLE FOR ANY DEVIATION FROM THIS DESIGN; ANY FAILURE TO BUILD THE TRUSS IN COMFORMANCE WITH TPI; OR FABRICATING, HANDLING, SHIPPING, INSTALLING & BRACING OF TRUSSES. DESIGN CONFORMS WITH APPLICABLE PROVISIONS OF NDS (NATIONAL DESIGN SPEC, BY AF&PA) AND TPI. ITW BCG CONNECTOR PLATES ARE MADE OF 20/18/16GA (W,H/SS/K) ASTM A653 GRADE 40/60 (W, K/H,SS) GALV. STEEL. APPLY PLATES TO EACH FACE OF TRUSS AND, UNLESS OTHERWISE LOCATED ON THIS DESIGN, POSITION PER DRAWINGS 160A-Z. ANY INSPECTION OF PLATES FOLLOWED BY (1) SHALL BE PER ANNEX A3 OF TPI1-2002 SEC.3. A SEAL ON THIS DRAWING INDICATES ACCEPTANCE OF PROFESSIONAL ENGINEERING RESPONSIBILITY SOLELY FOR THE TRUSS COMPONENT DESIGN SHOWN. THE SUITABILITY AND USE OF THIS COMPONENT FOR ANY BUILDING IS THE RESPONSIBILITY OF THE BUILDING DESIGNER PER ANSI/TPI 1 SEC. 2.

DOUGLAS FLEMING LICENSE No. 66648 STATE OF FLORIDA PROFESSIONAL ENGINEER
[illegible]20 '09

TC LL	20.0 PSF	REF	R8228- 19910
TC DL	10.0 PSF	DATE	08/20/09
BC DL	10.0 PSF	DRW	HCUSR8228 09232023
BC LL	0.0 PSF	HC-ENG	DF/DF
TOT.LD.	40.0 PSF	SEQN-	9272
DUR.FAC.	1.25	FROM	AH
SPACING	24.0"	JREF-	1TUD8228Z01

(9-070--Freeman Design Group Hudson -- , ** - J1C)

Top chord 2x4 SP #2 Dense
Bot chord 2x4 SP #2 Dense

110 mph wind, 15.00 ft mean hgt, ASCE 7-05, PART._ENC. bldg, Located anywhere in roof, CAT II, EXP B, wind TC DL=5.0 psf, wind BC DL=5.0 psf. Iw=1.00 GCpi(+/-)=0.55

Bottom chord checked for 10.00 psf non-concurrent live load.

Provide (2)16d (0.162"x3.5") nails toe-nailed at top chord.
Provide (3)16d (0.162"x3.5") nails toe-nailed at bottom chord.

Negative reaction(s) of -385# MAX. (See below) from a non-wind load case requires uplift connection.

Wind reactions based on MWFRS pressures.

Roof overhang supports 2.00 psf soffit load.

Deflection meets L/240 live and L/180 total load.

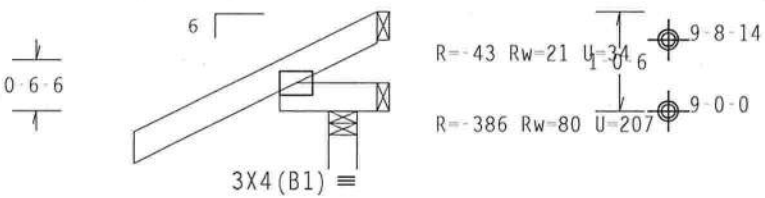

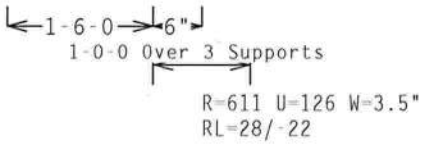

Design Crit: FBC2007Res/TPI-2002(STD)

PLT TYP. Wave | FT/RT=10%(0%)/0(0) | 8.07.00 | QTY:1 | FL/-/4/-/-/R/- | Scale =.5"/Ft.

ALPINE
ITW Building Components Group Inc.
Haines City, FL 33844
FL C[illegible]078

DOUGLAS FLEMING LICENSE No. 66648 STATE OF FLORIDA PROFESSIONAL ENGINEER
[illegible]20 '09

TC LL	20.0 PSF	REF	R8228- 19911
TC DL	10.0 PSF	DATE	08/20/09
BC DL	10.0 PSF	DRW	HCUSR8228 09232037
BC LL	0.0 PSF	HC-ENG	DF/DF
TOT.LD.	40.0 PSF	SEQN-	9275
DUR.FAC.	1.25	FROM	AH
SPACING	24.0"	JREF-	1TUD8228Z01

(9-070--Freeman Design Group Hudson -- , ** - J3C)

Top chord 2x4 SP #2 Dense
Bot chord 2x4 SP #2 Dense

Roof overhang supports 2.00 psf soffit load.

Bottom chord checked for 10.00 psf non-concurrent live load.

110 mph wind, 15.00 ft mean hgt, ASCE 7-05, PART._ENC. bldg, Located anywhere in roof, CAT II, EXP B, wind TC DL=5.0 psf, wind BC DL=5.0 psf. Iw=1.00 GCpi(+/-)=0.55

Wind reactions based on MWFRS pressures.

Deflection meets L/240 live and L/180 total load.

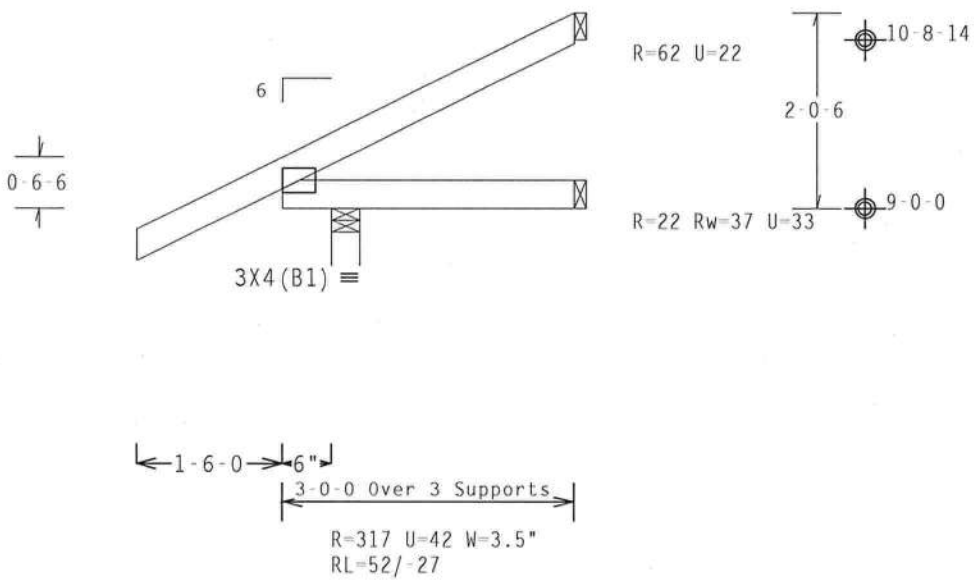

Design Crit: FBC2007Res/TPI-2002(STD)

PLT TYP. Wave FT/RT=10%(0%)/0(0) 8.07.00 QTY:1 FL/-/4/-/-/R/- Scale =.5"/Ft.

ALPINE
ITW Building Components Group Inc.
Haines City, FL 33844
FL COA #0278

WARNING TRUSSES REQUIRE EXTREME CARE IN FABRICATION, HANDLING, SHIPPING, INSTALLING AND BRACING. REFER TO BCSI (BUILDING COMPONENT SAFETY INFORMATION), PUBLISHED BY TPI (TRUSS PLATE INSTITUTE, 218 NORTH LEE STREET, SUITE 312, ALEXANDRIA, VA, 22314) AND WTCA (WOOD TRUSS COUNCIL OF AMERICA, 6300 ENTERPRISE LANE, MADISON, WI 53719) FOR SAFETY PRACTICES PRIOR TO PERFORMING THESE FUNCTIONS. UNLESS OTHERWISE INDICATED TOP CHORD SHALL HAVE PROPERLY ATTACHED STRUCTURAL PANELS AND BOTTOM CHORD SHALL HAVE A PROPERLY ATTACHED RIGID CEILING.

IMPORTANT FURNISH A COPY OF THIS DESIGN TO THE INSTALLATION CONTRACTOR. ITW BCG, INC. SHALL NOT BE RESPONSIBLE FOR ANY DEVIATION FROM THIS DESIGN; ANY FAILURE TO BUILD THE TRUSS IN CONFORMANCE WITH TPI; OR FABRICATING, HANDLING, SHIPPING, INSTALLING & BRACING OF TRUSSES. DESIGN CONFORMS WITH APPLICABLE PROVISIONS OF NDS (NATIONAL DESIGN SPEC. BY AF&PA) AND TPI. ITW BCG CONNECTOR PLATES ARE MADE OF 20/18/16GA (W,H/SS/K) ASTM A653 GRADE 40/60 (W, K/H,SS) GALV. STEEL. APPLY PLATES TO EACH FACE OF TRUSS AND, UNLESS OTHERWISE LOCATED ON THIS DESIGN, POSITION PER DRAWINGS 160A-Z. ANY INSPECTION OF PLATES FOLLOWED BY (1) SHALL BE PER ANNEX A3 OF TPI1-2002 SEC.3. A SEAL ON THIS DRAWING INDICATES ACCEPTANCE OF PROFESSIONAL ENGINEERING RESPONSIBILITY SOLELY FOR THE TRUSS COMPONENT DESIGN SHOWN. THE SUITABILITY AND USE OF THIS COMPONENT FOR ANY BUILDING IS THE RESPONSIBILITY OF THE BUILDING DESIGNER PER ANSI/TPI 1 SEC. 2.

DOUGLAS FLEMING LICENSE No. 66648 STATE OF FLORIDA PROFESSIONAL ENGINEER
AUG 20 '09

TC LL	20.0 PSF	REF R8228- 19912
TC DL	10.0 PSF	DATE 08/20/09
BC DL	10.0 PSF	DRW HCUSR8228 09232036
BC LL	0.0 PSF	HC-ENG DF/DF
TOT.LD.	40.0 PSF	SEQN- 9278
DUR.FAC.	1.25	FROM AH
SPACING	24.0"	JREF- 1TUD8228Z01

(9-070--Freeman Design Group Hudson -- , ** - J5C)

Top chord 2x4 SP #2 Dense
Bot chord 2x4 SP #2 Dense

Roof overhang supports 2.00 psf soffit load.

Bottom chord checked for 10.00 psf non-concurrent live load.

110 mph wind, 15.00 ft mean hgt, ASCE 7-05, PART. ENC. bldg, not located within 4.50 ft from roof edge, CAT II, EXP B, wind TC DL=5.0 psf, wind BC DL=5.0 psf. Iw=1.00 GCpi(+/-)=0.55

Wind reactions based on MWFRS pressures.

Deflection meets L/240 live and L/180 total load.

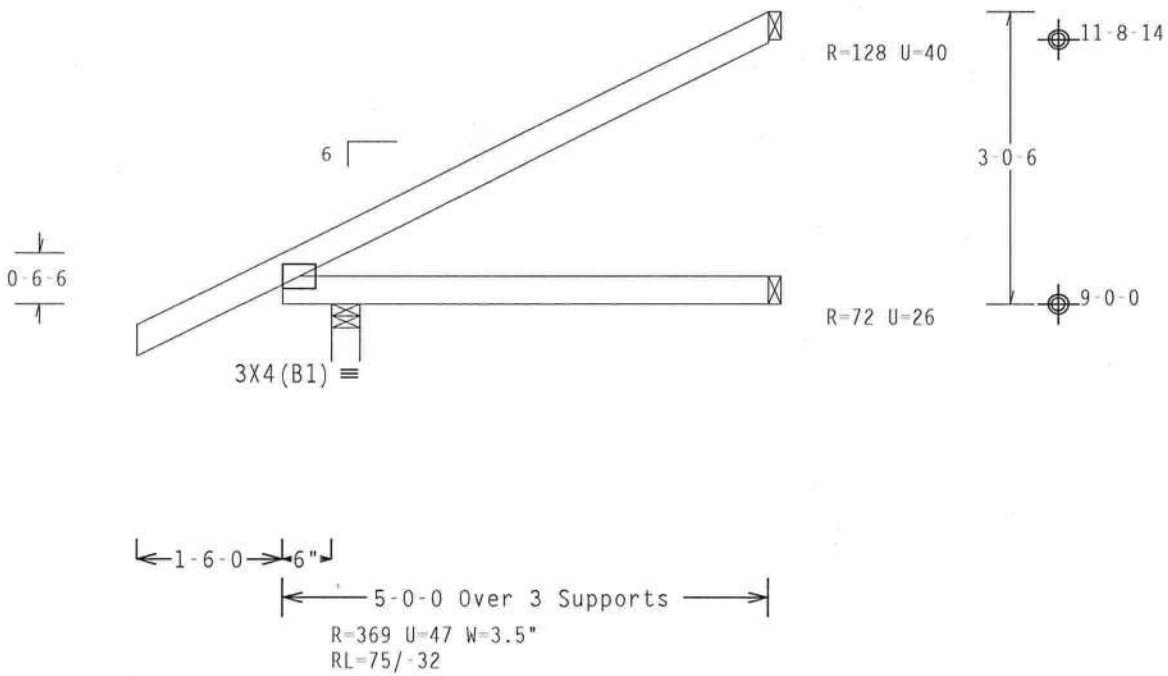

Design Crit: FBC2007Res/TPI-2002(STD)

PLT TYP. Wave | FT/RT=10%(0%)/0(0) | 8.07.00 | QTY:1 | FL/-/4/-/-/R/- | Scale =.5"/Ft.

ALPINE
ITW Building Components Group Inc.
Haines City, FL 33844
FL COA #0278

WARNING TRUSSES REQUIRE EXTREME CARE IN FABRICATION, HANDLING, SHIPPING, INSTALLING AND BRACING. REFER TO BCSI (BUILDING COMPONENT SAFETY INFORMATION), PUBLISHED BY TPI (TRUSS PLATE INSTITUTE, 218 NORTH LEE STREET, SUITE 312, ALEXANDRIA, VA, 22314) AND WTCA (WOOD TRUSS COUNCIL OF AMERICA, 6300 ENTERPRISE LANE, MADISON, WI 53719) FOR SAFETY PRACTICES PRIOR TO PERFORMING THESE FUNCTIONS. UNLESS OTHERWISE INDICATED TOP CHORD SHALL HAVE PROPERLY ATTACHED STRUCTURAL PANELS AND BOTTOM CHORD SHALL HAVE A PROPERLY ATTACHED RIGID CEILING.

IMPORTANT FURNISH A COPY OF THIS DESIGN TO THE INSTALLATION CONTRACTOR. ITW BCG, INC. SHALL NOT BE RESPONSIBLE FOR ANY DEVIATION FROM THIS DESIGN; ANY FAILURE TO BUILD THE TRUSS IN CONFORMANCE WITH TPI; OR FABRICATING, HANDLING, SHIPPING, INSTALLING & BRACING OF TRUSSES. DESIGN CONFORMS WITH APPLICABLE PROVISIONS OF NDS (NATIONAL DESIGN SPEC. BY AF&PA) AND TPI. ITW BCG CONNECTOR PLATES ARE MADE OF 20/18/16GA (W,H/SS/K) ASTM A653 GRADE 40/60 (W, K/H,SS) GALV. STEEL. APPLY PLATES TO EACH FACE OF TRUSS AND, UNLESS OTHERWISE LOCATED ON THIS DESIGN, POSITION PER DRAWINGS 160A-Z. ANY INSPECTION OF PLATES FOLLOWED BY (1) SHALL BE PER ANNEX A3 OF TPI1-2002 SEC.3. A SEAL ON THIS DRAWING INDICATES ACCEPTANCE OF PROFESSIONAL ENGINEERING RESPONSIBILITY SOLELY FOR THE TRUSS COMPONENT DESIGN SHOWN. THE SUITABILITY AND USE OF THIS COMPONENT FOR ANY BUILDING IS THE RESPONSIBILITY OF THE BUILDING DESIGNER PER ANSI/TPI 1 SEC. 2.

DOUGLAS FLEMING LICENSE No. 66648 STATE OF FLORIDA PROFESSIONAL ENGINEER
Aug 20 '09

TC LL	20.0 PSF	REF	R8228- 19913
TC DL	10.0 PSF	DATE	08/20/09
BC DL	10.0 PSF	DRW	HCUSR8228 09232035
BC LL	0.0 PSF	HC-ENG	DF/DF
TOT.LD.	40.0 PSF	SEQN-	9281
DUR.FAC.	1.25	FROM	AH
SPACING	24.0"	JREF-	1TUD8228Z01

(9-070--Freeman Design Group Hudson -- , ** - J1D)

Top chord 2x4 SP #2 Dense
Bot chord 2x4 SP #2 Dense

Bottom chord checked for 10.00 psf non-concurrent live load.

Deflection meets L/240 live and L/180 total load.

110 mph wind, 15.00 ft mean hgt, ASCE 7-05, PART._ENC. bldg, Located anywhere in roof, CAT II, EXP B, wind TC DL=5.0 psf, wind BC DL=5.0 psf. Iw=1.00 GCpi(+/-)=0.55

Wind reactions based on MWFRS pressures.

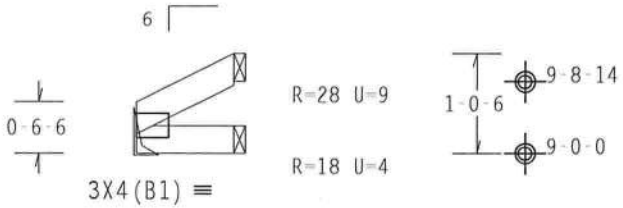

1-0-0 Over 3 Supports

R=45 U=3

Design Crit: FBC2007Res/TPI-2002(STD)

PLT TYP. Wave FT/RT=10%(0%)/0(0) 8.07.00.1 [illegible] QTY:1 FL/-/4/-/-/R/- Scale =.5"/Ft.

ALPINE
ITW Building Components Group Inc.
Haines City, FL 33844
FL C[illegible]78

WARNING TRUSSES REQUIRE EXTREME CARE IN FABRICATION, HANDLING, SHIPPING, INSTALLING AND BRACING. REFER TO BCSI (BUILDING COMPONENT SAFETY INFORMATION), PUBLISHED BY TPI (TRUSS PLATE INSTITUTE, 218 NORTH LEE STREET, SUITE 312, ALEXANDRIA, VA. 22314) AND WTCA (WOOD TRUSS COUNCIL OF AMERICA, 6300 ENTERPRISE LANE, MADISON, WI 53719) FOR SAFETY PRACTICES PRIOR TO PERFORMING THESE FUNCTIONS. UNLESS OTHERWISE INDICATED TOP CHORD SHALL HAVE PROPERLY ATTACHED STRUCTURAL PANELS AND BOTTOM CHORD SHALL HAVE A PROPERLY ATTACHED RIGID CEILING.

IMPORTANTFURNISH A COPY OF THIS DESIGN TO THE INSTALLATION CONTRACTOR. ITW BCG, INC. SHALL NOT BE RESPONSIBLE FOR ANY DEVIATION FROM THIS DESIGN; ANY FAILURE TO BUILD THE TRUSS IN COMFORMANCE WITH TPI; OR FABRICATING, HANDLING, SHIPPING, INSTALLING & BRACING OF TRUSSES.
DESIGN CONFORMS WITH APPLICABLE PROVISIONS OF NDS (NATIONAL DESIGN SPEC. BY AF&PA) AND TPI. ITW BCG CONNECTOR PLATES ARE MADE OF 20/18/16GA (W,H/SS/K) ASTM A653 GRADE 40/60 (W, K/H,SS) GALV. STEEL. APPLY PLATES TO EACH FACE OF TRUSS AND, UNLESS OTHERWISE LOCATED ON THIS DESIGN, POSITION PER DRAWINGS 160A-Z. ANY INSPECTION OF PLATES FOLLOWED BY (1) SHALL BE PER ANNEX A3 OF TPI1-2002 SEC.3. A SEAL ON THIS DRAWING INDICATES ACCEPTANCE OF PROFESSIONAL ENGINEERING RESPONSIBILITY SOLELY FOR THE TRUSS COMPONENT DESIGN SHOWN. THE SUITABILITY AND USE OF THIS COMPONENT FOR ANY BUILDING IS THE RESPONSIBILITY OF THE BUILDING DESIGNER PER ANSI/TPI 1 SEC. 2.

DOUGLAS FLEMING LICENSE No. 66648 STATE OF FLORIDA PROFESSIONAL ENGINEER
[illegible]20 '09

TC LL	20.0 PSF	REF	R8228- 19914
TC DL	10.0 PSF	DATE	08/20/09
BC DL	10.0 PSF	DRW	HCUSR8228 09232033
BC LL	0.0 PSF	HC-ENG	DF/DF
TOT.LD.	40.0 PSF	SEQN-	9284
DUR.FAC.	1.25	FROM	AH
SPACING	24.0"	JREF-	1TUD8228Z01

Top chord 2x4 SP #2 Dense
Bot chord 2x4 SP #2 Dense

Bottom chord checked for 10.00 psf non-concurrent live load.

Deflection meets L/240 live and L/180 total load.

110 mph wind, 15.00 ft mean hgt, ASCE 7-05, PART._ENC. bldg, Located anywhere in roof, CAT II, EXP B, wind TC DL=5.0 psf, wind BC DL=5.0 psf. Iw=1.00 GCpi(+/-)=0.55

Wind reactions based on MWFRS pressures.

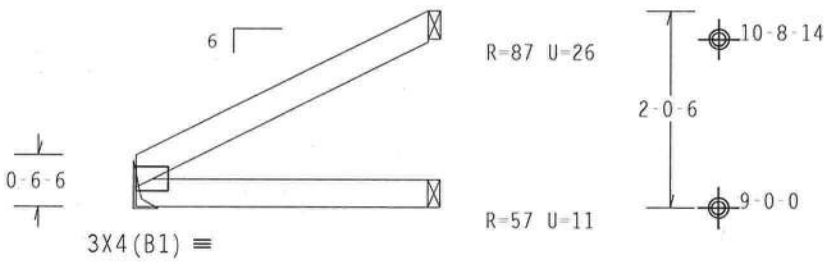

3-0-0 Over 3 Supports

R=127 U=15
RL=34

Design Crit: FBC2007Res/TPI-2002(STD)

PLT TYP. Wave FT/RT=10%(0%)/0(0) 8.07.00 QTY:1 FL/-/4/-/-/R/- Scale =.5"/Ft.

ALPINE
ITW Building Components Group Inc.
Haines City, FL 33844
FL COA #0278

WARNING TRUSSES REQUIRE EXTREME CARE IN FABRICATION, HANDLING, SHIPPING, INSTALLING AND BRACING. REFER TO BCSI (BUILDING COMPONENT SAFETY INFORMATION), PUBLISHED BY TPI (TRUSS PLATE INSTITUTE, 218 NORTH LEE STREET, SUITE 312, ALEXANDRIA, VA, 22314) AND WTCA (WOOD TRUSS COUNCIL OF AMERICA, 6300 ENTERPRISE LANE, MADISON, WI 53719) FOR SAFETY PRACTICES PRIOR TO PERFORMING THESE FUNCTIONS. UNLESS OTHERWISE INDICATED TOP CHORD SHALL HAVE PROPERLY ATTACHED STRUCTURAL PANELS AND BOTTOM CHORD SHALL HAVE A PROPERLY ATTACHED RIGID CEILING.

IMPORTANTFURNISH A COPY OF THIS DESIGN TO THE INSTALLATION CONTRACTOR. ITW BCG, INC. SHALL NOT BE RESPONSIBLE FOR ANY DEVIATION FROM THIS DESIGN; ANY FAILURE TO BUILD THE TRUSS IN CONFORMANCE WITH TPI; OR FABRICATING, HANDLING, SHIPPING, INSTALLING & BRACING OF TRUSSES. DESIGN CONFORMS WITH APPLICABLE PROVISIONS OF NDS (NATIONAL DESIGN SPEC, BY AF&PA) AND TPI. ITW BCG CONNECTOR PLATES ARE MADE OF 20/18/16GA (W,H/SS/K) ASTM A653 GRADE 40/60 (W, K/H,SS) GALV. STEEL. APPLY PLATES TO EACH FACE OF TRUSS AND, UNLESS OTHERWISE LOCATED ON THIS DESIGN, POSITION PER DRAWINGS 160A-Z. ANY INSPECTION OF PLATES FOLLOWED BY (1) SHALL BE PER ANNEX A3 OF TPI1-2002 SEC.3. A SEAL ON THIS DRAWING INDICATES ACCEPTANCE OF PROFESSIONAL ENGINEERING RESPONSIBILITY SOLELY FOR THE TRUSS COMPONENT DESIGN SHOWN. THE SUITABILITY AND USE OF THIS COMPONENT FOR ANY BUILDING IS THE RESPONSIBILITY OF THE BUILDING DESIGNER PER ANSI/TPI 1 SEC. 2.

DOUGLAS FLEMING LICENSE No. 66648 STATE OF FLORIDA PROFESSIONAL ENGINEER

Aug 20 '09

TC LL	20.0 PSF	REF	R8228- 19915
TC DL	10.0 PSF	DATE	08/20/09
BC DL	10.0 PSF	DRW	HCUSR8228 09232032
BC LL	0.0 PSF	HC-ENG	DF/DF
TOT.LD.	40.0 PSF	SEQN-	9288
DUR.FAC.	1.25	FROM	AH
SPACING	24.0"	JREF-	1TUD8228Z01

(9-070--Freeman Design Group Hudson -- , ** - J5D)

Top chord 2x4 SP #2 Dense
Bot chord 2x4 SP #2 Dense

Bottom chord checked for 10.00 psf non-concurrent live load.

Deflection meets L/240 live and L/180 total load.

110 mph wind, 15.00 ft mean hgt, ASCE 7-05, PART._ENC. bldg, not located within 4.50 ft from roof edge, CAT II, EXP B, wind TC DL=5.0 psf, wind BC DL=5.0 psf. Iw=1.00 GCpi(+/-)=0.55

Wind reactions based on MWFRS pressures.

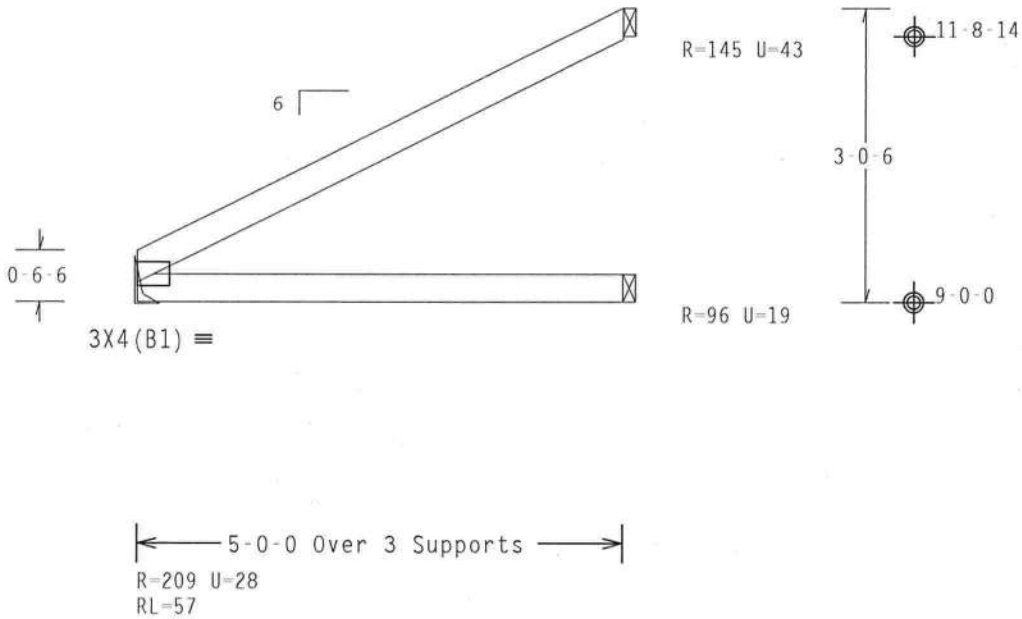

Design Crit: FBC2007Res/TPI-2002(STD)

PLT TYP. Wave | FT/RT=10%(0%)/0(0) | 8.07.00 | QTY:1 | FL/-/4/-/-/R/- | Scale =.5"/Ft.

ALPINE
ITW Building Components Group Inc.
Haines City, FL 33844
FL C[illegible]78

WARNING TRUSSES REQUIRE EXTREME CARE IN FABRICATION, HANDLING, SHIPPING, INSTALLING AND BRACING. REFER TO BCSI (BUILDING COMPONENT SAFETY INFORMATION), PUBLISHED BY TPI (TRUSS PLATE INSTITUTE, 218 NORTH LEE STREET, SUITE 312, ALEXANDRIA, VA, 22314) AND WTCA (WOOD TRUSS COUNCIL OF AMERICA, 6300 ENTERPRISE LANE, MADISON, WI 53719) FOR SAFETY PRACTICES PRIOR TO PERFORMING THESE FUNCTIONS. UNLESS OTHERWISE INDICATED TOP CHORD SHALL HAVE PROPERLY ATTACHED STRUCTURAL PANELS AND BOTTOM CHORD SHALL HAVE A PROPERLY ATTACHED RIGID CEILING.

IMPORTANT FURNISH A COPY OF THIS DESIGN TO THE INSTALLATION CONTRACTOR. ITW BCG, INC. SHALL NOT BE RESPONSIBLE FOR ANY DEVIATION FROM THIS DESIGN; ANY FAILURE TO BUILD THE TRUSS IN COMFORMANCE WITH TPI; OR FABRICATING, HANDLING, SHIPPING, INSTALLING & BRACING OF TRUSSES. DESIGN CONFORMS WITH APPLICABLE PROVISIONS OF NDS (NATIONAL DESIGN SPEC, BY AF&PA) AND TPI. ITW BCG CONNECTOR PLATES ARE MADE OF 20/18/16GA (W,H/SS/K) ASTM A653 GRADE 40/60 (W, K/H,SS) GALV. STEEL. APPLY PLATES TO EACH FACE OF TRUSS AND, UNLESS OTHERWISE LOCATED ON THIS DESIGN, POSITION PER DRAWINGS 160A-Z. ANY INSPECTION OF PLATES FOLLOWED BY (1) SHALL BE PER ANNEX A3 OF TPI1-2002 SEC.3. A SEAL ON THIS DRAWING INDICATES ACCEPTANCE OF PROFESSIONAL ENGINEERING RESPONSIBILITY SOLELY FOR THE TRUSS COMPONENT DESIGN SHOWN. THE SUITABILITY AND USE OF THIS COMPONENT FOR ANY BUILDING IS THE RESPONSIBILITY OF THE BUILDING DESIGNER PER ANSI/TPI 1 SEC. 2.

DOUGLAS FLEMING LICENSE No. 66648 STATE OF FLORIDA PROFESSIONAL ENGINEER
[illegible] 20 '09

TC LL	20.0 PSF	REF	R8228- 19916
TC DL	10.0 PSF	DATE	08/20/09
BC DL	10.0 PSF	DRW	HCUSR8228 09232029
BC LL	0.0 PSF	HC-ENG	DF/DF
TOT.LD.	40.0 PSF	SEQN-	9292
DUR.FAC.	1.25	FROM	AH
SPACING	24.0"	JREF-	1TUD8228Z01

(9-070--Freeman Design Group Hudson -- , ** - EJ7B)

Top chord 2x4 SP #2 Dense
Bot chord 2x4 SP #2 Dense

Roof overhang supports 2.00 psf soffit load.

Bottom chord checked for 10.00 psf non-concurrent live load.

110 mph wind, 15.00 ft mean hgt, ASCE 7-05, PART. ENC. bldg, not located within 4.50 ft from roof edge, CAT II, EXP B, wind TC DL=5.0 psf, wind BC DL=5.0 psf. Iw=1.00 GCpi(+/-)=0.55

Wind reactions based on MWFRS pressures.

Deflection meets L/240 live and L/180 total load.

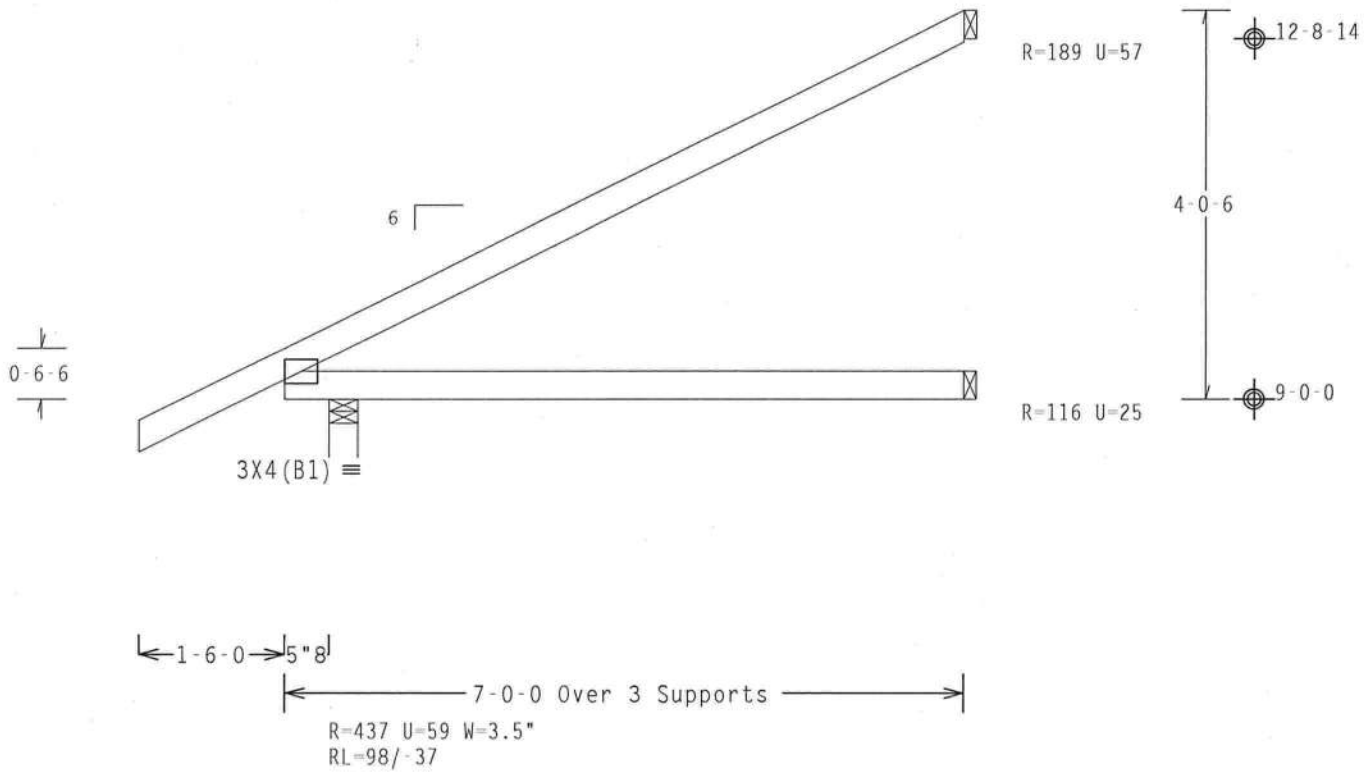

Design Crit: FBC2007Res/TPI-2002(STD)

PLT TYP. Wave | FT/RT=10%(0%)/0(0) | 8.07.00 | QTY:3 | FL/-/4/-/-/R/- | Scale =.5"/Ft.

ALPINE
ITW Building Components Group Inc.
Haines City, FL 33844
FL C[illegible]78

WARNING TRUSSES REQUIRE EXTREME CARE IN FABRICATION, HANDLING, SHIPPING, INSTALLING AND BRACING. REFER TO BCSI (BUILDING COMPONENT SAFETY INFORMATION), PUBLISHED BY TPI (TRUSS PLATE INSTITUTE, 218 NORTH LEE STREET, SUITE 312, ALEXANDRIA, VA. 22314) AND WTCA (WOOD TRUSS COUNCIL OF AMERICA, 6300 ENTERPRISE LANE, MADISON, WI 53719) FOR SAFETY PRACTICES PRIOR TO PERFORMING THESE FUNCTIONS. UNLESS OTHERWISE INDICATED TOP CHORD SHALL HAVE PROPERLY ATTACHED STRUCTURAL PANELS AND BOTTOM CHORD SHALL HAVE A PROPERLY ATTACHED RIGID CEILING.

IMPORTANT FURNISH A COPY OF THIS DESIGN TO THE INSTALLATION CONTRACTOR. ITW BCG, INC. SHALL NOT BE RESPONSIBLE FOR ANY DEVIATION FROM THIS DESIGN; ANY FAILURE TO BUILD THE TRUSS IN COMFORMANCE WITH TPI; OR FABRICATING, HANDLING, SHIPPING, INSTALLING & BRACING OF TRUSSES. DESIGN CONFORMS WITH APPLICABLE PROVISIONS OF NDS (NATIONAL DESIGN SPEC. BY AF&PA) AND TPI. ITW BCG CONNECTOR PLATES ARE MADE OF 20/18/16GA (W,H/SS/K) ASTM A653 GRADE 40/60 (W, K/H,SS) GALV. STEEL. APPLY PLATES TO EACH FACE OF TRUSS AND, UNLESS OTHERWISE LOCATED ON THIS DESIGN, POSITION PER DRAWINGS 160A-Z. ANY INSPECTION OF PLATES FOLLOWED BY (1) SHALL BE PER ANNEX A3 OF TPI1-2002 SEC.3. A SEAL ON THIS DRAWING INDICATES ACCEPTANCE OF PROFESSIONAL ENGINEERING RESPONSIBILITY SOLELY FOR THE TRUSS COMPONENT DESIGN SHOWN. THE SUITABILITY AND USE OF THIS COMPONENT FOR ANY BUILDING IS THE RESPONSIBILITY OF THE BUILDING DESIGNER PER ANSI/TPI 1 SEC. 2.

DOUGLAS FLEMING LICENSE No. 66648 STATE OF FLORIDA PROFESSIONAL ENGINEER
[illegible] 20 '09

TC LL	20.0 PSF	REF	R8228- 19917
TC DL	10.0 PSF	DATE	08/20/09
BC DL	10.0 PSF	DRW	HCUSR8228 09232026
BC LL	0.0 PSF	HC-ENG	DF/DF
TOT.LD.	40.0 PSF	SEQN-	9296
DUR.FAC.	1.25	FROM	AH
SPACING	24.0"	JREF-	1TUD8228Z01

Top chord 2x4 SP #2 Dense
Bot chord 2x4 SP #2 Dense

Roof overhang supports 2.00 psf soffit load.

Bottom chord checked for 10.00 psf non-concurrent live load.

110 mph wind, 15.00 ft mean hgt, ASCE 7-05, PART. ENC. bldg, not located within 4.50 ft from roof edge, CAT II, EXP B, wind TC DL=5.0 psf, wind BC DL=5.0 psf. Iw=1.00 GCpi(+/-)=0.55

Wind reactions based on MWFRS pressures.

Deflection meets L/240 live and L/180 total load.

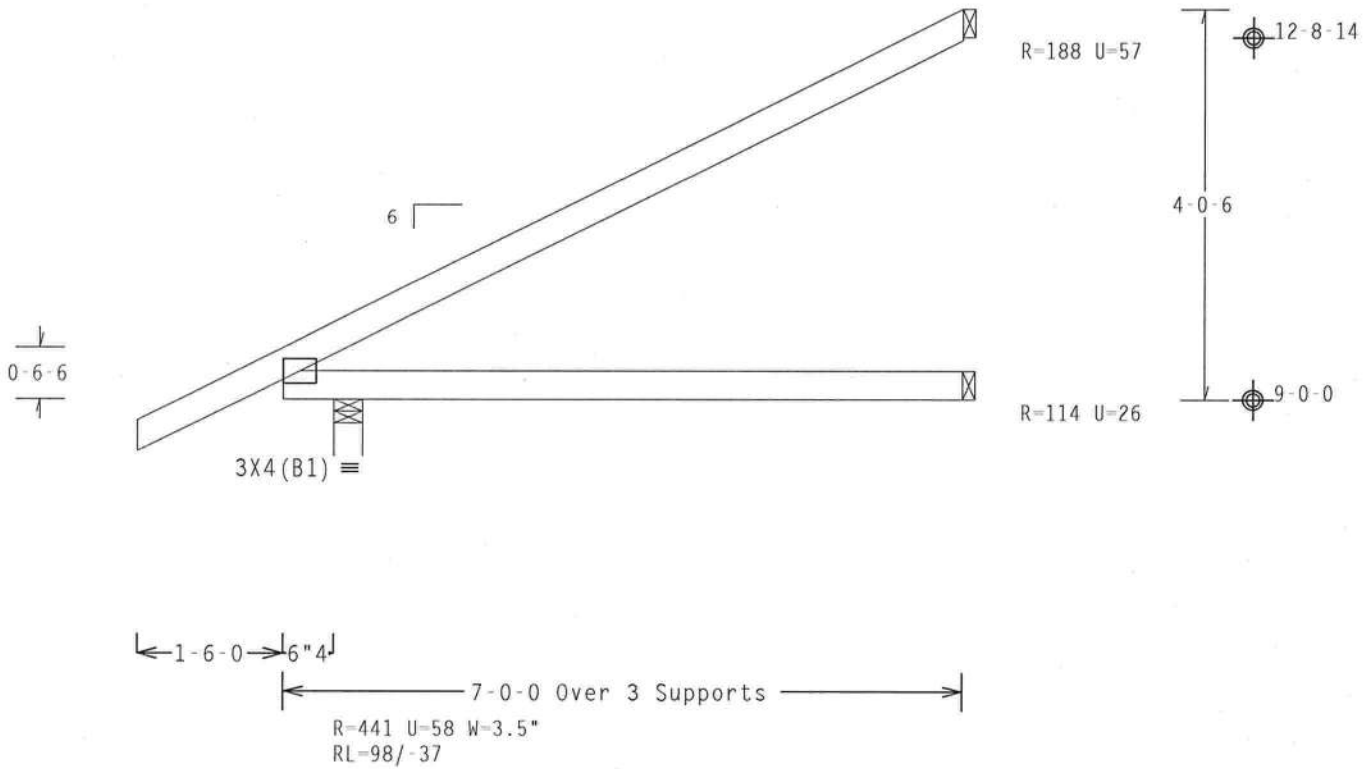

Design Crit: FBC2007Res/TPI-2002(STD)

PLT TYP. Wave FT/RT=10%(0%)/0(0) 8.07.00 QTY:1 FL/-/4/-/-/R/- Scale =.5"/Ft.

ALPINE
ITW Building Components Group Inc.
Haines City, FL 33844
FL Co[illegible]78

WARNING TRUSSES REQUIRE EXTREME CARE IN FABRICATION, HANDLING, SHIPPING, INSTALLING AND BRACING. REFER TO BCSI (BUILDING COMPONENT SAFETY INFORMATION), PUBLISHED BY TPI (TRUSS PLATE INSTITUTE, 218 NORTH LEE STREET, SUITE 312, ALEXANDRIA, VA, 22314) AND WTCA (WOOD TRUSS COUNCIL OF AMERICA, 6300 ENTERPRISE LANE, MADISON, WI 53719) FOR SAFETY PRACTICES PRIOR TO PERFORMING THESE FUNCTIONS. UNLESS OTHERWISE INDICATED TOP CHORD SHALL HAVE PROPERLY ATTACHED STRUCTURAL PANELS AND BOTTOM CHORD SHALL HAVE A PROPERLY ATTACHED RIGID CEILING.

IMPORTANTFURNISH A COPY OF THIS DESIGN TO THE INSTALLATION CONTRACTOR. ITW BCG, INC. SHALE NOT BE RESPONSIBLE FOR ANY DEVIATION FROM THIS DESIGN; ANY FAILURE TO BUILD THE TRUSS IN COMFORMANCE WITH TPI; OR FABRICATING, HANDLING, SHIPPING, INSTALLING & BRACING OF TRUSSES.
DESIGN CONFORMS WITH APPLICABLE PROVISIONS OF NDS (NATIONAL DESIGN SPEC, BY AF&PA) AND TPI. ITW BCG CONNECTOR PLATES ARE MADE OF 20/18/16GA (W,H/SS/K) ASTM A653 GRADE 40/60 (W, K/H,SS) GALV. STEEL. APPLY PLATES TO EACH FACE OF TRUSS AND, UNLESS OTHERWISE LOCATED ON THIS DESIGN, POSITION PER DRAWINGS 160A-Z. ANY INSPECTION OF PLATES FOLLOWED BY (I) SHALL BE PER ANNEX A3 OF TPI1-2002 SEC.3. A SEAL ON THIS DRAWING INDICATES ACCEPTANCE OF PROFESSIONAL ENGINEERING RESPONSIBILITY SOLELY FOR THE TRUSS COMPONENT DESIGN SHOWN. THE SUITABILITY AND USE OF THIS COMPONENT FOR ANY BUILDING IS THE RESPONSIBILITY OF THE BUILDING DESIGNER PER ANSI/TPI 1 SEC. 2.

DOUGLAS FLEMING LICENSE No. 66648 STATE OF FLORIDA PROFESSIONAL ENGINEER
[illegible] 20 '09

TC LL	20.0 PSF	REF R8228- 19918
TC DL	10.0 PSF	DATE 08/20/09
BC DL	10.0 PSF	DRW HCUSR8228 09232028
BC LL	0.0 PSF	HC-ENG DF/DF
TOT.LD.	40.0 PSF	SEQN- 9299
DUR.FAC.	1.25	FROM AH
SPACING	24.0"	JREF- 1TUD8228Z01

Top chord 2x4 SP #2 Dense
Bot chord 2x4 SP #2 Dense

Roof overhang supports 2.00 psf soffit load.

Bottom chord checked for 10.00 psf non-concurrent live load.

110 mph wind, 15.00 ft mean hgt, ASCE 7-05, PART. ENC. bldg, not located within 4.50 ft from roof edge, CAT II, EXP B, wind TC DL=5.0 psf, wind BC DL=5.0 psf. Iw=1.00 GCpi(+/-)=0.55

Wind reactions based on MWFRS pressures.

Deflection meets L/240 live and L/180 total load.

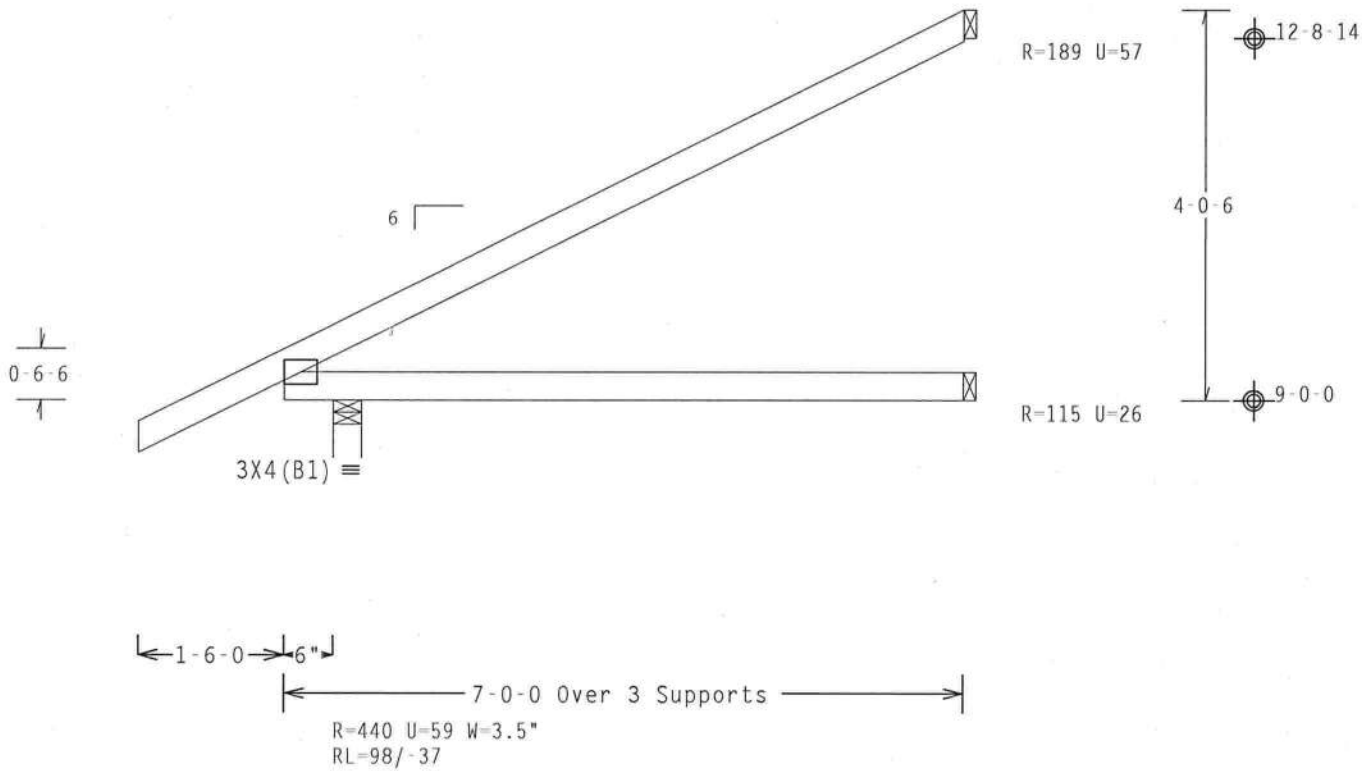

Design Crit: FBC2007Res/TPI-2002(STD)

PLT TYP. Wave | FT/RT=10%(0%)/0(0) | 8.07.00.1 | QTY:3 | FL/-/4/-/-/R/- | Scale =.5"/Ft.

ALPINE
ITW Building Components Group Inc.
Haines City, FL 33844
FL CO# [illegible]78

WARNING TRUSSES REQUIRE EXTREME CARE IN FABRICATION, HANDLING, SHIPPING, INSTALLING AND BRACING. REFER TO BCSI (BUILDING COMPONENT SAFETY INFORMATION), PUBLISHED BY TPI (TRUSS PLATE INSTITUTE, 218 NORTH LEE STREET, SUITE 312, ALEXANDRIA, VA. 22314) AND WTCA (WOOD TRUSS COUNCIL OF AMERICA, 6300 ENTERPRISE LANE, MADISON, WI 53719) FOR SAFETY PRACTICES PRIOR TO PERFORMING THESE FUNCTIONS. UNLESS OTHERWISE INDICATED TOP CHORD SHALL HAVE PROPERLY ATTACHED STRUCTURAL PANELS AND BOTTOM CHORD SHALL HAVE A PROPERLY ATTACHED RIGID CEILING.

IMPORTANTFURNISH A COPY OF THIS DESIGN TO THE INSTALLATION CONTRACTOR. ITW BCG, INC. SHALL NOT BE RESPONSIBLE FOR ANY DEVIATION FROM THIS DESIGN; ANY FAILURE TO BUILD THE TRUSS IN CONFORMANCE WITH TPI; OR FABRICATING, HANDLING, SHIPPING, INSTALLING & BRACING OF TRUSSES.
DESIGN CONFORMS WITH APPLICABLE PROVISIONS OF NDS (NATIONAL DESIGN SPEC. BY AF&PA) AND TPI. ITW BCG CONNECTOR PLATES ARE MADE OF 20/18/16GA (W,H/SS/K) ASTM A653 GRADE 40/60 (W, K/H,SS) GALV. STEEL. APPLY PLATES TO EACH FACE OF TRUSS AND, UNLESS OTHERWISE LOCATED ON THIS DESIGN, POSITION PER DRAWINGS 160A-Z. ANY INSPECTION OF PLATES FOLLOWED BY (1) SHALL BE PER ANNEX A3 OF TPI1-2002 SEC.3. A SEAL ON THIS DRAWING INDICATES ACCEPTANCE OF PROFESSIONAL ENGINEERING RESPONSIBILITY SOLELY FOR THE TRUSS COMPONENT DESIGN SHOWN. THE SUITABILITY AND USE OF THIS COMPONENT FOR ANY BUILDING IS THE RESPONSIBILITY OF THE BUILDING DESIGNER PER ANSI/TPI 1 SEC. 2.

DOUGLAS FLEMING LICENSE No. 66648 STATE OF FLORIDA PROFESSIONAL ENGINEER
[illegible] 20 '09

TC LL	20.0 PSF	REF	R8228- 19919
TC DL	10.0 PSF	DATE	08/20/09
BC DL	10.0 PSF	DRW	HCUSR8228 09232039
BC LL	0.0 PSF	HC-ENG	DF/DF
TOT.LD.	40.0 PSF	SEQN-	9302
DUR.FAC.	1.25	FROM	AH
SPACING	24.0"	JREF-	1TUD8228Z01

Top chord 2x4 SP #2 Dense
Bot chord 2x4 SP #2 Dense

Bottom chord checked for 10.00 psf non-concurrent live load.

Deflection meets L/240 live and L/180 total load.

110 mph wind, 15.00 ft mean hgt, ASCE 7-05, PART. ENC. bldg, not located within 4.50 ft from roof edge, CAT II, EXP B, wind TC DL=5.0 psf, wind BC DL=5.0 psf. Iw=1.00 GCpi(+/-)=0.55

Wind reactions based on MWFRS pressures.

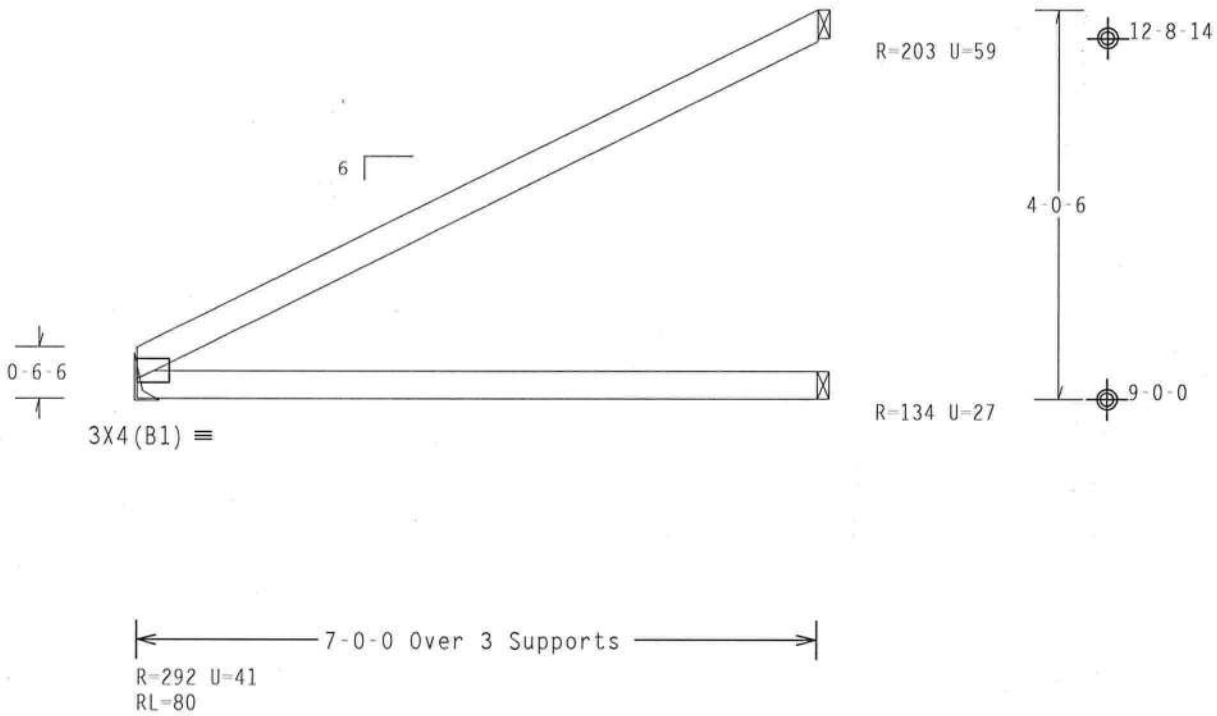

Design Crit: FBC2007Res/TPI-2002(STD)

PLT TYP. Wave | FT/RT=10%(0%)/0(0) | 8.07.00 | QTY:1 | FL/-/4/-/-/R/- | Scale =.5"/Ft.

ALPINE
ITW Building Components Group Inc.
Haines City, FL 33844
FL COA #0-278

WARNING TRUSSES REQUIRE EXTREME CARE IN FABRICATION, HANDLING, SHIPPING, INSTALLING AND BRACING. REFER TO BCSI (BUILDING COMPONENT SAFETY INFORMATION), PUBLISHED BY TPI (TRUSS PLATE INSTITUTE, 218 NORTH LEE STREET, SUITE 312, ALEXANDRIA, VA, 22314) AND WTCA (WOOD TRUSS COUNCIL OF AMERICA, 6300 ENTERPRISE LANE, MADISON, WI 53719) FOR SAFETY PRACTICES PRIOR TO PERFORMING THESE FUNCTIONS. UNLESS OTHERWISE INDICATED TOP CHORD SHALL HAVE PROPERLY ATTACHED STRUCTURAL PANELS AND BOTTOM CHORD SHALL HAVE A PROPERLY ATTACHED RIGID CEILING.

IMPORTANTFURNISH A COPY OF THIS DESIGN TO THE INSTALLATION CONTRACTOR. ITW BCG, INC. SHALL NOT BE RESPONSIBLE FOR ANY DEVIATION FROM THIS DESIGN; ANY FAILURE TO BUILD THE TRUSS IN COMFORMANCE WITH TPI; OR FABRICATING, HANDLING, SHIPPING, INSTALLING & BRACING OF TRUSSES. DESIGN CONFORMS WITH APPLICABLE PROVISIONS OF NDS (NATIONAL DESIGN SPEC, BY AF&PA) AND TPI. ITW BCG CONNECTOR PLATES ARE MADE OF 20/18/16GA (W,H/SS/K) ASTM A653 GRADE 40/60 (W, K/H,SS) GALV. STEEL. APPLY PLATES TO EACH FACE OF TRUSS AND, UNLESS OTHERWISE LOCATED ON THIS DESIGN, POSITION PER DRAWINGS 160A-Z. ANY INSPECTION OF PLATES FOLLOWED BY (I) SHALL BE PER ANNEX A3 OF TPI1-2002 SEC.3. A SEAL ON THIS DRAWING INDICATES ACCEPTANCE OF PROFESSIONAL ENGINEERING RESPONSIBILITY SOLELY FOR THE TRUSS COMPONENT DESIGN SHOWN. THE SUITABILITY AND USE OF THIS COMPONENT FOR ANY BUILDING IS THE RESPONSIBILITY OF THE BUILDING DESIGNER PER ANSI/TPI 1 SEC. 2.

DOUGLAS FLEMING LICENSE No. 66648 STATE OF FLORIDA PROFESSIONAL ENGINEER
Aug 20 '09

TC LL	20.0 PSF	REF	R8228- 19920
TC DL	10.0 PSF	DATE	08/20/09
BC DL	10.0 PSF	DRW	HCUSR8228 09232038
BC LL	0.0 PSF	HC-ENG	DF/DF
TOT.LD.	40.0 PSF	SEQN-	9305
DUR.FAC.	1.25	FROM	AH
SPACING	24.0"	JREF-	1TUD8228Z01

(9-070--Freeman Design Group Hudson -- , ** - M2)

Top chord 2x4 SP #2 Dense
Bot chord 2x6 SP #1 Dense
Webs 2x4 SP #3

Special loads
------(Lumber Dur.Fac.=1.25 / Plate Dur.Fac.=1.25)
TC - From 62 plf at 0.00 to 62 plf at 3.88
BC - From 20 plf at 0.00 to 20 plf at 3.88
BC - 1153 lb Conc. Load at 1.94

110 mph wind, 17.06 ft mean hgt, ASCE 7-05, CLOSED bldg, Located anywhere in roof, CAT II, EXP B, wind TC DL=5.0 psf, wind BC DL=5.0 psf. Iw=1.00 GCpi(+/-)=0.18

Wind reactions based on MWFRS pressures.

End verticals not exposed to wind pressure.

H = recommended connection based on manufacturer tested capacities and calculations. Conditions may exist that require different connections than indicated. Refer to manufacturer publication for additional information.

(A) Continuous lateral bracing equally spaced on member.

Bottom chord checked for 10.00 psf non-concurrent live load.

Deflection meets L/240 live and L/180 total load.

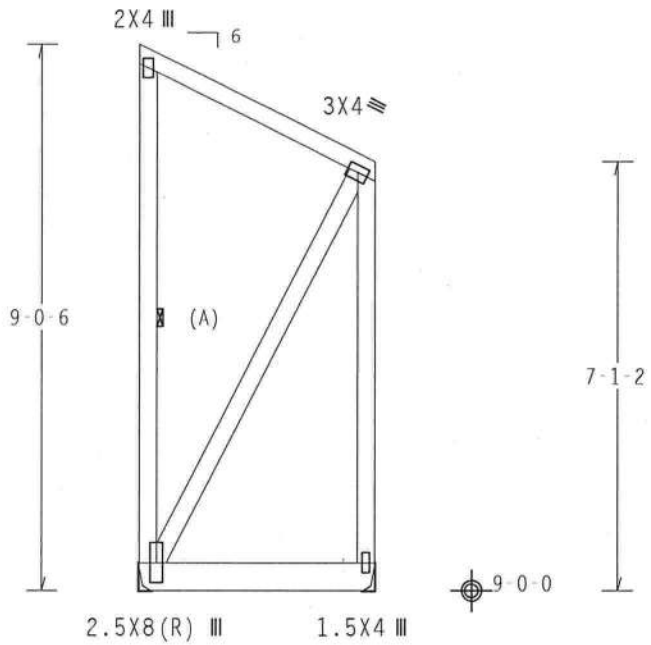

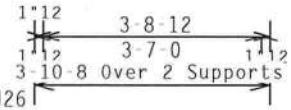

R=736 U=103
RL=-31 H=Simpson LU26
w/ (4) 10d, 0.148"x1.5" nails in Truss
w/ (6) 16d Common, 0.162"x3.5" nails in Girder
Girder is (1)2X0 min. So.Pine

R=736 U=103 H=Simpson LU26
w/ (4) 10d, 0.148"x1.5" nails in Truss
w/ (6) 16d Common, 0.162"x3.5" nails in Girder
Girder is (1)2X0 min. So.Pine

Design Crit: FBC2007Res/TPI-2002(STD)

PLT TYP. Wave FT/RT=10%(0%)/0(0) 9.02.00 QTY:1 FL/-/4/-/-/R/- Scale =.3125"/Ft.

ALPINE
ITW Building Components Group Inc.
Haines City, FL 33844
FL COA #0-978

WARNING TRUSSES REQUIRE EXTREME CARE IN FABRICATION, HANDLING, SHIPPING, INSTALLING AND BRACING. REFER TO BCSI (BUILDING COMPONENT SAFETY INFORMATION), PUBLISHED BY TPI (TRUSS PLATE INSTITUTE, 218 NORTH LEE STREET, SUITE 312, ALEXANDRIA, VA, 22314) AND WTCA (WOOD TRUSS COUNCIL OF AMERICA, 6300 ENTERPRISE LANE, MADISON, WI 53719) FOR SAFETY PRACTICES PRIOR TO PERFORMING THESE FUNCTIONS. UNLESS OTHERWISE INDICATED TOP CHORD SHALL HAVE PROPERLY ATTACHED STRUCTURAL PANELS AND BOTTOM CHORD SHALL HAVE A PROPERLY ATTACHED RIGID CEILING.

IMPORTANT FURNISH A COPY OF THIS DESIGN TO THE INSTALLATION CONTRACTOR. ITW BCG, INC. SHALL NOT BE RESPONSIBLE FOR ANY DEVIATION FROM THIS DESIGN; ANY FAILURE TO BUILD THE TRUSS IN COMFORMANCE WITH TPI; OR FABRICATING, HANDLING, SHIPPING, INSTALLING & BRACING OF TRUSSES. DESIGN CONFORMS WITH APPLICABLE PROVISIONS OF NDS (NATIONAL DESIGN SPEC. BY AF&PA) AND TPI. ITW BCG CONNECTOR PLATES ARE MADE OF 20/18/16GA (W,H/SS/K) ASTM A653 GRADE 40/60 (W, K/H,SS) GALV. STEEL. APPLY PLATES TO EACH FACE OF TRUSS AND, UNLESS OTHERWISE LOCATED ON THIS DESIGN, POSITION PER DRAWINGS 160A-Z. ANY INSPECTION OF PLATES FOLLOWED BY (1) SHALL BE PER ANNEX A3 OF TPI1-2002 SEC.3. A SEAL ON THIS DRAWING INDICATES ACCEPTANCE OF PROFESSIONAL ENGINEERING RESPONSIBILITY SOLELY FOR THE TRUSS COMPONENT DESIGN SHOWN. THE SUITABILITY AND USE OF THIS COMPONENT FOR ANY BUILDING IS THE RESPONSIBILITY OF THE BUILDING DESIGNER PER ANSI/TPI 1 SEC. 2.

DOUGLAS FLEMING LICENSE No. 66648 STATE OF FLORIDA PROFESSIONAL ENGINEER
Aug 20 '09

TC LL	20.0 PSF	REF	R8228- 19921
TC DL	10.0 PSF	DATE	08/20/09
BC DL	10.0 PSF	DRW	HCUSR8228 09232002
BC LL	0.0 PSF	HC-ENG	KD/DF
TOT.LD.	40.0 PSF	SEQN-	66331
DUR.FAC.	1.25	FROM	AH
SPACING	24.0"	JREF-	1TUD8228Z01

(9-070--Freeman Design Group Hudson -- , ** - M1)

Top chord 2x6 SP #2
Bot chord 2x6 SP #2
Webs 2x4 SP #3

Roof overhang supports 2.00 psf soffit load.

Bottom chord checked for 10.00 psf non-concurrent live load.

Deflection meets L/240 live and L/180 total load.

110 mph wind, 15.00 ft mean hgt, ASCE 7-05, CLOSED bldg, not located within 4.50 ft from roof edge, CAT II, EXP B, wind TC DL=5.0 psf, wind BC DL=5.0 psf. Iw=1.00 GCpi(+/-)=0.18

Wind reactions based on MWFRS pressures.

Right end vertical not exposed to wind pressure.

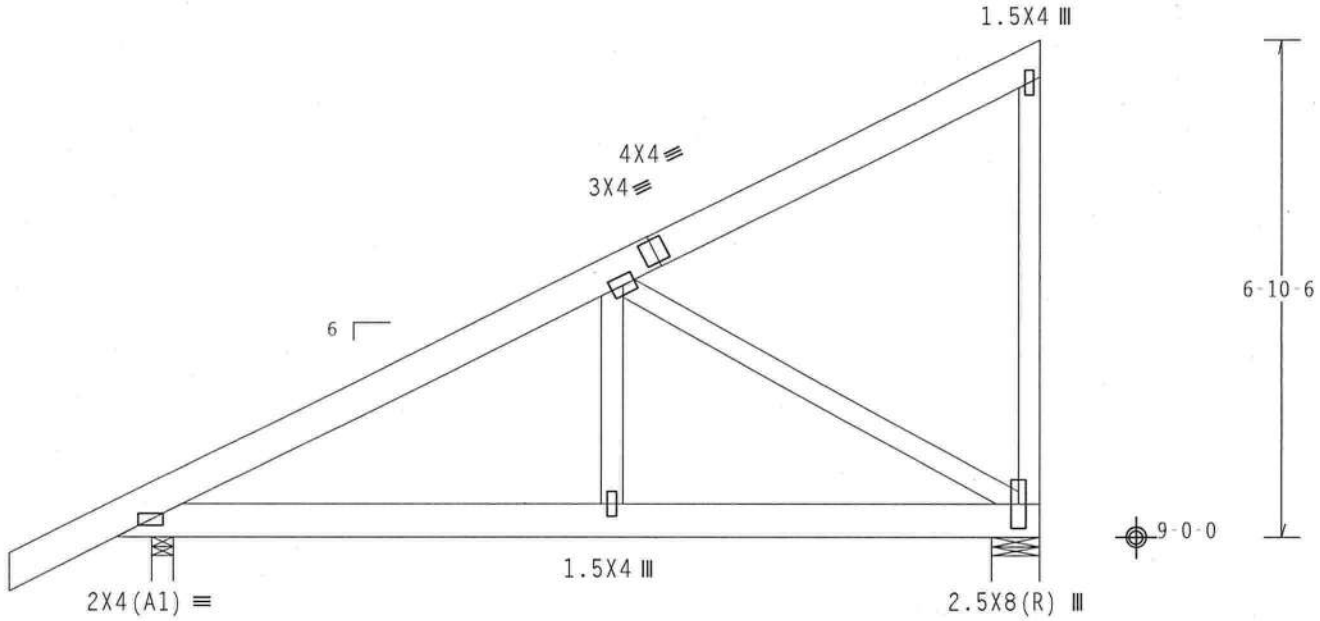

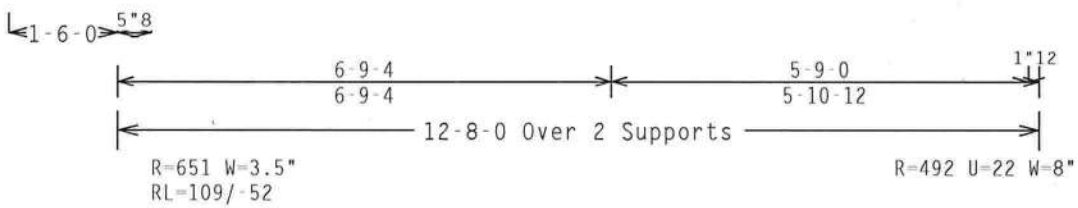

Design Crit: FBC2007Res/TPI-2002(STD)

PLT TYP. Wave FT/RT=10%(0%)/0(0) 9.02.00 QTY:1 FL/-/4/-/-/R/- Scale =.375"/Ft.

ALPINE
ITW Building Components Group Inc.
Haines City, FL 33844
FL C[illegible]078

WARNING TRUSSES REQUIRE EXTREME CARE IN FABRICATION, HANDLING, SHIPPING, INSTALLING AND BRACING. REFER TO BCSI (BUILDING COMPONENT SAFETY INFORMATION), PUBLISHED BY TPI (TRUSS PLATE INSTITUTE, 218 NORTH LEE STREET, SUITE 312, ALEXANDRIA, VA, 22314) AND WTCA (WOOD TRUSS COUNCIL OF AMERICA, 6300 ENTERPRISE LANE, MADISON, WI 53719) FOR SAFETY PRACTICES PRIOR TO PERFORMING THESE FUNCTIONS. UNLESS OTHERWISE INDICATED TOP CHORD SHALL HAVE PROPERLY ATTACHED STRUCTURAL PANELS AND BOTTOM CHORD SHALL HAVE A PROPERLY ATTACHED RIGID CEILING.

IMPORTANTFURNISH A COPY OF THIS DESIGN TO THE INSTALLATION CONTRACTOR. ITW BCG, INC. SHALL NOT BE RESPONSIBLE FOR ANY DEVIATION FROM THIS DESIGN; ANY FAILURE TO BUILD THE TRUSS IN COMFORMANCE WITH TPI; OR FABRICATING, HANDLING, SHIPPING, INSTALLING & BRACING OF TRUSSES. DESIGN CONFORMS WITH APPLICABLE PROVISIONS OF NDS (NATIONAL DESIGN SPEC. BY AF&PA) AND TPI. ITW BCG CONNECTOR PLATES ARE MADE OF 20/18/16GA (W,H/SS/K) ASTM A653 GRADE 40/60 (W, K/H,SS) GALV. STEEL. APPLY PLATES TO EACH FACE OF TRUSS AND. UNLESS OTHERWISE LOCATED ON THIS DESIGN. POSITION PER DRAWINGS 160A-Z. ANY INSPECTION OF PLATES FOLLOWED BY (1) SHALL BE PER ANNEX A3 OF TPI1-2002 SEC.3. A SEAL ON THIS DRAWING INDICATES ACCEPTANCE OF PROFESSIONAL ENGINEERING RESPONSIBILITY SOLELY FOR THE TRUSS COMPONENT DESIGN SHOWN. THE SUITABILITY AND USE OF THIS COMPONENT FOR ANY BUILDING IS THE RESPONSIBILITY OF THE BUILDING DESIGNER PER ANSI/TPI 1 SEC. 2.

DOUGLAS FLEMING LICENSE No. 66648 STATE OF FLORIDA PROFESSIONAL ENGINEER

20 '09

TC LL	20.0 PSF	REF R8228- 19922
TC DL	10.0 PSF	DATE 08/20/09
BC DL	10.0 PSF	DRW HCUSR8228 09232003
BC LL	0.0 PSF	HC-ENG KD/DF
TOT.LD.	40.0 PSF	SEQN- 66323
DUR.FAC.	1.25	FROM AH
SPACING	24.0"	JREF- 1TUD8228Z01

Top chord 2x4 SP #2 Dense
Bot chord 2x4 SP #2 Dense
Webs 2x4 SP #3

(**) 2 plate(s) require special positioning. Refer to scaled plate plot details for special positioning requirements.

110 mph wind, 20.53 ft mean hgt, ASCE 7-05, CLOSED bldg, not located within 4.50 ft from roof edge, CAT II, EXP B, wind TC DL=5.0 psf, wind BC DL=2.0 psf. Iw=1.00 GCpi(+/-)=0.18

Wind reactions based on MWFRS pressures.

Refer to DWG PB1200109 for piggyback details.

SPECIAL LOADS
------(LUMBER DUR.FAC.=1.25 / PLATE DUR.FAC.=1.25)

TC - From	62 PLF	at	0.00	to	62 PLF	at	2.00
TC - From	62 PLF	at	2.00	to	62 PLF	at	8.00
TC - From	62 PLF	at	8.00	to	62 PLF	at	10.00
BC - From	4 PLF	at	0.00	to	4 PLF	at	10.00

In lieu of structural panels use purlins to brace all flat TC @ 24" OC.

Deflection meets L/240 live and L/180 total load.

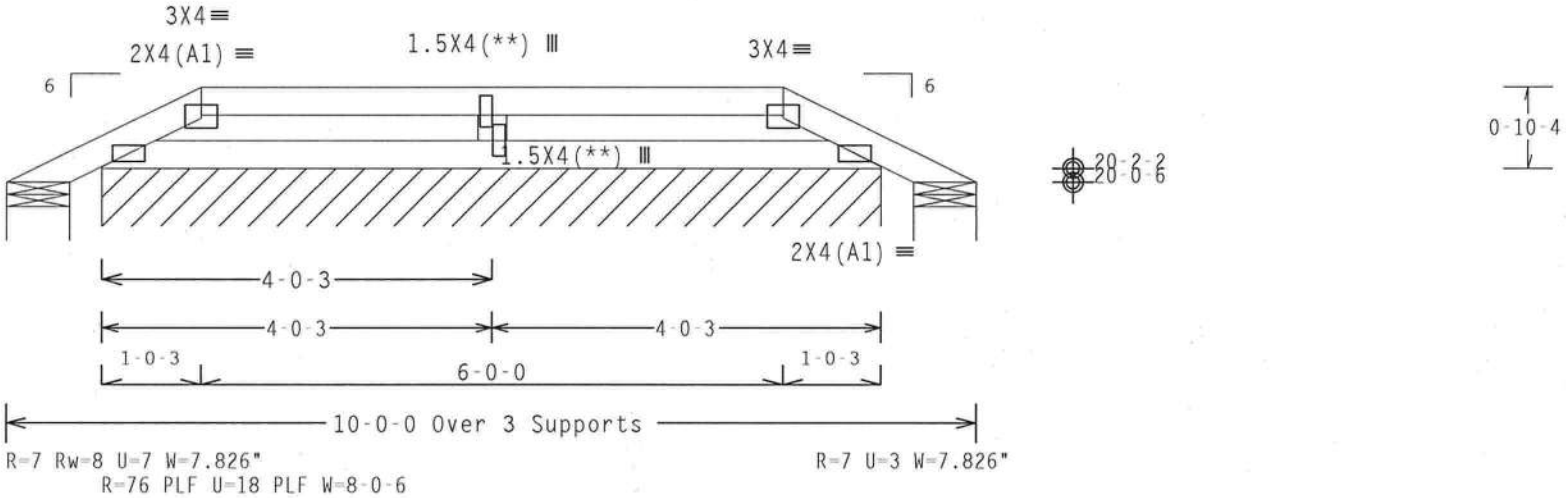

Design Crit: FBC2007Res/TPI-2002(STD)

PLT TYP. Wave FT/RT=10%(0%)/0(0) 8.07.00 [illegible] QTY:2 FL/-/4/-/-/R/- Scale =.5"/Ft.

ALPINE
ITW Building Components Group Inc.
Haines City, FL 33844
FL C[illegible]278

WARNING TRUSSES REQUIRE EXTREME CARE IN FABRICATION, HANDLING, SHIPPING, INSTALLING AND BRACING. REFER TO BCSI (BUILDING COMPONENT SAFETY INFORMATION), PUBLISHED BY TPI (TRUSS PLATE INSTITUTE, 218 NORTH LEE STREET, SUITE 312, ALEXANDRIA, VA, 22314) AND WTCA (WOOD TRUSS COUNCIL OF AMERICA, 6300 ENTERPRISE LANE, MADISON, WI 53719) FOR SAFETY PRACTICES PRIOR TO PERFORMING THESE FUNCTIONS. UNLESS OTHERWISE INDICATED TOP CHORD SHALL HAVE PROPERLY ATTACHED STRUCTURAL PANELS AND BOTTOM CHORD SHALL HAVE A PROPERLY ATTACHED RIGID CEILING.

IMPORTANTFURNISH A COPY OF THIS DESIGN TO THE INSTALLATION CONTRACTOR. ITW BCG, INC. SHALL NOT BE RESPONSIBLE FOR ANY DEVIATION FROM THIS DESIGN; ANY FAILURE TO BUILD THE TRUSS IN CONFORMANCE WITH TPI; OR FABRICATING, HANDLING, SHIPPING, INSTALLING & BRACING OF TRUSSES. DESIGN CONFORMS WITH APPLICABLE PROVISIONS OF NDS (NATIONAL DESIGN SPEC. BY AF&PA) AND TPI. ITW BCG CONNECTOR PLATES ARE MADE OF 20/18/16GA (W,H/SS/K) ASTM A653 GRADE 40/60 (W, K/H,SS) GALV. STEEL. APPLY PLATES TO EACH FACE OF TRUSS AND, UNLESS OTHERWISE LOCATED ON THIS DESIGN, POSITION PER DRAWINGS 160A-Z. ANY INSPECTION OF PLATES FOLLOWED BY (1) SHALL BE PER ANNEX A3 OF TPI1-2002 SEC.3. A SEAL ON THIS DRAWING INDICATES ACCEPTANCE OF PROFESSIONAL ENGINEERING RESPONSIBILITY SOLELY FOR THE TRUSS COMPONENT DESIGN SHOWN. THE SUITABILITY AND USE OF THIS COMPONENT FOR ANY BUILDING IS THE RESPONSIBILITY OF THE BUILDING DESIGNER PER ANSI/TPI 1 SEC. 2.

DOUGLAS FLEMING LICENSE No. 66648 STATE OF FLORIDA PROFESSIONAL ENGINEER
[illegible] 20 '09

TC LL	20.0 PSF	REF	R8228- 19923
TC DL	10.0 PSF	DATE	08/20/09
BC DL	10.0 PSF	DRW	HCUSR8228 09232048
BC LL	0.0 PSF	HC-ENG	DF/DF
TOT.LD.	40.0 PSF	SEQN-	9545
DUR.FAC.	1.25	FROM	AH
SPACING	24.0"	JREF-	1TUD8228Z01

Top chord 2x4 SP #2 Dense
Bot chord 2x4 SP #2 Dense
Webs 2x4 SP #3

110 mph wind, 21.03 ft mean hgt, ASCE 7-05, CLOSED bldg, not located within 4.50 ft from roof edge, CAT II, EXP B, wind TC DL=5.0 psf, wind BC DL=2.0 psf. Iw=1.00 GCpi(+/-)=0.18

Wind reactions based on MWFRS pressures.

Deflection meets L/240 live and L/180 total load.

Refer to DWG PB1200109 for piggyback details.

SPECIAL LOADS
------(LUMBER DUR.FAC.=1.25 / PLATE DUR.FAC.=1.25)

TC - From	62 PLF	at	0.00	to	62 PLF	at	4.00
TC - From	62 PLF	at	4.00	to	62 PLF	at	6.00
TC - From	62 PLF	at	6.00	to	62 PLF	at	10.00
BC - From	4 PLF	at	0.00	to	4 PLF	at	10.00

In lieu of structural panels or rigid ceiling use purlins to brace all flat TC @ 24" OC, all BC @ 24" OC.

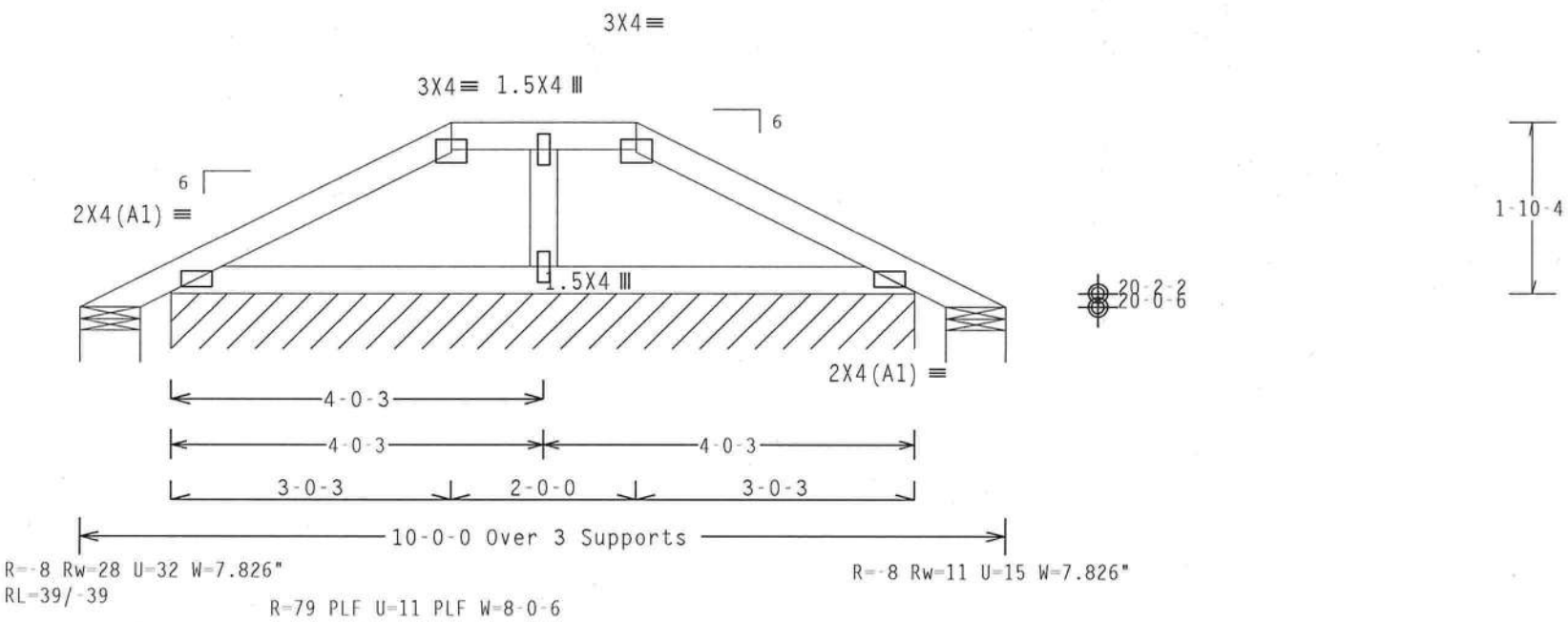

Design Crit: FBC2007Res/TPI-2002(STD)
FT/RT=10%(0%)/0(0)

PLT TYP. Wave | 8.07.00 | QTY:2 | FL/-/4/-/-/R/- | Scale =.5"/Ft.

ALPINE
ITW Building Components Group Inc.
Haines City, FL 33844
FL C[illegible]278

WARNING TRUSSES REQUIRE EXTREME CARE IN FABRICATION, HANDLING, SHIPPING, INSTALLING AND BRACING. REFER TO BCSI (BUILDING COMPONENT SAFETY INFORMATION), PUBLISHED BY TPI (TRUSS PLATE INSTITUTE, 218 NORTH LEE STREET, SUITE 312, ALEXANDRIA, VA. 22314) AND WTCA (WOOD TRUSS COUNCIL OF AMERICA, 6300 ENTERPRISE LANE, MADISON, WI 53719) FOR SAFETY PRACTICES PRIOR TO PERFORMING THESE FUNCTIONS. UNLESS OTHERWISE INDICATED TOP CHORD SHALL HAVE PROPERLY ATTACHED STRUCTURAL PANELS AND BOTTOM CHORD SHALL HAVE A PROPERLY ATTACHED RIGID CEILING.

IMPORTANTFURNISH A COPY OF THIS DESIGN TO THE INSTALLATION CONTRACTOR. ITW BCG, INC. SHALL NOT BE RESPONSIBLE FOR ANY DEVIATION FROM THIS DESIGN; ANY FAILURE TO BUILD THE TRUSS IN CONFORMANCE WITH TPI; OR FABRICATING, HANDLING, SHIPPING, INSTALLING & BRACING OF TRUSSES.
DESIGN CONFORMS WITH APPLICABLE PROVISIONS OF NDS (NATIONAL DESIGN SPEC, BY AF&PA) AND TPI. ITW BCG CONNECTOR PLATES ARE MADE OF 20/18/16GA (W,H/SS/K) ASTM A653 GRADE 40/60 (W, K/H,SS) GALV. STEEL. APPLY PLATES TO EACH FACE OF TRUSS AND, UNLESS OTHERWISE LOCATED ON THIS DESIGN, POSITION PER DRAWINGS 160A-Z. ANY INSPECTION OF PLATES FOLLOWED BY (1) SHALL BE PER ANNEX A3 OF TPI1-2002 SEC.3. A SEAL ON THIS DRAWING INDICATES ACCEPTANCE OF PROFESSIONAL ENGINEERING RESPONSIBILITY SOLELY FOR THE TRUSS COMPONENT DESIGN SHOWN. THE SUITABILITY AND USE OF THIS COMPONENT FOR ANY BUILDING IS THE RESPONSIBILITY OF THE BUILDING DESIGNER PER ANSI/TPI 1 SEC. 2.

DOUGLAS FLEMING LICENSE No. 66648 STATE OF FLORIDA PROFESSIONAL ENGINEER
[illegible] 20 '09

TC LL	20.0 PSF	REF R8228- 19924
TC DL	10.0 PSF	DATE 08/20/09
BC DL	10.0 PSF	DRW HCUSR8228 09232016
BC LL	0.0 PSF	HC-ENG DF/DF
TOT.LD.	40.0 PSF	SEQN- 9547
DUR.FAC.	1.25	FROM AH
SPACING	24.0"	JREF- 1TUD8228Z01

(9-070--Freeman Design Group Hudson -- , ** - PB3)

Top chord 2x4 SP #2 Dense
Bot chord 2x4 SP #2 Dense
Webs 2x4 SP #3

110 mph wind, 21.28 ft mean hgt, ASCE 7-05, CLOSED bldg, not located within 4.50 ft from roof edge, CAT II, EXP B, wind TC DL=5.0 psf, wind BC DL=2.0 psf. Iw=1.00 GCpi(+/-)=0.18

Wind reactions based on MWFRS pressures.

Refer to DWG PB1200109 for piggyback details.

SPECIAL LOADS
------(LUMBER DUR.FAC.=1.25 / PLATE DUR.FAC.=1.25)

TC - From	62 PLF	at	0.00	to	62 PLF	at	5.00
TC - From	62 PLF	at	5.00	to	62 PLF	at	10.00
BC - From	4 PLF	at	0.00	to	4 PLF	at	10.00

In lieu of rigid ceiling use purlins to brace BC @ 24" OC.

Deflection meets L/240 live and L/180 total load.

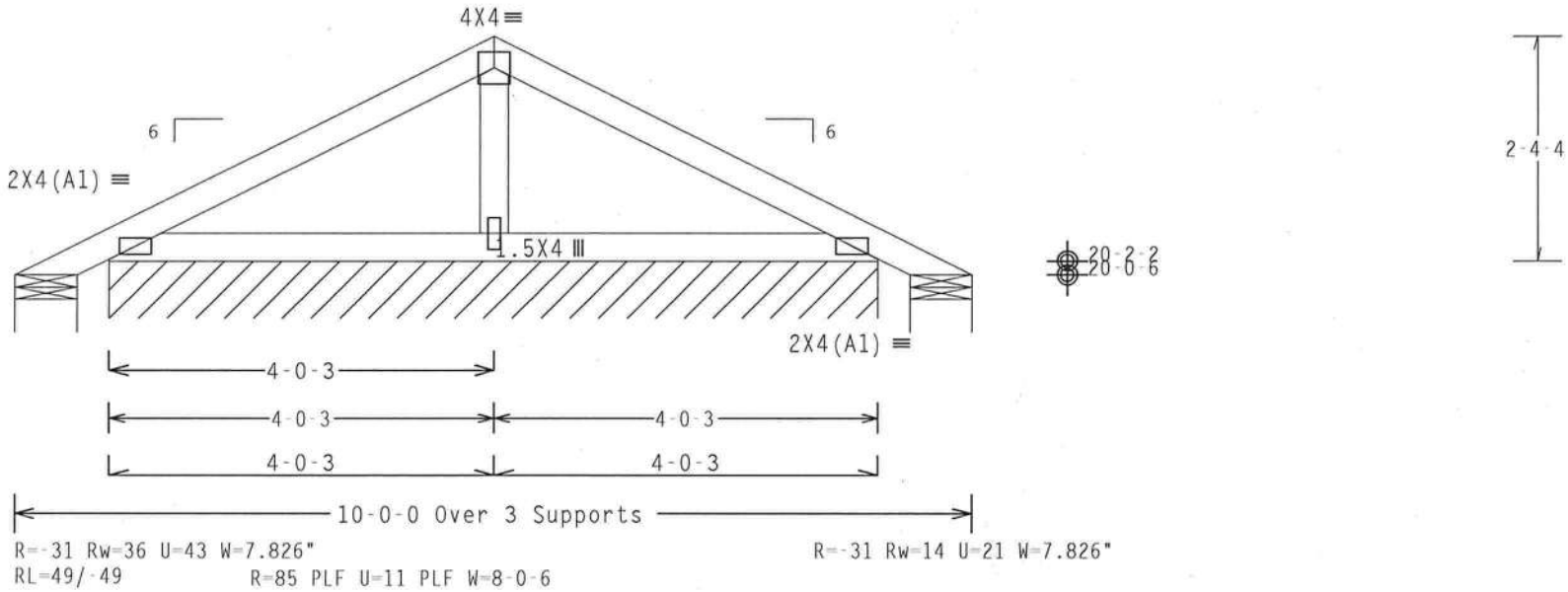

Design Crit: FBC2007Res/TPI-2002(STD)

PLT TYP. Wave FT/RT=10%(0%)/0(0) 8.07.00 QTY:6 FL/-/4/-/-/R/- Scale =.5"/Ft.

ALPINE
ITW Building Components Group Inc.
Haines City, FL 33844
FL C[illegible]78

WARNING TRUSSES REQUIRE EXTREME CARE IN FABRICATION, HANDLING, SHIPPING, INSTALLING AND BRACING. REFER TO BCSI (BUILDING COMPONENT SAFETY INFORMATION), PUBLISHED BY TPI (TRUSS PLATE INSTITUTE, 218 NORTH LEE STREET, SUITE 312, ALEXANDRIA, VA. 22314) AND WTCA (WOOD TRUSS COUNCIL OF AMERICA, 6300 ENTERPRISE LANE, MADISON, WI 53719) FOR SAFETY PRACTICES PRIOR TO PERFORMING THESE FUNCTIONS. UNLESS OTHERWISE INDICATED TOP CHORD SHALL HAVE PROPERLY ATTACHED STRUCTURAL PANELS AND BOTTOM CHORD SHALL HAVE A PROPERLY ATTACHED RIGID CEILING.

IMPORTANTFURNISH A COPY OF THIS DESIGN TO THE INSTALLATION CONTRACTOR. ITW BCG, INC. SHALL NOT BE RESPONSIBLE FOR ANY DEVIATION FROM THIS DESIGN; ANY FAILURE TO BUILD THE TRUSS IN COMFORMANCE WITH TPI; OR FABRICATING, HANDLING, SHIPPING, INSTALLING & BRACING OF TRUSSES.
DESIGN CONFORMS WITH APPLICABLE PROVISIONS OF NDS (NATIONAL DESIGN SPEC. BY AF&PA) AND TPI. ITW BCG CONNECTOR PLATES ARE MADE OF 20/18/16GA (W,H/SS/K) ASTM A653 GRADE 40/60 (W, K/H,SS) GALV. STEEL. APPLY PLATES TO EACH FACE OF TRUSS AND, UNLESS OTHERWISE LOCATED ON THIS DESIGN, POSITION PER DRAWINGS 160A-Z. ANY INSPECTION OF PLATES FOLLOWED BY (1) SHALL BE PER ANNEX A3 OF TPI1-2002 SEC.3. A SEAL ON THIS DRAWING INDICATES ACCEPTANCE OF PROFESSIONAL ENGINEERING RESPONSIBILITY SOLELY FOR THE TRUSS COMPONENT DESIGN SHOWN. THE SUITABILITY AND USE OF THIS COMPONENT FOR ANY BUILDING IS THE RESPONSIBILITY OF THE BUILDING DESIGNER PER ANSI/TPI 1 SEC. 2.

DOUGLAS FLEMING LICENSE No. 66648 STATE OF FLORIDA PROFESSIONAL ENGINEER
[illegible] 20 '09

TC LL	20.0 PSF	REF R8228- 19925
TC DL	10.0 PSF	DATE 08/20/09
BC DL	10.0 PSF	DRW HCUSR8228 09232049
BC LL	0.0 PSF	HC-ENG DF/DF
TOT.LD.	40.0 PSF	SEQN- 9549
DUR.FAC.	1.25	FROM AH
SPACING	24.0"	JREF- 1TUD8228Z01

CLB WEB BRACE SUBSTITUTION

THIS DETAIL IS TO BE USED WHEN CONTINUOUS LATERAL BRACING (CLB) IS SPECIFIED ON A TRUSS DESIGN BUT AN ALTERNATIVE WEB BRACING METHOD IS DESIRED.

NOTES:

THIS DETAIL IS ONLY APPLICABLE FOR CHANGING THE SPECIFIED CLB SHOWN ON SINGLE PLY SEALED DESIGNS TO T-BRACING OR SCAB BRACING.

ALTERNATIVE BRACING SPECIFIED IN CHART BELOW MAY BE CONSERVATIVE. FOR MINIMUM ALTERNATIVE BRACING, RE-RUN DESIGN WITH APPROPRIATE BRACING.

WEB MEMBER SIZE	SPECIFIED CLB BRACING	ALTERNATIVE BRACING T OR L-BRACE	ALTERNATIVE BRACING SCAB BRACE
2X3 OR 2X4	1 ROW	2X4	1-2X4
2X3 OR 2X4	2 ROWS	2X6	2-2X4
2X6	1 ROW	2X4	1-2X6
2X6	2 ROWS	2X6	2-2X4(*)
2X8	1 ROW	2X6	1-2X8
2X8	2 ROWS	2X6	2-2X6(*)

T-BRACE, L-BRACE AND SCAB BRACE TO BE SAME SPECIES AND GRADE OR BETTER THAN WEB MEMBER UNLESS SPECIFIED OTHERWISE ON ENGINEER'S SEALED DESIGN.

(*) CENTER SCAB ON WIDE FACE OF WEB. APPLY (1) SCAB TO EACH FACE OF WEB.

T-BRACING OR L-BRACING:

APPLY TO EITHER SIDE OF WEB NARROW FACE.
ATTACH WITH 10d BOX OR GUN (0.128"x 3.",MIN) NAILS.
AT 6" O.C.
BRACE IS A MINIMUM 80% OF WEB MEMBER LENGTH

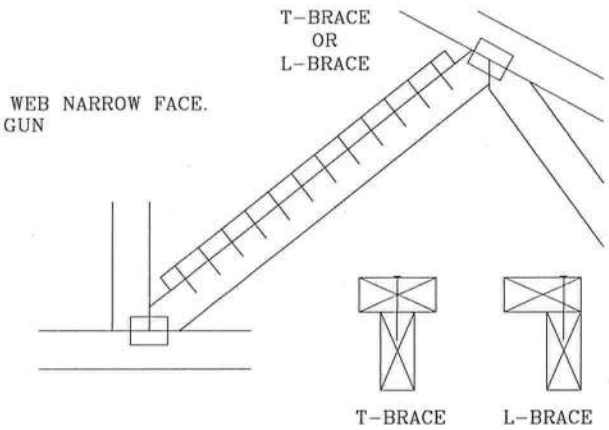

SCAB BRACING:

APPLY SCAB(S) TO WIDE FACE OF WEB.
NO MORE THAN (1) SCAB PER FACE.
ATTACH WITH 10d BOX OR GUN (0.128"x 3.",MIN) NAILS.
AT 6" O.C.
BRACE IS A MINIMUM 80% OF WEB MEMBER LENGTH

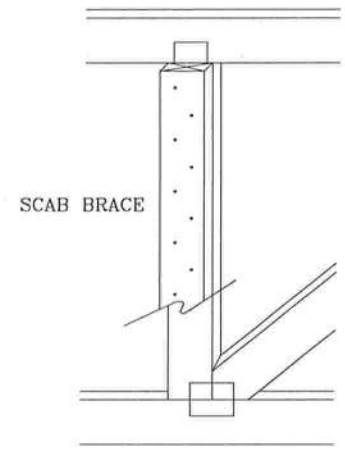

ITW Building Components Group Inc.

Earth City, MO 63045

WARNING READ AND FOLLOW ALL NOTES ON THIS SHEET!
Trusses require extreme care in fabricating, handling, shipping, installing and bracing. Refer to and follow BCSI (Building Component Safety Information, by TPI and WTCA) for safety practices prior to performing these functions. Installers shall provide temporary bracing per BCSI. Unless noted otherwise, top chord shall have properly attached structural panels and bottom chord shall have a properly attached rigid ceiling. Locations shown for permanent lateral restraint of webs shall have bracing installed per BCSI sections B3 & B7. See this job's general notes page for more information.

IMPORTANT FURNISH COPY OF THIS DESIGN TO INSTALLATION CONTRACTOR.
ITW Building Components Group Inc. (ITWBCG) shall not be responsible for any deviation from this design, any failure to build the truss in conformance with TPI, or fabricating, handling, shipping, installing & bracing of trusses. ITWBCG connector plates are made of 20/18/16GA (W,H/S/K) ASTM A653 grade 37/40 (K/W/H,S) galv. steel. Apply plates to each face of truss, positioned as shown above and on Joint Details. A seal on this drawing or cover page indicates acceptance and professional engineering responsibility solely for the truss component design shown. The suitability and use of this component for any building is the responsibility of the Building Designer per ANST/TPI 1 Sec. 2.
ITW-BCG: www.itwbcg.com; TPI: www.tpinst.com; WTCA: www.sbcindustry.com; ICC: www.iccsafe.org

DOUGLAS FLEMING LICENSE No. 66648 Aug 20 '09 STATE OF FLORIDA PROFESSIONAL ENGINEER

TC LL	PSF	
TC DL	PSF	
BC DL	PSF	
BC LL	PSF	
TOT. LD.	PSF	
DUR. FAC.		
SPACING		

REF	CLB SUBST.
DATE	1/1/09
DRWG	BRCLBSUB0109

120 PIGGYBACK DETAIL

UP TO 120 MPH WIND, 30.00 FT MEAN HGT, ASCE 7-02 OR ASCE 7-05, ENCLOSED BLDG. LOCATED ANYWHERE IN ROOF, CAT II, EXP C, WIND DL= 5.0 PSF KZT=1.0.

MAXIMUM TRUSS SPACING IS 24" O.C.
DETAIL IS NOT APPLICABLE IF CAP SUPPORTS ADDITIONAL LOADS SUCH AS CUPOLA, STEEPLE, CHIMNEY OR DRAG STRUT LOADS.

NOTE: TOP CHORDS OF TRUSSES SUPPORTING PIGGYBACK CAP TRUSSES MUST BE ADEQUATELY BRACED BY SHEATHING OR PURLINS. THE BUILDING ENGINEER OF RECORD SHALL PROVIDE DIAGONAL BRACING OR OTHER SUITABLE ANCHORAGE TO PERMANENTLY RESTRAIN PURLINS.

** REFER TO ENGINEER'S SEALED TRUSS DESIGN DRAWING FOR PIGGYBACK AND BASE TRUSS SPECIFICATIONS.

DETAIL A

PIGGYBACK CAP TRUSS SLANT NAILED TO ALL TOP CHORD PURLIN BRACING WITH (2) 16d BOX NAILS (0.135"x3.5") AND SECURE TOP CHORD WITH 2X4 #3 GRADE SCAB (1 SIDE ONLY AT EACH END) ATTACHED WITH 2 ROWS OF 10d BOX NAILS (0.128"x3.0") AT 4" O.C.

ATTACH PURLIN BRACING TO THE FLAT TOP CHORD USING (2) 16d BOX NAILS (0.135"x3.5")

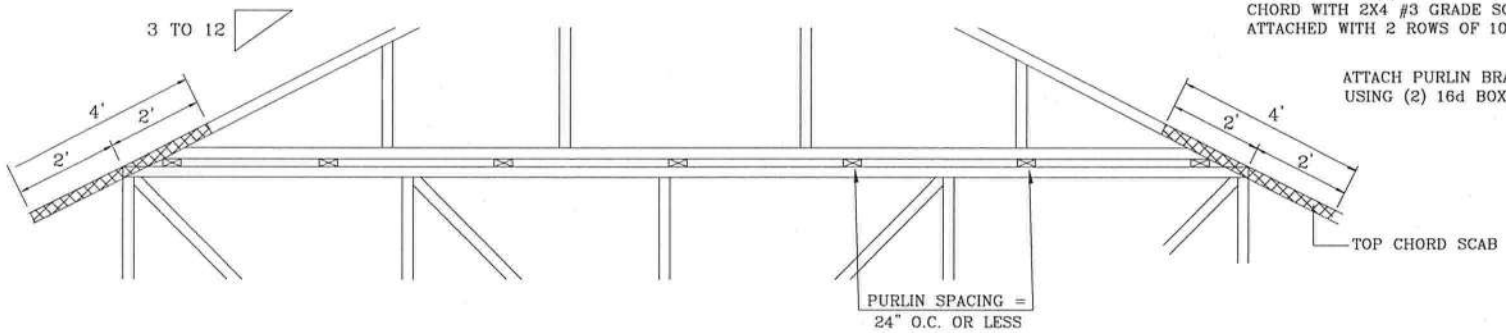

DETAIL B

PIGGYBACK CAP TRUSS SLANT NAILED TO ALL TOP CHORD PURLIN BRACING WITH (2) 16d BOX NAILS (0.135"x3.5") AND SECURE TOP CHORD WITH 2X4 #3 GRADE SCAB (1 SIDE ONLY AT EACH END) ATTACHED WITH 2 ROWS OF 10d BOX NAILS (0.128"x3.0") AT 4" O.C.

ATTACH PURLIN BRACING TO THE FLAT TOP CHORD USING (2) 16d BOX NAILS (0.135"x3.5")

PIGGYBACK CAP TRUSS NAILED TO TOP CHORD OF BASE TRUSS AND SECURED WITH 2x4 SPF#2, FULL CHORD DEPTH SCABS @ 8' O.C. EACH FACE, STAGGERED 4' O.C. ATTACH WITH 3 10d BOX NAILS (0.128"x3") INTO BOTH CHORDS (TOTAL OF 6 NAILS PER SCAB) AS SHOWN BY CIRCLED NUMBER.

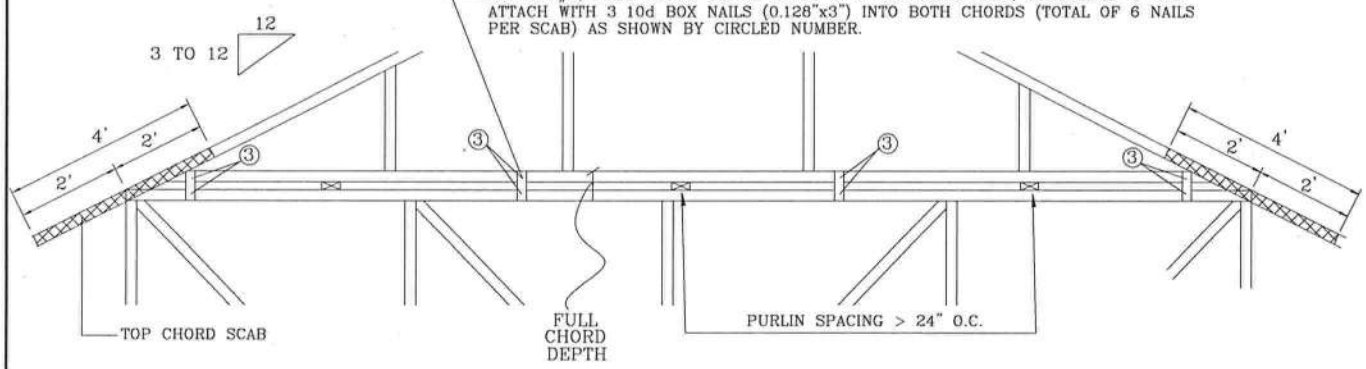

ALTERNATE ATTACHMENTS
TRULOX USE 3x8 TRULOX PLATES FOR 2x4 CHORD MEMBER, AND 3x10 TRULOX PLATES FOR 2x6 AND LARGER CHORD MEMBERS. ATTACH TO EACH FACE @ 8' O.C. WITH (4) 0.120"x1.375" NAILS INTO CAP BOTTOM CHORD AND (4) IN BASE TRUSS TOP CHORD. TRULOX PLATES MAY BE STAGGERED 4' O.C. FRONT TO BACK FACES.
PLYWOOD GUSSET 8"x8"x1/2" RATED SHEATHING GUSSETS (EACH FACE). ATTACH @ 8' O.C. WITH (8) 6d COMMON (0.113"x2") NAILS PER GUSSET, (4) IN CAP BOTTOM CHORD AND (4) IN BASE TRUSS TOP CHORD. GUSSETS MAY BE STAGGERED 4' O.C. FRONT TO BACK FACES.

ITW Building Components Group Inc.

Earth City, MO 63045

WARNING READ AND FOLLOW ALL NOTES ON THIS SHEET!
Trusses require extreme care in fabricating, handling, shipping, installing and bracing. Refer to and follow BCSI (Building Component Safety Information, by TPI and WTCA) for safety practices prior to performing these functions. Installers shall provide temporary bracing per BCSI. Unless noted otherwise, top chord shall have properly attached structural panels and bottom chord shall have a properly attached rigid ceiling. Locations shown for permanent lateral restraint of webs shall have bracing installed per BCSI sections B3 & B7. See this job's general notes page for more information.

IMPORTANT FURNISH COPY OF THIS DESIGN TO INSTALLATION CONTRACTOR.
ITW Building Components Group Inc. (ITWBCG) shall not be responsible for any deviation from this design, any failure to build the truss in conformance with TPI, or fabricating, handling, shipping, installing & bracing of trusses. ITWBCG connector plates are made of 20/18/16GA (W,H/S/K) ASTM A653 grade 37/40/60 (K/W/H,S) galv. steel. Apply plates to each face of truss, positioned as shown above and on Joint Details. A seal on this drawing or cover page indicates acceptance and professional engineering responsibility solely for the truss component design shown. The suitability and use of this component for any building is the responsibility of the Building Designer per ANST/TPI 1 Sec. 2.
ITW-BCG: www.itwbcg.com; TPI: www.tpinst.com; WTCA: www.sbcindustry.com; ICC: www.iccsafe.org

DOUGLAS FLEMING
LICENSE
No. 66648
STATE OF
FLORIDA
PROFESSIONAL ENGINEER
Aug 20

SPACING 24.0"

REF	PIGGYBACK
DATE	1/1/09
DRWG	PB1200109

CERTIFICATE OF

OCCUPANCY

COLUMBIA COUNTY, FLORIDA

Department of Building and Zoning Inspection

This Certificate of Occupancy is issued to the below named permit holder for the building and premises at the below named location, and certifies that the work has been completed in accordance with the Columbia County Building Code.

Parcel Number 16-5S-17-09270-000 **Building permit No.** 000027985

Use Classification SFD/UTILITY **Fire:** 61.10

Permit Holder JERRY & DEBORAH HUDSON **Waste:** 83.75

Owner of Building JERRY & DEBORAH HUDSON **Total:** 144.85

Location: 1178 SW ENGLISH ST., LAKE CITY, FL

Date: 05/21/2010

Harry Dicks

Building Inspector

POST IN A CONSPICUOUS PLACE
(Business Places Only)

27985

Service Slip / Invoice

ORDER: 628045
WORK DATE: 05/26/10 Wednesday

Pestmaster Services of Lake City
187 Southeast Country Club Rd
Suite 101
Lake City, FL 32025
386-752-7779

Bill-To: [118762]
JERRY HUDSON
1178 SW ENGLISH ST
LAKE CITY, FL 32025

Work Location: [118762] 386-365-7987
JERRY HUDSON
1178 SW ENGLISH ST
LAKE CITY, FL 32025

Work Date	Time	Target Pest	Technician		Time In
05/26/10			LC02	Tommy Houk	09:00

Purchase Order	Terms	Last Service	Map Code	Time Out
	COD	08/17/09		10:30

441 S 1 MILE PAST 240 (NETTLES SAUSAGE) TO ENGLISH ST T/R 1 MILE ON LEFT #S ON MAIL BOX

Gate code 5151 Final Treatment

Service	Description	Amount
LC TERMITE 21	PRETREAT	$75.00

SUBTOTAL	$75.00
TAX	$0.00
TOTAL	$75.00

chg

	Pesticide / Product	%	UOM	Amount		Pesticide / Product	%	UOM	Amount
1	Premise Pro	.05		75 Gallons					
2					6				
3					7				
4					8				

Location of Treatment: Numbers correspond to line numbers above

____ Kitchen	____ Living Room	____ Dining Room(s)	____ Bed Room(s)
____ Attic	____ Shed(s)	____ Garage(s)	____ Crawlspace(s)
____ Office(s)	____ Lawn Area	____ Dumpster Area	____ Basement(s)
____ Bar(s)	____ Store Room	____ Rodent Burrow	____ Rodent Pathway
____ Bathroom(s)	____ Other	____ Family Room / Den	____ Laundry / Utility

Site of Treatment: Numbers correspond to line numbers above

____ Baseboards	____ Cabinets	____ Carpeting	____ Under and Behind Kitchen Equipment
____ Sill Area	____ Eaves	____ Wall Voids	
✓ Outside Perimeter	____ Outside Beddings	____ Furniture	
____ Other ____		____ Other ____	

Method of Treatment: Numbers correspond to line numbers above

____ Spot Treatment	____ ULV Machine	____ Broadcast	____ Fan Spray
____ Space Spray	____ C & C Aerosol	____ Duster	____ Air Sprayer
____ Fumigation	____ Granulate	____ Rat Station	____ Mouse Station
____ Actisol Machine	____ Drill & Treat Voids	✓ Slab Injector	____ Total Release Aerosol
____ Other		____ Other ____	

* Charges outstanding over 30 days from the date of service are subject to a 1½% FINANCE CHARGE PER MONTH or annual percentage rate of 18%. Customer agrees to pay accrued expenses in the event of collection.

I hereby acknowledge the satisfactory completion of all services rendered, and agree to pay the cost of services as specified above.

PLEASE PAY FROM THIS INVOICE

X ____
CUSTOMER SIGNATURE

THIS INSTRUMENT WAS PREPARED BY:

TERRY McDAVID
POST OFFICE BOX 1328
LAKE CITY, FL 32056-1328

RETURN TO:

TERRY McDAVID
POST OFFICE BOX 1328
LAKE CITY, FL 32056-1328

File No. 09-09

Property Appraiser's
Parcel Identification No.
16-5S-17-09270-000 (Parent Parcel)

Recording Fee $35.50
Documentary Stamps $665.00
Consideration $95,000.00

Inst:200912000890 Date:1/21/2009 Time:8:56 AM
Doc Stamp-Deed:665.00
DC,P.DeWitt Cason,Columbia County Page 1 of 4 B:1165 P:1961

WARRANTY DEED

THIS INDENTURE, made this 16th day of January 2009, BETWEEN BRIAN F. CREWS and his wife, KARENA J. CREWS, whose post office address is 1353 SE Loquat Way, Lake City, Florida 32025, of the County of Columbia, State of Florida, grantor*, and JERRY M. and his wife, DEBORAH A. HUDSON, whose post office address is 2420 Delys Street, Cocoa, FL 32926, grantee*.

WITNESSETH: that said grantor, for and in consideration of the sum of Ten Dollars ($10.00), and other good and valuable considerations to said grantor in hand paid by said grantee, the receipt whereof is hereby acknowledged, has granted, bargained and sold to the said grantee, and grantee's heirs and assigns forever, the following described land, situate, lying and being in Columbia County, Florida, to-wit:

TOWNSHIP 5 SOUTH - RANGE 17 EAST

SECTION 16: A parcel of land in Section 16, Township 5 South, Range 17 East, Columbia County, Florida, being more particularly described as follows:

COMMENCE at the Southwest corner of the Southeast ¼ of Section 16, Township 5 South, Range 17 East, Columbia County, Florida and run North 89°50'26" East along the South line of the Southwest ¼ of the Southeast ¼ of Section 16 a distance of 8.88 feet to a point on the Easterly Maintained Right-of-Way line of English Road (a County Maintained road) and the POINT OF BEGINNING; thence North 00°15'33" West along said Easterly Maintained Right-of-Way line of English Road (a County Maintained road) a distance of 309.12 feet; thence North 01°09'49" East still along the Easterly Maintained Right-of-Way line of English Road (a County Maintained road) a distance of 255.87 feet; thence North 02°54'43" East still along the Easterly Maintained Right-of-Way line of English Road (a County Maintained road) a distance of 285.82 feet; thence North 38°36'23" East still along said Easterly Maintained Right-of-Way line of English Road (a County Maintained road) a distance of 25.12 feet; thence Easterly and Northeasterly along the Southerly Maintained Right-of-Way line of English Road (a County Maintained road) a distance of 650.5 feet, more or less; thence South

00°42'14" West a distance of 921.41 feet to a point on the South line of the Southwest ¼ of the Southeast ¼; thence South 89°50'26" West along said South line of the Southwest ¼ of the Southeast ¼ a distance of 715.59 feet to the POINT OF BEGINNING.

N.B.: For a period of time ending twenty (20) years from this date, the property shall be subject to the following restrictions:

1. This property shall be used for residential purposes only, and no business or commercial building may be erected on any property and no business may be conducted thereon. No billboards or advertising signs shall be erected on any property, except such signs as may be reasonably required for sale purposes.

2. No permanent dwelling shall be permitted on any lot which has less than twelve hundred (1200) square feet of living space exclusive of open porches, garages or carports. Manufactured homes shall be allowed provided they are not more than three (3) years old when placed on this property, and provided each manufactured home shall contain not less than twelve hundred (1200) square feet of livable area. All manufactured homes must be underskirted and underpinned within ninety (90) days of set up on the property and maintained in a neat and orderly fashion.

3. No more than one (1) residential dwelling (including manufactured homes) shall be allowed per three (3) acres if allowed by County Land Use Regulations. Detached utility buildings, garages, pump houses or storage buildings located on this property shall be constructed with new materials.

4. This property shall not be used for commercial livestock breeding or raising. Household pets are permitted, provided they are not used for commercial breeding purposes and are kept under the control of the occupant at all times. Dogs may not exceed four (4) in number. Horses and cattle may occupy a lot for the personal use and enjoyment of the occupant, not to exceed a total of one (1) per three (3) acres. No swine shall be permitted to occupy any portion of this property. Permitted livestock shall not be obnoxious or four, offensive or cause odors which shall constitute a nuisance.

5. No property shall be maintained, nor shall any activity be carried on upon any property which is an annoyance or nuisance. No immoral, improper or unlawful use shall be made of the property and each owner shall comply with all valid laws, zoning ordinances and regulations of all governmental agencies having jurisdiction thereof.

6. All property and improvements thereon shall, at all times, be maintained in a clean and neat condition. No property shall be used for a junk yard, dumping ground, or for the accumulation of garbage or other refuse, foul smelling matter or other uses which would be detrimental to the comfort, health and safety of the inhabitants of the surrounding area. All vacant property shall be kept free of any accumulation of trash and other material which would constitute a fire hazard or render the property unsightly. If the owner fails to remove any trash, junk or otherwise maintain his property after thirty (30) days' written notice from the Grantor, Grantor shall have the right to

remove any such trash or clean up the property at the expense of the owner.

7. The violation of these Protective Covenants shall grant Grantor or any owner, in addition to all other remedies, the right to bring legal action to enjoin such violation or compel compliance with the terms thereof. All costs of such litigation, including reasonable attorney's fees to the prevailing party's attorney shall be paid by the owner found to be in violation.

8. This declaration may be amended at any time to change or alter or rescind any of the Protective Covenants by written amendment executed by the Grantor. Grantor reserves the exclusive right, without the consent of the owner, to release in writing, any of the Protective Covenants, or grant a waiver, in writing, of a violation thereof.

9. Grantor may assign their rights hereunder, at any time, to any person, firm or corporation whomsoever, and such successor shall have all rights of Grantor hereunder including the right of enforcement, waiver or other rights of the Grantor as provided herein. Upon such assignment, Grantor shall have no further liability or obligation hereunder with respect to the property or with respect to any subsequent owner thereof, including any obligation of enforcement or otherwise.

10. Invalidation of any one of the restrictions in this declaration, by judgment or court order, shall not affect any of the other restrictions, which shall remain in full force and effect.

SUBJECT TO: Restrictions, easements and outstanding mineral rights of record, if any, and taxes for the current year.

and said grantor does hereby fully warrant the title to said land, and will defend the same against the lawful claims of all persons whomsoever.

*"Grantor" and "grantee" are used for singular or plural, as context requires.

IN WITNESS WHEREOF, grantor has hereunto set grantor's hand and seal the day and year first above written.

Signed, sealed and delivered
in our presence:

(First Witness)
Terry McDavid
Printed Name

Brian F. Crews (SEAL)

(Second Witness)
DeEtte F. Brown
Printed Name

Karena J. Crews (SEAL)

STATE OF FLORIDA
COUNTY OF COLUMBIA

The foregoing instrument was acknowledged before me this 16th day of January 2009, by BRIAN F. CREWS and his wife, KARENA J. CREWS. They are personally known to me and did not take an oath.

Notary Public
My Commission Expires:_____

TERRY MCDAVID
MY COMMISSION # DD 500788
EXPIRES: January 16, 2010
Bonded Thru Notary Public Underwriters

NOTICE OF INSPECTION AND/OR TREATMENT

Date of Inspection
8-17-09

Date of Treatment
#27985

Date of Spot Treatment
Premise PRO .05%

Pesticide Used
Subterranean Termites

Wood-Destroying Organisms Treated

Notice
It is a violation of Florida State Law (Chap. 482.226) for anyone other than the property owner to remove this notice.

Address:
Pestmaster Services of Lake City
187 SE Country Club Rd., Suite 101 • Lake City, FL 32025