ITW Building Components Group, Inc.

1950 Marley Drive Haines City, FL 33844
Florida Engineering Certificate of Authorization Number: 0 278
Florida Certificate of Product Approval # FL1999
 Document ID:1US59114Z0519164141

WALTER P. FINN LICENSE No. 22839 STATE OF FLORIDA PROFESSIONAL ENGINEER
12/19/2012

Truss Fabricator: **Anderson Truss Company**
Job Identification: **120912--Anderson Truss Co. -Patel Residence -- Lot 1 Hills of Windsor**
Truss Count: **302**
Model Code: **Florida Building Code 2010**
Truss Criteria: **FBC2010Res/TPI-2007(STD)**
Engineering Software: **Alpine Software,Version 10.03.**
Structural Engineer of Record: **The identity of the structural EOR did not exist as of**
Address: **the seal date per section 61G15-31.003(5a) of the FAC**
Minimum Design Loads: **Roof - 40.0 PSF @ 1.25 Duration**
Floor - 55.0 PSF @ 1.00 Duration
Wind - 120 MPH ASCE 7-10 -Closed

Notes:

1. **Determination as to the suitability of these truss components for the structure is the responsibility of the building designer/engineer of record, as defined in ANSI/TPI 1**
2. **The drawing date shown on this index sheet must match the date shown on the individual truss component drawing.**
3. **As shown on attached drawings; the drawing number is preceded by: HCUSR9114**

Walter P. Finn
-Truss Design Engineer-

1950 Marley Drive
Haines City, FL 33844

Details: STRBRIBR-CNSY42PL-BRCLBSUB-PB16010-12030EC1-GBLLETIN-GABRST10-

#	Ref Description	Drawing#	Date
229	87205--R120	12354120	12/19/12
230	87206--R121	12354121	12/19/12
231	87207--R122	12354122	12/19/12
232	87208--PB1	12354123	12/19/12
233	87209--PB2	12354124	12/19/12
234	87210--PB3	12354125	12/19/12
235	87211--PB4	12354147	12/19/12
236	87212--PB5	12354148	12/19/12
237	87213--PB6	12354089	12/19/12
238	87214--PB7	12354090	12/19/12
239	87215--PB8	12354091	12/19/12
240	87216--PB9	12354092	12/19/12
241	87217--PB10 2-PLY	12354093	12/19/12
242	87218--PB11	12354094	12/19/12
243	87219--PB12	12354095	12/19/12
244	87220--PB13	12354096	12/19/12
245	87221--PB14	12354097	12/19/12
246	87222--PB15	12354098	12/19/12
247	87223--PB16	12354099	12/19/12
248	87224--PB17	12354100	12/19/12
249	87225--PB18	12354239	12/19/12
250	87226--PB19	12354149	12/19/12
251	87227--PB20	12354150	12/19/12
252	87228--PB21	12354151	12/19/12
253	87229--PB22	12354152	12/19/12
254	87230--PB23	12354153	12/19/12
255	87231--PB24	12354154	12/19/12
256	87232--PB25	12354155	12/19/12
257	87233--PB26	12354156	12/19/12
258	87234--PB27 2-PLY	12354240	12/19/12
259	87235--PB28	12354241	12/19/12
260	87236--PB29	12354242	12/19/12
261	87237--PB30	12354243	12/19/12
262	87238--PB31	12354244	12/19/12
263	87239--PB32	12354245	12/19/12
264	87240--PB33	12354246	12/19/12
265	87241--PB34	12354247	12/19/12
266	87242--HJ1	12354157	12/19/12

#	Ref Description	Drawing#	Date
267	87243--HJ2	12354158	12/19/12
268	87244--HJ3	12354159	12/19/12
269	87245--HJ4	12354160	12/19/12
270	87246--HJ5	12354161	12/19/12
271	87247--HJ5A	12354162	12/19/12
272	87248--HJ6	12354163	12/19/12
273	87249--HJ7	12354164	12/19/12
274	87250--HJ8	12354165	12/19/12
275	87251--HJ9	12354166	12/19/12
276	87252--HJ10	12354167	12/19/12
277	87253--HJ11	12354168	12/19/12
278	87254--EJ1	12354169	12/19/12
279	87255--EJ2	12354170	12/19/12
280	87256--EJ3	12354171	12/19/12
281	87257--EJ4	12354172	12/19/12
282	87258--EJ5	12354173	12/19/12
283	87259--EJ6	12354174	12/19/12
284	87260--EJ7	12354144	12/19/12
285	87261--EJ7A	12354145	12/19/12
286	87262--EJ7B	12354146	12/19/12
287	87263--CJ1	12354101	12/19/12
288	87264--CJ1A	12354102	12/19/12
289	87265--CJ2	12354103	12/19/12
290	87266--CJ3	12354104	12/19/12
291	87267--CJ3A	12354105	12/19/12
292	87268--CJ3B	12354106	12/19/12
293	87269--CJ4	12354107	12/19/12
294	87270--CJ5	12354108	12/19/12
295	87271--CJ5A	12354109	12/19/12
296	87272--CJ6	12354110	12/19/12
297	87273--CJ7	12354111	12/19/12
298	87274--CJ8	12354112	12/19/12
299	87275--CJ9	12354113	12/19/12
300	87276--CJ10	12354114	12/19/12
301	87277--CJ11	12354115	12/19/12
302	87278--CJ12	12354116	12/19/12

COLUMBIA COUNTY BUILDING DEPARTMENT
Received for FILE COPY
Code Compliance
PLANS EXAMINER

(120912--Anderson Truss Co. -Patel Residence -- Lot 1 Hills Of Windsor , ** - R120)

THIS DWG PREPARED FROM COMPUTER INPUT (LOADS & DIMENSIONS) SUBMITTED BY TRUSS MFR.

Top chord 2x4 SP_#2__12A
Bot chord 2x4 SP_#2__12A
Webs 2x4 SP_#2__12A
:Rt Bearing Leg 2x4 SP_#2__12A:

Lumber grades designated with "12A" use design values approved 1/5/2012 by ALSC.

Left end vertical not exposed to wind pressure.

Deflection meets L/360 live and L/240 total load. Creep increase factor for dead load is 1.50.

120 mph wind, 18.55 ft mean hgt, ASCE 7-10, CLOSED bldg, Located anywhere in roof, RISK CAT II, EXP B, wind TC DL=5.0 psf, wind BC DL=5.0 psf. GCpi(+/-)=0.18

Wind loads and reactions based on MWFRS with additional C&C member design.

(a) Continuous lateral bracing equally spaced on member.

Bottom chord checked for 10.00 psf non-concurrent live load.

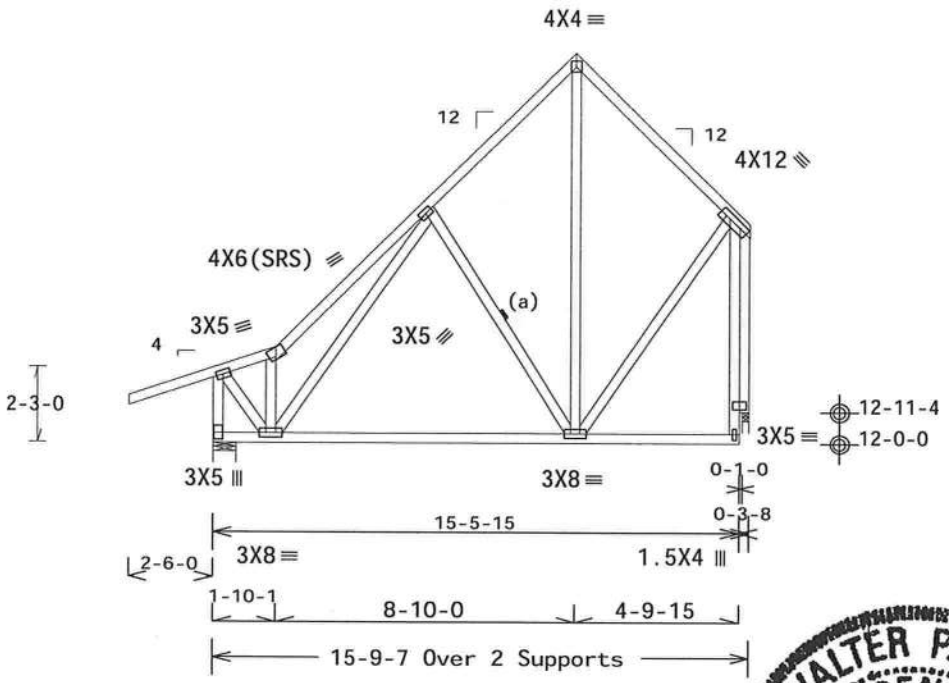

Design Crit: FBC2010Res/TPI-2007(STD)
FT/RT=20%(0%)/10(0)

★0.03 1[illegible]3.10 OT★:

FL/-/5/-/-/R/-

Scale =.1875"/Ft.

PLT TYP. Wave

ALPINE
ITW Building Components Group Inc.
Haines City, FL 33844
FL COA #0 278

WARNING READ AND FOLLOW ALL NOTES ON THIS SHEET!
IMPORTANT FURNISH THIS DESIGN TO ALL CONTRACTORS INCLUDING INSTALLERS.

Trusses require extreme care in fabricating, handling, shipping, installing and bracing. Refer to and follow the latest edition of BCSI (Building Component Safety Information, by TPI and WTCA) for standard practices prior to performing these functions. Installers shall provide temporary bracing per BCSI. Unless noted otherwise, top chord shall have properly attached structural sheathing and bottom chord shall have a properly attached rigid ceiling. Locations shown for permanent lateral restraint of webs shall have bracing installed per BCSI sections B3, B7 or B10, as applicable.

ITW Building Components Group Inc. (ITWBCG) shall not be responsible for any deviation from this design, any failure to build the truss in conformance with ANSI/TPI 1, or for handling, shipping, installation & bracing of trusses. Apply plates to each face of truss and position as shown above and on the Joint Details, unless noted otherwise. Refer to drawings 160A-Z for standard plate positions. A seal on this drawing or cover page listing this drawing, indicates acceptance of professional engineering responsibility solely for the design shown. The suitability and use of this design for any structure is the responsibility of the Building Designer per ANSI/TPI 1 Sec.2. For more information see: This job's general notes page; ITW-BCG: www.itwbcg.com; TPI: www.tpinst.org; WTCA: www.sbcindustry.com; ICC: www.iccsafe.org

WALTER P. FINN
LICENSE
No.22839
STATE OF FLORIDA
PROFESSIONAL ENGINEER
12/19/2012

TC LL	20.0 PSF	REF	R9114- 87205
TC DL	10.0 PSF	DATE	12/19/12
BC DL	10.0 PSF	DRW	HCUSR9114 12354120
BC LL	0.0 PSF	HC-ENG	SSB/WPF
TOT.LD.	40.0 PSF	SEQN-	285546
DUR.FAC.	1.25	FROM	SDY
SPACING	24.0"	JREF-	1US59114Z05

THIS DWG PREPARED FROM COMPUTER INPUT (LOADS & DIMENSIONS) SUBMITTED BY TRUSS MFR.

(120912--Anderson Truss Co. -Patel Residence -- Lot 1 Hills Of Windsor , ** - R121)

Top chord 2x4 SP_#2__12A
Bot chord 2x4 SP_#2__12A
Webs 2x4 SP_#2__12A
:Rt Bearing Leg 2x4 SP_#2__12A:

Lumber grades designated with "12A" use design values approved 1/5/2012 by ALSC.

Left end vertical not exposed to wind pressure.

Deflection meets L/360 live and L/240 total load. Creep increase factor for dead load is 1.50.

120 mph wind, 18.55 ft mean hgt, ASCE 7-10, CLOSED bldg, Located anywhere in roof, RISK CAT II, EXP B, wind TC DL=5.0 psf, wind BC DL=5.0 psf. GCpi(+/-)=0.18

Wind loads and reactions based on MWFRS with additional C&C member design.

(a) Continuous lateral bracing equally spaced on member.

Bottom chord checked for 10.00 psf non-concurrent live load.

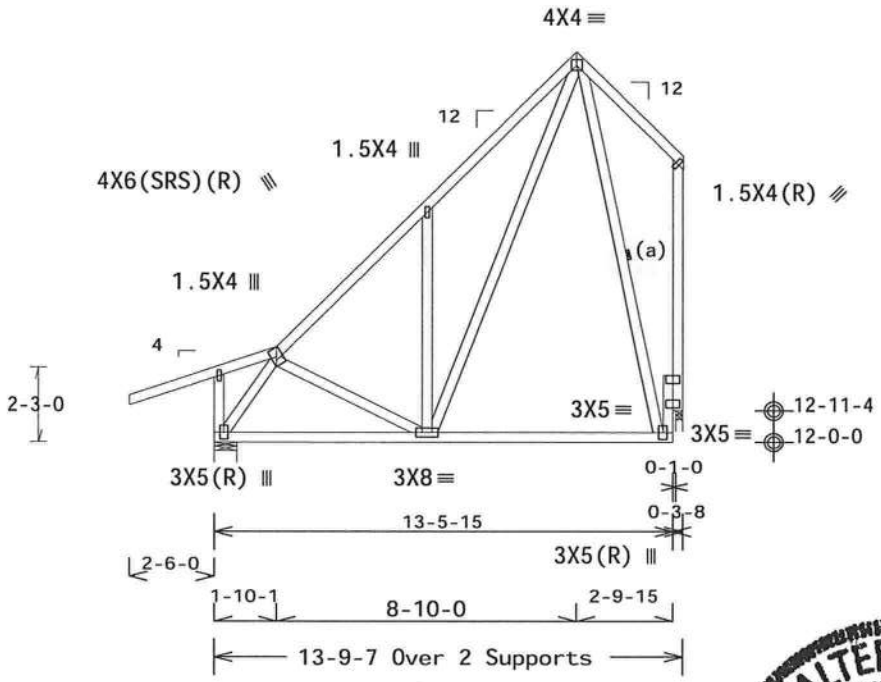

Design Crit: FBC2010Res/TPI-2007(STD)
FT/RT=20%(0%)/10(0)

PLT TYP. Wave

10.03.10.1223.10 QTY:1 FL/-/5/-/-/R/- Scale =.1875"/Ft.

WALTER P. FINN LICENSE No. 22839 STATE OF FLORIDA PROFESSIONAL ENGINEER

12/19/2012

ALPINE
ITW Building Components Group Inc.
Haines City, FL 33844
FL COA #0 278

WARNING READ AND FOLLOW ALL NOTES ON THIS SHEET!
IMPORTANT FURNISH THIS DESIGN TO ALL CONTRACTORS INCLUDING INSTALLERS.

Trusses require extreme care in fabricating, handling, shipping, installing and bracing. Refer to and follow the latest edition of BCSI (Building Component Safety Information, by TPI and WTCA) for safety practices prior to performing these functions. Installers shall provide temporary bracing per BCSI. Unless noted otherwise, top chord shall have properly attached structural sheathing and bottom chord shall have a properly attached rigid ceiling. Locations shown for permanent lateral restraint of webs shall have bracing installed per BCSI sections B3, B7 or B10, as applicable.

ITW Building Components Group Inc. (ITWBCG) shall not be responsible for any deviation from this design, any failure to build the truss in conformance with ANSI/TPI 1, or for handling, shipping, installation and bracing of trusses. Apply plates to each face of truss and position as shown above and on the Joint Details, unless noted otherwise. Refer to drawings 160A-Z for standard plate positions. A seal on this drawing or cover page listing this drawing, indicates acceptance of professional engineering responsibility solely for the design shown. The suitability and use of this design for any structure is the responsibility of the Building Designer per ANSI/TPI 1 Sec.2. For more information see: This job's general notes page; ITW-BCG: www.itwbcg.com; TPI: www.tpinst.org; WTCA: www.sbcindustry.com; ICC: www.iccsafe.org

TC LL	20.0 PSF	REF	R9114- 87206
TC DL	10.0 PSF	DATE	12/19/12
BC DL	10.0 PSF	DRW	HCUSR9114 12354121
BC LL	0.0 PSF	HC-ENG	SSB/WPF
TOT.LD.	40.0 PSF	SEQN-	285547
DUR.FAC.	1.25	FROM	SDY
SPACING	24.0"	JREF-	1US59114Z05

(120912--Anderson Truss Co. -Patel Residence -- Lot 1 Hills Of Windsor , ** - R122)

THIS DWG PREPARED FROM COMPUTER INPUT (LOADS & DIMENSIONS) SUBMITTED BY TRUSS MFR.

Top chord 2x4 SP_#2__12A
Bot chord 2x4 SP_#2__12A
Webs 2x4 SP_#2__12A
:Rt Bearing Leg 2x4 SP_#2__12A:

Lumber grades designated with "12A" use design values approved 1/5/2012 by ALSC.

Left end vertical not exposed to wind pressure.

Deflection meets L/360 live and L/240 total load. Creep increase factor for dead load is 1.50.

120 mph wind, 18.55 ft mean hgt, ASCE 7-10, CLOSED bldg, Located anywhere in roof, RISK CAT II, EXP B, wind TC DL=5.0 psf, wind BC DL=5.0 psf. GCpi(+/-)=0.18

Wind loads and reactions based on MWFRS with additional C&C member design.

(a) Continuous lateral bracing equally spaced on member.

Bottom chord checked for 10.00 psf non-concurrent live load.

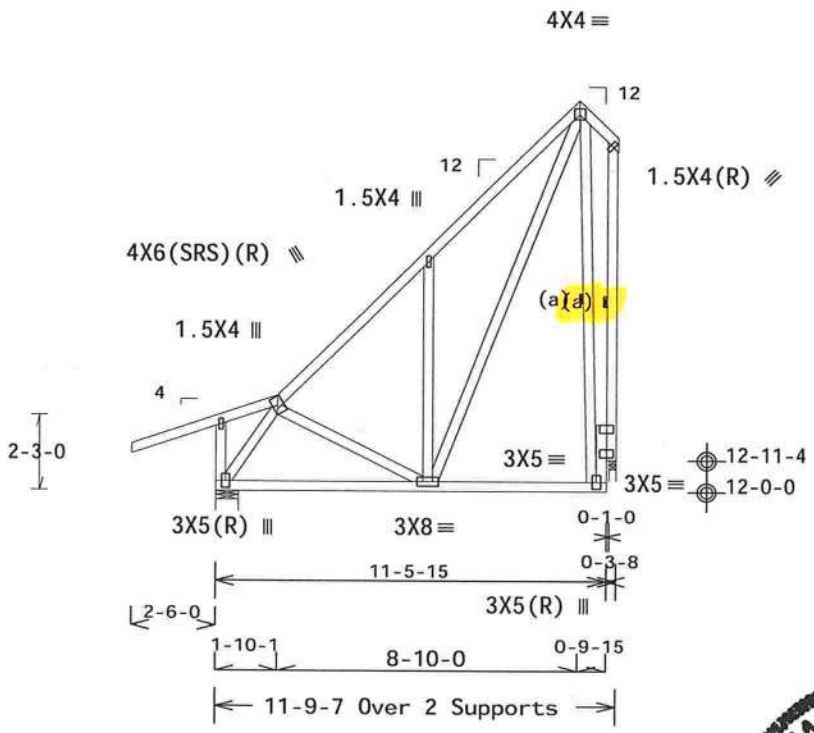

Design Crit: FBC2010Res/TPI-2007(STD)
FT/RT=20%(0%)/10(0)

PLT TYP. Wave

10.03.10 1223.10 QTY 1

FL/-/5/-/-/R/- Scale =.1875"/Ft.

WALTER P. FINN LICENSE No.22839 STATE OF FLORIDA PROFESSIONAL ENGINEER

12/19/2012

TC LL	20.0 PSF	REF	R9114- 87207
TC DL	10.0 PSF	DATE	12/19/12
BC DL	10.0 PSF	DRW	HCUSR9114 12354122
BC LL	0.0 PSF	HC-ENG	SSB/WPF
TOT.LD.	40.0 PSF	SEQN-	285548
DUR.FAC.	1.25	FROM	SDY
SPACING	24.0"	JREF-	1US59114Z05

ALPINE
ITW Building Components Group Inc.
Haines City, FL 33844
FL COA #0 278

WARNING READ AND FOLLOW ALL NOTES ON THIS SHEET!
IMPORTANT FURNISH THIS DESIGN TO ALL CONTRACTORS INCLUDING INSTALLERS.

Trusses require extreme care in fabricating, handling, shipping, installing and bracing. Refer to and follow the latest edition of BCSI (Building Component Safety Information, by TPI and WTCA) for general practices prior to performing these functions. Installers shall provide temporary bracing per BCSI. Unless noted otherwise, top chord shall have properly attached structural sheathing and bottom chord shall have a properly attached rigid ceiling. Locations shown for permanent lateral restraint of webs shall have bracing installed per BCSI sections B3, B7 or B10, as applicable.

ITW Building Components Group Inc. (ITWBCG) shall not be responsible for any deviation from this design, any failure to build the truss in conformance with ANSI/TPI 1, or for handling, shipping, installation and bracing of trusses. Apply plates to each face of truss and position as shown above and on the Joint Details, unless noted otherwise. Refer to drawings 160A-Z for standard plate positions. A seal on this drawing or cover page listing this drawing, indicates acceptance of professional engineering responsibility solely for the design shown. The suitability and use of this design for any structure is the responsibility of the Building Designer per ANSI/TPI 1 Sec.2. For more information see: This job's general notes page; ITW-BCG: www.itwbcg.com; TPI: www.tpinst.org; WTCA: www.sbcindustry.com; ICC: www.iccsafe.org

(120912--Anderson Truss Co. -Patel Residence -- Lot 1 Hills Of Windsor , ** - PB1)

THIS DWG PREPARED FROM COMPUTER INPUT (LOADS & DIMENSIONS) SUBMITTED BY TRUSS MFR.

Top chord 2x4 SP_#2__12A
Bot chord 2x4 SP_#2__12A
Webs 2x4 SP_#2__12A

Lumber grades designated with "12A" use design values approved 1/5/2012 by ALSC.

120 mph wind, 33.40 ft mean hgt, ASCE 7-10, CLOSED bldg, Located anywhere in roof, RISK CAT II, EXP B, wind TC DL=5.0 psf, wind BC DL=2.0 psf. GCpi(+/-)=0.18

Wind loads and reactions based on MWFRS with additional C&C member design.

Refer to drawing PB160100212 for piggyback detail. Top chord of supporting truss under piggyback to be braced @ 24" O.C., unless otherwise specified.

Special loads
------(Lumber Dur.Fac.=1.25 / Plate Dur.Fac.=1.25)

TC- From	68 plf at	0.00 to	68 plf at	2.00
TC- From	68 plf at	2.00 to	68 plf at	4.00
TC- From	68 plf at	4.00 to	68 plf at	6.00
BC- From	4 plf at	0.00 to	4 plf at	6.00

In lieu of rigid ceiling use purlins to brace BC @ 24" OC.

Deflection meets L/360 live and L/240 total load. Creep increase factor for dead load is 1.50.

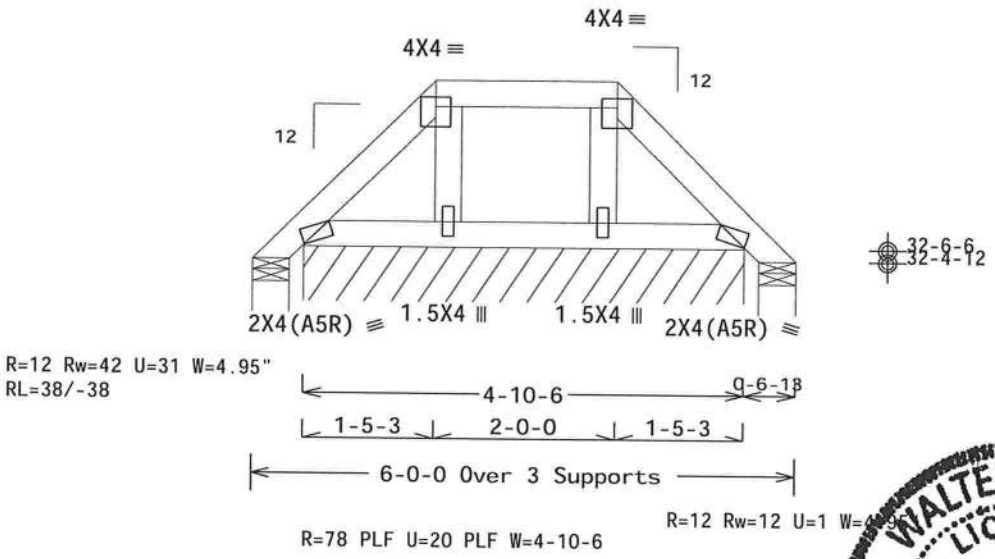

PLT TYP. Wave

Design Crit: FBC2010Res/TPI-2007(STD)
FT/RT=20%(0%)/10(0)

10.03.10.1223.10 QTY:2 FL/-/5/-/-/R/- Scale =.5"/Ft.

WALTER P. FINN LICENSE No.22839 STATE OF FLORIDA PROFESSIONAL ENGINEER

12/19/2012

ALPINE
ITW Building Components Group Inc.
Haines City, FL 33844
FL COA #0 278

WARNING READ AND FOLLOW ALL NOTES ON THIS SHEET!
IMPORTANT FURNISH THIS DESIGN TO ALL CONTRACTORS INCLUDING INSTALLERS.

Trusses require extreme care in fabricating, handling, shipping, installing and bracing. Refer to and follow the latest edition of BCSI (Building Component Safety Information, by TPI and WTCA) for safety practices prior to performing these functions. Installers shall provide temporary bracing per BCSI. Unless noted otherwise, top chord shall have properly attached structural sheathing and bottom chord shall have a properly attached rigid ceiling. Locations shown for permanent lateral restraint of webs shall have bracing installed per BCSI sections B3, B7 or B10, as applicable.

ITW Building Components Group Inc. (ITWBCG) shall not be responsible for any deviation from this drawing, any failure to build the truss in conformance with ANSI/TPI 1, or for handling, shipping, installation and bracing of trusses. Apply plates to each face of truss and position as shown above and on the Joint Details, unless noted otherwise. Refer to drawings 160A-Z for standard plate positions. A seal on this drawing or cover page listing this drawing, indicates acceptance of professional engineering responsibility solely for the design shown. The suitability and use of this design for any structure is the responsibility of the Building Designer per ANSI/TPI 1 Sec.2. For more information see: This job's general notes page; ITW-BCG: www.itwbcg.com; TPI: www.tpinst.org; WTCA: www.sbcindustry.com; ICC: www.iccsafe.org

TC LL	20.0 PSF	REF	R9114- 87208
TC DL	10.0 PSF	DATE	12/19/12
BC DL	10.0 PSF	DRW	HCUSR9114 12354123
BC LL	0.0 PSF	HC-ENG	SSB/WPF
TOT.LD.	40.0 PSF	SEQN-	285549
DUR.FAC.	1.25	FROM	SDY
SPACING	24.0"	JREF-	1US59114Z05

(120912--Anderson Truss Co. -Patel Residence -- Lot 1 Hills Of Windsor , ** - PB2)

THIS DWG PREPARED FROM COMPUTER INPUT (LOADS & DIMENSIONS) SUBMITTED BY TRUSS MFR.

Top chord 2x4 SP_#2__12A
Bot chord 2x4 SP_#2__12A
Webs 2x4 SP_#2__12A

Lumber grades designated with "12A" use design values approved 1/5/2012 by ALSC.

Wind loads and reactions based on MWFRS with additional C&C member design.

In lieu of rigid ceiling use purlins to brace BC @ 24" OC.

Refer to drawing PB160100212 for piggyback detail. Top chord of supporting truss under piggyback to be braced @ 24" O.C., unless otherwise specified.

Special loads
------(Lumber Dur.Fac.=1.25 / Plate Dur.Fac.=1.25)

TC- From	68 plf at	0.00 to	68 plf at	3.00
TC- From	68 plf at	3.00 to	68 plf at	6.00
BC- From	4 plf at	0.00 to	4 plf at	6.00

120 mph wind, 33.90 ft mean hgt, ASCE 7-10, CLOSED bldg, Located anywhere in roof, RISK CAT II, EXP B, wind TC DL=5.0 psf, wind BC DL=2.0 psf. GCpi(+/-)=0.18

Deflection meets L/360 live and L/240 total load. Creep increase factor for dead load is 1.50.

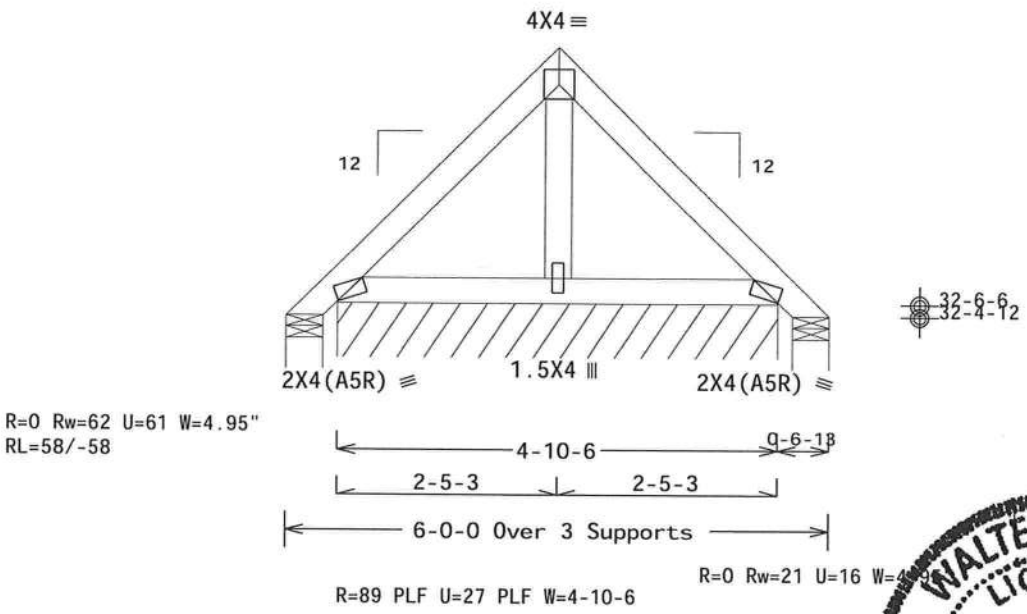

WALTER P. FINN LICENSE No. 22839 STATE OF FLORIDA PROFESSIONAL ENGINEER

12/19/2012

PLT TYP. Wave

Design Crit: FBC2010Res/TPI-2007(STD)
FT/RT=20%(0%)/10(0) 10.03.10 1223.10 QTY 15 FL/-/5/-/-/R/- Scale =.5"/Ft.

ALPINE
ITW Building Components Group Inc.
Haines City, FL 33844
FL COA #0 278

WARNING READ AND FOLLOW ALL NOTES ON THIS SHEET!
IMPORTANT FURNISH THIS DESIGN TO ALL CONTRACTORS INCLUDING INSTALLERS.

Trusses require extreme care in fabricating, handling, shipping, installing and bracing. Refer to and follow the latest edition of BCSI (Building Component Safety Information, by TPI and WTCA) for safety practices prior to performing these functions. Installers shall provide temporary bracing per BCSI. Unless noted otherwise, top chord shall have properly attached structural sheathing and bottom chord shall have a properly attached rigid ceiling. Locations shown for permanent lateral restraint of webs shall have bracing installed per BCSI sections B3, B7 or B10, as applicable.

ITW Building Components Group Inc. (ITWBCG) shall not be responsible for any deviation from this design, any failure to build the truss in conformance with ANSI/TPI 1, or for handling, shipping, installation and bracing of trusses. Apply plates to each face of truss and position as shown above and on the Joint Details, unless noted otherwise. Refer to drawings 160A-Z for standard plate positions. A seal on this drawing or cover page listing this drawing, indicates acceptance of professional engineering responsibility solely for the design shown. The suitability and use of this design for any structure is the responsibility of the Building Designer per ANSI/TPI 1 Sec.2. For more information see: This job's general notes page; ITW-BCG: www.itwbcg.com; TPI: www.tpinst.org; WTCA: www.sbcindustry.com; ICC: www.iccsafe.org

TC LL	20.0 PSF	REF	R9114- 87209
TC DL	10.0 PSF	DATE	12/19/12
BC DL	10.0 PSF	DRW	HCUSR9114 12354124
BC LL	0.0 PSF	HC-ENG	SSB/WPF
TOT.LD.	40.0 PSF	SEQN-	285550
DUR.FAC.	1.25	FROM	SDY
SPACING	24.0"	JREF-	1US59114Z05

(120912--Anderson Truss Co. -Patel Residence -- Lot 1 Hills Of Windsor , ** - PB3)

THIS DWG PREPARED FROM COMPUTER INPUT (LOADS & DIMENSIONS) SUBMITTED BY TRUSS MFR.

Top chord 2x4 SP_#2__12A
Bot chord 2x4 SP_#2__12A
Webs 2x4 SP_#2__12A

Lumber grades designated with "12A" use design values approved 1/5/2012 by ALSC.

120 mph wind, 37.40 ft mean hgt, ASCE 7-10, CLOSED bldg, not located within 9.00 ft from roof edge, RISK CAT II, EXP B, wind TC DL=5.0 psf, wind BC DL=2.0 psf. GCpi(+/-)=0.18

Wind loads and reactions based on MWFRS with additional C&C member design.

MWFRS loads based on trusses located at least 18.70 ft. from roof edge.

Refer to drawing PB160100212 for piggyback detail. Top chord of supporting truss under piggyback to be braced @ 24" O.C., unless otherwise specified.

Special loads
------(Lumber Dur.Fac.=1.25 / Plate Dur.Fac.=1.25)

TC- From	68 plf at	0.00 to	68 plf at	2.00
TC- From	68 plf at	2.00 to	68 plf at	11.85
TC- From	68 plf at	11.85 to	68 plf at	24.00
TC- From	68 plf at	24.00 to	68 plf at	26.00
BC- From	4 plf at	0.00 to	4 plf at	10.15
BC- From	4 plf at	10.15 to	4 plf at	26.00

In lieu of rigid ceiling use purlins to brace BC @ 24" OC.

Deflection meets L/360 live and L/240 total load. Creep increase factor for dead load is 1.50.

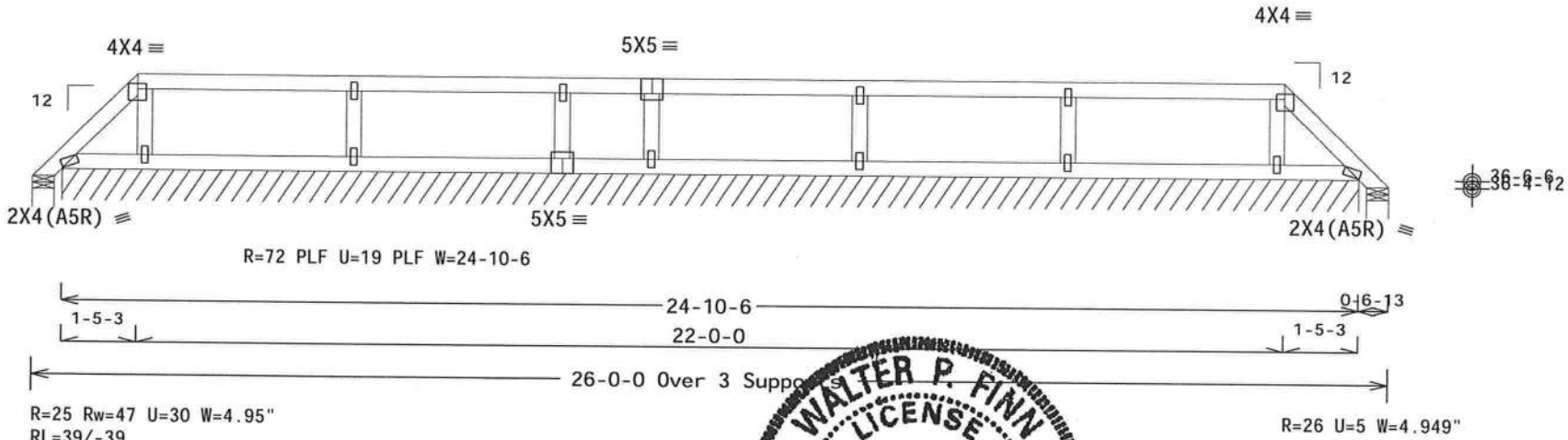

Note: All Plates Are 1.5X4 Except As Shown.

Design Crit: FBC2010Res/TPI-2007(STD)

PLT TYP. Wave

FT/RT=20%(0%)/10(0)

10.03.10.1.23.10 OTK

FL/-/5/-/-/R/-

Scale =.3125"/Ft.

WALTER P. FINN
LICENSE
No. 22839
STATE OF FLORIDA
PROFESSIONAL ENGINEER

12/19/2012

ALPINE
ITW Building Components Group Inc.
Haines City, FL 33844
FL COA #0 278

WARNING READ AND FOLLOW ALL NOTES ON THIS SHEET!
IMPORTANT FURNISH THIS DESIGN TO ALL CONTRACTORS INCLUDING INSTALLERS.

Trusses require extreme care in fabricating, handling, shipping, installing and bracing. Refer to and follow the latest edition of BCSI (Building Component Safety Information, by TPI and WTCA) for general guidelines practices prior to performing these functions. Installers shall provide temporary bracing per BCSI. Unless noted otherwise, top chord shall have properly attached structural sheathing and bottom chord shall have a properly attached rigid ceiling. Locations shown for permanent lateral restraint of webs shall have bracing installed per BCSI sections B3, B7 or B10, as applicable.

ITW Building Components Group Inc. (ITWBCG) shall not be responsible for any deviation from this design, any failure to build the truss in conformance with ANSI/TPI 1, or for handling, shipping, installation & bracing of trusses. Apply plates to each face of truss and position as shown above and on the Joint Details, unless noted otherwise. Refer to drawings 160A-Z for standard plate positions. A seal on this drawing or cover page listing this drawing, indicates acceptance of professional engineering responsibility solely for the design shown. The suitability and use of this design for any structure is the responsibility of the Building Designer per ANSI/TPI 1 Sec.2. For more information see: This job's general notes page; ITW-BCG: www.itwbcg.com; TPI: www.tpinst.org; WTCA: www.sbcindustry.com; ICC: www.iccsafe.org

TC LL	20.0 PSF	REF	R9114- 87210
TC DL	10.0 PSF	DATE	12/19/12
BC DL	10.0 PSF	DRW	HCUSR9114 12354125
BC LL	0.0 PSF	HC-ENG	SSB/WPF
TOT.LD.	40.0 PSF	SEQN-	285551
DUR.FAC.	1.25	FROM	SDY
SPACING	24.0"	JREF-	1US59114Z05

(120912--Anderson Truss Co. -Patel Residence -- Lot 1 Hills Of Windsor , ** - PB4)

THIS DWG PREPARED FROM COMPUTER INPUT (LOADS & DIMENSIONS) SUBMITTED BY TRUSS MFR.

Top chord 2x4 SP_#2__12A
Bot chord 2x4 SP_#2__12A
Webs 2x4 SP_#2__12A

Lumber grades designated with "12A" use design values approved 1/5/2012 by ALSC.

120 mph wind, 38.40 ft mean hgt, ASCE 7-10, CLOSED bldg, not located within 9.00 ft from roof edge, RISK CAT II, EXP B, wind TC DL=5.0 psf, wind BC DL=2.0 psf. GCpi(+/-)=0.18

Wind loads and reactions based on MWFRS with additional C&C member design.

MWFRS loads based on trusses located at least 19.20 ft. from roof edge.

Refer to drawing PB160100212 for piggyback detail. Top chord of supporting truss under piggyback to be braced @ 24" O.C., unless otherwise specified.

Special loads
------(Lumber Dur.Fac.=1.25 / Plate Dur.Fac.=1.25)

TC- From	68 plf at	0.00 to	68 plf at	4.00
TC- From	68 plf at	4.00 to	68 plf at	13.00
TC- From	68 plf at	13.00 to	68 plf at	22.00
TC- From	68 plf at	22.00 to	68 plf at	26.00
BC- From	4 plf at	0.00 to	4 plf at	13.00
BC- From	4 plf at	13.00 to	4 plf at	26.00

In lieu of rigid ceiling use purlins to brace BC @ 24" OC.

Deflection meets L/360 live and L/240 total load. Creep increase factor for dead load is 1.50.

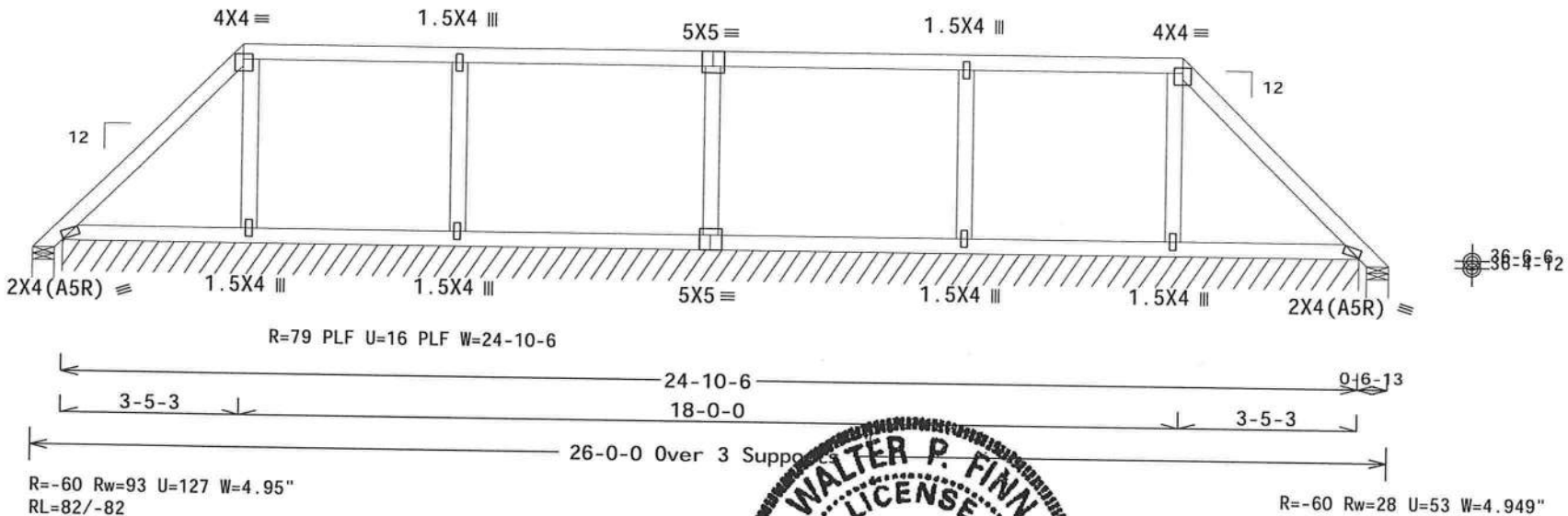

PLT TYP. Wave

Design Crit: FBC2010Res/TPI-2007(STD)
FT/RT=20%(0%)/10(0) ★10.03.10 1323.10 QTY 1 FL/-/5/-/-/R/- Scale =.3125"/Ft.

WALTER P. FINN LICENSE No.22839 STATE OF FLORIDA PROFESSIONAL ENGINEER

12/19/2012

ALPINE
ITW Building Components Group Inc.
Haines City, FL 33844
FL COA #0 278

WARNING READ AND FOLLOW ALL NOTES ON THIS SHEET!
IMPORTANT FURNISH THIS DESIGN TO ALL CONTRACTORS INCLUDING INSTALLERS.

Trusses require extreme care in fabricating, handling, shipping, installing and bracing. Refer to and follow the latest edition of BCSI (Building Component Safety Information, by TPI and WTCA) for safety practices prior to performing these functions. Installers shall provide temporary bracing per BCSI. Unless noted otherwise, top chord shall have properly attached structural sheathing and bottom chord shall have a properly attached rigid ceiling. Locations shown for permanent lateral restraint of webs shall have bracing installed per BCSI sections B3, B7 or B10, as applicable.

ITW Building Components Group Inc. (ITWBCG) shall not be responsible for any deviation from this design, any failure to build the truss in conformance with ANSI/TPI 1, or for handling, shipping, installation and bracing of trusses. Apply plates to each face of truss and position as shown above and on the Joint Details, unless noted otherwise. Refer to drawings 160A-Z for standard plate positions. A seal on this drawing or cover page listing this drawing, indicates acceptance of professional engineering responsibility solely for the design shown. The suitability and use of this design for any structure is the responsibility of the Building Designer per ANSI/TPI 1 Sec.2. For more information see: This job's general notes page; ITW-BCG: www.itwbcg.com; TPI: www.tpinst.org; WTCA: www.sbcindustry.com; ICC: www.iccsafe.org

TC LL	20.0 PSF	REF	R9114- 87211
TC DL	10.0 PSF	DATE	12/19/12
BC DL	10.0 PSF	DRW	HCUSR9114 12354147
BC LL	0.0 PSF	HC-ENG	SSB/WPF
TOT.LD.	40.0 PSF	SEQN-	285552
DUR.FAC.	1.25	FROM	SDY
SPACING	24.0"	JREF-	1US59114Z05

(120912--Anderson Truss Co. -Patel Residence -- Lot 1 Hills Of Windsor , ** - PB5)

THIS DWG PREPARED FROM COMPUTER INPUT (LOADS & DIMENSIONS) SUBMITTED BY TRUSS MFR.

Top chord 2x4 SP_#2__12A
Bot chord 2x4 SP_#2__12A
Webs 2x4 SP_#2__12A

Lumber grades designated with "12A" use design values approved 1/5/2012 by ALSC.

Negative reaction(s) of -185# MAX. (See below) from a non-wind load case requires uplift connection.

Wind loads and reactions based on MWFRS with additional C&C member design.

Deflection meets L/360 live and L/240 total load. Creep increase factor for dead load is 1.50.

Refer to drawing PB160100212 for piggyback detail. Top chord of supporting truss under piggyback to be braced @ 24" O.C., unless otherwise specified.

Special loads
------(Lumber Dur.Fac.=1.25 / Plate Dur.Fac.=1.25)

TC- From	68 plf at	0.00 to	68 plf at	6.00
TC- From	68 plf at	6.00 to	68 plf at	20.00
TC- From	68 plf at	20.00 to	68 plf at	26.00
BC- From	4 plf at	0.00 to	4 plf at	13.00
BC- From	4 plf at	13.00 to	4 plf at	26.00

120 mph wind, 39.40 ft mean hgt, ASCE 7-10, CLOSED bldg, not located within 9.00 ft from roof edge, RISK CAT II, EXP B, wind TC DL=5.0 psf, wind BC DL=2.0 psf. GCpi(+/-)=0.18

In lieu of rigid ceiling use purlins to brace BC @ 24" OC.

MWFRS loads based on trusses located at least 19.70 ft. from roof edge.

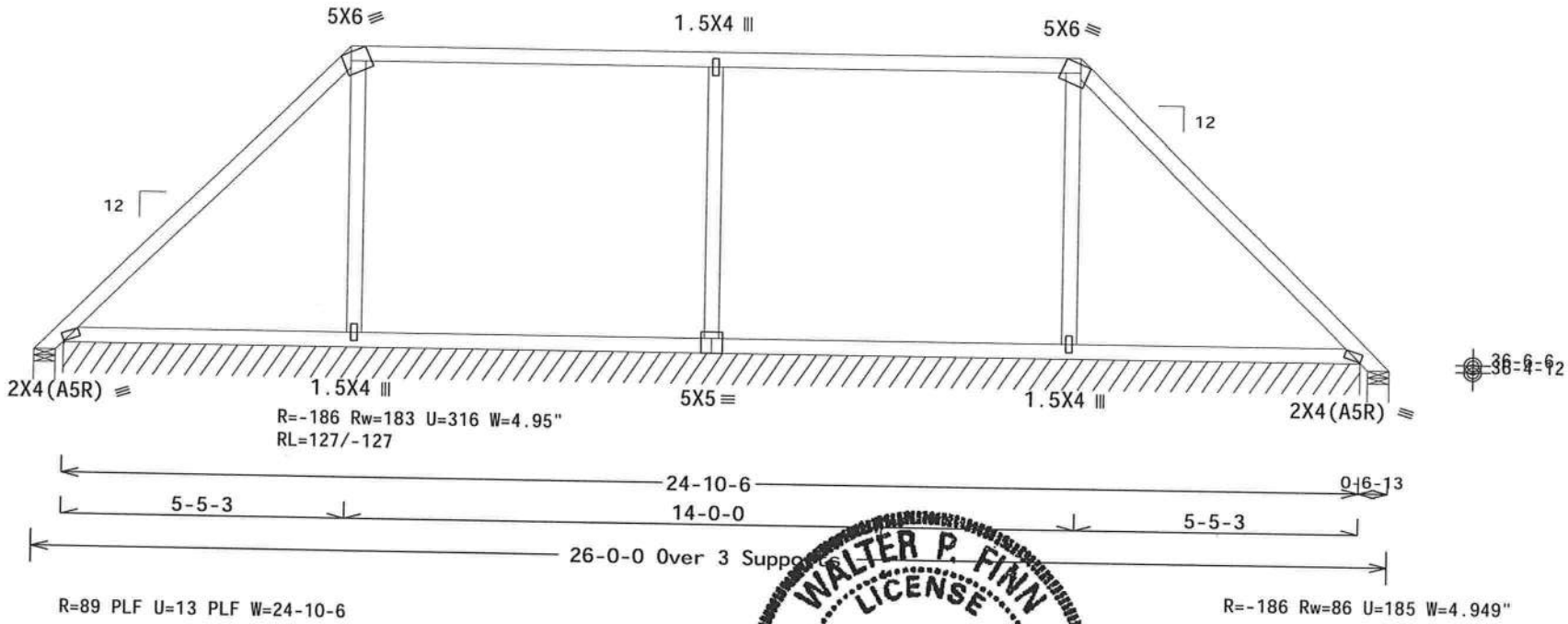

PLT TYP. Wave

Design Crit: FBC2010Res/TPI-2007(STD)
FT/RT=20%(0%)/10(0)

★0.03 10.1★3.70 QTY:

FL/-/5/-/-/R/-

Scale =.3125"/Ft.

WALTER P. FINN
LICENSE
No.22839
STATE OF FLORIDA
PROFESSIONAL ENGINEER
12/19/2012

ALPINE
ITW Building Components Group Inc.
Haines City, FL 33844
FL COA #0 278

WARNING READ AND FOLLOW ALL NOTES ON THIS SHEET!
IMPORTANT FURNISH THIS DESIGN TO ALL CONTRACTORS INCLUDING INSTALLERS.

Trusses require extreme care in fabricating, handling, shipping, installing and bracing. Refer to and follow the latest edition of BCSI (Building Component Safety Information, by TPI and WTCA) for general practices prior to performing these functions. Installers shall provide temporary bracing per BCSI. Unless noted otherwise, top chord shall have properly attached structural sheathing and bottom chord shall have a properly attached rigid ceiling. Locations shown for permanent lateral restraint of webs shall have bracing installed per BCSI sections B3, B7 or B10, as applicable.

ITW Building Components Group Inc. (ITWBCG) shall not be responsible for any deviation from this design, any failure to build the truss in conformance with ANSI/TPI 1, or for handling, shipping, installation & bracing of trusses. Apply plates to each face of truss and position as shown above and on the Joint Details, unless noted otherwise. Refer to drawings 160A-Z for standard plate positions. A seal on this drawing or cover page listing this drawing, indicates acceptance of professional engineering responsibility solely for the design shown. The suitability and use of this design for any structure is the responsibility of the Building Designer per ANSI/TPI 1 Sec.2. For more information see: This job's general notes page; ITW-BCG: www.itwbcg.com; TPI: www.tpinst.org; WTCA: www.sbcindustry.com; ICC: www.iccsafe.org

TC LL	20.0 PSF	REF	R9114- 87212
TC DL	10.0 PSF	DATE	12/19/12
BC DL	10.0 PSF	DRW	HCUSR9114 12354148
BC LL	0.0 PSF	HC-ENG	SSB/WPF
TOT.LD.	40.0 PSF	SEQN-	285553
DUR.FAC.	1.25	FROM	SDY
SPACING	24.0"	JREF-	1US59114Z05

(120912--Anderson Truss Co. -Patel Residence -- Lot 1 Hills Of Windsor , ** - PB6)

THIS DWG PREPARED FROM COMPUTER INPUT (LOADS & DIMENSIONS) SUBMITTED BY TRUSS MFR.

Top chord 2x4 SP_#2__12A
Bot chord 2x4 SP_#2__12A
Webs 2x4 SP_#2__12A

Lumber grades designated with "12A" use design values approved 1/5/2012 by ALSC.

120 mph wind, 40.06 ft mean hgt, ASCE 7-10, CLOSED bldg, not located within 9.00 ft from roof edge, RISK CAT II, EXP B, wind TC DL=5.0 psf, wind BC DL=2.0 psf. GCpi(+/-)=0.18

Wind loads and reactions based on MWFRS with additional C&C member design.

Deflection meets L/360 live and L/240 total load. Creep increase factor for dead load is 1.50.

Refer to drawing PB160100212 for piggyback detail. Top chord of supporting truss under piggyback to be braced @ 24" O.C., unless otherwise specified.

Special loads
------(Lumber Dur.Fac.=1.25 / Plate Dur.Fac.=1.25)

TC- From	68 plf at	0.00 to	68 plf at	2.00
TC- From	68 plf at	2.00 to	68 plf at	4.33
TC- From	68 plf at	4.33 to	68 plf at	11.00
TC- From	68 plf at	11.00 to	68 plf at	21.00
TC- From	68 plf at	21.00 to	68 plf at	29.62
BC- From	4 plf at	0.00 to	4 plf at	12.00
BC- From	4 plf at	12.00 to	4 plf at	20.00
BC- From	4 plf at	20.00 to	4 plf at	29.62

(a) Continuous lateral bracing equally spaced on member.

In lieu of rigid ceiling use purlins to brace BC @ 24" OC.

MWFRS loads based on trusses located at least 20.03 ft. from roof edge.

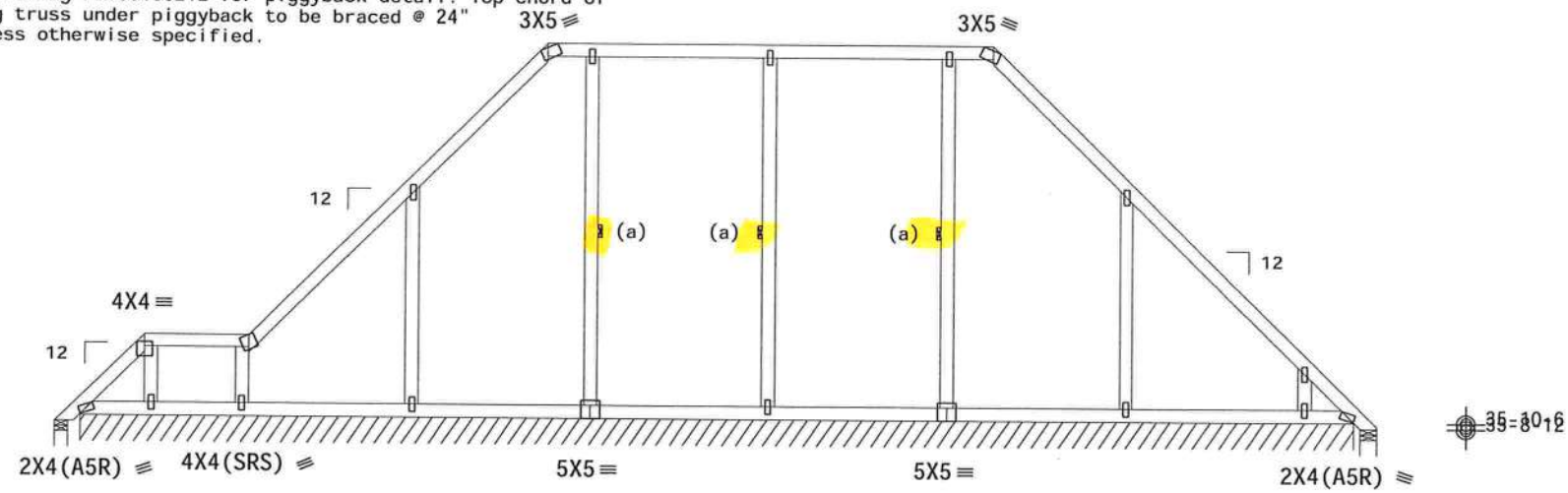

Note: All Plates Are 1.5X4 Except As Shown.

Design Crit: FBC2010Res/TPI-2007(STD)

PLT TYP. Wave

FT/RT=20%(0%)/10(0)

10.03.10.1823.10 DT:

FL/-/5/-/-/R/-

Scale =.25"/Ft.

WALTER P. FINN LICENSE No.22839 STATE OF FLORIDA PROFESSIONAL ENGINEER

12/19/2012

ALPINE
ITW Building Components Group Inc.
Haines City, FL 33844
FL COA #0 278

WARNING READ AND FOLLOW ALL NOTES ON THIS SHEET!
IMPORTANT FURNISH THIS DESIGN TO ALL CONTRACTORS INCLUDING INSTALLERS.

Trusses require extreme care in fabricating, handling, shipping, installing and bracing. Refer to and follow the latest edition of BCSI (Building Component Safety Information, by TPI and WTCA) for general guidelines practices prior to performing these functions. Installers shall provide temporary bracing per BCSI. Unless noted otherwise, top chord shall have properly attached structural sheathing and bottom chord shall have a properly attached rigid ceiling. Locations shown for permanent lateral restraint of webs shall have bracing installed per BCSI sections B3, B7 or B10, as applicable.

ITW Building Components Group Inc. (ITWBCG) shall not be responsible for any deviation from this design, any failure to build the truss in conformance with ANSI/TPI 1, or for handling, shipping, installation & bracing of trusses. Apply plates to each face of truss and position as shown above and on the Joint Details, unless noted otherwise. Refer to drawings 160A-Z for standard plate positions. A seal on this drawing or cover page listing this drawing, indicates acceptance of professional engineering responsibility solely for the design shown. The suitability and use of this design for any structure is the responsibility of the Building Designer per ANSI/TPI 1 Sec.2. For more information see: This job's general notes page; ITW-BCG: www.itwbcg.com; TPI: www.tpinst.org; WTCA: www.sbcindustry.com; ICC: www.iccsafe.org

TC LL	20.0 PSF	REF	R9114- 87213
TC DL	10.0 PSF	DATE	12/19/12
BC DL	10.0 PSF	DRW	HCUSR9114 12354089
BC LL	0.0 PSF	HC-ENG	SSB/WPF
TOT.LD.	40.0 PSF	SEQN-	285554
DUR.FAC.	1.25	FROM	SDY
SPACING	24.0"	JREF-	1US59114Z05

(120912--Anderson Truss Co. -Patel Residence -- Lot 1 Hills Of Windsor , ** - PB7)

THIS DWG PREPARED FROM COMPUTER INPUT (LOADS & DIMENSIONS) SUBMITTED BY TRUSS MFR.

Top chord 2x4 SP_#2__12A
Bot chord 2x4 SP_#2__12A
Webs 2x4 SP_#2__12A

Lumber grades designated with "12A" use design values approved 1/5/2012 by ALSC.

120 mph wind, 41.06 ft mean hgt, ASCE 7-10, CLOSED bldg, not located within 9.00 ft from roof edge, RISK CAT II, EXP B, wind TC DL=5.0 psf, wind BC DL=2.0 psf. GCpi(+/-)=0.18

Wind loads and reactions based on MWFRS with additional C&C member design.

Deflection meets L/360 live and L/240 total load. Creep increase factor for dead load is 1.50.

Refer to drawing PB160100212 for piggyback detail. Top chord of supporting truss under piggyback to be braced @ 24" O.C., unless otherwise specified.

Special loads
------(Lumber Dur.Fac.=1.25 / Plate Dur.Fac.=1.25)

TC- From	68 plf at	0.00 to	68 plf at	4.00
TC- From	68 plf at	4.00 to	68 plf at	6.33
TC- From	68 plf at	6.33 to	68 plf at	13.00
TC- From	68 plf at	13.00 to	68 plf at	19.00
TC- From	68 plf at	19.00 to	68 plf at	27.65
BC- From	4 plf at	0.00 to	4 plf at	13.15
BC- From	4 plf at	13.15 to	4 plf at	27.65

(a) Continuous lateral bracing equally spaced on member.

In lieu of rigid ceiling use purlins to brace BC @ 24" OC.

MWFRS loads based on trusses located at least 20.53 ft. from roof edge.

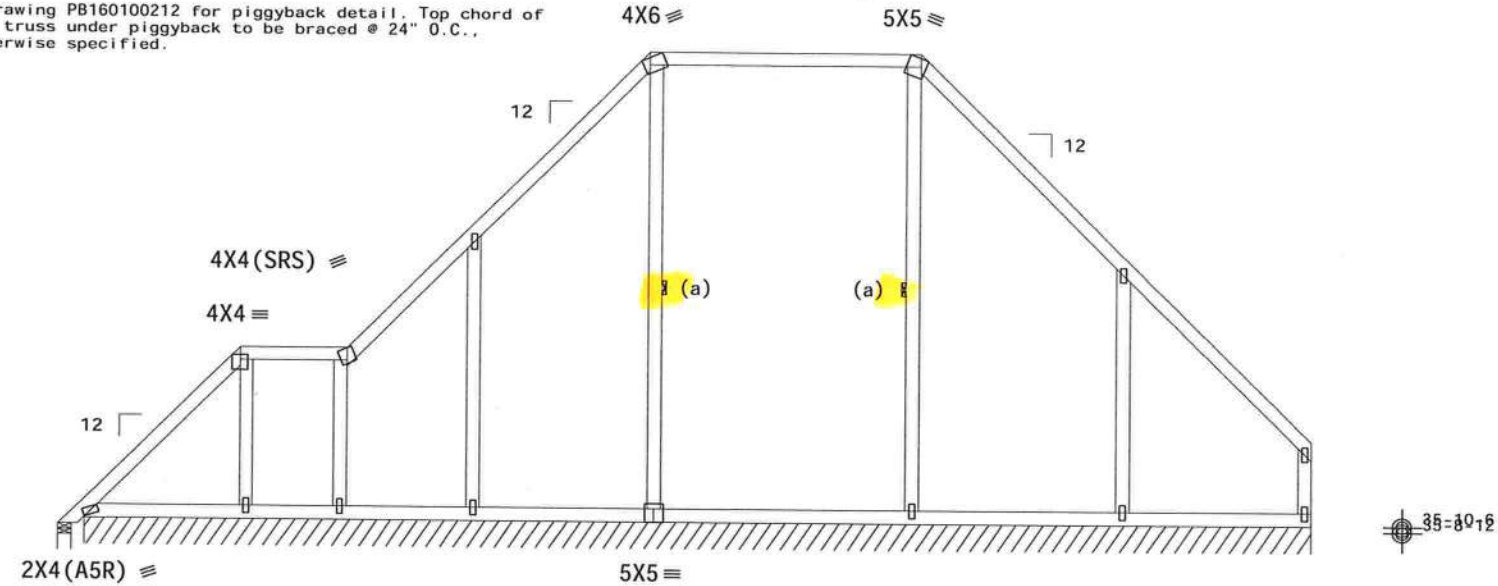

R=76 PLF U=8 PLF W=27-0-15

3-5-3 | 2-4-0 | 6-8-0 | 6-0-0 | 8-7-12

27-7-12 Over 2 Supports

R=-77 Rw=220 U=243 W=3.5"
RL=218/-205

Note: All Plates Are 1.5X4 Except As Shown.

PLT TYP. Wave

Design Crit: FBC2010Res/TPI-2007(STD)
FT/RT=20%(0%)/10(0)

WALTER P. FINN LICENSE No.22839 STATE OF FLORIDA PROFESSIONAL ENGINEER

12/19/2012

FL/-/5/-/-/R/-

Scale =.25"/Ft.

TC LL	20.0 PSF	REF	R9114- 87214
TC DL	10.0 PSF	DATE	12/19/12
BC DL	10.0 PSF	DRW	HCUSR9114 12354090
BC LL	0.0 PSF	HC-ENG	SSB/WPF
TOT.LD.	40.0 PSF	SEQN-	285555
DUR.FAC.	1.25	FROM	SDY
SPACING	24.0"	JREF-	1US59114Z05

ALPINE
ITW Building Components Group Inc.
Haines City, FL 33844
FL COA #0 278

WARNING READ AND FOLLOW ALL NOTES ON THIS SHEET!
IMPORTANT FURNISH THIS DESIGN TO ALL CONTRACTORS INCLUDING INSTALLERS.

Trusses require extreme care in fabricating, handling, shipping, installing and bracing. Refer to and follow the latest edition of BCSI (Building Component Safety Information, by TPI and WTCA) for general guidelines practices prior to performing these functions. Installers shall provide temporary bracing per BCSI. Unless noted otherwise, top chord shall have properly attached structural sheathing and bottom chord shall have a properly attached rigid ceiling. Locations shown for permanent lateral restraint of webs shall have bracing installed per BCSI sections B3, B7 or B10, as applicable.

ITW Building Components Group Inc. (ITWBCG) shall not be responsible for any deviation from this design, any failure to build the truss in conformance with ANSI/TPI 1, or for handling, shipping, installation & bracing of trusses. Apply plates to each face of truss and position as shown above and on the Joint Details, unless noted otherwise. Refer to drawings 160A-Z for standard plate positions. A seal on this drawing or cover page listing this drawing, indicates acceptance of professional engineering responsibility solely for the design shown. The suitability and use of this design for any structure is the responsibility of the Building Designer per ANSI/TPI 1 Sec.2. For more information see: This job's general notes page; ITW-BCG: www.itwbcg.com; TPI: www.tpinst.org; WTCA: www.sbcindustry.com; ICC: www.iccsafe.org

THIS DWG PREPARED FROM COMPUTER INPUT (LOADS & DIMENSIONS) SUBMITTED BY TRUSS MFR.

(120912--Anderson Truss Co. -Patel Residence -- Lot 1 Hills Of Windsor , ** - PB8)

Top chord 2x4 SP_#2__12A
Bot chord 2x4 SP_#2__12A
Webs 2x4 SP_#2__12A

Lumber grades designated with "12A" use design values approved 1/5/2012 by ALSC.

(a) Continuous lateral bracing equally spaced on member.

Bottom chord checked for 10.00 psf non-concurrent live load.

Deflection meets L/360 live and L/240 total load. Creep increase factor for dead load is 1.50.

Refer to drawing PB160100212 for piggyback detail. Top chord of supporting truss under piggyback to be braced @ 24" O.C., unless otherwise specified.

Negative reaction(s) of -350# MAX. (See below) from a non-wind load case requires uplift connection.

120 mph wind, 40.96 ft mean hgt, ASCE 7-10, CLOSED bldg, not located within 9.00 ft from roof edge, RISK CAT II, EXP B, wind TC DL=5.0 psf, wind BC DL=5.0 psf. GCpi(+/-)=0.18

Wind loads and reactions based on MWFRS with additional C&C member design.

Right end vertical not exposed to wind pressure.

MWFRS loads based on trusses located at least 20.48 ft. from roof edge.

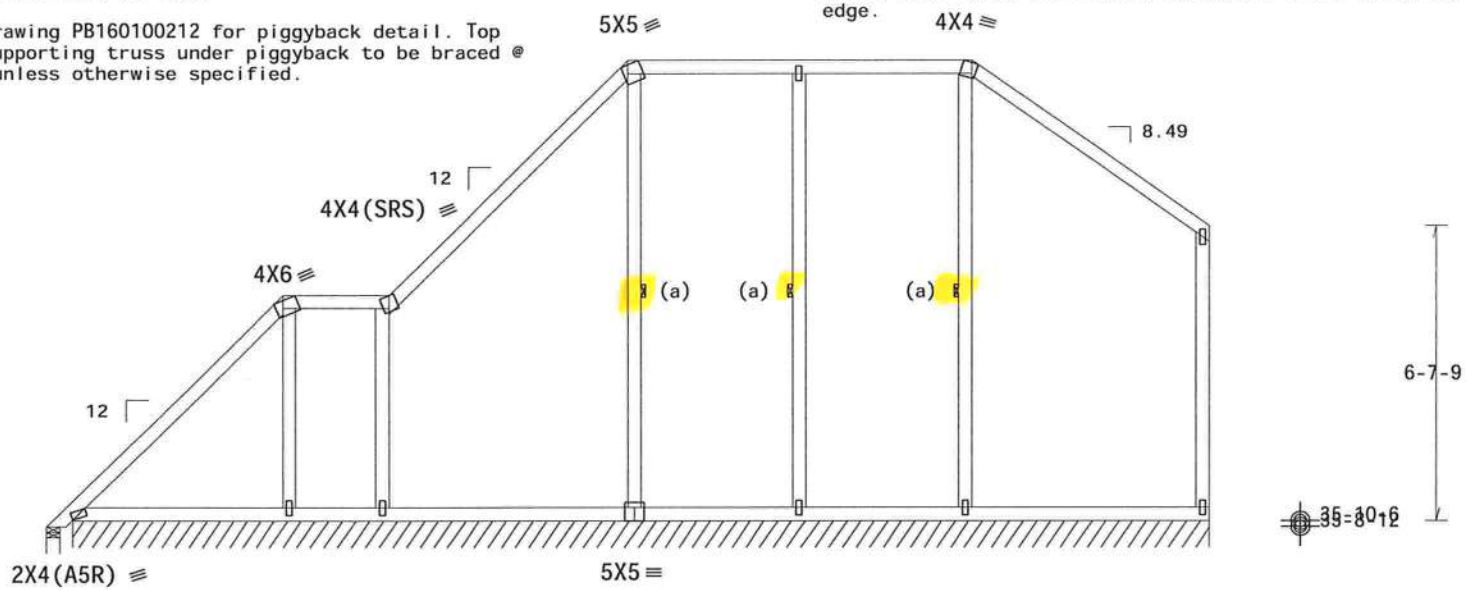

R=-350 Rw=59 U=171 W=3.5"
RL=94/-92

Note: All Plates Are 1.5X4 Except As Shown.

Design Crit: FBC2010Res/TPI-2007(STD)

PLT TYP. Wave

FT/RT=20%(0%)/10(0)

10.03.10.1223.10

QTY 1

FL/-/5/-/-/R/-

Scale =.25"/Ft.

WALTER P. FINN LICENSE No.22839 STATE OF FLORIDA PROFESSIONAL ENGINEER

12/19/2012

ALPINE

ITW Building Components Group Inc.

Haines City, FL 33844
FL COA #0 278

WARNING READ AND FOLLOW ALL NOTES ON THIS SHEET!
IMPORTANT FURNISH THIS DESIGN TO ALL CONTRACTORS INCLUDING INSTALLERS.

Trusses require extreme care in fabricating, handling, shipping, installing and bracing. Refer to, and follow the latest edition of BCSI (Building Component Safety Information, by TPI and WTCA) for general guidelines practices prior to performing these functions. Installers shall provide temporary bracing per BCSI. Unless noted otherwise, top chord shall have properly attached structural sheathing and bottom chord shall have a properly attached rigid ceiling. Locations shown for permanent lateral restraint of webs shall have bracing installed per BCSI sections B3, B7 or B10, as applicable.

ITW Building Components Group Inc. (ITWBCG) shall not be responsible for any deviation from this design, any failure to build the truss in conformance with ANSI/TPI 1, or for handling, shipping, installation and bracing of trusses. Apply plates to each face of truss and position as shown above and on the Joint Details, unless noted otherwise. Refer to drawings 160A-Z for standard plate positions. A seal on this drawing or cover page listing this drawing, indicates acceptance of professional engineering responsibility solely for the design shown. The suitability and use of this design for any structure is the responsibility of the Building Designer per ANSI/TPI 1 Sec.2. For more information see: This job's general notes page: ITW-BCG: www.itwbcg.com; TPI: www.tpinst.org; WTCA: www.sbcindustry.com; ICC: www.iccsafe.org

TC LL	20.0 PSF	REF	R9114- 87215
TC DL	10.0 PSF	DATE	12/19/12
BC DL	10.0 PSF	DRW	HCUSR9114 12354091
BC LL	0.0 PSF	HC-ENG	SSB/WPF
TOT.LD.	40.0 PSF	SEQN-	285556
DUR.FAC.	1.25	FROM	SDY
SPACING	24.0"	JREF-	1US59114Z05

(120912--Anderson Truss Co. -Patel Residence -- Lot 1 Hills Of Windsor , ** - PB9)

THIS DWG PREPARED FROM COMPUTER INPUT (LOADS & DIMENSIONS) SUBMITTED BY TRUSS MFR.

Top chord 2x4 SP_#2__12A
Bot chord 2x4 SP_#2__12A
Webs 2x4 SP_#2__12A

Lumber grades designated with "12A" use design values approved 1/5/2012 by ALSC.

(a) Continuous lateral bracing equally spaced on member.

Bottom chord checked for 10.00 psf non-concurrent live load.

MWFRS loads based on trusses located at least 20.48 ft. from roof edge.

Refer to drawing PB160100212 for piggyback detail. Top chord of supporting truss under piggyback to be braced @ 24" O.C., unless otherwise specified.

120 mph wind, 40.96 ft mean hgt, ASCE 7-10, CLOSED bldg, not located within 9.00 ft from roof edge, RISK CAT II, EXP B, wind TC DL=5.0 psf, wind BC DL=5.0 psf. GCpi(+/-)=0.18

Wind loads and reactions based on MWFRS with additional C&C member design.

Right end vertical not exposed to wind pressure.

Deflection meets L/360 live and L/240 total load. Creep increase factor for dead load is 1.50.

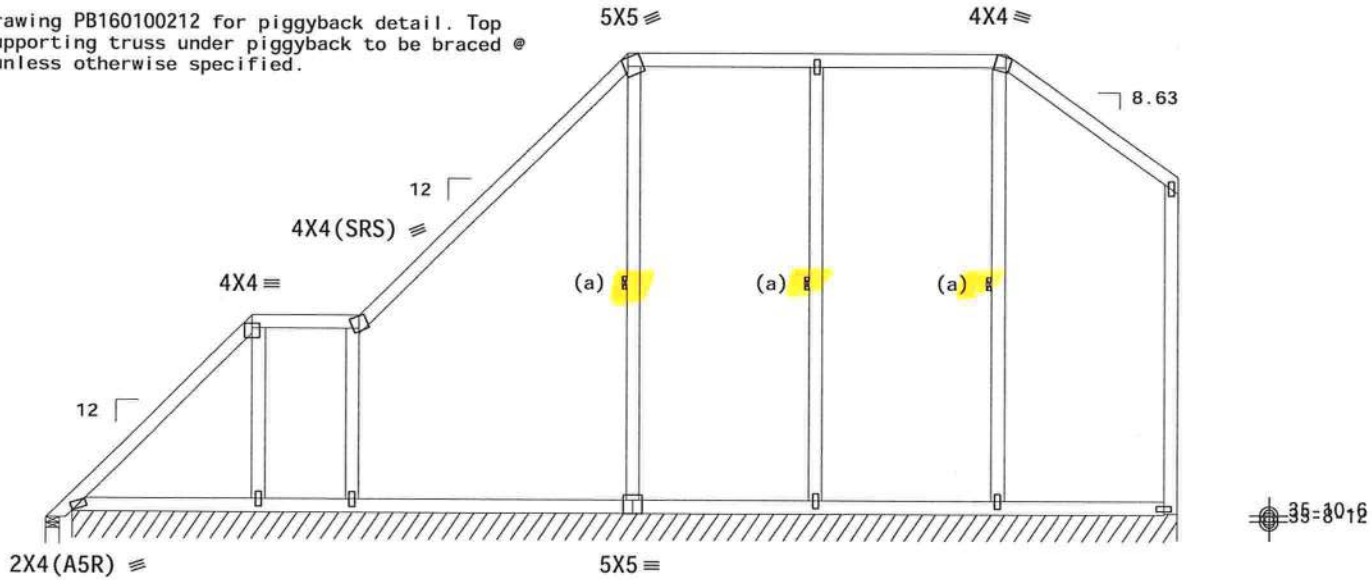

R=93 PLF U=10 PLF W=24-4-14

3-11-11 | 2-4-0 | 5-11-2 | 8-4-2 | 3-10-0

24-11-12 Over 2 Supports

R=-141 Rw=181 U=206 W=3.5"
RL=166/-117

Note: All Plates Are 1.5X4 Except As Shown.

Design Crit: FBC2010Res/TPI-2007(STD)
FT/RT=20%(0%)/10(0)

PLT TYP. Wave

10.03.10.1623.10

FL/-/5/-/-/R/-

Scale =.25"/Ft.

TC LL	20.0 PSF	REF	R9114- 87216
TC DL	10.0 PSF	DATE	12/19/12
BC DL	10.0 PSF	DRW	HCUSR9114 12354092
BC LL	0.0 PSF	HC-ENG	SSB/WPF
TOT.LD.	40.0 PSF	SEQN-	285557
DUR.FAC.	1.25	FROM	SDY
SPACING	24.0"	JREF-	1US59114Z05

ALPINE
ITW Building Components Group Inc.
Haines City, FL 33844
FL COA #0 278

WARNING READ AND FOLLOW ALL NOTES ON THIS SHEET!
IMPORTANT FURNISH THIS DESIGN TO ALL CONTRACTORS INCLUDING INSTALLERS.

Trusses require extreme care in fabricating, handling, shipping, installing and bracing. Refer to and follow the latest edition of BCSI (Building Component Safety Information, by TPI and WTCA) for general practices prior to performing these functions. Installers shall provide temporary bracing per BCSI. Unless noted otherwise, top chord shall have properly attached structural sheathing and bottom chord shall have a properly attached rigid ceiling. Locations shown for permanent lateral restraint of webs shall have bracing installed per BCSI sections B3, B7 or B10, as applicable.

ITW Building Components Group Inc. (ITWBCG) shall not be responsible for any deviation from this design, any failure to build the truss in conformance with ANSI/TPI 1, or for handling, shipping, installation & bracing of trusses. Apply plates to each face of truss and position as shown above and on the Joint Details, unless noted otherwise. Refer to drawings 160A-Z for standard plate positions. A seal on this drawing or cover page listing this drawing, indicates acceptance of professional engineering responsibility solely for the design shown. The suitability and use of this design for any structure is the responsibility of the Building Designer per ANSI/TPI 1 Sec.2. For more information see: This job's general notes page; ITW-BCG: www.itwbcg.com; TPI: www.tpinst.org; WTCA: www.sbcindustry.com; ICC: www.iccsafe.org

WALTER P. FINN
LICENSE
No.22839
STATE OF FLORIDA
PROFESSIONAL ENGINEER

12/19/2012

THIS DWG PREPARED FROM COMPUTER INPUT (LOADS & DIMENSIONS) SUBMITTED BY TRUSS MFR.

(120912--Anderson Truss Co. -Patel Residence -- Lot 1 Hills Of Windsor , ** - PB10 2-PLY)

Top chord 2x4 SP_#2__12A
Bot chord 2x4 SP_#2__12A
Webs 2x4 SP_#2__12A

Lumber grades designated with "12A" use design values approved 1/5/2012 by ALSC.

120 mph wind, 40.96 ft mean hgt, ASCE 7-10, CLOSED bldg, not located within 9.00 ft from roof edge, RISK CAT II, EXP B, wind TC DL=5.0 psf, wind BC DL=5.0 psf. GCpi(+/-)=0.18

Bottom chord checked for 10.00 psf non-concurrent live load.

Deflection meets L/360 live and L/240 total load. Creep increase factor for dead load is 1.50.

MWFRS loads based on trusses located at least 40.96 ft. from roof edge.

2 COMPLETE TRUSSES REQUIRED

Nail Schedule:0.128"x3", min. nails
Top Chord: 1 Row @12.00" o.c.
Bot Chord: 1 Row @12.00" o.c.
Webs : 1 Row @ 4" o.c.
Use equal spacing between rows and stagger nails in each row to avoid splitting.

Wind loads and reactions based on MWFRS with additional C&C member design.

Right end vertical not exposed to wind pressure.

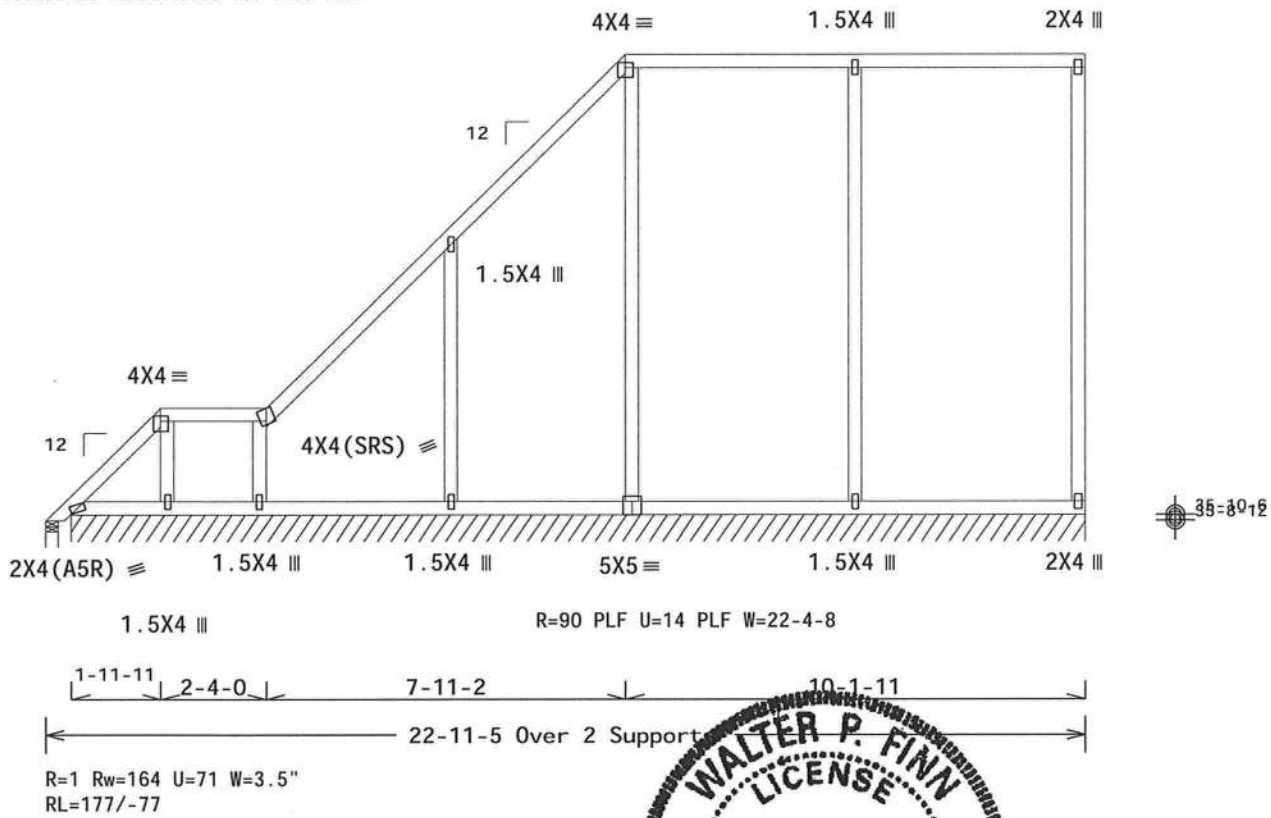

Design Crit: FBC2010Res/TPI-2007(STD)
FT/RT=20%(0%)/10(0)

PLT TYP. Wave

10.03.10 1223.10 QTY 1

FL/-/5/-/-/R/-

Scale =.25"/Ft.

WALTER P. FINN LICENSE No.22839 STATE OF FLORIDA PROFESSIONAL ENGINEER

12/19/2012

ALPINE
ITW Building Components Group Inc.
Haines City, FL 33844
FL COA #0 278

WARNING READ AND FOLLOW ALL NOTES ON THIS SHEET!
IMPORTANT FURNISH THIS DESIGN TO ALL CONTRACTORS INCLUDING INSTALLERS.

Trusses require extreme care in fabricating, handling, shipping, installing and bracing. Refer to and follow the latest edition of BCSI (Building Component Safety Information, by TPI and WTCA) for safety practices prior to performing these functions. Installers shall provide temporary bracing per BCSI. Unless noted otherwise, top chord shall have properly attached structural sheathing and bottom chord shall have a properly attached rigid ceiling. Locations shown for permanent lateral restraint of webs shall have bracing installed per BCSI sections B3, B7 or B10, as applicable.

ITW Building Components Group Inc. (ITWBCG) shall not be responsible for any deviation from this design, any failure to build the truss in conformance with ANSI/TPI 1, or for handling, shipping, installation and bracing of trusses. Apply plates to each face of truss and position as shown above and on the Joint Details, unless noted otherwise. Refer to drawings 160A-Z for standard plate positions. A seal on this drawing or cover page listing this drawing, indicates acceptance of professional engineering responsibility solely for the design shown. The suitability and use of this design for any structure is the responsibility of the Building Designer per ANSI/TPI 1 Sec.2. For more information see: This job's general notes page; ITW-BCG: www.itwbcg.com; TPI: www.tpinst.org; WTCA: www.sbcindustry.com; ICC: www.iccsafe.org

TC LL	20.0 PSF	REF	R9114- 87217
TC DL	10.0 PSF	DATE	12/19/12
BC DL	10.0 PSF	DRW	HCUSR9114 12354093
BC LL	0.0 PSF	HC-ENG	SSB/WPF
TOT.LD.	40.0 PSF	SEQN-	285638
DUR.FAC.	1.25	FROM	SDY
SPACING	24.0"	JREF-	1US59114Z05

(120912--Anderson Truss Co. -Patel Residence -- Lot 1 Hills Of Windsor , ** - PB11)

Top chord 2x4 SP_#2__12A
Bot chord 2x4 SP_#2__12A
Webs 2x4 SP_#2__12A

Lumber grades designated with "12A" use design values approved 1/5/2012 by ALSC.

Wind loads and reactions based on MWFRS with additional C&C member design.

In lieu of rigid ceiling use purlins to brace BC @ 24" OC.

MWFRS loads based on trusses located at least 38.39 ft. from roof edge.

Refer to drawing PB160100212 for piggyback detail. Top chord of supporting truss under piggyback to be braced @ 24" O.C., unless otherwise specified.

Special loads
------(Lumber Dur.Fac.=1.25 / Plate Dur.Fac.=1.25)
TC- From 68 plf at 0.00 to 68 plf at 3.99
BC- From 4 plf at 0.00 to 4 plf at 3.99

120 mph wind, 38.39 ft mean hgt, ASCE 7-10, CLOSED bldg, Located anywhere in roof, RISK CAT II, EXP B, wind TC DL=5.0 psf, wind BC DL=2.0 psf. GCpi(+/-)=0.18

Right end vertical not exposed to wind pressure.

Deflection meets L/360 live and L/240 total load. Creep increase factor for dead load is 1.50.

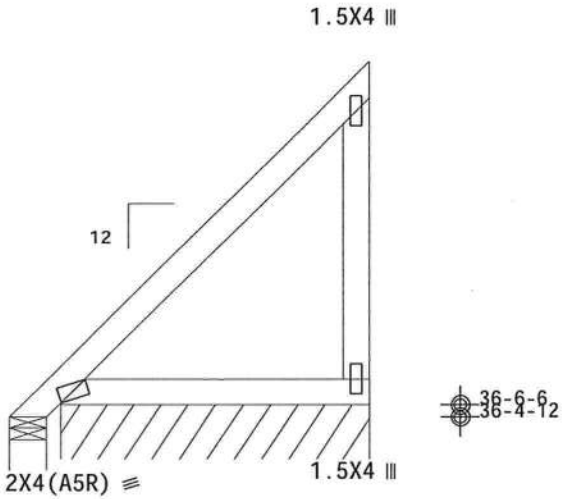

R=108 PLF U=30 PLF W=3-5-0

3-11-14 Over 2 Supports

R=-97 Rw=89 U=96 W=4.95"
RL=66/-30

Design Crit: FBC2010Res/TPI-2007(STD)
FT/RT=20%(0%)/10(0) 10.03.10 1223.10 QTY 18 FL/-/5/-/-/R/- Scale =.5"/Ft.

PLT TYP. Wave

WALTER P. FINN LICENSE No.22839 STATE OF FLORIDA PROFESSIONAL ENGINEER
12/19/2012

ALPINE
ITW Building Components Group Inc.
Haines City, FL 33844
FL COA #0 278

WARNING READ AND FOLLOW ALL NOTES ON THIS SHEET!
IMPORTANT FURNISH THIS DESIGN TO ALL CONTRACTORS INCLUDING INSTALLERS.

Trusses require extreme care in fabricating, handling, shipping, installing and bracing. Refer to and follow the latest edition of BCSI (Building Component Safety Information, by TPI and WTCA) regarding safety practices prior to performing these functions. Installers shall provide temporary bracing per BCSI. Unless noted otherwise, top chord shall have properly attached structural sheathing and bottom chord shall have a properly attached rigid ceiling. Locations shown for permanent lateral restraint of webs shall have bracing installed per BCSI sections B3, B7 or B10, as applicable.

ITW Building Components Group Inc. (ITWBCG) shall not be responsible for any deviation from this design, any failure to build the truss in conformance with ANSI/TPI 1, or for handling, shipping, installation and bracing of trusses. Apply plates to each face of truss and position as shown above and on the Joint Details, unless noted otherwise. Refer to drawings 160A-Z for standard plate positions. A seal on this drawing or cover page listing this drawing, indicates acceptance of professional engineering responsibility solely for the design shown. The suitability and use of this design for any structure is the responsibility of the Building Designer per ANSI/TPI 1 Sec.2. For more information see: This job's general notes page: ITW-BCG: www.itwbcg.com; TPI: www.tpinst.org; WTCA: www.sbcindustry.com; ICC: www.iccsafe.org

TC LL	20.0 PSF	REF	R9114- 87218
TC DL	10.0 PSF	DATE	12/19/12
BC DL	10.0 PSF	DRW	HCUSR9114 12354094
BC LL	0.0 PSF	HC-ENG	SSB/WPF
TOT.LD.	40.0 PSF	SEQN-	285558
DUR.FAC.	1.25	FROM	SDY
SPACING	24.0"	JREF-	1US59114Z05

(120912--Anderson Truss Co. -Patel Residence -- Lot 1 Hills Of Windsor , ** - PB12)

Top chord 2x4 SP_#2__12A
Bot chord 2x4 SP_#2__12A
Webs 2x4 SP_#2__12A

Lumber grades designated with "12A" use design values approved 1/5/2012 by ALSC.

Wind loads and reactions based on MWFRS with additional C&C member design.

In lieu of rigid ceiling use purlins to brace BC @ 24" OC.

Refer to drawing PB160100212 for piggyback detail. Top chord of supporting truss under piggyback to be braced @ 24" O.C., unless otherwise specified.

Special loads
------(Lumber Dur.Fac.=1.25 / Plate Dur.Fac.=1.25)

TC- From	68 plf at	0.00 to	68 plf at	1.46
TC- From	64 plf at	1.46 to	64 plf at	3.52
BC- From	4 plf at	0.00 to	4 plf at	3.52

120 mph wind, 37.13 ft mean hgt, ASCE 7-10, CLOSED bldg, Located anywhere in roof, RISK CAT II, EXP B, wind TC DL=5.0 psf, wind BC DL=2.0 psf. GCpi(+/-)=0.18

Deflection meets L/360 live and L/240 total load. Creep increase factor for dead load is 1.50.

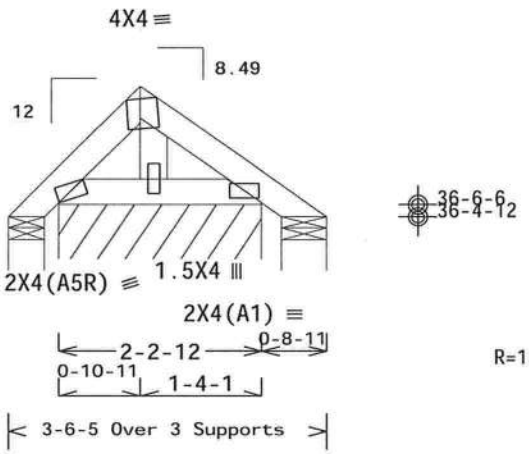

R=17 Rw=30 U=17 W=4.95"
RL=25/-28

R=15 U=6 W=6.062"

R=82 PLF U=19 PLF W=2-2-12

Design Crit: FBC2010Res/TPI-2007(STD)
FT/RT=20%(0%)/10(0)

PLT TYP. Wave

★0.03.10.1★3.10 OTH★:

FL/-/5/-/-/R/-

Scale =.5"/Ft.

WALTER P. FINN
LICENSE
No.22839
STATE OF FLORIDA
PROFESSIONAL ENGINEER
12/19/2012

TC LL	20.0 PSF	REF	R9114- 87219
TC DL	10.0 PSF	DATE	12/19/12
BC DL	10.0 PSF	DRW	HCUSR9114 12354095
BC LL	0.0 PSF	HC-ENG	SSB/WPF
TOT.LD.	40.0 PSF	SEQN-	285559
DUR.FAC.	1.25	FROM	SDY
SPACING	24.0"	JREF-	1US59114Z05

ALPINE
ITW Building Components Group Inc.
Haines City, FL 33844
FL COA #0 278

WARNING READ AND FOLLOW ALL NOTES ON THIS SHEET!
IMPORTANT FURNISH THIS DESIGN TO ALL CONTRACTORS INCLUDING INSTALLERS.

Trusses require extreme care in fabricating, handling, shipping, installing and bracing. Refer to and follow the latest edition of BCSI (Building Component Safety Information, by TPI and WTCA) for good practices prior to performing these functions. Installers shall provide temporary bracing per BCSI. Unless noted otherwise, top chord shall have properly attached structural sheathing and bottom chord shall have a properly attached rigid ceiling. Locations shown for permanent lateral restraint of webs shall have bracing installed per BCSI sections B3, B7 or B10, as applicable.

ITW Building Components Group Inc. (ITWBCG) shall not be responsible for any deviation from this design, any failure to build the truss in conformance with ANSI/TPI 1, or for handling, shipping, installation & bracing of trusses. Apply plates to each face of truss and position as shown above and on the Joint Details, unless noted otherwise. Refer to drawings 160A-Z for standard plate positions. A seal on this drawing or cover page listing this drawing, indicates acceptance of professional engineering responsibility solely for the design shown. The suitability and use of this design for any structure is the responsibility of the Building Designer per ANSI/TPI 1 Sec.2. For more information see: This job's general notes page; ITW-BCG: www.itwbcg.com; TPI: www.tpinst.org; WTCA: www.sbcindustry.com; ICC: www.iccsafe.org

THIS DWG PREPARED FROM COMPUTER INPUT (LOADS & DIMENSIONS) SUBMITTED BY TRUSS MFR.

(120912--Anderson Truss Co. -Patel Residence -- Lot 1 Hills Of Windsor , ** - PB13)

Top chord 2x4 SP_#2__12A
Bot chord 2x4 SP_#2__12A
Webs 2x4 SP_#2__12A

Lumber grades designated with "12A" use design values approved 1/5/2012 by ALSC.

Wind loads and reactions based on MWFRS with additional C&C member design.

In lieu of rigid ceiling use purlins to brace BC @ 24" OC.

Refer to drawing PB160100212 for piggyback detail. Top chord of supporting truss under piggyback to be braced @ 24" O.C., unless otherwise specified.

Special loads
------(Lumber Dur.Fac.=1.25 / Plate Dur.Fac.=1.25)

TC- From	68 plf at	0.00 to	68 plf at	2.29
TC- From	64 plf at	2.29 to	64 plf at	5.52
BC- From	4 plf at	0.00 to	4 plf at	5.52

120 mph wind, 37.54 ft mean hgt, ASCE 7-10, CLOSED bldg, Located anywhere in roof, RISK CAT II, EXP B, wind TC DL=5.0 psf, wind BC DL=2.0 psf. GCpi(+/-)=0.18

Deflection meets L/360 live and L/240 total load. Creep increase factor for dead load is 1.50.

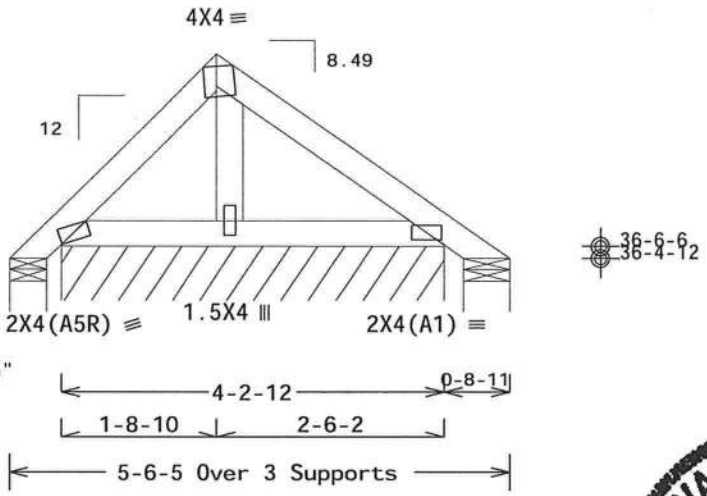

Design Crit: FBC2010Res/TPI-2007(STD)
FT/RT=20%(0%)/10(0)

PLT TYP. Wave

10.03.10. 1223.10 QTY:

FL/-/5/-/-/R/-

Scale =.5"/Ft.

WALTER P. FINN LICENSE No. 22839 STATE OF FLORIDA PROFESSIONAL ENGINEER

12/19/2012

TC LL	20.0 PSF	REF R9114- 87220
TC DL	10.0 PSF	DATE 12/19/12
BC DL	10.0 PSF	DRW HCUSR9114 12354096
BC LL	0.0 PSF	HC-ENG SSB/WPF
TOT.LD.	40.0 PSF	SEQN- 285560
DUR.FAC.	1.25	FROM SDY
SPACING	24.0"	JREF- 1US59114Z05

ALPINE
ITW Building Components Group Inc.
Haines City, FL 33844
FL COA #0 278

WARNING READ AND FOLLOW ALL NOTES ON THIS SHEET!
IMPORTANT FURNISH THIS DESIGN TO ALL CONTRACTORS INCLUDING INSTALLERS.

Trusses require extreme care in fabricating, handling, shipping, installing and bracing. Refer to and follow the latest edition of BCSI (Building Component Safety Information, by TPI and WTCA) for standard practices prior to performing these functions. Installers shall provide temporary bracing per BCSI. Unless noted otherwise, top chord shall have properly attached structural sheathing and bottom chord shall have a properly attached rigid ceiling. Locations shown for permanent lateral restraint of webs shall have bracing installed per BCSI sections B3, B7 or B10, as applicable.

ITW Building Components Group Inc. (ITWBCG) shall not be responsible for any deviation from this design, any failure to build the truss in conformance with ANSI/TPI 1, or for handling, shipping, installation & bracing of trusses. Apply plates to each face of truss and position as shown above and on the Joint Details, unless noted otherwise. Refer to drawings 160A-Z for standard plate positions. A seal on this drawing or cover page listing this drawing, indicates acceptance of professional engineering responsibility solely for the design shown. The suitability and use of this design for any structure is the responsibility of the Building Designer per ANSI/TPI 1 Sec.2. For more information see: This job's general notes page; ITW-BCG: www.itwbcg.com; TPI: www.tpinst.org; WTCA: www.sbcindustry.com; ICC: www.iccsafe.org

THIS DWG PREPARED FROM COMPUTER INPUT (LOADS & DIMENSIONS) SUBMITTED BY TRUSS MFR.

(120912--Anderson Truss Co. -Patel Residence -- Lot 1 Hills Of Windsor , ** - PB14)

Top chord 2x4 SP_#2__12A
Bot chord 2x4 SP_#2__12A
Webs 2x4 SP_#2__12A

Lumber grades designated with "12A" use design values approved 1/5/2012 by ALSC.

Wind loads and reactions based on MWFRS with additional C&C member design.

In lieu of rigid ceiling use purlins to brace BC @ 24" OC.

Refer to drawing PB160100212 for piggyback detail. Top chord of supporting truss under piggyback to be braced @ 24" O.C., unless otherwise specified.

Special loads
------(Lumber Dur.Fac.=1.25 / Plate Dur.Fac.=1.25)

TC- From	68 plf at	0.00 to	68 plf at	3.12
TC- From	64 plf at	3.12 to	64 plf at	7.52
BC- From	4 plf at	0.00 to	4 plf at	7.52

120 mph wind, 37.95 ft mean hgt, ASCE 7-10, CLOSED bldg, Located anywhere in roof, RISK CAT II, EXP B, wind TC DL=5.0 psf, wind BC DL=2.0 psf. GCpi(+/-)=0.18

Deflection meets L/360 live and L/240 total load. Creep increase factor for dead load is 1.50.

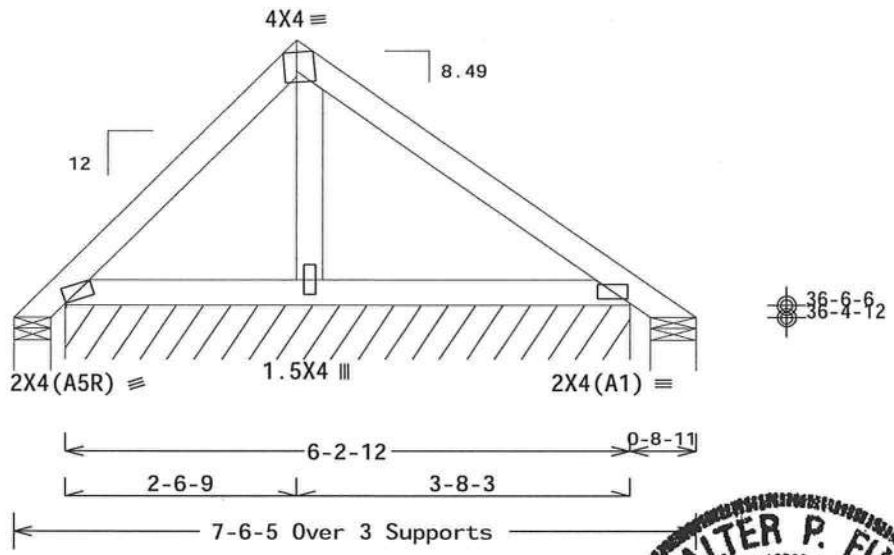

Design Crit: FBC2010Res/TPI-2007(STD)
FT/RT=20%(0%)/10(0)

PLT TYP. Wave | 10.03.10.1223.10 | QTY 1 | FL/-/5/-/-/R/- | Scale =.5"/Ft.

ALPINE
ITW Building Components Group Inc.
Haines City, FL 33844
FL COA #0 278

WARNING READ AND FOLLOW ALL NOTES ON THIS SHEET!
IMPORTANT FURNISH THIS DESIGN TO ALL CONTRACTORS INCLUDING INSTALLERS.

Trusses require extreme care in fabricating, handling, shipping, installing and bracing. Refer to and follow the latest edition of BCSI (Building Component Safety Information, by TPI and WTCA) regarding safety practices prior to performing these functions. Installers shall provide temporary bracing per BCSI. Unless noted otherwise, top chord shall have properly attached structural sheathing and bottom chord shall have a properly attached rigid ceiling. Locations shown for permanent lateral restraint of webs shall have bracing installed per BCSI sections B3, B7 or B10, as applicable.

ITW Building Components Group Inc. (ITWBCG) shall not be responsible for any deviation from this design, any failure to build the truss in conformance with ANSI/TPI 1, or for handling, shipping, installation and bracing of trusses. Apply plates to each face of truss and position as shown above and on the Joint Details, unless noted otherwise. Refer to drawings 160A-Z for standard plate positions. A seal on this drawing or cover page listing this drawing, indicates acceptance of professional engineering responsibility solely for the design shown. The suitability and use of this design for any structure is the responsibility of the Building Designer per ANSI/TPI 1 Sec.2. For more information see: This job's general notes page: ITW-BCG: www.itwbcg.com; TPI: www.tpinst.org; WTCA: www.sbcindustry.com; ICC: www.iccsafe.org

WALTER P. FINN LICENSE No.22839 STATE OF FLORIDA PROFESSIONAL ENGINEER

12/19/2012

TC LL	20.0 PSF	REF	R9114- 87221
TC DL	10.0 PSF	DATE	12/19/12
BC DL	10.0 PSF	DRW	HCUSR9114 12354097
BC LL	0.0 PSF	HC-ENG	SSB/WPF
TOT.LD.	40.0 PSF	SEQN-	285561
DUR.FAC.	1.25	FROM	SDY
SPACING	24.0"	JREF-	1US59114Z05

THIS DWG PREPARED FROM COMPUTER INPUT (LOADS & DIMENSIONS) SUBMITTED BY TRUSS MFR.

(120912--Anderson Truss Co. -Patel Residence -- Lot 1 Hills Of Windsor , ** - PB15)

Top chord 2x4 SP_#2__12A
Bot chord 2x4 SP_#2__12A
Webs 2x4 SP_#2__12A

Lumber grades designated with "12A" use design values approved 1/5/2012 by ALSC.

Wind loads and reactions based on MWFRS with additional C&C member design.

In lieu of rigid ceiling use purlins to brace BC @ 24" OC.

MWFRS loads based on trusses located at least 19.12 ft. from roof edge.

Refer to drawing PB160100212 for piggyback detail. Top chord of supporting truss under piggyback to be braced @ 24" O.C., unless otherwise specified.

Special loads
------(Lumber Dur.Fac.=1.25 / Plate Dur.Fac.=1.25)

TC- From	68 plf at	0.00 to	68 plf at	3.71
TC- From	64 plf at	3.71 to	64 plf at	7.87
BC- From	4 plf at	0.00 to	4 plf at	7.87

120 mph wind, 38.25 ft mean hgt, ASCE 7-10, CLOSED bldg, Located anywhere in roof, RISK CAT II, EXP B, wind TC DL=5.0 psf, wind BC DL=2.0 psf. GCpi(+/-)=0.18

Deflection meets L/360 live and L/240 total load. Creep increase factor for dead load is 1.50.

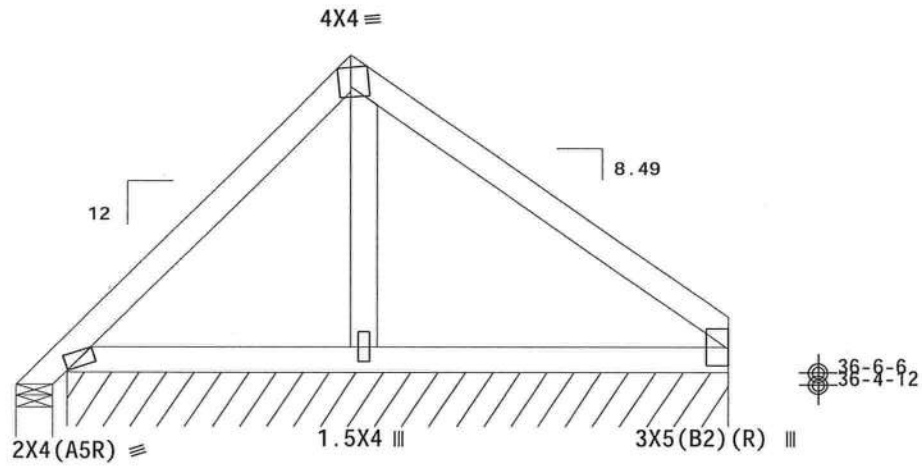

Design Crit: FBC2010Res/TPI-2007(STD)
FT/RT=20%(0%)/10(0)

PLT TYP. Wave

★10.03.10.1323.10 OTW

FL/-/5/-/-/R/-

Scale =.5"/Ft.

WALTER P. FINN LICENSE No.22839 STATE OF FLORIDA PROFESSIONAL ENGINEER

12/19/2012

ALPINE
ITW Building Components Group Inc.
Haines City, FL 33844
FL COA #0 278

WARNING READ AND FOLLOW ALL NOTES ON THIS SHEET!
IMPORTANT FURNISH THIS DESIGN TO ALL CONTRACTORS INCLUDING INSTALLERS.

Trusses require extreme care in fabricating, handling, shipping, installing and bracing. Refer to and follow the latest edition of BCSI (Building Component Safety Information, by TPI and WTCA) for general practices prior to performing these functions. Installers shall provide temporary bracing per BCSI. Unless noted otherwise, top chord shall have properly attached structural sheathing and bottom chord shall have a properly attached rigid ceiling. Locations shown for permanent lateral restraint of webs shall have bracing installed per BCSI sections B3, B7 or B10, as applicable.

ITW Building Components Group Inc. (ITWBCG) shall not be responsible for any deviation from this design, any failure to build the truss in conformance with ANSI/TPI 1, or for handling, shipping, installation & bracing of trusses. Apply plates to each face of truss and position as shown above and on the Joint Details, unless noted otherwise. Refer to drawings 160A-Z for standard plate positions. A seal on this drawing or cover page listing this drawing, indicates acceptance of professional engineering responsibility solely for the design shown. The suitability and use of this design for any structure is the responsibility of the Building Designer per ANSI/TPI 1 Sec.2. For more information see: This job's general notes page; ITW-BCG: www.itwbcg.com; TPI: www.tpinst.org; WTCA: www.sbcindustry.com; ICC: www.iccsafe.org

TC LL	20.0 PSF	REF	R9114- 87222
TC DL	10.0 PSF	DATE	12/19/12
BC DL	10.0 PSF	DRW	HCUSR9114 12354098
BC LL	0.0 PSF	HC-ENG	SSB/WPF
TOT.LD.	40.0 PSF	SEQN-	285639
DUR.FAC.	1.25	FROM	SDY
SPACING	24.0"	JREF-	1US59114Z05

THIS DWG PREPARED FROM COMPUTER INPUT (LOADS & DIMENSIONS) SUBMITTED BY TRUSS MFR.

(120912--Anderson Truss Co. -Patel Residence -- Lot 1 Hills Of Windsor , ** - PB16)

Top chord 2x4 SP_#2__12A
Bot chord 2x4 SP_#2__12A
Webs 2x4 SP_#2__12A

Lumber grades designated with "12A" use design values approved 1/5/2012 by ALSC.

Wind loads and reactions based on MWFRS with additional C&C member design.

In lieu of rigid ceiling use purlins to brace BC @ 24" OC.

Deflection meets L/360 live and L/240 total load. Creep increase factor for dead load is 1.50.

Refer to drawing PB160100212 for piggyback detail. Top chord of supporting truss under piggyback to be braced @ 24" O.C., unless otherwise specified.

Special loads
------(Lumber Dur.Fac.=1.25 / Plate Dur.Fac.=1.25)

TC- From	68 plf at	0.00 to	68 plf at	4.95
TC- From	68 plf at	4.95 to	68 plf at	7.87
BC- From	4 plf at	0.00 to	4 plf at	7.87

120 mph wind, 38.87 ft mean hgt, ASCE 7-10, CLOSED bldg, Located anywhere in roof, RISK CAT II, EXP B, wind TC DL=5.0 psf, wind BC DL=2.0 psf. GCpi(+/-)=0.18

Right end vertical not exposed to wind pressure.

MWFRS loads based on trusses located at least 19.44 ft. from roof edge.

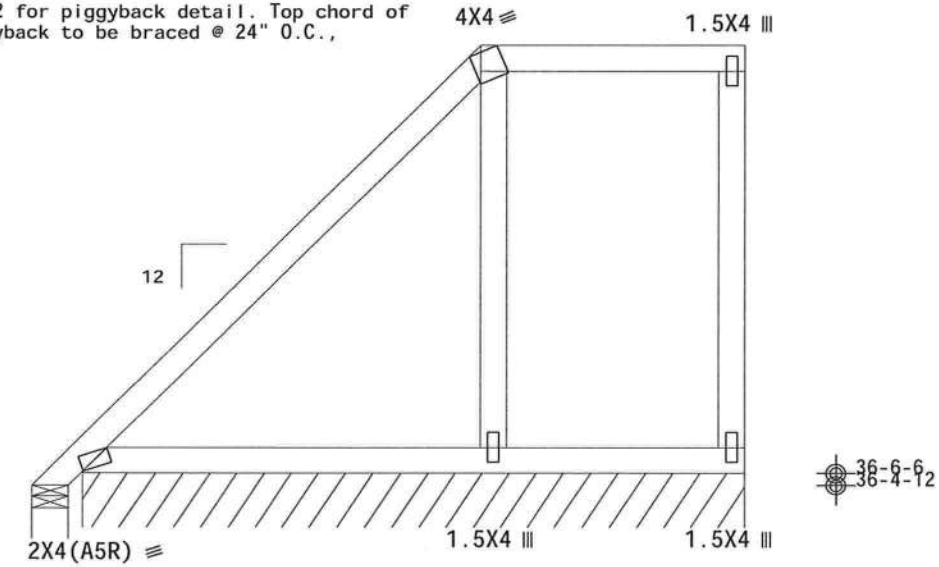

Design Crit: FBC2010Res/TPI-2007(STD)
FT/RT=20%(0%)/10(0) ★0.03.10.1★23.10 DT★: FL/-/5/-/-/R/-

PLT TYP. Wave

Scale =.5"/Ft.

WALTER P. FINN LICENSE No.22839 STATE OF FLORIDA PROFESSIONAL ENGINEER

12/19/2012

ALPINE
ITW Building Components Group Inc.
Haines City, FL 33844
FL COA #0 278

WARNING READ AND FOLLOW ALL NOTES ON THIS SHEET!
IMPORTANT FURNISH THIS DESIGN TO ALL CONTRACTORS INCLUDING INSTALLERS.

Trusses require extreme care in fabricating, handling, shipping, installing and bracing. Re[illegible] follow the latest edition of BCSI (Building Component Safety Information, by TPI and WTCA) for [illegible] practices prior to performing these functions. Installers shall provide temporary bracing per B[illegible] Unless noted otherwise, top chord shall have properly attached structural sheathing and bottom ch[illegible] shall have a properly attached rigid ceiling. Locations shown for permanent lateral restraint of [illegible] shall have bracing installed per BCSI sections B3, B7 or B10, as applicable.

ITW Building Components Group Inc. (ITWBCG) shall not be responsible for any deviation from this desi[illegible] any failure to build the truss in conformance with ANSI/TPI 1, or for handling, shipping, installation & bracing of trusses. Apply plates to each face of truss and position as shown above and on the Joint Details, unless noted otherwise. Refer to drawings 160A-Z for standard plate positions. A seal on this drawing or cover page listing this drawing, indicates acceptance of professional engineering responsibility solely for the design shown. The suitability and use of this design for any structure is the responsibility of the Building Designer per ANSI/TPI 1 Sec.2. For more information see: This job's general notes page; ITW-BCG: www.itwbcg.com; TPI: www.tpinst.org; WTCA: www.sbcindustry.com; ICC: www.iccsafe.org

TC LL	20.0 PSF	REF	R9114- 87223
TC DL	10.0 PSF	DATE	12/19/12
BC DL	10.0 PSF	DRW	HCUSR9114 12354099
BC LL	0.0 PSF	HC-ENG	SSB/WPF
TOT.LD.	40.0 PSF	SEQN-	285562
DUR.FAC.	1.25	FROM	SDY
SPACING	24.0"	JREF-	1US59114Z05

(120912--Anderson Truss Co. -Patel Residence -- Lot 1 Hills Of Windsor , ** - PB17)

Top chord 2x4 SP_#2__12A
Bot chord 2x4 SP_#2__12A
Webs 2x4 SP_#2__12A

Lumber grades designated with "12A" use design values approved 1/5/2012 by ALSC.

120 mph wind, 39.87 ft mean hgt, ASCE 7-10, CLOSED bldg, Located anywhere in roof, RISK CAT II, EXP B, wind TC DL=5.0 psf, wind BC DL=2.0 psf. GCpi(+/-)=0.18

Wind loads and reactions based on MWFRS with additional C&C member design.

MWFRS loads based on trusses located at least 19.94 ft. from roof edge.

Refer to drawing PB160100212 for piggyback detail. Top chord of supporting truss under piggyback to be braced @ 24" O.C., unless otherwise specified.

Special loads
------(Lumber Dur.Fac.=1.25 / Plate Dur.Fac.=1.25)

TC- From	68 plf at	0.00 to	68 plf at	6.95
TC- From	68 plf at	6.95 to	68 plf at	7.87
BC- From	4 plf at	0.00 to	4 plf at	7.87

Negative reaction(s) of -378# MAX. (See below) from a non-wind load case requires uplift connection.

Right end vertical not exposed to wind pressure.

In lieu of rigid ceiling use purlins to brace BC @ 24" OC.

Deflection meets L/360 live and L/240 total load. Creep increase factor for dead load is 1.50.

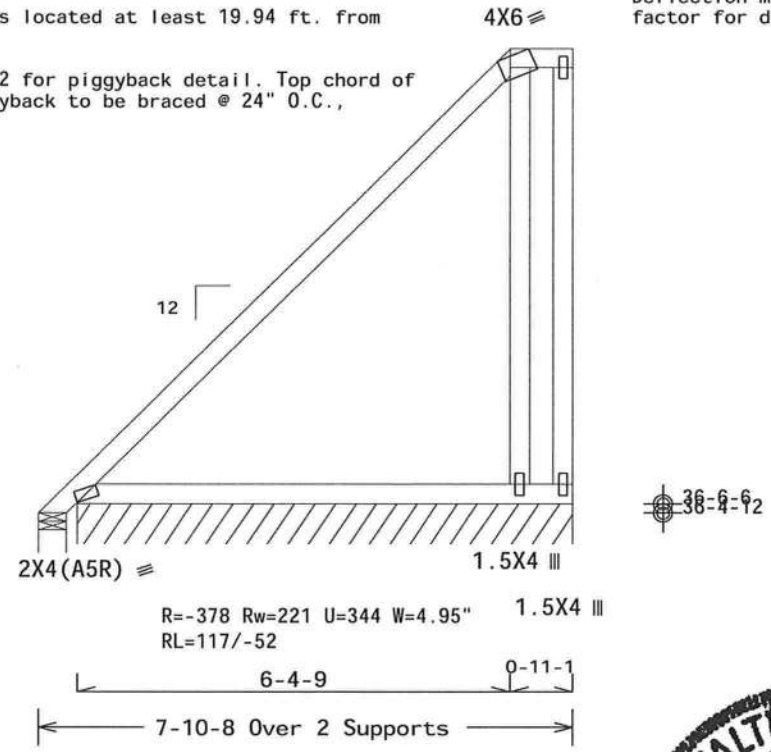

36-6-6
36-4-12

R=128 PLF U=35 PLF W=7-3-10

Design Crit: FBC2010Res/TPI-2007(STD)
FT/RT=20%(0%)/10(0) 10.03.10 1223.10 QTY 1

PLT TYP. Wave

FL/-/5/-/-/R/- Scale =.375"/Ft.

TC LL	20.0 PSF	REF R9114- 87224
TC DL	10.0 PSF	DATE 12/19/12
BC DL	10.0 PSF	DRW HCUSR9114 12354100
BC LL	0.0 PSF	HC-ENG SSB/WPF
TOT.LD.	40.0 PSF	SEQN- 285563
DUR.FAC.	1.25	FROM SDY
SPACING	24.0"	JREF- 1US59114Z05

ALPINE
ITW Building Components Group Inc.
Haines City, FL 33844
FL COA #0 278

WARNING READ AND FOLLOW ALL NOTES ON THIS SHEET!
IMPORTANT FURNISH THIS DESIGN TO ALL CONTRACTORS INCLUDING INSTALLERS.

Trusses require extreme care in fabricating, handling, shipping, installing and bracing. Refer to and follow the latest edition of BCSI (Building Component Safety Information, by TPI and WTCA) for safety practices prior to performing these functions. Installers shall provide temporary bracing per BCSI. Unless noted otherwise, top chord shall have properly attached structural sheathing and bottom chord shall have a properly attached rigid ceiling. Locations shown for permanent lateral restraint of webs shall have bracing installed per BCSI sections B3, B7 or B10, as applicable.

ITW Building Components Group Inc. (ITWBCG) shall not be responsible for any deviation from this design, any failure to build the truss in conformance with ANSI/TPI 1, or for handling, shipping, installation and bracing of trusses. Apply plates to each face of truss and position as shown above and on the Joint Details, unless noted otherwise. Refer to drawings 160A-Z for standard plate positions. A seal on this drawing or cover page listing this drawing, indicates acceptance of professional engineering responsibility solely for the design shown. The suitability and use of this design for any structure is the responsibility of the Building Designer per ANSI/TPI 1 Sec.2. For more information see: This job's general notes page; ITW-BCG: www.itwbcg.com; TPI: www.tpinst.org; WTCA: www.sbcindustry.com; ICC: www.iccsafe.org

WALTER P. FINN
LICENSE
No. 22839
STATE OF FLORIDA
PROFESSIONAL ENGINEER

12/19/2012

THIS DWG PREPARED FROM COMPUTER INPUT (LOADS & DIMENSIONS) SUBMITTED BY TRUSS MFR.

(120912--Anderson Truss Co. -Patel Residence -- Lot 1 Hills Of Windsor , ** - PB18)

Top chord 2x4 SP_#2__12A
Bot chord 2x4 SP_#2__12A
Webs 2x4 SP_#2__12A

Lumber grades designated with "12A" use design values approved 1/5/2012 by ALSC.

In lieu of rigid ceiling use purlins to brace BC @ 24" OC.

Truss passed check for 20 psf additional bottom chord live load in areas with 42"-high x 24"-wide clearance.

MWFRS loads based on trusses located at least 20.17 ft. from roof edge.

Refer to drawing PB160100212 for piggyback detail. Top chord of supporting truss under piggyback to be braced @ 24" O.C., unless otherwise specified.

120 mph wind, 40.33 ft mean hgt, ASCE 7-10, CLOSED bldg, Located anywhere in roof, RISK CAT II, EXP B, wind TC DL=5.0 psf, wind BC DL=2.0 psf. GCpi(+/-)=0.18

Wind loads and reactions based on MWFRS with additional C&C member design.

Right end vertical not exposed to wind pressure.

Deflection meets L/360 live and L/240 total load. Creep increase factor for dead load is 1.50.

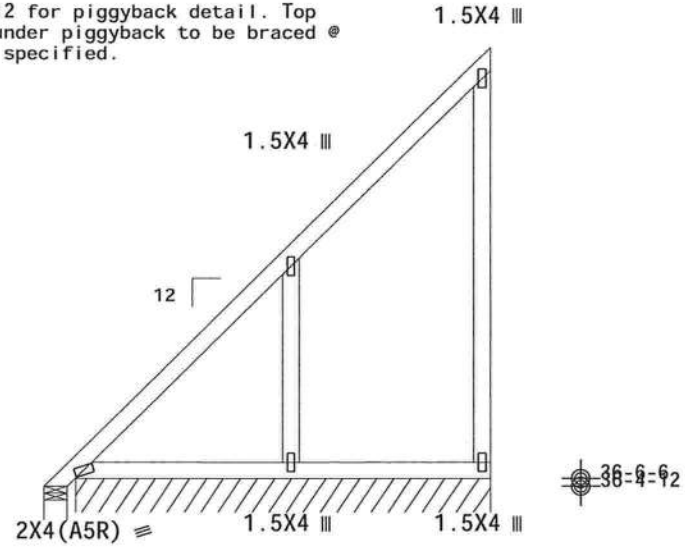

R=100 PLF U=24 PLF W=7-3-10

7-10-8 Over 2 Supports

R=3 Rw=142 U=99 W=4.95"
RL=133/-58

Design Crit: FBC2010Res/TPI-2007(STD)
FT/RT=20%(0%)/10(0)

PLT TYP. Wave

10.03.10 1223.10 QTY 8

FL/-/5/-/-/R/-

Scale =.3125"/Ft.

WALTER P. FINN LICENSE No. 22839 STATE OF FLORIDA PROFESSIONAL ENGINEER

12/19/2012

ALPINE
ITW Building Components Group Inc.
Haines City, FL 33844
FL COA #0 278

WARNING READ AND FOLLOW ALL NOTES ON THIS SHEET!
IMPORTANT FURNISH THIS DESIGN TO ALL CONTRACTORS INCLUDING INSTALLERS.

Trusses require extreme care in fabricating, handling, shipping, installing and bracing. Refer to and follow the latest edition of BCSI (Building Component Safety Information, by TPI and WTCA) for safety practices prior to performing these functions. Installers shall provide temporary bracing per BCSI. Unless noted otherwise, top chord shall have properly attached structural sheathing and bottom chord shall have a properly attached rigid ceiling. Locations shown for permanent lateral restraint of webs shall have bracing installed per BCSI sections B3, B7 or B10, as applicable.

ITW Building Components Group Inc. (ITWBCG) shall not be responsible for any deviation from this design, any failure to build the truss in conformance with ANSI/TPI 1, or for handling, shipping, installation and bracing of trusses. Apply plates to each face of truss and position as shown above and on the Joint Details, unless noted otherwise. Refer to drawings 160A-Z for standard plate positions. A seal on this drawing or cover page listing this drawing, indicates acceptance of professional engineering responsibility solely for the design shown. The suitability and use of this design for any structure is the responsibility of the Building Designer per ANSI/TPI 1 Sec.2. For more information see: This job's general notes page; ITW-BCG: www.itwbcg.com; TPI: www.tpinst.org; WTCA: www.sbcindustry.com; ICC: www.iccsafe.org

TC LL	20.0 PSF	REF	R9114- 87225
TC DL	10.0 PSF	DATE	12/19/12
BC DL	10.0 PSF	DRW	HCUSR9114 12354239
BC LL	0.0 PSF	HC-ENG	SSB/WPF
TOT.LD.	40.0 PSF	SEQN-	285564
DUR.FAC.	1.25	FROM	SDY
SPACING	24.0"	JREF-	1US59114Z05

THIS DWG PREPARED FROM COMPUTER INPUT (LOADS & DIMENSIONS) SUBMITTED BY TRUSS MFR.

(120912--Anderson Truss Co. -Patel Residence -- Lot 1 Hills Of Windsor , ** - PB19)

Top chord 2x4 SP_#2__12A
Bot chord 2x4 SP_#2__12A
Webs 2x4 SP_#2__12A

Lumber grades designated with "12A" use design values approved 1/5/2012 by ALSC.

Wind loads and reactions based on MWFRS with additional C&C member design.

In lieu of rigid ceiling use purlins to brace BC @ 24" OC.

MWFRS loads based on trusses located at least 19.20 ft. from roof edge.

Refer to drawing PB160100212 for piggyback detail. Top chord of supporting truss under piggyback to be braced @ 24" O.C., unless otherwise specified.

Special loads
------(Lumber Dur.Fac.=1.25 / Plate Dur.Fac.=1.25)

TC- From	68 plf at	0.00 to	68 plf at	2.00
TC- From	68 plf at	2.00 to	68 plf at	6.62
BC- From	4 plf at	0.00 to	4 plf at	6.62

120 mph wind, 38.40 ft mean hgt, ASCE 7-10, CLOSED bldg, Located anywhere in roof, RISK CAT II, EXP B, wind TC DL=5.0 psf, wind BC DL=2.0 psf. GCpi(+/-)=0.18

Deflection meets L/360 live and L/240 total load. Creep increase factor for dead load is 1.50.

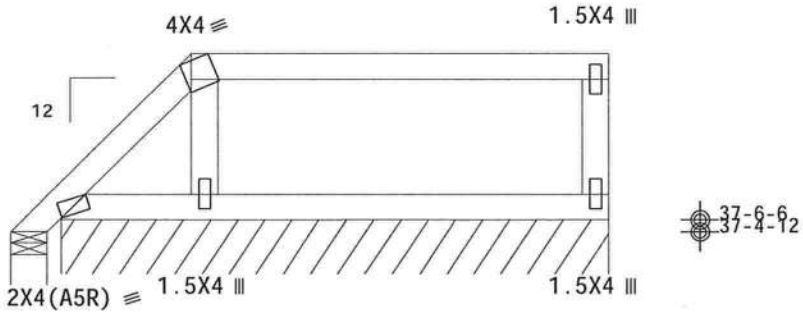

R=70 PLF U=20 PLF W=6-0-10

1-5-3 | 4-7-7

6-7-7 Over 2 Supports

R=39 Rw=41 U=19 W=4.95"
RL=33

Design Crit: FBC2010Res/TPI-2007(STD)
FT/RT=20%(0%)/10(0) 10.03.10.1223.10 STD

PLT TYP. Wave

FL/-/5/-/-/R/- Scale =.5"/Ft.

TC LL	20.0 PSF	REF	R9114- 87226
TC DL	10.0 PSF	DATE	12/19/12
BC DL	10.0 PSF	DRW	HCUSR9114 12354149
BC LL	0.0 PSF	HC-ENG	SSB/WPF
TOT.LD.	40.0 PSF	SEQN-	285565
DUR.FAC.	1.25	FROM	SDY
SPACING	24.0"	JREF-	1US59114Z05

ALPINE
ITW Building Components Group Inc.
Haines City, FL 33844
FL COA #0 278

WARNING READ AND FOLLOW ALL NOTES ON THIS SHEET!
IMPORTANT FURNISH THIS DESIGN TO ALL CONTRACTORS INCLUDING INSTALLERS.

Trusses require extreme care in fabricating, handling, shipping, installing and bracing. Refer to and follow the latest edition of BCSI (Building Component Safety Information, by TPI and WTCA) for general practices prior to performing these functions. Installers shall provide temporary bracing per BCSI. Unless noted otherwise, top chord shall have properly attached structural sheathing and bottom chord shall have a properly attached rigid ceiling. Locations shown for permanent lateral restraint of webs shall have bracing installed per BCSI sections B3, B7 or B10, as applicable.

ITW Building Components Group Inc. (ITWBCG) shall not be responsible for any deviation from this design, any failure to build the truss in conformance with ANSI/TPI 1, or for handling, shipping, installation and bracing of trusses. Apply plates to each face of truss and position as shown above and on the Joint Details, unless noted otherwise. Refer to drawings 160A-Z for standard plate positions. A seal on this drawing or cover page listing this drawing, indicates acceptance of professional engineering responsibility solely for the design shown. The suitability and use of this design for any structure is the responsibility of the Building Designer per ANSI/TPI 1 Sec.2. For more information see: This job's general notes page; ITW-BCG: www.itwbcg.com; TPI: www.tpinst.org; WTCA: www.sbcindustry.com; ICC: www.iccsafe.org

WALTER P. FINN
LICENSE
No.22839
STATE OF FLORIDA
PROFESSIONAL ENGINEER
12/19/2012

THIS DWG PREPARED FROM COMPUTER INPUT (LOADS & DIMENSIONS) SUBMITTED BY TRUSS MFR.

(120912--Anderson Truss Co. -Patel Residence -- Lot 1 Hills Of Windsor , ** - PB20)

Top chord 2x4 SP_#2__12A
Bot chord 2x4 SP_#2__12A
Webs 2x4 SP_#2__12A

Lumber grades designated with "12A" use design values approved 1/5/2012 by ALSC.

Wind loads and reactions based on MWFRS with additional C&C member design.

In lieu of rigid ceiling use purlins to brace BC @ 24" OC.

Deflection meets L/360 live and L/240 total load. Creep increase factor for dead load is 1.50.

Refer to drawing PB160100212 for piggyback detail. Top chord of supporting truss under piggyback to be braced @ 24" O.C., unless otherwise specified.

Special loads
------(Lumber Dur.Fac.=1.25 / Plate Dur.Fac.=1.25)
TC- From 68 plf at 0.00 to 68 plf at 4.00
TC- From 68 plf at 4.00 to 68 plf at 6.62
BC- From 4 plf at 0.00 to 4 plf at 6.62

120 mph wind, 39.40 ft mean hgt, ASCE 7-10, CLOSED bldg, Located anywhere in roof, RISK CAT II, EXP B, wind TC DL=5.0 psf, wind BC DL=2.0 psf. GCpi(+/-)=0.18

Right end vertical not exposed to wind pressure.

MWFRS loads based on trusses located at least 19.70 ft. from roof edge.

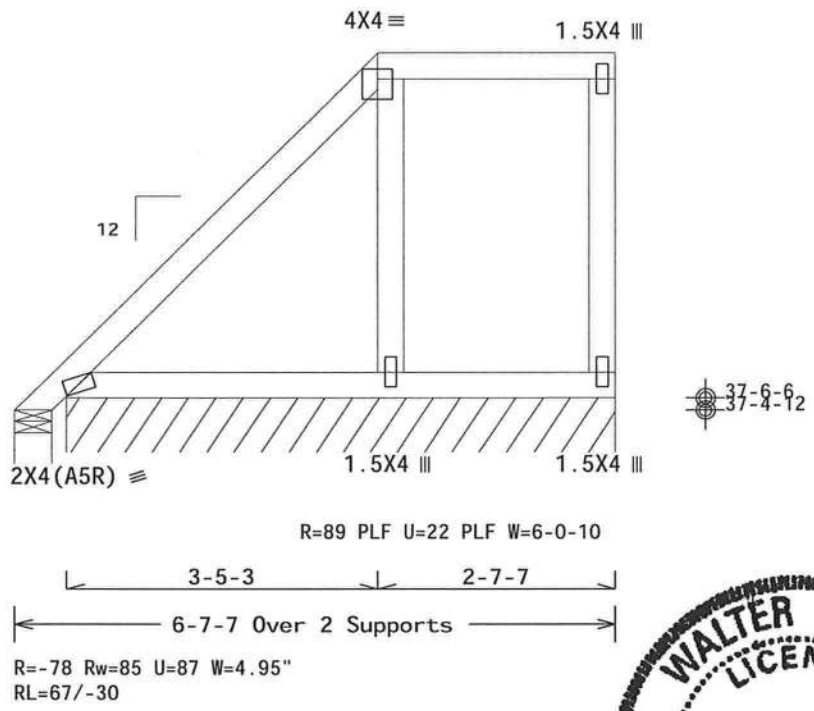

Design Crit: FBC2010Res/TPI-2007(STD)
FT/RT=20%(0%)/10(0) ★10.03.10.1423.10 DT★:

PLT TYP. Wave

FL/-/5/-/-/R/- Scale =.5"/Ft.

WALTER P. FINN LICENSE No.22839 STATE OF FLORIDA PROFESSIONAL ENGINEER
12/19/2012

ALPINE
ITW Building Components Group Inc.
Haines City, FL 33844
FL COA #0 278

WARNING READ AND FOLLOW ALL NOTES ON THIS SHEET!
IMPORTANT FURNISH THIS DESIGN TO ALL CONTRACTORS INCLUDING INSTALLERS.

Trusses require extreme care in fabricating, handling, shipping, installing and bracing. Refer to and follow the latest edition of BCSI (Building Component Safety Information, by TPI and WTCA) for general guidelines practices prior to performing these functions. Installers shall provide temporary bracing per BCSI. Unless noted otherwise, top chord shall have properly attached structural sheathing and bottom chord shall have a properly attached rigid ceiling. Locations shown for permanent lateral restraint of webs shall have bracing installed per BCSI sections B3, B7 or B10, as applicable.

ITW Building Components Group Inc. (ITWBCG) shall not be responsible for any deviation from this design, any failure to build the truss in conformance with ANSI/TPI 1, or for handling, shipping, installation & bracing of trusses. Apply plates to each face of truss and position as shown above and on the Joint Details, unless noted otherwise. Refer to drawings 160A-Z for standard plate positions. A seal on this drawing or cover page listing this drawing, indicates acceptance of professional engineering responsibility solely for the design shown. The suitability and use of this design for any structure is the responsibility of the Building Designer per ANSI/TPI 1 Sec.2. For more information see: This job's general notes page; ITW-BCG: www.itwbcg.com; TPI: www.tpinst.org; WTCA: www.sbcindustry.com; ICC: www.iccsafe.org

TC LL	20.0 PSF	REF	R9114- 87227
TC DL	10.0 PSF	DATE	12/19/12
BC DL	10.0 PSF	DRW	HCUSR9114 12354150
BC LL	0.0 PSF	HC-ENG	SSB/WPF
TOT.LD.	40.0 PSF	SEQN-	285566
DUR.FAC.	1.25	FROM	SDY
SPACING	24.0"	JREF-	1US59114Z05

THIS DWG PREPARED FROM COMPUTER INPUT (LOADS & DIMENSIONS) SUBMITTED BY TRUSS MFR.

(120912--Anderson Truss Co. -Patel Residence -- Lot 1 Hills Of Windsor , ** - PB21)

Top chord 2x4 SP_#2__12A :T2 2x6 SP_#1_Dense_12A:
Bot chord 2x4 SP_#2__12A
Webs 2x4 SP_#2__12A

Lumber grades designated with "12A" use design values approved 1/5/2012 by ALSC.

120 mph wind, 40.40 ft mean hgt, ASCE 7-10, CLOSED bldg, Located anywhere in roof, RISK CAT II, EXP B, wind TC DL=5.0 psf, wind BC DL=2.0 psf. GCpi(+/-)=0.18

Wind loads and reactions based on MWFRS with additional C&C member design.

MWFRS loads based on trusses located at least 20.20 ft. from roof edge.

Refer to drawing PB160100212 for piggyback detail. Top chord of supporting truss under piggyback to be braced @ 24" O.C., unless otherwise specified.

Special loads
------(Lumber Dur.Fac.=1.25 / Plate Dur.Fac.=1.25)

TC- From	68 plf at	0.00 to	68 plf at	6.00
TC- From	68 plf at	6.00 to	68 plf at	6.62
BC- From	4 plf at	0.00 to	4 plf at	6.62

Negative reaction(s) of -247# MAX. (See below) from a non-wind load case requires uplift connection.

Right end vertical not exposed to wind pressure.

In lieu of rigid ceiling use purlins to brace BC @ 24" OC.

Deflection meets L/360 live and L/240 total load. Creep increase factor for dead load is 1.50.

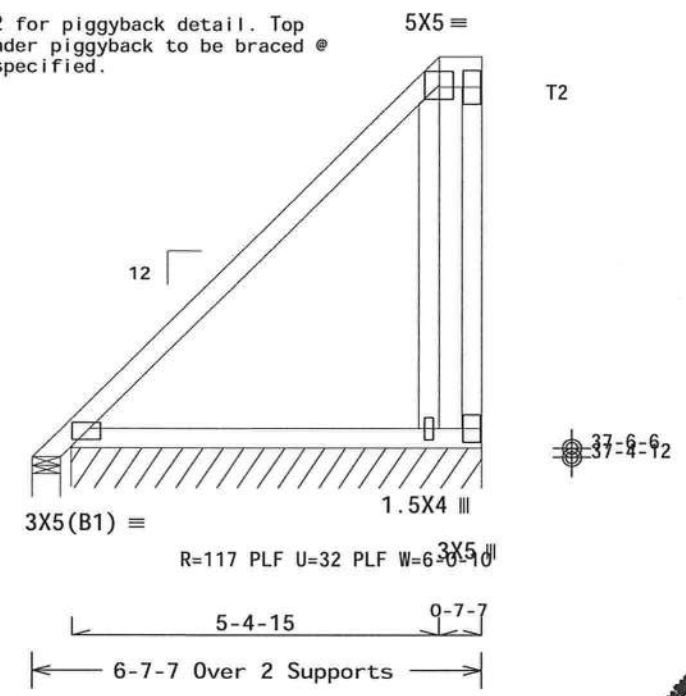

Design Crit: FBC2010Res/TPI-2007(STD)
FT/RT=20%(0%)/10(0)

PLT TYP. Wave

★0.03.10.12.23.10 QTY: FL/-/5/-/-/R/- Scale =.375"/Ft.

WALTER P. FINN LICENSE No.22839 STATE OF FLORIDA PROFESSIONAL ENGINEER
12/19/2012

ALPINE
ITW Building Components Group Inc.
Haines City, FL 33844
FL COA #0 278

WARNING READ AND FOLLOW ALL NOTES ON THIS SHEET!
IMPORTANT FURNISH THIS DESIGN TO ALL CONTRACTORS INCLUDING INSTALLERS.

Trusses require extreme care in fabricating, handling, shipping, installing and bracing. Refer to and follow the latest edition of BCSI (Building Component Safety Information, by TPI and WTCA) for standard practices prior to performing these functions. Installers shall provide temporary bracing per BCSI. Unless noted otherwise, top chord shall have properly attached structural sheathing and bottom chord shall have a properly attached rigid ceiling. Locations shown for permanent lateral restraint of webs shall have bracing installed per BCSI sections B3, B7 or B10, as applicable.

ITW Building Components Group Inc. (ITWBCG) shall not be responsible for any deviation from this design, any failure to build the truss in conformance with ANSI/TPI 1, or for handling, shipping, installation & bracing of trusses. Apply plates to each face of truss and position as shown above and on the Joint Details, unless noted otherwise. Refer to drawings 160A-Z for standard plate positions. A seal on this drawing or cover page listing this drawing, indicates acceptance of professional engineering responsibility solely for the design shown. The suitability and use of this design for any structure is the responsibility of the Building Designer per ANSI/TPI 1 Sec.2. For more information see: This job's general notes page; ITW-BCG: www.itwbcg.com; TPI: www.tpinst.org; WTCA: www.sbcindustry.com; ICC: www.iccsafe.org

TC LL	20.0 PSF	REF R9114- 87228
TC DL	10.0 PSF	DATE 12/19/12
BC DL	10.0 PSF	DRW HCUSR9114 12354151
BC LL	0.0 PSF	HC-ENG SSB/WPF
TOT.LD.	40.0 PSF	SEQN- 285567
DUR.FAC.	1.25	FROM SDY
SPACING	24.0"	JREF- 1US59114Z05

(120912--Anderson Truss Co. -Patel Residence -- Lot 1 Hills Of Windsor , ** - PB22)

Top chord 2x4 SP_#2__12A
Bot chord 2x4 SP_#2__12A
Webs 2x4 SP_#2__12A

Lumber grades designated with "12A" use design values approved 1/5/2012 by ALSC.

120 mph wind, 40.71 ft mean hgt, ASCE 7-10, CLOSED bldg, Located anywhere in roof, RISK CAT II, EXP B, wind TC DL=5.0 psf, wind BC DL=2.0 psf. GCpi(+/-)=0.18

Wind loads and reactions based on MWFRS with additional C&C member design.

MWFRS loads based on trusses located at least 20.35 ft. from roof edge.

Refer to drawing PB160100212 for piggyback detail. Top chord of supporting truss under piggyback to be braced @ 24" O.C., unless otherwise specified.

Special loads
------(Lumber Dur.Fac.=1.25 / Plate Dur.Fac.=1.25)
TC- From 68 plf at 0.00 to 68 plf at 6.62
BC- From 4 plf at 0.00 to 4 plf at 6.62

Negative reaction(s) of -446# MAX. (See below) from a non-wind load case requires uplift connection.

Right end vertical not exposed to wind pressure.

In lieu of rigid ceiling use purlins to brace BC @ 24" OC.

Deflection meets L/360 live and L/240 total load. Creep increase factor for dead load is 1.50.

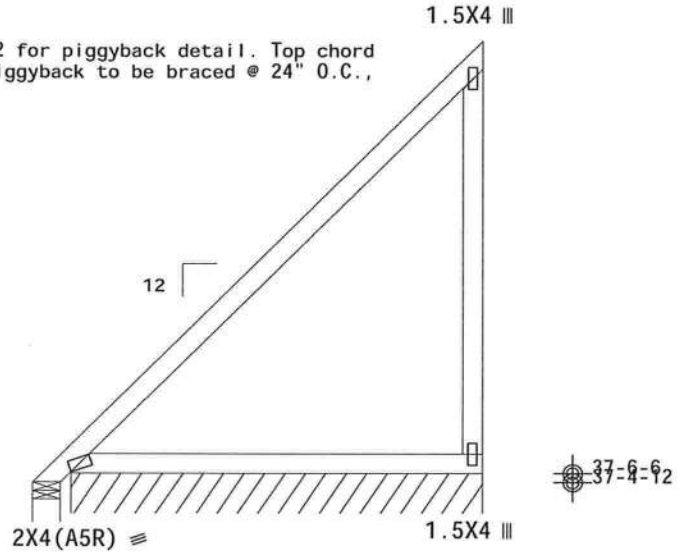

R=150 PLF U=43 PLF W=6-0-10

6-7-7 Over 2 Supports

R=-446 Rw=237 U=402 W=4.95"
RL=112/-49

Design Crit: FBC2010Res/TPI-2007(STD)
FT/RT=20%(0%)/10(0) 10.03.10.1 23.10 DOL:1.38 FL/-/5/-/-/R/-

PLT TYP. Wave

Scale =.375"/Ft.

WALTER P. FINN LICENSE No.22839 STATE OF FLORIDA PROFESSIONAL ENGINEER

12/19/2012

ALPINE
ITW Building Components Group Inc.
Haines City, FL 33844
FL COA #0 278

WARNING READ AND FOLLOW ALL NOTES ON THIS SHEET!
IMPORTANT FURNISH THIS DESIGN TO ALL CONTRACTORS INCLUDING INSTALLERS.

Trusses require extreme care in fabricating, handling, shipping, installing and bracing. Refer to and follow the latest edition of BCSI (Building Component Safety Information, by TPI and WTCA) for general practices prior to performing these functions. Installers shall provide temporary bracing per BCSI. Unless noted otherwise, top chord shall have properly attached structural sheathing and bottom chord shall have a properly attached rigid ceiling. Locations shown for permanent lateral restraint of webs shall have bracing installed per BCSI sections B3, B7 or B10, as applicable.

ITW Building Components Group Inc. (ITWBCG) shall not be responsible for any deviation from this design, any failure to build the truss in conformance with ANSI/TPI 1, or for handling, shipping, installation & bracing of trusses. Apply plates to each face of truss and position as shown above and on the Joint Details, unless noted otherwise. Refer to drawings 160A-Z for standard plate positions. A seal on this drawing or cover page listing this drawing, indicates acceptance of professional engineering responsibility solely for the design shown. The suitability and use of this design for any structure is the responsibility of the Building Designer per ANSI/TPI 1 Sec.2. For more information see: This job's general notes page; ITW-BCG: www.itwbcg.com; TPI: www.tpinst.org; WTCA: www.sbcindustry.com; ICC: www.iccsafe.org

TC LL	20.0 PSF	REF	R9114- 87229
TC DL	10.0 PSF	DATE	12/19/12
BC DL	10.0 PSF	DRW	HCUSR9114 12354152
BC LL	0.0 PSF	HC-ENG	SSB/WPF
TOT.LD.	40.0 PSF	SEQN-	285568
DUR.FAC.	1.25	FROM	SDY
SPACING	24.0"	JREF-	1US59114Z05

THIS DWG PREPARED FROM COMPUTER INPUT (LOADS & DIMENSIONS) SUBMITTED BY TRUSS MFR.

(120912--Anderson Truss Co. -Patel Residence -- Lot 1 Hills Of Windsor , ** - PB23)

Top chord 2x4 SP_#2__12A
Bot chord 2x4 SP_#2__12A
Webs 2x4 SP_#2__12A

Lumber grades designated with "12A" use design values approved 1/5/2012 by ALSC.

Wind loads and reactions based on MWFRS with additional C&C member design.

In lieu of rigid ceiling use purlins to brace BC @ 24" OC.

MWFRS loads based on trusses located at least 19.89 ft. from roof edge.

Refer to drawing PB160100212 for piggyback detail. Top chord of supporting truss under piggyback to be braced @ 24" O.C., unless otherwise specified.

Special loads
------(Lumber Dur.Fac.=1.25 / Plate Dur.Fac.=1.25)
TC- From 68 plf at 0.00 to 68 plf at 4.76
BC- From 4 plf at 0.00 to 4 plf at 4.76

120 mph wind, 39.78 ft mean hgt, ASCE 7-10, CLOSED bldg, Located anywhere in roof, RISK CAT II, EXP B, wind TC DL=5.0 psf, wind BC DL=2.0 psf. GCpi(+/-)=0.18

Right end vertical not exposed to wind pressure.

Deflection meets L/360 live and L/240 total load. Creep increase factor for dead load is 1.50.

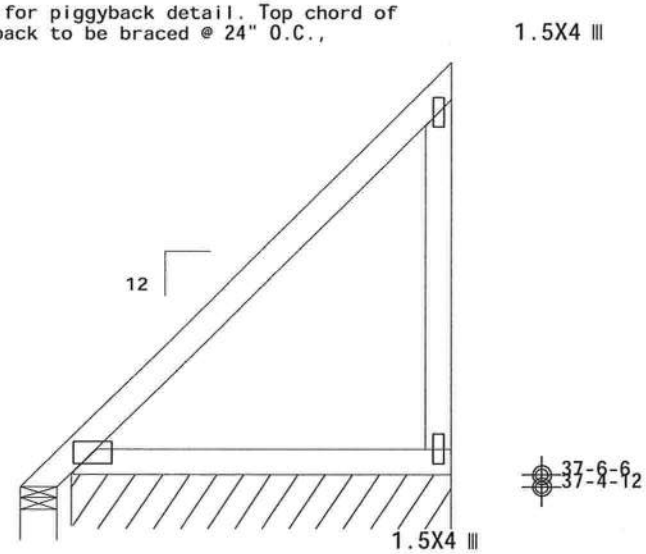

3X5(B1) R=120 PLF U=34 PLF W=4-2-6

4-9-3 Over 2 Supports

R=-175 Rw=125 U=163 W=4.95"
RL=80/-36

Design Crit: FBC2010Res/TPI-2007(STD)
FT/RT=20%(0%)/10(0) ★0.03.10.1★23.10 DT★:

PLT TYP. Wave

FL/-/5/-/-/R/- Scale =.5"/Ft.

TC LL	20.0 PSF	REF	R9114- 87230
TC DL	10.0 PSF	DATE	12/19/12
BC DL	10.0 PSF	DRW	HCUSR9114 12354153
BC LL	0.0 PSF	HC-ENG	SSB/WPF
TOT.LD.	40.0 PSF	SEQN-	285569
DUR.FAC.	1.25	FROM	SDY
SPACING	24.0"	JREF-	1US59114Z05

ALPINE
ITW Building Components Group Inc.
Haines City, FL 33844
FL COA #0 278

WARNING READ AND FOLLOW ALL NOTES ON THIS SHEET!
IMPORTANT FURNISH THIS DESIGN TO ALL CONTRACTORS INCLUDING INSTALLERS.

Trusses require extreme care in fabricating, handling, shipping, installing and bracing. Refer to and follow the latest edition of BCSI (Building Component Safety Information, by TPI and WTCA) for standard practices prior to performing these functions. Installers shall provide temporary bracing per BCSI. Unless noted otherwise, top chord shall have properly attached structural sheathing and bottom chord shall have a properly attached rigid ceiling. Locations shown for permanent lateral restraint of webs shall have bracing installed per BCSI sections B3, B7 or B10, as applicable.

ITW Building Components Group Inc. (ITWBCG) shall not be responsible for any deviation from this design, any failure to build the truss in conformance with ANSI/TPI 1, or for handling, shipping, installation & bracing of trusses. Apply plates to each face of truss and position as shown above and on the Joint Details, unless noted otherwise. Refer to drawings 160A-Z for standard plate positions. A seal on this drawing or cover page listing this drawing, indicates acceptance of professional engineering responsibility solely for the design shown. The suitability and use of this design for any structure is the responsibility of the Building Designer per ANSI/TPI 1 Sec.2. For more information see: This job's general notes page; ITW-BCG: www.itwbcg.com; TPI: www.tpinst.org; WTCA: www.sbcindustry.com; ICC: www.iccsafe.org

WALTER P. FINN
LICENSE
No.22839
STATE OF FLORIDA
PROFESSIONAL ENGINEER
12/19/2012

(120912--Anderson Truss Co. -Patel Residence -- Lot 1 Hills Of Windsor , ** - PB24)

THIS DWG PREPARED FROM COMPUTER INPUT (LOADS & DIMENSIONS) SUBMITTED BY TRUSS MFR.

Top chord 2x4 SP_#2__12A
Bot chord 2x4 SP_#2__12A
Webs 2x4 SP_#2__12A

Lumber grades designated with "12A" use design values approved 1/5/2012 by ALSC.

Wind loads and reactions based on MWFRS with additional C&C member design.

In lieu of rigid ceiling use purlins to brace BC @ 24" OC.

MWFRS loads based on trusses located at least 11.67 ft. from roof edge.

Refer to drawing PB160100212 for piggyback detail. Top chord of supporting truss under piggyback to be braced @ 24" O.C., unless otherwise specified.

Special loads
------(Lumber Dur.Fac.=1.25 / Plate Dur.Fac.=1.25)

TC- From	68 plf at	0.00 to	68 plf at	2.00
TC- From	68 plf at	2.00 to	68 plf at	7.78
BC- From	4 plf at	0.00 to	4 plf at	7.78

120 mph wind, 23.33 ft mean hgt, ASCE 7-10, CLOSED bldg, Located anywhere in roof, RISK CAT II, EXP B, wind TC DL=5.0 psf, wind BC DL=2.0 psf. GCpi(+/-)=0.18

Deflection meets L/360 live and L/240 total load. Creep increase factor for dead load is 1.50.

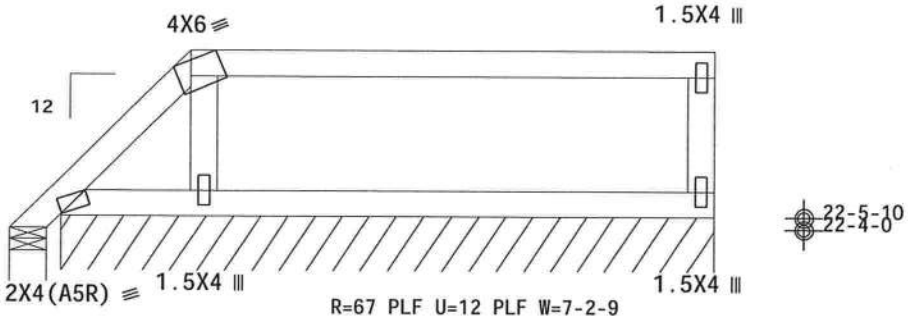

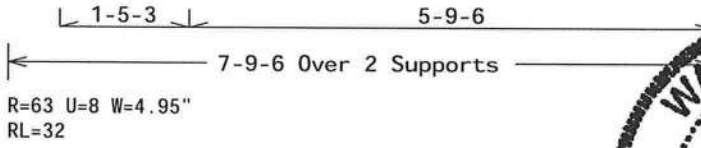

R=63 U=8 W=4.95"
RL=32

Design Crit: FBC2010Res/TPI-2007(STD)
FT/RT=20%(0%)/10(0)

PLT TYP. Wave

10.03.10.12.23.10 QTY:

FL/-/5/-/-/R/-

Scale =.5"/Ft.

WALTER P. FINN LICENSE No.22839 STATE OF FLORIDA PROFESSIONAL ENGINEER

12/19/2012

ALPINE
ITW Building Components Group Inc.
Haines City, FL 33844
FL COA #0 278

WARNING READ AND FOLLOW ALL NOTES ON THIS SHEET!
IMPORTANT FURNISH THIS DESIGN TO ALL CONTRACTORS INCLUDING INSTALLERS.

Trusses require extreme care in fabricating, handling, shipping, installing and bracing. Refer to and follow the latest edition of BCSI (Building Component Safety Information, by TPI and WTCA) for standard practices prior to performing these functions. Installers shall provide temporary bracing per BCSI. Unless noted otherwise, top chord shall have properly attached structural sheathing and bottom chord shall have a properly attached rigid ceiling. Locations shown for permanent lateral restraint of webs shall have bracing installed per BCSI sections B3, B7 or B10, as applicable.

ITW Building Components Group Inc. (ITWBCG) shall not be responsible for any deviation from this design, any failure to build the truss in conformance with ANSI/TPI 1, or for handling, shipping, installation & bracing of trusses. Apply plates to each face of truss and position as shown above and on the Joint Details, unless noted otherwise. Refer to drawings 160A-Z for standard plate positions. A seal on this drawing or cover page listing this drawing, indicates acceptance of professional engineering responsibility solely for the design shown. The suitability and use of this design for any structure is the responsibility of the Building Designer per ANSI/TPI 1 Sec.2. For more information see: This job's general notes page; ITW-BCG: www.itwbcg.com; TPI: www.tpinst.org; WTCA: www.sbcindustry.com; ICC: www.iccsafe.org

TC LL	20.0 PSF	REF	R9114- 87231
TC DL	10.0 PSF	DATE	12/19/12
BC DL	10.0 PSF	DRW	HCUSR9114 12354154
BC LL	0.0 PSF	HC-ENG	SSB/WPF
TOT.LD.	40.0 PSF	SEQN-	285570
DUR.FAC.	1.25	FROM	SDY
SPACING	24.0"	JREF-	1US59114Z05

(120912--Anderson Truss Co. -Patel Residence -- Lot 1 Hills Of Windsor , ** - PB25)

THIS DWG PREPARED FROM COMPUTER INPUT (LOADS & DIMENSIONS) SUBMITTED BY TRUSS MFR.

Top chord 2x4 SP_#2__12A
Bot chord 2x4 SP_#2__12A
Webs 2x4 SP_#2__12A

Lumber grades designated with "12A" use design values approved 1/5/2012 by ALSC.

Wind loads and reactions based on MWFRS with additional C&C member design.

In lieu of rigid ceiling use purlins to brace BC @ 24" OC.

Deflection meets L/360 live and L/240 total load. Creep increase factor for dead load is 1.50.

Refer to drawing PB160100212 for piggyback detail. Top chord of supporting truss under piggyback to be braced @ 24" O.C., unless otherwise specified.

Special loads
------(Lumber Dur.Fac.=1.25 / Plate Dur.Fac.=1.25)

TC- From	68 plf at	0.00 to	68 plf at	4.00
TC- From	68 plf at	4.00 to	68 plf at	7.78
BC- From	4 plf at	0.00 to	4 plf at	7.78

120 mph wind, 24.33 ft mean hgt, ASCE 7-10, CLOSED bldg, Located anywhere in roof, RISK CAT II, EXP B, wind TC DL=5.0 psf, wind BC DL=2.0 psf. GCpi(+/-)=0.18

Right end vertical not exposed to wind pressure.

MWFRS loads based on trusses located at least 12.17 ft. from roof edge.

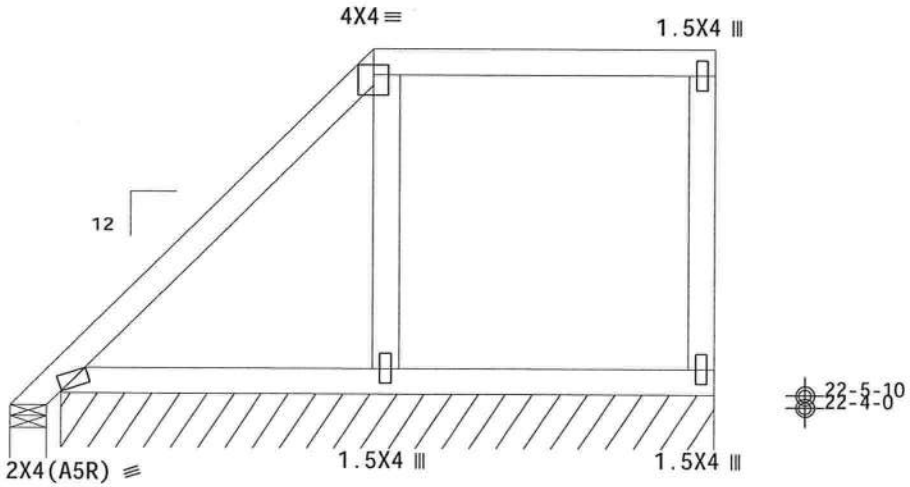

Design Crit: FBC2010Res/TPI-2007(STD)
FT/RT=20%(0%)/10(0)

PLT TYP. Wave

0.03 10.13.13.70 GT: FL/-/5/-/-/R/- Scale =.5"/Ft.

WALTER P. FINN LICENSE No.22839 STATE OF FLORIDA PROFESSIONAL ENGINEER

12/19/2012

ALPINE
ITW Building Components Group Inc.
Haines City, FL 33844
FL COA #0 278

WARNING READ AND FOLLOW ALL NOTES ON THIS SHEET!
IMPORTANT FURNISH THIS DESIGN TO ALL CONTRACTORS INCLUDING INSTALLERS.

Trusses require extreme care in fabricating, handling, shipping, installing and bracing. Refer to and follow the latest edition of BCSI (Building Component Safety Information, by TPI and WTCA) for general practices prior to performing these functions. Installers shall provide temporary bracing per BCSI. Unless noted otherwise, top chord shall have properly attached structural sheathing and bottom chord shall have a properly attached rigid ceiling. Locations shown for permanent lateral restraint of webs shall have bracing installed per BCSI sections B3, B7 or B10, as applicable.

ITW Building Components Group Inc. (ITWBCG) shall not be responsible for any deviation from this design, any failure to build the truss in conformance with ANSI/TPI 1, or for handling, shipping, installation & bracing of trusses. Apply plates to each face of truss and position as shown above and on the Joint Details, unless noted otherwise. Refer to drawings 160A-Z for standard plate positions. A seal on this drawing or cover page listing this drawing, indicates acceptance of professional engineering responsibility solely for the design shown. The suitability and use of this design for any structure is the responsibility of the Building Designer per ANSI/TPI 1 Sec.2. For more information see: This job's general notes page; ITW-BCG: www.itwbcg.com; TPI: www.tpinst.org; WTCA: www.sbcindustry.com; ICC: www.iccsafe.org

TC LL	20.0 PSF	REF	R9114- 87232
TC DL	10.0 PSF	DATE	12/19/12
BC DL	10.0 PSF	DRW	HCUSR9114 12354155
BC LL	0.0 PSF	HC-ENG	SSB/WPF
TOT.LD.	40.0 PSF	SEQN-	285571
DUR.FAC.	1.25	FROM	SDY
SPACING	24.0"	JREF-	1US59114Z05

(120912--Anderson Truss Co. -Patel Residence -- Lot 1 Hills Of Windsor , ** - PB26)

THIS DWG PREPARED FROM COMPUTER INPUT (LOADS & DIMENSIONS) SUBMITTED BY TRUSS MFR.

Top chord 2x4 SP_#2__12A
Bot chord 2x4 SP_#2__12A
Webs 2x4 SP_#2__12A

Lumber grades designated with "12A" use design values approved 1/5/2012 by ALSC.

Wind loads and reactions based on MWFRS with additional C&C member design.

In lieu of rigid ceiling use purlins to brace BC @ 24" OC.

MWFRS loads based on trusses located at least 12.10 ft. from roof edge.

Refer to drawing PB160100212 for piggyback detail. Top chord of supporting truss under piggyback to be braced @ 24" O.C., unless otherwise specified.

Special loads
------(Lumber Dur.Fac.=1.25 / Plate Dur.Fac.=1.25)
TC- From 68 plf at 0.00 to 68 plf at 3.75
BC- From 4 plf at 0.00 to 4 plf at 3.75

120 mph wind, 24.21 ft mean hgt, ASCE 7-10, CLOSED bldg, Located anywhere in roof, RISK CAT II, EXP B, wind TC DL=5.0 psf, wind BC DL=2.0 psf. GCpi(+/-)=0.18

Right end vertical not exposed to wind pressure.

Deflection meets L/360 live and L/240 total load. Creep increase factor for dead load is 1.50.

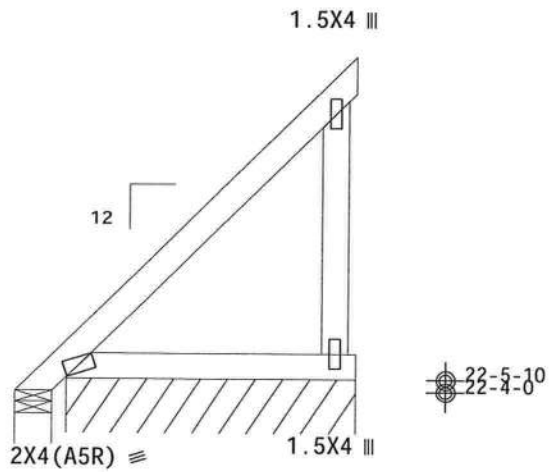

R=103 PLF U=26 PLF W=3-2-3

3-9-0 Over 2 Supports

R=-73 Rw=75 U=74 W=4.95"
RL=60/-27

Design Crit: FBC2010Res/TPI-2007(STD)
FT/RT=20%(0%)/10(0) 10.03.10.123.10 QTY 5

PLT TYP. Wave

FL/-/5/-/-/R/- Scale =.5"/Ft.

TC LL	20.0 PSF	REF	R9114- 87233
TC DL	10.0 PSF	DATE	12/19/12
BC DL	10.0 PSF	DRW	HCUSR9114 12354156
BC LL	0.0 PSF	HC-ENG	SSB/WPF
TOT.LD.	40.0 PSF	SEQN-	285572
DUR.FAC.	1.25	FROM	SDY
SPACING	24.0"	JREF-	1US59114Z05

ALPINE
ITW Building Components Group Inc.
Haines City, FL 33844
FL COA #0 278

WARNING READ AND FOLLOW ALL NOTES ON THIS SHEET!
IMPORTANT FURNISH THIS DESIGN TO ALL CONTRACTORS INCLUDING INSTALLERS.

Trusses require extreme care in fabricating, handling, shipping, installing and bracing. Refer to and follow the latest edition of BCSI (Building Component Safety Information, by TPI and WTCA) for standard practices prior to performing these functions. Installers shall provide temporary bracing per BCSI. Unless noted otherwise, top chord shall have properly attached structural sheathing and bottom chord shall have a properly attached rigid ceiling. Locations shown for permanent lateral restraint of webs shall have bracing installed per BCSI sections B3, B7 or B10, as applicable.

ITW Building Components Group Inc. (ITWBCG) shall not be responsible for any deviation from this design, any failure to build the truss in conformance with ANSI/TPI 1, or for handling, shipping, installation and bracing of trusses. Apply plates to each face of truss and position as shown above and on the Joint Details, unless noted otherwise. Refer to drawings 160A-Z for standard plate positions. A seal on this drawing or cover page listing this drawing, indicates acceptance of professional engineering responsibility solely for the design shown. The suitability and use of this design for any structure is the responsibility of the Building Designer per ANSI/TPI 1 Sec.2. For more information see: This job's general notes page; ITW-BCG: www.itwbcg.com; TPI: www.tpinst.org; WTCA: www.sbcindustry.com; ICC: www.iccsafe.org

WALTER P. FINN
LICENSE
No.22839
STATE OF
FLORIDA
PROFESSIONAL ENGINEER

12/19/2012

(120912--Anderson Truss Co. -Patel Residence -- Lot 1 Hills Of Windsor , ** - PB27 2-PLY)

THIS DWG PREPARED FROM COMPUTER INPUT (LOADS & DIMENSIONS) SUBMITTED BY TRUSS MFR.

Top chord 2x4 SP_#2__12A
Bot chord 2x4 SP_#2__12A
Webs 2x4 SP_#2__12A

Lumber grades designated with "12A" use design values approved 1/5/2012 by ALSC.

Wind loads and reactions based on MWFRS with additional C&C member design.

In lieu of rigid ceiling use purlins to brace BC @ 24" OC.

Deflection meets L/360 live and L/240 total load. Creep increase factor for dead load is 1.50.

Refer to drawing PB160100212 for piggyback detail. Top chord of supporting truss under piggyback to be braced @ 24" O.C., unless otherwise specified.

2 COMPLETE TRUSSES REQUIRED

Nail Schedule:0.128"x3", min. nails
Top Chord: 1 Row @12.00" o.c.
Bot Chord: 1 Row @12.00" o.c.
Webs : 1 Row @ 4" o.c.
Use equal spacing between rows and stagger nails in each row to avoid splitting.

120 mph wind, 24.45 ft mean hgt, ASCE 7-10, CLOSED bldg, Located anywhere in roof, RISK CAT II, EXP B, wind TC DL=5.0 psf, wind BC DL=2.0 psf. GCpi(+/-)=0.18

Trusses to be spaced at 16.0" OC maximum.

Truss must be installed as shown with top chord up.

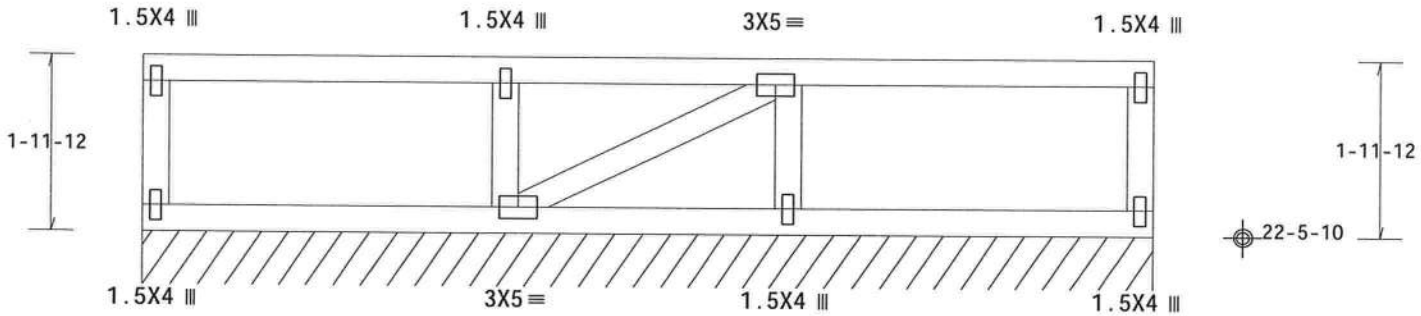

11-1-7 Over Continuous Supports

R=43 PLF U=10 PLF W=11-1-7

PLT TYP. Wave

Design Crit: FBC2010Res/TPI-2007(STD)
FT/RT=20%(0%)/10(0)

10.03.10.13.23.10

FL/-/5/-/-/R/-

Scale =.5"/Ft.

TC LL	20.0 PSF	REF	R9114- 87234
TC DL	10.0 PSF	DATE	12/19/12
BC DL	10.0 PSF	DRW	HCUSR9114 12354240
BC LL	0.0 PSF	HC-ENG	SSB/WPF
TOT.LD.	40.0 PSF	SEQN-	285640
DUR.FAC.	1.25	FROM	SDY
SPACING	16.0"	JREF-	1US59114Z05

ALPINE
ITW Building Components Group Inc.
Haines City, FL 33844
FL COA #0 278

WARNING READ AND FOLLOW ALL NOTES ON THIS SHEET!
IMPORTANT FURNISH THIS DESIGN TO ALL CONTRACTORS INCLUDING INSTALLERS.

Trusses require extreme care in fabricating, handling, shipping, installing and bracing. Re follow the latest edition of BCSI (Building Component Safety Information, by TPI and WTCA) for practices prior to performing those functions. Installers shall provide temporary bracing per Unless noted otherwise, top chord shall have properly attached structural sheathing and bottom ch shall have a properly attached rigid ceiling. Locations shown for permanent lateral restraint of shall have bracing installed per BCSI sections B3, B7 or B10, as applicable.

ITW Building Components Group Inc. (ITWBCG) shall not be responsible for any deviation from this desi any failure to build the truss in conformance with ANSI/TPI 1, or for handling, shipping, installation & bracing of trusses. Apply plates to each face of truss and position as shown above and on the Joint Details, unless noted otherwise. Refer to drawings 160A-Z for standard plate positions. A seal on this drawing or cover page listing this drawing, indicates acceptance of professional engineering responsibility solely for the design shown. The suitability and use of this design for any structure is the responsibility of the Building Designer per ANSI/TPI 1 Sec.2. For more information see: This job's general notes page; ITW-BCG: www.itwbcg.com; TPI: www.tpinst.org; WTCA: www.sbcindustry.com; ICC: www.iccsafe.org

WALTER P. FINN
LICENSE
No.22839
STATE OF FLORIDA
PROFESSIONAL ENGINEER

12/19/2012

(120912--Anderson Truss Co. -Patel Residence -- Lot 1 Hills Of Windsor , ** - PB28)

THIS DWG PREPARED FROM COMPUTER INPUT (LOADS & DIMENSIONS) SUBMITTED BY TRUSS MFR.

Top chord 2x4 SP_#2__12A
Bot chord 2x4 SP_#2__12A
Webs 2x4 SP_#2__12A

Lumber grades designated with "12A" use design values approved 1/5/2012 by ALSC.

Wind loads and reactions based on MWFRS with additional C&C member design.

Trusses to be spaced at 16.0" OC maximum.

Provide for complete drainage of roof.

Refer to drawing PB160100212 for piggyback detail. Top chord of supporting truss under piggyback to be braced @ 24" O.C., unless otherwise specified.

120 mph wind, 25.78 ft mean hgt, ASCE 7-10, CLOSED bldg, Located anywhere in roof, RISK CAT II, EXP B, wind TC DL=5.0 psf, wind BC DL=2.0 psf. GCpi(+/-)=0.18

End verticals not exposed to wind pressure.

In lieu of rigid ceiling use purlins to brace BC @ 24" OC.

Deflection meets L/360 live and L/240 total load. Creep increase factor for dead load is 1.50.

Truss must be installed as shown with top chord up.

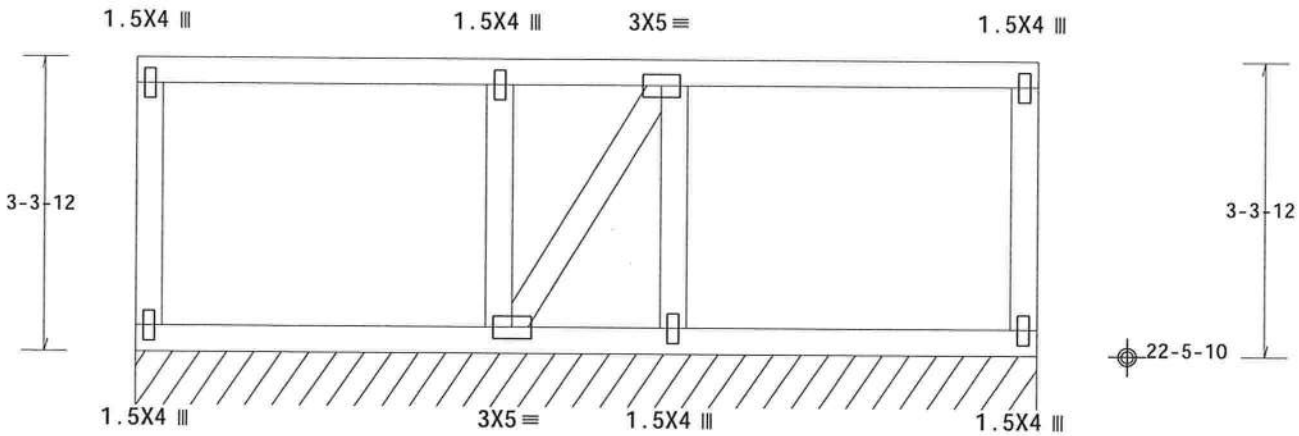

9-11-1 Over Continuous Support

R=43 PLT U=11 PLT W=9-11-1

PLT TYP. Wave

Design Crit: FBC2010Res/TPI-2007(STD)
FT/RT=20%(0%)/10(0) 10.03.10.1223.10 QTY:1 FL/-/5/-/-/R/- Scale =.5"/Ft.

WALTER P. FINN LICENSE No.22839 STATE OF FLORIDA PROFESSIONAL ENGINEER

12/19/2012

ALPINE
ITW Building Components Group Inc.
Haines City, FL 33844
FL COA #0 278

WARNING READ AND FOLLOW ALL NOTES ON THIS SHEET!
IMPORTANT FURNISH THIS DESIGN TO ALL CONTRACTORS INCLUDING INSTALLERS.

Trusses require extreme care in fabricating, handling, shipping, installing and bracing. Refer to and follow the latest edition of BCSI (Building Component Safety Information, by TPI and WTCA) recommended practices prior to performing these functions. Installers shall provide temporary bracing per BCSI. Unless noted otherwise, top chord shall have properly attached structural sheathing and bottom chord shall have a properly attached rigid ceiling. Locations shown for permanent lateral restraint of webs shall have bracing installed per BCSI sections B3, B7 or B10, as applicable.

ITW Building Components Group Inc. (ITWBCG) shall not be responsible for any deviation from this design, any failure to build the truss in conformance with ANSI/TPI 1, or for handling, shipping, installation and bracing of trusses. Apply plates to each face of truss and position as shown above and on the Joint Details, unless noted otherwise. Refer to drawings 160A-Z for standard plate positions. A seal on this drawing or cover page listing this drawing, indicates acceptance of professional engineering responsibility solely for the design shown. The suitability and use of this design for any structure is the responsibility of the Building Designer per ANSI/TPI 1 Sec.2. For more information see: This job's general notes page; ITW-BCG: www.itwbcg.com; TPI: www.tpinst.org; WTCA: www.sbcindustry.com; ICC: www.iccsafe.org

TC LL	20.0 PSF	REF	R9114- 87235
TC DL	10.0 PSF	DATE	12/19/12
BC DL	10.0 PSF	DRW	HCUSR9114 12354241
BC LL	0.0 PSF	HC-ENG	SSB/WPF
TOT.LD.	40.0 PSF	SEQN-	285573
DUR.FAC.	1.25	FROM	SDY
SPACING	16.0"	JREF-	1US59114Z05

(120912--Anderson Truss Co. -Patel Residence -- Lot 1 Hills Of Windsor , ** - PB29)

THIS DWG PREPARED FROM COMPUTER INPUT (LOADS & DIMENSIONS) SUBMITTED BY TRUSS MFR.

Top chord 2x4 SP_#2__12A
Bot chord 2x4 SP_#2__12A
Webs 2x4 SP_#2__12A

Lumber grades designated with "12A" use design values approved 1/5/2012 by ALSC.

Wind loads and reactions based on MWFRS with additional C&C member design.

Trusses to be spaced at 16.0" OC maximum.

Provide for complete drainage of roof.

Refer to drawing PB160100212 for piggyback detail. Top chord of supporting truss under piggyback to be braced @ 24" O.C., unless otherwise specified.

120 mph wind, 27.11 ft mean hgt, ASCE 7-10, CLOSED bldg, Located anywhere in roof, RISK CAT II, EXP B, wind TC DL=5.0 psf, wind BC DL=2.0 psf. GCpi(+/-)=0.18

End verticals not exposed to wind pressure.

In lieu of rigid ceiling use purlins to brace BC @ 24" OC.

Deflection meets L/360 live and L/240 total load. Creep increase factor for dead load is 1.50.

Truss must be installed as shown with top chord up.

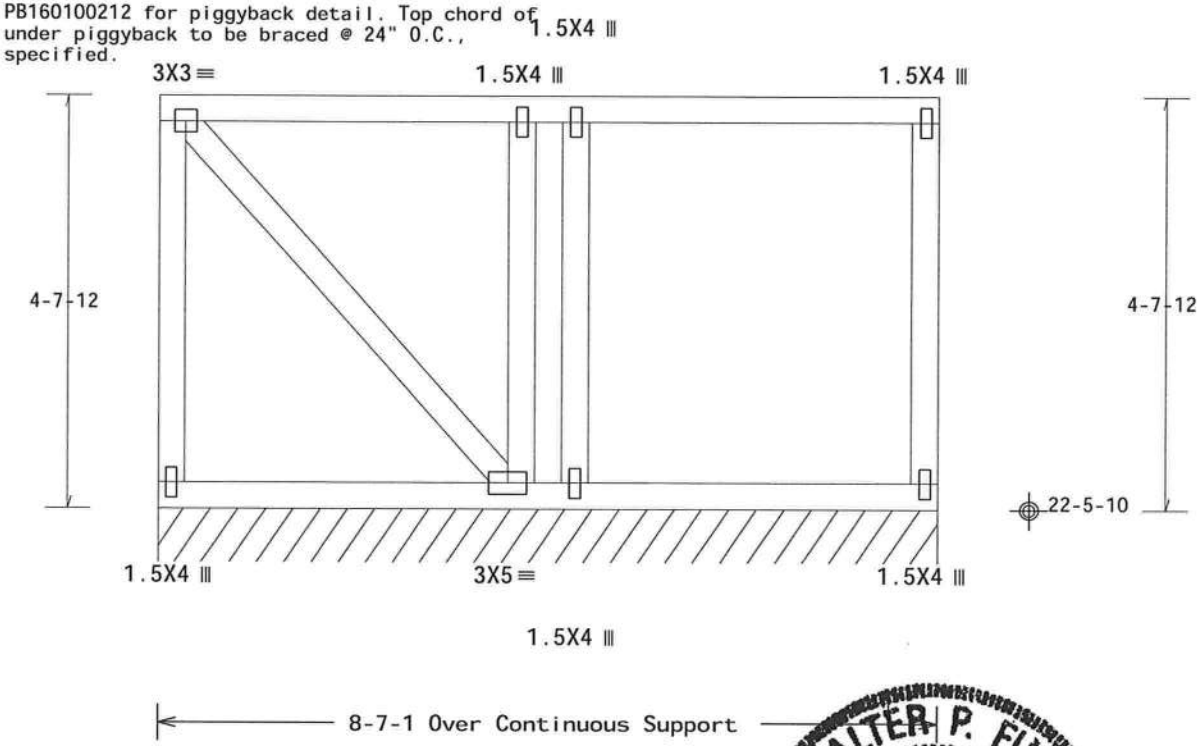

PLT TYP. Wave

Design Crit: FBC2010Res/TPI-2007(STD)
FT/RT=20%(0%)/10(0)

10.03.10 1223.10 QTY 1

FL/-/5/-/-/R/-

Scale =.5"/Ft.

WALTER P. FINN LICENSE No. 22839 STATE OF FLORIDA PROFESSIONAL ENGINEER

12/19/2012

ALPINE
ITW Building Components Group Inc.
Haines City, FL 33844
FL COA #0 278

WARNING READ AND FOLLOW ALL NOTES ON THIS SHEET!
IMPORTANT FURNISH THIS DESIGN TO ALL CONTRACTORS INCLUDING INSTALLERS.

Trusses require extreme care in fabricating, handling, shipping, installing and bracing. Refer to and follow the latest edition of BCSI (Building Component Safety Information, by TPI and WTCA) for safety practices prior to performing these functions. Installers shall provide temporary bracing per BCSI. Unless noted otherwise, top chord shall have properly attached structural sheathing and bottom chord shall have a properly attached rigid ceiling. Locations shown for permanent lateral restraint of webs shall have bracing installed per BCSI sections B3, B7 or B10, as applicable.

ITW Building Components Group Inc. (ITWBCG) shall not be responsible for any deviation from this drawing, any failure to build the truss in conformance with ANSI/TPI 1, or for handling, shipping, installation and bracing of trusses. Apply plates to each face of truss and position as shown above and on the Joint Details, unless noted otherwise. Refer to drawings 160A-Z for standard plate positions. A seal on this drawing or cover page listing this drawing, indicates acceptance of professional engineering responsibility solely for the design shown. The suitability and use of this design for any structure is the responsibility of the Building Designer per ANSI/TPI 1 Sec.2. For more information see: This job's general notes page; ITW-BCG: www.itwbcg.com; TPI: www.tpinst.org; WTCA: www.sbcindustry.com; ICC: www.iccsafe.org

TC LL	20.0 PSF	REF	R9114- 87236
TC DL	10.0 PSF	DATE	12/19/12
BC DL	10.0 PSF	DRW	HCUSR9114 12354242
BC LL	0.0 PSF	HC-ENG	SSB/WPF
TOT.LD.	40.0 PSF	SEQN-	285574
DUR.FAC.	1.25	FROM	SDY
SPACING	16.0"	JREF-	1US59114Z05

(120912--Anderson Truss Co. -Patel Residence -- Lot 1 Hills Of Windsor , ** - PB30)

THIS DWG PREPARED FROM COMPUTER INPUT (LOADS & DIMENSIONS) SUBMITTED BY TRUSS MFR.

Top chord 2x4 SP_#2__12A
Bot chord 2x4 SP_#2__12A
Webs 2x4 SP_#2__12A

Lumber grades designated with "12A" use design values approved 1/5/2012 by ALSC.

Wind loads and reactions based on MWFRS with additional C&C member design.

In lieu of rigid ceiling use purlins to brace BC @ 24" OC.

Truss must be installed as shown with top chord up.

Refer to drawing PB160100212 for piggyback detail. Top chord of supporting truss under piggyback to be braced @ 24" O.C., unless otherwise specified.

120 mph wind, 28.45 ft mean hgt, ASCE 7-10, CLOSED bldg, Located anywhere in roof, RISK CAT II, EXP B, wind TC DL=5.0 psf, wind BC DL=2.0 psf. GCpi(+/-)=0.18

End verticals not exposed to wind pressure.

Trusses to be spaced at 16.0" OC maximum.

Deflection meets L/360 live and L/240 total load. Creep increase factor for dead load is 1.50.

Provide for complete drainage of roof.

MWFRS loads based on trusses located at least 14.22 ft. from roof edge.

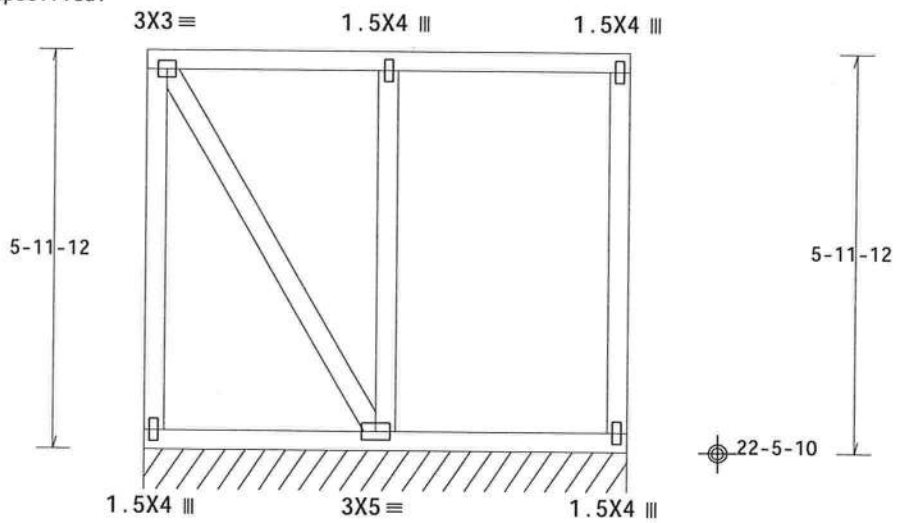

← 7-1-1 Over Continuous Support →

R=43 PLF U=12 PLF W=7-1-1

PLT TYP. Wave

Design Crit: FBC2010Res/TPI-2007(STD)
FT/RT=20%(0%)/10(0)

10.03.10.1233.10 QTY:

FL/-/5/-/-/R/-

Scale =.375"/Ft.

WALTER P. FINN LICENSE No.22839 STATE OF FLORIDA PROFESSIONAL ENGINEER

12/19/2012

ALPINE
ITW Building Components Group Inc.
Haines City, FL 33844
FL COA #0 278

WARNING READ AND FOLLOW ALL NOTES ON THIS SHEET!
IMPORTANT FURNISH THIS DESIGN TO ALL CONTRACTORS INCLUDING INSTALLERS.

Trusses require extreme care in fabricating, handling, shipping, installing and bracing. Refer to and follow the latest edition of BCSI (Building Component Safety Information, by TPI and WTCA) for safety practices prior to performing these functions. Installers shall provide temporary bracing per BCSI. Unless noted otherwise, top chord shall have properly attached structural sheathing and bottom chord shall have a properly attached rigid ceiling. Locations shown for permanent lateral restraint of webs shall have bracing installed per BCSI sections B3, B7 or B10, as applicable.

ITW Building Components Group Inc. (ITWBCG) shall not be responsible for any deviation from this design, any failure to build the truss in conformance with ANSI/TPI 1, or for handling, shipping, installation & bracing of trusses. Apply plates to each face of truss and position as shown above and on the Joint Details, unless noted otherwise. Refer to drawings 160A-Z for standard plate positions. A seal on this drawing or cover page listing this drawing, indicates acceptance of professional engineering responsibility solely for the design shown. The suitability and use of this design for any structure is the responsibility of the Building Designer per ANSI/TPI 1 Sec.2. For more information see: This job's general notes page; ITW-BCG: www.itwbcg.com; TPI: www.tpinst.org; WTCA: www.sbcindustry.com; ICC: www.iccsafe.org

TC LL	20.0 PSF	REF	R9114- 87237
TC DL	10.0 PSF	DATE	12/19/12
BC DL	10.0 PSF	DRW	HCUSR9114 12354243
BC LL	0.0 PSF	HC-ENG	SSB/WPF
TOT.LD.	40.0 PSF	SEQN-	285575
DUR.FAC.	1.25	FROM	SDY
SPACING	16.0"	JREF-	1US59114Z05

(120912--Anderson Truss Co. -Patel Residence -- Lot 1 Hills Of Windsor , ** - PB31)

THIS DWG PREPARED FROM COMPUTER INPUT (LOADS & DIMENSIONS) SUBMITTED BY TRUSS MFR.

Top chord 2x4 SP_#2__12A
Bot chord 2x4 SP_#2__12A
Webs 2x4 SP_#2__12A

Lumber grades designated with "12A" use design values approved 1/5/2012 by ALSC.

Wind loads and reactions based on MWFRS with additional C&C member design.

In lieu of rigid ceiling use purlins to brace BC @ 24" OC.

Deflection meets L/360 live and L/240 total load. Creep increase factor for dead load is 1.50.

120 mph wind, 29.38 ft mean hgt, ASCE 7-10, CLOSED bldg, Located anywhere in roof, RISK CAT II, EXP B, wind TC DL=5.0 psf, wind BC DL=2.0 psf. GCpi(+/-)=0.18

End verticals not exposed to wind pressure.

Trusses to be spaced at 16.0" OC maximum.

Provide for complete drainage of roof.

Truss must be installed as shown with top chord up.

MWFRS loads based on trusses located at least 14.69 ft. from roof edge.

Refer to drawing PB160100212 for piggyback detail. Top chord of supporting truss under piggyback to be braced @ 24" O.C., unless otherwise specified.

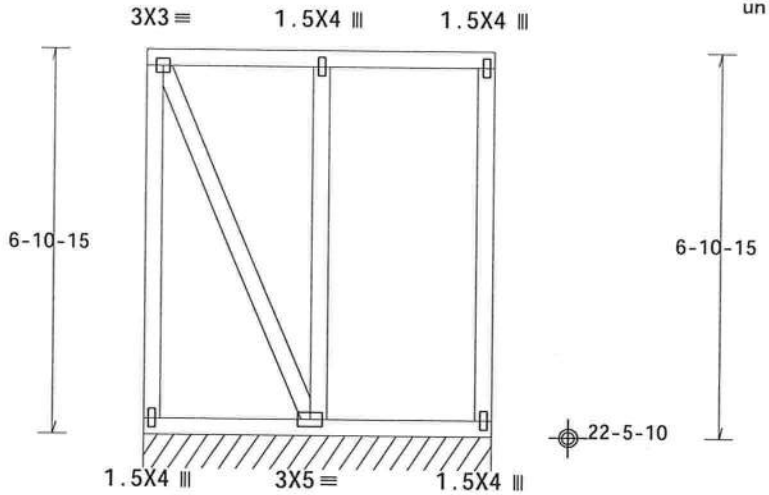

6-1-14 Over Continuous Support

R=43 PLF U=13 PLF W=6-1-14

WALTER P. FINN
LICENSE
No. 22839
STATE OF FLORIDA
PROFESSIONAL ENGINEER

12/19/2012

PLT TYP. Wave

Design Crit: FBC2010Res/TPI-2007(STD)
FT/RT=20%(0%)/10(0) ★ 10.03.10 1223.10 ★ QTY:1 FL/-/5/-/-/R/- Scale =.3125"/Ft.

ALPINE
ITW Building Components Group Inc.
Haines City, FL 33844
FL COA #0 278

WARNING READ AND FOLLOW ALL NOTES ON THIS SHEET!
IMPORTANT FURNISH THIS DESIGN TO ALL CONTRACTORS INCLUDING INSTALLERS.

Trusses require extreme care in fabricating, handling, shipping, installing and bracing. Refer to and follow the latest edition of BCSI (Building Component Safety Information, by TPI and WTCA) for safety practices prior to performing these functions. Installers shall provide temporary bracing per BCSI. Unless noted otherwise, top chord shall have properly attached structural sheathing and bottom chord shall have a properly attached rigid ceiling. Locations shown for permanent lateral restraint of webs shall have bracing installed per BCSI sections B3, B7 or B10, as applicable.

ITW Building Components Group Inc. (ITWBCG) shall not be responsible for any deviation from this design, any failure to build the truss in conformance with ANSI/TPI 1, or for handling, shipping, installation and bracing of trusses. Apply plates to each face of truss and position as shown above and on the Joint Details, unless noted otherwise. Refer to drawings 160A-Z for standard plate positions. A seal on this drawing or cover page listing this drawing, indicates acceptance of professional engineering responsibility solely for the design shown. The suitability and use of this design for any structure is the responsibility of the Building Designer per ANSI/TPI 1 Sec.2. For more information see: This job's general notes page; ITW-BCG: www.itwbcg.com; TPI: www.tpinst.org; WTCA: www.sbcindustry.com; ICC: www.iccsafe.org

TC LL	20.0 PSF	REF	R9114- 87238
TC DL	10.0 PSF	DATE	12/19/12
BC DL	10.0 PSF	DRW	HCUSR9114 12354244
BC LL	0.0 PSF	HC-ENG	SSB/WPF
TOT.LD.	40.0 PSF	SEQN-	285576
DUR.FAC.	1.25	FROM	SDY
SPACING	16.0"	JREF-	1US59114Z05

(120912--Anderson Truss Co. -Patel Residence -- Lot 1 Hills Of Windsor , ** - PB32)

THIS DWG PREPARED FROM COMPUTER INPUT (LOADS & DIMENSIONS) SUBMITTED BY TRUSS MFR.

Top chord 2x4 SP_#2__12A
Bot chord 2x4 SP_#2__12A
Webs 2x4 SP_#2__12A

Lumber grades designated with "12A" use design values approved 1/5/2012 by ALSC.

Wind loads and reactions based on MWFRS with additional C&C member design.

End verticals not exposed to wind pressure.

(a) Continuous lateral bracing equally spaced on member.

In lieu of rigid ceiling use purlins to brace BC @ 24" OC.

Trusses to be spaced at 16.0" OC maximum.

Deflection meets L/360 live and L/240 total load. Creep increase factor for dead load is 1.50.

MWFRS loads based on trusses located at least 15.18 ft. from roof edge.

Refer to drawing PB160100212 for piggyback detail. Top chord of supporting truss under piggyback to be braced @ 24" O.C., unless otherwise specified.

Special loads
------(Lumber Dur.Fac.=1.25 / Plate Dur.Fac.=1.25)

TC- From	46 plf at	0.00 to	46 plf at	4.11
TC- From	46 plf at	4.11 to	46 plf at	4.80
BC- From	3 plf at	0.00 to	3 plf at	4.80

120 mph wind, 30.37 ft mean hgt, ASCE 7-10, CLOSED bldg, Located anywhere in roof, RISK CAT II, EXP B, wind TC DL=5.0 psf, wind BC DL=2.0 psf. GCpi(+/-)=0.18

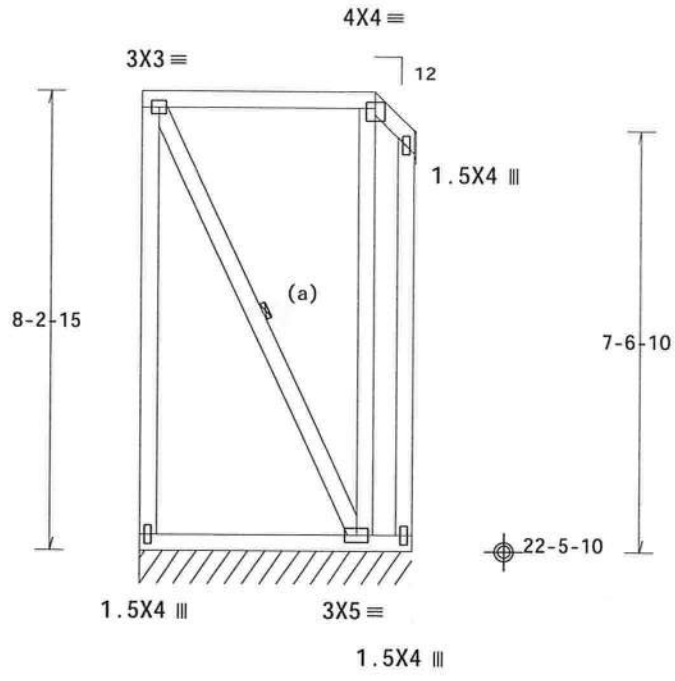

Design Crit: FBC2010Res/TPI-2007(STD)
FT/RT=20%(0%)/10(0)

PLT TYP. Wave

10.03.10 12.23.10 QTY: FL/-/5/-/-/R/- Scale =.3125"/Ft.

ALPINE
ITW Building Components Group Inc.
Haines City, FL 33844
FL COA #0 278

WARNING READ AND FOLLOW ALL NOTES ON THIS SHEET!
IMPORTANT FURNISH THIS DESIGN TO ALL CONTRACTORS INCLUDING INSTALLERS.

Trusses require extreme care in fabricating, handling, shipping, installing and bracing. Refer to and follow the latest edition of BCSI (Building Component Safety Information, by TPI and WTCA) for standard practices prior to performing these functions. Installers shall provide temporary bracing per BCSI. Unless noted otherwise, top chord shall have properly attached structural sheathing and bottom chord shall have a properly attached rigid ceiling. Locations shown for permanent lateral restraint of webs shall have bracing installed per BCSI sections B3, B7 or B10, as applicable.

ITW Building Components Group Inc. (ITWBCG) shall not be responsible for any deviation from this design, any failure to build the truss in conformance with ANSI/TPI 1, or for handling, shipping, installation & bracing of trusses. Apply plates to each face of truss and position as shown above and on the Joint Details, unless noted otherwise. Refer to drawings 160A-Z for standard plate positions. A seal on this drawing or cover page listing this drawing, indicates acceptance of professional engineering responsibility solely for the design shown. The suitability and use of this design for any structure is the responsibility of the Building Designer per ANSI/TPI 1 Sec.2. For more information see: This job's general notes page; ITW-BCG: www.itwbcg.com; TPI: www.tpinst.org; WTCA: www.sbcindustry.com; ICC: www.iccsafe.org

WALTER P. FINN
LICENSE
No. 22839
STATE OF FLORIDA
PROFESSIONAL ENGINEER
12/19/2012

TC LL	20.0 PSF	REF	R9114- 87239
TC DL	10.0 PSF	DATE	12/19/12
BC DL	10.0 PSF	DRW	HCUSR9114 12354245
BC LL	0.0 PSF	HC-ENG	SSB/WPF
TOT.LD.	40.0 PSF	SEQN-	285577
DUR.FAC.	1.25	FROM	SDY
SPACING	16.0"	JREF-	1US59114Z05

(120912--Anderson Truss Co. -Patel Residence -- Lot 1 Hills Of Windsor , ** - PB33)

THIS DWG PREPARED FROM COMPUTER INPUT (LOADS & DIMENSIONS) SUBMITTED BY TRUSS MFR.

Top chord 2x4 SP_#2__12A
Bot chord 2x4 SP_#2__12A
Webs 2x4 SP_#2__12A

Lumber grades designated with "12A" use design values approved 1/5/2012 by ALSC.

Wind loads and reactions based on MWFRS with additional C&C member design.

End verticals not exposed to wind pressure.

In lieu of rigid ceiling use purlins to brace BC @ 24" OC.

Trusses to be spaced at 16.0" OC maximum.

Deflection meets L/360 live and L/240 total load. Creep increase factor for dead load is 1.50.

MWFRS loads based on trusses located at least 15.52 ft. from roof edge.

Refer to drawing PB160100212 for piggyback detail. Top chord of supporting truss under piggyback to be braced @ 24" O.C., unless otherwise specified.

Special loads
------(Lumber Dur.Fac.=1.25 / Plate Dur.Fac.=1.25)
TC- From 46 plf at 0.00 to 46 plf at 1.44
TC- From 46 plf at 1.44 to 46 plf at 3.47
BC- From 3 plf at 0.00 to 3 plf at 3.47

120 mph wind, 31.03 ft mean hgt, ASCE 7-10, CLOSED bldg, Located anywhere in roof, RISK CAT II, EXP B, wind TC DL=5.0 psf, wind BC DL=2.0 psf. GCpi(+/-)=0.18

(a) Continuous lateral bracing equally spaced on member.

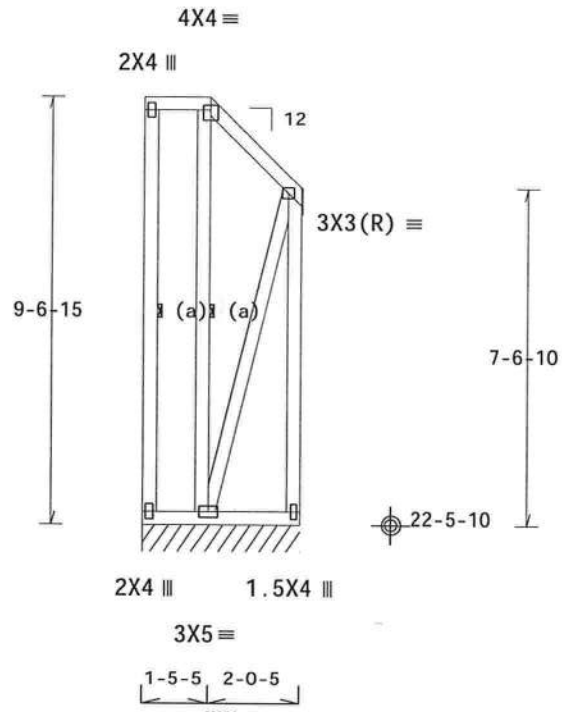

PLT TYP. Wave

Design Crit: FBC2010Res/TPI-2007(STD)
FT/RT=20%(0%)/10(0)

03.10.13 23.10 DT:

FL/-/5/-/-/R/-

Scale =.25"/Ft.

ALPINE
ITW Building Components Group Inc.
Haines City, FL 33844
FL COA #0 278

WARNING READ AND FOLLOW ALL NOTES ON THIS SHEET!
IMPORTANT FURNISH THIS DESIGN TO ALL CONTRACTORS INCLUDING INSTALLERS.

Trusses require extreme care in fabricating, handling, shipping, installing and bracing. Refer to and follow the latest edition of BCSI (Building Component Safety Information, by TPI and WTCA) for general guidance practices prior to performing these functions. Installers shall provide temporary bracing per BCSI. Unless noted otherwise, top chord shall have properly attached structural sheathing and bottom chord shall have a properly attached rigid ceiling. Locations shown for permanent lateral restraint of webs shall have bracing installed per BCSI sections B3, B7 or B10, as applicable.

ITW Building Components Group Inc. (ITWBCG) shall not be responsible for any deviation from this design, any failure to build the truss in conformance with ANSI/TPI 1, or for handling, shipping, installation & bracing of trusses. Apply plates to each face of truss and position as shown above and on the Joint Details, unless noted otherwise. Refer to drawings 160A-Z for standard plate positions. A seal on this drawing or cover page listing this drawing, indicates acceptance of professional engineering responsibility solely for the design shown. The suitability and use of this design for any structure is the responsibility of the Building Designer per ANSI/TPI 1 Sec.2. For more information see: This job's general notes page; ITW-BCG: www.itwbcg.com; TPI: www.tpinst.org; WTCA: www.sbcindustry.com; ICC: www.iccsafe.org

WALTER P. FINN
LICENSE
No.22839
STATE OF FLORIDA
PROFESSIONAL ENGINEER
12/19/2012

TC LL	20.0 PSF	REF	R9114- 87240
TC DL	10.0 PSF	DATE	12/19/12
BC DL	10.0 PSF	DRW	HCUSR9114 12354246
BC LL	0.0 PSF	HC-ENG	SSB/WPF
TOT.LD.	40.0 PSF	SEQN-	285578
DUR.FAC.	1.25	FROM	SDY
SPACING	16.0"	JREF-	1US59114Z05

(120912--Anderson Truss Co. -Patel Residence -- Lot 1 Hills Of Windsor , ** - PB34)

THIS DWG PREPARED FROM COMPUTER INPUT (LOADS & DIMENSIONS) SUBMITTED BY TRUSS MFR.

Top chord 2x4 SP_#2__12A
Bot chord 2x4 SP_#2__12A
Webs 2x4 SP_#2__12A

Lumber grades designated with "12A" use design values approved 1/5/2012 by ALSC.

MWFRS loads based on trusses located at least 15.54 ft. from roof edge.

Refer to drawing PB160100212 for piggyback detail. Top chord of supporting truss under piggyback to be braced @ 24" O.C., unless otherwise specified.

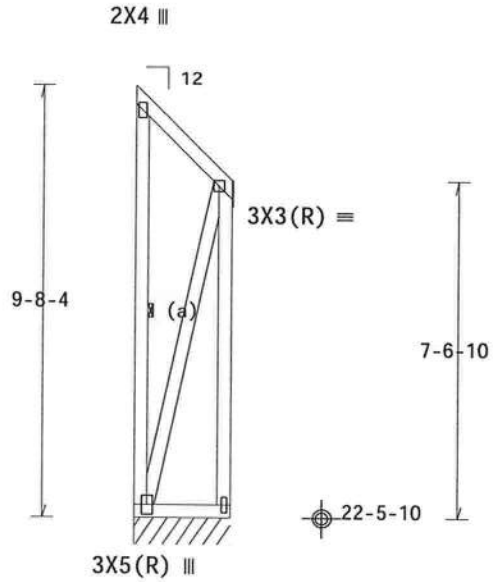

2-1-14 Over Continuous Support

R=48 PLF U=1 PLF W=2-1-14
RL=-10 PLF

Special loads
------(Lumber Dur.Fac.=1.25 / Plate Dur.Fac.=1.25)
TC- From 46 plf at 0.00 to 46 plf at 2.13
BC- From 3 plf at 0.00 to 3 plf at 2.13

120 mph wind, 31.09 ft mean hgt, ASCE 7-10, CLOSED bldg, Located anywhere in roof, RISK CAT II, EXP B, wind TC DL=5.0 psf, wind BC DL=2.0 psf. GCpi(+/-)=0.18

Wind loads and reactions based on MWFRS with additional C&C member design.

End verticals not exposed to wind pressure.

(a) Continuous lateral bracing equally spaced on member.

In lieu of rigid ceiling use purlins to brace BC @ 24" OC.

Trusses to be spaced at 16.0" OC maximum.

Deflection meets L/360 live and L/240 total load. Creep increase factor for dead load is 1.50.

PLT TYP. Wave

Design Crit: FBC2010Res/TPI-2007(STD)
FT/RT=20%(0%)/10(0)

10.03.10.12.23.10 QTY: FL/-/5/-/-/R/- Scale =.25"/Ft.

WALTER P. FINN LICENSE No.22839 STATE OF FLORIDA PROFESSIONAL ENGINEER

12/19/2012

ALPINE
ITW Building Components Group Inc.
Haines City, FL 33844
FL COA #0 278

WARNING READ AND FOLLOW ALL NOTES ON THIS SHEET!
IMPORTANT FURNISH THIS DESIGN TO ALL CONTRACTORS INCLUDING INSTALLERS.

Trusses require extreme care in fabricating, handling, shipping, installing and bracing. Refer to and follow the latest edition of BCSI (Building Component Safety Information, by TPI and WTCA) for standard practices prior to performing these functions. Installers shall provide temporary bracing per BCSI. Unless noted otherwise, top chord shall have properly attached structural sheathing and bottom chord shall have a properly attached rigid ceiling. Locations shown for permanent lateral restraint of webs shall have bracing installed per BCSI sections B3, B7 or B10, as applicable.

ITW Building Components Group Inc. (ITWBCG) shall not be responsible for any deviation from this design, any failure to build the truss in conformance with ANSI/TPI 1, or for handling, shipping, installation & bracing of trusses. Apply plates to each face of truss and position as shown above and on the Joint Details, unless noted otherwise. Refer to drawings 160A-Z for standard plate positions. A seal on this drawing or cover page listing this drawing, indicates acceptance of professional engineering responsibility solely for the design shown. The suitability and use of this design for any structure is the responsibility of the Building Designer per ANSI/TPI 1 Sec.2. For more information see: This job's general notes page; ITW-BCG: www.itwbcg.com; TPI: www.tpinst.org; WTCA: www.sbcindustry.com; ICC: www.iccsafe.org

TC LL	20.0 PSF	REF	R9114- 87241
TC DL	10.0 PSF	DATE	12/19/12
BC DL	10.0 PSF	DRW	HCUSR9114 12354247
BC LL	0.0 PSF	HC-ENG	SSB/WPF
TOT.LD.	40.0 PSF	SEQN-	285579
DUR.FAC.	1.25	FROM	SDY
SPACING	16.0"	JREF-	1US59114Z05

(120912--Anderson Truss Co. -Patel Residence -- Lot 1 Hills Of Windsor , ** - HJ1)

THIS DWG PREPARED FROM COMPUTER INPUT (LOADS & DIMENSIONS) SUBMITTED BY TRUSS MFR.

Top chord 2x4 SP_#2__12A
Bot chord 2x4 SP_#2__12A
Webs 2x4 SP_#2__12A

Lumber grades designated with "12A" use design values approved 1/5/2012 by ALSC.

Left end vertical not exposed to wind pressure.

120 mph wind, 28.42 ft mean hgt, ASCE 7-10, CLOSED bldg, Located anywhere in roof, RISK CAT II, EXP B, wind TC DL=5.0 psf, wind BC DL=5.0 psf. GCpi(+/-)=0.18

Wind loads and reactions based on MWFRS.

Hipjack supports 1-9-15 setback jacks with no webs.

Deflection meets L/360 live and L/240 total load. Creep increase factor for dead load is 1.50.

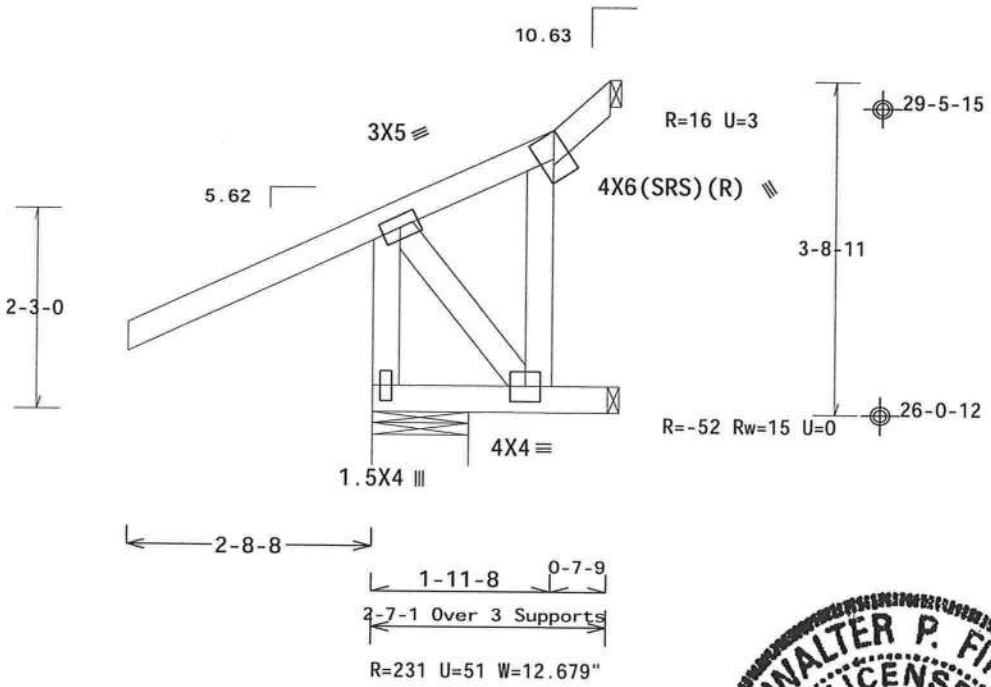

PLT TYP. Wave

Design Crit: FBC2010Res/TPI-2007(STD)
FT/RT=20%(0%)/10(0)

10.03.10.1223.10 QTY 1 FL/-/5/-/-/R/- Scale =.5"/Ft.

WALTER P. FINN LICENSE No. 22839 STATE OF FLORIDA PROFESSIONAL ENGINEER

12/19/2012

ALPINE
ITW Building Components Group Inc.
Haines City, FL 33844
FL COA #0 278

WARNING READ AND FOLLOW ALL NOTES ON THIS SHEET!
IMPORTANT FURNISH THIS DESIGN TO ALL CONTRACTORS INCLUDING INSTALLERS.

Trusses require extreme care in fabricating, handling, shipping, installing and bracing. Refer to and follow the latest edition of BCSI (Building Component Safety Information, by TPI and WTCA) regarding practices prior to performing these functions. Installers shall provide temporary bracing per BCSI. Unless noted otherwise, top chord shall have properly attached structural sheathing and bottom chord shall have a properly attached rigid ceiling. Locations shown for permanent lateral restraint of webs shall have bracing installed per BCSI sections B3, B7 or B10, as applicable.

ITW Building Components Group Inc. (ITWBCG) shall not be responsible for any deviation from this design, any failure to build the truss in conformance with ANSI/TPI 1, or for handling, shipping, installation and bracing of trusses. Apply plates to each face of truss and position as shown above and on the Joint Details, unless noted otherwise. Refer to drawings 160A-Z for standard plate positions. A seal on this drawing or cover page listing this drawing, indicates acceptance of professional engineering responsibility solely for the design shown. The suitability and use of this design for any structure is the responsibility of the Building Designer per ANSI/TPI 1 Sec.2. For more information see: This job's general notes page; ITW-BCG: www.itwbcg.com; TPI: www.tpinst.org; WTCA: www.sbcindustry.com; ICC: www.iccsafe.org

TC LL	20.0 PSF	REF	R9114- 87242
TC DL	10.0 PSF	DATE	12/19/12
BC DL	10.0 PSF	DRW	HCUSR9114 12354157
BC LL	0.0 PSF	HC-ENG	SSB/WPF
TOT.LD.	40.0 PSF	SEQN-	285641
DUR.FAC.	1.25	FROM	SDY
SPACING	24.0"	JREF-	1US59114Z05

(120912--Anderson Truss Co. -Patel Residence -- Lot 1 Hills Of Windsor , ** - HJ2)

THIS DWG PREPARED FROM COMPUTER INPUT (LOADS & DIMENSIONS) SUBMITTED BY TRUSS MFR.

Top chord 2x6 SP_#1_Dense_12A :T2 2x4 SP_#2__12A:
Bot chord 2x4 SP_#2__12A
Webs 2x4 SP_#2__12A

Lumber grades designated with "12A" use design values approved 1/5/2012 by ALSC.

Left end vertical not exposed to wind pressure.

120 mph wind, 29.05 ft mean hgt, ASCE 7-10, CLOSED bldg, Located anywhere in roof, RISK CAT II, EXP B, wind TC DL=5.0 psf, wind BC DL=5.0 psf. GCpi(+/-)=0.18

Wind loads and reactions based on MWFRS.

Hipjack supports 2-9-7 setback jacks with no webs.

Deflection meets L/360 live and L/240 total load. Creep increase factor for dead load is 1.50.

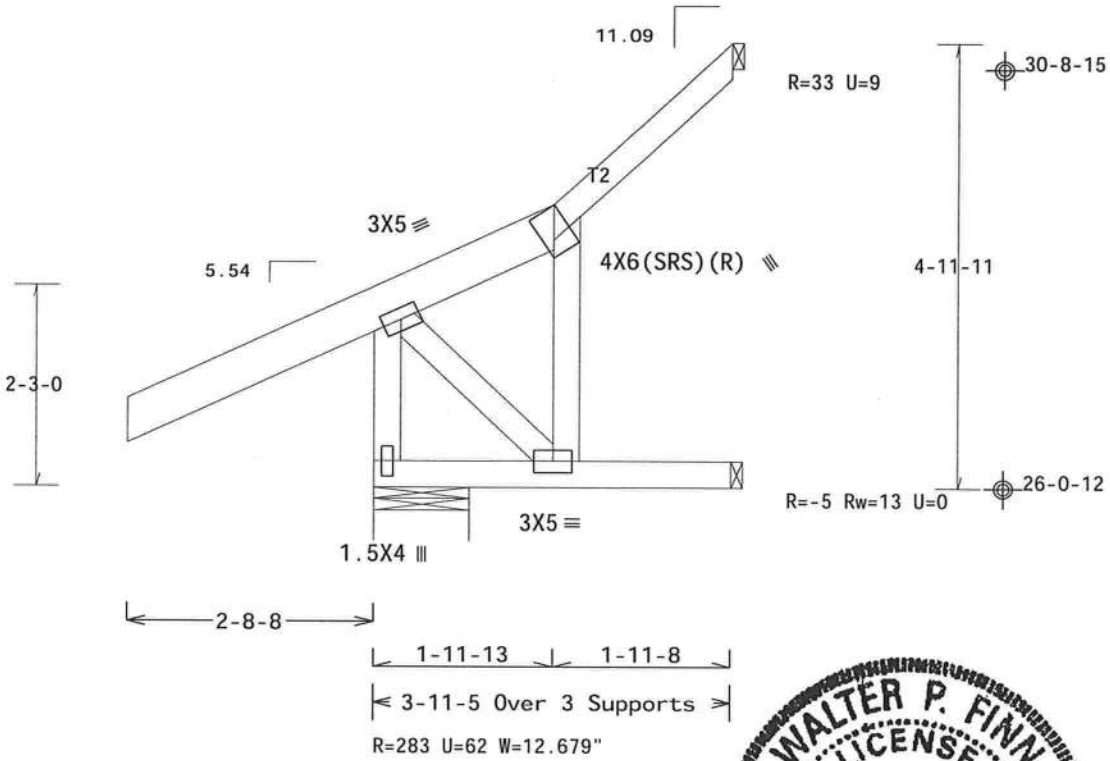

Design Crit: FBC2010Res/TPI-2007(STD)
FT/RT=20%(0%)/10(0)

PLT TYP. Wave

10.03.10.123.10 OTW

FL/-/5/-/-/R/-

Scale =.5"/Ft.

TC LL	20.0 PSF	REF	R9114- 87243
TC DL	10.0 PSF	DATE	12/19/12
BC DL	10.0 PSF	DRW	HCUSR9114 12354158
BC LL	0.0 PSF	HC-ENG	SSB/WPF
TOT.LD.	40.0 PSF	SEQN-	285642
DUR.FAC.	1.25	FROM	SDY
SPACING	24.0"	JREF-	1US59114Z05

WALTER P. FINN
LICENSE
No. 22839
STATE OF FLORIDA
PROFESSIONAL ENGINEER

12/19/2012

ALPINE
ITW Building Components Group Inc.
Haines City, FL 33844
FL COA #0 278

WARNING READ AND FOLLOW ALL NOTES ON THIS SHEET!
IMPORTANT FURNISH THIS DESIGN TO ALL CONTRACTORS INCLUDING INSTALLERS.

Trusses require extreme care in fabricating, handling, shipping, installing and bracing. Refer to and follow the latest edition of BCSI (Building Component Safety Information, by TPI and WTCA) for general guidelines practices prior to performing these functions. Installers shall provide temporary bracing per BCSI. Unless noted otherwise, top chord shall have properly attached structural sheathing and bottom chord shall have a properly attached rigid ceiling. Locations shown for permanent lateral restraint of webs shall have bracing installed per BCSI sections B3, B7 or B10, as applicable.

ITW Building Components Group Inc. (ITWBCG) shall not be responsible for any deviation from this design, any failure to build the truss in conformance with ANSI/TPI 1, or for handling, shipping, installation and bracing of trusses. Apply plates to each face of truss and position as shown above and on the Joint Details, unless noted otherwise. Refer to drawings 160A-Z for standard plate positions. A seal on this drawing or cover page listing this drawing, indicates acceptance of professional engineering responsibility solely for the design shown. The suitability and use of this design for any structure is the responsibility of the Building Designer per ANSI/TPI 1 Sec.2. For more information see: This job's general notes page; ITW-BCG: www.itwbcg.com; TPI: www.tpinst.org; WTCA: www.sbcindustry.com; ICC: www.iccsafe.org

(120912--Anderson Truss Co. -Patel Residence -- Lot 1 Hills Of Windsor , ** - HJ3)

THIS DWG PREPARED FROM COMPUTER INPUT (LOADS & DIMENSIONS) SUBMITTED BY TRUSS MFR.

Top chord 2x6 SP_#1_Dense_12A :T2 2x4 SP_#2__12A:
Bot chord 2x4 SP_#2__12A
Webs 2x4 SP_#2__12A

Lumber grades designated with "12A" use design values approved 1/5/2012 by ALSC.

Left end vertical not exposed to wind pressure.

120 mph wind, 29.10 ft mean hgt, ASCE 7-10, CLOSED bldg, Located anywhere in roof, RISK CAT II, EXP B, wind TC DL=5.0 psf, wind BC DL=5.0 psf. GCpi(+/-)=0.18

Wind loads and reactions based on MWFRS.

Hipjack supports 2-9-7 setback jacks with no webs.

Deflection meets L/360 live and L/240 total load. Creep increase factor for dead load is 1.50.

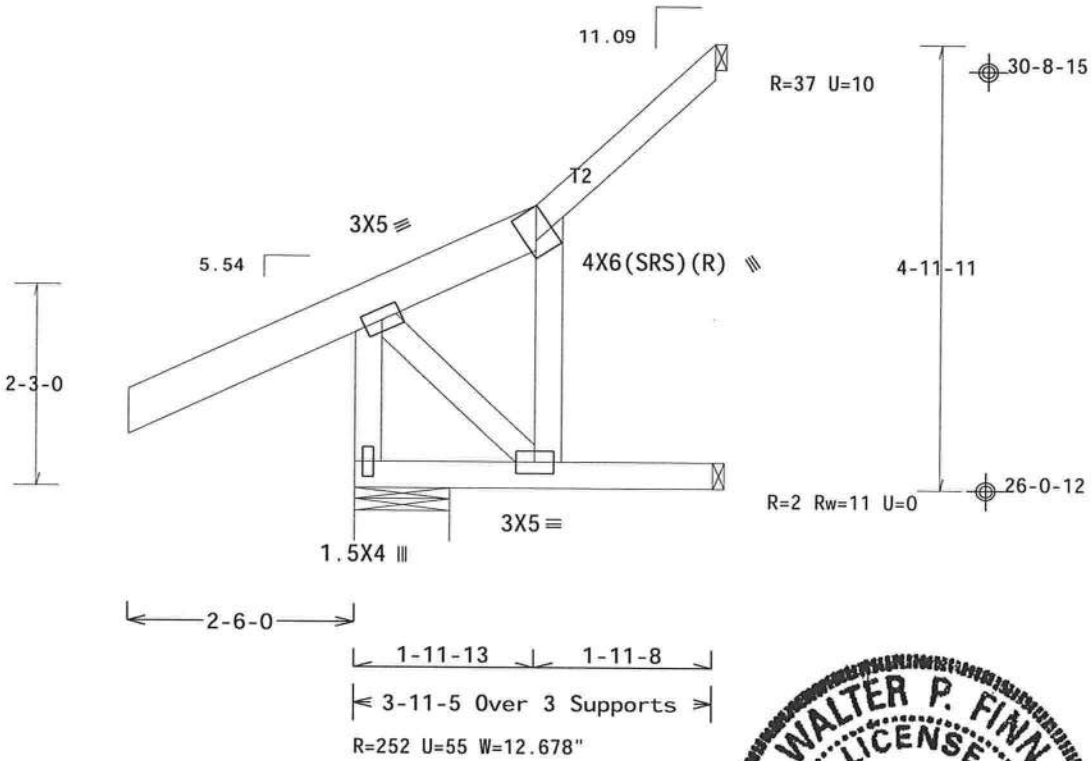

Design Crit: FBC2010Res/TPI-2007(STD)
FT/RT=20%(0%)/10(0)

PLT TYP. Wave

10.03.10.1 23.10 OTK:

FL/-/5/-/-/R/-

Scale =.5"/Ft.

TC LL	20.0 PSF	REF	R9114- 87244
TC DL	10.0 PSF	DATE	12/19/12
BC DL	10.0 PSF	DRW	HCUSR9114 12354159
BC LL	0.0 PSF	HC-ENG	SSB/WPF
TOT.LD.	40.0 PSF	SEQN-	285662
DUR.FAC.	1.25	FROM	SDY
SPACING	24.0"	JREF-	1US59114Z05

ALPINE
ITW Building Components Group Inc.
Haines City, FL 33844
FL COA #0 278

WARNING READ AND FOLLOW ALL NOTES ON THIS SHEET!
IMPORTANT FURNISH THIS DESIGN TO ALL CONTRACTORS INCLUDING INSTALLERS.

Trusses require extreme care in fabricating, handling, shipping, installing and bracing. Refer to and follow the latest edition of BCSI (Building Component Safety Information, by TPI and WTCA) for standard practices prior to performing these functions. Installers shall provide temporary bracing per BCSI. Unless noted otherwise, top chord shall have properly attached structural sheathing and bottom chord shall have a properly attached rigid ceiling. Locations shown for permanent lateral restraint of webs shall have bracing installed per BCSI sections B3, B7 or B10, as applicable.

ITW Building Components Group Inc. (ITWBCG) shall not be responsible for any deviation from this design, any failure to build the truss in conformance with ANSI/TPI 1, or for handling, shipping, installation & bracing of trusses. Apply plates to each face of truss and position as shown above and on the Joint Details, unless noted otherwise. Refer to drawings 160A-Z for standard plate positions. A seal on this drawing or cover page listing this drawing, indicates acceptance of professional engineering responsibility solely for the design shown. The suitability and use of this design for any structure is the responsibility of the Building Designer per ANSI/TPI 1 Sec.2. For more information see: This job's general notes page; ITW-BCG: www.itwbcg.com; TPI: www.tpinst.org; WTCA: www.sbcindustry.com; ICC: www.iccsafe.org

WALTER P. FINN
LICENSE
No.22839
STATE OF FLORIDA
PROFESSIONAL ENGINEER

12/19/2012

(120912--Anderson Truss Co. -Patel Residence -- Lot 1 Hills Of Windsor , ** - HJ4)

THIS DWG PREPARED FROM COMPUTER INPUT (LOADS & DIMENSIONS) SUBMITTED BY TRUSS MFR.

Top chord 2x6 SP_#1_Dense_12A :T2 2x4 SP_#2__12A:
Bot chord 2x4 SP_#2__12A
Webs 2x4 SP_#2__12A

Lumber grades designated with "12A" use design values approved 1/5/2012 by ALSC.

Left end vertical not exposed to wind pressure.

120 mph wind, 28.37 ft mean hgt, ASCE 7-10, CLOSED bldg, Located anywhere in roof, RISK CAT II, EXP B, wind TC DL=5.0 psf, wind BC DL=5.0 psf. GCpi(+/-)=0.18

Wind loads and reactions based on MWFRS.

Hipjack supports 2-3-8 setback jacks with no webs.

Deflection meets L/360 live and L/240 total load. Creep increase factor for dead load is 1.50.

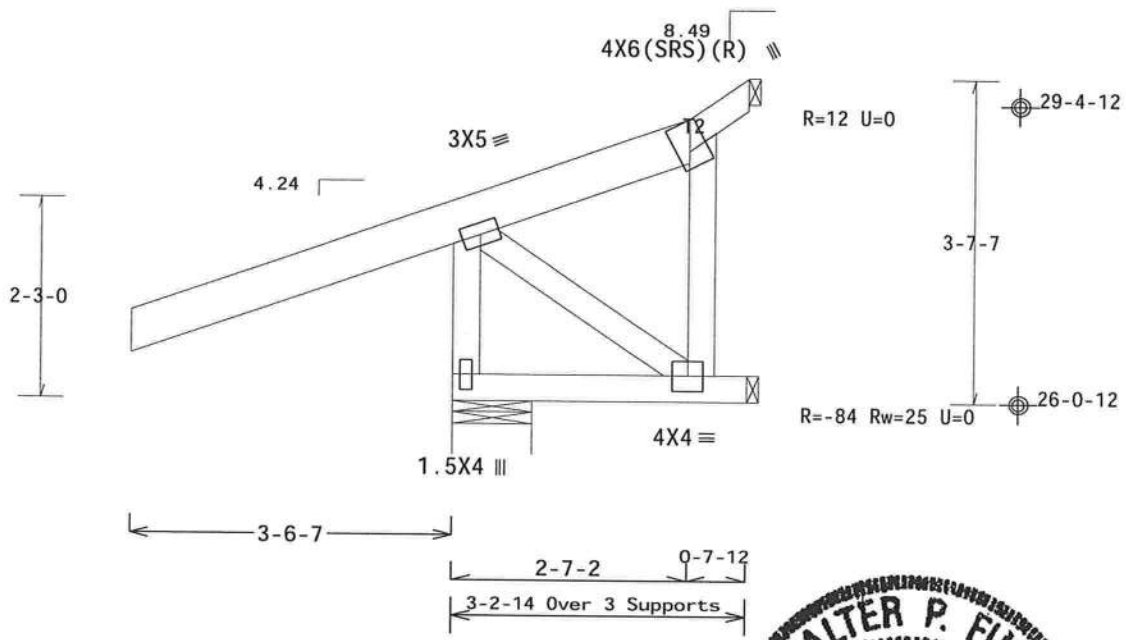

PLT TYP. Wave

Design Crit: FBC2010Res/TPI-2007(STD)
FT/RT=20%(0%)/10(0)

10.03.10.1223.10 QTY 1

FL/-/5/-/-/R/-

Scale =.5"/Ft.

WALTER P. FINN LICENSE No.22839 STATE OF FLORIDA PROFESSIONAL ENGINEER

12/19/2012

ALPINE
ITW Building Components Group Inc.
Haines City, FL 33844
FL COA #0 278

WARNING READ AND FOLLOW ALL NOTES ON THIS SHEET!
IMPORTANT FURNISH THIS DESIGN TO ALL CONTRACTORS INCLUDING INSTALLERS.

Trusses require extreme care in fabricating, handling, shipping, installing and bracing. Refer to and follow the latest edition of BCSI (Building Component Safety Information, by TPI and WTCA) for safety practices prior to performing these functions. Installers shall provide temporary bracing per BCSI. Unless noted otherwise, top chord shall have properly attached structural sheathing and bottom chord shall have a properly attached rigid ceiling. Locations shown for permanent lateral restraint of webs shall have bracing installed per BCSI sections B3, B7 or B10, as applicable.

ITW Building Components Group Inc. (ITWBCG) shall not be responsible for any deviation from this design, any failure to build the truss in conformance with ANSI/TPI 1, or for handling, shipping, installation and bracing of trusses. Apply plates to each face of truss and position as shown above and on the Joint Details, unless noted otherwise. Refer to drawings 160A-Z for standard plate positions. A seal on this drawing or cover page listing this drawing, indicates acceptance of professional engineering responsibility solely for the design shown. The suitability and use of this design for any structure is the responsibility of the Building Designer per ANSI/TPI 1 Sec.2. For more information see: This job's general notes page; ITW-BCG: www.itwbcg.com; TPI: www.tpinst.org; WTCA: www.sbcindustry.com; ICC: www.iccsafe.org

TC LL	20.0 PSF	REF	R9114- 87245
TC DL	10.0 PSF	DATE	12/19/12
BC DL	10.0 PSF	DRW	HCUSR9114 12354160
BC LL	0.0 PSF	HC-ENG	SSB/WPF
TOT.LD.	40.0 PSF	SEQN-	285643
DUR.FAC.	1.25	FROM	SDY
SPACING	24.0"	JREF-	1US59114Z05

(120912--Anderson Truss Co. -Patel Residence -- Lot 1 Hills Of Windsor , ** - HJ5)

THIS DWG PREPARED FROM COMPUTER INPUT (LOADS & DIMENSIONS) SUBMITTED BY TRUSS MFR.

Top chord 2x6 SP_#1_Dense_12A :T2 2x4 SP_#2__12A:
Bot chord 2x4 SP_#2__12A
Webs 2x4 SP_#2__12A

Lumber grades designated with "12A" use design values approved 1/5/2012 by ALSC.

Left end vertical not exposed to wind pressure.

120 mph wind, 31.71 ft mean hgt, ASCE 7-10, CLOSED bldg, Located anywhere in roof, RISK CAT II, EXP B, wind TC DL=5.0 psf, wind BC DL=5.0 psf. GCpi(+/-)=0.18

Wind loads and reactions based on MWFRS.

Hipjack supports 4-11-8 setback jacks with no webs.

Deflection meets L/360 live and L/240 total load. Creep increase factor for dead load is 1.50.

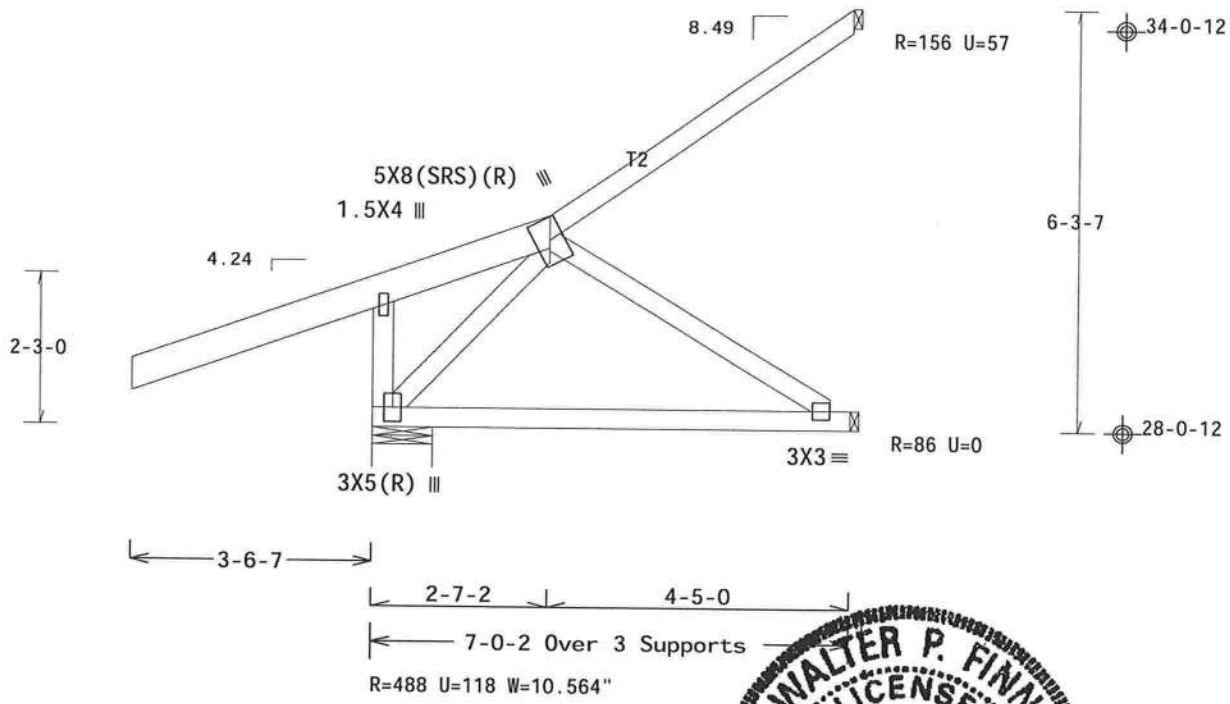

PLT TYP. Wave

Design Crit: FBC2010Res/TPI-2007(STD)
FT/RT=20%(0%)/10(0)

★ 10.03.10 1223.10 ★ QTY 3

FL/-/5/-/-/R/-

Scale =.375"/Ft.

WALTER P. FINN LICENSE No.22839 STATE OF FLORIDA PROFESSIONAL ENGINEER

12/19/2012

ALPINE
ITW Building Components Group Inc.
Haines City, FL 33844
FL COA #0 278

WARNING READ AND FOLLOW ALL NOTES ON THIS SHEET!
IMPORTANT FURNISH THIS DESIGN TO ALL CONTRACTORS INCLUDING INSTALLERS.

Trusses require extreme care in fabricating, handling, shipping, installing and bracing. Refer to and follow the latest edition of BCSI (Building Component Safety Information, by TPI and WTCA) for safety practices prior to performing these functions. Installers shall provide temporary bracing per BCSI. Unless noted otherwise, top chord shall have properly attached structural sheathing and bottom chord shall have a properly attached rigid ceiling. Locations shown for permanent lateral restraint of webs shall have bracing installed per BCSI sections B3, B7 or B10, as applicable.

ITW Building Components Group Inc. (ITWBCG) shall not be responsible for any deviation from this design, any failure to build the truss in conformance with ANSI/TPI 1, or for handling, shipping, installation and bracing of trusses. Apply plates to each face of truss and position as shown above and on the Joint Details, unless noted otherwise. Refer to drawings 160A-Z for standard plate positions. A seal on this drawing or cover page listing this drawing, indicates acceptance of professional engineering responsibility solely for the design shown. The suitability and use of this design for any structure is the responsibility of the Building Designer per ANSI/TPI 1 Sec.2. For more information see: This job's general notes page; ITW-BCG: www.itwbcg.com; TPI: www.tpinst.org; WTCA: www.sbcindustry.com; ICC: www.iccsafe.org

TC LL	20.0 PSF	REF	R9114- 87246
TC DL	10.0 PSF	DATE	12/19/12
BC DL	10.0 PSF	DRW	HCUSR9114 12354161
BC LL	0.0 PSF	HC-ENG	SSB/WPF
TOT.LD.	40.0 PSF	SEQN-	285644
DUR.FAC.	1.25	FROM	SDY
SPACING	24.0"	JREF-	1US59114Z05

(120912--Anderson Truss Co. -Patel Residence -- Lot 1 Hills Of Windsor , ** - HJ5A)

THIS DWG PREPARED FROM COMPUTER INPUT (LOADS & DIMENSIONS) SUBMITTED BY TRUSS MFR.

Top chord 2x4 SP_#2__12A
Bot chord 2x4 SP_#2__12A
Webs 2x4 SP_#2__12A

Lumber grades designated with "12A" use design values approved 1/5/2012 by ALSC.

Left end vertical not exposed to wind pressure.

120 mph wind, 32.32 ft mean hgt, ASCE 7-10, CLOSED bldg, Located anywhere in roof, RISK CAT II, EXP B, wind TC DL=5.0 psf, wind BC DL=5.0 psf. GCpi(+/-)=0.18

Wind loads and reactions based on MWFRS.

Hipjack supports 5-0-0 setback jacks with no webs.

Deflection meets L/360 live and L/240 total load. Creep increase factor for dead load is 1.50.

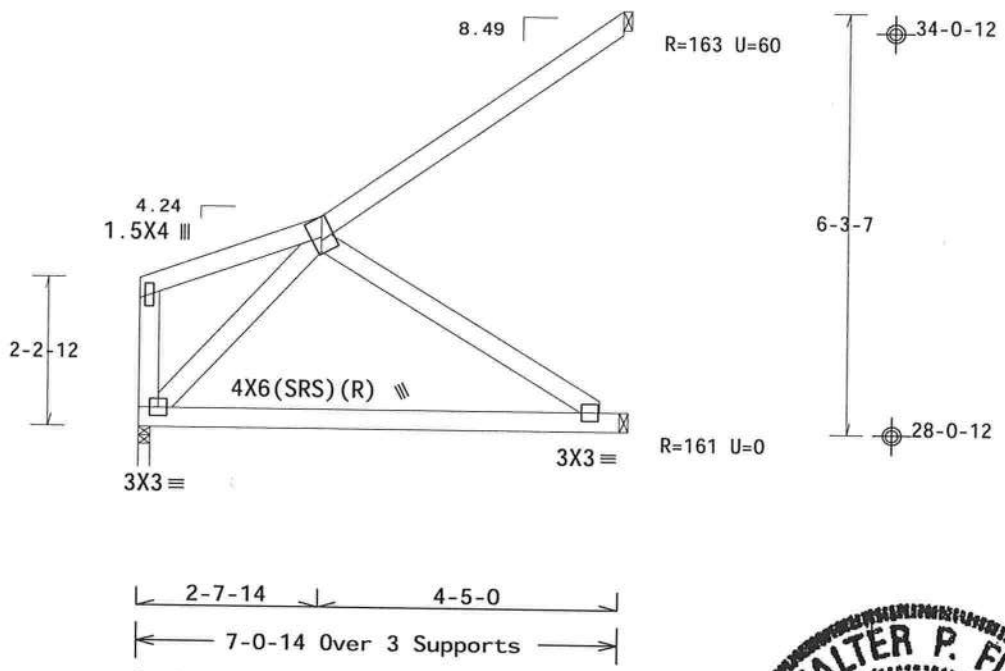

PLT TYP. Wave

Design Crit: FBC2010Res/TPI-2007(STD)
FT/RT=20%(0%)/10(0)

10.03.10.1323.10 QTY 10

WALTER P. FINN LICENSE No. 22839 STATE OF FLORIDA PROFESSIONAL ENGINEER

12/19/2012

FL/-/5/-/-/R/- Scale =.375"/Ft.

TC LL	20.0 PSF	REF	R9114- 87247
TC DL	10.0 PSF	DATE	12/19/12
BC DL	10.0 PSF	DRW	HCUSR9114 12354162
BC LL	0.0 PSF	HC-ENG	SSB/WPF
TOT.LD.	40.0 PSF	SEQN-	285645
DUR.FAC.	1.25	FROM	SDY
SPACING	24.0"	JREF-	1US59114Z05

ALPINE
ITW Building Components Group Inc.
Haines City, FL 33844
FL COA #0 278

WARNING READ AND FOLLOW ALL NOTES ON THIS SHEET!
IMPORTANT FURNISH THIS DESIGN TO ALL CONTRACTORS INCLUDING INSTALLERS.

Trusses require extreme care in fabricating, handling, shipping, installing and bracing. Refer to and follow the latest edition of BCSI (Building Component Safety Information, by TPI and WTCA) for standard practices prior to performing these functions. Installers shall provide temporary bracing per BCSI. Unless noted otherwise, top chord shall have properly attached structural sheathing and bottom chord shall have a properly attached rigid ceiling. Locations shown for permanent lateral restraint of webs shall have bracing installed per BCSI sections B3, B7 or B10, as applicable.

ITW Building Components Group Inc. (ITWBCG) shall not be responsible for any deviation from this design, any failure to build the truss in conformance with ANSI/TPI 1, or for handling, shipping, installation & bracing of trusses. Apply plates to each face of truss and position as shown above and on the Joint Details, unless noted otherwise. Refer to drawings 160A-Z for standard plate positions. A seal on this drawing or cover page listing this drawing, indicates acceptance of professional engineering responsibility solely for the design shown. The suitability and use of this design for any structure is the responsibility of the Building Designer per ANSI/TPI 1 Sec.2. For more information see: This job's general notes page; ITW-BCG: www.itwbcg.com; TPI: www.tpinst.org; WTCA: www.sbcindustry.com; ICC: www.iccsafe.org

(120912--Anderson Truss Co. -Patel Residence -- Lot 1 Hills Of Windsor , ** - HJ6)

THIS DWG PREPARED FROM COMPUTER INPUT (LOADS & DIMENSIONS) SUBMITTED BY TRUSS MFR.

Top chord 2x4 SP_#2__12A
Bot chord 2x4 SP_#2__12A
Webs 2x4 SP_#2__12A

Lumber grades designated with "12A" use design values approved 1/5/2012 by ALSC.

Left end vertical not exposed to wind pressure.

120 mph wind, 29.63 ft mean hgt, ASCE 7-10, CLOSED bldg, Located anywhere in roof, RISK CAT II, EXP B, wind TC DL=5.0 psf, wind BC DL=5.0 psf. GCpi(+/-)=0.18

Wind loads and reactions based on MWFRS.

Hipjack supports 3-8-2 setback jacks with no webs.

Deflection meets L/360 live and L/240 total load. Creep increase factor for dead load is 1.50.

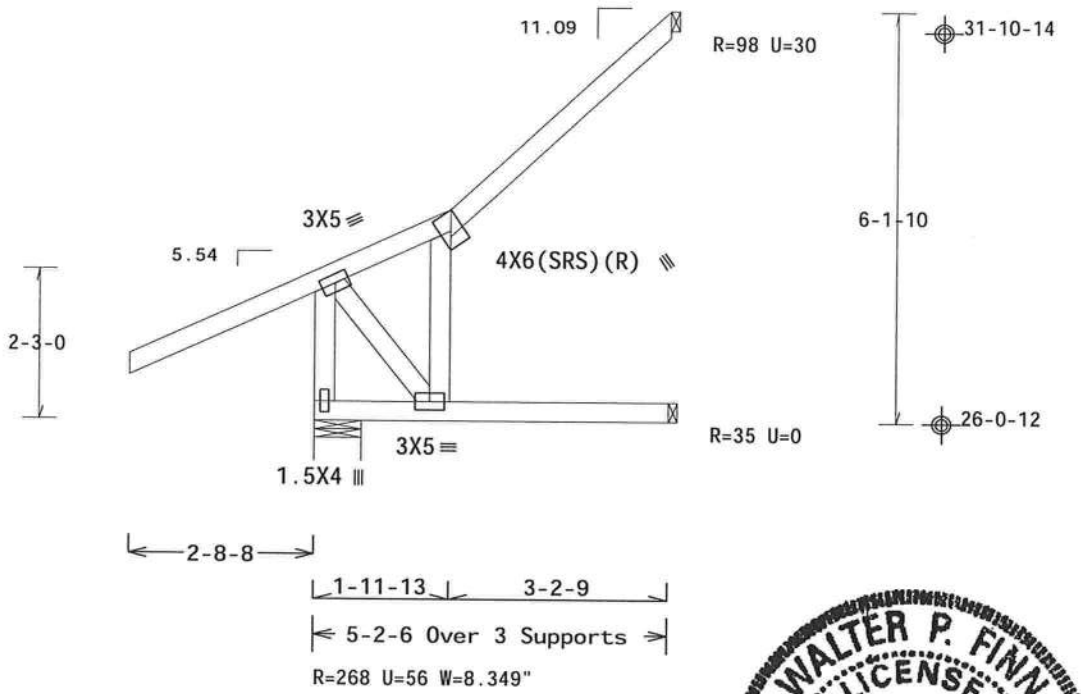

Design Crit: FBC2010Res/TPI-2007(STD)
FT/RT=20%(0%)/10(0)

PLT TYP. Wave

WALTER P. FINN LICENSE No.22839 STATE OF FLORIDA PROFESSIONAL ENGINEER

12/19/2012

FL/-/5/-/-/R/- Scale =.375"/Ft.

TC LL	20.0 PSF	REF	R9114- 87248
TC DL	10.0 PSF	DATE	12/19/12
BC DL	10.0 PSF	DRW	HCUSR9114 12354163
BC LL	0.0 PSF	HC-ENG	SSB/WPF
TOT.LD.	40.0 PSF	SEQN-	285646
DUR.FAC.	1.25	FROM	SDY
SPACING	24.0"	JREF-	1US59114Z05

ALPINE
ITW Building Components Group Inc.
Haines City, FL 33844
FL COA #0 278

WARNING READ AND FOLLOW ALL NOTES ON THIS SHEET!
IMPORTANT FURNISH THIS DESIGN TO ALL CONTRACTORS INCLUDING INSTALLERS.

Trusses require extreme care in fabricating, handling, shipping, installing and bracing. Refer to and follow the latest edition of BCSI (Building Component Safety Information, by TPI and WTCA) for general practices prior to performing these functions. Installers shall provide temporary bracing per BCSI. Unless noted otherwise, top chord shall have properly attached structural sheathing and bottom chord shall have a properly attached rigid ceiling. Locations shown for permanent lateral restraint of webs shall have bracing installed per BCSI sections B3, B7 or B10, as applicable.

ITW Building Components Group Inc. (ITWBCG) shall not be responsible for any deviation from this design, any failure to build the truss in conformance with ANSI/TPI 1, or for handling, shipping, installation & bracing of trusses. Apply plates to each face of truss and position as shown above and on the Joint Details, unless noted otherwise. Refer to drawings 160A-Z for standard plate positions. A seal on this drawing or cover page listing this drawing, indicates acceptance of professional engineering responsibility solely for the design shown. The suitability and use of this design for any structure is the responsibility of the Building Designer per ANSI/TPI 1 Sec.2. For more information see: This job's general notes page; ITW-BCG: www.itwbcg.com; TPI: www.tpinst.org; WTCA: www.sbcindustry.com; ICC: www.iccsafe.org

THIS DWG PREPARED FROM COMPUTER INPUT (LOADS & DIMENSIONS) SUBMITTED BY TRUSS MFR.

(120912--Anderson Truss Co. -Patel Residence -- Lot 1 Hills Of Windsor , ** - HJ7)

Top chord 2x6 SP_#1_Dense_12A :T2 2x4 SP_#1_Dense_12A:
Bot chord 2x4 SP_#2__12A
Webs 2x4 SP_#2__12A

Lumber grades designated with "12A" use design values approved 1/5/2012 by ALSC.

Left end vertical not exposed to wind pressure.

120 mph wind, 26.71 ft mean hgt, ASCE 7-10, CLOSED bldg, Located anywhere in roof, RISK CAT II, EXP B, wind TC DL=5.0 psf, wind BC DL=5.0 psf. GCpi(+/-)=0.18

Wind loads and reactions based on MWFRS.

Hipjack supports 6-11-8 setback jacks with no webs.

Deflection meets L/360 live and L/240 total load. Creep increase factor for dead load is 1.50.

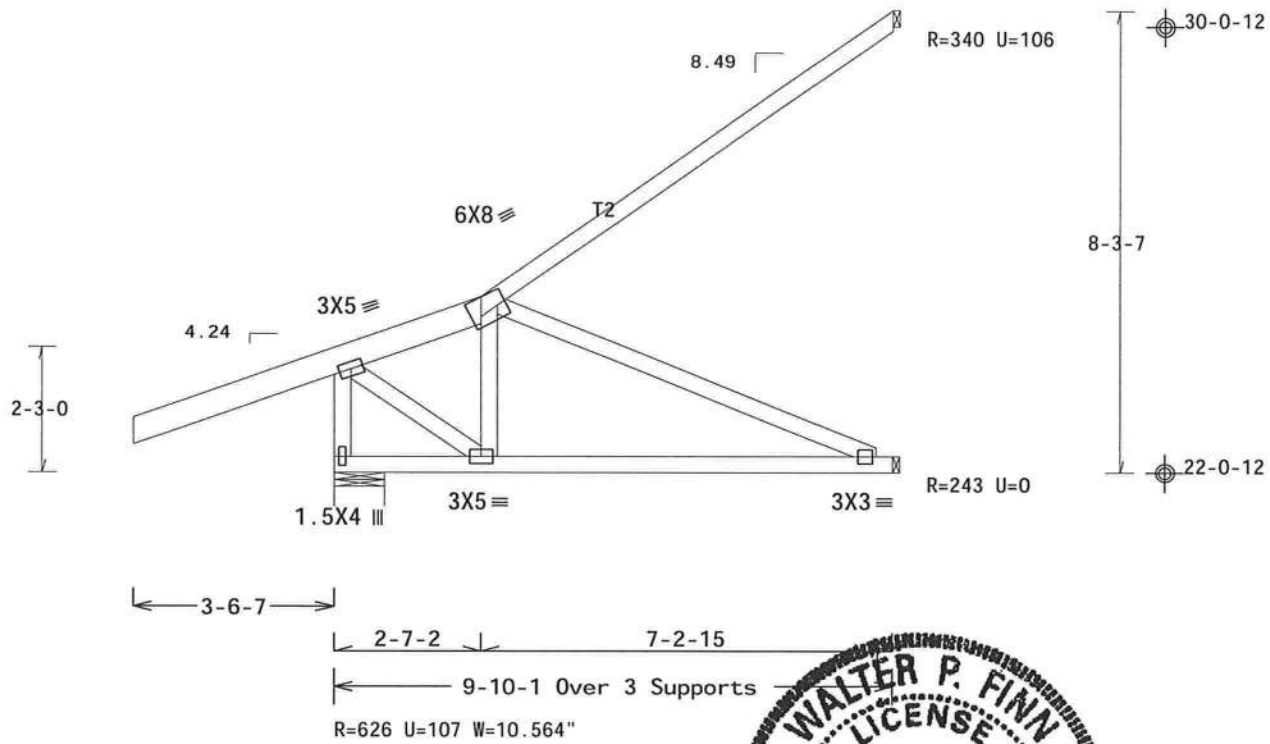

Design Crit: FBC2010Res/TPI-2007(STD)
FT/RT=20%(0%)/10(0)

PLT TYP. Wave

0: 03 19 13 3.70 QT: 1 FL/-/5/-/-/R/- Scale =.3125"/Ft.

WALTER P. FINN LICENSE No.22839 STATE OF FLORIDA PROFESSIONAL ENGINEER

12/19/2012

ALPINE
ITW Building Components Group Inc.
Haines City, FL 33844
FL COA #0 278

WARNING READ AND FOLLOW ALL NOTES ON THIS SHEET!
IMPORTANT FURNISH THIS DESIGN TO ALL CONTRACTORS INCLUDING INSTALLERS.

Trusses require extreme care in fabricating, handling, shipping, installing and bracing. Refer to and follow the latest edition of BCSI (Building Component Safety Information, by TPI and WTCA) for standard practices prior to performing these functions. Installers shall provide temporary bracing per BCSI. Unless noted otherwise, top chord shall have properly attached structural sheathing and bottom chord shall have a properly attached rigid ceiling. Locations shown for permanent lateral restraint of webs shall have bracing installed per BCSI sections B3, B7 or B10, as applicable.

ITW Building Components Group Inc. (ITWBCG) shall not be responsible for any deviation from this design, any failure to build the truss in conformance with ANSI/TPI 1, or for handling, shipping, installation & bracing of trusses. Apply plates to each face of truss and position as shown above and on the Joint Details, unless noted otherwise. Refer to drawings 160A-Z for standard plate positions. A seal on this drawing or cover page listing this drawing, indicates acceptance of professional engineering responsibility solely for the design shown. The suitability and use of this design for any structure is the responsibility of the Building Designer per ANSI/TPI 1 Sec.2. For more information see: This job's general notes page; ITW-BCG: www.itwbcg.com; TPI: www.tpinst.org; WTCA: www.sbcindustry.com; ICC: www.iccsafe.org

TC LL	20.0 PSF	REF	R9114- 87249
TC DL	10.0 PSF	DATE	12/19/12
BC DL	10.0 PSF	DRW	HCUSR9114 12354164
BC LL	0.0 PSF	HC-ENG	SSB/WPF
TOT.LD.	40.0 PSF	SEQN-	285647
DUR.FAC.	1.25	FROM	SDY
SPACING	24.0"	JREF-	1US59114Z05

THIS DWG PREPARED FROM COMPUTER INPUT (LOADS & DIMENSIONS) SUBMITTED BY TRUSS MFR.

(120912--Anderson Truss Co. -Patel Residence -- Lot 1 Hills Of Windsor , ** - HJ8)

Top chord 2x6 SP_#1_Dense_12A :T2 2x4 SP_#2__12A:
Bot chord 2x4 SP_#2__12A
Webs 2x4 SP_#2__12A

Lumber grades designated with "12A" use design values approved 1/5/2012 by ALSC.

Left end vertical not exposed to wind pressure.

120 mph wind, 30.22 ft mean hgt, ASCE 7-10, CLOSED bldg, Located anywhere in roof, RISK CAT II, EXP B, wind TC DL=5.0 psf, wind BC DL=5.0 psf. GCpi(+/-)=0.18

Wind loads and reactions based on MWFRS.

Hipjack supports 4-6-14 setback jacks with no webs.

Deflection meets L/360 live and L/240 total load. Creep increase factor for dead load is 1.50.

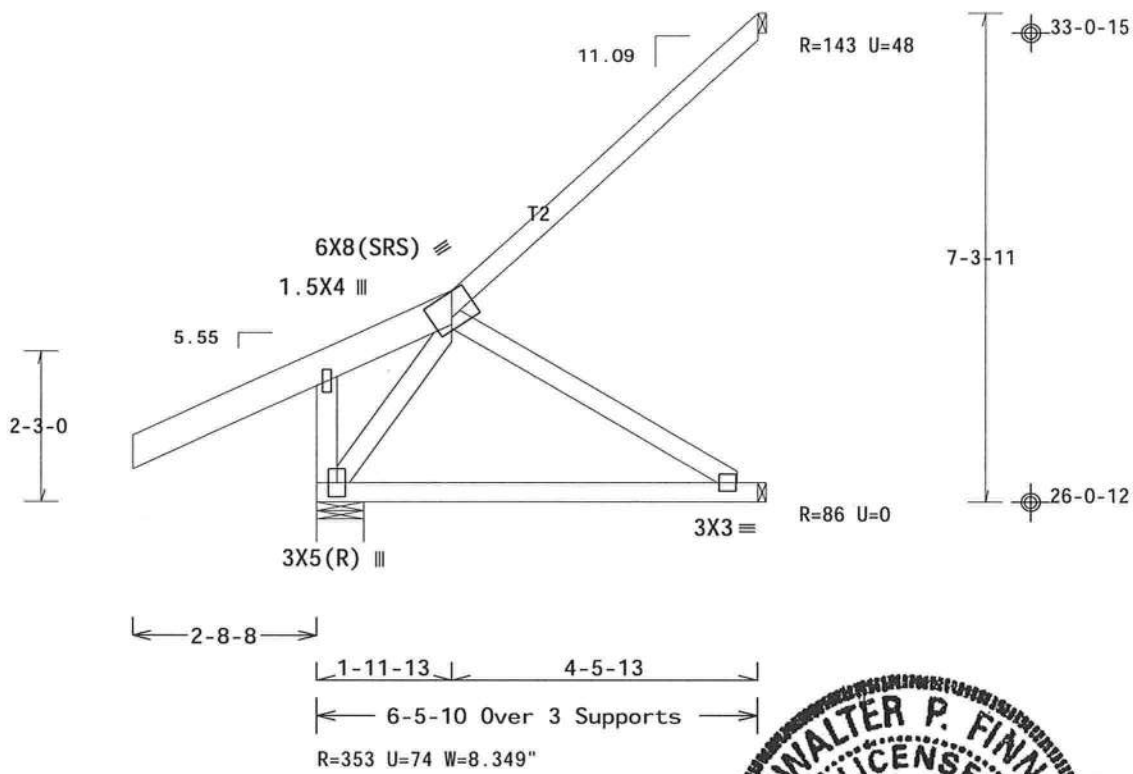

Design Crit: FBC2010Res/TPI-2007(STD)
FT/RT=20%(0%)/10(0)

PLT TYP. Wave

10.03.10 1223.10 QTY:1

FL/-/5/-/-/R/-

Scale =.375"/Ft.

WALTER P. FINN LICENSE No.22839 STATE OF FLORIDA PROFESSIONAL ENGINEER

12/19/2012

ALPINE
ITW Building Components Group Inc.
Haines City, FL 33844
FL COA #0 278

WARNING READ AND FOLLOW ALL NOTES ON THIS SHEET!
IMPORTANT FURNISH THIS DESIGN TO ALL CONTRACTORS INCLUDING INSTALLERS.

Trusses require extreme care in fabricating, handling, shipping, installing and bracing. Refer to and follow the latest edition of BCSI (Building Component Safety Information, by TPI and WTCA) for safety practices prior to performing these functions. Installers shall provide temporary bracing per BCSI. Unless noted otherwise, top chord shall have properly attached structural sheathing and bottom chord shall have a properly attached rigid ceiling. Locations shown for permanent lateral restraint of webs shall have bracing installed per BCSI sections B3, B7 or B10, as applicable.

ITW Building Components Group Inc. (ITWBCG) shall not be responsible for any deviation from this design, any failure to build the truss in conformance with ANSI/TPI 1, or for handling, shipping, installation and bracing of trusses. Apply plates to each face of truss and position as shown above and on the Joint Details, unless noted otherwise. Refer to drawings 160A-Z for standard plate positions. A seal on this drawing or cover page listing this drawing, indicates acceptance of professional engineering responsibility solely for the design shown. The suitability and use of this design for any structure is the responsibility of the Building Designer per ANSI/TPI 1 Sec.2. For more information see: This job's general notes page; ITW-BCG: www.itwbcg.com; TPI: www.tpinst.org; WTCA: www.sbcindustry.com; ICC: www.iccsafe.org

TC LL	20.0 PSF	REF	R9114- 87250
TC DL	10.0 PSF	DATE	12/19/12
BC DL	10.0 PSF	DRW	HCUSR9114 12354165
BC LL	0.0 PSF	HC-ENG	SSB/WPF
TOT.LD.	40.0 PSF	SEQN-	285648
DUR.FAC.	1.25	FROM	SDY
SPACING	24.0"	JREF-	1US59114Z05

THIS DWG PREPARED FROM COMPUTER INPUT (LOADS & DIMENSIONS) SUBMITTED BY TRUSS MFR.

(120912--Anderson Truss Co. -Patel Residence -- Lot 1 Hills Of Windsor , ** - HJ9)

Top chord 2x6 SP_#1_Dense_12A :T2 2x4 SP_#2__12A:
Bot chord 2x4 SP_#2__12A
Webs 2x4 SP_#2__12A

Lumber grades designated with "12A" use design values approved 1/5/2012 by ALSC.

Left end vertical not exposed to wind pressure.

120 mph wind, 30.24 ft mean hgt, ASCE 7-10, CLOSED bldg, Located anywhere in roof, RISK CAT II, EXP B, wind TC DL=5.0 psf, wind BC DL=5.0 psf. GCpi(+/-)=0.18

Wind loads and reactions based on MWFRS.

Hipjack supports 4-7-5 setback jacks with no webs.

Deflection meets L/360 live and L/240 total load. Creep increase factor for dead load is 1.50.

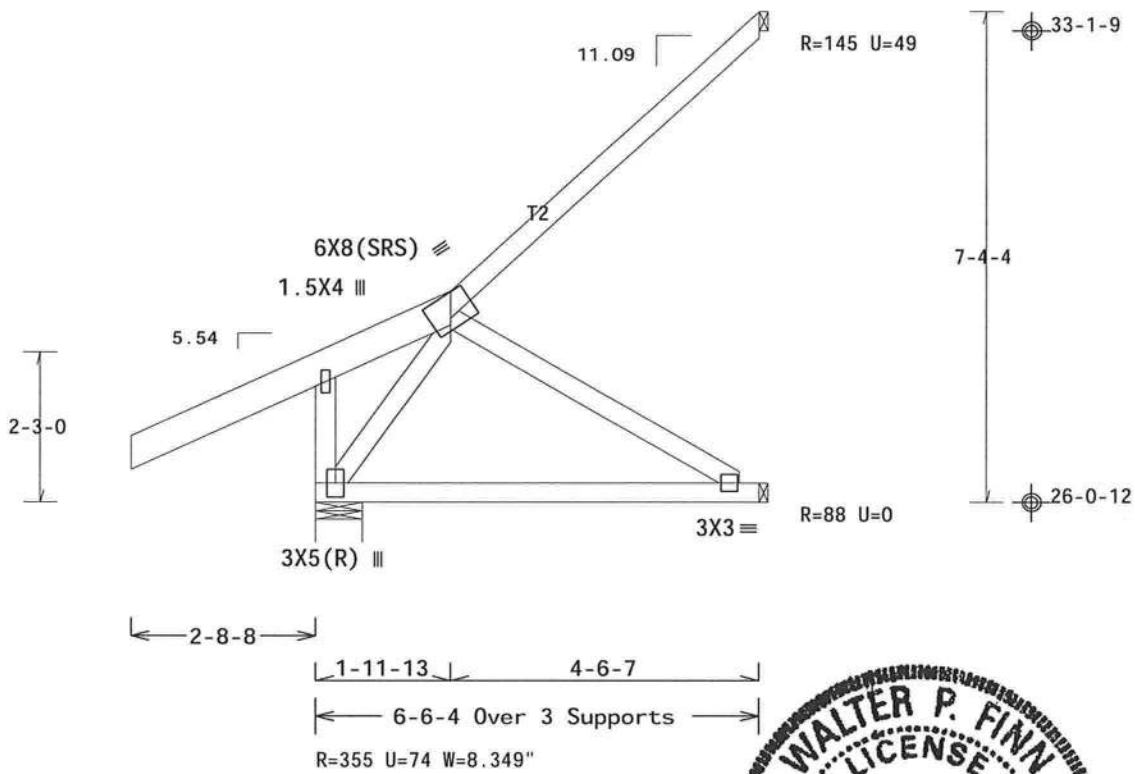

Design Crit: FBC2010Res/TPI-2007(STD)
FT/RT=20%(0%)/10(0)

PLT TYP. Wave

10.03.10.1823.10 DTX:

FL/-/5/-/-/R/-

Scale =.375"/Ft.

WALTER P. FINN LICENSE No.22839 STATE OF FLORIDA PROFESSIONAL ENGINEER

12/19/2012

TC LL	20.0 PSF	REF	R9114- 87251
TC DL	10.0 PSF	DATE	12/19/12
BC DL	10.0 PSF	DRW	HCUSR9114 12354166
BC LL	0.0 PSF	HC-ENG	SSB/WPF
TOT.LD.	40.0 PSF	SEQN-	285649
DUR.FAC.	1.25	FROM	SDY
SPACING	24.0"	JREF-	1US59114Z05

ALPINE
ITW Building Components Group Inc.
Haines City, FL 33844
FL COA #0 278

WARNING READ AND FOLLOW ALL NOTES ON THIS SHEET!
IMPORTANT FURNISH THIS DESIGN TO ALL CONTRACTORS INCLUDING INSTALLERS.

Trusses require extreme care in fabricating, handling, shipping, installing and bracing. Refer to and follow the latest edition of BCSI (Building Component Safety Information, by TPI and WTCA) for safety practices prior to performing these functions. Installers shall provide temporary bracing per BCSI. Unless noted otherwise, top chord shall have properly attached structural sheathing and bottom chord shall have a properly attached rigid ceiling. Locations shown for permanent lateral restraint of webs shall have bracing installed per BCSI sections B3, B7 or B10, as applicable.

ITW Building Components Group Inc. (ITWBCG) shall not be responsible for any deviation from this design, any failure to build the truss in conformance with ANSI/TPI 1, or for handling, shipping, installation & bracing of trusses. Apply plates to each face of truss and position as shown above and on the Joint Details, unless noted otherwise. Refer to drawings 160A-Z for standard plate positions. A seal on this drawing or cover page listing this drawing, indicates acceptance of professional engineering responsibility solely for the design shown. The suitability and use of this design for any structure is the responsibility of the Building Designer per ANSI/TPI 1 Sec.2. For more information see: This job's general notes page; ITW-BCG: www.itwbcg.com; TPI: www.tpinst.org; WTCA: www.sbcindustry.com; ICC: www.iccsafe.org

(120912--Anderson Truss Co. -Patel Residence -- Lot 1 Hills Of Windsor , ** - HJ10)

THIS DWG PREPARED FROM COMPUTER INPUT (LOADS & DIMENSIONS) SUBMITTED BY TRUSS MFR.

Top chord 2x6 SP_#1_Dense_12A :T2 2x4 SP_#2__12A:
Bot chord 2x4 SP_#2__12A
Webs 2x4 SP_#2__12A

Lumber grades designated with "12A" use design values approved 1/5/2012 by ALSC.

Left end vertical not exposed to wind pressure.

120 mph wind, 30.24 ft mean hgt, ASCE 7-10, CLOSED bldg, Located anywhere in roof, RISK CAT II, EXP B, wind TC DL=5.0 psf, wind BC DL=5.0 psf. GCpi(+/-)=0.18

Wind loads and reactions based on MWFRS.

Hipjack supports 4-7-5 setback jacks with no webs.

Deflection meets L/360 live and L/240 total load. Creep increase factor for dead load is 1.50.

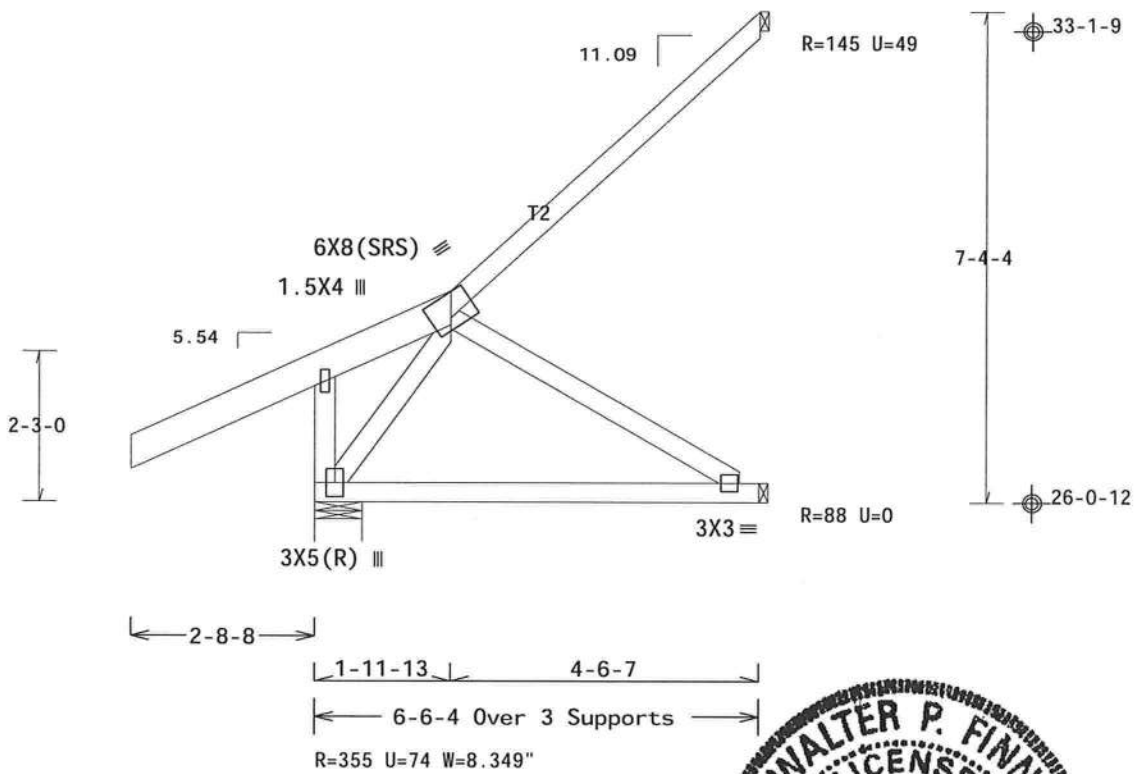

Design Crit: FBC2010Res/TPI-2007(STD)
FT/RT=20%(0%)/10(0) 10.03.10.1223.10 QTY:1

PLT TYP. Wave

FL/-/5/-/-/R/-

Scale =.375"/Ft.

WALTER P. FINN LICENSE No. 22839 STATE OF FLORIDA PROFESSIONAL ENGINEER

12/19/2012

ALPINE
ITW Building Components Group Inc.
Haines City, FL 33844
FL COA #0 278

WARNING READ AND FOLLOW ALL NOTES ON THIS SHEET!
IMPORTANT FURNISH THIS DESIGN TO ALL CONTRACTORS INCLUDING INSTALLERS.

Trusses require extreme care in fabricating, handling, shipping, installing and bracing. Refer to and follow the latest edition of BCSI (Building Component Safety Information, by TPI and WTCA) for safety practices prior to performing these functions. Installers shall provide temporary bracing per BCSI. Unless noted otherwise, top chord shall have properly attached structural sheathing and bottom chord shall have a properly attached rigid ceiling. Locations shown for permanent lateral restraint of webs shall have bracing installed per BCSI sections B3, B7 or B10, as applicable.

ITW Building Components Group Inc. (ITWBCG) shall not be responsible for any deviation from this design, any failure to build the truss in conformance with ANSI/TPI 1, or for handling, shipping, installation and bracing of trusses. Apply plates to each face of truss and position as shown above and on the Joint Details, unless noted otherwise. Refer to drawings 160A-Z for standard plate positions. A seal on this drawing or cover page listing this drawing, indicates acceptance of professional engineering responsibility solely for the design shown. The suitability and use of this design for any structure is the responsibility of the Building Designer per ANSI/TPI 1 Sec.2. For more information see: This job's general notes page; ITW-BCG: www.itwbcg.com; TPI: www.tpinst.org; WTCA: www.sbcindustry.com; ICC: www.iccsafe.org

TC LL	20.0 PSF	REF	R9114- 87252
TC DL	10.0 PSF	DATE	12/19/12
BC DL	10.0 PSF	DRW	HCUSR9114 12354167
BC LL	0.0 PSF	HC-ENG	SSB/WPF
TOT.LD.	40.0 PSF	SEQN-	285650
DUR.FAC.	1.25	FROM	SDY
SPACING	24.0"	JREF-	1US59114Z05

(120912--Anderson Truss Co. -Patel Residence -- Lot 1 Hills Of Windsor , ** - HJ11)

Top chord 2x6 SP_#1_Dense_12A
Bot chord 2x4 SP_#2__12A
Webs 2x4 SP_#2__12A

Lumber grades designated with "12A" use design values approved 1/5/2012 by ALSC.

Left end vertical not exposed to wind pressure.

120 mph wind, 27.98 ft mean hgt, ASCE 7-10, CLOSED bldg, Located anywhere in roof, RISK CAT II, EXP B, wind TC DL=5.0 psf, wind BC DL=5.0 psf. GCpi(+/-)=0.18

Wind loads and reactions based on MWFRS.

Hipjack supports 0-10-14 setback jacks with no webs.

Deflection meets L/360 live and L/240 total load. Creep increase factor for dead load is 1.50.

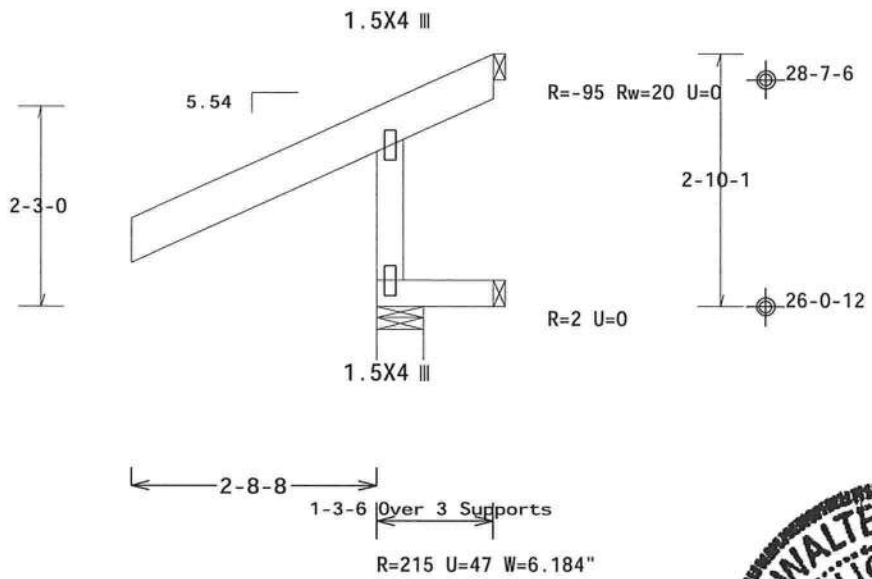

Design Crit: FBC2010Res/TPI-2007(STD)
FT/RT=20%(0%)/10(0) 10.03.10 1223.10 QTY:1

PLT TYP. Wave

FL/-/5/-/-/R/-

Scale =.5"/Ft.

WALTER P. FINN LICENSE No.22839 STATE OF FLORIDA PROFESSIONAL ENGINEER

12/19/2012

ALPINE
ITW Building Components Group Inc.
Haines City, FL 33844
FL COA #0 278

WARNING READ AND FOLLOW ALL NOTES ON THIS SHEET!
IMPORTANT FURNISH THIS DESIGN TO ALL CONTRACTORS INCLUDING INSTALLERS.

Trusses require extreme care in fabricating, handling, shipping, installing and bracing. Refer to and follow the latest edition of BCSI (Building Component Safety Information, by TPI and WTCA) for safety practices prior to performing these functions. Installers shall provide temporary bracing per BCSI. Unless noted otherwise, top chord shall have properly attached structural sheathing and bottom chord shall have a properly attached rigid ceiling. Locations shown for permanent lateral restraint of webs shall have bracing installed per BCSI sections B3, B7 or B10, as applicable.

ITW Building Components Group Inc. (ITWBCG) shall not be responsible for any deviation from this design, any failure to build the truss in conformance with ANSI/TPI 1, or for handling, shipping, installation and bracing of trusses. Apply plates to each face of truss and position as shown above and on the Joint Details, unless noted otherwise. Refer to drawings 160A-Z for standard plate positions. A seal on this drawing or cover page listing this drawing, indicates acceptance of professional engineering responsibility solely for the design shown. The suitability and use of this design for any structure is the responsibility of the Building Designer per ANSI/TPI 1 Sec.2. For more information see: This job's general notes page; ITW-BCG: www.itwbcg.com; TPI: www.tpinst.org; WTCA: www.sbcindustry.com; ICC: www.iccsafe.org

TC LL	20.0 PSF	REF	R9114- 87253
TC DL	10.0 PSF	DATE	12/19/12
BC DL	10.0 PSF	DRW	HCUSR9114 12354168
BC LL	0.0 PSF	HC-ENG	SSB/WPF
TOT.LD.	40.0 PSF	SEQN-	285651
DUR.FAC.	1.25	FROM	SDY
SPACING	24.0"	JREF-	1US59114Z05

THIS DWG PREPARED FROM COMPUTER INPUT (LOADS & DIMENSIONS) SUBMITTED BY TRUSS MFR.

(120912--Anderson Truss Co. -Patel Residence -- Lot 1 Hills Of Windsor , ** - EJ1)

Top chord 2x4 SP_#2__12A
Bot chord 2x4 SP_#2__12A
Webs 2x4 SP_#2__12A

Lumber grades designated with "12A" use design values approved 1/5/2012 by ALSC.

Left end vertical not exposed to wind pressure.

Deflection meets L/360 live and L/240 total load. Creep increase factor for dead load is 1.50.

120 mph wind, 29.06 ft mean hgt, ASCE 7-10, CLOSED bldg, Located anywhere in roof, RISK CAT II, EXP B, wind TC DL=5.0 psf, wind BC DL=5.0 psf. GCpi(+/-)=0.18

Wind loads and reactions based on MWFRS with additional C&C member design.

Bottom chord checked for 10.00 psf non-concurrent live load.

MWFRS loads based on trusses located at least 29.06 ft. from roof edge.

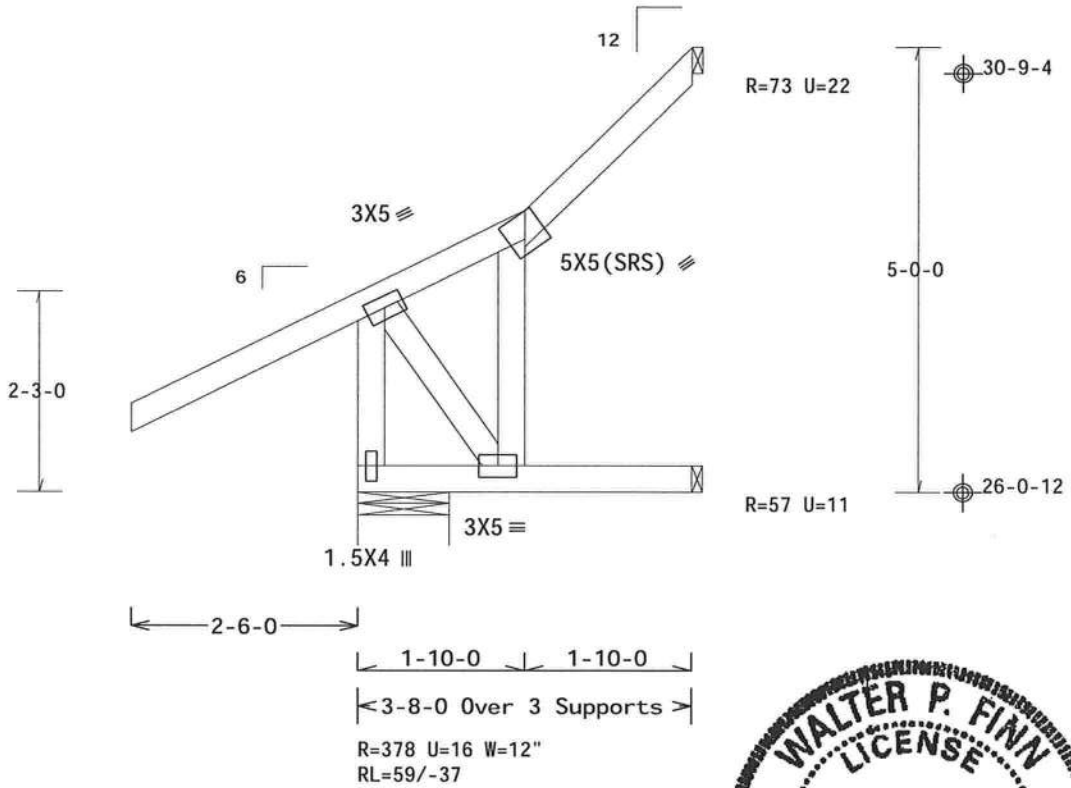

Design Crit: FBC2010Res/TPI-2007(STD)
FT/RT=20%(0%)/10(0)

PLT TYP. Wave

★10.03.10.1323.10 OTV★

FL/-/5/-/-/R/-

Scale =.5"/Ft.

WALTER P. FINN LICENSE No.22839 STATE OF FLORIDA PROFESSIONAL ENGINEER

12/19/2012

ALPINE
ITW Building Components Group Inc.
Haines City, FL 33844
FL COA #0 278

WARNING READ AND FOLLOW ALL NOTES ON THIS SHEET!
IMPORTANT FURNISH THIS DESIGN TO ALL CONTRACTORS INCLUDING INSTALLERS.

Trusses require extreme care in fabricating, handling, shipping, installing and bracing. Refer to and follow the latest edition of BCSI (Building Component Safety Information, by TPI and WTCA) for general guidelines practices prior to performing these functions. Installers shall provide temporary bracing per BCSI. Unless noted otherwise, top chord shall have properly attached structural sheathing and bottom chord shall have a properly attached rigid ceiling. Locations shown for permanent lateral restraint of webs shall have bracing installed per BCSI sections B3, B7 or B10, as applicable.

ITW Building Components Group Inc. (ITWBCG) shall not be responsible for any deviation from this design, any failure to build the truss in conformance with ANSI/TPI 1, or for handling, shipping, installation and bracing of trusses. Apply plates to each face of truss and position as shown above and on the Joint Details, unless noted otherwise. Refer to drawings 160A-Z for standard plate positions. A seal on this drawing or cover page listing this drawing, indicates acceptance of professional engineering responsibility solely for the design shown. The suitability and use of this design for any structure is the responsibility of the Building Designer per ANSI/TPI 1 Sec.2. For more information see: This job's general notes page; ITW-BCG: www.itwbcg.com; TPI: www.tpinst.org; WTCA: www.sbcindustry.com; ICC: www.iccsafe.org

TC LL	20.0 PSF	REF	R9114- 87254
TC DL	10.0 PSF	DATE	12/19/12
BC DL	10.0 PSF	DRW	HCUSR9114 12354169
BC LL	0.0 PSF	HC-ENG	SSB/WPF
TOT.LD.	40.0 PSF	SEQN-	285580
DUR.FAC.	1.25	FROM	SDY
SPACING	24.0"	JREF-	1US59114Z05

(120912--Anderson Truss Co. -Patel Residence -- Lot 1 Hills Of Windsor , ** - EJ2)

THIS DWG PREPARED FROM COMPUTER INPUT (LOADS & DIMENSIONS) SUBMITTED BY TRUSS MFR.

Top chord 2x4 SP_#2__12A
Bot chord 2x4 SP_#2__12A
Webs 2x4 SP_#2__12A

Lumber grades designated with "12A" use design values approved 1/5/2012 by ALSC.

Left end vertical not exposed to wind pressure.

Truss passed check for 20 psf additional bottom chord live load in areas with 42"-high x 24"-wide clearance.

Deflection meets L/360 live and L/240 total load. Creep increase factor for dead load is 1.50.

120 mph wind, 30.23 ft mean hgt, ASCE 7-10, CLOSED bldg, Located anywhere in roof, RISK CAT II, EXP B, wind TC DL=5.0 psf, wind BC DL=5.0 psf. GCpi(+/-)=0.18

Wind loads and reactions based on MWFRS with additional C&C member design.

Calculated horizontal deflection is 0.13" due to live load and 0.15" due to dead load.

Bottom chord checked for 10.00 psf non-concurrent live load.

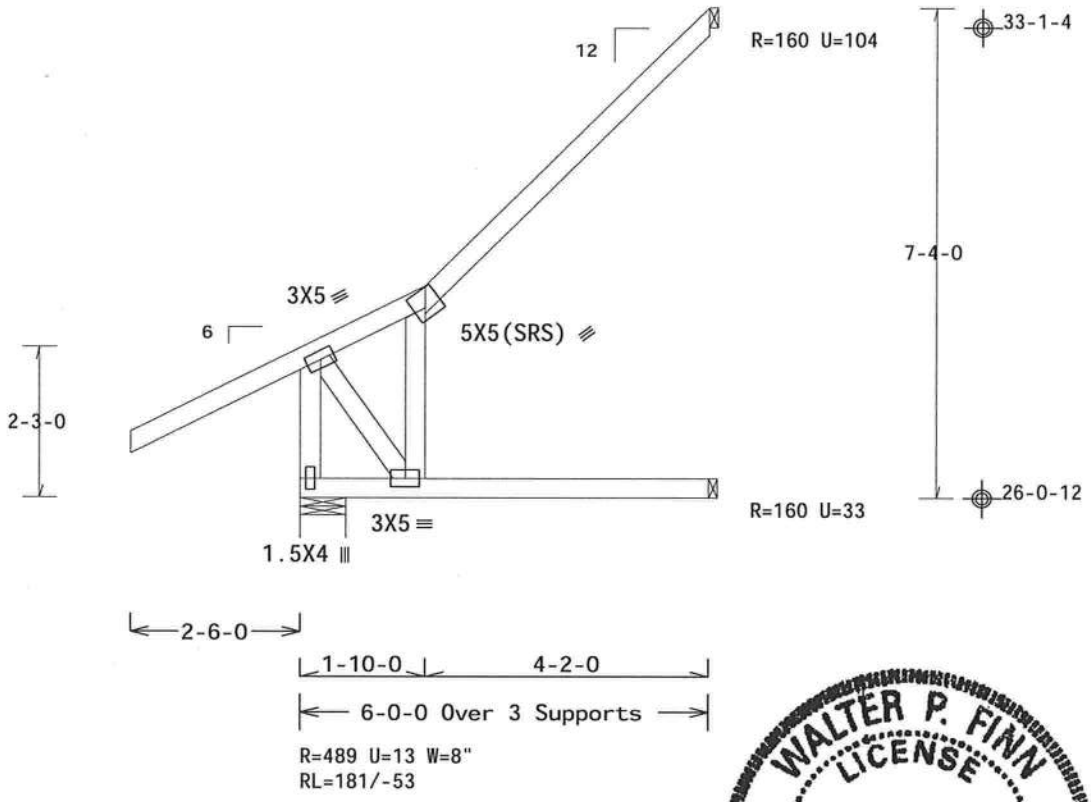

R=489 U=13 W=8"
RL=181/-53

Design Crit: FBC2010Res/TPI-2007(STD)
FT/RT=20%(0%)/10(0) ★10.03.10.1223.10 QTY 3

PLT TYP. Wave

FL/-/5/-/-/R/-

Scale =.375"/Ft.

WALTER P. FINN LICENSE No.22839 STATE OF FLORIDA PROFESSIONAL ENGINEER

12/19/2012

ALPINE
ITW Building Components Group Inc.
Haines City, FL 33844
FL COA #0 278

WARNING READ AND FOLLOW ALL NOTES ON THIS SHEET!
IMPORTANT FURNISH THIS DESIGN TO ALL CONTRACTORS INCLUDING INSTALLERS.

Trusses require extreme care in fabricating, handling, shipping, installing and bracing. Refer to and follow the latest edition of BCSI (Building Component Safety Information, by TPI and WTCA) for safety practices prior to performing these functions. Installers shall provide temporary bracing per BCSI. Unless noted otherwise, top chord shall have properly attached structural sheathing and bottom chord shall have a properly attached rigid ceiling. Locations shown for permanent lateral restraint of webs shall have bracing installed per BCSI sections B3, B7 or B10, as applicable.

ITW Building Components Group Inc. (ITWBCG) shall not be responsible for any deviation from this design, any failure to build the truss in conformance with ANSI/TPI 1, or for handling, shipping, installation and bracing of trusses. Apply plates to each face of truss and position as shown above and on the Joint Details, unless noted otherwise. Refer to drawings 160A-Z for standard plate positions. A seal on this drawing or cover page listing this drawing, indicates acceptance of professional engineering responsibility solely for the design shown. The suitability and use of this design for any structure is the responsibility of the Building Designer per ANSI/TPI 1 Sec.2. For more information see: This job's general notes page; ITW-BCG: www.itwbcg.com; TPI: www.tpinst.org; WTCA: www.sbcindustry.com; ICC: www.iccsafe.org

TC LL	20.0 PSF	REF	R9114- 87255
TC DL	10.0 PSF	DATE	12/19/12
BC DL	10.0 PSF	DRW	HCUSR9114 12354170
BC LL	0.0 PSF	HC-ENG	SSB/WPF
TOT.LD.	40.0 PSF	SEQN-	285581
DUR.FAC.	1.25	FROM	SDY
SPACING	24.0"	JREF-	1US59114Z05

(120912--Anderson Truss Co. -Patel Residence -- Lot 1 Hills Of Windsor , ** - EJ3)

THIS DWG PREPARED FROM COMPUTER INPUT (LOADS & DIMENSIONS) SUBMITTED BY TRUSS MFR.

Top chord 2x4 SP_#2__12A
Bot chord 2x4 SP_#2__12A
Webs 2x4 SP_#2__12A

Lumber grades designated with "12A" use design values approved 1/5/2012 by ALSC.

Left end vertical not exposed to wind pressure.

Deflection meets L/360 live and L/240 total load. Creep increase factor for dead load is 1.50.

120 mph wind, 31.11 ft mean hgt, ASCE 7-10, CLOSED bldg, Located anywhere in roof, RISK CAT II, EXP B, wind TC DL=5.0 psf, wind BC DL=5.0 psf. GCpi(+/-)=0.18

Wind loads and reactions based on MWFRS with additional C&C member design.

Bottom chord checked for 10.00 psf non-concurrent live load.

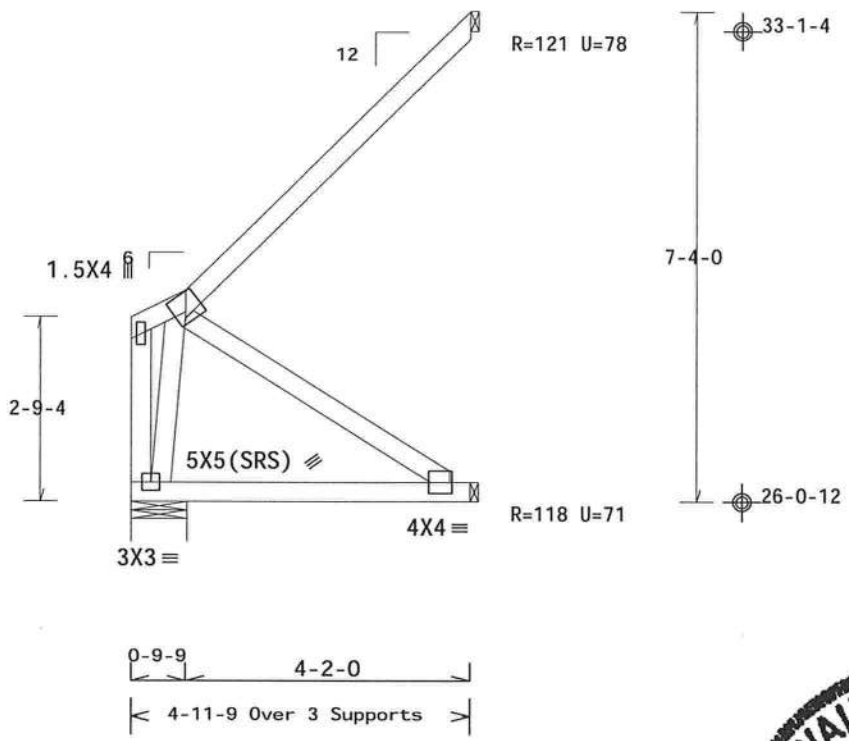

Design Crit: FBC2010Res/TPI-2007(STD)
FT/RT=20%(0%)/10(0)

PLT TYP. Wave

0.03 10.1283.10 OTH:

FL/-/5/-/-/R/-

Scale =.375"/Ft.

ALPINE
ITW Building Components Group Inc.
Haines City, FL 33844
FL COA #0 278

WARNING READ AND FOLLOW ALL NOTES ON THIS SHEET!
IMPORTANT FURNISH THIS DESIGN TO ALL CONTRACTORS INCLUDING INSTALLERS.

Trusses require extreme care in fabricating, handling, shipping, installing and bracing. Refer to and follow the latest edition of BCSI (Building Component Safety Information, by TPI and WTCA) for standard practices prior to performing these functions. Installers shall provide temporary bracing per BCSI. Unless noted otherwise, top chord shall have properly attached structural sheathing and bottom chord shall have a properly attached rigid ceiling. Locations shown for permanent lateral restraint of webs shall have bracing installed per BCSI sections B3, B7 or B10, as applicable.

ITW Building Components Group Inc. (ITWBCG) shall not be responsible for any deviation from this design, any failure to build the truss in conformance with ANSI/TPI 1, or for handling, shipping, installation & bracing of trusses. Apply plates to each face of truss and position as shown above and on the Joint Details, unless noted otherwise. Refer to drawings 160A-Z for standard plate positions. A seal on this drawing or cover page listing this drawing, indicates acceptance of professional engineering responsibility solely for the design shown. The suitability and use of this design for any structure is the responsibility of the Building Designer per ANSI/TPI 1 Sec.2. For more information see: This job's general notes page; ITW-BCG: www.itwbcg.com; TPI: www.tpinst.org; WTCA: www.sbcindustry.com; ICC: www.iccsafe.org

WALTER P. FINN
LICENSE
No.22839
STATE OF FLORIDA
PROFESSIONAL ENGINEER
12/19/2012

TC LL	20.0 PSF	REF	R9114- 87256
TC DL	10.0 PSF	DATE	12/19/12
BC DL	10.0 PSF	DRW	HCUSR9114 12354171
BC LL	0.0 PSF	HC-ENG	SSB/WPF
TOT.LD.	40.0 PSF	SEQN-	285582
DUR.FAC.	1.25	FROM	SDY
SPACING	24.0"	JREF-	1US59114Z05

(120912--Anderson Truss Co. -Patel Residence -- Lot 1 Hills Of Windsor , ** - EJ4)

THIS DWG PREPARED FROM COMPUTER INPUT (LOADS & DIMENSIONS) SUBMITTED BY TRUSS MFR.

Top chord 2x4 SP_#2__12A
Bot chord 2x4 SP_#2__12A
Webs 2x4 SP_#2__12A

Lumber grades designated with "12A" use design values approved 1/5/2012 by ALSC.

Wind loads and reactions based on MWFRS with additional C&C member design.

Left end vertical not exposed to wind pressure.

MWFRS loads based on trusses located at least 15.96 ft. from roof edge.

Special loads
------(Lumber Dur.Fac.=1.25 / Plate Dur.Fac.=1.25)
TC- From 2 plf at 0.00 to 2 plf at 2.96
BC- From 2 plf at 0.00 to 2 plf at 2.96

120 mph wind, 31.91 ft mean hgt, ASCE 7-10, CLOSED bldg, Located anywhere in roof, RISK CAT II, EXP B, wind TC DL=5.0 psf, wind BC DL=5.0 psf. GCpi(+/-)=0.18

Bottom chord checked for 10.00 psf non-concurrent live load.

Deflection meets L/360 live and L/240 total load. Creep increase factor for dead load is 1.50.

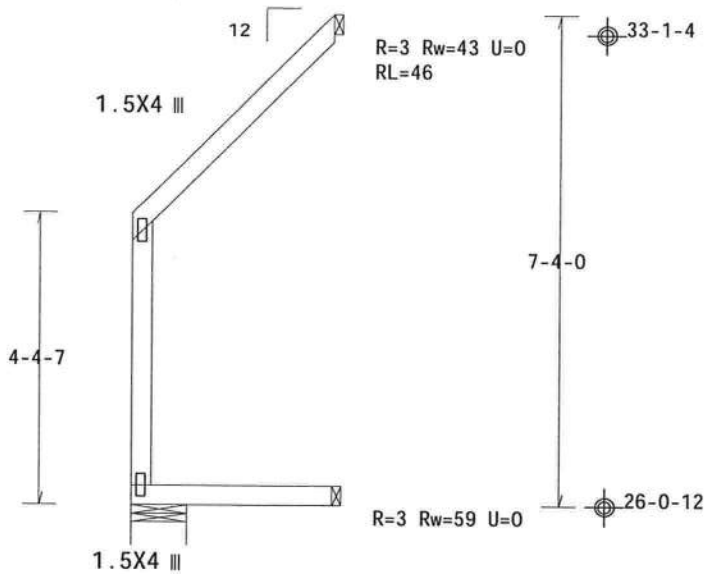

2-11-9 Over 3 Supports

R=6 Rw=101 U=15 W=9.814"

PLT TYP. Wave

Design Crit: FBC2010Res/TPI-2007(STD)
FT/RT=20%(0%)/10(0) 10.03.10 123.10 QTY 1 FL/-/5/-/-/R/- Scale =.375"/Ft.

WALTER P. FINN LICENSE No.22839 STATE OF FLORIDA PROFESSIONAL ENGINEER

12/19/2012

ALPINE
ITW Building Components Group Inc.
Haines City, FL 33844
FL COA #0 278

WARNING READ AND FOLLOW ALL NOTES ON THIS SHEET!
IMPORTANT FURNISH THIS DESIGN TO ALL CONTRACTORS INCLUDING INSTALLERS.

Trusses require extreme care in fabricating, handling, shipping, installing and bracing. Refer to and follow the latest edition of BCSI (Building Component Safety Information, by TPI and WTCA) for safety practices prior to performing these functions. Installers shall provide temporary bracing per BCSI. Unless noted otherwise, top chord shall have properly attached structural sheathing and bottom chord shall have a properly attached rigid ceiling. Locations shown for permanent lateral restraint of webs shall have bracing installed per BCSI sections B3, B7 or B10, as applicable.

ITW Building Components Group Inc. (ITWBCG) shall not be responsible for any deviation from this design, any failure to build the truss in conformance with ANSI/TPI 1, or for handling, shipping, installation and bracing of trusses. Apply plates to each face of truss and position as shown above and on the Joint Details, unless noted otherwise. Refer to drawings 160A-Z for standard plate positions. A seal on this drawing or cover page listing this drawing, indicates acceptance of professional engineering responsibility solely for the design shown. The suitability and use of this design for any structure is the responsibility of the Building Designer per ANSI/TPI 1 Sec.2. For more information see: This job's general notes page; ITW-BCG: www.itwbcg.com; TPI: www.tpinst.org; WTCA: www.sbcindustry.com; ICC: www.iccsafe.org

TC LL	20.0 PSF	REF	R9114- 87257
TC DL	10.0 PSF	DATE	12/19/12
BC DL	10.0 PSF	DRW	HCUSR9114 12354172
BC LL	0.0 PSF	HC-ENG	SSB/WPF
TOT.LD.	40.0 PSF	SEQN-	285583
DUR.FAC.	1.25	FROM	SDY
SPACING	24.0"	JREF-	1US59114Z05

(120912--Anderson Truss Co. -Patel Residence -- Lot 1 Hills Of Windsor , ** - EJ5)

THIS DWG PREPARED FROM COMPUTER INPUT (LOADS & DIMENSIONS) SUBMITTED BY TRUSS MFR.

Top chord 2x4 SP_#2__12A
Bot chord 2x4 SP_#2__12A
Webs 2x4 SP_#2__12A

Lumber grades designated with "12A" use design values approved 1/5/2012 by ALSC.

Left end vertical not exposed to wind pressure.

Deflection meets L/360 live and L/240 total load. Creep increase factor for dead load is 1.50.

120 mph wind, 31.73 ft mean hgt, ASCE 7-10, CLOSED bldg, not located within 4.50 ft from roof edge, RISK CAT II, EXP B, wind TC DL=5.0 psf, wind BC DL=5.0 psf. GCpi(+/-)=0.18

Wind loads and reactions based on MWFRS with additional C&C member design.

Bottom chord checked for 10.00 psf non-concurrent live load.

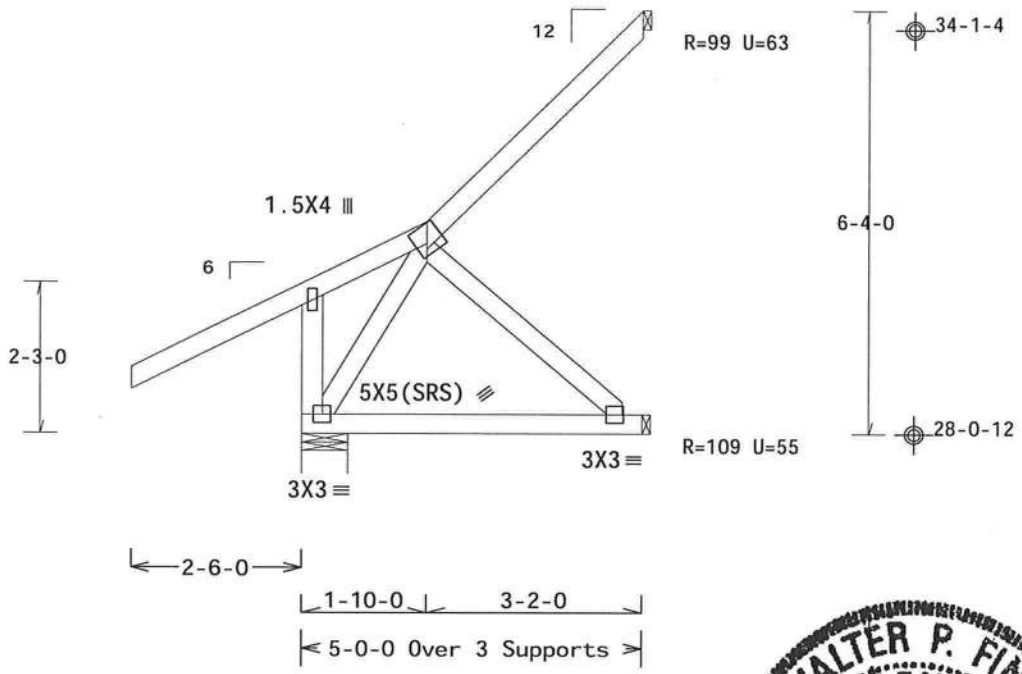

R=421 U=22 W=8"
RL=154/-47

Design Crit: FBC2010Res/TPI-2007(STD)
FT/RT=20%(0%)/10(0)

PLT TYP. Wave

10.03.10.1323.10 QTY:

FL/-/5/-/-/R/-

Scale =.375"/Ft.

WALTER P. FINN
LICENSE
No. 22839
STATE OF FLORIDA
PROFESSIONAL ENGINEER

12/19/2012

ALPINE
ITW Building Components Group Inc.
Haines City, FL 33844
FL COA #0 278

WARNING READ AND FOLLOW ALL NOTES ON THIS SHEET!
IMPORTANT FURNISH THIS DESIGN TO ALL CONTRACTORS INCLUDING INSTALLERS.

Trusses require extreme care in fabricating, handling, shipping, installing and bracing. Refer to and follow the latest edition of BCSI (Building Component Safety Information, by TPI and WTCA) for recommended practices prior to performing these functions. Installers shall provide temporary bracing per BCSI. Unless noted otherwise, top chord shall have properly attached structural sheathing and bottom chord shall have a properly attached rigid ceiling. Locations shown for permanent lateral restraint of webs shall have bracing installed per BCSI sections B3, B7 or B10, as applicable.

ITW Building Components Group Inc. (ITWBCG) shall not be responsible for any deviation from this design, any failure to build the truss in conformance with ANSI/TPI 1, or for handling, shipping, installation & bracing of trusses. Apply plates to each face of truss and position as shown above and on the Joint Details, unless noted otherwise. Refer to drawings 160A-Z for standard plate positions. A seal on this drawing or cover page listing this drawing, indicates acceptance of professional engineering responsibility solely for the design shown. The suitability and use of this design for any structure is the responsibility of the Building Designer per ANSI/TPI 1 Sec.2. For more information see: This job's general notes page; ITW-BCG: www.itwbcg.com; TPI: www.tpinst.org; WTCA: www.sbcindustry.com; ICC: www.iccsafe.org

TC LL	20.0 PSF	REF	R9114- 87258
TC DL	10.0 PSF	DATE	12/19/12
BC DL	10.0 PSF	DRW	HCUSR9114 12354173
BC LL	0.0 PSF	HC-ENG	SSB/WPF
TOT.LD.	40.0 PSF	SEQN-	285584
DUR.FAC.	1.25	FROM	SDY
SPACING	24.0"	JREF-	1US59114Z05

THIS DWG PREPARED FROM COMPUTER INPUT (LOADS & DIMENSIONS) SUBMITTED BY TRUSS MFR.

(120912--Anderson Truss Co. -Patel Residence -- Lot 1 Hills Of Windsor , ** - EJ6)

Top chord 2x4 SP_#2__12A
Bot chord 2x4 SP_#2__12A
Webs 2x4 SP_#2__12A

Lumber grades designated with "12A" use design values approved 1/5/2012 by ALSC.

Left end vertical not exposed to wind pressure.

Deflection meets L/360 live and L/240 total load. Creep increase factor for dead load is 1.50.

120 mph wind, 29.42 ft mean hgt, ASCE 7-10, CLOSED bldg, Located anywhere in roof, RISK CAT II, EXP B, wind TC DL=5.0 psf, wind BC DL=5.0 psf. GCpi(+/-)=0.18

Wind loads and reactions based on MWFRS with additional C&C member design.

Bottom chord checked for 10.00 psf non-concurrent live load.

MWFRS loads based on trusses located at least 14.71 ft. from roof edge.

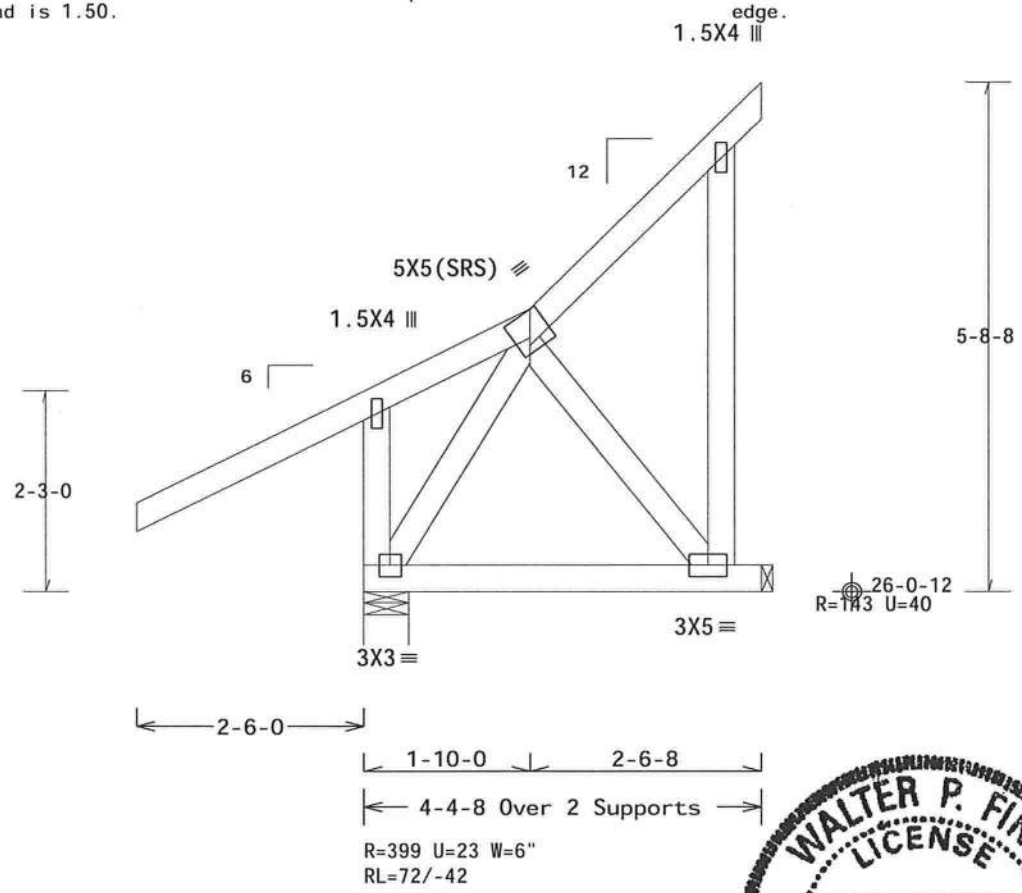

Design Crit: FBC2010Res/TPI-2007(STD)
FT/RT=20%(0%)/10(0)

PLT TYP. Wave

10.03.10.1 23.10 DTX:

FL/-/5/-/-/R/-

Scale =.5"/Ft.

WALTER P. FINN LICENSE No.22839 STATE OF FLORIDA PROFESSIONAL ENGINEER

12/19/2012

TC LL	20.0 PSF	REF	R9114- 87259
TC DL	10.0 PSF	DATE	12/19/12
BC DL	10.0 PSF	DRW	HCUSR9114 12354174
BC LL	0.0 PSF	HC-ENG	SSB/WPF
TOT.LD.	40.0 PSF	SEQN-	285585
DUR.FAC.	1.25	FROM	SDY
SPACING	24.0"	JREF-	1US59114Z05

ALPINE
ITW Building Components Group Inc.
Haines City, FL 33844
FL COA #0 278

WARNING READ AND FOLLOW ALL NOTES ON THIS SHEET!
IMPORTANT FURNISH THIS DESIGN TO ALL CONTRACTORS INCLUDING INSTALLERS.

Trusses require extreme care in fabricating, handling, shipping, installing and bracing. Refer to and follow the latest edition of BCSI (Building Component Safety Information, by TPI and WTCA) for good practices prior to performing these functions. Installers shall provide temporary bracing per BCSI. Unless noted otherwise, top chord shall have properly attached structural sheathing and bottom chord shall have a properly attached rigid ceiling. Locations shown for permanent lateral restraint of webs shall have bracing installed per BCSI sections B3, B7 or B10, as applicable.

ITW Building Components Group Inc. (ITWBCG) shall not be responsible for any deviation from this design, any failure to build the truss in conformance with ANSI/TPI 1, or for handling, shipping, installation & bracing of trusses. Apply plates to each face of truss and position as shown above and on the Joint Details, unless noted otherwise. Refer to drawings 160A-Z for standard plate positions. A seal on this drawing or cover page listing this drawing, indicates acceptance of professional engineering responsibility solely for the design shown. The suitability and use of this design for any structure is the responsibility of the Building Designer per ANSI/TPI 1 Sec.2. For more information see: This job's general notes page; ITW-BCG: www.itwbcg.com; TPI: www.tpinst.org; WTCA: www.sbcindustry.com; ICC: www.iccsafe.org

THIS DWG PREPARED FROM COMPUTER INPUT (LOADS & DIMENSIONS) SUBMITTED BY TRUSS MFR.

(120912--Anderson Truss Co. -Patel Residence -- Lot 1 Hills Of Windsor , ** - EJ7)

Top chord 2x4 SP_#2__12A
Bot chord 2x4 SP_#2__12A
Webs 2x4 SP_#2__12A

Lumber grades designated with "12A" use design values approved 1/5/2012 by ALSC.

Left end vertical not exposed to wind pressure.

Deflection meets L/360 live and L/240 total load. Creep increase factor for dead load is 1.50.

120 mph wind, 26.73 ft mean hgt, ASCE 7-10, CLOSED bldg, Located anywhere in roof, RISK CAT II, EXP B, wind TC DL=5.0 psf, wind BC DL=5.0 psf. GCpi(+/-)=0.18

Wind loads and reactions based on MWFRS with additional C&C member design.

Bottom chord checked for 10.00 psf non-concurrent live load.

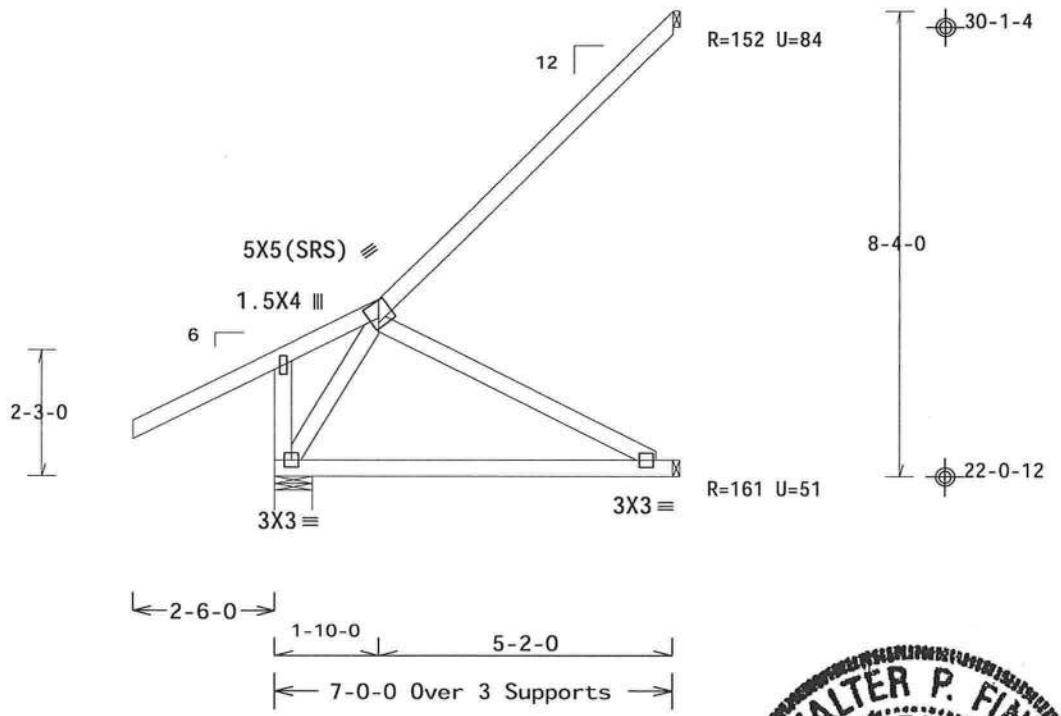

R=496 U=0 W=8"
RL=189/-61

Design Crit: FBC2010Res/TPI-2007(STD)
FT/RT=20%(0%)/10(0) ★16.03.10.1323.10 OTY 28 FL/-/5/-/-/R/-

PLT TYP. Wave

Scale =.3125"/Ft.

WALTER P. FINN LICENSE No.22839 STATE OF FLORIDA PROFESSIONAL ENGINEER

12/19/2012

ALPINE
ITW Building Components Group Inc.
Haines City, FL 33844
FL COA #0 278

WARNING READ AND FOLLOW ALL NOTES ON THIS SHEET!
IMPORTANT FURNISH THIS DESIGN TO ALL CONTRACTORS INCLUDING INSTALLERS.

Trusses require extreme care in fabricating, handling, shipping, installing and bracing. Refer to and follow the latest edition of BCSI (Building Component Safety Information, by TPI and WTCA) for general practices prior to performing these functions. Installers shall provide temporary bracing per BCSI. Unless noted otherwise, top chord shall have properly attached structural sheathing and bottom chord shall have a properly attached rigid ceiling. Locations shown for permanent lateral restraint of webs shall have bracing installed per BCSI sections B3, B7 or B10, as applicable.

ITW Building Components Group Inc. (ITWBCG) shall not be responsible for any deviation from this design, any failure to build the truss in conformance with ANSI/TPI 1, or for handling, shipping, installation and bracing of trusses. Apply plates to each face of truss and position as shown above and on the Joint Details, unless noted otherwise. Refer to drawings 160A-Z for standard plate positions. A seal on this drawing or cover page listing this drawing, indicates acceptance of professional engineering responsibility solely for the design shown. The suitability and use of this design for any structure is the responsibility of the Building Designer per ANSI/TPI 1 Sec.2. For more information see: This job's general notes page; ITW-BCG: www.itwbcg.com; TPI: www.tpinst.org; WTCA: www.sbcindustry.com; ICC: www.iccsafe.org

TC LL	20.0 PSF	REF	R9114- 87260
TC DL	10.0 PSF	DATE	12/19/12
BC DL	10.0 PSF	DRW	HCUSR9114 12354144
BC LL	0.0 PSF	HC-ENG	SSB/WPF
TOT.LD.	40.0 PSF	SEQN-	285586
DUR.FAC.	1.25	FROM	SDY
SPACING	24.0"	JREF-	1US59114Z05

THIS DWG PREPARED FROM COMPUTER INPUT (LOADS & DIMENSIONS) SUBMITTED BY TRUSS MFR.

(120912--Anderson Truss Co. -Patel Residence -- Lot 1 Hills Of Windsor , ** - EJ7A)

Top chord 2x4 SP_#2__12A
Bot chord 2x4 SP_#2__12A
Webs 2x4 SP_#2__12A

Lumber grades designated with "12A" use design values approved 1/5/2012 by ALSC.

Left end vertical not exposed to wind pressure.

Deflection meets L/360 live and L/240 total load. Creep increase factor for dead load is 1.50.

120 mph wind, 31.45 ft mean hgt, ASCE 7-10, CLOSED bldg, Located anywhere in roof, RISK CAT II, EXP B, wind TC DL=5.0 psf, wind BC DL=5.0 psf. GCpi(+/-)=0.18

Wind loads and reactions based on MWFRS with additional C&C member design.

Bottom chord checked for 10.00 psf non-concurrent live load.

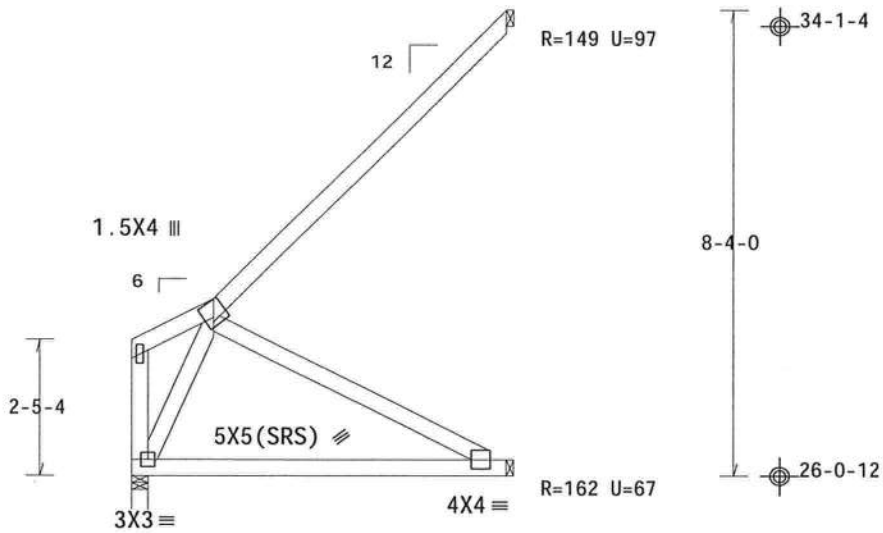

R=285 U=0 W=3.5"
RL=170/-35

Design Crit: FBC2010Res/TPI-2007(STD)
FT/RT=20%(0%)/10(0)

PLT TYP. Wave

10.03.10.1823.10 DTX:

FL/-/5/-/-/R/-

Scale =.3125"/Ft.

WALTER P. FINN LICENSE No.22839 STATE OF FLORIDA PROFESSIONAL ENGINEER

12/19/2012

ALPINE
ITW Building Components Group Inc.
Haines City, FL 33844
FL COA #0 278

WARNING READ AND FOLLOW ALL NOTES ON THIS SHEET!
IMPORTANT FURNISH THIS DESIGN TO ALL CONTRACTORS INCLUDING INSTALLERS.

Trusses require extreme care in fabricating, handling, shipping, installing and bracing. Refer to and follow the latest edition of BCSI (Building Component Safety Information, by TPI and WTCA) for good practices prior to performing these functions. Installers shall provide temporary bracing per BCSI. Unless noted otherwise, top chord shall have properly attached structural sheathing and bottom chord shall have a properly attached rigid ceiling. Locations shown for permanent lateral restraint of webs shall have bracing installed per BCSI sections B3, B7 or B10, as applicable.

ITW Building Components Group Inc. (ITWBCG) shall not be responsible for any deviation from this design, any failure to build the truss in conformance with ANSI/TPI 1, or for handling, shipping, installation & bracing of trusses. Apply plates to each face of truss and position as shown above and on the Joint Details, unless noted otherwise. Refer to drawings 160A-Z for standard plate positions. A seal on this drawing or cover page listing this drawing, indicates acceptance of professional engineering responsibility solely for the design shown. The suitability and use of this design for any structure is the responsibility of the Building Designer per ANSI/TPI 1 Sec.2. For more information see: This job's general notes page; ITW-BCG: www.itwbcg.com; TPI: www.tpinst.org; WTCA: www.sbcindustry.com; ICC: www.iccsafe.org

TC LL	20.0 PSF	REF	R9114- 87261
TC DL	10.0 PSF	DATE	12/19/12
BC DL	10.0 PSF	DRW	HCUSR9114 12354145
BC LL	0.0 PSF	HC-ENG	SSB/WPF
TOT.LD.	40.0 PSF	SEQN-	285587
DUR.FAC.	1.25	FROM	SDY
SPACING	24.0"	JREF-	1US59114Z05

(120912--Anderson Truss Co. -Patel Residence -- Lot 1 Hills Of Windsor , ** - EJ7B)

THIS DWG PREPARED FROM COMPUTER INPUT (LOADS & DIMENSIONS) SUBMITTED BY TRUSS MFR.

Top chord 2x4 SP_#2__12A
Bot chord 2x4 SP_#2__12A
Webs 2x4 SP_#2__12A

Lumber grades designated with "12A" use design values approved 1/5/2012 by ALSC.

Left end vertical not exposed to wind pressure.

Deflection meets L/360 live and L/240 total load. Creep increase factor for dead load is 1.50.

120 mph wind, 17.29 ft mean hgt, ASCE 7-10, CLOSED bldg, Located anywhere in roof, RISK CAT II, EXP B, wind TC DL=5.0 psf, wind BC DL=5.0 psf. GCpi(+/-)=0.18

Wind loads and reactions based on MWFRS with additional C&C member design.

Bottom chord checked for 10.00 psf non-concurrent live load.

MWFRS loads based on trusses located at least 17.29 ft. from roof edge.

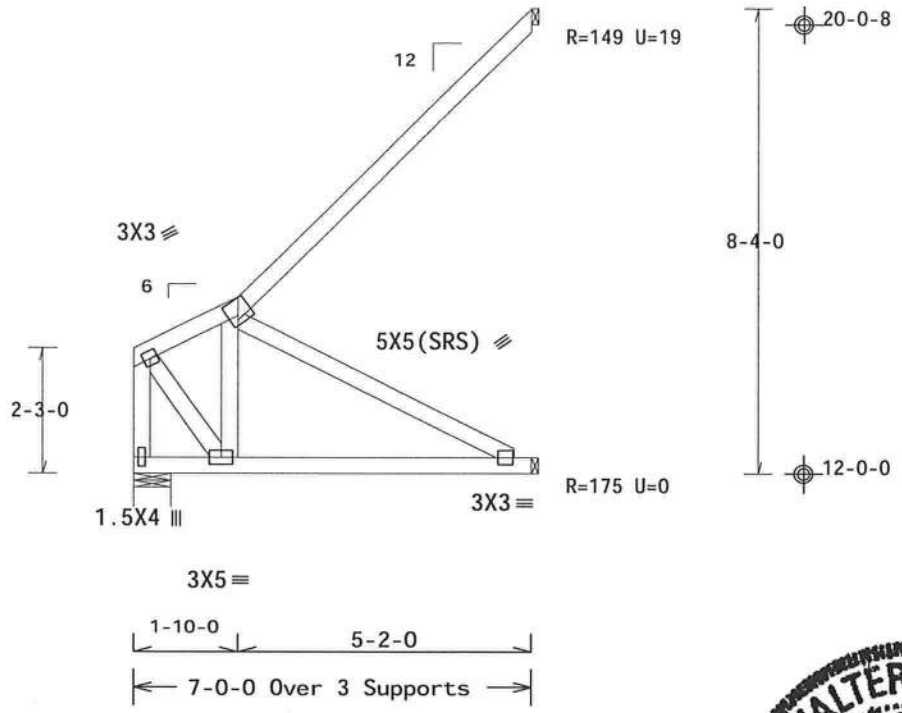

Design Crit: FBC2010Res/TPI-2007(STD)
FT/RT=20%(0%)/10(0)

10.03.10.1323.10 OTV

PLT TYP. Wave

FL/-/5/-/-/R/-

Scale =.3125"/Ft.

WALTER P. FINN LICENSE No.22839 STATE OF FLORIDA PROFESSIONAL ENGINEER

12/19/2012

TC LL	20.0 PSF	REF	R9114- 87262
TC DL	10.0 PSF	DATE	12/19/12
BC DL	10.0 PSF	DRW	HCUSR9114 12354146
BC LL	0.0 PSF	HC-ENG	SSB/WPF
TOT.LD.	40.0 PSF	SEQN-	285659
DUR.FAC.	1.25	FROM	SDY
SPACING	24.0"	JREF-	1US59114Z05

ALPINE
ITW Building Components Group Inc.
Haines City, FL 33844
FL COA #0 278

WARNING READ AND FOLLOW ALL NOTES ON THIS SHEET!
IMPORTANT FURNISH THIS DESIGN TO ALL CONTRACTORS INCLUDING INSTALLERS.

Trusses require extreme care in fabricating, handling, shipping, installing and bracing. Refer to and follow the latest edition of BCSI (Building Component Safety Information, by TPI and WTCA) for general guidelines practices prior to performing these functions. Installers shall provide temporary bracing per BCSI. Unless noted otherwise, top chord shall have properly attached structural sheathing and bottom chord shall have a properly attached rigid ceiling. Locations shown for permanent lateral restraint of webs shall have bracing installed per BCSI sections B3, B7 or B10, as applicable.

ITW Building Components Group Inc. (ITWBCG) shall not be responsible for any deviation from this design, any failure to build the truss in conformance with ANSI/TPI 1, or for handling, shipping, installation and bracing of trusses. Apply plates to each face of truss and position as shown above and on the Joint Details, unless noted otherwise. Refer to drawings 160A-Z for standard plate positions. A seal on this drawing or cover page listing this drawing, indicates acceptance of professional engineering responsibility solely for the design shown. The suitability and use of this design for any structure is the responsibility of the Building Designer per ANSI/TPI 1 Sec.2. For more information see: This job's general notes page; ITW-BCG: www.itwbcg.com; TPI: www.tpinst.org; WTCA: www.sbcindustry.com; ICC: www.iccsafe.org

(120912--Anderson Truss Co. -Patel Residence -- Lot 1 Hills Of Windsor , ** - CJ1)

Top chord 2x4 SP_#2__12A
Bot chord 2x4 SP_#2__12A
Webs 2x4 SP_#2__12A

Lumber grades designated with "12A" use design values approved 1/5/2012 by ALSC.

Left end vertical not exposed to wind pressure.

Bottom chord checked for 10.00 psf non-concurrent live load.

Negative reaction(s) of -177# MAX. (See below) from a non-wind load case requires uplift connection.

120 mph wind, 23.94 ft mean hgt, ASCE 7-10, CLOSED bldg, Located anywhere in roof, RISK CAT II, EXP B, wind TC DL=5.0 psf, wind BC DL=5.0 psf. GCpi(+/-)=0.18

Wind loads and reactions based on MWFRS with additional C&C member design.

Deflection meets L/360 live and L/240 total load. Creep increase factor for dead load is 1.50.

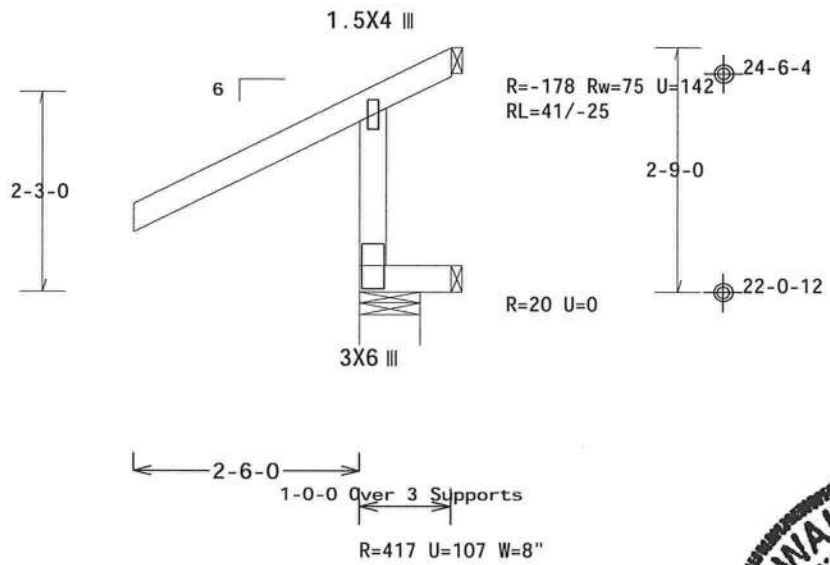

Design Crit: FBC2010Res/TPI-2007(STD)
FT/RT=20%(0%)/10(0) 10.03.10 1223.10 QTY 30 FL/-/5/-/-/R/-

PLT TYP. Wave

Scale =.5"/Ft.

WALTER P. FINN LICENSE No.22839 STATE OF FLORIDA PROFESSIONAL ENGINEER

12/19/2012

ALPINE
ITW Building Components Group Inc.
Haines City, FL 33844
FL COA #0 278

WARNING READ AND FOLLOW ALL NOTES ON THIS SHEET!
IMPORTANT FURNISH THIS DESIGN TO ALL CONTRACTORS INCLUDING INSTALLERS.

Trusses require extreme care in fabricating, handling, shipping, installing and bracing. Refer to and follow the latest edition of BCSI (Building Component Safety Information, by TPI and WTCA) for safety practices prior to performing these functions. Installers shall provide temporary bracing per BCSI. Unless noted otherwise, top chord shall have properly attached structural sheathing and bottom chord shall have a properly attached rigid ceiling. Locations shown for permanent lateral restraint of webs shall have bracing installed per BCSI sections B3, B7 or B10, as applicable.

ITW Building Components Group Inc. (ITWBCG) shall not be responsible for any deviation from this design, any failure to build the truss in conformance with ANSI/TPI 1, or for handling, shipping, installation and bracing of trusses. Apply plates to each face of truss and position as shown above and on the Joint Details, unless noted otherwise. Refer to drawings 160A-Z for standard plate positions. A seal on this drawing or cover page listing this drawing, indicates acceptance of professional engineering responsibility solely for the design shown. The suitability and use of this design for any structure is the responsibility of the Building Designer per ANSI/TPI 1 Sec.2. For more information see: This job's general notes page; ITW-BCG: www.itwbcg.com; TPI: www.tpinst.org; WTCA: www.sbcindustry.com; ICC: www.iccsafe.org

TC LL	20.0 PSF	REF	R9114- 87263
TC DL	10.0 PSF	DATE	12/19/12
BC DL	10.0 PSF	DRW	HCUSR9114 12354101
BC LL	0.0 PSF	HC-ENG	SSB/WPF
TOT.LD.	40.0 PSF	SEQN-	285588
DUR.FAC.	1.25	FROM	SDY
SPACING	24.0"	JREF-	1US59114Z05

(120912--Anderson Truss Co. -Patel Residence -- Lot 1 Hills Of Windsor , ** - CJ1A)

Top chord 2x4 SP_#2__12A
Bot chord 2x4 SP_#2__12A
Webs 2x4 SP_#2__12A

Lumber grades designated with "12A" use design values approved 1/5/2012 by ALSC.

Left end vertical not exposed to wind pressure.

Deflection meets L/360 live and L/240 total load. Creep increase factor for dead load is 1.50.

120 mph wind, 30.56 ft mean hgt, ASCE 7-10, CLOSED bldg, Located anywhere in roof, RISK CAT II, EXP B, wind TC DL=5.0 psf, wind BC DL=5.0 psf. GCpi(+/-)=0.18

Wind loads and reactions based on MWFRS with additional C&C member design.

Bottom chord checked for 10.00 psf non-concurrent live load.

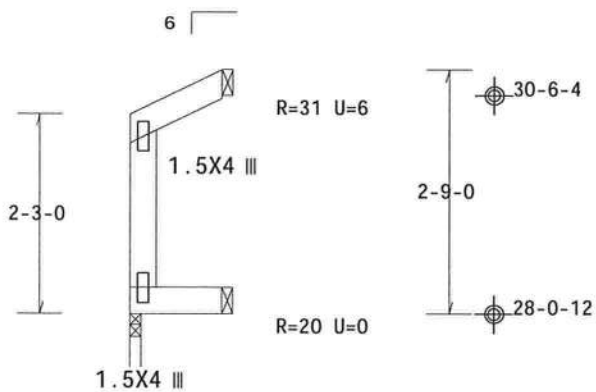

1-0-0 Over 3 Supports

R=41 U=8 W=1.5"(++)

Design Crit: FBC2010Res/TPI-2007(STD)
FT/RT=20%(0%)/10(0)

PLT TYP. Wave

10.03.10.123.10 QTY 12

FL/-/5/-/-/R/-

Scale =.5"/Ft.

WALTER P. FINN LICENSE No.22839 STATE OF FLORIDA PROFESSIONAL ENGINEER

12/19/2012

ALPINE
ITW Building Components Group Inc.
Haines City, FL 33844
FL COA #0 278

WARNING READ AND FOLLOW ALL NOTES ON THIS SHEET!
IMPORTANT FURNISH THIS DESIGN TO ALL CONTRACTORS INCLUDING INSTALLERS.

Trusses require extreme care in fabricating, handling, shipping, installing and bracing. Refer to and follow the latest edition of BCSI (Building Component Safety Information, by TPI and WTCA) for general guidelines practices prior to performing these functions. Installers shall provide temporary bracing per BCSI. Unless noted otherwise, top chord shall have properly attached structural sheathing and bottom chord shall have a properly attached rigid ceiling. Locations shown for permanent lateral restraint of webs shall have bracing installed per BCSI sections B3, B7 or B10, as applicable.

ITW Building Components Group Inc. (ITWBCG) shall not be responsible for any deviation from this design, any failure to build the truss in conformance with ANSI/TPI 1, or for handling, shipping, installation and bracing of trusses. Apply plates to each face of truss and position as shown above and on the Joint Details, unless noted otherwise. Refer to drawings 160A-Z for standard plate positions. A seal on this drawing or cover page listing this drawing, indicates acceptance of professional engineering responsibility solely for the design shown. The suitability and use of this design for any structure is the responsibility of the Building Designer per ANSI/TPI 1 Sec.2. For more information see: This job's general notes page; ITW-BCG: www.itwbcg.com; TPI: www.tpinst.org; WTCA: www.sbcindustry.com; ICC: www.iccsafe.org

TC LL	20.0 PSF	REF	R9114- 87264
TC DL	10.0 PSF	DATE	12/19/12
BC DL	10.0 PSF	DRW	HCUSR9114 12354102
BC LL	0.0 PSF	HC-ENG	SSB/WPF
TOT.LD.	40.0 PSF	SEQN-	285589
DUR.FAC.	1.25	FROM	SDY
SPACING	24.0"	JREF-	1US59114Z05

THIS DWG PREPARED FROM COMPUTER INPUT (LOADS & DIMENSIONS) SUBMITTED BY TRUSS MFR.

(120912--Anderson Truss Co. -Patel Residence -- Lot 1 Hills Of Windsor , ** - CJ2)

Top chord 2x4 SP_#2__12A
Bot chord 2x4 SP_#2__12A
Webs 2x4 SP_#2__12A

Lumber grades designated with "12A" use design values approved 1/5/2012 by ALSC.

Left end vertical not exposed to wind pressure.

Deflection meets L/360 live and L/240 total load. Creep increase factor for dead load is 1.50.

120 mph wind, 28.86 ft mean hgt, ASCE 7-10, CLOSED bldg, Located anywhere in roof, RISK CAT II, EXP B, wind TC DL=5.0 psf, wind BC DL=5.0 psf. GCpi(+/-)=0.18

Wind loads and reactions based on MWFRS with additional C&C member design.

Bottom chord checked for 10.00 psf non-concurrent live load.

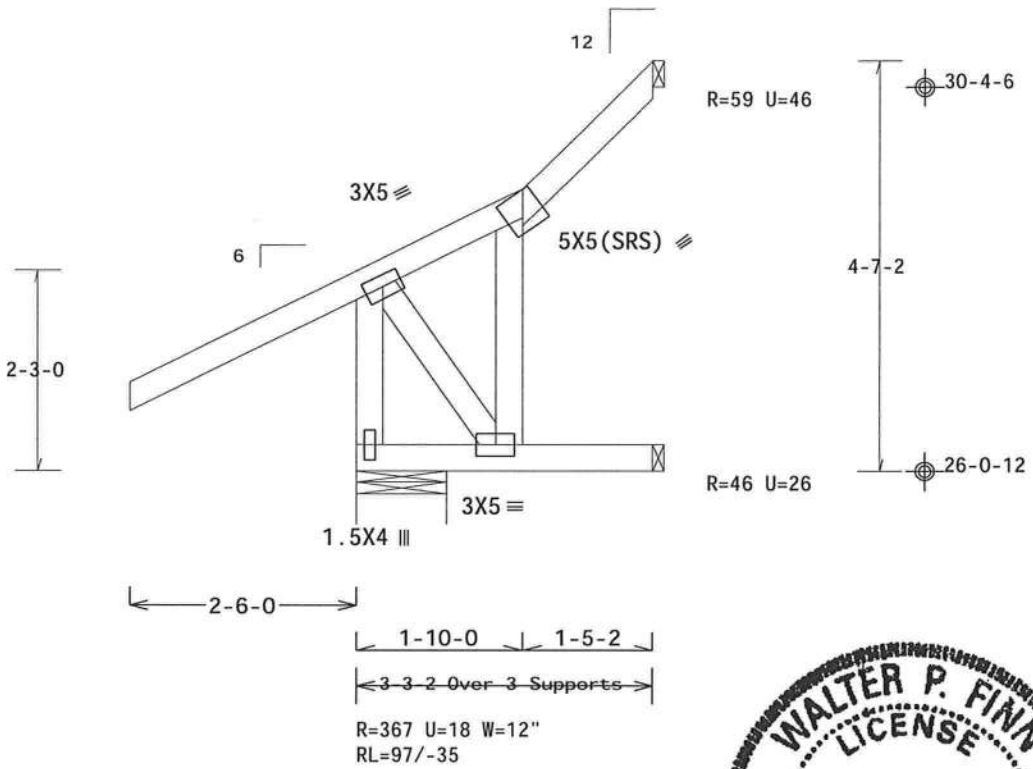

Design Crit: FBC2010Res/TPI-2007(STD)
FT/RT=20%(0%)/10(0)

PLT TYP. Wave

10.03.10 1323.10 QTY 1

FL/-/5/-/-/R/-

Scale =.5"/Ft.

WALTER P. FINN LICENSE No.22839 STATE OF FLORIDA PROFESSIONAL ENGINEER

12/19/2012

TC LL	20.0 PSF	REF R9114- 87265
TC DL	10.0 PSF	DATE 12/19/12
BC DL	10.0 PSF	DRW HCUSR9114 12354103
BC LL	0.0 PSF	HC-ENG SSB/WPF
TOT.LD.	40.0 PSF	SEQN- 285590
DUR.FAC.	1.25	FROM SDY
SPACING	24.0"	JREF- 1US59114Z05

ALPINE
ITW Building Components Group Inc.
Haines City, FL 33844
FL COA #0 278

WARNING READ AND FOLLOW ALL NOTES ON THIS SHEET!
IMPORTANT FURNISH THIS DESIGN TO ALL CONTRACTORS INCLUDING INSTALLERS.

Trusses require extreme care in fabricating, handling, shipping, installing and bracing. Refer to and follow the latest edition of BCSI (Building Component Safety Information, by TPI and WTCA) for safety practices prior to performing these functions. Installers shall provide temporary bracing per BCSI. Unless noted otherwise, top chord shall have properly attached structural sheathing and bottom chord shall have a properly attached rigid ceiling. Locations shown for permanent lateral restraint of webs shall have bracing installed per BCSI sections B3, B7 or B10, as applicable.

ITW Building Components Group Inc. (ITWBCG) shall not be responsible for any deviation from this design, any failure to build the truss in conformance with ANSI/TPI 1, or for handling, shipping, installation and bracing of trusses. Apply plates to each face of truss and position as shown above and on the Joint Details, unless noted otherwise. Refer to drawings 160A-Z for standard plate positions. A seal on this drawing or cover page listing this drawing, indicates acceptance of professional engineering responsibility solely for the design shown. The suitability and use of this design for any structure is the responsibility of the Building Designer per ANSI/TPI 1 Sec.2. For more information see: This job's general notes page; ITW-BCG: www.itwbcg.com; TPI: www.tpinst.org; WTCA: www.sbcindustry.com; ICC: www.iccsafe.org

(120912--Anderson Truss Co. -Patel Residence -- Lot 1 Hills Of Windsor , ** - CJ3)

Top chord 2x4 SP_#2__12A
Bot chord 2x4 SP_#2__12A
Webs 2x4 SP_#2__12A

Lumber grades designated with "12A" use design values approved 1/5/2012 by ALSC.

Left end vertical not exposed to wind pressure.

Deflection meets L/360 live and L/240 total load. Creep increase factor for dead load is 1.50.

120 mph wind, 24.73 ft mean hgt, ASCE 7-10, CLOSED bldg, Located anywhere in roof, RISK CAT II, EXP B, wind TC DL=5.0 psf, wind BC DL=5.0 psf. GCpi(+/-)=0.18

Wind loads and reactions based on MWFRS with additional C&C member design.

Bottom chord checked for 10.00 psf non-concurrent live load.

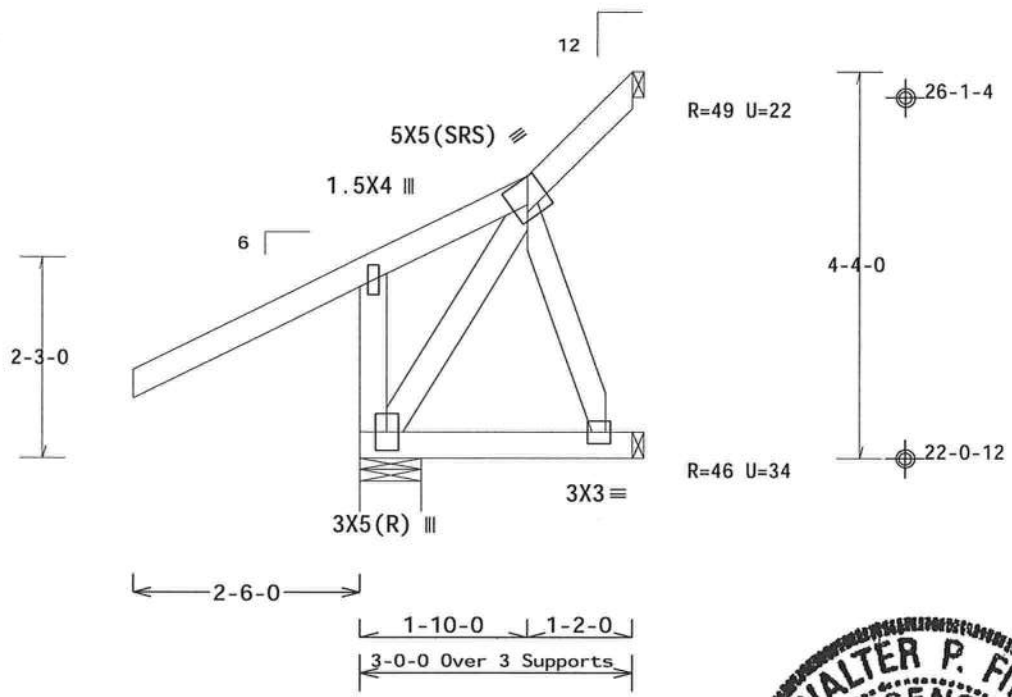

R=362 U=12 W=7.999"
RL=79/-34

Design Crit: FBC2010Res/TPI-2007(STD)
FT/RT=20%(0%)/10(0)

PLT TYP. Wave

10.03.10.1283.10 QTY: 27 FL/-/5/-/-/R/- Scale =.5"/Ft.

WALTER P. FINN LICENSE No.22839 STATE OF FLORIDA PROFESSIONAL ENGINEER

12/19/2012

ALPINE
ITW Building Components Group Inc.
Haines City, FL 33844
FL COA #0 278

WARNING READ AND FOLLOW ALL NOTES ON THIS SHEET!
IMPORTANT FURNISH THIS DESIGN TO ALL CONTRACTORS INCLUDING INSTALLERS.

Trusses require extreme care in fabricating, handling, shipping, installing and bracing. Refer to and follow the latest edition of BCSI (Building Component Safety Information, by TPI and WTCA) for standard practices prior to performing these functions. Installers shall provide temporary bracing per BCSI. Unless noted otherwise, top chord shall have properly attached structural sheathing and bottom chord shall have a properly attached rigid ceiling. Locations shown for permanent lateral restraint of webs shall have bracing installed per BCSI sections B3, B7 or B10, as applicable.

ITW Building Components Group Inc. (ITWBCG) shall not be responsible for any deviation from this design, any failure to build the truss in conformance with ANSI/TPI 1, or for handling, shipping, installation & bracing of trusses. Apply plates to each face of truss and position as shown above and on the Joint Details, unless noted otherwise. Refer to drawings 160A-Z for standard plate positions. A seal on this drawing or cover page listing this drawing, indicates acceptance of professional engineering responsibility solely for the design shown. The suitability and use of this design for any structure is the responsibility of the Building Designer per ANSI/TPI 1 Sec.2. For more information see: This job's general notes page; ITW-BCG: www.itwbcg.com; TPI: www.tpinst.org; WTCA: www.sbcindustry.com; ICC: www.iccsafe.org

TC LL	20.0 PSF	REF	R9114- 87266
TC DL	10.0 PSF	DATE	12/19/12
BC DL	10.0 PSF	DRW	HCUSR9114 12354104
BC LL	0.0 PSF	HC-ENG	SSB/WPF
TOT.LD.	40.0 PSF	SEQN-	285591
DUR.FAC.	1.25	FROM	SDY
SPACING	24.0"	JREF-	1US59114Z05

(120912--Anderson Truss Co. -Patel Residence -- Lot 1 Hills Of Windsor , ** - CJ3A)

Top chord 2x4 SP_#2__12A
Bot chord 2x4 SP_#2__12A
Webs 2x4 SP_#2__12A

Lumber grades designated with "12A" use design values approved 1/5/2012 by ALSC.

Left end vertical not exposed to wind pressure.

Deflection meets L/360 live and L/240 total load. Creep increase factor for dead load is 1.50.

120 mph wind, 30.73 ft mean hgt, ASCE 7-10, CLOSED bldg, Located anywhere in roof, RISK CAT II, EXP B, wind TC DL=5.0 psf, wind BC DL=5.0 psf. GCpi(+/-)=0.18

Wind loads and reactions based on MWFRS with additional C&C member design.

Bottom chord checked for 10.00 psf non-concurrent live load.

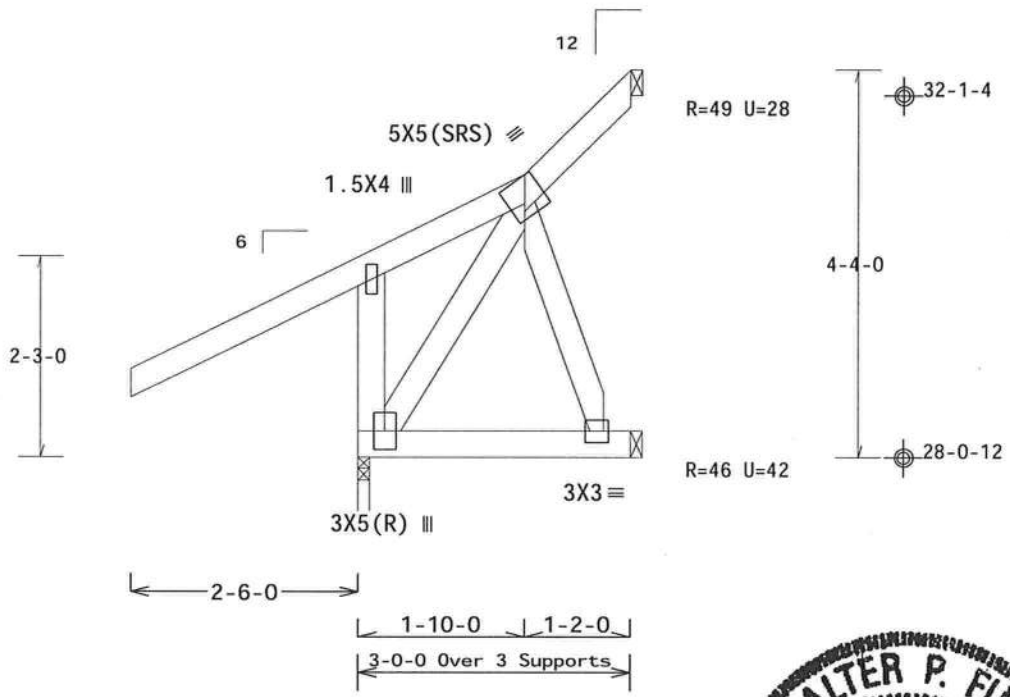

R=362 U=29 W=1.5"(++)
RL=94/-33

Design Crit: FBC2010Res/TPI-2007(STD)
FT/RT=20%(0%)/10(0)

PLT TYP. Wave 10.03.10 1223.10 QTY 2 FL/-/5/-/-/R/- Scale =.5"/Ft.

WALTER P. FINN LICENSE No. 22839 STATE OF FLORIDA PROFESSIONAL ENGINEER

12/19/2012

ALPINE
ITW Building Components Group Inc.
Haines City, FL 33844
FL COA #0 278

WARNING READ AND FOLLOW ALL NOTES ON THIS SHEET!
IMPORTANT FURNISH THIS DESIGN TO ALL CONTRACTORS INCLUDING INSTALLERS.

Trusses require extreme care in fabricating, handling, shipping, installing and bracing. Refer to and follow the latest edition of BCSI (Building Component Safety Information, by TPI and WTCA) for safety practices prior to performing these functions. Installers shall provide temporary bracing per BCSI. Unless noted otherwise, top chord shall have properly attached structural sheathing and bottom chord shall have a properly attached rigid ceiling. Locations shown for permanent lateral restraint of webs shall have bracing installed per BCSI sections B3, B7 or B10, as applicable.

ITW Building Components Group Inc. (ITWBCG) shall not be responsible for any deviation from this design, any failure to build the truss in conformance with ANSI/TPI 1, or for handling, shipping, installation and bracing of trusses. Apply plates to each face of truss and position as shown above and on the Joint Details, unless noted otherwise. Refer to drawings 160A-Z for standard plate positions. A seal on this drawing or cover page listing this drawing, indicates acceptance of professional engineering responsibility solely for the design shown. The suitability and use of this design for any structure is the responsibility of the Building Designer per ANSI/TPI 1 Sec.2. For more information see: This job's general notes page; ITW-BCG: www.itwbcg.com; TPI: www.tpinst.org; WTCA: www.sbcindustry.com; ICC: www.iccsafe.org

TC LL	20.0 PSF	REF	R9114- 87267
TC DL	10.0 PSF	DATE	12/19/12
BC DL	10.0 PSF	DRW	HCUSR9114 12354105
BC LL	0.0 PSF	HC-ENG	SSB/WPF
TOT.LD.	40.0 PSF	SEQN-	285592
DUR.FAC.	1.25	FROM	SDY
SPACING	24.0"	JREF-	1US59114Z05

THIS DWG PREPARED FROM COMPUTER INPUT (LOADS & DIMENSIONS) SUBMITTED BY TRUSS MFR.

(120912--Anderson Truss Co. -Patel Residence -- Lot 1 Hills Of Windsor , ** - CJ3B)

Top chord 2x4 SP_#2__12A
Bot chord 2x4 SP_#2__12A
Webs 2x4 SP_#2__12A

Lumber grades designated with "12A" use design values approved 1/5/2012 by ALSC.

Left end vertical not exposed to wind pressure.

Deflection meets L/360 live and L/240 total load. Creep increase factor for dead load is 1.50.

120 mph wind, 29.35 ft mean hgt, ASCE 7-10, CLOSED bldg, Located anywhere in roof, RISK CAT II, EXP B, wind TC DL=5.0 psf, wind BC DL=5.0 psf. GCpi(+/-)=0.18

Wind loads and reactions based on MWFRS with additional C&C member design.

Bottom chord checked for 10.00 psf non-concurrent live load.

Shim all supports to solid bearing.

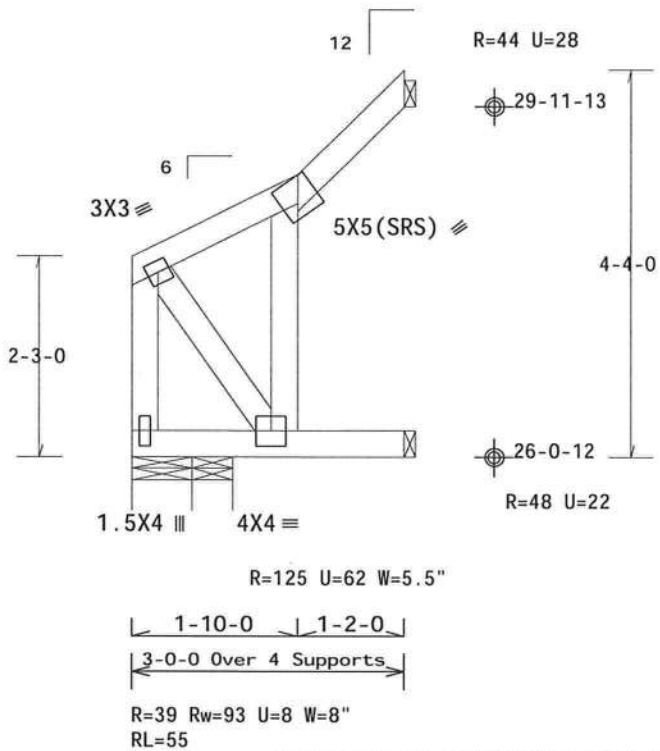

Design Crit: FBC2010Res/TPI-2007(STD)

PLT TYP. Wave

FT/RT=20%(0%)/10(0)

★0.03.10.13★3.10 CT★:

FL/-/5/-/-/R/-

Scale =.5"/Ft.

WALTER P. FINN LICENSE No.22839 STATE OF FLORIDA PROFESSIONAL ENGINEER

12/19/2012

ALPINE

ITW Building Components Group Inc.

Haines City, FL 33844
FL COA #0 278

WARNING READ AND FOLLOW ALL NOTES ON THIS SHEET!
IMPORTANT FURNISH THIS DESIGN TO ALL CONTRACTORS INCLUDING INSTALLERS.

Trusses require extreme care in fabricating, handling, shipping, installing and bracing. Refer to and follow the latest edition of BCSI (Building Component Safety Information, by TPI and WTCA) for good practices prior to performing these functions. Installers shall provide temporary bracing per BCSI. Unless noted otherwise, top chord shall have properly attached structural sheathing and bottom chord shall have a properly attached rigid ceiling. Locations shown for permanent lateral restraint of webs shall have bracing installed per BCSI sections B3, B7 or B10, as applicable.

ITW Building Components Group Inc. (ITWBCG) shall not be responsible for any deviation from this design, any failure to build the truss in conformance with ANSI/TPI 1, or for handling, shipping, installation & bracing of trusses. Apply plates to each face of truss and position as shown above and on the Joint Details, unless noted otherwise. Refer to drawings 160A-Z for standard plate positions. A seal on this drawing or cover page listing this drawing, indicates acceptance of professional engineering responsibility solely for the design shown. The suitability and use of this design for any structure is the responsibility of the Building Designer per ANSI/TPI 1 Sec.2. For more information see: This job's general notes page; ITW-BCG: www.itwbcg.com; TPI: www.tpinst.org; WTCA: www.sbcindustry.com; ICC: www.iccsafe.org

TC LL	20.0 PSF	REF	R9114- 87268
TC DL	10.0 PSF	DATE	12/19/12
BC DL	10.0 PSF	DRW	HCUSR9114 12354106
BC LL	0.0 PSF	HC-ENG	SSB/WPF
TOT.LD.	40.0 PSF	SEQN-	285593
DUR.FAC.	1.25	FROM	SDY
SPACING	24.0"	JREF-	1US59114Z05

(120912--Anderson Truss Co. -Patel Residence -- Lot 1 Hills Of Windsor , ** - CJ4)

THIS DWG PREPARED FROM COMPUTER INPUT (LOADS & DIMENSIONS) SUBMITTED BY TRUSS MFR.

Top chord 2x4 SP_#2__12A
Bot chord 2x4 SP_#2__12A
Webs 2x4 SP_#2__12A

Lumber grades designated with "12A" use design values approved 1/5/2012 by ALSC.

Left end vertical not exposed to wind pressure.

Deflection meets L/360 live and L/240 total load. Creep increase factor for dead load is 1.50.

120 mph wind, 29.38 ft mean hgt, ASCE 7-10, CLOSED bldg, Located anywhere in roof, RISK CAT II, EXP B, wind TC DL=5.0 psf, wind BC DL=5.0 psf. GCpi(+/-)=0.18

Wind loads and reactions based on MWFRS with additional C&C member design.

Bottom chord checked for 10.00 psf non-concurrent live load.

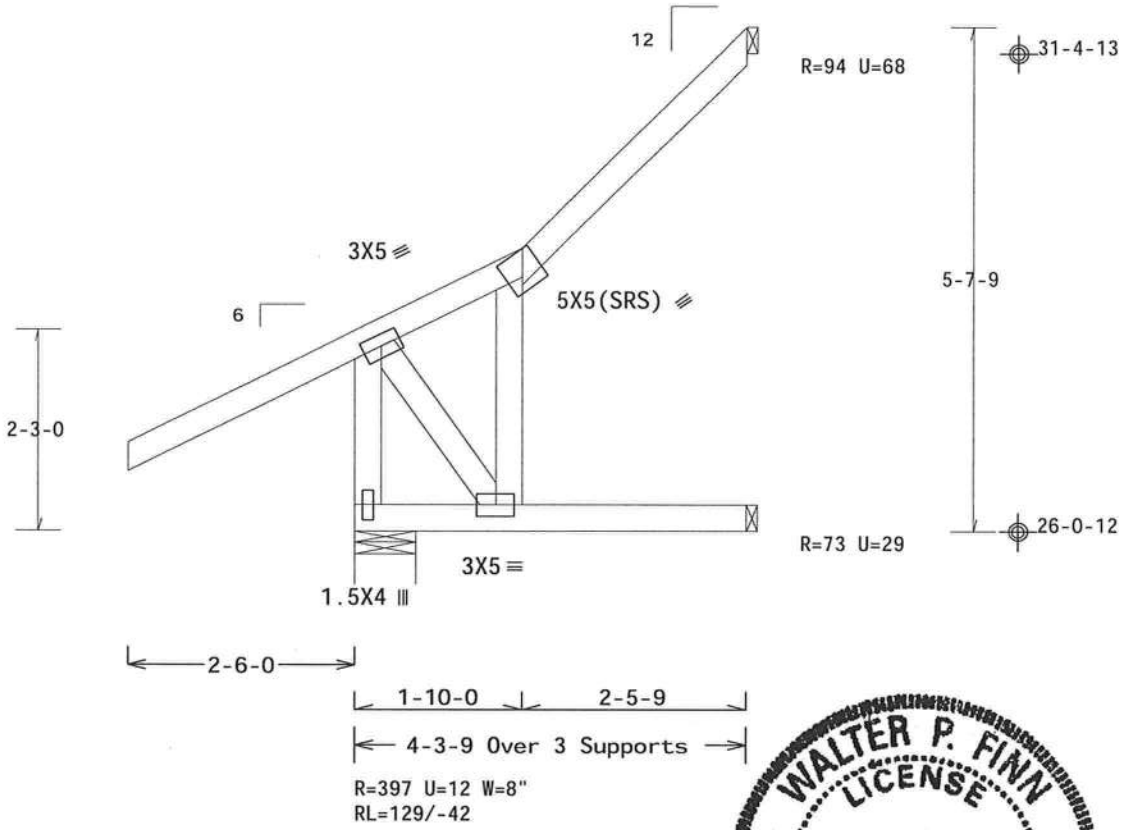

Design Crit: FBC2010Res/TPI-2007(STD)
FT/RT=20%(0%)/10(0)

PLT TYP. Wave

★0.03.10.1.23.10 DTX:

FL/-/5/-/-/R/-

Scale =.5"/Ft.

TC LL	20.0 PSF	REF R9114- 87269
TC DL	10.0 PSF	DATE 12/19/12
BC DL	10.0 PSF	DRW HCUSR9114 12354107
BC LL	0.0 PSF	HC-ENG SSB/WPF
TOT.LD.	40.0 PSF	SEQN- 285594
DUR.FAC.	1.25	FROM SDY
SPACING	24.0"	JREF- 1US59114Z05

WALTER P. FINN
LICENSE
No.22839
STATE OF FLORIDA
PROFESSIONAL ENGINEER

12/19/2012

ALPINE
ITW Building Components Group Inc.
Haines City, FL 33844
FL COA #0 278

WARNING READ AND FOLLOW ALL NOTES ON THIS SHEET!
IMPORTANT FURNISH THIS DESIGN TO ALL CONTRACTORS INCLUDING INSTALLERS.

Trusses require extreme care in fabricating, handling, shipping, installing and bracing. Refer to and follow the latest edition of BCSI (Building Component Safety Information, by TPI and WTCA) for general guidelines practices prior to performing these functions. Installers shall provide temporary bracing per BCSI. Unless noted otherwise, top chord shall have properly attached structural sheathing and bottom chord shall have a properly attached rigid ceiling. Locations shown for permanent lateral restraint of webs shall have bracing installed per BCSI sections B3, B7 or B10, as applicable.

ITW Building Components Group Inc. (ITWBCG) shall not be responsible for any deviation from this design, any failure to build the truss in conformance with ANSI/TPI 1, or for handling, shipping, installation & bracing of trusses. Apply plates to each face of truss and position as shown above and on the Joint Details, unless noted otherwise. Refer to drawings 160A-Z for standard plate positions. A seal on this drawing or cover page listing this drawing, indicates acceptance of professional engineering responsibility solely for the design shown. The suitability and use of this design for any structure is the responsibility of the Building Designer per ANSI/TPI 1 Sec.2. For more information see: This job's general notes page; ITW-BCG: www.itwbcg.com; TPI: www.tpinst.org; WTCA: www.sbcindustry.com; ICC: www.iccsafe.org

THIS DWG PREPARED FROM COMPUTER INPUT (LOADS & DIMENSIONS) SUBMITTED BY TRUSS MFR.

(120912--Anderson Truss Co. -Patel Residence -- Lot 1 Hills Of Windsor , ** - CJ5)

Top chord 2x4 SP_#2__12A
Bot chord 2x4 SP_#2__12A
Webs 2x4 SP_#2__12A

Lumber grades designated with "12A" use design values approved 1/5/2012 by ALSC.

Left end vertical not exposed to wind pressure.

Deflection meets L/360 live and L/240 total load. Creep increase factor for dead load is 1.50.

120 mph wind, 25.73 ft mean hgt, ASCE 7-10, CLOSED bldg, not located within 4.50 ft from roof edge, RISK CAT II, EXP B, wind TC DL=5.0 psf, wind BC DL=5.0 psf. GCpi(+/-)=0.18

Wind loads and reactions based on MWFRS with additional C&C member design.

Bottom chord checked for 10.00 psf non-concurrent live load.

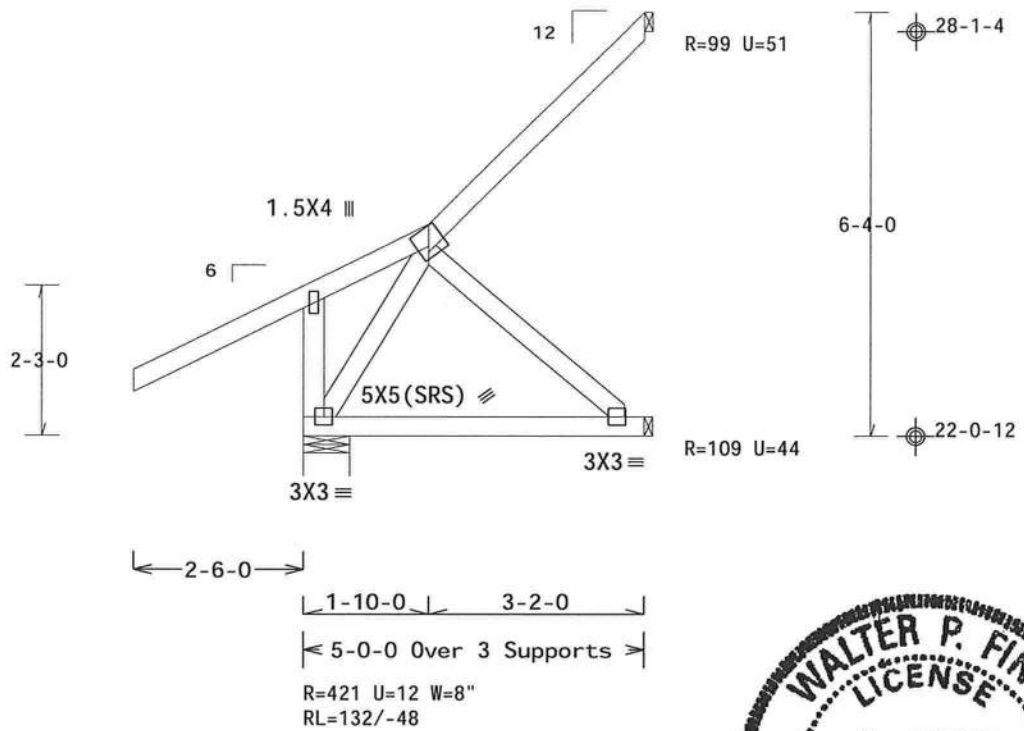

Design Crit: FBC2010Res/TPI-2007(STD) 10.03.10.1223.10 CTI:[illegible] FL/-/5/-/-/R/-

PLT TYP. Wave

FT/RT=20%(0%)/10(0)

Scale =.375"/Ft.

ALPINE
ITW Building Components Group Inc.
Haines City, FL 33844
FL COA #0 278

WARNING READ AND FOLLOW ALL NOTES ON THIS SHEET!
IMPORTANT FURNISH THIS DESIGN TO ALL CONTRACTORS INCLUDING INSTALLERS.

Trusses require extreme care in fabricating, handling, shipping, installing and bracing. Refer to and follow the latest edition of BCSI (Building Component Safety Information, by TPI and WTCA) for standard practices prior to performing these functions. Installers shall provide temporary bracing per BCSI. Unless noted otherwise, top chord shall have properly attached structural sheathing and bottom chord shall have a properly attached rigid ceiling. Locations shown for permanent lateral restraint of webs shall have bracing installed per BCSI sections B3, B7 or B10, as applicable.

ITW Building Components Group Inc. (ITWBCG) shall not be responsible for any deviation from this design, any failure to build the truss in conformance with ANSI/TPI 1, or for handling, shipping, installation & bracing of trusses. Apply plates to each face of truss and position as shown above and on the Joint Details, unless noted otherwise. Refer to drawings 160A-Z for standard plate positions. A seal on this drawing or cover page listing this drawing, indicates acceptance of professional engineering responsibility solely for the design shown. The suitability and use of this design for any structure is the responsibility of the Building Designer per ANSI/TPI 1 Sec.2. For more information see: This job's general notes page; ITW-BCG: www.itwbcg.com; TPI: www.tpinst.org; WTCA: www.sbcindustry.com; ICC: www.iccsafe.org

WALTER P. FINN
LICENSE
No.22839
STATE OF FLORIDA
PROFESSIONAL ENGINEER
12/19/2012

TC LL	20.0 PSF	REF	R9114- 87270
TC DL	10.0 PSF	DATE	12/19/12
BC DL	10.0 PSF	DRW	HCUSR9114 12354108
BC LL	0.0 PSF	HC-ENG	SSB/WPF
TOT.LD.	40.0 PSF	SEQN-	285595
DUR.FAC.	1.25	FROM	SDY
SPACING	24.0"	JREF-	1US59114Z05

THIS DWG PREPARED FROM COMPUTER INPUT (LOADS & DIMENSIONS) SUBMITTED BY TRUSS MFR.

(120912--Anderson Truss Co. -Patel Residence -- Lot 1 Hills Of Windsor , ** - CJ5A)

Top chord 2x4 SP_#2__12A
Bot chord 2x4 SP_#2__12A
Webs 2x4 SP_#2__12A

Lumber grades designated with "12A" use design values approved 1/5/2012 by ALSC.

Left end vertical not exposed to wind pressure.

Bottom chord checked for 10.00 psf non-concurrent live load.

120 mph wind, 30.35 ft mean hgt, ASCE 7-10, CLOSED bldg, not located within 4.50 ft from roof edge, RISK CAT II, EXP B, wind TC DL=5.0 psf, wind BC DL=5.0 psf. GCpi(+/-)=0.18

Wind loads and reactions based on MWFRS with additional C&C member design.

Left cantilever is exposed to wind

Deflection meets L/360 live and L/240 total load. Creep increase factor for dead load is 1.50.

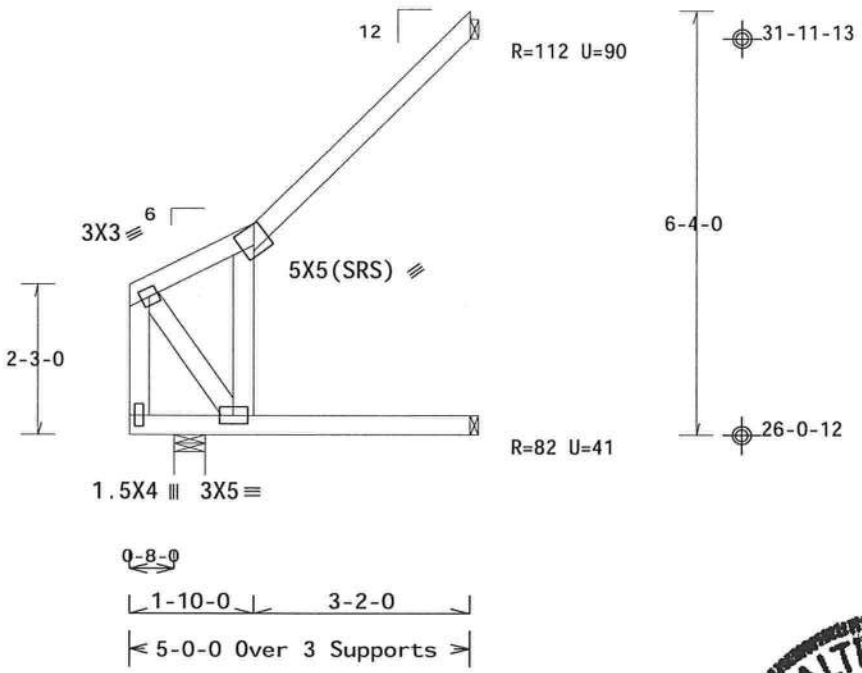

Design Crit: FBC2010Res/TPI-2007(STD)
FT/RT=20%(0%)/10(0) 10.03.10.1223.10 QTY 1 FL/-/5/-/-/R/- Scale =.375"/Ft.

PLT TYP. Wave

ALPINE
ITW Building Components Group Inc.
Haines City, FL 33844
FL COA #0 278

WARNING READ AND FOLLOW ALL NOTES ON THIS SHEET!
IMPORTANT FURNISH THIS DESIGN TO ALL CONTRACTORS INCLUDING INSTALLERS.

Trusses require extreme care in fabricating, handling, shipping, installing and bracing. Refer to and follow the latest edition of BCSI (Building Component Safety Information, by TPI and WTCA) for safety practices prior to performing these functions. Installers shall provide temporary bracing per BCSI. Unless noted otherwise, top chord shall have properly attached structural sheathing and bottom chord shall have a properly attached rigid ceiling. Locations shown for permanent lateral restraint of webs shall have bracing installed per BCSI sections B3, B7 or B10, as applicable.

ITW Building Components Group Inc. (ITWBCG) shall not be responsible for any deviation from this design, any failure to build the truss in conformance with ANSI/TPI 1, or for handling, shipping, installation and bracing of trusses. Apply plates to each face of truss and position as shown above and on the Joint Details, unless noted otherwise. Refer to drawings 160A-Z for standard plate positions. A seal on this drawing or cover page listing this drawing, indicates acceptance of professional engineering responsibility solely for the design shown. The suitability and use of this design for any structure is the responsibility of the Building Designer per ANSI/TPI 1 Sec.2. For more information see: This job's general notes page; ITW-BCG: www.itwbcg.com; TPI: www.tpinst.org; WTCA: www.sbcindustry.com; ICC: www.iccsafe.org

WALTER P. FINN
LICENSE
No. 22839
STATE OF FLORIDA
PROFESSIONAL ENGINEER

12/19/2012

TC LL	20.0 PSF	REF	R9114- 87271
TC DL	10.0 PSF	DATE	12/19/12
BC DL	10.0 PSF	DRW	HCUSR9114 12354109
BC LL	0.0 PSF	HC-ENG	SSB/WPF
TOT.LD.	40.0 PSF	SEQN-	285596
DUR.FAC.	1.25	FROM	SDY
SPACING	24.0"	JREF-	1US59114Z05

(120912--Anderson Truss Co. -Patel Residence -- Lot 1 Hills Of Windsor , ** - CJ6)

THIS DWG PREPARED FROM COMPUTER INPUT (LOADS & DIMENSIONS) SUBMITTED BY TRUSS MFR.

Top chord 2x4 SP_#2__12A
Bot chord 2x4 SP_#2__12A
Webs 2x4 SP_#2__12A

Lumber grades designated with "12A" use design values approved 1/5/2012 by ALSC.

120 mph wind, 28.47 ft mean hgt, ASCE 7-10, CLOSED bldg, Located anywhere in roof, RISK CAT II, EXP B, wind TC DL=5.0 psf, wind BC DL=5.0 psf. GCpi(+/-)=0.18

Wind loads and reactions based on MWFRS with additional C&C member design.

Left end vertical not exposed to wind pressure.

Special loads
------(Lumber Dur.Fac.=1.25 / Plate Dur.Fac.=1.25)

TC- From	0 plf at	-2.50 to	62 plf at	0.00
TC- From	2 plf at	0.00 to	2 plf at	1.83
TC- From	0 plf at	1.83 to	68 plf at	4.33
BC- From	0 plf at	-2.50 to	4 plf at	0.00
BC- From	2 plf at	0.00 to	2 plf at	2.48

Bottom chord checked for 10.00 psf non-concurrent live load.

Deflection meets L/360 live and L/240 total load. Creep increase factor for dead load is 1.50.

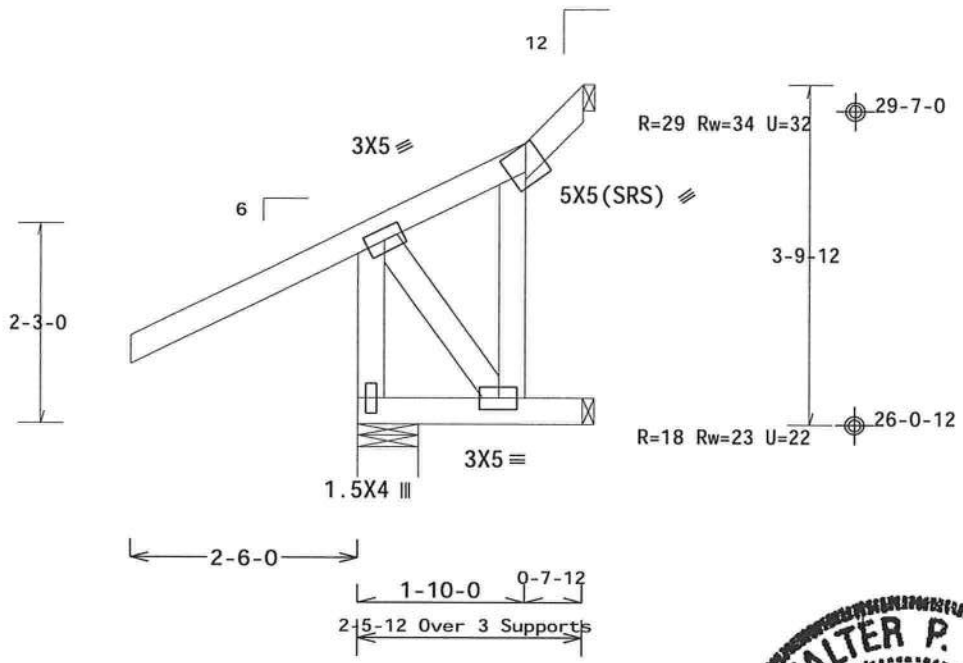

Design Crit: FBC2010Res/TPI-2007(STD)
FT/RT=20%(0%)/10(0)

PLT TYP. Wave

10.03.10.1223.10 QTY 1

FL/-/5/-/-/R/-

Scale =.5"/Ft.

WALTER P. FINN LICENSE No.22839 STATE OF FLORIDA PROFESSIONAL ENGINEER

12/19/2012

ALPINE
ITW Building Components Group Inc.
Haines City, FL 33844
FL COA #0 278

WARNING READ AND FOLLOW ALL NOTES ON THIS SHEET!
IMPORTANT FURNISH THIS DESIGN TO ALL CONTRACTORS INCLUDING INSTALLERS.

Trusses require extreme care in fabricating, handling, shipping, installing and bracing. Refer to and follow the latest edition of BCSI (Building Component Safety Information, by TPI and WTCA) for general guidelines practices prior to performing these functions. Installers shall provide temporary bracing per BCSI. Unless noted otherwise, top chord shall have properly attached structural sheathing and bottom chord shall have a properly attached rigid ceiling. Locations shown for permanent lateral restraint of webs shall have bracing installed per BCSI sections B3, B7 or B10, as applicable.

ITW Building Components Group Inc. (ITWBCG) shall not be responsible for any deviation from this design, any failure to build the truss in conformance with ANSI/TPI 1, or for handling, shipping, installation and bracing of trusses. Apply plates to each face of truss and position as shown above and on the Joint Details, unless noted otherwise. Refer to drawings 160A-Z for standard plate positions. A seal on this drawing or cover page listing this drawing, indicates acceptance of professional engineering responsibility solely for the design shown. The suitability and use of this design for any structure is the responsibility of the Building Designer per ANSI/TPI 1 Sec.2. For more information see: This job's general notes page; ITW-BCG: www.itwbcg.com; TPI: www.tpinst.org; WTCA: www.sbcindustry.com; ICC: www.iccsafe.org

TC LL	20.0 PSF	REF	R9114- 87272
TC DL	10.0 PSF	DATE	12/19/12
BC DL	10.0 PSF	DRW	HCUSR9114 12354110
BC LL	0.0 PSF	HC-ENG	SSB/WPF
TOT.LD.	40.0 PSF	SEQN-	285597
DUR.FAC.	1.25	FROM	SDY
SPACING	24.0"	JREF-	1US59114Z05

THIS DWG PREPARED FROM COMPUTER INPUT (LOADS & DIMENSIONS) SUBMITTED BY TRUSS MFR.

(120912--Anderson Truss Co. -Patel Residence -- Lot 1 Hills Of Windsor , ** - CJ7)

Top chord 2x4 SP_#2__12A
Bot chord 2x4 SP_#2__12A
Webs 2x4 SP_#2__12A

Lumber grades designated with "12A" use design values approved 1/5/2012 by ALSC.

Left end vertical not exposed to wind pressure.

Deflection meets L/360 live and L/240 total load. Creep increase factor for dead load is 1.50.

120 mph wind, 29.47 ft mean hgt, ASCE 7-10, CLOSED bldg, Located anywhere in roof, RISK CAT II, EXP B, wind TC DL=5.0 psf, wind BC DL=5.0 psf. GCpi(+/-)=0.18

Wind loads and reactions based on MWFRS with additional C&C member design.

Bottom chord checked for 10.00 psf non-concurrent live load.

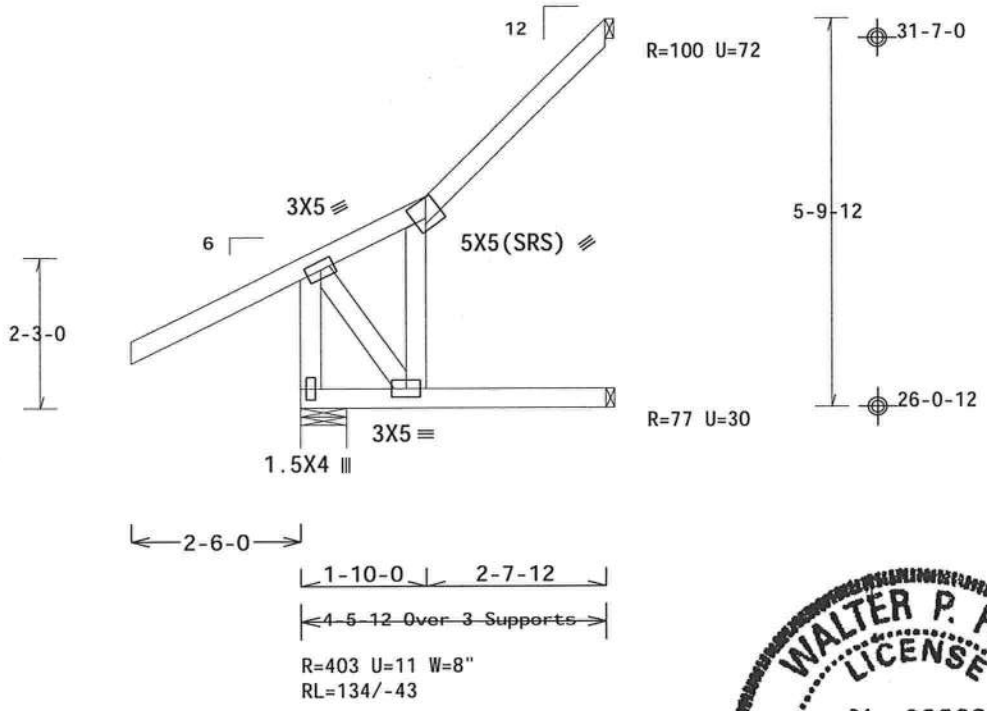

Design Crit: FBC2010Res/TPI-2007(STD)
FT/RT=20%(0%)/10(0)

PLT TYP. Wave

10.03.10.1823.10 DTX:

FL/-/5/-/-/R/-

Scale =.375"/Ft.

WALTER P. FINN LICENSE No.22839 STATE OF FLORIDA PROFESSIONAL ENGINEER

12/19/2012

ALPINE
ITW Building Components Group Inc.
Haines City, FL 33844
FL COA #0 278

WARNING READ AND FOLLOW ALL NOTES ON THIS SHEET!
IMPORTANT FURNISH THIS DESIGN TO ALL CONTRACTORS INCLUDING INSTALLERS.

Trusses require extreme care in fabricating, handling, shipping, installing and bracing. Re[illegible] follow the latest edition of BCSI (Building Component Safety Information, by TPI and WTCA) for [illegible] practices prior to performing these functions. Installers shall provide temporary bracing per B[illegible] Unless noted otherwise, top chord shall have properly attached structural sheathing and bottom ch[illegible] shall have a properly attached rigid ceiling. Locations shown for permanent lateral restraint of [illegible] shall have bracing installed per BCSI sections B3, B7 or B10, as applicable.

ITW Building Components Group Inc. (ITWBCG) shall not be responsible for any deviation from this desi[illegible] any failure to build the truss in conformance with ANSI/TPI 1, or for handling, shipping, installation & bracing of trusses. Apply plates to each face of truss and position as shown above and on the Joint Details, unless noted otherwise. Refer to drawings 160A-Z for standard plate positions. A seal on this drawing or cover page listing this drawing, indicates acceptance of professional engineering responsibility solely for the design shown. The suitability and use of this design for any structure is the responsibility of the Building Designer per ANSI/TPI 1 Sec.2. For more information see: This job's general notes page; ITW-BCG: www.itwbcg.com; TPI: www.tpinst.org; WTCA: www.sbcindustry.com; ICC: www.iccsafe.org

TC LL	20.0 PSF	REF	R9114- 87273
TC DL	10.0 PSF	DATE	12/19/12
BC DL	10.0 PSF	DRW	HCUSR9114 12354111
BC LL	0.0 PSF	HC-ENG	SSB/WPF
TOT.LD.	40.0 PSF	SEQN-	285598
DUR.FAC.	1.25	FROM	SDY
SPACING	24.0"	JREF-	1US59114Z05

(120912--Anderson Truss Co. -Patel Residence -- Lot 1 Hills Of Windsor , ** - CJ8)

THIS DWG PREPARED FROM COMPUTER INPUT (LOADS & DIMENSIONS) SUBMITTED BY TRUSS MFR.

Top chord 2x4 SP_#2__12A
Bot chord 2x4 SP_#2__12A
Webs 2x4 SP_#2__12A

Lumber grades designated with "12A" use design values approved 1/5/2012 by ALSC.

Left end vertical not exposed to wind pressure.

Deflection meets L/360 live and L/240 total load. Creep increase factor for dead load is 1.50.

120 mph wind, 29.50 ft mean hgt, ASCE 7-10, CLOSED bldg, not located within 4.50 ft from roof edge, RISK CAT II, EXP B, wind TC DL=5.0 psf, wind BC DL=5.0 psf. GCpi(+/-)=0.18

Wind loads and reactions based on MWFRS with additional C&C member design.

Bottom chord checked for 10.00 psf non-concurrent live load.

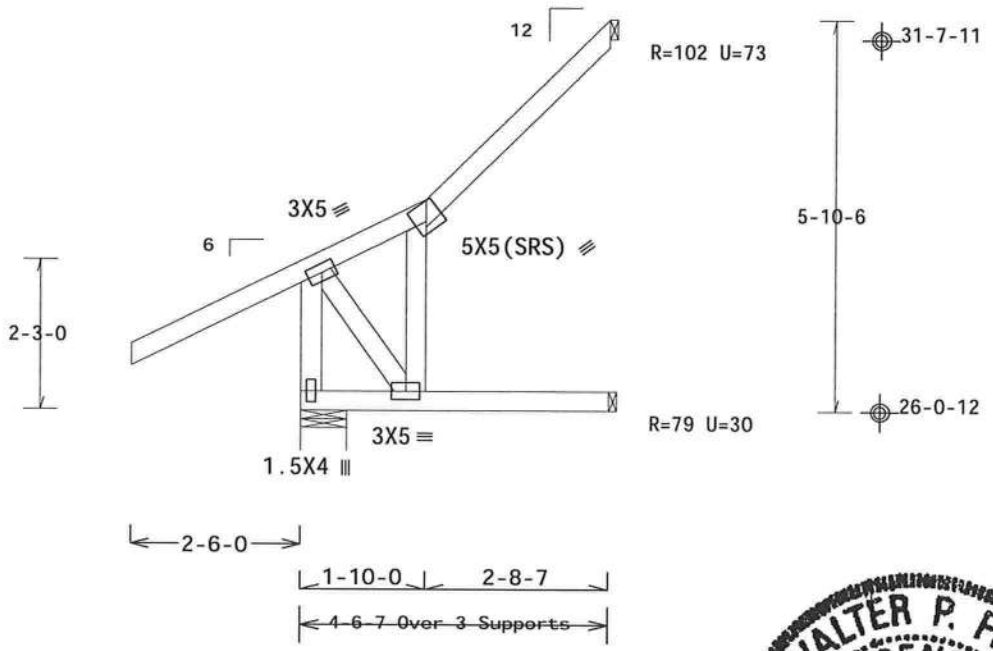

Design Crit: FBC2010Res/TPI-2007(STD)
FT/RT=20%(0%)/10(0) ★0.03.10.1273.70 GTR:

PLT TYP. Wave

FL/-/5/-/-/R/-

Scale =.375"/Ft.

WALTER P. FINN LICENSE No.22839 STATE OF FLORIDA PROFESSIONAL ENGINEER

12/19/2012

ALPINE
ITW Building Components Group Inc.
Haines City, FL 33844
FL COA #0 278

WARNING READ AND FOLLOW ALL NOTES ON THIS SHEET!
IMPORTANT FURNISH THIS DESIGN TO ALL CONTRACTORS INCLUDING INSTALLERS.

Trusses require extreme care in fabricating, handling, shipping, installing and bracing. Refer to and follow the latest edition of BCSI (Building Component Safety Information, by TPI and WTCA) for general guidelines practices prior to performing these functions. Installers shall provide temporary bracing per BCSI. Unless noted otherwise, top chord shall have properly attached structural sheathing and bottom chord shall have a properly attached rigid ceiling. Locations shown for permanent lateral restraint of webs shall have bracing installed per BCSI sections B3, B7 or B10, as applicable.

ITW Building Components Group Inc. (ITWBCG) shall not be responsible for any deviation from this design, any failure to build the truss in conformance with ANSI/TPI 1, or for handling, shipping, installation & bracing of trusses. Apply plates to each face of truss and position as shown above and on the Joint Details, unless noted otherwise. Refer to drawings 160A-Z for standard plate positions. A seal on this drawing or cover page listing this drawing, indicates acceptance of professional engineering responsibility solely for the design shown. The suitability and use of this design for any structure is the responsibility of the Building Designer per ANSI/TPI 1 Sec.2. For more information see: This job's general notes page; ITW-BCG: www.itwbcg.com; TPI: www.tpinst.org; WTCA: www.sbcindustry.com; ICC: www.iccsafe.org

TC LL	20.0 PSF	REF	R9114- 87274
TC DL	10.0 PSF	DATE	12/19/12
BC DL	10.0 PSF	DRW	HCUSR9114 12354112
BC LL	0.0 PSF	HC-ENG	SSB/WPF
TOT.LD.	40.0 PSF	SEQN-	285599
DUR.FAC.	1.25	FROM	SDY
SPACING	24.0"	JREF-	1US59114Z05

THIS DWG PREPARED FROM COMPUTER INPUT (LOADS & DIMENSIONS) SUBMITTED BY TRUSS MFR.

(120912--Anderson Truss Co. -Patel Residence -- Lot 1 Hills Of Windsor , ** - CJ9)

Top chord 2x4 SP_#2__12A
Bot chord 2x4 SP_#2__12A
Webs 2x4 SP_#2__12A

Lumber grades designated with "12A" use design values approved 1/5/2012 by ALSC.

Left end vertical not exposed to wind pressure.

Deflection meets L/360 live and L/240 total load. Creep increase factor for dead load is 1.50.

120 mph wind, 29.49 ft mean hgt, ASCE 7-10, CLOSED bldg, not located within 4.50 ft from roof edge, RISK CAT II, EXP B, wind TC DL=5.0 psf, wind BC DL=5.0 psf. GCpi(+/-)=0.18

Wind loads and reactions based on MWFRS with additional C&C member design.

Bottom chord checked for 10.00 psf non-concurrent live load.

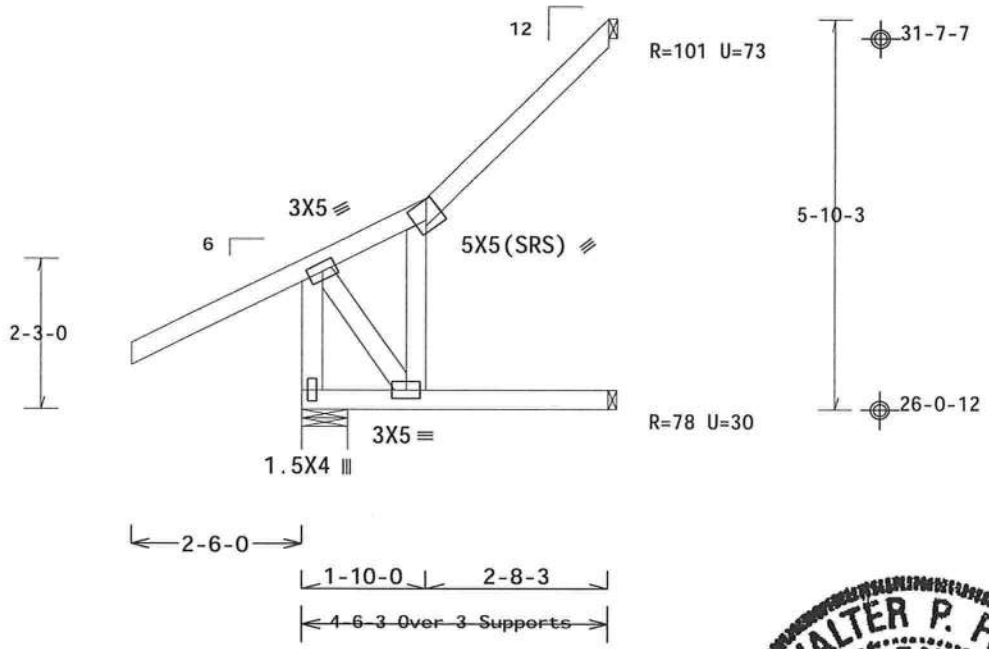

Design Crit: FBC2010Res/TPI-2007(STD)
FT/RT=20%(0%)/10(0)

PLT TYP. Wave

10.03.10.1823.10 DT:

FL/-/5/-/-/R/-

Scale =.375"/Ft.

TC LL	20.0 PSF	REF	R9114- 87275
TC DL	10.0 PSF	DATE	12/19/12
BC DL	10.0 PSF	DRW	HCUSR9114 12354113
BC LL	0.0 PSF	HC-ENG	SSB/WPF
TOT.LD.	40.0 PSF	SEQN-	285600
DUR.FAC.	1.25	FROM	SDY
SPACING	24.0"	JREF-	1US59114Z05

WALTER P. FINN
LICENSE
No.22839
STATE OF FLORIDA
PROFESSIONAL ENGINEER

12/19/2012

ALPINE
ITW Building Components Group Inc.
Haines City, FL 33844
FL COA #0 278

WARNING READ AND FOLLOW ALL NOTES ON THIS SHEET!
IMPORTANT FURNISH THIS DESIGN TO ALL CONTRACTORS INCLUDING INSTALLERS.

Trusses require extreme care in fabricating, handling, shipping, installing and bracing. Refer to and follow the latest edition of BCSI (Building Component Safety Information, by TPI and WTCA) for standard practices prior to performing these functions. Installers shall provide temporary bracing per BCSI. Unless noted otherwise, top chord shall have properly attached structural sheathing and bottom chord shall have a properly attached rigid ceiling. Locations shown for permanent lateral restraint of webs shall have bracing installed per BCSI sections B3, B7 or B10, as applicable.

ITW Building Components Group Inc. (ITWBCG) shall not be responsible for any deviation from this design, any failure to build the truss in conformance with ANSI/TPI 1, or for handling, shipping, installation & bracing of trusses. Apply plates to each face of truss and position as shown above and on the Joint Details, unless noted otherwise. Refer to drawings 160A-Z for standard plate positions. A seal on this drawing or cover page listing this drawing, indicates acceptance of professional engineering responsibility solely for the design shown. The suitability and use of this design for any structure is the responsibility of the Building Designer per ANSI/TPI 1 Sec.2. For more information see: This job's general notes page; ITW-BCG: www.itwbcg.com; TPI: www.tpinst.org; WTCA: www.sbcindustry.com; ICC: www.iccsafe.org

THIS DWG PREPARED FROM COMPUTER INPUT (LOADS & DIMENSIONS) SUBMITTED BY TRUSS MFR.

(120912--Anderson Truss Co. -Patel Residence -- Lot 1 Hills Of Windsor , ** - CJ10)

Top chord 2x4 SP_#2__12A
Bot chord 2x4 SP_#2__12A
Webs 2x4 SP_#2__12A

Lumber grades designated with "12A" use design values approved 1/5/2012 by ALSC.

Left end vertical not exposed to wind pressure.

Deflection meets L/360 live and L/240 total load. Creep increase factor for dead load is 1.50.

120 mph wind, 29.47 ft mean hgt, ASCE 7-10, CLOSED bldg, Located anywhere in roof, RISK CAT II, EXP B, wind TC DL=5.0 psf, wind BC DL=5.0 psf. GCpi(+/-)=0.18

Wind loads and reactions based on MWFRS with additional C&C member design.

Bottom chord checked for 10.00 psf non-concurrent live load.

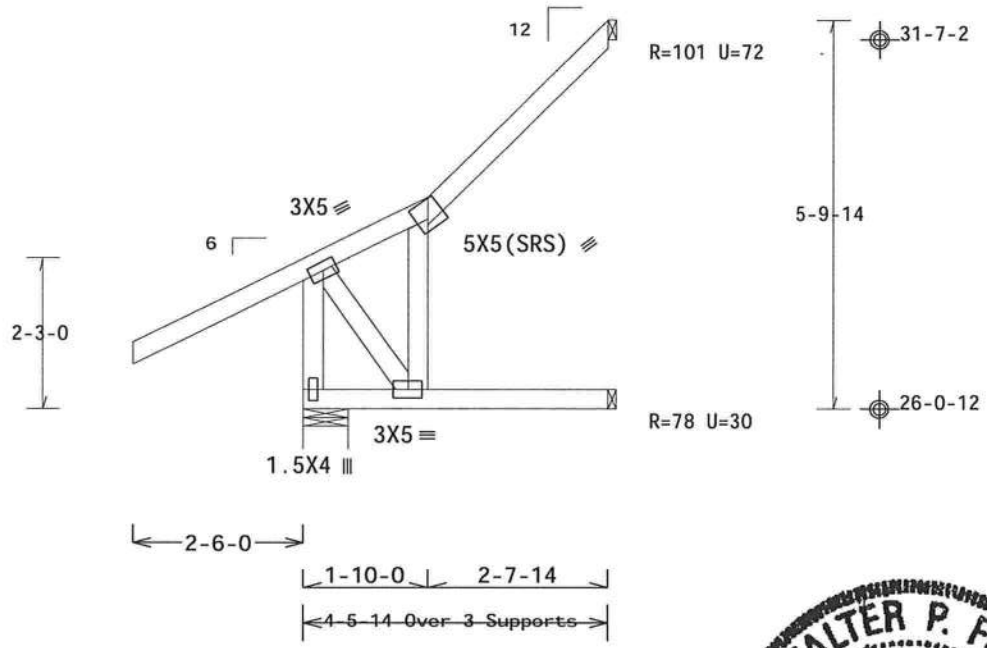

R=403 U=22 W=8"
RL=134/-43

Design Crit: FBC2010Res/TPI-2007(STD)
FT/RT=20%(0%)/10(0)

PLT TYP. Wave

10.03.10.1223.10 QTY 1

FL/-/5/-/-/R/-

Scale =.375"/Ft.

WALTER P. FINN LICENSE No.22839 STATE OF FLORIDA PROFESSIONAL ENGINEER

12/19/2012

ALPINE
ITW Building Components Group Inc.
Haines City, FL 33844
FL COA #0 278

WARNING READ AND FOLLOW ALL NOTES ON THIS SHEET!
IMPORTANT FURNISH THIS DESIGN TO ALL CONTRACTORS INCLUDING INSTALLERS.

Trusses require extreme care in fabricating, handling, shipping, installing and bracing. Refer to and follow the latest edition of BCSI (Building Component Safety Information, by TPI and WTCA) for general practices prior to performing these functions. Installers shall provide temporary bracing per BCSI. Unless noted otherwise, top chord shall have properly attached structural sheathing and bottom chord shall have a properly attached rigid ceiling. Locations shown for permanent lateral restraint of webs shall have bracing installed per BCSI sections B3, B7 or B10, as applicable.

ITW Building Components Group Inc. (ITWBCG) shall not be responsible for any deviation from this design, any failure to build the truss in conformance with ANSI/TPI 1, or for handling, shipping, installation and bracing of trusses. Apply plates to each face of truss and position as shown above and on the Joint Details, unless noted otherwise. Refer to drawings 160A-Z for standard plate positions. A seal on this drawing or cover page listing this drawing, indicates acceptance of professional engineering responsibility solely for the design shown. The suitability and use of this design for any structure is the responsibility of the Building Designer per ANSI/TPI 1 Sec.2. For more information see: This job's general notes page; ITW-BCG: www.itwbcg.com; TPI: www.tpinst.org; WTCA: www.sbcindustry.com; ICC: www.iccsafe.org

TC LL	20.0 PSF	REF	R9114- 87276
TC DL	10.0 PSF	DATE	12/19/12
BC DL	10.0 PSF	DRW	HCUSR9114 12354114
BC LL	0.0 PSF	HC-ENG	SSB/WPF
TOT.LD.	40.0 PSF	SEQN-	285601
DUR.FAC.	1.25	FROM	SDY
SPACING	24.0"	JREF-	1US59114Z05

THIS DWG PREPARED FROM COMPUTER INPUT (LOADS & DIMENSIONS) SUBMITTED BY TRUSS MFR.

(120912--Anderson Truss Co. -Patel Residence -- Lot 1 Hills Of Windsor , ** - CJ11)

Top chord 2x4 SP_#2__12A
Bot chord 2x4 SP_#2__12A
Webs 2x4 SP_#2__12A

Lumber grades designated with "12A" use design values approved 1/5/2012 by ALSC.

120 mph wind, 28.47 ft mean hgt, ASCE 7-10, CLOSED bldg, Located anywhere in roof, RISK CAT II, EXP B, wind TC DL=5.0 psf, wind BC DL=5.0 psf. GCpi(+/-)=0.18

Wind loads and reactions based on MWFRS with additional C&C member design.

Left end vertical not exposed to wind pressure.

Special loads
------(Lumber Dur.Fac.=1.25 / Plate Dur.Fac.=1.25)

TC- From	0 plf at	-2.50 to	62 plf at	0.00
TC- From	2 plf at	0.00 to	2 plf at	1.83
TC- From	0 plf at	1.83 to	68 plf at	4.33
BC- From	0 plf at	-2.50 to	4 plf at	0.00
BC- From	2 plf at	0.00 to	2 plf at	2.49

Bottom chord checked for 10.00 psf non-concurrent live load.

Deflection meets L/360 live and L/240 total load. Creep increase factor for dead load is 1.50.

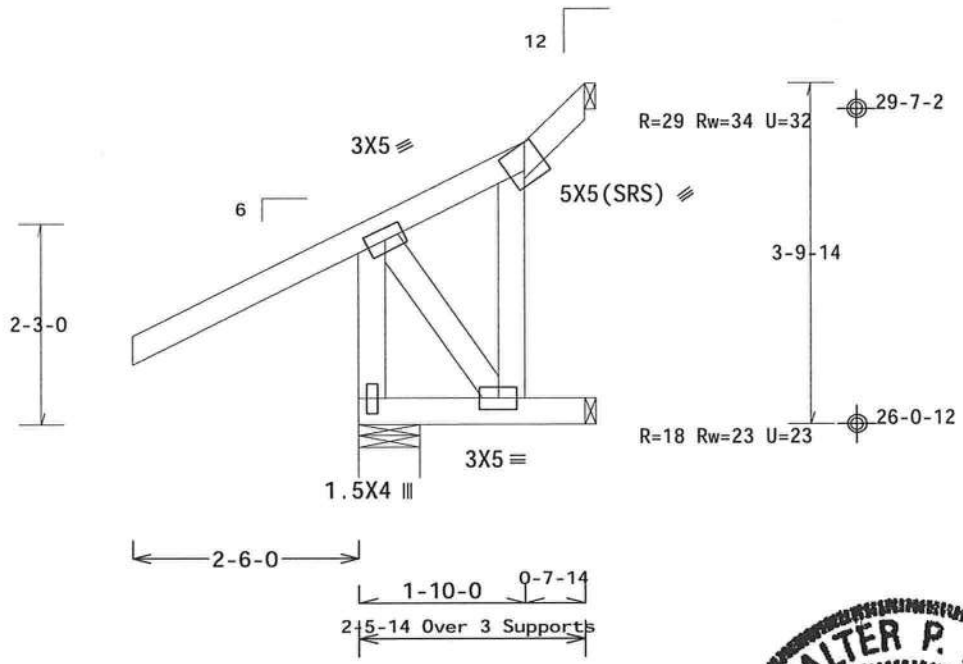

R=179 Rw=198 U=26 W=8"
RL=76/-30

Design Crit: FBC2010Res/TPI-2007(STD)
FT/RT=20%(0%)/10(0)

PLT TYP. Wave

10.03.10.1223.10 QTY 1 FL/-/5/-/-/R/- Scale =.5"/Ft.

WALTER P. FINN LICENSE No. 22839 STATE OF FLORIDA PROFESSIONAL ENGINEER

12/19/2012

ALPINE
ITW Building Components Group Inc.
Haines City, FL 33844
FL COA #0 278

WARNING READ AND FOLLOW ALL NOTES ON THIS SHEET!
IMPORTANT FURNISH THIS DESIGN TO ALL CONTRACTORS INCLUDING INSTALLERS.

Trusses require extreme care in fabricating, handling, shipping, installing and bracing. Refer to and follow the latest edition of BCSI (Building Component Safety Information, by TPI and WTCA) for safety practices prior to performing these functions. Installers shall provide temporary bracing per BCSI. Unless noted otherwise, top chord shall have properly attached structural sheathing and bottom chord shall have a properly attached rigid ceiling. Locations shown for permanent lateral restraint of webs shall have bracing installed per BCSI sections B3, B7 or B10, as applicable.

ITW Building Components Group Inc. (ITWBCG) shall not be responsible for any deviation from this design, any failure to build the truss in conformance with ANSI/TPI 1, or for handling, shipping, installation and bracing of trusses. Apply plates to each face of truss and position as shown above and on the Joint Details, unless noted otherwise. Refer to drawings 160A-Z for standard plate positions. A seal on this drawing or cover page listing this drawing, indicates acceptance of professional engineering responsibility solely for the design shown. The suitability and use of this design for any structure is the responsibility of the Building Designer per ANSI/TPI 1 Sec.2. For more information see: This job's general notes page; ITW-BCG: www.itwbcg.com; TPI: www.tpinst.org; WTCA: www.sbcindustry.com; ICC: www.iccsafe.org

TC LL	20.0 PSF	REF	R9114- 87277
TC DL	10.0 PSF	DATE	12/19/12
BC DL	10.0 PSF	DRW	HCUSR9114 12354115
BC LL	0.0 PSF	HC-ENG	SSB/WPF
TOT.LD.	40.0 PSF	SEQN-	285602
DUR.FAC.	1.25	FROM	SDY
SPACING	24.0"	JREF-	1US59114Z05

THIS DWG PREPARED FROM COMPUTER INPUT (LOADS & DIMENSIONS) SUBMITTED BY TRUSS MFR.

(120912--Anderson Truss Co. -Patel Residence -- Lot 1 Hills Of Windsor , ** - CJ12)

Top chord 2x4 SP_#2__12A
Bot chord 2x4 SP_#2__12A
Webs 2x4 SP_#2__12A

Lumber grades designated with "12A" use design values approved 1/5/2012 by ALSC.

120 mph wind, 28.32 ft mean hgt, ASCE 7-10, CLOSED bldg, Located anywhere in roof, RISK CAT II, EXP B, wind TC DL=5.0 psf, wind BC DL=5.0 psf. GCpi(+/-)=0.18

Wind loads and reactions based on MWFRS with additional C&C member design.

Left end vertical not exposed to wind pressure.

Special loads
------(Lumber Dur.Fac.=1.25 / Plate Dur.Fac.=1.25)

TC- From	0 plf at	-2.50 to	62 plf at	0.00
TC- From	2 plf at	0.00 to	2 plf at	1.54
TC- From	0 plf at	1.54 to	68 plf at	4.04
BC- From	0 plf at	-2.50 to	4 plf at	0.00
BC- From	2 plf at	0.00 to	2 plf at	2.19

Bottom chord checked for 10.00 psf non-concurrent live load.

Deflection meets L/360 live and L/240 total load. Creep increase factor for dead load is 1.50.

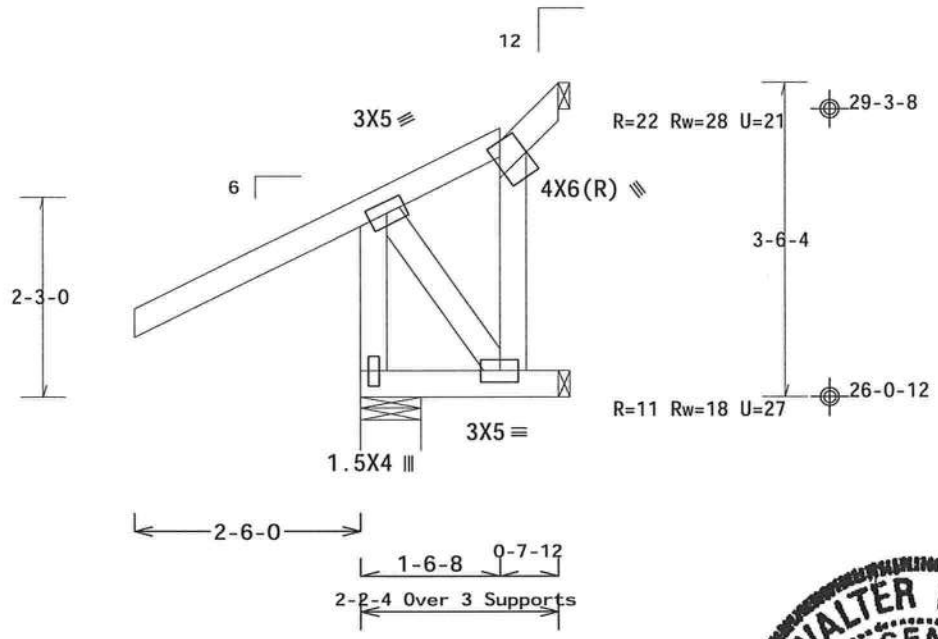

Design Crit: FBC2010Res/TPI-2007(STD)
FT/RT=20%(0%)/10(0)

PLT TYP. Wave

10.03.10.12.23.70 QTY: FL/-/5/-/-/R/- Scale =.5"/Ft.

WALTER P. FINN LICENSE No.22839 STATE OF FLORIDA PROFESSIONAL ENGINEER

12/19/2012

ALPINE
ITW Building Components Group Inc.
Haines City, FL 33844
FL COA #0 278

WARNING READ AND FOLLOW ALL NOTES ON THIS SHEET!
IMPORTANT FURNISH THIS DESIGN TO ALL CONTRACTORS INCLUDING INSTALLERS.

Trusses require extreme care in fabricating, handling, shipping, installing and bracing. Refer to and follow the latest edition of BCSI (Building Component Safety Information, by TPI and WTCA) for standard practices prior to performing these functions. Installers shall provide temporary bracing per BCSI. Unless noted otherwise, top chord shall have properly attached structural sheathing and bottom chord shall have a properly attached rigid ceiling. Locations shown for permanent lateral restraint of webs shall have bracing installed per BCSI sections B3, B7 or B10, as applicable.

ITW Building Components Group Inc. (ITWBCG) shall not be responsible for any deviation from this design, any failure to build the truss in conformance with ANSI/TPI 1, or for handling, shipping, installation & bracing of trusses. Apply plates to each face of truss and position as shown above and on the Joint Details, unless noted otherwise. Refer to drawings 160A-Z for standard plate positions. A seal on this drawing or cover page listing this drawing, indicates acceptance of professional engineering responsibility solely for the design shown. The suitability and use of this design for any structure is the responsibility of the Building Designer per ANSI/TPI 1 Sec.2. For more information see: This job's general notes page; ITW-BCG: www.itwbcg.com; TPI: www.tpinst.org; WTCA: www.sbcindustry.com; ICC: www.iccsafe.org

TC LL	20.0 PSF	REF	R9114- 87278
TC DL	10.0 PSF	DATE	12/19/12
BC DL	10.0 PSF	DRW	HCUSR9114 12354116
BC LL	0.0 PSF	HC-ENG	SSB/WPF
TOT.LD.	40.0 PSF	SEQN-	285603
DUR.FAC.	1.25	FROM	SDY
SPACING	24.0"	JREF-	1US59114Z05

STRONGBACK BRIDGING RECOMMENDATIONS

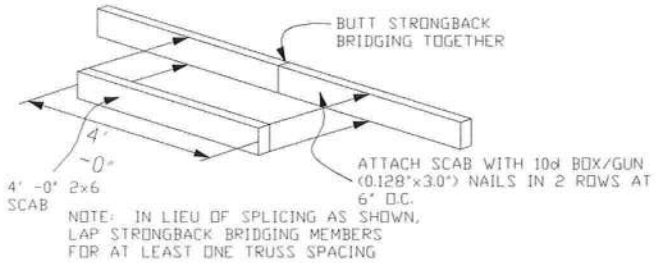

STRONGBACK BRIDGING SPLICE DETAIL

NOTE: Details 1 and 2 are the preferred attachment methods

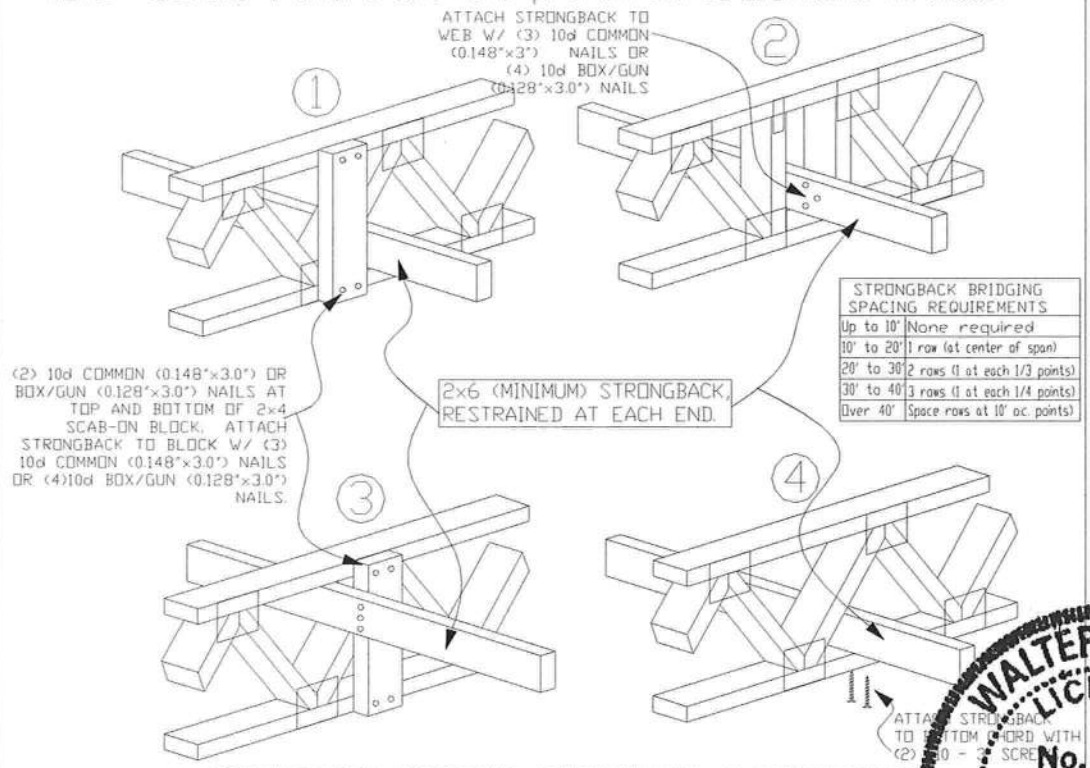

STRONGBACK BRIDGING SPACING REQUIREMENTS	
Up to 10'	None required
10' to 20'	1 row (at center of span)
20' to 30'	2 rows (1 at each 1/3 points)
30' to 40'	3 rows (1 at each 1/4 points)
Over 40'	Space rows at 10' o.c. points)

STRONGBACK BRIDGING ATTACHMENT ALTERNATIVES

- All scab-on blocks shall be a minimum 2x4 "stress graded lumber."
- All strongback bridging and bracing shall be a minimum 2x6 "stress graded lumber."
- The purpose of strongback bridging is to develop load sharing between individual trusses, resulting in an overall increase in the stiffness of the floor system. 2x6 strongback bridging, positioned as shown in details, is recommended at 10' -0" o.c. (max.)

The terms "bridging" and "bracing" are sometimes mistakenly used interchangeably. "Bracing" is an important structural requirement of any floor or roof system. Refer to the Truss Design Drawing (TDD) for the bracing requirements for each individual truss component. "Bridging," particularly "strongback bridging" is a recommendation for a truss system to help control vibration. In addition to aiding in the distribution of point loads between adjacent truss, strongback bridging serves to reduce "bounce" or residual vibration resulting from moving point loads, such as footsteps.

The performance of all floor systems are enhanced by the installation of strongback bridging and therefore is strongly recommended by ITW Building Compents Group Inc.

For additional information regarding strongback bridging, refer to BCSI (Building Component Safety Information).

WALTER P. FINN LICENSE No. 22839 STATE OF FLORIDA PROFESSIONAL ENGINEER

12/19/2012

Dec 19 '12

ITW Building Components Group Inc.

Earth City, MO 63045

WARNING READ AND FOLLOW ALL NOTES ON THIS SHEET!
Trusses require extreme care in fabricating, handling, shipping, installing and bracing. Refer to and follow BCSI (Building Component Safety Information, by TPI and WTCA) for safety practices prior to performing these functions. Installers shall provide temporary bracing per BCSI. Unless noted otherwise, top chord shall have properly attached structural panels and bottom chord shall have properly attached rigid ceiling. Locations shown for permanent lateral restraint of webs shall have bracing installed per BCSI sections B3 & B7. See this job's general notes page for more info.

IMPORTANT FURNISH COPY OF THIS DESIGN TO INSTALLATION CONTRACTOR.
ITW Building Components Group Inc. (ITWBCG) shall not be responsible for any deviation from this design, any failure to build the truss in conformance with TPI, or fabricating, handling, shipping, installing & bracing of trusses. ITWBCG connector plates are made of 20/18/16GA (W,H/S/K) ASTM A653 grade 37/40/60 (K/W/H,S) galv. steel. Apply plates to each face of truss, positioned as shown above and on Joint Details.
A seal on this drawing or cover page indicates acceptance and professional engineering responsibility solely for the truss component design shown. The suitability and use of this component for any building is the responsibility of the Building Designer per ANSI/TPI 1 Sec 2.
ITW-BCG: www.itwbcg.com; TPI: www.tpinst.com; WTCA: www.sbcindustry.com; ICC: www.iccsafe.org

TC LL	PSF	REF STRONGBACK
TC DL	PSF	DATE 2/28/11
BC DL	PSF	DRWG STRBRIBR0211
BC LL	PSF	
TOT. L.D.	PSF	
DUR. FAC.	1.00	
SPACING		

SYSTEM 42 PLY TO PLY CONNECTION DETAIL

USING SIMPSON 1/4" × 6" STRONG DRIVE SCREWS OR EQUAL.

MAX. CONCENTRATED LOAD
AS PER CHART BELOW

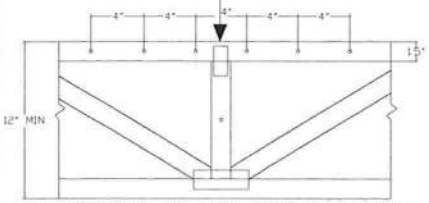

-6 SCREWS IN TOP CHORD @ 4"O.C.
-SCREWS IN VERTICAL WEB @ 4"O.C.
AND 3" END DISTANCE

REFER TO ITWBCG SEALED DRAWING
FOR INDIVIDUAL TRUSS DESIGN.

LOAD APPLIED TO THIS PLY

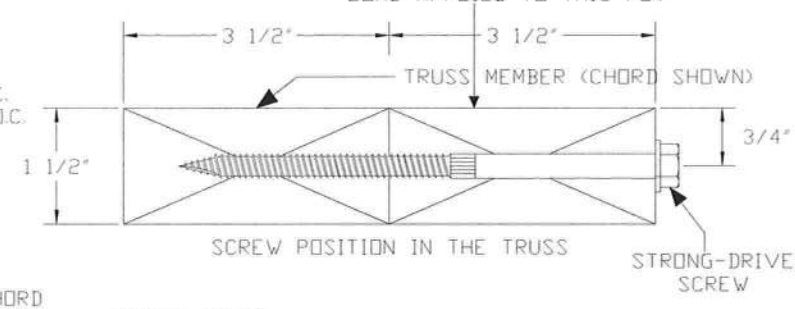

MAX. UNIFORM LOAD
AS PER CHART BELOW

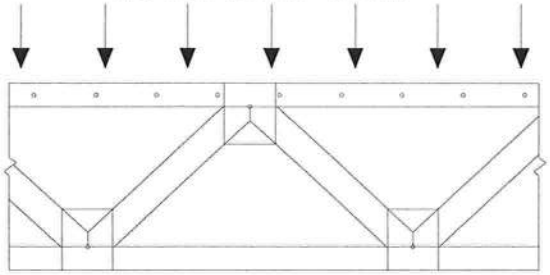

TOP CHORD SCREW SPACING PER CHART BELOW
(FOR SINGLE TOP CHORD ONLY)

FOR DOUBLE TOP CHORDS
USE (4) SCREWS IN UPPER TOP CHORD
USE (2) SCREWS IN LOWER TOP CHORD

MAX. CONCENTRATED LOAD
AS PER CHART BELOW

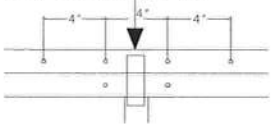

SCREWS CAN BE EQUALLY DIVIDED (ROUND UP TO THE NEAREST WHOLE NUMBER) INTO MULTIPLE VERTICALS. USE A MINIMUM OF (1) SCREW PER VERTICAL.

GENERAL NOTES:

1. SCREWS CENTERED ALONG THE 1.5" DIMENSION OF THE 4×2 MEMBER.
2. MINIMUM END DISTANCE OF 3"
3. SCREWS INSTALLED WITH HEAD IN LOADED MEMBER.
4. GAP BETWEEN PLIES NOT TO EXCEED 1/8".
5. HOLES NOT ALLOWED THRU A METAL CONNECTOR PLATE
6. SCREW LOCATION MAY BE ADJUSTED UP TO 1" TO AVOID CONFLICT WITH OTHER HARDWARE OR TO AVOID LUMBER DEFECTS.
7. DO NOT INSTALL SCREWS IN AREAS WHERE LUMBER WANE EXCEEDS 1/4"
8. CONCENTRATED LOADS TO BE APPLIED AT TRUSS PANEL POINT WITH VERTICAL WEB.
9. FLOOR SHEATHING IS ASSUMED TO BE SECURELY FASTENED TO EACH TRUSS TOP CHORD.
10. FOR 3×2 MEMBERS USE SIMPSON'S 1/4"×4.5" SDS SCREWS OR EQUAL.
11. CONTACT ITWBCG FOR SPECIAL CONNECTIONS NOT COVERED BY THIS DETAIL.

UNIFORM LOADS

FOR DOUBLE TOP CHORD THE TOP CHORD SCREW O.C. SPACING MAY BE DOUBLED. (BUT MAY NOT EXCEED 24" O.C. PER CHORD) SCREW SPACING SHALL BE OFFSET BY 1/2 THE O.C. SPACING IN EACH CHORD.

TRUSS DEPTH (INCH)	# OF SCREWS IN VERTICAL WEB	MAXIMUM CONCENTRATED LOAD (LBS)	
		DFL&SP	SPF
12	1	3360	2800
14	2	3840	3200
16	2	3840	3200
18	4	4320	3600
20	4	4320	3600
22	5	4800	4000
24	5	4800	4000

TOP CHORD SCREW O.C. SPACING (INCH)	MAXIMUM UNIFORM LOAD (PLF) ALONG TOP CHORD (1.00 DF)	
	DFL&SP	SPF
4	1440	1200
6	960	800
8	720	600
10	576	480
12	480	400
14	411	342
16	360	300
18	320	266
20	288	240
22	261	218
24	240	200

WALTER P. FINN
LICENSE
No. 22839
STATE OF FLORIDA
PROFESSIONAL ENGINEER

12/19/2012
Dec 19 '12

ITW
Building Components Group Inc.

Earth City, MO 63045

WARNING READ AND FOLLOW ALL NOTES ON THIS SHEET!
Trusses require extreme care in fabricating, handling, shipping, installing and bracing. Refer to and follow BCSI (Building Component Safety Information, by TPI and WTCA) for safety practices for to performing these functions. Installers shall provide temporary bracing per BCSI. Unless n otherwise, top chord shall have properly attached structural panels and bottom chord sha properly attached rigid ceiling. Locations shown for permanent lateral restraint of webs sh bracing installed per BCSI sections B3 & B7. See this job's general notes page for more inf

IMPORTANT FURNISH COPY OF THIS DESIGN TO INSTALLATION CONTRACTOR.
ITW Building Components Group Inc. (ITWBCG) shall not be responsible for any deviation from this design, any failure to build the truss in conformance with TPI, or fabricating, handling, shipping, installing & bracing of trusses. ITWBCG connector plates are made of 20/18/16GA (W,H/S/K) ASTM A653 grade 37/40/60 (K/W/H,S) galv. steel. Apply plates to each face of truss, positioned as shown above and on Joint Details.
A seal on this drawing or cover page indicates acceptance and professional engineering responsibility solely for the truss component design shown. The suitability and use of this component for any building is the responsibility of the Building Designer per ANSI/TPI 1 Sec. 2.
ITW-BCG: www.itwbcg.com; TPI: www.tpinst.com; WTCA: www.sbcindustry.com; ICC: www.iccsafe.org

TC LL	PSF	REF SY42 CONNECTION
TC DL	PSF	DATE 1/1/09
BC DL	PSF	DRWG CNSY42PL0109
BC LL	PSF	
TOT. LD.	PSF	
DUR. FAC.	1.00	
SPACING		

CLB WEB BRACE SUBSTITUTION

THIS DETAIL IS TO BE USED WHEN CONTINUOUS LATERAL BRACING (CLB) IS SPECIFIED ON A TRUSS DESIGN BUT AN ALTERNATIVE WEB BRACING METHOD IS DESIRED.

NOTES:

THIS DETAIL IS ONLY APPLICABLE FOR CHANGING THE SPECIFIED CLB SHOWN ON SINGLE PLY SEALED DESIGNS TO T-BRACING OR SCAB BRACING.

ALTERNATIVE BRACING SPECIFIED IN CHART BELOW MAY BE CONSERVATIVE. FOR MINIMUM ALTERNATIVE BRACING, RE-RUN DESIGN WITH APPROPRIATE BRACING.

WEB MEMBER SIZE	SPECIFIED CLB BRACING	ALTERNATIVE BRACING T OR L-BRACE	ALTERNATIVE BRACING SCAB BRACE
2X3 OR 2X4	1 ROW	2X4	1-2X4
2X3 OR 2X4	2 ROWS	2X6	2-2X4
2X6	1 ROW	2X4	1-2X6
2X6	2 ROWS	2X6	2-2X4(*)
2X8	1 ROW	2X6	1-2X8
2X8	2 ROWS	2X6	2-2X6(*)

T-BRACE, L-BRACE AND SCAB BRACE TO BE SAME SPECIES AND GRADE OR BETTER THAN WEB MEMBER UNLESS SPECIFIED OTHERWISE ON ENGINEER'S SEALED DESIGN.

(*) CENTER SCAB ON WIDE FACE OF WEB. APPLY (1) SCAB TO EACH FACE OF WEB.

T-BRACING OR L-BRACING:

APPLY TO EITHER SIDE OF WEB NARROW FACE.
ATTACH WITH 10d BOX OR GUN (0.128"x 3.",MIN) NAILS.
AT 6" O.C.
BRACE IS A MINIMUM 80% OF WEB MEMBER LENGTH

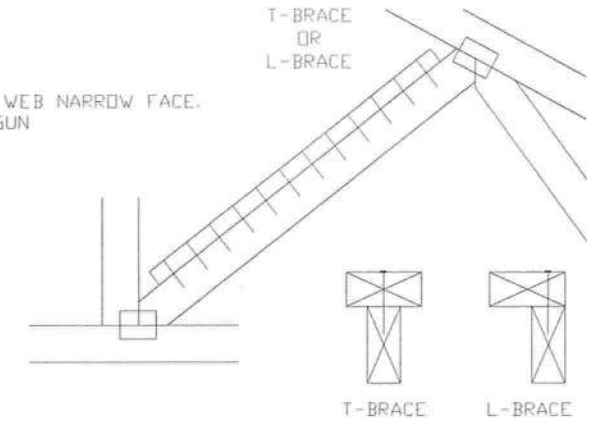

SCAB BRACING:

APPLY SCAB(S) TO WIDE FACE OF WEB.
NO MORE THAN (1) SCAB PER FACE.
ATTACH WITH 10d BOX OR GUN (0.128"x 3.",MIN) NAILS.
AT 6" O.C.
BRACE IS A MINIMUM 80% OF WEB MEMBER LENGTH

WALTER P. FINN
LICENSE
No.22839
STATE OF FLORIDA
PROFESSIONAL ENGINEER
12/19/2012

TW
Building Components Group Inc.
Earth City, MO 63045

WARNING READ AND FOLLOW ALL NOTES ON THIS SHEET!
Trusses require extreme care in fabricating, handling, shipping, installing and bracing. Refer and follow BCSI (Building Component Safety Information, by TPI and WTCA) for safety practices pr performing these functions. Installers shall provide temporary bracing per BCSI. Unless note otherwise, top chord shall have properly attached structural panels and bottom chord shall properly attached rigid ceiling. Locations shown for permanent lateral restraint of webs shall bracing installed per BCSI sections B3 & B7. See this job's general notes page for more inform

IMPORTANT FURNISH COPY OF THIS DESIGN TO INSTALLATION CONTRACTOR.
ITW Building Components Group Inc. (ITWBCG) shall not be responsible for any deviation from this design, any failure to build the truss in conformance with TPI, or fabricating, handling, shipping, installing & bracing of trusses. ITWBCG connector plates are made of 20/18/16GA (W,H/S/K) ASTM A653 grade 37/40/60 (K/W/H,S) galv. steel. Apply plates to each face of truss, positioned as shown above and on Joint Details.
A seal on this drawing or cover page indicates acceptance and professional engineering responsibility solely for the truss component design shown. The suitability and use of this component for any building is the responsibility of the Building Designer per ANSI/TPI 1 Sec. 2.
ITW-BCG: www.itwbcg.com; TPI: www.tpinst.com; WTCA: www.sbcindustry.com; ICC: www.iccsafe.org

Dec 19 '12

TC LL	PSF	REF CLB SUBST.
TC DL	PSF	DATE 1/1/09
BC DL	PSF	DRWG BRCLBSUB0109
BC LL	PSF	
TOT. LD.	PSF	
DUR. FAC.		
SPACING		

Piggyback Detail - ASCE 7-10: 160 mph, 30' Mean Height, Enclosed, Exposure C, Kzt=1.00

160 mph Wind, 30.00 ft Mean Hgt, ASCE 7-10, Enclosed Bldg. located anywhere in roof, Exp C, Wind DL= 5.0 psf (min), Kzt=1.0.
Or 140 mph wind, 30.00 ft Mean Hgt, ASCE 7-10, Enclosed Bldg. located anywhere in roof, Exp D, wind DL= 5.0 psf (min), Kzt=1.0.

Note: Top chords of trusses supporting piggyback cap trusses must be adequately braced by sheathing or purlins. The building Engineer of Record shall provide diagonal bracing or any other suitable anchorage to permanently restrain purlins, and lateral bracing for out of plane loads over gable ends.

Maximum truss spacing is 24" o.c. detail is not applicable if cap supports additional loads such as cupola, steeple, chimney or drag strut loads.

** Refer to Engineer's sealed truss design drawing for piggyback and base truss specifications.

Detail A : Purlin Spacing = 24" o.c. or less

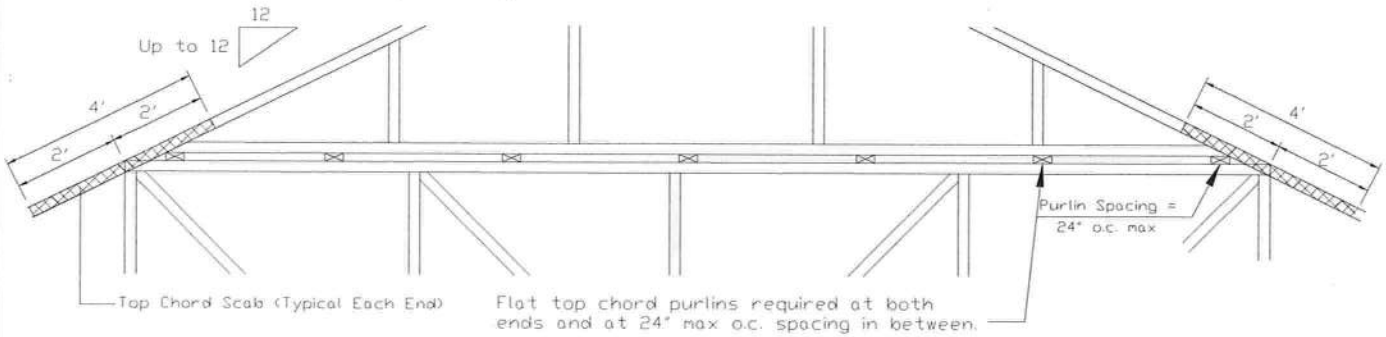

Piggyback cap truss slant nailed to all top chord purlin bracing with (2) 16d box nails (0.135"x3.5") and secure top chord with 2x4 #3 grade scab (1 side only at each end) attached with 2 rows of 10d box nails (0.128"x3") at 4" o.c.

Attach purlin bracing to the flat top chord using (2) 16d box nails (0.135"x3.5").

The top chord #3 grade 2x4 scab may be replaced with either of the following: (1) 3X8 Trulox plate attached with (8) 0.120"x1.375" nails, (4) into cap TC & (4) into base truss TC or (1) 28PB wave piggyback plate plated to the piggyback truss TC and attached to the base truss TC with (4) 0.120"x1.375" nails. Note: Nailing thru holes of wave plate is acceptable.

Detail B : Purlin Spacing > 24" o.c.

Piggyback cap truss slant nailed to all top chord purlin bracing with (2) 16d box nails (0.135"x3.5") and secure top chord with 2x4 #3 grade scab (1 side only at each end) attached with 2 rows of 10d box nails (0.128"x3") at 4" o.c.

Attach purlin bracing to the flat top chord using a minimum of (2) 16d box nails (0.135"x3.5").

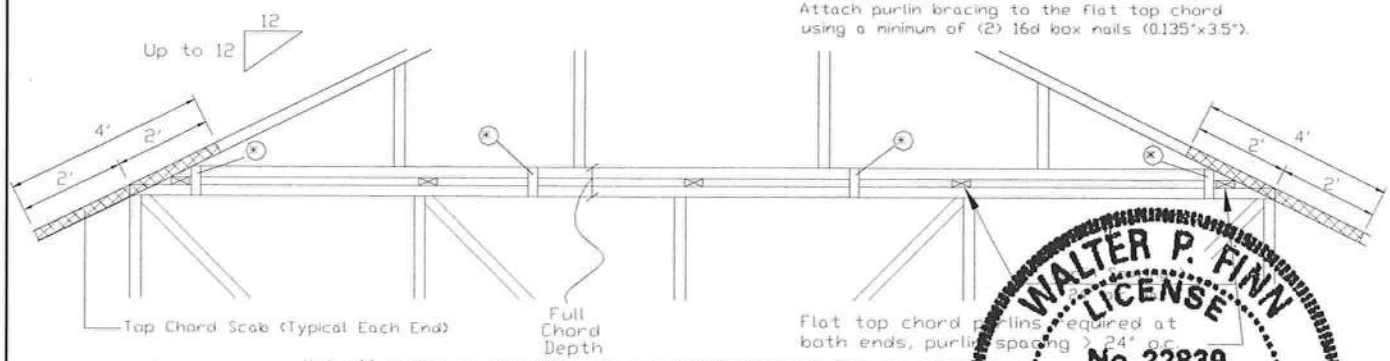

Note: If purlins or sheathing are not specified on the flat top of the base truss, purlins must be installed at 24" o.c. max. and use Detail

* In addition, provide connection with one of the following methods:

Trulox
Use 3X8 Trulox plates for 2x4 chord member, and 3X10 Trulox plates for 2x6 and larger chord members. Attach to each face @ 8" o.c. with (4) 0.120"x1.375" nails into cap bottom chord and (4) in base truss top chord. Trulox plates may be staggered 4" o.c. front to back faces.

APA Rated Gusset
8"x8"x7/16" (min) APA rated sheathing gussets (each face). Attach @ 8" o.c. with (8) 6d common (0.113"x2") nails per gusset, (4) in cap bottom chord and (4) in base truss top chord. Gussets may be staggered 4" o.c. front to back faces.

2x4 Vertical Scabs
2x4 SPF #2, full chord depth scabs (each face). Attach @ 8" o.c. with (6) 10d box nails (0.128"x3") per scab, (3) in cap bottom chord and (3) in base truss top chord. Scabs may be staggered 4" o.c. front to back faces.

28PB Wave Piggyback Plate
One 28PB wave piggyback plate to each face @ 8" o.c. Attach teeth to piggyback at time of fabrication. Attach to supporting truss with (4) 0.120"x1.375" nails per face per ply. Piggyback plates may be staggered 4" o.c. front to back faces.

WALTER P. FINN
LICENSE
No. 22839
STATE OF FLORIDA
PROFESSIONAL ENGINEER

12/19/2012

Dec 19 '12

ITW Building Components Group Inc.

Earth City, MO 63045

WARNING! READ AND FOLLOW ALL NOTES ON THIS DRAWING!
IMPORTANT FURNISH THIS DRAWING TO ALL CONTRACTORS INCLUDING THE INSTALLERS.

Trusses require extreme care in fabricating, handling, shipping, installing and bracing. Refer to and follow the latest edition of BCSI (Building Component Safety Information, by TPI and WTCA) for general practices prior to performing these functions. Installers shall provide temporary bracing per BCSI. Unless noted otherwise, top chord shall have properly attached structural sheathing and bottom chord shall have a properly attached rigid ceiling. Locations shown for permanent lateral restraint of webs shall have bracing installed per BCSI sections B3, B7 or B10, as applicable. Apply plates each face of truss and position as shown above and on the Joint Details, unless noted otherwise. Refer to drawings 160A-Z for standard plate positions.

ITW Building Components Group Inc. shall not be responsible for any deviation from this drawing, any failure to build the truss in conformance with ANSI/TPI 1, or for handling, shipping, installation & bracing of trusses. A seal on this drawing or cover page listing this drawing, indicates acceptance of professional engineering responsibility solely for the design shown. The suitability and use of this drawing for any structure is the responsibility of the Building Designer per ANSI/TPI 1 Sec.2.
For more information see this job's general notes page and these web sites:
ITWBCG: www.itwbcg.com; TPI: www.tpinst.org; WTCA: www.sbcindustry.org; ICC: www.iccsafe.or

SPACING 24.0"

REF	PIGGYBACK
DATE	2/14/12
DRWG	PB160100212

Gable Stud Reinforcement Detail

ASCE 7-10: 120 mph Wind Speed, 30' Mean Height, Enclosed, Exposure C, Kzt = 1.00

Or: 100 Mph Wind Speed, 30' Mean Height, Partially Enclosed, Exposure C, Kzt = 1.00
Or: 100 mph Wind Speed, 30' Mean Height, Enclosed, Exposure D, Kzt = 1.00

Max Gable Vertical Length

2x4 Gable Vertical Spacing	Species	Brace Grade	No Braces	(1) 1x4 "L" Brace * Group A	(1) 1x4 "L" Brace * Group B	(1) 2x4 "L" Brace * Group A	(1) 2x4 "L" Brace * Group B	(2) 2x4 "L" Brace ** Group A	(2) 2x4 "L" Brace ** Group B	(1) 2x6 "L" Brace * Group A	(1) 2x6 "L" Brace * Group B	(2) 2x6 "L" Brace ** Group A	(2) 2x6 "L" Brace ** Group B
24" o.c.	SPF HF	#1 / #2	4' 7"	7' 10"	8' 1"	9' 3"	9' 7"	11' 0"	11' 5"	14' 0"	14' 0"	14' 0"	14' 0"
		#3	4' 4"	7' 2"	7' 8"	9' 1"	9' 5"	10' 10"	11' 4"	14' 0"	14' 0"	14' 0"	14' 0"
		Stud	4' 4"	7' 8"	8' 0"	9' 1"	9' 5"	10' 10"	11' 4"	14' 0"	14' 0"	14' 0"	14' 0"
		Standard	4' 4"	7' 6"	8' 0"	9' 1"	9' 5"	10' 10"	11' 4"	14' 0"	14' 0"	14' 0"	14' 0"
	SP DFL	#1	4' 8"	7' 10"	8' 2"	9' 3"	9' 8"	11' 0"	11' 6"	14' 0"	14' 0"	14' 0"	14' 0"
		#2	4' 7"	7' 10"	8' 1"	9' 3"	9' 7"	11' 0"	11' 5"	14' 0"	14' 0"	14' 0"	14' 0"
		#3	4' 4"	6' 5"	6' 10"	8' 7"	9' 2"	10' 10"	11' 4"	13' 5"	14' 0"	14' 0"	14' 0"
		Stud	4' 4"	6' 5"	6' 10"	8' 7"	9' 2"	10' 10"	11' 4"	13' 5"	14' 0"	14' 0"	14' 0"
		Standard	4' 3"	5' 7"	5' 11"	7' 5"	7' 11"	10' 0"	10' 9"	11' 8"	12' 5"	14' 0"	14' 0"
16" o.c.	SPF HF	#1 / #2	5' 3"	8' 11"	9' 3"	10' 7"	11' 0"	12' 7"	13' 1"	14' 0"	14' 0"	14' 0"	14' 0"
		#3	5' 0"	8' 10"	9' 3"	10' 5"	10' 10"	12' 5"	12' 11"	14' 0"	14' 0"	14' 0"	14' 0"
		Stud	5' 0"	8' 10"	9' 2"	10' 5"	10' 10"	12' 5"	12' 11"	14' 0"	14' 0"	14' 0"	14' 0"
		Standard	5' 0"	8' 10"	9' 2"	10' 5"	10' 10"	12' 5"	12' 11"	14' 0"	14' 0"	14' 0"	14' 0"
	SP DFL	#1	5' 4"	9' 0"	9' 4"	10' 7"	11' 0"	12' 8"	13' 2"	14' 0"	14' 0"	14' 0"	14' 0"
		#2	5' 3"	8' 11"	9' 3"	10' 7"	11' 0"	12' 7"	13' 1"	14' 0"	14' 0"	14' 0"	14' 0"
		#3	5' 0"	7' 10"	8' 4"	10' 5"	10' 10"	12' 5"	12' 11"	14' 0"	14' 0"	14' 0"	14' 0"
		Stud	5' 0"	7' 10"	8' 4"	10' 5"	10' 10"	12' 5"	12' 11"	14' 0"	14' 0"	14' 0"	14' 0"
		Standard	5' 0"	6' 10"	7' 3"	9' 1"	9' 8"	12' 4"	12' 11"	14' 0"	14' 0"	14' 0"	14' 0"
12" o.c.	SPF HF	#1 / #2	5' 9"	9' 10"	10' 2"	11' 7"	12' 1"	12' 7"	14' 0"	14' 0"	14' 0"	14' 0"	14' 0"
		#3	5' 6"	9' 8"	10' 1"	11' 6"	11' 11"	13' 8"	14' 0"	14' 0"	14' 0"	14' 0"	14' 0"
		Stud	5' 6"	9' 8"	10' 1"	11' 6"	11' 11"	13' 8"	14' 0"	14' 0"	14' 0"	14' 0"	14' 0"
		Standard	5' 6"	9' 8"	10' 1"	11' 6"	11' 11"	13' 8"	14' 0"	14' 0"	14' 0"	14' 0"	14' 0"
	SP DFL	#1	5' 11"	9' 11"	10' 3"	11' 8"	12' 2"	13' 11"	14' 0"	14' 0"	14' 0"	14' 0"	14' 0"
		#2	5' 9"	9' 10"	10' 2"	11' 7"	12' 1"	13' 10"	14' 0"	14' 0"	14' 0"	14' 0"	14' 0"
		#3	5' 6"	9' 1"	9' 8"	11' 6"	11' 11"	13' 8"	14' 0"	14' 0"	14' 0"	14' 0"	14' 0"
		Stud	5' 6"	9' 1"	9' 8"	11' 6"	11' 11"	13' 8"	14' 0"	14' 0"	14' 0"	14' 0"	14' 0"
		Standard	5' 6"	7' 10"	8' 4"	10' 6"	11' 3"	13' 8"	14' 0"	14' 0"	14' 0"	14' 0"	14' 0"

Bracing Group Species and Grades:

Group A:

Spruce-Pine-Fir	
#1 / #2	Standard
#3	Stud

Hem-Fir	
#2	Stud
#3	Standard

Douglas Fir-Larch
#3
Stud
Standard

Southern Pine***
#3
Stud
Standard

Group B:

Hem-Fir
#1 & Btr
#1

Douglas Fir-Larch
#1
#2

Southern Pine***
#1
#2

1x4 Braces shall be SRB (Stress-Rated Board).

***For 1x4 Sp. Pine use only Industrial 55 or Industrial 45 Stress-Rated Boards. Group B values may be used with these grades.

Gable Truss Detail Notes:

Wind Load deflection criterion is L/240.

Provide uplift connections for 70 plf over continuous bearing (5 psf TC Dead Load).

Gable end supports load from 4' 0" outlookers with 2' 0" overhang, or 12" plywood overhang.

Sp. Pine lumber design values based on the AISC January, 2012 rulin

Attach "L" braces with 10d (0.128"x3.0" min) nails.

* For (1) "L" brace: space nails at 2" o.c. in 18" end zones and 4" o.c. between zones.

**For (2) "L" braces: space nails at 3" o.c. in 18" end zones and 6" o.c. between zones.

"L" bracing must be a minimum of 80% of web member length.

Gable Vertical Plate Sizes	
Vertical Length	No Splice
Less than 4' 0"	1X4 or 2X3
Greater than 4' 0", but less than 11' 6"	2X4
Greather than 11' 6"	2.5X4

* Refer to common truss design for peak, splice, and heel plates.

Refer to the Building Designer for conditions not addressed by this detail.

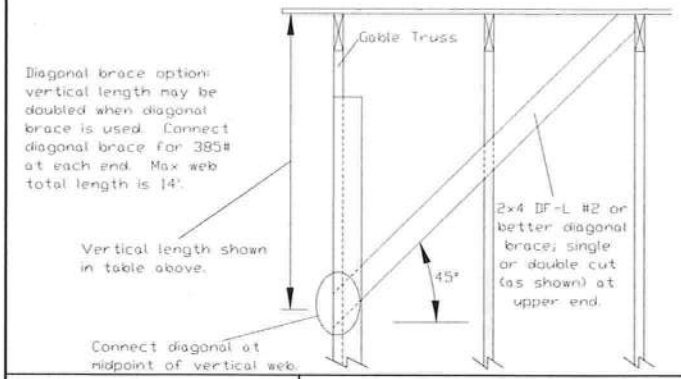

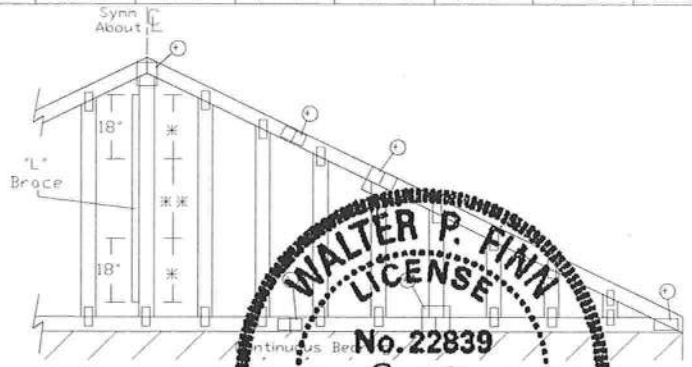

WALTER P. FINN LICENSE No. 22839 STATE OF FLORIDA PROFESSIONAL ENGINEER

12/19/2012

Dec 19 '12

ITW Building Components Group Inc.

Earth City, MO 63045

WARNING! READ AND FOLLOW ALL NOTES ON THIS DRAWING!
IMPORTANT FURNISH THIS DRAWING TO ALL CONTRACTORS INCLUDING THE INSTALLERS.

Trusses require extreme care in fabricating, handling, shipping, installing and bracing. Refer to follow the latest edition of BCSI (Building Component Safety Information, by TPI and WTCA) for practices prior to performing these functions. Installers shall provide temporary bracing per Unless noted otherwise, top chord shall have properly attached structural sheathing and bottom chord shall have a properly attached rigid ceiling. Locations shown for permanent lateral restraint of webs shall have bracing installed per BCSI sections B3, B7 or B10, as applicable. Apply plates to each face of truss and position as shown above and on the Joint Details, unless noted otherwise. Refer to drawings 160A-Z for standard plate positions.

ITW Building Components Group Inc. shall not be responsible for any deviation from this drawing, any failure to build the truss in conformance with ANSI/TPI 1, or for handling, shipping, installation & bracing of trusses. A seal on this drawing or cover page listing this drawing, indicates acceptance of professional engineering responsibility solely for the design shown. The suitability and use of this drawing for any structure is the responsibility of the Building Designer per ANSI/TPI 1 Sec.2. For more information see this job's general notes page and these web sites:
ITWBCG: www.itwbcg.com; TPI: www.tpinst.org; WTCA: www.sbcindustry.org; ICC: www.iccsafe.org

MAX. TOT. LD. 60 PSF

MAX. SPACING 24.0"

REF ASCE7-10-GAB12030
DATE 2/14/12
DRWG A12030ENC100212

Gable Detail

For Let-in Verticals

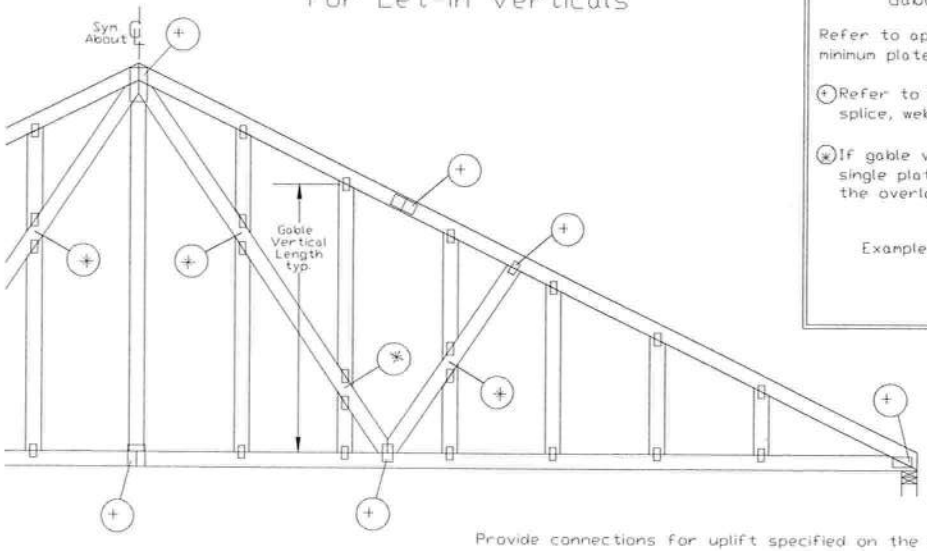

Gable Truss Plate Sizes

Refer to appropriate ITW gable detail for minimum plate sizes for vertical studs.

(+) Refer to Engineered truss design for peak, splice, web, and heel plates.

(*) If gable vertical plates overlap, use a single plate that covers the total area of the overlapped plates to span the web.

Example:

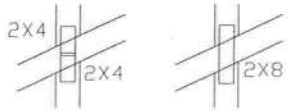

"T" Reinforcement Attachment Detail

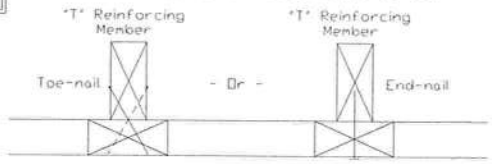

Provide connections for uplift specified on the engineered truss design.

Attach each "T" reinforcing member with

End Driven Nails:
10d Common (0.148"x 3",min) Nails at 4" o.c. plus
(4) nails in the top and bottom chords.

Toenailed Nails:
10d Common (0.148"x3",min) Toenails at 4" o.c. plus
(4) toenails in the top and bottom chords.

This detail to be used with the appropriate ITW gable detail for ASCE wind load.

ASCE 7-98 Gable Detail Drawings
A13015980109, A12015980109, A11015980109, A10015980109,
A13030980109, A12030980109, A11030980109, A10030980109

ASCE 7-02 Gable Detail Drawings
A13015020109, A12015020109, A11015020109, A10015020109, A14015020109,
A13030020109, A12030020109, A11030020109, A10030020109, A14030020109

ASCE 7-05 Gable Detail Drawings
A13015050109, A12015050109, A11015050109, A100150[illegible]050109,
A13030050109, A12030050109, A11030050109, A10[illegible] A14[illegible]

ASCE 7-10 Gable Detail Drawings
A11515ENC100212, A12015ENC100212, A1401[illegible]
A18015ENC100212, A20015ENC100212, A200[illegible]
A11530ENC100212, A12030ENC100212, A1[illegible]30ENC[illegible]0212, A16030ENC[illegible]0212
A18030ENC100212, A20030ENC100212, A[illegible]030EN[illegible]100212, A20030PED100212

See appropriate ITW gable detail for ma[illegible]um u[illegible]reinf[illegible]rtical leng[illegible]

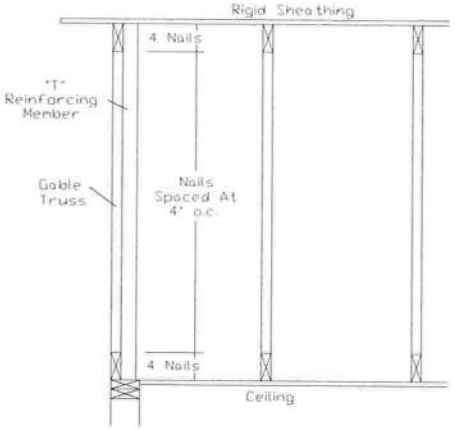

To convert from "L" to "T" reinforcing members, multiply "T" increase by length (based on appropriate ITW gable detail).

Maximum allowable "T" reinforced gable vertical length is 14' from top to bottom chord.

"T" reinforcing member material must match size, specie, and grade of the "L" reinforcing member.

Web Length Increase w/ "T" Brace

"T" Reinf. Mbr. Size	"T" Increase
2x4	30 %
2x6	20 %

Example:
ASCE 7-10 Wind Speed = 120 mph
Mean Roof Height = 30 ft, Kzt = 1.00
Gable Vertical = 24"o.c. SP #3
"T" Reinforcing Member Size = 2x4
"T" Brace Increase (From Above) = 30% = 1.30
(1) 2x4 "L" Brace Length = 8' 7"
Maximum "T" Reinforced Gable Vertical Length
1.30 x 8' 7" = 11' 2"

WALTER P. FINN
LICENSE
No. 22839
STATE OF FLORIDA
PROFESSIONAL ENGINEER

12/19/2012
Dec 19 '12

ITW
Building Components Group Inc.

Earth City, MO 63045

WARNING! READ AND FOLLOW ALL NOTES ON THIS DRAWING!
IMPORTANT FURNISH THIS DRAWING TO ALL CONTRACTORS INCLUDING THE INSTALLERS.

Trusses require extreme care in fabricating, handling, shipping, installing and bracing. Refer to and follow the latest edition of BCSI (Building Component Safety Information, by TPI and WTCA) for recommended practices prior to performing these functions. Installers shall provide temporary bracing per BCSI. Unless noted otherwise, top chord shall have properly attached structural sheathing and bottom chord shall have a properly attached rigid ceiling. Locations shown for permanent lateral restraint of webs shall have bracing installed per BCSI sections B3, B7 or B10, as applicable. Apply plates to each face of truss and position as shown above and on the Joint Details, unless noted otherwise. Refer to drawings 160A-Z for standard plate positions.

ITW Building Components Group Inc. shall not be responsible for any deviation from this drawing, any failure to build the truss in conformance with ANSI/TPI 1, or for handling, shipping, installation & bracing of trusses. A seal on this drawing or cover page listing this drawing, indicates acceptance of professional engineering responsibility solely for the design shown. The suitability and use of this drawing for any structure is the responsibility of the Building Designer per ANSI/TPI 1 Sec.2.
For more information see this job's general notes page and these web sites:
ITWBCG: www.itwbcg.com; TPI: www.tpinst.org; WTCA: www.sbcindustry.org; ICC: www.iccsafe.or

MAX. TOT. LD. 60 PSF
DUR. FAC. ANY
MAX. SPACING 24.0"

REF	LET-IN VERT
DATE	2/16/12
DRWG	GBLLETIN0212

ASCE 7-10: 120 mph, 30' Mean Height, Closed, Exposure C
Common Residential Gable End Wind Bracing Requirements - Stiffeners

120 mph, 30ft. Mean Hgt, ASCE 7-10, Enclosed, Exp C, or
100 mph, 30ft. Mean Hgt, ASCE 7-10, Enclosed, Exp D, or
100 mph, 30ft. Mean Hgt, ASCE 7-10, Part. Enclosed, Exp C,
Kzt = 1.00, Wind TC DL=5.0 psf, Wind BC DL=5.0 psf.

Lateral chord bracing requirements
Top: Continuous roof sheathing
Bot: Continuous ceiling diaphragm

See Engineer's sealed design referencing this detail for lumber, plates, and other information not shown on this detail.

Nails: 10d box or gun (0.128"x3",min) nails.

H Less than 4'6" - no stud bracing required

H Greater than 4'6" to 7'6" in length provide a 2x6 stiffback at mid-height and brace stiffback to roof diaphragm every 6'0" (see detail below or refer to DRWG A12030ENC10).

H Greater than 7'6" to 12'0" max: provide a 2x6 stiffback at mid-height and brace to roof diaphragm every 4'0" (see detail below or refer to DRWG A12030ENC10).

✳ Optional 2x L-reinforcement attached to stiffback with 10d box or gun (0.128" x 3", min.) nails @ 6" o.c.

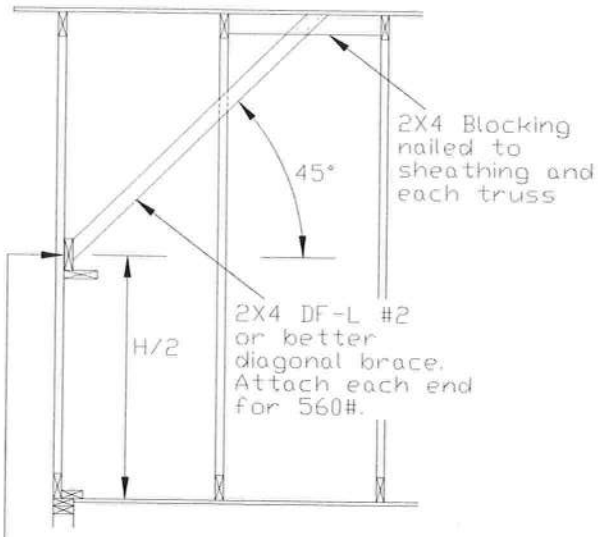

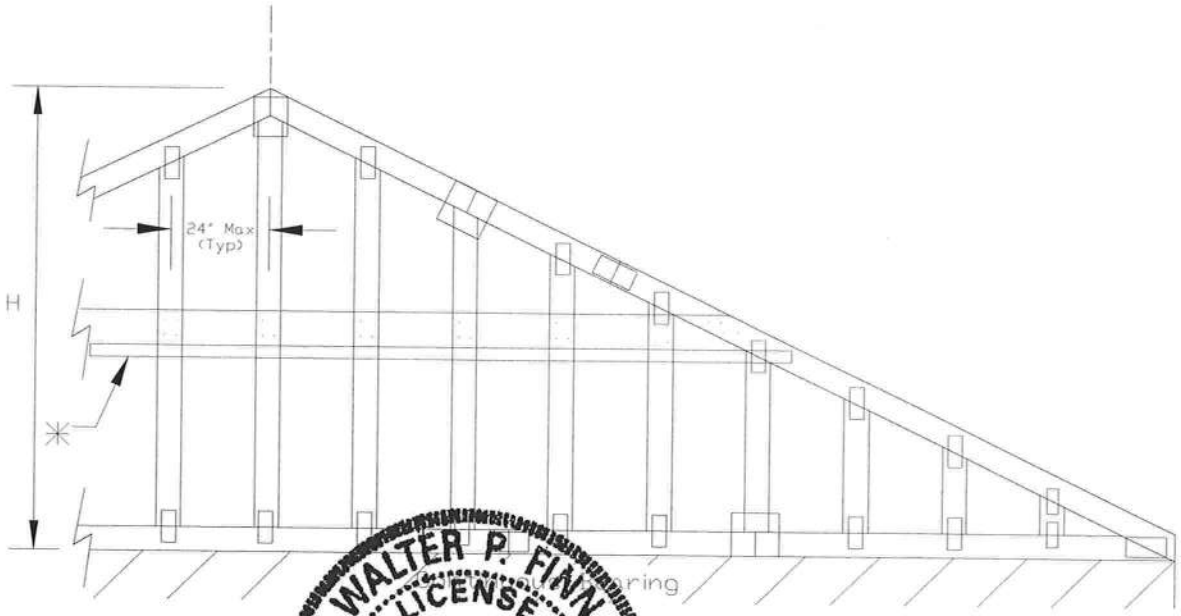

WALTER P. FINN
LICENSE
No. 22839
STATE OF FLORIDA
PROFESSIONAL ENGINEER

12/19/2012
Dec 19 '12

ITW Building Components Group Inc.
Earth City, MO 63045

WARNING! READ AND FOLLOW ALL NOTES ON THIS DRAWING!
IMPORTANT FURNISH THIS DRAWING TO ALL CONTRACTORS INCLUDING THE INSTALLERS.

Trusses require extreme care in fabricating, handling, shipping, installing and bracing. Refer to and follow the latest edition of BCSI (Building Component Safety Information, by TPI and WTCA) for general practices prior to performing these functions. Installers shall provide temporary bracing per BCSI. Unless noted otherwise, top chord shall have properly attached structural sheathing and bottom chord shall have a properly attached rigid ceiling. Locations shown for permanent lateral restraint of webs shall have bracing installed per BCSI sections B3, B7 or B10, as applicable. Apply plates to each face of truss and position as shown above and on the Joint Details, unless noted otherwise. Refer to drawings 160A-Z for standard plate positions.

ITW Building Components Group Inc. shall not be responsible for any deviation from this drawing, any failure to build the truss in conformance with ANSI/TPI 1, or for handling, shipping, installation & bracing of trusses. A seal on this drawing or cover page listing this drawing, indicates acceptance of professional engineering responsibility solely for the design shown. The suitability and use of this drawing for any structure is the responsibility of the Building Designer per ANSI/TPI 1 Sec.2. For more information see this job's general notes page and these web sites: ITWBCG: www.itwbcg.com; TPI: www.tpinst.org; WTCA: www.sbcindustry.org; ICC: www.iccsafe.or

MAX. TOT. LD. 60 PSF

MAX. SPACING

REF	GE WHALER
DATE	2/14/12
DRWG	GABRST100212