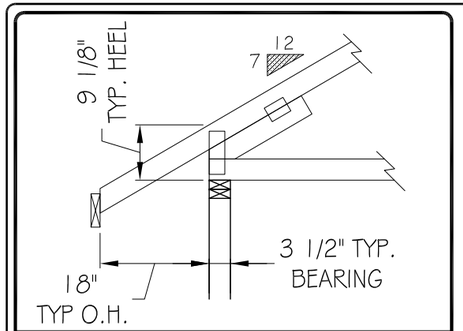

TYPICAL EAVE DETAIL

SYMBOL: ⌋ L
QTY: 5
For Nailing:
See Simpson Catalog
or Call 1-800-999-5099
SIMPSON HUS26

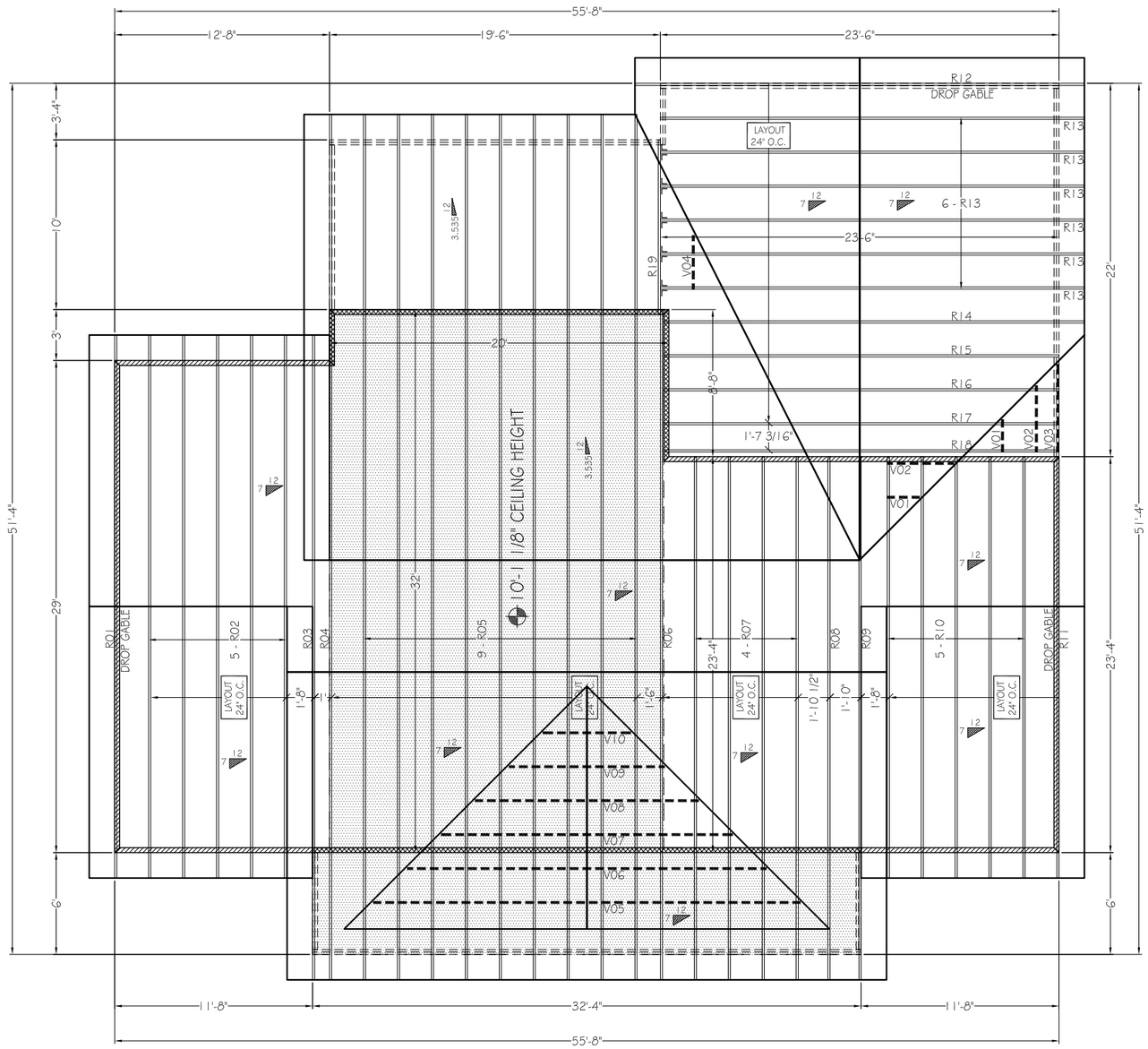

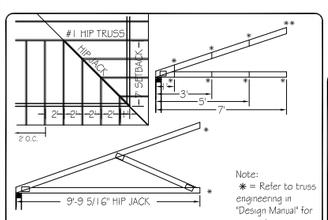

TYPICAL HIP CORNER DETAIL

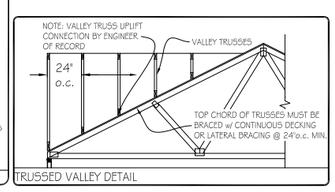

TRUSSED VALLEY DETAIL

LEGEND

- SUPPLIED BEAM
- BEAM BY OTHERS
- VALLEY / FIELD FRAMING
- PLUMBING DROP
- SLOPED CEILING
- RAISED FLAT CEILING
- 9'-1 1/8" BEARING HEIGHT
- 10'-1 1/8" BEARING HEIGHT

"DISCLAIMER"

PLUMBING / HVAC OPENINGS ARE THE RESPONSIBILITY OF THE CONTRACTOR OR OWNER TO VERIFY ALL LOCATIONS BEFORE BUILDING TRUSSES AND SETTING TRUSSES.

"ATTENTION"

1. LIMITED RESPONSIBILITY OF ROOF TRUSS MANUFACTURER. SEE ANSI/TPI-2014 CHAPTER 2, FOUND IN DESIGN MANUAL
2. WARNING FAILURE TO FOLLOW RECOMENDATIONS IN "BCSI" MAY RESULT IN SERIOUS INJURY, LOSS OF LIFE, OR PROPERTY DAMAGE. SEE: WWW.SBCINDUSTRY.COM/DOCS/OG_BCSI_BOOKLET_FINAL.PDF
3. STRUCTURAL ENGINEER OF RECORD AND/OR THE ARCHITECT MUST CHECK ALL OF THE TRUSSES TO MAKE SURE HEY MEET THE STANDARD LOADING FOR THE BUILDING AND ANY OTHER SPECIAL LOADING CONDITIONS NEEDED
4. CUSTOMER TO VERIFY ALL DIMENSIONS, BEARING HEIGHTS, PITCHES AND ALL INFORMATION REGARDING THE DESIGN AND FABRICATION OF TRUSS SYSTEM.
5. DO NOT OVERLOAD TRUSSES W/ SHEETROCK/SHEATHING OR OTHER BUILDING MATERIALS.
6. TRUSSES ARE NOT MARKED IN ANY WAY TO IDENTIFY THE FREQUENCY, OR LOCATION OF TEMPORARY ERECTION BRACING. ALL TEMPORARY BRCING SHALL COMPLY WITH THE LATEST EDITION OF BCSI-B1 PUBLISHED BY THE TRUSS PLATE INSTITUTE FOUND IN TEH DESIGN MANUAL
7. NON-LOAD BEARING WALLS TO BE SINGLE TOP PLATED, TO PREVENT LOAD TRANSFER TO THESE WALLS A 1x4 MAY BE USED AS SECOND TOP PLATE
8. DO NOT CUT OR MODIFY ANY TRUSSES WITHOUT FIRST CONTACTING RIDGWAY ROOF TRUSS FOR APPROVAL. ANY MODIFICATION TO THE TRUSSES WILL COMPROMISE THE STRUCTURAL INTEGRITY. ALL TRUSS MODIFICATION REQUESTS MUST BE SUBMITTED IN WRITING TO RIDGWAY ROOF TRUSS PRIOR TO FIELD CHANGES.

ROOF TRUSS LAYOUT

SCALE: 1/8" = 1'-0"

SOUTHTRUST CONSTRUCTION
ROGERS RESIDENCE

Ridgway Roof Truss Company
235 SW 11th Place Gainesville, Florida 32601
Telephone (352) 376-4436 FAX (352) 371-3316
E-Mail: Sales@RidgwayTruss.com

REVISION DATE	REVISION	REV. BY	CHK. BY

Salesman:	SETH SHRUM		
Initial Check:			
Design:	CAD:	JAJ	
Job: # 200562	Date: 10-9-20		
File:	M:\Projects\		

Page 1 of 1

M:\Projects\200562\200562 10-9-20.dwg, PAGE 1, 10/9/2020 4:53:17 PM, Seth, Seth