Lumber design values are in accordance with ANSI/TPI 1 section 6.3
These truss designs rely on lumber values established by others.

RE: 3046319 - DAVID - TBD FOREST COUNTRY

MiTek USA, Inc.
6904 Parke East Blvd.
Tampa, FL 33610-4115

Site Information:
Customer Info: Ron David Project Name: Spec Hse Model: Custom
Lot/Block: N/A Subdivision: Forest Country
Address: TBD SW Long Leaf Drive, N/A
City: Columbia Cty State: FL

Name Address and License # of Structural Engineer of Record, If there is one, for the building.
Name: License #:
Address:
City: State:

General Truss Engineering Criteria & Design Loads (Individual Truss Design Drawings Show Special Loading Conditions):
Design Code: FBC2020/TPI2014 Design Program: MiTek 20/20 8.4
Wind Code: ASCE 7-16 Wind Speed: 130 mph
Roof Load: 37.0 psf Floor Load: N/A psf

This package includes 18 individual, Truss Design Drawings and 0 Additional Drawings.
With my seal affixed to this sheet, I hereby certify that I am the Truss Design Engineer and this index sheet conforms to 61G15-31.003, section 5 of the Florida Board of Professional Engineers Rules.

No.	Seal#	Truss Name	Date
1	T26758972	CJ01	2/8/22
2	T26758973	CJ03	2/8/22
3	T26758974	CJ05	2/8/22
4	T26758975	EJ01	2/8/22
5	T26758976	HJ10	2/8/22
6	T26758977	T01	2/8/22
7	T26758978	T01G	2/8/22
8	T26758979	T02	2/8/22
9	T26758980	T03	2/8/22
10	T26758981	T03G	2/8/22
11	T26758982	T04	2/8/22
12	T26758983	T04A	2/8/22
13	T26758984	T04G	2/8/22
14	T26758985	T05	2/8/22
15	T26758986	T05G	2/8/22
16	T26758987	T06	2/8/22
17	T26758988	T07	2/8/22
18	T26758989	V01	2/8/22

Columbia County Building Department
Plans Reviewed for Code Compliance
State of Florida

COLUMBIA COUNTY BUILDING DEPARTMENT
Received for FILE COPY
Code Compliance
PLANS EXAMINER

The truss drawing(s) referenced above have been prepared by MiTek USA, Inc. under my direct supervision based on the parameters provided by Builders FirstSource-Lake City, FL.

Truss Design Engineer's Name: ORegan, Philip
My license renewal date for the state of Florida is February 28, 2023.

IMPORTANT NOTE: The seal on these truss component designs is a certification that the engineer named is licensed in the jurisdiction(s) identified and that the designs comply with ANSI/TPI 1. These designs are based upon parameters shown (e.g., loads, supports, dimensions, shapes and design codes), which were given to MiTek or TRENCO. Any project specific information included is for MiTek's or TRENCO's customers file reference purpose only, and was not taken into account in the preparation of these designs. MiTek or TRENCO has not independently verified the applicability of the design parameters or the designs for any particular building. Before use, the building designer should verify applicability of design parameters and properly incorporate these designs into the overall building design per ANSI/TPI 1, Chapter 2.

PHILIP J. O'REGAN
LICENSE
No. 58126
STATE OF FLORIDA
PROFESSIONAL ENGINEER

Philip J. O'Regan PE No.58126
MiTek USA, Inc. FL Cert 6634
6904 Parke East Blvd. Tampa FL 33610
Date:
February 8,2022

Job	Truss	Truss Type	Qty	Ply	DAVID - TBD FOREST COUNTRY
3046319	CJ01	Jack-Open	2	1	T26758972 Job Reference (optional)

Builders FirstSource (Lake City,FL), Lake City, FL - 32055, 8.430 s Aug 16 2021 MiTek Industries, Inc. Mon Feb 7 06:03:59 2022 Page 1
ID:9Rsp_tPSI6LyCRUchohsVazGIxZ-_LxUcUQQmsL37GxK6NgmDFi1NjgFphjRWtALunzncvE

Scale = 1:8.2

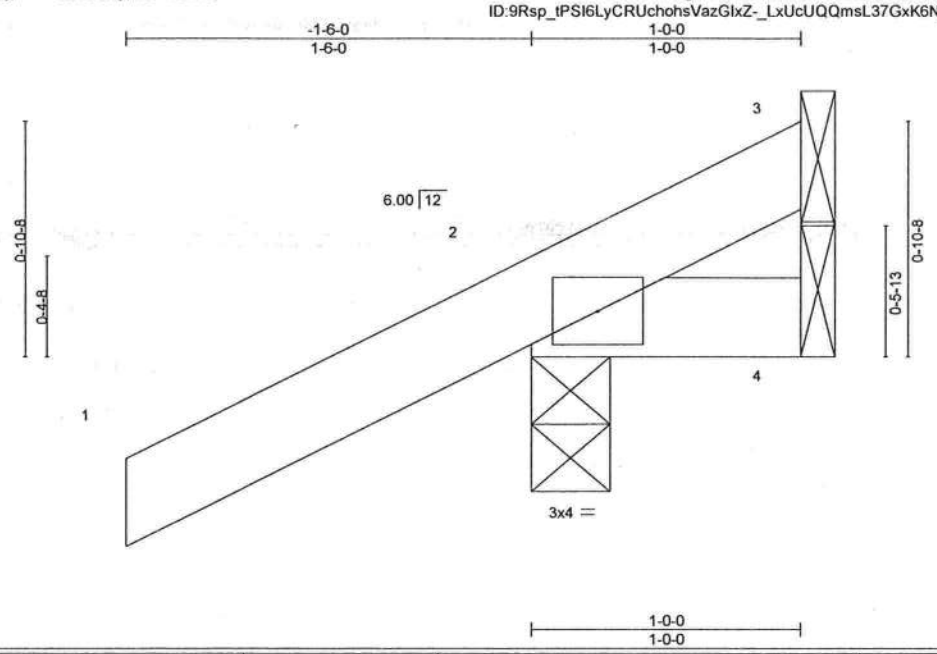

LOADING (psf)		SPACING- 2-0-0		CSI.		DEFL.	in	(loc)	l/defl	L/d	PLATES	GRIP
TCLL	20.0	Plate Grip DOL	1.25	TC	0.13	Vert(LL)	0.00	7	>999	240	MT20	244/190
TCDL	7.0	Lumber DOL	1.25	BC	0.03	Vert(CT)	0.00	7	>999	180		
BCLL	0.0 *	Rep Stress Incr	YES	WB	0.00	Horz(CT)	0.00	2	n/a	n/a		
BCDL	10.0	Code FBC2020/TPI2014		Matrix-MP							Weight: 6 lb	FT = 20%

LUMBER-
TOP CHORD 2x4 SP No.2
BOT CHORD 2x4 SP No.2

BRACING-
TOP CHORD Structural wood sheathing directly applied or 1-0-0 oc purlins.
BOT CHORD Rigid ceiling directly applied or 10-0-0 oc bracing.

REACTIONS. (size) 3=Mechanical, 2=0-3-8, 4=Mechanical
Max Horz 2=38(LC 12)
Max Uplift 3=-6(LC 1), 2=-64(LC 12), 4=-19(LC 1)
Max Grav 3=8(LC 8), 2=179(LC 1), 4=18(LC 16)

FORCES. (lb) - Max. Comp./Max. Ten. - All forces 250 (lb) or less except when shown.

NOTES-
1) Wind: ASCE 7-16; Vult=130mph (3-second gust) Vasd=101mph; TCDL=4.2psf; BCDL=3.0psf; h=18ft; Cat. II; Exp B; Encl., GCpi=0.18; MWFRS (envelope) gable end zone and C-C Exterior(2E) zone;C-C for members and forces & MWFRS for reactions shown; Lumber DOL=1.60 plate grip DOL=1.60
2) Building Designer / Project engineer responsible for verifying applied roof live load shown covers rain loading requirements specific to the use of this truss component.
3) This truss has been designed for a 10.0 psf bottom chord live load nonconcurrent with any other live loads.
4) * This truss has been designed for a live load of 20.0psf on the bottom chord in all areas where a rectangle 3-6-0 tall by 2-0-0 wide will fit between the bottom chord and any other members.
5) Refer to girder(s) for truss to truss connections.
6) Provide mechanical connection (by others) of truss to bearing plate capable of withstanding 6 lb uplift at joint 3, 64 lb uplift at joint 2 and 19 lb uplift at joint 4.

Philip J. O'Regan PE No.58126
MiTek USA, Inc. FL Cert 6634
6904 Parke East Blvd. Tampa FL 33610
Date:
February 8,2022

WARNING - Verify design parameters and READ NOTES ON THIS AND INCLUDED MITEK REFERENCE PAGE MII-7473 rev. 5/19/2020 BEFORE USE.
Design valid for use only with MiTek® connectors. This design is based only upon parameters shown, and is for an individual building component, not a truss system. Before use, the building designer must verify the applicability of design parameters and properly incorporate this design into the overall building design. Bracing indicated is to prevent buckling of individual truss web and/or chord members only. Additional temporary and permanent bracing is always required for stability and to prevent collapse with possible personal injury and property damage. For general guidance regarding the fabrication, storage, delivery, erection and bracing of trusses and truss systems, see ***ANSI/TPI1 Quality Criteria, DSB-89 and BCSI Building Component Safety Information*** available from Truss Plate Institute, 2670 Crain Highway, Suite 203 Waldorf, MD 20601

MiTek
6904 Parke East Blvd.
Tampa, FL 36610

Job	Truss	Truss Type	Qty	Ply	DAVID - TBD FOREST COUNTRY	
3046319	CJ03	Jack-Open	2	1	Job Reference (optional)	T26758973

Builders FirstSource (Lake City,FL), Lake City, FL - 32055, 8.430 s Aug 16 2021 MiTek Industries, Inc. Mon Feb 7 06:04:00 2022 Page 1
ID:9Rsp_tPSl6LyCRUchohsVazGIxZ-SXVspqR2XATwkQWWf5B?ITEC77?rY8yalXwvQDzncvD

-1-6-0 / 1-6-0 | 3-0-0 / 3-0-0

Scale = 1:13.3

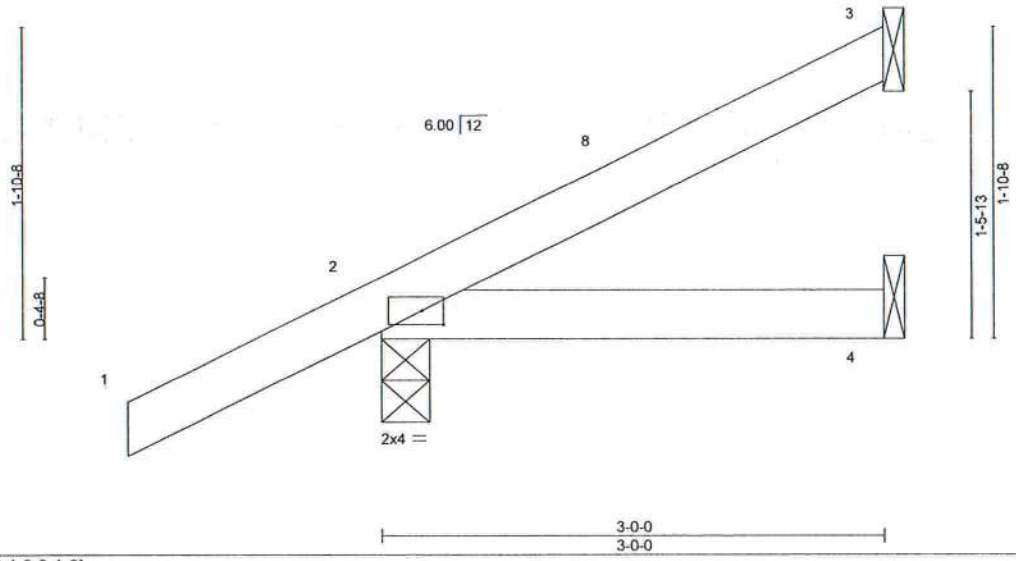

Plate Offsets (X,Y)-- [2:0-1-9,0-1-0]

LOADING (psf)		SPACING-	2-0-0	CSI.		DEFL.	in	(loc)	l/defl	L/d	PLATES	GRIP
TCLL	20.0	Plate Grip DOL	1.25	TC	0.13	Vert(LL)	-0.00	4-7	>999	240	MT20	244/190
TCDL	7.0	Lumber DOL	1.25	BC	0.07	Vert(CT)	-0.01	4-7	>999	180		
BCLL	0.0 *	Rep Stress Incr	YES	WB	0.00	Horz(CT)	0.00	3	n/a	n/a		
BCDL	10.0	Code FBC2020/TPI2014		Matrix-MP							Weight: 12 lb	FT = 20%

LUMBER-
TOP CHORD 2x4 SP No.2
BOT CHORD 2x4 SP No.2

BRACING-
TOP CHORD Structural wood sheathing directly applied or 3-0-0 oc purlins.
BOT CHORD Rigid ceiling directly applied or 10-0-0 oc bracing.

REACTIONS. (size) 3=Mechanical, 2=0-3-8, 4=Mechanical
Max Horz 2=70(LC 12)
Max Uplift 3=-34(LC 12), 2=-55(LC 12)
Max Grav 3=60(LC 1), 2=210(LC 1), 4=50(LC 3)

FORCES. (lb) - Max. Comp./Max. Ten. - All forces 250 (lb) or less except when shown.

NOTES-
1) Wind: ASCE 7-16; Vult=130mph (3-second gust) Vasd=101mph; TCDL=4.2psf; BCDL=3.0psf; h=18ft; Cat. II; Exp B; Encl., GCpi=0.18; MWFRS (envelope) gable end zone and C-C Exterior(2E) -1-6-0 to 1-6-0, Interior(1) 1-6-0 to 2-11-4 zone;C-C for members and forces & MWFRS for reactions shown; Lumber DOL=1.60 plate grip DOL=1.60
2) Building Designer / Project engineer responsible for verifying applied roof live load shown covers rain loading requirements specific to the use of this truss component.
3) This truss has been designed for a 10.0 psf bottom chord live load nonconcurrent with any other live loads.
4) * This truss has been designed for a live load of 20.0psf on the bottom chord in all areas where a rectangle 3-6-0 tall by 2-0-0 wide will fit between the bottom chord and any other members.
5) Refer to girder(s) for truss to truss connections.
6) Provide mechanical connection (by others) of truss to bearing plate capable of withstanding 34 lb uplift at joint 3 and 55 lb uplift at joint 2.

PHILIP J. O'REGAN
LICENSE
No 58126
STATE OF
FLORIDA
PROFESSIONAL ENGINEER

Philip J. O'Regan PE No.58126
MiTek USA, Inc. FL Cert 6634
6904 Parke East Blvd. Tampa FL 33610
Date:
February 8,2022

WARNING - Verify design parameters and READ NOTES ON THIS AND INCLUDED MITEK REFERENCE PAGE MII-7473 rev. 5/19/2020 BEFORE USE.
Design valid for use only with MiTek® connectors. This design is based only upon parameters shown, and is for an individual building component, not a truss system. Before use, the building designer must verify the applicability of design parameters and properly incorporate this design into the overall building design. Bracing indicated is to prevent buckling of individual truss web and/or chord members only. Additional temporary and permanent bracing is always required for stability and to prevent collapse with possible personal injury and property damage. For general guidance regarding the fabrication, storage, delivery, erection and bracing of trusses and truss systems, see ***ANSI/TPI1 Quality Criteria, DSB-89 and BCSI Building Component Safety Information*** available from Truss Plate Institute, 2670 Crain Highway, Suite 203 Waldorf, MD 20601

MiTek
6904 Parke East Blvd.
Tampa, FL 36610

Job	Truss	Truss Type	Qty	Ply	DAVID - TBD FOREST COUNTRY
3046319	CJ05	Jack-Open	2	1	T26758974 Job Reference (optional)

Builders FirstSource (Lake City,FL), Lake City, FL - 32055, 8.430 s Aug 16 2021 MiTek Industries, Inc. Mon Feb 7 06:04:01 2022 Page 1
ID:9Rsp_tPSl6LyCRUchohsVazGlxZ-wk3E1ASgITbnMa5iDoiElgnLZXJSHbCkzBfSyfzncvC

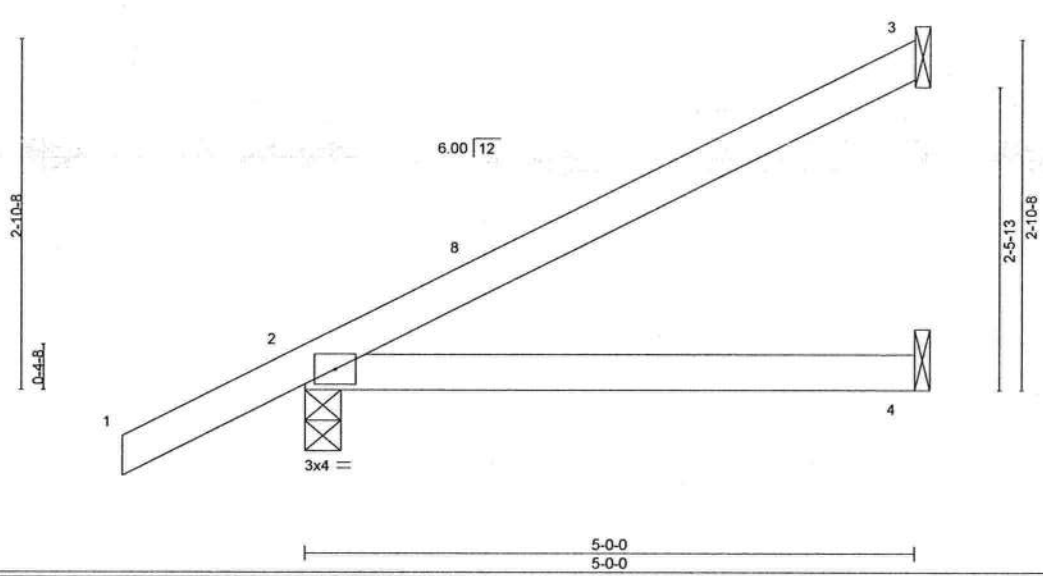

LOADING (psf)		SPACING- 2-0-0		CSI.		DEFL.	in	(loc)	l/defl	L/d	PLATES	GRIP
TCLL	20.0	Plate Grip DOL	1.25	TC	0.28	Vert(LL)	0.03	4-7	>999	240	MT20	244/190
TCDL	7.0	Lumber DOL	1.25	BC	0.24	Vert(CT)	-0.05	4-7	>999	180		
BCLL	0.0 *	Rep Stress Incr	YES	WB	0.00	Horz(CT)	0.00	3	n/a	n/a		
BCDL	10.0	Code FBC2020/TPI2014		Matrix-MP							Weight: 18 lb	FT = 20%

LUMBER-
TOP CHORD 2x4 SP No.2
BOT CHORD 2x4 SP No.2

BRACING-
TOP CHORD Structural wood sheathing directly applied or 5-0-0 oc purlins.
BOT CHORD Rigid ceiling directly applied or 10-0-0 oc bracing.

REACTIONS. (size) 3=Mechanical, 2=0-3-8, 4=Mechanical
Max Horz 2=104(LC 12)
Max Uplift 3=-64(LC 12), 2=-61(LC 12)
Max Grav 3=113(LC 1), 2=276(LC 1), 4=88(LC 3)

FORCES. (lb) - Max. Comp./Max. Ten. - All forces 250 (lb) or less except when shown.

NOTES-
1) Wind: ASCE 7-16; Vult=130mph (3-second gust) Vasd=101mph; TCDL=4.2psf; BCDL=3.0psf; h=18ft; Cat. II; Exp B; Encl., GCpi=0.18; MWFRS (envelope) gable end zone and C-C Exterior(2E) -1-6-0 to 1-6-0, Interior(1) 1-6-0 to 4-11-4 zone;C-C for members and forces & MWFRS for reactions shown; Lumber DOL=1.60 plate grip DOL=1.60
2) Building Designer / Project engineer responsible for verifying applied roof live load shown covers rain loading requirements specific to the use of this truss component.
3) This truss has been designed for a 10.0 psf bottom chord live load nonconcurrent with any other live loads.
4) * This truss has been designed for a live load of 20.0psf on the bottom chord in all areas where a rectangle 3-6-0 tall by 2-0-0 wide will fit between the bottom chord and any other members.
5) Refer to girder(s) for truss to truss connections.
6) Provide mechanical connection (by others) of truss to bearing plate capable of withstanding 64 lb uplift at joint 3 and 61 lb uplift at joint 2.

Philip J. O'Regan PE No.58126
MiTek USA, Inc. FL Cert 6634
6904 Parke East Blvd. Tampa FL 33610
Date:
February 8,2022

WARNING - Verify design parameters and READ NOTES ON THIS AND INCLUDED MITEK REFERENCE PAGE MII-7473 rev. 5/19/2020 BEFORE USE.
Design valid for use only with MiTek® connectors. This design is based only upon parameters shown, and is for an individual building component, not a truss system. Before use, the building designer must verify the applicability of design parameters and properly incorporate this design into the overall building design. Bracing indicated is to prevent buckling of individual truss web and/or chord members only. Additional temporary and permanent bracing is always required for stability and to prevent collapse with possible personal injury and property damage. For general guidance regarding the fabrication, storage, delivery, erection and bracing of trusses and truss systems, see ***ANSI/TPI1 Quality Criteria, DSB-89 and BCSI Building Component Safety Information*** available from Truss Plate Institute, 2670 Crain Highway, Suite 203 Waldorf, MD 20601

MiTek
6904 Parke East Blvd.
Tampa, FL 36610

Job	Truss	Truss Type	Qty	Ply	DAVID - TBD FOREST COUNTRY
3046319	EJ01	Jack-Partial	13	1	T26758975 Job Reference (optional)

Builders FirstSource (Lake City,FL), Lake City, FL - 32055, 8.430 s Aug 16 2021 MiTek Industries, Inc. Mon Feb 7 06:04:01 2022 Page 1
ID:9Rsp_tPSI6LyCRUchohsVazGIxZ-wk3E1ASgITbnMa5iDoiEIgnG7XE7HbCkzBfSyfzncvC

Scale = 1:23.2

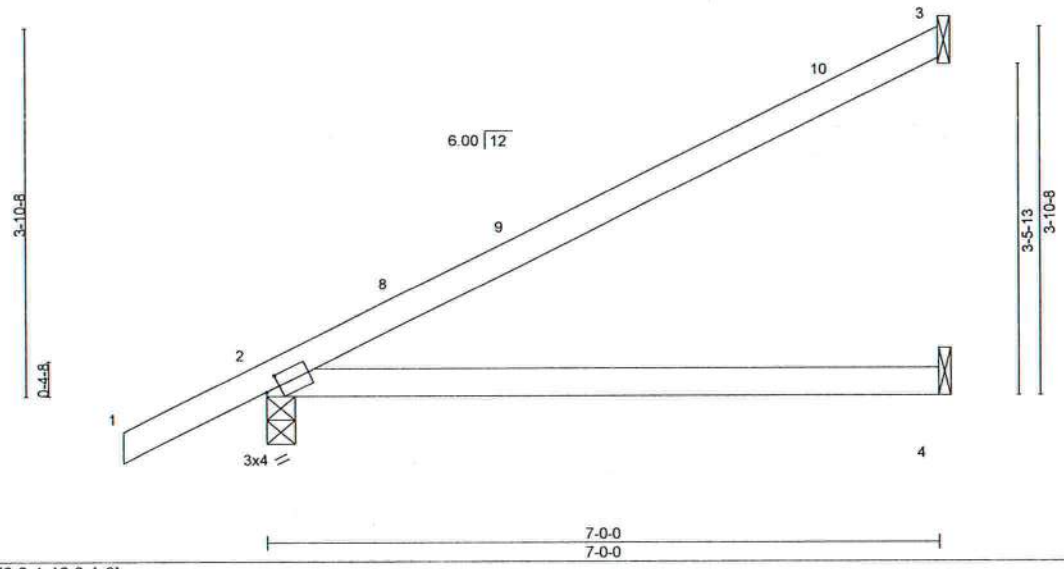

Plate Offsets (X,Y)-- [2:0-1-13,0-1-8]

LOADING (psf)		SPACING-	2-0-0	CSI.		DEFL.	in	(loc)	l/defl	L/d	PLATES	GRIP
TCLL	20.0	Plate Grip DOL	1.25	TC	0.63	Vert(LL)	0.10	4-7	>818	240	MT20	244/190
TCDL	7.0	Lumber DOL	1.25	BC	0.51	Vert(CT)	-0.22	4-7	>385	180		
BCLL	0.0 *	Rep Stress Incr	YES	WB	0.00	Horz(CT)	0.01	2	n/a	n/a		
BCDL	10.0	Code FBC2020/TPI2014		Matrix-MS							Weight: 25 lb	FT = 20%

LUMBER-
TOP CHORD 2x4 SP No.2
BOT CHORD 2x4 SP No.2

BRACING-
TOP CHORD Structural wood sheathing directly applied or 6-0-0 oc purlins.
BOT CHORD Rigid ceiling directly applied or 10-0-0 oc bracing.

REACTIONS. (size) 3=Mechanical, 2=0-3-8, 4=Mechanical
Max Horz 2=133(LC 12)
Max Uplift 3=-82(LC 12), 2=-72(LC 12)
Max Grav 3=164(LC 1), 2=346(LC 1), 4=126(LC 3)

FORCES. (lb) - Max. Comp./Max. Ten. - All forces 250 (lb) or less except when shown.

NOTES-
1) Wind: ASCE 7-16; Vult=130mph (3-second gust) Vasd=101mph; TCDL=4.2psf; BCDL=3.0psf; h=18ft; Cat. II; Exp B; Encl., GCpi=0.18; MWFRS (envelope) gable end zone and C-C Exterior(2E) -1-6-0 to 1-6-0, Interior(1) 1-6-0 to 6-11-4 zone;C-C for members and forces & MWFRS for reactions shown; Lumber DOL=1.60 plate grip DOL=1.60
2) Building Designer / Project engineer responsible for verifying applied roof live load shown covers rain loading requirements specific to the use of this truss component.
3) This truss has been designed for a 10.0 psf bottom chord live load nonconcurrent with any other live loads.
4) * This truss has been designed for a live load of 20.0psf on the bottom chord in all areas where a rectangle 3-6-0 tall by 2-0-0 wide will fit between the bottom chord and any other members.
5) Refer to girder(s) for truss to truss connections.
6) Provide mechanical connection (by others) of truss to bearing plate capable of withstanding 82 lb uplift at joint 3 and 72 lb uplift at joint 2.

Philip J. O'Regan PE No.58126
MiTek USA, Inc. FL Cert 6634
6904 Parke East Blvd. Tampa FL 33610
Date:
February 8,2022

WARNING - Verify design parameters and READ NOTES ON THIS AND INCLUDED MITEK REFERENCE PAGE MII-7473 rev. 5/19/2020 BEFORE USE.
Design valid for use only with MiTek® connectors. This design is based only upon parameters shown, and is for an individual building component, not a truss system. Before use, the building designer must verify the applicability of design parameters and properly incorporate this design into the overall building design. Bracing indicated is to prevent buckling of individual truss web and/or chord members only. Additional temporary and permanent bracing is always required for stability and to prevent collapse with possible personal injury and property damage. For general guidance regarding the fabrication, storage, delivery, erection and bracing of trusses and truss systems, see ***ANSI/TPI1 Quality Criteria, DSB-89 and BCSI Building Component Safety Information*** available from Truss Plate Institute, 2670 Crain Highway, Suite 203 Waldorf, MD 20601

MiTek
6904 Parke East Blvd.
Tampa, FL 36610

Job	Truss	Truss Type	Qty	Ply	DAVID - TBD FOREST COUNTRY
3046319	HJ10	Diagonal Hip Girder	1	1	T26758976 Job Reference (optional)

Builders FirstSource (Lake City,FL), Lake City, FL - 32055, 8.430 s Aug 16 2021 MiTek Industries, Inc. Mon Feb 7 06:04:03 2022 Page 1
ID:9Rsp_lPSI6LyCRUchohsVazGIxZ-t6B?SsTwq5rVbuF5LDkiN5scKKu_lPr1RV8Z1YzncvA

-2-1-7 | 4-6-0 | 9-10-1
2-1-7 | 4-6-0 | 5-4-1

Scale = 1:22.8

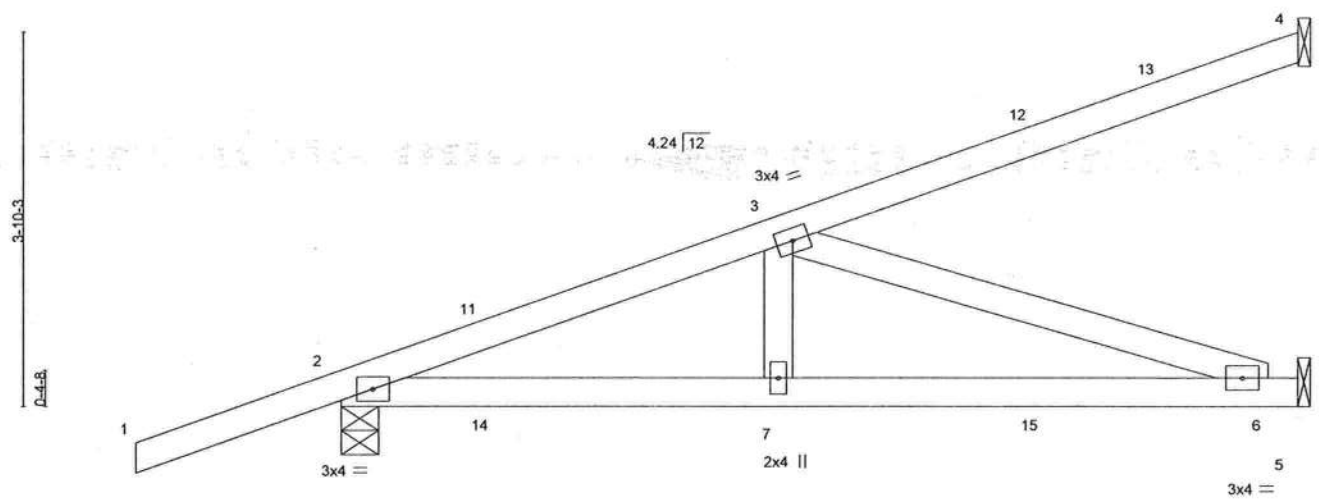

4-6-0 | 9-9-5 | 9-10-1
4-6-0 | 5-3-5 | 0-0-12

LOADING (psf)		SPACING- 2-0-0		CSI.		DEFL.	in	(loc)	l/defl	L/d	PLATES	GRIP
TCLL	20.0	Plate Grip DOL	1.25	TC	0.58	Vert(LL)	-0.05	6-7	>999	240	MT20	244/190
TCDL	7.0	Lumber DOL	1.25	BC	0.62	Vert(CT)	-0.12	6-7	>992	180		
BCLL	0.0 *	Rep Stress Incr	NO	WB	0.44	Horz(CT)	0.01	5	n/a	n/a		
BCDL	10.0	Code FBC2020/TPI2014		Matrix-MS							Weight: 43 lb	FT = 20%

LUMBER-
TOP CHORD 2x4 SP No.2
BOT CHORD 2x4 SP No.2
WEBS 2x4 SP No.3

BRACING-
TOP CHORD Structural wood sheathing directly applied or 6-0-0 oc purlins.
BOT CHORD Rigid ceiling directly applied or 10-0-0 oc bracing.

REACTIONS. (size) 4=Mechanical, 2=0-4-9, 5=Mechanical
Max Horz 2=144(LC 22)
Max Uplift 4=-76(LC 4), 2=-135(LC 4), 5=-47(LC 8)
Max Grav 4=149(LC 1), 2=527(LC 1), 5=299(LC 1)

FORCES. (lb) - Max. Comp./Max. Ten. - All forces 250 (lb) or less except when shown.
TOP CHORD 2-3=-799/159
BOT CHORD 2-7=-198/729, 6-7=-198/729
WEBS 3-7=0/281, 3-6=-767/209

NOTES-
1) Wind: ASCE 7-16; Vult=130mph (3-second gust) Vasd=101mph; TCDL=4.2psf; BCDL=3.0psf; h=18ft; Cat. II; Exp B; Encl., GCpi=0.18; MWFRS (envelope) gable end zone; Lumber DOL=1.60 plate grip DOL=1.60
2) Building Designer / Project engineer responsible for verifying applied roof live load shown covers rain loading requirements specific to the use of this truss component.
3) This truss has been designed for a 10.0 psf bottom chord live load nonconcurrent with any other live loads.
4) * This truss has been designed for a live load of 20.0psf on the bottom chord in all areas where a rectangle 3-6-0 tall by 2-0-0 wide will fit between the bottom chord and any other members.
5) Refer to girder(s) for truss to truss connections.
6) Provide mechanical connection (by others) of truss to bearing plate capable of withstanding 76 lb uplift at joint 4, 135 lb uplift at joint 2 and 47 lb uplift at joint 5.
7) Hanger(s) or other connection device(s) shall be provided sufficient to support concentrated load(s) 60 lb down and 63 lb up at 1-6-1, 60 lb down and 63 lb up at 1-6-1, 21 lb down and 37 lb up at 4-4-0, 21 lb down and 37 lb up at 4-4-0, and 42 lb down and 75 lb up at 7-1-15, and 42 lb down and 75 lb up at 7-1-15 on top chord, and 17 lb down and 39 lb up at 1-6-1, 17 lb down and 39 lb up at 1-6-1, 22 lb down at 4-4-0, 22 lb down at 4-4-0, and 41 lb down at 7-1-15, and 41 lb down at 7-1-15 on bottom chord. The design/selection of such connection device(s) is the responsibility of others.
8) In the LOAD CASE(S) section, loads applied to the face of the truss are noted as front (F) or back (B).

LOAD CASE(S) Standard
1) Dead + Roof Live (balanced): Lumber Increase=1.25, Plate Increase=1.25
Uniform Loads (plf)
Vert: 1-4=-54, 5-8=-20
Concentrated Loads (lb)
Vert: 7=-6(F=-3, B=-3) 12=-73(F=-36, B=-36) 15=-59(F=-29, B=-29)

Philip J. O'Regan PE No.58126
MiTek USA, Inc. FL Cert 6634
6904 Parke East Blvd. Tampa FL 33610
Date:
February 8,2022

WARNING - Verify design parameters and READ NOTES ON THIS AND INCLUDED MITEK REFERENCE PAGE MII-7473 rev. 5/19/2020 BEFORE USE.
Design valid for use only with MiTek® connectors. This design is based only upon parameters shown, and is for an individual building component, not a truss system. Before use, the building designer must verify the applicability of design parameters and properly incorporate this design into the overall building design. Bracing indicated is to prevent buckling of individual truss web and/or chord members only. Additional temporary and permanent bracing is always required for stability and to prevent collapse with possible personal injury and property damage. For general guidance regarding the fabrication, storage, delivery, erection and bracing of trusses and truss systems, see ***ANSI/TPI1 Quality Criteria, DSB-89 and BCSI Building Component Safety Information*** available from Truss Plate Institute, 2670 Crain Highway, Suite 203 Waldorf, MD 20601

MiTek
6904 Parke East Blvd.
Tampa, FL 36610

Job	Truss	Truss Type	Qty	Ply	DAVID - TBD FOREST COUNTRY
3046319	T01	COMMON	6	1	T26758977 Job Reference (optional)

Builders FirstSource (Lake City,FL), Lake City, FL - 32055, 8.430 s Aug 16 2021 MiTek Industries, Inc. Mon Feb 7 06:04:03 2022 Page 1
ID:9Rsp_tPSI6LyCRUchohsVazGIxZ-t6B?SsTwq5rVbuF5LDkiN5sfuKp_IRH1RV8Z1YzncvA

-1-6-0	5-4-7	11-0-0	16-7-8	22-0-0	23-6-0
1-6-0	5-4-7	5-7-8	5-7-9	5-4-8	1-6-0

Scale = 1:41.3

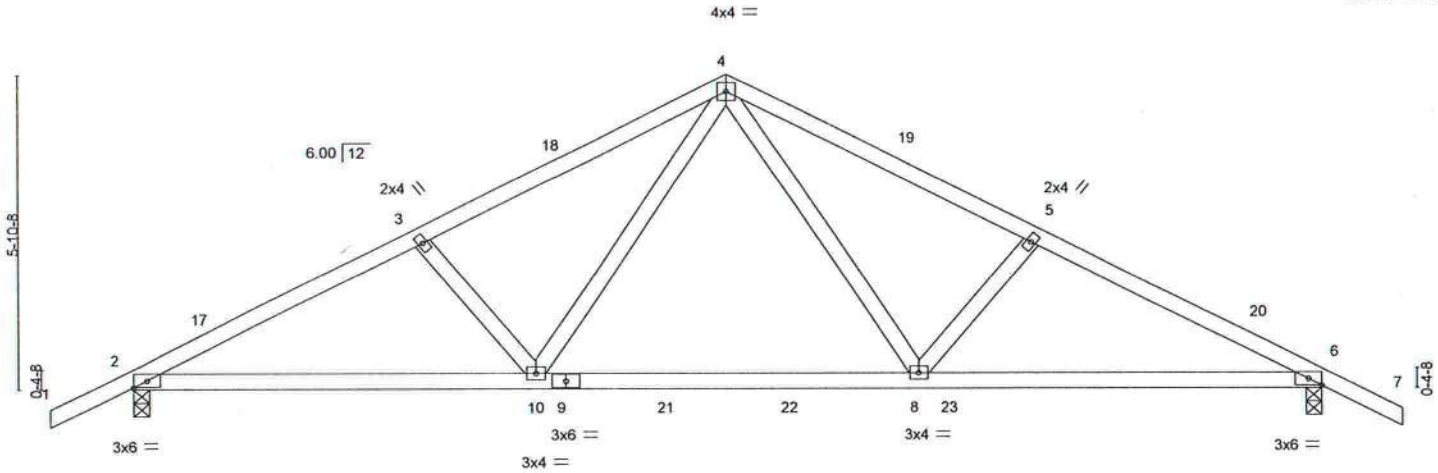

7-5-9	14-6-7	22-0-0
7-5-9	7-0-15	7-5-9

Plate Offsets (X,Y)-- [6:0-2-15,Edge]

LOADING (psf)		SPACING-	2-0-0	CSI.		DEFL.	in	(loc)	l/defl	L/d	PLATES	GRIP
TCLL	20.0	Plate Grip DOL	1.25	TC	0.42	Vert(LL)	-0.18	8-10	>999	240	MT20	244/190
TCDL	7.0	Lumber DOL	1.25	BC	0.94	Vert(CT)	-0.33	8-10	>801	180		
BCLL	0.0 *	Rep Stress Incr	NO	WB	0.28	Horz(CT)	0.05	6	n/a	n/a		
BCDL	10.0	Code FBC2020/TPI2014		Matrix-MS							Weight: 103 lb	FT = 20%

LUMBER-
TOP CHORD 2x4 SP No.2
BOT CHORD 2x4 SP No.2
WEBS 2x4 SP No.3

BRACING-
TOP CHORD Structural wood sheathing directly applied or 4-2-3 oc purlins.
BOT CHORD Rigid ceiling directly applied or 10-0-0 oc bracing.

REACTIONS. (size) 2=0-3-8, 6=0-3-8
Max Horz 2=90(LC 16)
Max Uplift 2=-229(LC 12), 6=-231(LC 13)
Max Grav 2=1081(LC 2), 6=1088(LC 2)

FORCES. (lb) - Max. Comp./Max. Ten. - All forces 250 (lb) or less except when shown.
TOP CHORD 2-3=-1818/453, 3-4=-1683/440, 4-5=-1697/445, 5-6=-1833/458
BOT CHORD 2-10=-345/1615, 8-10=-155/1078, 6-8=-340/1614
WEBS 4-8=-168/748, 5-8=-291/175, 4-10=-160/723, 3-10=-291/175

NOTES-
1) Unbalanced roof live loads have been considered for this design.
2) Wind: ASCE 7-16; Vult=130mph (3-second gust) Vasd=101mph; TCDL=4.2psf; BCDL=3.0psf; h=18ft; Cat. II; Exp B; Encl., GCpi=0.18; MWFRS (envelope) gable end zone and C-C Exterior(2E) -1-6-0 to 1-6-0, Interior(1) 1-6-0 to 11-0-0, Exterior(2R) 11-0-0 to 14-0-0, Interior(1) 14-0-0 to 23-6-0 zone;C-C for members and forces & MWFRS for reactions shown; Lumber DOL=1.60 plate grip DOL=1.60
3) Building Designer / Project engineer responsible for verifying applied roof live load shown covers rain loading requirements specific to the use of this truss component.
4) This truss has been designed for a 10.0 psf bottom chord live load nonconcurrent with any other live loads.
5) * This truss has been designed for a live load of 20.0psf on the bottom chord in all areas where a rectangle 3-6-0 tall by 2-0-0 wide will fit between the bottom chord and any other members, with BCDL = 10.0psf.
6) Provide mechanical connection (by others) of truss to bearing plate capable of withstanding 229 lb uplift at joint 2 and 231 lb uplift at joint 6.
7) In the LOAD CASE(S) section, loads applied to the face of the truss are noted as front (F) or back (B).

LOAD CASE(S) Standard
1) Dead + Roof Live (balanced): Lumber Increase=1.25, Plate Increase=1.25
Uniform Loads (plf)
Vert: 1-4=-54, 4-7=-54, 10-11=-20, 10-23=-60(F=-40), 14-23=-20

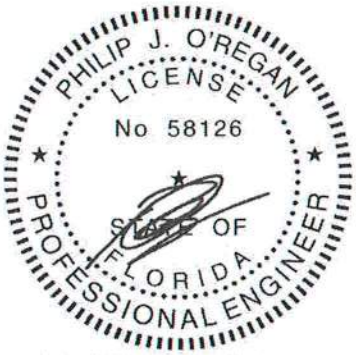

Philip J. O'Regan PE No.58126
MiTek USA, Inc. FL Cert 6634
6904 Parke East Blvd. Tampa FL 33610
Date:
February 8,2022

WARNING - Verify design parameters and READ NOTES ON THIS AND INCLUDED MITEK REFERENCE PAGE MII-7473 rev. 5/19/2020 BEFORE USE.
Design valid for use only with MiTek® connectors. This design is based only upon parameters shown, and is for an individual building component, not a truss system. Before use, the building designer must verify the applicability of design parameters and properly incorporate this design into the overall building design. Bracing indicated is to prevent buckling of individual truss web and/or chord members only. Additional temporary and permanent bracing is always required for stability and to prevent collapse with possible personal injury and property damage. For general guidance regarding the fabrication, storage, delivery, erection and bracing of trusses and truss systems, see ***ANSI/TPI1 Quality Criteria, DSB-89 and BCSI Building Component Safety Information*** available from Truss Plate Institute, 2670 Crain Highway, Suite 203 Waldorf, MD 20601

MiTek
6904 Parke East Blvd.
Tampa, FL 36610

Job	Truss	Truss Type	Qty	Ply	DAVID - TBD FOREST COUNTRY
3046319	T01G	GABLE	1	1	T26758978 Job Reference (optional)

Builders FirstSource (Lake City,FL), Lake City, FL - 32055, 8.430 s Aug 16 2021 MiTek Industries, Inc. Mon Feb 7 06:04:05 2022 Page 1
ID:9Rsp_tPSI6LyCRUchohsVazGIxZ-pVJlsXVBLi5DrBPUSenASWy4w8jADPMKupdf5Qzncv8

-1-6-0 | 11-0-0 | 22-0-0 | 23-6-0
1-6-0 | 11-0-0 | 11-0-0 | 1-6-0

Scale = 1:41.4

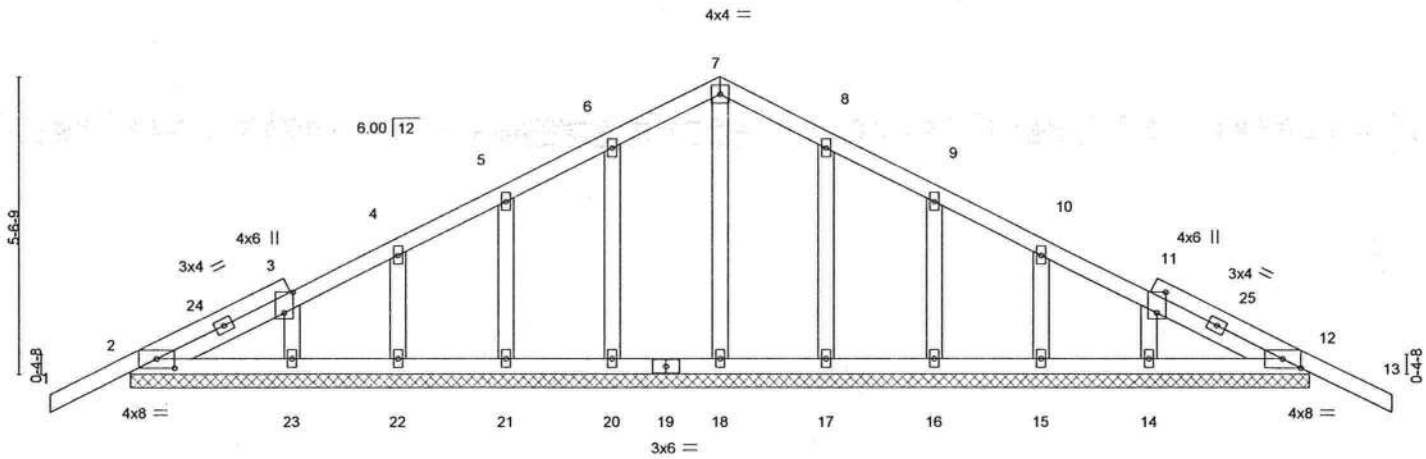

22-0-0
22-0-0

Plate Offsets (X,Y)-- [2:0-4-0,0-2-1], [3:0-4-10,0-2-0], [11:0-4-10,0-2-0], [12:0-4-0,0-2-1]

LOADING (psf)		SPACING-	2-0-0	CSI.		DEFL.	in	(loc)	l/defl	L/d	PLATES	GRIP
TCLL	20.0	Plate Grip DOL	1.25	TC	0.13	Vert(LL)	-0.01	13	n/r	120	MT20	244/190
TCDL	7.0	Lumber DOL	1.25	BC	0.06	Vert(CT)	-0.01	13	n/r	120		
BCLL	0.0 *	Rep Stress Incr	YES	WB	0.05	Horz(CT)	0.00	12	n/a	n/a		
BCDL	10.0	Code FBC2020/TPI2014		Matrix-S							Weight: 120 lb	FT = 20%

LUMBER-
TOP CHORD 2x4 SP No.2
BOT CHORD 2x4 SP No.2
OTHERS 2x4 SP No.3

BRACING-
TOP CHORD Structural wood sheathing directly applied or 6-0-0 oc purlins.
BOT CHORD Rigid ceiling directly applied or 10-0-0 oc bracing.

REACTIONS. All bearings 22-0-0.
(lb) - Max Horz 2=85(LC 16)
Max Uplift All uplift 100 lb or less at joint(s) 2, 12, 20, 21, 22, 23, 17, 16, 15, 14
Max Grav All reactions 250 lb or less at joint(s) 2, 12, 18, 20, 21, 22, 23, 17, 16, 15, 14

FORCES. (lb) - Max. Comp./Max. Ten. - All forces 250 (lb) or less except when shown.

NOTES-
1) Unbalanced roof live loads have been considered for this design.
2) Wind: ASCE 7-16; Vult=130mph (3-second gust) Vasd=101mph; TCDL=4.2psf; BCDL=3.0psf; h=18ft; Cat. II; Exp B; Encl., GCpi=0.18; MWFRS (envelope) gable end zone and C-C Corner(3E) -1-6-0 to 1-6-0, Exterior(2N) 1-6-0 to 11-0-0, Corner(3R) 11-0-0 to 14-0-0, Exterior(2N) 14-0-0 to 23-6-0 zone;C-C for members and forces & MWFRS for reactions shown; Lumber DOL=1.60 plate grip DOL=1.60
3) Truss designed for wind loads in the plane of the truss only. For studs exposed to wind (normal to the face), see Standard Industry Gable End Details as applicable, or consult qualified building designer as per ANSI/TPI 1.
4) Building Designer / Project engineer responsible for verifying applied roof live load shown covers rain loading requirements specific to the use of this truss component.
5) All plates are 2x4 MT20 unless otherwise indicated.
6) Gable requires continuous bottom chord bearing.
7) Gable studs spaced at 2-0-0 oc.
8) This truss has been designed for a 10.0 psf bottom chord live load nonconcurrent with any other live loads.
9) * This truss has been designed for a live load of 20.0psf on the bottom chord in all areas where a rectangle 3-6-0 tall by 2-0-0 wide will fit between the bottom chord and any other members.
10) Provide mechanical connection (by others) of truss to bearing plate capable of withstanding 100 lb uplift at joint(s) 2, 12, 20, 21, 22, 23, 17, 16, 15, 14.

Philip J. O'Regan PE No.58126
MiTek USA, Inc. FL Cert 6634
6904 Parke East Blvd. Tampa FL 33610
Date:
February 8,2022

WARNING - Verify design parameters and READ NOTES ON THIS AND INCLUDED MITEK REFERENCE PAGE MII-7473 rev. 5/19/2020 BEFORE USE.
Design valid for use only with MiTek® connectors. This design is based only upon parameters shown, and is for an individual building component, not a truss system. Before use, the building designer must verify the applicability of design parameters and properly incorporate this design into the overall building design. Bracing indicated is to prevent buckling of individual truss web and/or chord members only. Additional temporary and permanent bracing is always required for stability and to prevent collapse with possible personal injury and property damage. For general guidance regarding the fabrication, storage, delivery, erection and bracing of trusses and truss systems, see ***ANSI/TPI1 Quality Criteria, DSB-89 and BCSI Building Component Safety Information*** available from Truss Plate Institute, 2670 Crain Highway, Suite 203 Waldorf, MD 20601

MiTek
6904 Parke East Blvd.
Tampa, FL 36610

Job	Truss	Truss Type	Qty	Ply	DAVID - TBD FOREST COUNTRY
3046319	T02	COMMON	3	1	T26758979 Job Reference (optional)

Builders FirstSource (Lake City,FL), Lake City, FL - 32055, 8.430 s Aug 16 2021 MiTek Industries, Inc. Mon Feb 7 06:04:06 2022 Page 1
ID:9Rsp_tPSI6LyCRUchohsVazGIxZ-Hhs74tWp60D4TL_g0MIP?kUAFYrdyo4T7TNDetzncv7

-1-6-0	5-4-10	11-0-0	16-7-6	22-0-0
1-6-0	5-4-10	5-7-6	5-7-6	5-4-10

Scale = 1:40.3

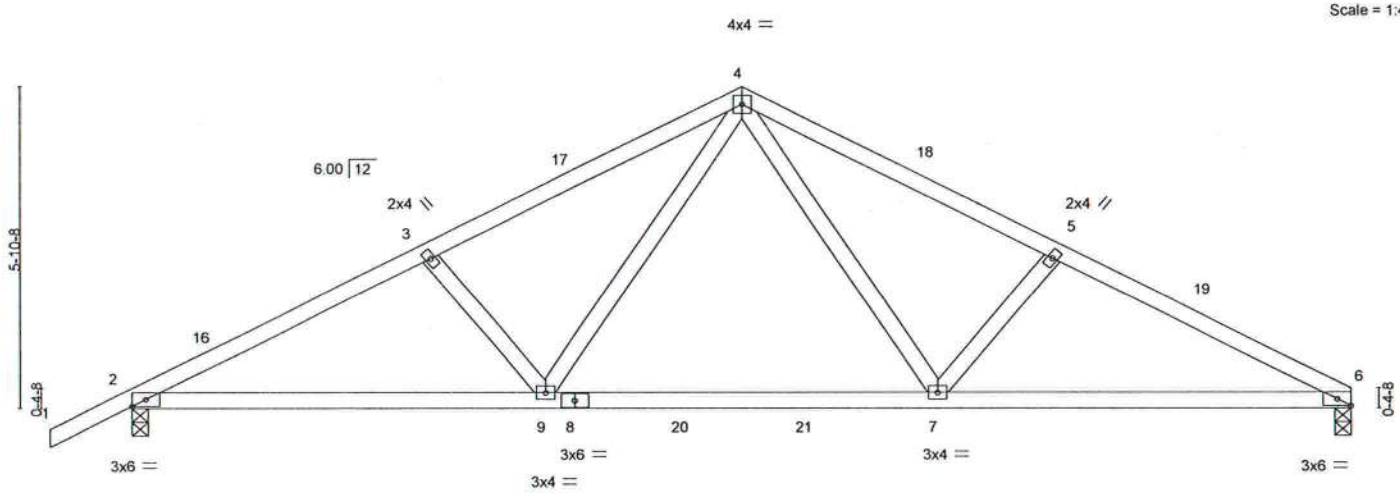

7-5-10	14-6-6	22-0-0
7-5-10	7-0-12	7-5-10

Plate Offsets (X,Y)-- [6:0-2-15,Edge]

LOADING (psf)		SPACING-	2-0-0	CSI.		DEFL.	in	(loc)	l/defl	L/d	PLATES	GRIP
TCLL	20.0	Plate Grip DOL	1.25	TC	0.41	Vert(LL)	-0.18	7-9	>999	240	MT20	244/190
TCDL	7.0	Lumber DOL	1.25	BC	0.94	Vert(CT)	-0.32	7-9	>814	180		
BCLL	0.0 *	Rep Stress Incr	NO	WB	0.28	Horz(CT)	0.05	6	n/a	n/a		
BCDL	10.0	Code FBC2020/TPI2014		Matrix-MS							Weight: 101 lb	FT = 20%

LUMBER-
TOP CHORD 2x4 SP No.2
BOT CHORD 2x4 SP No.2
WEBS 2x4 SP No.3

BRACING-
TOP CHORD Structural wood sheathing directly applied or 4-2-2 oc purlins.
BOT CHORD Rigid ceiling directly applied or 9-9-0 oc bracing.

REACTIONS. (size) 6=0-3-8, 2=0-3-8
Max Horz 2=101(LC 16)
Max Uplift 6=-195(LC 13), 2=-227(LC 12)
Max Grav 6=1006(LC 2), 2=1076(LC 2)

FORCES. (lb) - Max. Comp./Max. Ten. - All forces 250 (lb) or less except when shown.
TOP CHORD 2-3=-1808/455, 3-4=-1672/442, 4-5=-1681/452, 5-6=-1817/464
BOT CHORD 2-9=-362/1595, 7-9=-182/1061, 6-7=-362/1603
WEBS 4-7=-168/734, 5-7=-300/180, 4-9=-160/722, 3-9=-291/175

NOTES-
1) Unbalanced roof live loads have been considered for this design.
2) Wind: ASCE 7-16; Vult=130mph (3-second gust) Vasd=101mph; TCDL=4.2psf; BCDL=3.0psf; h=18ft; Cat. II; Exp B; Encl., GCpi=0.18; MWFRS (envelope) gable end zone and C-C Exterior(2E) -1-6-0 to 1-6-0, Interior(1) 1-6-0 to 11-0-0, Exterior(2R) 11-0-0 to 14-0-0, Interior(1) 14-0-0 to 22-0-0 zone;C-C for members and forces & MWFRS for reactions shown; Lumber DOL=1.60 plate grip DOL=1.60
3) Building Designer / Project engineer responsible for verifying applied roof live load shown covers rain loading requirements specific to the use of this truss component.
4) This truss has been designed for a 10.0 psf bottom chord live load nonconcurrent with any other live loads.
5) * This truss has been designed for a live load of 20.0psf on the bottom chord in all areas where a rectangle 3-6-0 tall by 2-0-0 wide will fit between the bottom chord and any other members, with BCDL = 10.0psf.
6) Provide mechanical connection (by others) of truss to bearing plate capable of withstanding 100 lb uplift at joint(s) except (jt=lb) 6=195, 2=227.
7) In the LOAD CASE(S) section, loads applied to the face of the truss are noted as front (F) or back (B).

LOAD CASE(S) Standard
1) Dead + Roof Live (balanced): Lumber Increase=1.25, Plate Increase=1.25
Uniform Loads (plf)
Vert: 1-4=-54, 4-6=-54, 9-13=-20, 7-9=-60(F=-40), 7-10=-20

Philip J. O'Regan PE No.58126
MiTek USA, Inc. FL Cert 6634
6904 Parke East Blvd. Tampa FL 33610
Date:
February 8,2022

WARNING - Verify design parameters and READ NOTES ON THIS AND INCLUDED MITEK REFERENCE PAGE MII-7473 rev. 5/19/2020 BEFORE USE.
Design valid for use only with MiTek® connectors. This design is based only upon parameters shown, and is for an individual building component, not a truss system. Before use, the building designer must verify the applicability of design parameters and properly incorporate this design into the overall building design. Bracing indicated is to prevent buckling of individual truss web and/or chord members only. Additional temporary and permanent bracing is always required for stability and to prevent collapse with possible personal injury and property damage. For general guidance regarding the fabrication, storage, delivery, erection and bracing of trusses and truss systems, see ***ANSI/TPI1 Quality Criteria, DSB-89 and BCSI Building Component Safety Information*** available from Truss Plate Institute, 2670 Crain Highway, Suite 203 Waldorf, MD 20601

MiTek
6904 Parke East Blvd.
Tampa, FL 36610

Job	Truss	Truss Type	Qty	Ply	DAVID - TBD FOREST COUNTRY
3046319	T03	Common	7	1	T26758980 Job Reference (optional)

Builders FirstSource (Lake City,FL), Lake City, FL - 32055, 8.430 s Aug 16 2021 MiTek Industries, Inc. Mon Feb 7 06:04:07 2022 Page 1
ID:9Rsp_tPSI6LyCRUchohsVazGIxZ-luQVHDXRtJLx4VZsa3peXx1HvyEKhFxcM76mAJzncv6

-1-6-0	7-11-9	15-8-0	23-4-8	31-4-0	32-10-0
1-6-0	7-11-9	7-8-8	7-8-8	7-11-9	1-6-0

Scale = 1:55.0

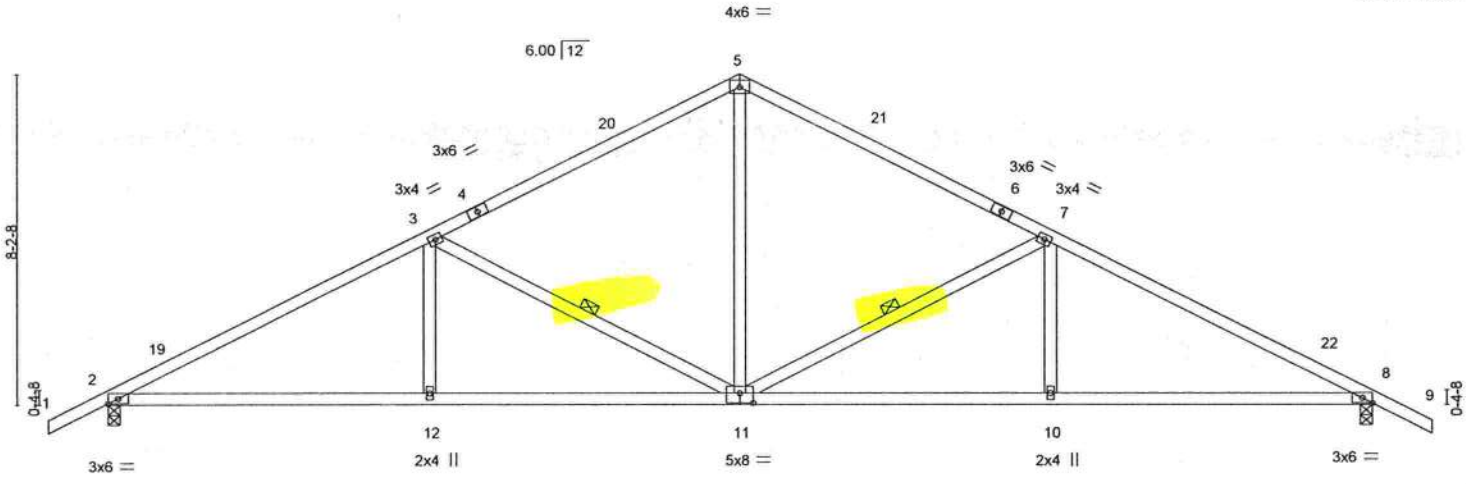

7-11-9	15-8-0	23-4-8	31-4-0
7-11-9	7-8-8	7-8-8	7-11-9

Plate Offsets (X,Y)-- [8:0-2-15,Edge], [11:0-4-0,0-3-0]

LOADING (psf)		SPACING-	2-0-0	CSI.		DEFL.	in	(loc)	l/defl	L/d	PLATES	GRIP
TCLL	20.0	Plate Grip DOL	1.25	TC	0.67	Vert(LL)	-0.11	10-18	>999	240	MT20	244/190
TCDL	7.0	Lumber DOL	1.25	BC	0.72	Vert(CT)	-0.24	10-18	>999	180		
BCLL	0.0 *	Rep Stress Incr	YES	WB	0.30	Horz(CT)	0.08	8	n/a	n/a		
BCDL	10.0	Code FBC2020/TPI2014		Matrix-MS							Weight: 151 lb	FT = 20%

LUMBER-
TOP CHORD 2x4 SP No.2
BOT CHORD 2x4 SP No.2
WEBS 2x4 SP No.3

BRACING-
TOP CHORD Structural wood sheathing directly applied or 3-4-2 oc purlins.
BOT CHORD Rigid ceiling directly applied or 9-5-0 oc bracing.
WEBS 1 Row at midpt 7-11, 3-11

REACTIONS. (size) 2=0-3-8, 8=0-3-8
Max Horz 2=-124(LC 13)
Max Uplift 2=-258(LC 12), 8=-258(LC 13)
Max Grav 2=1240(LC 1), 8=1240(LC 1)

FORCES. (lb) - Max. Comp./Max. Ten. - All forces 250 (lb) or less except when shown.
TOP CHORD 2-3=-2084/390, 3-5=-1412/323, 5-7=-1412/323, 7-8=-2084/390
BOT CHORD 2-12=-374/1795, 11-12=-374/1795, 10-11=-256/1795, 8-10=-256/1795
WEBS 5-11=-121/800, 7-11=-720/278, 7-10=0/328, 3-11=-720/277, 3-12=0/328

NOTES-
1) Unbalanced roof live loads have been considered for this design.
2) Wind: ASCE 7-16; Vult=130mph (3-second gust) Vasd=101mph; TCDL=4.2psf; BCDL=3.0psf; h=18ft; Cat. II; Exp B; Encl., GCpi=0.18; MWFRS (envelope) gable end zone and C-C Exterior(2E) -1-6-0 to 1-6-0, Interior(1) 1-6-0 to 15-8-0, Exterior(2R) 15-8-0 to 18-8-0, Interior(1) 18-8-0 to 32-10-0 zone;C-C for members and forces & MWFRS for reactions shown; Lumber DOL=1.60 plate grip DOL=1.60
3) Building Designer / Project engineer responsible for verifying applied roof live load shown covers rain loading requirements specific to the use of this truss component.
4) This truss has been designed for a 10.0 psf bottom chord live load nonconcurrent with any other live loads.
5) * This truss has been designed for a live load of 20.0psf on the bottom chord in all areas where a rectangle 3-6-0 tall by 2-0-0 wide will fit between the bottom chord and any other members.
6) Provide mechanical connection (by others) of truss to bearing plate capable of withstanding 100 lb uplift at joint(s) except (jt=lb) 2=258, 8=258.

Philip J. O'Regan PE No.58126
MiTek USA, Inc. FL Cert 6634
6904 Parke East Blvd. Tampa FL 33610
Date:
February 8,2022

WARNING - Verify design parameters and READ NOTES ON THIS AND INCLUDED MITEK REFERENCE PAGE MII-7473 rev. 5/19/2020 BEFORE USE.
Design valid for use only with MiTek® connectors. This design is based only upon parameters shown, and is for an individual building component, not a truss system. Before use, the building designer must verify the applicability of design parameters and properly incorporate this design into the overall building design. Bracing indicated is to prevent buckling of individual truss web and/or chord members only. Additional temporary and permanent bracing is always required for stability and to prevent collapse with possible personal injury and property damage. For general guidance regarding the fabrication, storage, delivery, erection and bracing of trusses and truss systems, see ***ANSI/TPI1 Quality Criteria, DSB-89 and BCSI Building Component Safety Information*** available from Truss Plate Institute, 2670 Crain Highway, Suite 203 Waldorf, MD 20601

MiTek
6904 Parke East Blvd.
Tampa, FL 36610

Job	Truss	Truss Type	Qty	Ply	DAVID - TBD FOREST COUNTRY
3046319	T03G	Common Supported Gable	1	1	T26758381 Job Reference (optional)

Builders FirstSource (Lake City,FL), Lake City, FL - 32055, 8.430 s Aug 16 2021 MiTek Industries, Inc. Mon Feb 7 06:04:08 2022 Page 1
ID:9Rsp_tPSI6LyCRUchohsVazGlxZ-D4_uVZX3edToif737mKt49abALjRQkomansKilzncv5

-1-6-0 | 15-8-0 | 31-4-0 | 32-10-0
1-6-0 | 15-8-0 | 15-8-0 | 1-6-0

Scale = 1:57.8

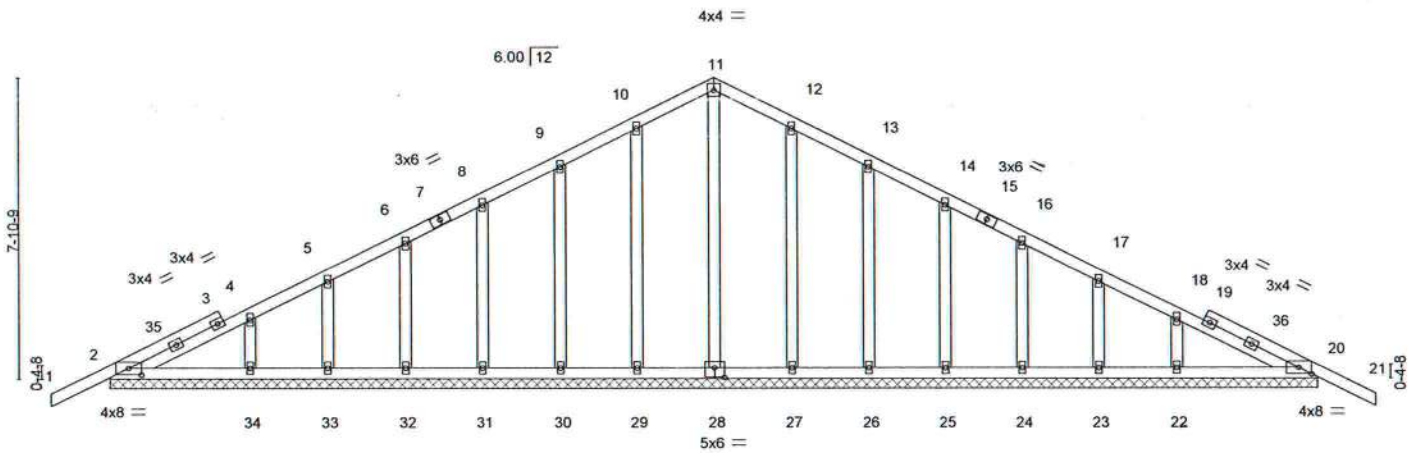

Plate Offsets (X,Y)-- [2:0-4-0,0-2-1], [20:0-4-0,0-2-1], [28:0-3-0,0-3-0]

LOADING (psf)		SPACING-	2-0-0	CSI.		DEFL.	in	(loc)	l/defl	L/d	PLATES	GRIP
TCLL	20.0	Plate Grip DOL	1.25	TC	0.13	Vert(LL)	-0.00	21	n/r	120	MT20	244/190
TCDL	7.0	Lumber DOL	1.25	BC	0.09	Vert(CT)	-0.00	21	n/r	120		
BCLL	0.0 *	Rep Stress Incr	YES	WB	0.14	Horz(CT)	0.01	20	n/a	n/a		
BCDL	10.0	Code FBC2020/TPI2014		Matrix-S							Weight: 191 lb	FT = 20%

LUMBER-
TOP CHORD 2x4 SP No.2
BOT CHORD 2x4 SP No.2
OTHERS 2x4 SP No.3

BRACING-
TOP CHORD Structural wood sheathing directly applied or 6-0-0 oc purlins.
BOT CHORD Rigid ceiling directly applied or 10-0-0 oc bracing.

REACTIONS. All bearings 31-4-0.
(lb) - Max Horz 2=119(LC 16)
Max Uplift All uplift 100 lb or less at joint(s) 2, 29, 30, 31, 32, 33, 34, 27, 26, 25, 24, 23, 22, 20
Max Grav All reactions 250 lb or less at joint(s) 2, 28, 29, 30, 31, 32, 33, 34, 27, 26, 25, 24, 23, 22, 20

FORCES. (lb) - Max. Comp./Max. Ten. - All forces 250 (lb) or less except when shown.

NOTES-
1) Unbalanced roof live loads have been considered for this design.
2) Wind: ASCE 7-16; Vult=130mph (3-second gust) Vasd=101mph; TCDL=4.2psf; BCDL=3.0psf; h=18ft; Cat. II; Exp B; Encl., GCpi=0.18; MWFRS (envelope) gable end zone and C-C Corner(3E) -1-6-0 to 1-6-0, Exterior(2N) 1-6-0 to 15-8-0, Corner(3R) 15-8-0 to 18-8-0, Exterior(2N) 18-8-0 to 32-10-0 zone;C-C for members and forces & MWFRS for reactions shown; Lumber DOL=1.60 plate grip DOL=1.60
3) Truss designed for wind loads in the plane of the truss only. For studs exposed to wind (normal to the face), see Standard Industry Gable End Details as applicable, or consult qualified building designer as per ANSI/TPI 1.
4) Building Designer / Project engineer responsible for verifying applied roof live load shown covers rain loading requirements specific to the use of this truss component.
5) All plates are 2x4 MT20 unless otherwise indicated.
6) Gable requires continuous bottom chord bearing.
7) Gable studs spaced at 2-0-0 oc.
8) This truss has been designed for a 10.0 psf bottom chord live load nonconcurrent with any other live loads.
9) * This truss has been designed for a live load of 20.0psf on the bottom chord in all areas where a rectangle 3-6-0 tall by 2-0-0 wide will fit between the bottom chord and any other members.
10) Provide mechanical connection (by others) of truss to bearing plate capable of withstanding 100 lb uplift at joint(s) 2, 29, 30, 31, 32, 33, 34, 27, 26, 25, 24, 23, 22, 20.

Philip J. O'Regan PE No.58126
MiTek USA, Inc. FL Cert 6634
6904 Parke East Blvd. Tampa FL 33610
Date:
February 8,2022

WARNING - Verify design parameters and READ NOTES ON THIS AND INCLUDED MITEK REFERENCE PAGE MII-7473 rev. 5/19/2020 BEFORE USE.
Design valid for use only with MiTek® connectors. This design is based only upon parameters shown, and is for an individual building component, not a truss system. Before use, the building designer must verify the applicability of design parameters and properly incorporate this design into the overall building design. Bracing indicated is to prevent buckling of individual truss web and/or chord members only. Additional temporary and permanent bracing is always required for stability and to prevent collapse with possible personal injury and property damage. For general guidance regarding the fabrication, storage, delivery, erection and bracing of trusses and truss systems, see ***ANSI/TPI1 Quality Criteria, DSB-89 and BCSI Building Component Safety Information*** available from Truss Plate Institute, 2670 Crain Highway, Suite 203 Waldorf, MD 20601

MiTek
6904 Parke East Blvd.
Tampa, FL 36610

Job	Truss	Truss Type	Qty	Ply	DAVID - TBD FOREST COUNTRY
3046319	T04	Common	10	1	T26758982 Job Reference (optional)

Builders FirstSource (Lake City,FL), Lake City, FL - 32055, 8.430 s Aug 16 2021 MiTek Industries, Inc. Mon Feb 7 06:04:09 2022 Page 1
ID:9Rsp_tPSI6LyCRUchohsVazGlxZ-hGYGivYhPxbfKpiFhUr6dM6gNltB94HvpRbtECzncv4

-1-6-0	6-1-12	11-9-14	18-8-0	25-6-3	31-2-4	37-4-0	38-10-0
1-6-0	6-1-12	5-8-2	6-10-3	6-10-3	5-8-2	6-1-12	1-6-0

Scale = 1:65.1

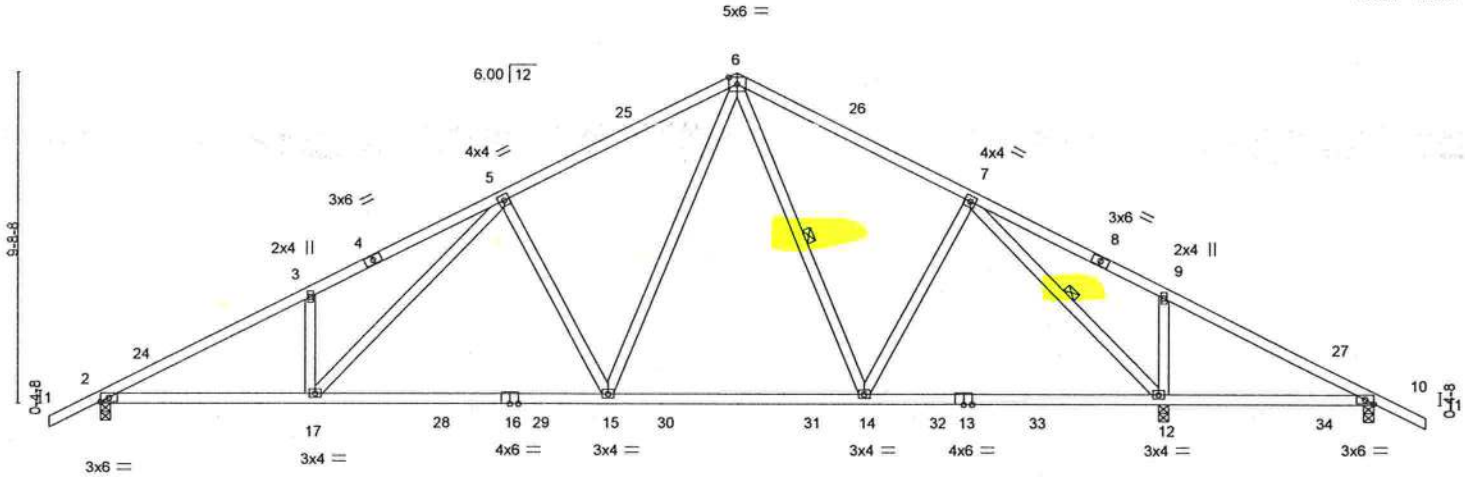

6-1-12	14-10-15	22-5-1	31-2-4	37-4-0
6-1-12	8-9-3	7-6-3	8-9-3	6-1-12

Plate Offsets (X,Y)-- [10:0-2-15,Edge]

LOADING (psf)		SPACING-	2-0-0	CSI.		DEFL.	in	(loc)	l/defl	L/d	PLATES	GRIP
TCLL	20.0	Plate Grip DOL	1.25	TC	0.48	Vert(LL)	0.09	12-23	>848	240	MT20	244/190
TCDL	7.0	Lumber DOL	1.25	BC	0.88	Vert(CT)	-0.42	15-17	>891	180		
BCLL	0.0 *	Rep Stress Incr	YES	WB	0.63	Horz(CT)	0.07	12	n/a	n/a		
BCDL	10.0	Code FBC2020/TPI2014		Matrix-MS							Weight: 204 lb	FT = 20%

LUMBER-
TOP CHORD 2x4 SP No.2
BOT CHORD 2x4 SP No.2
WEBS 2x4 SP No.3

BRACING-
TOP CHORD Structural wood sheathing directly applied or 3-6-8 oc purlins.
BOT CHORD Rigid ceiling directly applied or 6-0-0 oc bracing.
WEBS 1 Row at midpt 6-14, 7-12

REACTIONS. (size) 2=0-3-8, 12=0-3-8, 10=0-3-8
Max Horz 2=-145(LC 17)
Max Uplift 2=-263(LC 12), 12=-282(LC 13), 10=-83(LC 8)
Max Grav 2=1316(LC 2), 12=1830(LC 2), 10=200(LC 24)

FORCES. (lb) - Max. Comp./Max. Ten. - All forces 250 (lb) or less except when shown.
TOP CHORD 2-3=-2344/404, 3-5=-2338/508, 5-6=-1527/347, 6-7=-1185/295, 7-9=-28/446, 9-10=-90/427
BOT CHORD 2-17=-422/2067, 15-17=-285/1560, 14-15=-82/997, 12-14=-62/848, 10-12=-318/111
WEBS 7-14=-0/404, 7-12=-1693/252, 9-12=-326/190, 6-15=-208/882, 5-15=-552/273, 5-17=-200/737, 3-17=-293/184

NOTES-
1) Unbalanced roof live loads have been considered for this design.
2) Wind: ASCE 7-16; Vult=130mph (3-second gust) Vasd=101mph; TCDL=4.2psf; BCDL=3.0psf; h=18ft; Cat. II; Exp B; Encl., GCpi=0.18; MWFRS (envelope) gable end zone and C-C Exterior(2E) -1-6-0 to 1-6-0, Interior(1) 1-6-0 to 18-8-0, Exterior(2R) 18-8-0 to 21-8-0, Interior(1) 21-8-0 to 38-10-0 zone; porch right exposed;C-C for members and forces & MWFRS for reactions shown; Lumber DOL=1.60 plate grip DOL=1.60
3) Building Designer / Project engineer responsible for verifying applied roof live load shown covers rain loading requirements specific to the use of this truss component.
4) This truss has been designed for a 10.0 psf bottom chord live load nonconcurrent with any other live loads.
5) * This truss has been designed for a live load of 20.0psf on the bottom chord in all areas where a rectangle 3-6-0 tall by 2-0-0 wide will fit between the bottom chord and any other members, with BCDL = 10.0psf.
6) Provide mechanical connection (by others) of truss to bearing plate capable of withstanding 100 lb uplift at joint(s) 10 except (jt=lb) 2=263, 12=282.

Philip J. O'Regan PE No.58126
MiTek USA, Inc. FL Cert 6634
6904 Parke East Blvd. Tampa FL 33610
Date:
February 8,2022

WARNING - Verify design parameters and READ NOTES ON THIS AND INCLUDED MITEK REFERENCE PAGE MII-7473 rev. 5/19/2020 BEFORE USE.
Design valid for use only with MiTek® connectors. This design is based only upon parameters shown, and is for an individual building component, not a truss system. Before use, the building designer must verify the applicability of design parameters and properly incorporate this design into the overall building design. Bracing indicated is to prevent buckling of individual truss web and/or chord members only. Additional temporary and permanent bracing is always required for stability and to prevent collapse with possible personal injury and property damage. For general guidance regarding the fabrication, storage, delivery, erection and bracing of trusses and truss systems, see ***ANSI/TPI1 Quality Criteria, DSB-89 and BCSI Building Component Safety Information*** available from Truss Plate Institute, 2670 Crain Highway, Suite 203 Waldorf, MD 20601

MiTek
6904 Parke East Blvd.
Tampa, FL 36610

Job	Truss	Truss Type	Qty	Ply	DAVID - TBD FOREST COUNTRY
3046319	T04A	Common	1	1	T26758983 Job Reference (optional)

Builders FirstSource (Lake City,FL), Lake City, FL - 32055, 8.430 s Aug 16 2021 MiTek Industries, Inc. Mon Feb 7 06:04:10 2022 Page 1
ID:9Rsp_tPSI6LyCRUchohsVazGIxZ-AT6ewFZJAEjVxyHRFBNL9afpt9DJuTR325LQnezncv3

-1-6-0	6-1-12	11-9-14	18-8-0	25-6-3	31-4-0
1-6-0	6-1-12	5-8-2	6-10-3	6-10-3	5-9-13

Scale = 1:62.8

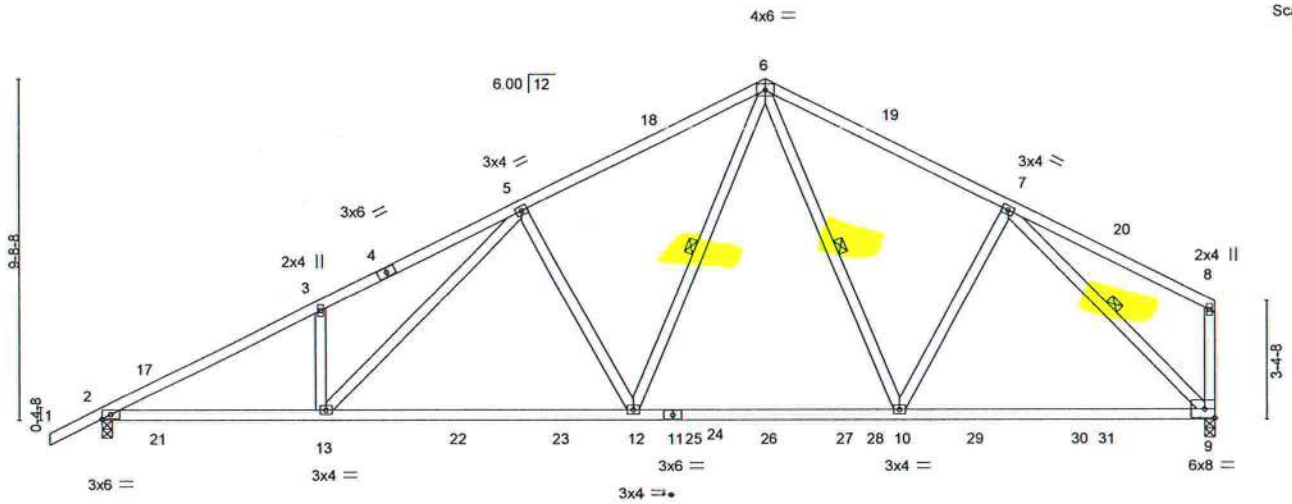

6-1-12	14-10-15	22-5-1	31-4-0
6-1-12	8-9-3	7-6-3	8-10-15

LOADING (psf)		SPACING-	2-0-0	CSI.		DEFL.	in	(loc)	l/defl	L/d	PLATES	GRIP
TCLL	20.0	Plate Grip DOL	1.25	TC	0.56	Vert(LL)	0.31	12-13	>999	240	MT20	244/190
TCDL	7.0	Lumber DOL	1.25	BC	0.89	Vert(CT)	-0.44	12-13	>860	180		
BCLL	0.0 *	Rep Stress Incr	YES	WB	0.83	Horz(CT)	0.07	9	n/a	n/a		
BCDL	10.0	Code FBC2020/TPI2014		Matrix-MS							Weight: 182 lb	FT = 20%

LUMBER-
TOP CHORD 2x4 SP No.2
BOT CHORD 2x4 SP No.2
WEBS 2x4 SP No.3

BRACING-
TOP CHORD Structural wood sheathing directly applied or 3-5-8 oc purlins, except end verticals.
BOT CHORD Rigid ceiling directly applied or 4-3-14 oc bracing.
WEBS 1 Row at midpt 6-10, 6-12, 7-9

REACTIONS. (size) 2=0-3-8, 9=0-3-8
Max Horz 2=214(LC 12)
Max Uplift 2=-310(LC 9), 9=-253(LC 9)
Max Grav 2=1361(LC 2), 9=1321(LC 2)

FORCES. (lb) - Max. Comp./Max. Ten. - All forces 250 (lb) or less except when shown.
TOP CHORD 2-3=-2443/1793, 3-5=-2436/1872, 5-6=-1625/1288, 6-7=-1344/1083
BOT CHORD 2-13=-1640/2135, 12-13=-1197/1628, 10-12=-744/1067, 9-10=-742/1040
WEBS 6-10=-246/271, 7-10=-188/304, 6-12=-753/875, 5-12=-552/378, 5-13=-642/737, 3-13=-291/184, 7-9=-1432/1004

NOTES-
1) Unbalanced roof live loads have been considered for this design.
2) Wind: ASCE 7-16; Vult=130mph (3-second gust) Vasd=101mph; TCDL=4.2psf; BCDL=3.0psf; h=18ft; Cat. II; Exp B; Encl., GCpi=0.18; MWFRS (envelope) gable end zone and C-C Exterior(2E) -1-6-0 to 1-6-0, Interior(1) 1-6-0 to 18-8-0, Exterior(2R) 18-8-0 to 21-8-0, Interior(1) 21-8-0 to 31-2-4 zone; porch right exposed;C-C for members and forces & MWFRS for reactions shown; Lumber DOL=1.60 plate grip DOL=1.60
3) Building Designer / Project engineer responsible for verifying applied roof live load shown covers rain loading requirements specific to the use of this truss component.
4) This truss has been designed for a 10.0 psf bottom chord live load nonconcurrent with any other live loads.
5) * This truss has been designed for a live load of 20.0psf on the bottom chord in all areas where a rectangle 3-6-0 tall by 2-0-0 wide will fit between the bottom chord and any other members, with BCDL = 10.0psf.
6) Provide mechanical connection (by others) of truss to bearing plate capable of withstanding 100 lb uplift at joint(s) except (jt=lb) 2=310, 9=253.

Philip J. O'Regan PE No.58126
MiTek USA, Inc. FL Cert 6634
6904 Parke East Blvd. Tampa FL 33610
Date:
February 8,2022

WARNING - Verify design parameters and READ NOTES ON THIS AND INCLUDED MITEK REFERENCE PAGE MII-7473 rev. 5/19/2020 BEFORE USE.
Design valid for use only with MiTek® connectors. This design is based only upon parameters shown, and is for an individual building component, not a truss system. Before use, the building designer must verify the applicability of design parameters and properly incorporate this design into the overall building design. Bracing indicated is to prevent buckling of individual truss web and/or chord members only. Additional temporary and permanent bracing is always required for stability and to prevent collapse with possible personal injury and property damage. For general guidance regarding the fabrication, storage, delivery, erection and bracing of trusses and truss systems, see ***ANSI/TPI1 Quality Criteria, DSB-89 and BCSI Building Component Safety Information*** available from Truss Plate Institute, 2670 Crain Highway, Suite 203 Waldorf, MD 20601

MiTek
6904 Parke East Blvd.
Tampa, FL 36610

Job	Truss	Truss Type	Qty	Ply	DAVID - TBD FOREST COUNTRY
3046319	T04G	GABLE	1	1	T26758984 Job Reference (optional)

Builders FirstSource (Lake City,FL), Lake City, FL - 32055, 8.430 s Aug 16 2021 MiTek Industries, Inc. Mon Feb 7 06:04:12 2022 Page 1
ID:9Rsp_tPSI6LyCRUchohsVazGIxZ-6rEOKxaaiszDBGRqMcPpE?k40zv4MR?MVPqXrWzncv1

-1-6-0	6-1-12	11-9-14	18-8-0	25-6-2	31-2-4	37-4-0	38-10-0
1-6-0	6-1-12	5-8-2	6-10-2	6-10-2	5-8-2	6-1-12	1-6-0

Scale = 1:70.3

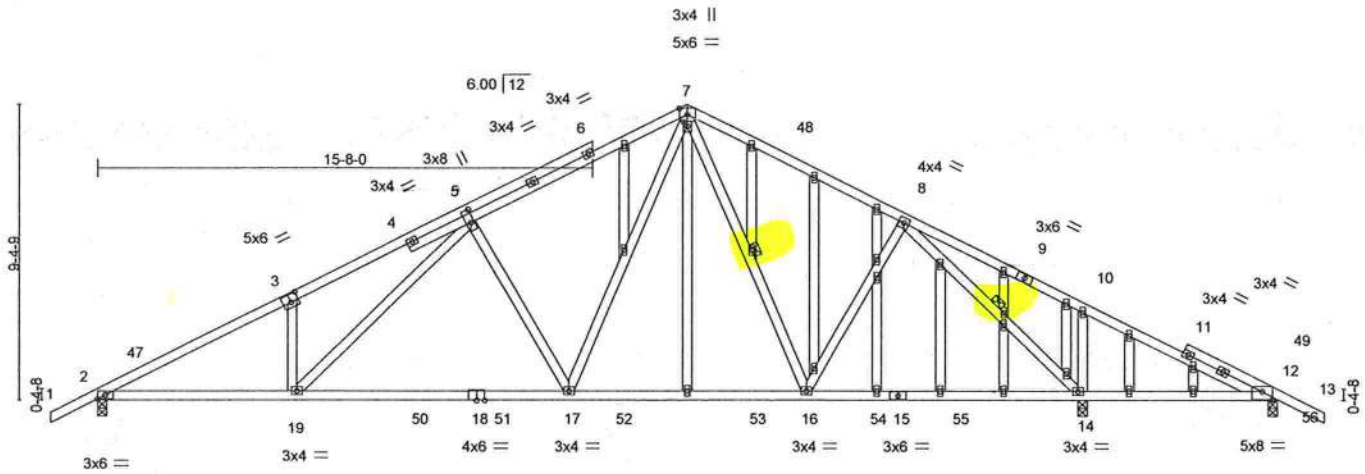

6-1-12	14-10-15	22-5-1	31-0-8	31-2-4	37-4-0
6-1-12	8-9-3	7-6-2	8-7-7	0-1-12	6-1-12

Plate Offsets (X,Y)-- [3:0-3-0,0-3-0], [5:0-5-0,0-1-4], [7:0-1-12,0-1-8], [12:0-4-0,0-3-1]

LOADING (psf)		SPACING-	2-0-0	CSI.		DEFL.	in	(loc)	l/defl	L/d	PLATES	GRIP
TCLL	20.0	Plate Grip DOL	1.25	TC	0.84	Vert(LL)	-0.22	17-19	>999	240	MT20	244/190
TCDL	7.0	Lumber DOL	1.25	BC	0.87	Vert(CT)	-0.41	17-19	>921	180		
BCLL	0.0 *	Rep Stress Incr	YES	WB	0.64	Horz(CT)	0.07	14	n/a	n/a		
BCDL	10.0	Code FBC2020/TPI2014		Matrix-MS							Weight: 275 lb	FT = 20%

LUMBER-

TOP CHORD	2x4 SP No.2
BOT CHORD	2x4 SP No.2
WEBS	2x4 SP No.3
OTHERS	2x4 SP No.3

BRACING-

TOP CHORD	Structural wood sheathing directly applied or 2-2-0 oc purlins.
BOT CHORD	Rigid ceiling directly applied or 6-0-0 oc bracing.
WEBS	1 Row at midpt 7-16, 8-14

REACTIONS. (size) 2=0-3-8, 12=0-3-8, 14=0-3-8
Max Horz 2=141(LC 12)
Max Uplift 2=-263(LC 12), 12=-58(LC 8), 14=-305(LC 13)
Max Grav 2=1311(LC 2), 12=179(LC 24), 14=1820(LC 2)

FORCES. (lb) - Max. Comp./Max. Ten. - All forces 250 (lb) or less except when shown.

TOP CHORD	2-3=-2323/403, 3-5=-2282/493, 5-7=-1541/342, 7-8=-1230/265, 8-10=-73/468, 10-12=-164/469
BOT CHORD	2-19=-417/2051, 17-19=-295/1593, 16-17=-88/1030, 14-16=-68/892, 12-14=-367/194
WEBS	8-16=0/377, 8-14=-1777/297, 10-14=-305/180, 7-17=-206/864, 5-17=-547/272, 5-19=-168/650

NOTES-

1) Unbalanced roof live loads have been considered for this design.
2) Wind: ASCE 7-16; Vult=130mph (3-second gust) Vasd=101mph; TCDL=4.2psf; BCDL=3.0psf; h=18ft; Cat. II; Exp B; Encl., GCpi=0.18; MWFRS (envelope) gable end zone and C-C Exterior(2E) -1-6-0 to 1-6-0, Interior(1) 1-6-0 to 18-8-0, Exterior(2R) 18-8-0 to 21-8-0, Interior(1) 21-8-0 to 38-10-0 zone; porch right exposed;C-C for members and forces & MWFRS for reactions shown; Lumber DOL=1.60 plate grip DOL=1.60
3) Truss designed for wind loads in the plane of the truss only. For studs exposed to wind (normal to the face), see Standard Industry Gable End Details as applicable, or consult qualified building designer as per ANSI/TPI 1.
4) Building Designer / Project engineer responsible for verifying applied roof live load shown covers rain loading requirements specific to the use of this truss component.
5) All plates are 2x4 MT20 unless otherwise indicated.
6) Gable studs spaced at 2-0-0 oc.
7) This truss has been designed for a 10.0 psf bottom chord live load nonconcurrent with any other live loads.
8) * This truss has been designed for a live load of 20.0psf on the bottom chord in all areas where a rectangle 3-6-0 tall by 2-0-0 wide will fit between the bottom chord and any other members, with BCDL = 10.0psf.
9) Provide mechanical connection (by others) of truss to bearing plate capable of withstanding 100 lb uplift at joint(s) 12 except (jt=lb) 2=263, 14=305.

Philip J. O'Regan PE No.58126
MiTek USA, Inc. FL Cert 6634
6904 Parke East Blvd. Tampa FL 33610
Date:
February 8,2022

WARNING - Verify design parameters and READ NOTES ON THIS AND INCLUDED MITEK REFERENCE PAGE MII-7473 rev. 5/19/2020 BEFORE USE.
Design valid for use only with MiTek® connectors. This design is based only upon parameters shown, and is for an individual building component, not a truss system. Before use, the building designer must verify the applicability of design parameters and properly incorporate this design into the overall building design. Bracing indicated is to prevent buckling of individual truss web and/or chord members only. Additional temporary and permanent bracing is always required for stability and to prevent collapse with possible personal injury and property damage. For general guidance regarding the fabrication, storage, delivery, erection and bracing of trusses and truss systems, see ***ANSI/TPI1 Quality Criteria, DSB-89 and BCSI Building Component Safety Information*** available from Truss Plate Institute, 2670 Crain Highway, Suite 203 Waldorf, MD 20601

MiTek
6904 Parke East Blvd.
Tampa, FL 36610

Job	Truss	Truss Type	Qty	Ply	DAVID - TBD FOREST COUNTRY
3046319	T05	Common	4	1	T26758985 Job Reference (optional)

Builders FirstSource (Lake City,FL), Lake City, FL - 32055, 8.430 s Aug 16 2021 MiTek Industries, Inc. Mon Feb 7 06:04:13 2022 Page 1
ID:9Rsp_tPSI6LyCRUchohsVazGIxZ-a2onYHbCT954oQ00wKw2nCHLGMEu5wZVk3Z5Nzzncv0

-1-6-0	6-1-12	11-9-14	18-8-0	25-6-3	31-4-0
1-6-0	6-1-12	5-8-2	6-10-2	6-10-3	5-9-13

Scale = 1:62.8

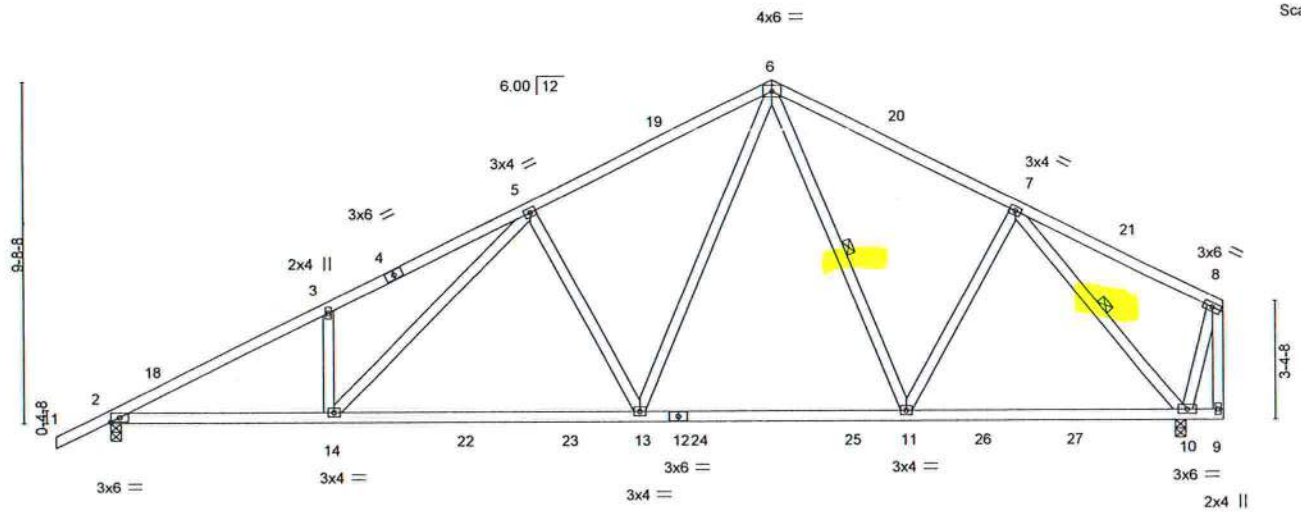

6-1-12	14-10-15	22-5-1	30-3-8	31-4-0
6-1-12	8-9-3	7-6-2	7-10-7	1-0-8

LOADING (psf)		SPACING-	2-0-0	CSI.		DEFL.	in	(loc)	l/defl	L/d	PLATES	GRIP
TCLL	20.0	Plate Grip DOL	1.25	TC	0.49	Vert(LL)	-0.23	13-14	>999	240	MT20	244/190
TCDL	7.0	Lumber DOL	1.25	BC	0.90	Vert(CT)	-0.41	13-14	>890	180		
BCLL	0.0 *	Rep Stress Incr	YES	WB	0.49	Horz(CT)	0.06	10	n/a	n/a		
BCDL	10.0	Code FBC2020/TPI2014		Matrix-MS							Weight: 186 lb	FT = 20%

LUMBER-
TOP CHORD 2x4 SP No.2
BOT CHORD 2x4 SP No.2
WEBS 2x4 SP No.3

BRACING-
TOP CHORD Structural wood sheathing directly applied or 3-6-6 oc purlins, except end verticals.
BOT CHORD Rigid ceiling directly applied or 8-4-3 oc bracing.
WEBS 1 Row at midpt 6-11, 7-10

REACTIONS. (size) 2=0-3-8, 10=0-3-8
Max Horz 2=214(LC 12)
Max Uplift 2=-262(LC 12), 10=-206(LC 13)
Max Grav 2=1320(LC 2), 10=1357(LC 2)

FORCES. (lb) - Max. Comp./Max. Ten. - All forces 250 (lb) or less except when shown.
TOP CHORD 2-3=-2352/404, 3-5=-2346/507, 5-6=-1537/341, 6-7=-1199/287
BOT CHORD 2-14=-491/2054, 13-14=-353/1549, 11-13=-151/983, 10-11=-140/874
WEBS 3-14=-293/184, 5-14=-200/734, 5-13=-552/273, 6-13=-206/889, 7-11=-3/354, 7-10=-1346/253

NOTES-
1) Unbalanced roof live loads have been considered for this design.
2) Wind: ASCE 7-16; Vult=130mph (3-second gust) Vasd=101mph; TCDL=4.2psf; BCDL=3.0psf; h=18ft; Cat. II; Exp B; Encl., GCpi=0.18; MWFRS (envelope) gable end zone and C-C Exterior(2E) -1-6-0 to 1-6-0, Interior(1) 1-6-0 to 18-8-0, Exterior(2R) 18-8-0 to 21-8-0, Interior(1) 21-8-0 to 31-2-4 zone;C-C for members and forces & MWFRS for reactions shown; Lumber DOL=1.60 plate grip DOL=1.60
3) Building Designer / Project engineer responsible for verifying applied roof live load shown covers rain loading requirements specific to the use of this truss component.
4) This truss has been designed for a 10.0 psf bottom chord live load nonconcurrent with any other live loads.
5) * This truss has been designed for a live load of 20.0psf on the bottom chord in all areas where a rectangle 3-6-0 tall by 2-0-0 wide will fit between the bottom chord and any other members, with BCDL = 10.0psf.
6) Provide mechanical connection (by others) of truss to bearing plate capable of withstanding 100 lb uplift at joint(s) except (jt=lb) 2=262, 10=206.

Philip J. O'Regan PE No.58126
MiTek USA, Inc. FL Cert 6634
6904 Parke East Blvd. Tampa FL 33610
Date:
February 8,2022

WARNING - Verify design parameters and READ NOTES ON THIS AND INCLUDED MITEK REFERENCE PAGE MII-7473 rev. 5/19/2020 BEFORE USE.
Design valid for use only with MiTek® connectors. This design is based only upon parameters shown, and is for an individual building component, not a truss system. Before use, the building designer must verify the applicability of design parameters and properly incorporate this design into the overall building design. Bracing indicated is to prevent buckling of individual truss web and/or chord members only. Additional temporary and permanent bracing is always required for stability and to prevent collapse with possible personal injury and property damage. For general guidance regarding the fabrication, storage, delivery, erection and bracing of trusses and truss systems, see ***ANSI/TPI1 Quality Criteria, DSB-89 and BCSI Building Component Safety Information*** available from Truss Plate Institute, 2670 Crain Highway, Suite 203 Waldorf, MD 20601

MiTek
6904 Parke East Blvd.
Tampa, FL 36610

Job	Truss	Truss Type	Qty	Ply	DAVID - TBD FOREST COUNTRY
3046319	T05G	GABLE	1	1	T26758986 Job Reference (optional)

Builders FirstSource (Lake City,FL), Lake City, FL - 32055, 8.430 s Aug 16 2021 MiTek Industries, Inc. Mon Feb 7 06:04:14 2022 Page 1
ID:9Rsp_tPSI6LyCRUchohsVazGIxZ-2EL9IccqETDxQabCU1RHKQqWhmaFqNFeziJewPzncv?

-1-6-0	6-1-12	12-4-14	18-8-0	25-6-3	31-4-0
1-6-0	6-1-12	6-3-2	6-3-2	6-10-3	5-9-13

Scale = 1:61.9

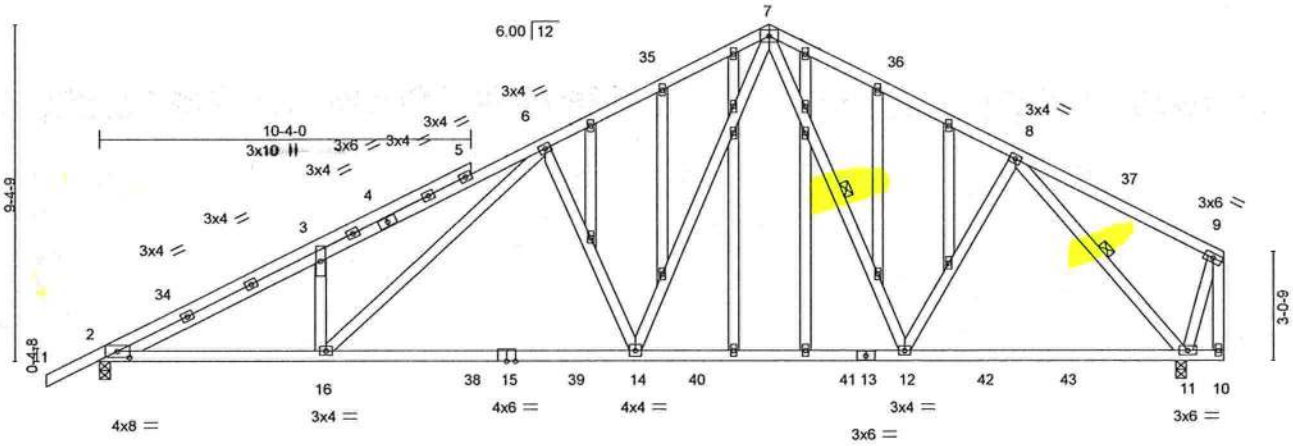

6-1-12	14-10-15	22-5-1	30-3-8	31-4-0
6-1-12	8-9-3	7-6-2	7-10-7	1-0-8

Plate Offsets (X,Y)-- [2:0-4-0,0-2-1]

LOADING (psf)		SPACING-	2-0-0	CSI.		DEFL.	in	(loc)	l/defl	L/d	PLATES	GRIP
TCLL	20.0	Plate Grip DOL	1.25	TC	0.51	Vert(LL)	-0.21	14-16	>999	240	MT20	244/190
TCDL	7.0	Lumber DOL	1.25	BC	0.89	Vert(CT)	-0.38	14-16	>953	180		
BCLL	0.0 *	Rep Stress Incr	YES	WB	0.46	Horz(CT)	0.07	11	n/a	n/a		
BCDL	10.0	Code FBC2020/TPI2014		Matrix-MS							Weight: 252 lb	FT = 20%

LUMBER-
TOP CHORD 2x4 SP No.2
BOT CHORD 2x4 SP No.2
WEBS 2x4 SP No.3
OTHERS 2x4 SP No.3

BRACING-
TOP CHORD Structural wood sheathing directly applied or 3-2-12 oc purlins, except end verticals.
BOT CHORD Rigid ceiling directly applied or 10-0-0 oc bracing, Except: 8-4-8 oc bracing: 2-16.
WEBS 1 Row at midpt 7-12, 8-11

REACTIONS. (size) 2=0-3-8, 11=0-3-8
Max Horz 2=203(LC 12)
Max Uplift 2=-266(LC 12), 11=-206(LC 13)
Max Grav 2=1319(LC 2), 11=1346(LC 2)

FORCES. (lb) - Max. Comp./Max. Ten. - All forces 250 (lb) or less except when shown.
TOP CHORD 2-3=-2379/412, 3-6=-2381/514, 6-7=-1589/354, 7-8=-1240/291
BOT CHORD 2-16=-494/2103, 14-16=-341/1570, 12-14=-151/1008, 11-12=-147/919
WEBS 3-16=-279/187, 6-16=-210/738, 6-14=-567/274, 7-14=-219/929, 8-12=0/329, 8-11=-1364/258

NOTES-
1) Unbalanced roof live loads have been considered for this design.
2) Wind: ASCE 7-16; Vult=130mph (3-second gust) Vasd=101mph; TCDL=4.2psf; BCDL=3.0psf; h=18ft; Cat. II; Exp B; Encl., GCpi=0.18; MWFRS (envelope) gable end zone and C-C Exterior(2E) -1-6-0 to 1-6-0, Interior(1) 1-6-0 to 18-8-0, Exterior(2R) 18-8-0 to 21-8-0, Interior(1) 21-8-0 to 31-2-4 zone;C-C for members and forces & MWFRS for reactions shown; Lumber DOL=1.60 plate grip DOL=1.60
3) Truss designed for wind loads in the plane of the truss only. For studs exposed to wind (normal to the face), see Standard Industry Gable End Details as applicable, or consult qualified building designer as per ANSI/TPI 1.
4) Building Designer / Project engineer responsible for verifying applied roof live load shown covers rain loading requirements specific to the use of this truss component.
5) All plates are 2x4 MT20 unless otherwise indicated.
6) Gable studs spaced at 2-0-0 oc.
7) This truss has been designed for a 10.0 psf bottom chord live load nonconcurrent with any other live loads.
8) * This truss has been designed for a live load of 20.0psf on the bottom chord in all areas where a rectangle 3-6-0 tall by 2-0-0 wide will fit between the bottom chord and any other members, with BCDL = 10.0psf.
9) Provide mechanical connection (by others) of truss to bearing plate capable of withstanding 100 lb uplift at joint(s) except (jt=lb) 2=266, 11=206.

Philip J. O'Regan PE No.58126
MiTek USA, Inc. FL Cert 6634
6904 Parke East Blvd. Tampa FL 33610
Date:
February 8,2022

WARNING - Verify design parameters and READ NOTES ON THIS AND INCLUDED MITEK REFERENCE PAGE MII-7473 rev. 5/19/2020 BEFORE USE.
Design valid for use only with MiTek® connectors. This design is based only upon parameters shown, and is for an individual building component, not a truss system. Before use, the building designer must verify the applicability of design parameters and properly incorporate this design into the overall building design. Bracing indicated is to prevent buckling of individual truss web and/or chord members only. Additional temporary and permanent bracing is always required for stability and to prevent collapse with possible personal injury and property damage. For general guidance regarding the fabrication, storage, delivery, erection and bracing of trusses and truss systems, see ***ANSI/TPI1 Quality Criteria, DSB-89 and BCSI Building Component Safety Information*** available from Truss Plate Institute, 2670 Crain Highway, Suite 203 Waldorf, MD 20601

MiTek
6904 Parke East Blvd.
Tampa, FL 36610

Job	Truss	Truss Type	Qty	Ply	DAVID - TBD FOREST COUNTRY
3046319	T06	Half Hip Girder	1	1	T26758997 Job Reference (optional)

Builders FirstSource (Lake City,FL), Lake City, FL - 32055, 8.430 s Aug 16 2021 MiTek Industries, Inc. Mon Feb 7 06:04:16 2022 Page 1
ID:9Rsp_tPSI6LyCRUchohsVazGlxZ-_cTvAle4m4UfftlbbSTlPrvlkaPQICGxQ0olzIzncuz

-1-6-0	3-11-15	7-0-0	10-6-6	15-11-14	21-5-8	26-11-1	31-4-0
1-6-0	3-11-15	3-0-1	3-6-6	5-5-8	5-5-9	5-5-9	4-4-15

Scale = 1:55.3

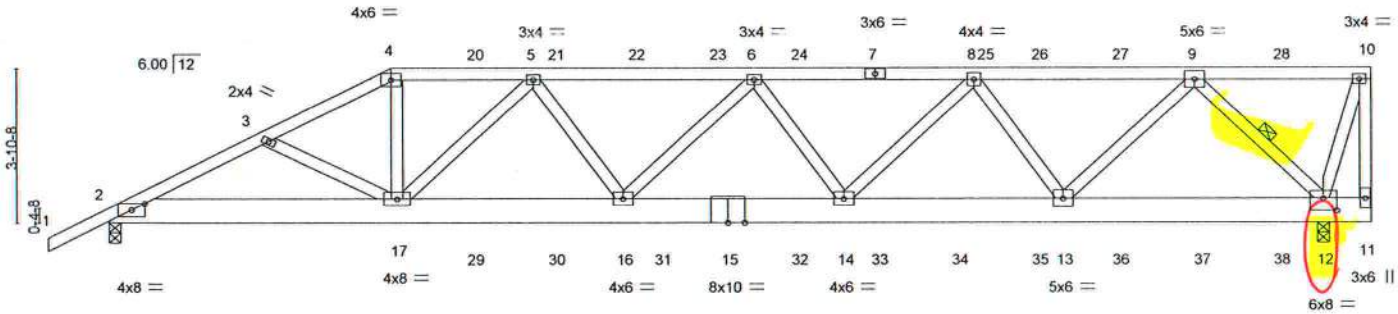

7-0-0	12-9-1	18-2-9	23-8-3	30-3-8	31-4-0
7-0-0	5-9-1	5-5-8	5-5-10	6-7-5	1-0-8

Plate Offsets (X,Y)-- [2:0-4-0,0-1-15], [12:0-4-0,0-3-12]

LOADING (psf)		SPACING- 2-0-0		CSI.		DEFL.	in	(loc)	l/defl	L/d	PLATES	GRIP
TCLL	20.0	Plate Grip DOL	1.25	TC	0.92	Vert(LL)	-0.20	14-16	>999	240	MT20	244/190
TCDL	7.0	Lumber DOL	1.25	BC	0.27	Vert(CT)	-0.39	14-16	>928	180		
BCLL	0.0 *	Rep Stress Incr	NO	WB	0.81	Horz(CT)	0.07	12	n/a	n/a		
BCDL	10.0	Code FBC2020/TPI2014		Matrix-MS							Weight: 215 lb	FT = 20%

LUMBER-

TOP CHORD	2x4 SP No.2 *Except* 4-7: 2x4 SP M 31
BOT CHORD	2x8 SP 2400F 2.0E
WEBS	2x4 SP No.3

BRACING-

TOP CHORD	Structural wood sheathing directly applied or 1-9-8 oc purlins, except end verticals.
BOT CHORD	Rigid ceiling directly applied or 10-0-0 oc bracing.
WEBS	1 Row at midpt 9-12

REACTIONS. (size) 2=0-3-8, 12=0-3-8
Max Horz 2=139(LC 8)
Max Uplift 2=-539(LC 8), 12=-661(LC 5)
Max Grav 2=2241(LC 1), 12=2709(LC 1)

FORCES. (lb) - Max. Comp./Max. Ten. - All forces 250 (lb) or less except when shown.

TOP CHORD	2-3=-4380/1040, 3-4=-4230/994, 4-5=-3823/922, 5-6=-5116/1198, 6-8=-5006/1186, 8-9=-3476/810, 10-11=-293/47
BOT CHORD	2-17=-999/3874, 16-17=-1188/4803, 14-16=-1307/5287, 13-14=-1076/4327, 12-13=-527/2014
WEBS	4-17=-303/1588, 5-17=-1433/431, 5-16=-59/602, 6-16=-283/171, 6-14=-515/252, 8-14=-192/988, 8-13=-1563/488, 9-13=-412/2126, 9-12=-2903/796

NOTES-

1) Unbalanced roof live loads have been considered for this design.
2) Wind: ASCE 7-16; Vult=130mph (3-second gust) Vasd=101mph; TCDL=4.2psf; BCDL=3.0psf; h=18ft; Cat. II; Exp B; Encl., GCpi=0.18; MWFRS (envelope) gable end zone; Lumber DOL=1.60 plate grip DOL=1.60
3) Building Designer / Project engineer responsible for verifying applied roof live load shown covers rain loading requirements specific to the use of this truss component.
4) Provide adequate drainage to prevent water ponding.
5) This truss has been designed for a 10.0 psf bottom chord live load nonconcurrent with any other live loads.
6) * This truss has been designed for a live load of 20.0psf on the bottom chord in all areas where a rectangle 3-6-0 tall by 2-0-0 wide will fit between the bottom chord and any other members.
7) Provide mechanical connection (by others) of truss to bearing plate capable of withstanding 100 lb uplift at joint(s) except (jt=lb) 2=539, 12=661.
8) Hanger(s) or other connection device(s) shall be provided sufficient to support concentrated load(s) 128 lb down and 87 lb up at 7-0-0, 110 lb down and 87 lb up at 9-0-12, 110 lb down and 87 lb up at 11-0-12, 110 lb down and 87 lb up at 13-0-12, 110 lb down and 87 lb up at 15-0-12, 110 lb down and 87 lb up at 17-0-12, 110 lb down and 80 lb up at 19-0-12, 110 lb down and 87 lb up at 21-0-12, 110 lb down and 87 lb up at 23-0-12, 110 lb down and 87 lb up at 25-0-12, 110 lb down and 87 lb up at 27-0-12, and 110 lb down and 87 lb up at 29-0-12, and 133 lb down and 85 lb up at 31-2-4 on top chord, and 335 lb down and 73 lb up at 7-0-0, 86 lb down at 9-0-12, 86 lb down at 11-0-12, 86 lb down at 13-0-12, 86 lb down at 15-0-12, 86 lb down at 17-0-12, 86 lb down at 19-0-12, 86 lb down at 21-0-12, 86 lb down at 23-0-12, 86 lb down at 25-0-12, 86 lb down at 27-0-12, and 86 lb down at 29-0-12, and 103 lb down at 31-2-4 on bottom chord. The design/selection of such connection device(s) is the responsibility of others.
9) In the LOAD CASE(S) section, loads applied to the face of the truss are noted as front (F) or back (B).

Philip J. O'Regan PE No.58126
MiTek USA, Inc. FL Cert 6634
6904 Parke East Blvd. Tampa FL 33610
Date:
February 8,2022

LOAD CASE(S) Standard

WARNING - Verify design parameters and READ NOTES ON THIS AND INCLUDED MITEK REFERENCE PAGE MII-7473 rev. 5/19/2020 BEFORE USE.
Design valid for use only with MiTek® connectors. This design is based only upon parameters shown, and is for an individual building component, not a truss system. Before use, the building designer must verify the applicability of design parameters and properly incorporate this design into the overall building design. Bracing indicated is to prevent buckling of individual truss web and/or chord members only. Additional temporary and permanent bracing is always required for stability and to prevent collapse with possible personal injury and property damage. For general guidance regarding the fabrication, storage, delivery, erection and bracing of trusses and truss systems, see ***ANSI/TPI1 Quality Criteria, DSB-89 and BCSI Building Component Safety Information*** available from Truss Plate Institute, 2670 Crain Highway, Suite 203 Waldorf, MD 20601

MiTek
6904 Parke East Blvd.
Tampa, FL 36610

LOAD CASE(S) Standard

1) Dead + Roof Live (balanced): Lumber Increase=1.25, Plate Increase=1.25
   Uniform Loads (plf)
   Vert: 1-4=-54, 4-10=-54, 2-11=-20
   Concentrated Loads (lb)
   Vert: 4=-110(B) 7=-110(B) 10=-133(B) 11=-73(B) 15=-64(B) 17=-335(B) 9=-110(B) 20=-110(B) 21=-110(B) 22=-110(B) 23=-110(B) 24=-110(B) 25=-110(B) 26=-110(B) 27=-110(B) 28=-110(B) 29=-64(B) 30=-64(B) 31=-64(B) 32=-64(B) 33=-64(B) 34=-64(B) 35=-64(B) 36=-64(B) 37=-64(B) 38=-64(B)

WARNING - Verify design parameters and READ NOTES ON THIS AND INCLUDED MITEK REFERENCE PAGE MII-7473 rev. 5/19/2020 BEFORE USE.
Design valid for use only with MiTek® connectors. This design is based only upon parameters shown, and is for an individual building component, not a truss system. Before use, the building designer must verify the applicability of design parameters and properly incorporate this design into the overall building design. Bracing indicated is to prevent buckling of individual truss web and/or chord members only. Additional temporary and permanent bracing is always required for stability and to prevent collapse with possible personal injury and property damage. For general guidance regarding the fabrication, storage, delivery, erection and bracing of trusses and truss systems, see ***ANSI/TPI1 Quality Criteria, DSB-89 and BCSI Building Component Safety Information*** available from Truss Plate Institute, 2670 Crain Highway, Suite 203 Waldorf, MD 20601

MiTek
6904 Parke East Blvd.
Tampa, FL 36610

Job	Truss	Truss Type	Qty	Ply	DAVID - TBD FOREST COUNTRY
3046319	T07	Half Hip	1	1	T26758988 Job Reference (optional)

Builders FirstSource (Lake City,FL), Lake City, FL - 32055, 8.430 s Aug 16 2021 MiTek Industries, Inc. Mon Feb 7 06:04:16 2022 Page 1
ID:9Rsp_lPSI6LyCRUchohsVazGlxZ-_cTvAle4m4UfftlbbSTlPrvpnaHYlFxxQ0olzlzncuz

-1-6-0 | 4-9-8 | 9-0-0 | 16-1-2 | 23-0-7 | 31-4-0
1-6-0 | 4-9-8 | 4-2-8 | 7-1-2 | 6-11-5 | 8-3-9

Scale = 1:55.3

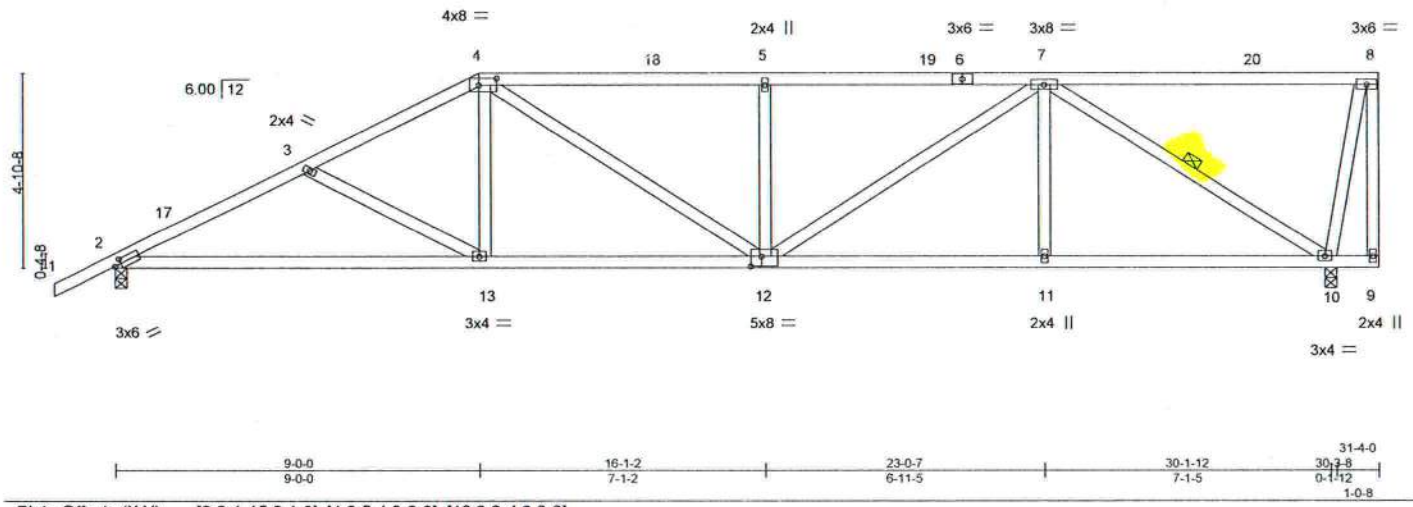

9-0-0 | 16-1-2 | 23-0-7 | 30-1-12 | 31-4-0
9-0-0 | 7-1-2 | 6-11-5 | 7-1-5 | 0-1-12 | 1-0-8

Plate Offsets (X,Y)-- [2:0-1-15,0-1-8], [4:0-5-4,0-2-0], [12:0-3-4,0-3-0]

LOADING (psf)		SPACING-	2-0-0	CSI.		DEFL.	in	(loc)	l/defl	L/d	PLATES	GRIP
TCLL	20.0	Plate Grip DOL	1.25	TC	0.66	Vert(LL)	-0.15	13-16	>999	240	MT20	244/190
TCDL	7.0	Lumber DOL	1.25	BC	0.77	Vert(CT)	-0.32	13-16	>999	180		
BCLL	0.0 *	Rep Stress Incr	YES	WB	0.64	Horz(CT)	0.08	10	n/a	n/a		
BCDL	10.0	Code FBC2020/TPI2014		Matrix-MS							Weight: 172 lb	FT = 20%

LUMBER-
TOP CHORD 2x4 SP No.2
BOT CHORD 2x4 SP No.2
WEBS 2x4 SP No.3

BRACING-
TOP CHORD Structural wood sheathing directly applied or 3-1-2 oc purlins, except end verticals.
BOT CHORD Rigid ceiling directly applied or 8-1-3 oc bracing.
WEBS 1 Row at midpt 7-10

REACTIONS. (size) 2=0-3-8, 10=0-3-8
Max Horz 2=172(LC 12)
Max Uplift 2=-282(LC 12), 10=-296(LC 9)
Max Grav 2=1196(LC 1), 10=1193(LC 1)

FORCES. (lb) - Max. Comp./Max. Ten. - All forces 250 (lb) or less except when shown.
TOP CHORD 2-3=-2049/482, 3-4=-1799/411, 4-5=-1871/450, 5-7=-1879/454
BOT CHORD 2-13=-530/1804, 12-13=-398/1571, 11-12=-344/1391, 10-11=-344/1391
WEBS 3-13=-274/150, 4-13=-21/393, 4-12=-161/459, 5-12=-388/181, 7-12=-217/583, 7-11=0/291, 7-10=-1662/425

NOTES-
1) Unbalanced roof live loads have been considered for this design.
2) Wind: ASCE 7-16; Vult=130mph (3-second gust) Vasd=101mph; TCDL=4.2psf; BCDL=3.0psf; h=18ft; Cat. II; Exp B; Encl., GCpi=0.18; MWFRS (envelope) gable end zone and C-C Exterior(2E) -1-6-0 to 1-6-0, Interior(1) 1-6-0 to 9-0-0, Exterior(2R) 9-0-0 to 13-2-15, Interior(1) 13-2-15 to 31-2-4 zone;C-C for members and forces & MWFRS for reactions shown; Lumber DOL=1.60 plate grip DOL=1.60
3) Building Designer / Project engineer responsible for verifying applied roof live load shown covers rain loading requirements specific to the use of this truss component.
4) Provide adequate drainage to prevent water ponding.
5) This truss has been designed for a 10.0 psf bottom chord live load nonconcurrent with any other live loads.
6) * This truss has been designed for a live load of 20.0psf on the bottom chord in all areas where a rectangle 3-6-0 tall by 2-0-0 wide will fit between the bottom chord and any other members.
7) Provide mechanical connection (by others) of truss to bearing plate capable of withstanding 100 lb uplift at joint(s) except (jt=lb) 2=282, 10=296.

PHILIP J. O'REGAN
LICENSE
No 58126
STATE OF
FLORIDA
PROFESSIONAL ENGINEER

Philip J. O'Regan PE No.58126
MiTek USA, Inc. FL Cert 6634
6904 Parke East Blvd. Tampa FL 33610
Date:
February 8,2022

WARNING - Verify design parameters and READ NOTES ON THIS AND INCLUDED MITEK REFERENCE PAGE MII-7473 rev. 5/19/2020 BEFORE USE.
Design valid for use only with MiTek® connectors. This design is based only upon parameters shown, and is for an individual building component, not a truss system. Before use, the building designer must verify the applicability of design parameters and properly incorporate this design into the overall building design. Bracing indicated is to prevent buckling of individual truss web and/or chord members only. Additional temporary and permanent bracing is always required for stability and to prevent collapse with possible personal injury and property damage. For general guidance regarding the fabrication, storage, delivery, erection and bracing of trusses and truss systems, see ***ANSI/TPI1 Quality Criteria, DSB-89 and BCSI Building Component Safety Information*** available from Truss Plate Institute, 2670 Crain Highway, Suite 203 Waldorf, MD 20601

MiTek
6904 Parke East Blvd.
Tampa, FL 36610

Job	Truss	Truss Type	Qty	Ply	DAVID - TBD FOREST COUNTRY
3046319	V01	GABLE	1	1	T26758989 Job Reference (optional)

Builders FirstSource (Lake City,FL), Lake City, FL - 32055, 8.430 s Aug 16 2021 MiTek Industries, Inc. Mon Feb 7 06:04:17 2022 Page 1
ID:9Rsp_tPSI6LyCRUchohsVazGIxZ-Sp1HOeeiXOcWH1Jn99?_x2S7z_oU1qb5fgXIWkzncuy

8-9-8 | 17-7-0
8-9-8 | 8-9-8

Scale = 1:28.3

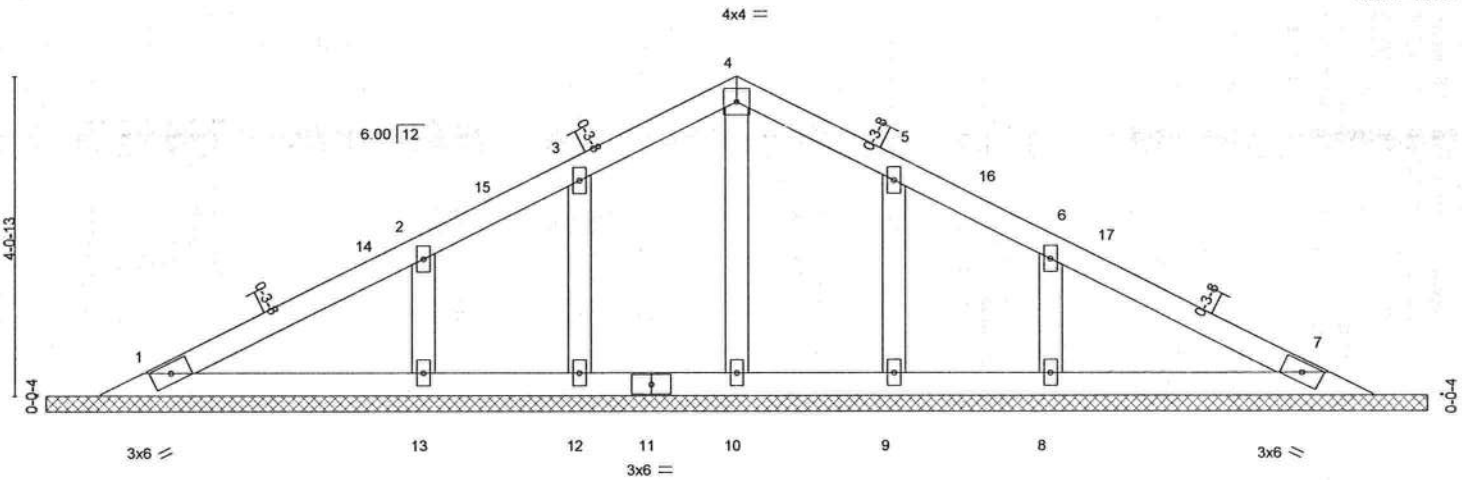

17-7-0
17-7-0

LOADING (psf)		SPACING- 2-0-0		CSI.		DEFL.	in	(loc)	l/defl	L/d	PLATES	GRIP
TCLL	20.0	Plate Grip DOL	1.25	TC	0.12	Vert(LL)	n/a	-	n/a	999	MT20	244/190
TCDL	7.0	Lumber DOL	1.25	BC	0.09	Vert(CT)	n/a	-	n/a	999		
BCLL	0.0 *	Rep Stress Incr	YES	WB	0.04	Horz(CT)	0.00	7	n/a	n/a		
BCDL	10.0	Code FBC2020/TPI2014		Matrix-S							Weight: 66 lb	FT = 20%

LUMBER-
TOP CHORD 2x4 SP No.2
BOT CHORD 2x4 SP No.2
OTHERS 2x4 SP No.3

BRACING-
TOP CHORD Structural wood sheathing directly applied or 6-0-0 oc purlins.
BOT CHORD Rigid ceiling directly applied or 10-0-0 oc bracing.

TRUSS DESIGNED FOR WIND LOADS IN THE PLANE OF THE TRUSS ONLY. FOR STUDS EXPOSED TO WIND (NORMAL TO THE FACE), SEE STANDARD INDUSTRY GABLE END DETAILS AS APPLICABLE, OR CONSULT QUALIFIED BUILDING DESIGNER AS PER ANSI/TPI 1.

REACTIONS. All bearings 17-7-0.
(lb) - Max Horz 1=54(LC 12)
Max Uplift All uplift 100 lb or less at joint(s) 1, 7, 12, 13, 9, 8
Max Grav All reactions 250 lb or less at joint(s) 1, 7, 10, 12, 9 except 13=263(LC 1), 8=263(LC 1)

FORCES. (lb) - Max. Comp./Max. Ten. - All forces 250 (lb) or less except when shown.

NOTES-
1) Unbalanced roof live loads have been considered for this design.
2) Wind: ASCE 7-16; Vult=130mph (3-second gust) Vasd=101mph; TCDL=4.2psf; BCDL=3.0psf; h=18ft; Cat. II; Exp B; Encl., GCpi=0.18; MWFRS (envelope) gable end zone and C-C Exterior(2E) 1-3-7 to 4-3-7, Interior(1) 4-3-7 to 8-9-8, Exterior(2R) 8-9-8 to 11-9-8, Interior(1) 11-9-8 to 16-3-9 zone;C-C for members and forces & MWFRS for reactions shown; Lumber DOL=1.60 plate grip DOL=1.60
3) Building Designer / Project engineer responsible for verifying applied roof live load shown covers rain loading requirements specific to the use of this truss component.
4) All plates are 2x4 MT20 unless otherwise indicated.
5) Gable requires continuous bottom chord bearing.
6) This truss has been designed for a 10.0 psf bottom chord live load nonconcurrent with any other live loads.
7) * This truss has been designed for a live load of 20.0psf on the bottom chord in all areas where a rectangle 3-6-0 tall by 2-0-0 wide will fit between the bottom chord and any other members.
8) Provide mechanical connection (by others) of truss to bearing plate capable of withstanding 100 lb uplift at joint(s) 1, 7, 12, 13, 9, 8.

PHILIP J. O'REGAN
LICENSE
No 58126
STATE OF
FLORIDA
PROFESSIONAL ENGINEER

Philip J. O'Regan PE No.58126
MiTek USA, Inc. FL Cert 6634
6904 Parke East Blvd. Tampa FL 33610
Date:
February 8,2022

WARNING - Verify design parameters and READ NOTES ON THIS AND INCLUDED MITEK REFERENCE PAGE MII-7473 rev. 5/19/2020 BEFORE USE.
Design valid for use only with MiTek® connectors. This design is based only upon parameters shown, and is for an individual building component, not a truss system. Before use, the building designer must verify the applicability of design parameters and properly incorporate this design into the overall building design. Bracing indicated is to prevent buckling of individual truss web and/or chord members only. Additional temporary and permanent bracing is always required for stability and to prevent collapse with possible personal injury and property damage. For general guidance regarding the fabrication, storage, delivery, erection and bracing of trusses and truss systems, see ***ANSI/TPI1 Quality Criteria, DSB-89 and BCSI Building Component Safety Information*** available from Truss Plate Institute, 2670 Crain Highway, Suite 203 Waldorf, MD 20601

MiTek
6904 Parke East Blvd.
Tampa, FL 36610

Symbols

PLATE LOCATION AND ORIENTATION

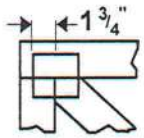

Center plate on joint unless x, y offsets are indicated. Dimensions are in ft-in-sixteenths. Apply plates to both sides of truss and fully embed teeth.

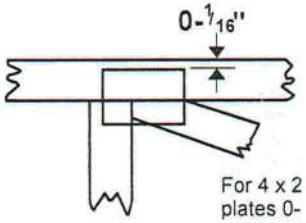

For 4 x 2 orientation, locate plates 0- 1/16" from outside edge of truss.

This symbol indicates the required direction of slots in connector plates.

*** Plate location details available in MiTek 20/20 software or upon request.**

PLATE SIZE

4 x 4

The first dimension is the plate width measured perpendicular to slots. Second dimension is the length parallel to slots.

LATERAL BRACING LOCATION

Indicated by symbol shown and/or by text in the bracing section of the output. Use T or I bracing if indicated.

BEARING

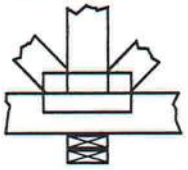

Indicates location where bearings (supports) occur. Icons vary but reaction section indicates joint number where bearings occur. Min size shown is for crushing only.

Industry Standards:

ANSI/TPI1: National Design Specification for Metal Plate Connected Wood Truss Construction.
DSB-89: Design Standard for Bracing.
BCSI: Building Component Safety Information, Guide to Good Practice for Handling, Installing & Bracing of Metal Plate Connected Wood Trusses.

Numbering System

dimensions shown in ft-in-sixteenths
(Drawings not to scale)

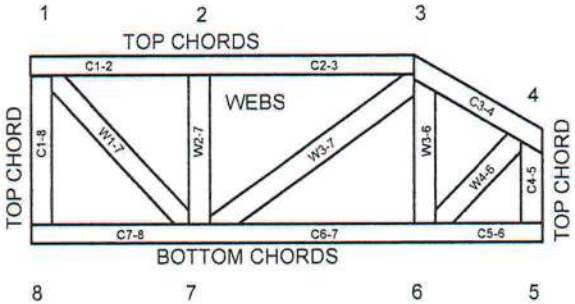

JOINTS ARE GENERALLY NUMBERED/LETTERED CLOCKWISE AROUND THE TRUSS STARTING AT THE JOINT FARTHEST TO THE LEFT.

CHORDS AND WEBS ARE IDENTIFIED BY END JOINT NUMBERS/LETTERS.

PRODUCT CODE APPROVALS

ICC-ES Reports:

ESR-1311, ESR-1352, ESR1988
ER-3907, ESR-2362, ESR-1397, ESR-3282

Trusses are designed for wind loads in the plane of the truss unless otherwise shown.

Lumber design values are in accordance with ANSI/TPI 1 section 6.3 These truss designs rely on lumber values established by others.

© 2012 MiTek® All Rights Reserved

MiTek Engineering Reference Sheet: MII-7473 rev. 5/19/2020

General Safety Notes

Failure to Follow Could Cause Property Damage or Personal Injury

1. Additional stability bracing for truss system, e.g. diagonal or X-bracing, is always required. See BCSI.
2. Truss bracing must be designed by an engineer. For wide truss spacing, individual lateral braces themselves may require bracing, or alternative Tor I bracing should be considered.
3. Never exceed the design loading shown and never stack materials on inadequately braced trusses.
4. Provide copies of this truss design to the building designer, erection supervisor, property owner and all other interested parties.
5. Cut members to bear tightly against each other.
6. Place plates on each face of truss at each joint and embed fully. Knots and wane at joint locations are regulated by ANSI/TPI 1.
7. Design assumes trusses will be suitably protected from the environment in accord with ANSI/TPI 1.
8. Unless otherwise noted, moisture content of lumber shall not exceed 19% at time of fabrication.
9. Unless expressly noted, this design is not applicable for use with fire retardant, preservative treated, or green lumber.
10. Camber is a non-structural consideration and is the responsibility of truss fabricator. General practice is to camber for dead load deflection.
11. Plate type, size, orientation and location dimensions indicated are minimum plating requirements.
12. Lumber used shall be of the species and size, and in all respects, equal to or better than that specified.
13. Top chords must be sheathed or purlins provided at spacing indicated on design.
14. Bottom chords require lateral bracing at 10 ft. spacing, or less, if no ceiling is installed, unless otherwise noted.
15. Connections not shown are the responsibility of others.
16. Do not cut or alter truss member or plate without prior approval of an engineer.
17. Install and load vertically unless indicated otherwise.
18. Use of green or treated lumber may pose unacceptable environmental, health or performance risks. Consult with project engineer before use.
19. Review all portions of this design (front, back, words and pictures) before use. Reviewing pictures alone is not sufficient.
20. Design assumes manufacture in accordance with ANSI/TPI 1 Quality Criteria.
21. The design does not take into account any dynamic or other loads other than those expressly stated.

AUGUST 1, 2016	T-BRACE / I-BRACE DETAIL WITH 2X BRACE ONLY	MII-T-BRACE 2

MiTek USA, Inc.

ENGINEERED BY TRENCO A MiTek Affiliate

Note: T-Bracing / I-Bracing to be used when continuous lateral bracing is impractical. T-Brace / I-Brace must cover 90% of web length.

Note: This detail NOT to be used to convert T-Brace / I-Brace webs to continuous lateral braced webs.

Nailing Pattern		
T-Brace size	Nail Size	Nail Spacing
2x4 or 2x6 or 2x8	10d (0.131" X 3")	6" o.c.
Note: Nail along entire length of T-Brace / I-Brace (On Two-Ply's Nail to Both Plies)		

	Brace Size for One-Ply Truss	
	Specified Continuous Rows of Lateral Bracing	
Web Size	1	2
2x3 or 2x4	2x4 T-Brace	2x4 I-Brace
2x6	2x6 T-Brace	2x6 I-Brace
2x8	2x8 T-Brace	2x8 I-Brace

	Brace Size for Two-Ply Truss	
	Specified Continuous Rows of Lateral Bracing	
Web Size	1	2
2x3 or 2x4	2x4 T-Brace	2x4 I-Brace
2x6	2x6 T-Brace	2x6 I-Brace
2x8	2x8 T-Brace	2x8 I-Brace

T-Brace / I-Brace must be same species and grade (or better) as web member.

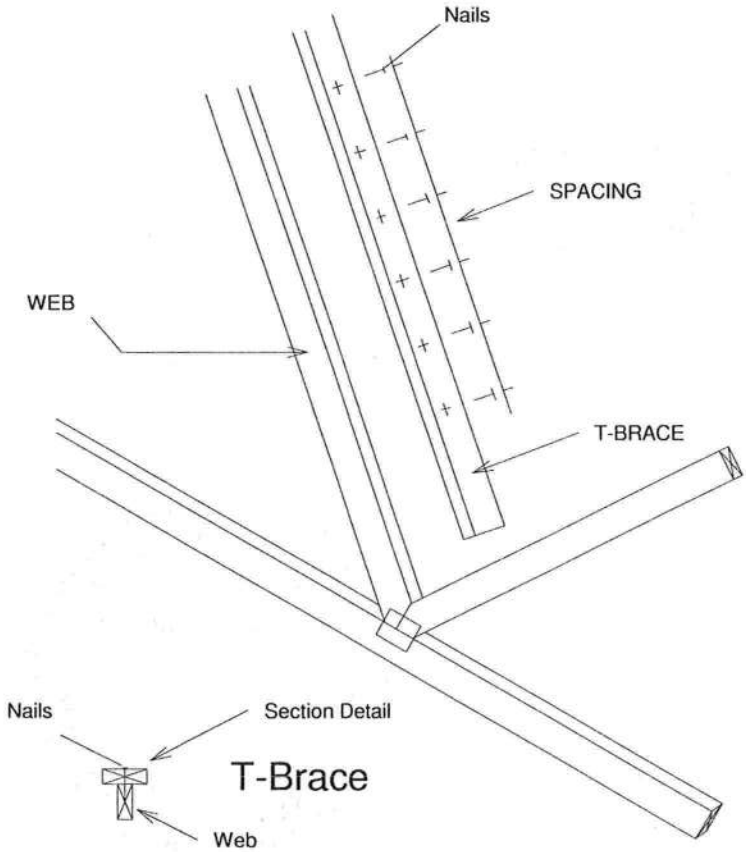

T-Brace

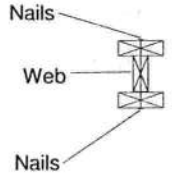

I-Brace

Thomas A. Albani PE No.39380
MiTek USA, Inc. FL Cert 6634
6904 Parke East Blvd. Tampa FL 33610
Date:
February 12, 2018

AUGUST 1, 2016	SCAB-BRACE DETAIL	MII-SCAB-BRACE

MiTek USA, Inc.

MiTek USA, Inc.

ENGINEERED BY TRENCO A MiTek Affiliate

Note: Scab-Bracing to be used when continuous lateral bracing at midpoint (or T-Brace) is impractical.
Scab must cover full length of web +/- 6".

*** THIS DETAIL IS NOT APLICABLE WHEN BRACING IS REQUIRED AT 1/3 POINTS OR I-BRACE IS SPECIFIED. ***

APPLY 2x___ SCAB TO ONE FACE OF WEB WITH
2 ROWS OF 10d (0.131" X 3") NAILS SPACED 6" O.C.
SCAB MUST BE THE SAME GRADE, SIZE AND
SPECIES (OR BETTER) AS THE WEB.

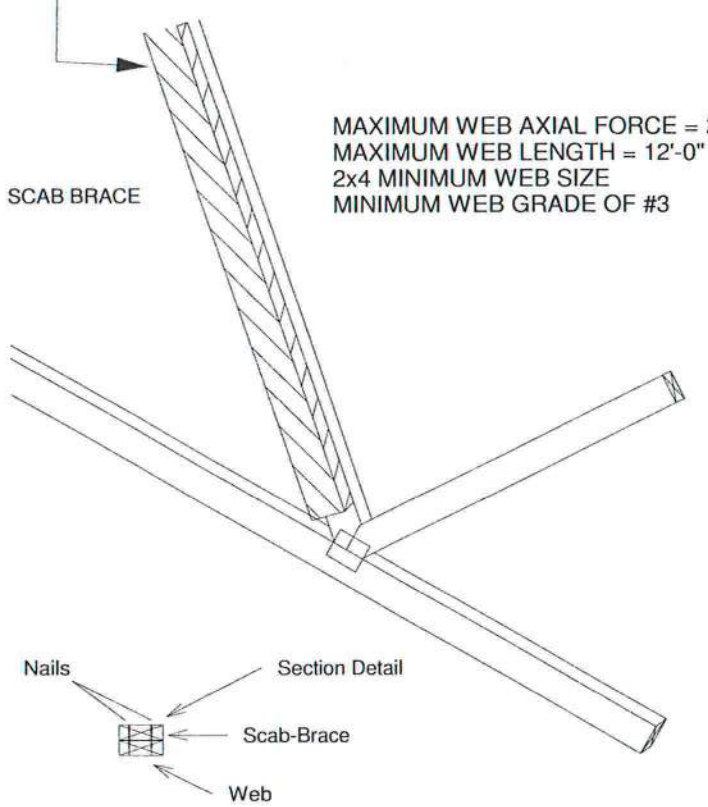

MAXIMUM WEB AXIAL FORCE = 2500 lbs
MAXIMUM WEB LENGTH = 12'-0"
2x4 MINIMUM WEB SIZE
MINIMUM WEB GRADE OF #3

Scab-Brace must be same species grade (or better) as web member.

THOMAS A. ALBANI
LICENSE
No 39380
STATE OF FLORIDA
PROFESSIONAL ENGINEER

Thomas A. Albani PE No.39380
MiTek USA, Inc. FL Cert 6634
6904 Parke East Blvd. Tampa FL 33610
Date:

February 12, 2018

AUGUST 1, 2016	STANDARD REPAIR TO REMOVE END VERTICAL (RIBBON NOTCH VERTICAL)	MII-REP05

MiTek USA, Inc. ENGINEERED BY TRENCO A MiTek Affiliate

1. THIS IS A SPECIFIC REPAIR DETAIL TO BE USED ONLY FOR ITS ORIGINAL INTENTION. THIS REPAIR DOES NOT IMPLY THAT THE REMAINING PORTION OF THE TRUSS IS UNDAMAGED. THE ENTIRE TRUSS SHALL BE INSPECTED TO VERIFY THAT NO FURTHER REPAIRS ARE REQUIRED. WHEN THE REQUIRED REPAIRS ARE PROPERLY APPLIED, THE TRUSS WILL BE CAPABLE OF SUPPORTING THE LOADS INDICATED.
2. ALL MEMBERS MUST BE RETURNED TO THEIR ORIGINAL POSITIONS BEFORE APPLYING REPAIR AND HELD IN PLACE DURING APPLICATION OF REPAIR.
3. THE END DISTANCE, EDGE DISTANCE, AND SPACING OF NAILS SHALL BE SUCH AS TO AVOID SPLITTING OF THE WOOD.
4. LUMBER MUST BE CUT CLEANLY AND ACCURATELY AND THE REMAINING WOOD MUST BE UNDAMAGED.
5. THIS REPAIR IS TO BE USED FOR SINGLE PLY TRUSSES IN THE 4X_ ORIENTATION ONLY.
6. CONNECTOR PLATES MUST BE FULLY IMBEDDED AND UNDISTURBED.

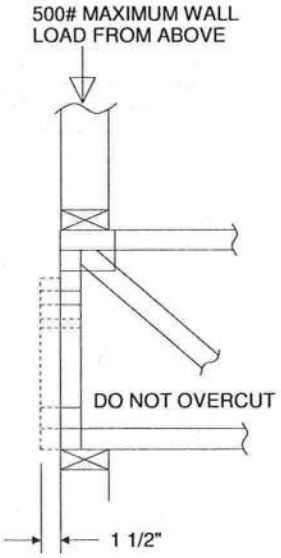

REFER TO INDIVIDUAL TRUSS DESIGN FOR PLATE SIZES AND LUMBER GRADES

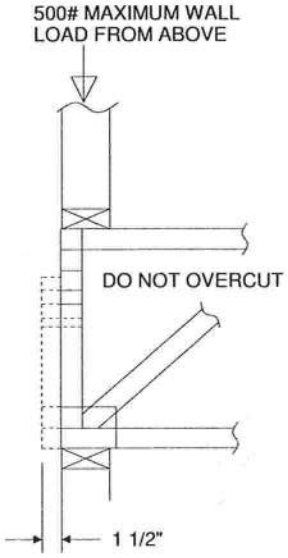

TRUSSES BUILT WITH 4x2 MEMBERS

REFER TO INDIVIDUAL TRUSS DESIGN FOR PLATE SIZES AND LUMBER GRADES

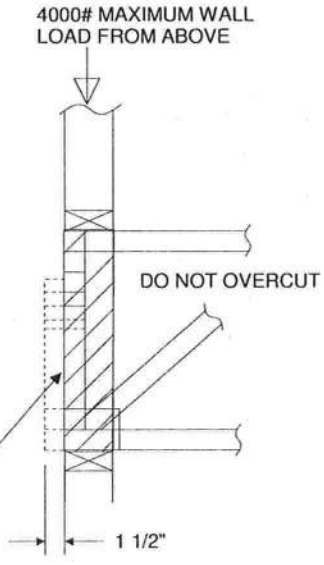

TRUSSES BUILT WITH 4x2 MEMBERS

ATTACH 2x4 SQUASH BLOCK (CUT TO FIT TIGHTLY) TO BOTH SIDES OF THE TRUSS AS SHOWN WITH 10d (0.131" X 3") NAILS SPACED 3" O.C.

THOMAS A. ALBANI LICENSE No 39380 STATE OF FLORIDA PROFESSIONAL ENGINEER

Thomas A. Albani PE No.39380
MiTek USA, Inc. FL Cert 6634
6904 Parke East Blvd. Tampa FL 33610
Date:
February 12, 2018

AUGUST 1, 2016	Standard Gable End Detail	MII-GE130-D-SP

MiTek USA, Inc. ENGINEERED BY TRENCO A MiTek Affiliate

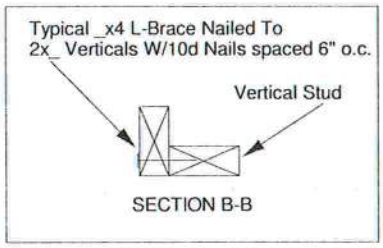

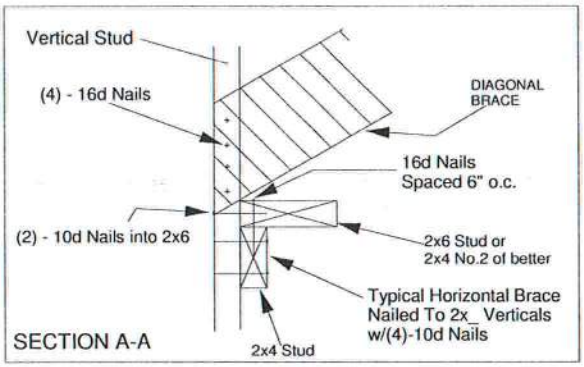

TRUSS GEOMETRY AND CONDITIONS SHOWN ARE FOR ILLUSTRATION ONLY.

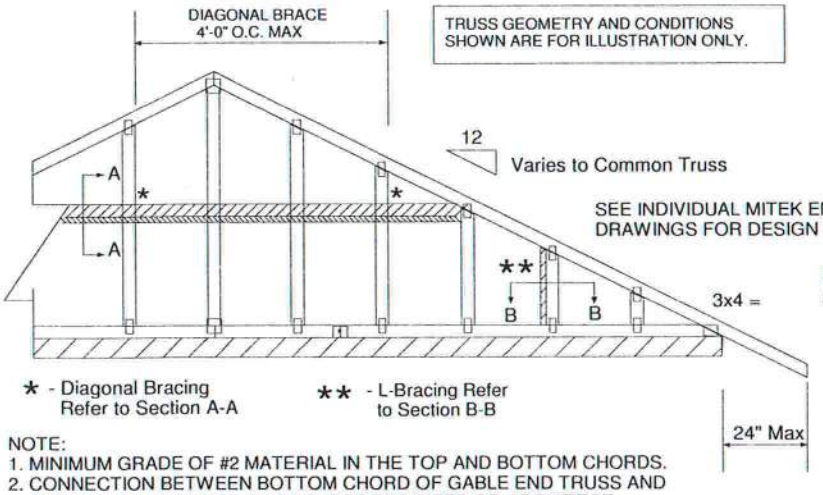

SEE INDIVIDUAL MITEK ENGINEERING DRAWINGS FOR DESIGN CRITERIA

PROVIDE 2x4 BLOCKING BETWEEN THE FIRST TWO TRUSSES AS NOTED. TOENAIL BLOCKING TO TRUSSES WITH (2) - 10d NAILS AT EACH END. ATTACH DIAGONAL BRACE TO BLOCKING WITH (5) - 10d NAILS.

(4) - 8d (0.131" X 2.5") NAILS MINIMUM, PLYWOOD SHEATHING TO 2x4 STD SPF BLOCK

* - Diagonal Bracing Refer to Section A-A

** - L-Bracing Refer to Section B-B

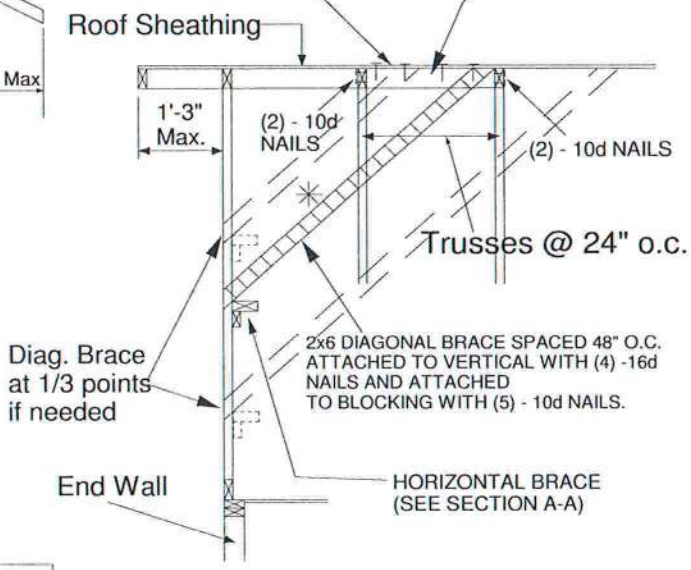

NOTE:
1. MINIMUM GRADE OF #2 MATERIAL IN THE TOP AND BOTTOM CHORDS.
2. CONNECTION BETWEEN BOTTOM CHORD OF GABLE END TRUSS AND WALL TO BE PROVIDED BY PROJECT ENGINEER OR ARCHITECT.
3. BRACING SHOWN IS FOR INDIVIDUAL TRUSS ONLY. CONSULT BLDG. ARCHITECT OR ENGINEER FOR TEMPORARY AND PERMANENT BRACING OF ROOF SYSTEM.
4. "L" BRACES SPECIFIED ARE TO BE FULL LENGTH. GRADES: 1x4 SRB OR 2x4 STUD OR BETTER WITH ONE ROW OF 10d NAILS SPACED 6" O.C.
5. DIAGONAL BRACE TO BE APPROXIMATELY 45 DEGREES TO ROOF DIAPHRAM AT 4'-0" O.C.
6. CONSTRUCT HORIZONTAL BRACE CONNECTING A 2x6 STUD AND A 2x4 STUD AS SHOWN WITH 16d NAILS SPACED 6" O.C. HORIZONTAL BRACE TO BE LOCATED AT THE MIDSPAN OF THE LONGEST STUD. ATTACH TO VERTICAL STUDS WITH (4) 10d NAILS THROUGH 2x4. (REFER TO SECTION A-A)
7. GABLE STUD DEFLECTION MEETS OR EXCEEDS L/240.
8. THIS DETAIL DOES NOT APPLY TO STRUCTURAL GABLES.
9. DO NOT USE FLAT BOTTOM CHORD GABLES NEXT TO SCISSOR TYPE TRUSSES.
10. SOUTHERN PINE LUMBER DESIGN VALUES ARE THOSE EFFECTIVE 06-01-13 BY SPIB/ALSC.
11. NAILS DESIGNATED 10d ARE (0.131" X 3") AND NAILS DESIGNATED 16d ARE (0.131" X 3.5")

Minimum Stud Size Species and Grade	Stud Spacing	Without Brace	1x4 L-Brace	2x4 L-Brace	DIAGONAL BRACE	2 DIAGONAL BRACES AT 1/3 POINTS
		Maximum Stud Length				
2x4 SP No. 3 / Stud	12" O.C.	3-9-13	4-1-1	5-9-6	7-1-3	11-5-7
2x4 SP No. 3 / Stud	16" O.C.	3-5-4	3-6-8	5-0-2	6-10-8	10-3-13
2x4 SP No. 3 / Stud	24" O.C.	2-9-11	2-10-11	4-1-1	5-7-6	8-5-1

✳ Diagonal braces over 6'-3" require a 2x4 T-Brace attached to one edge. Diagonal braces over 12'-6" require 2x4 I-braces attached to both edges. Fasten T and I braces to narrow edge of diagonal brace with 10d nails 8" o.c., with 3" minimum end distance. Brace must cover 90% of diagonal length.

MAX MEAN ROOF HEIGHT = 30 FEET
CATEGORY II BUILDING
EXPOSURE D
ASCE 7-98, ASCE 7-02, ASCE 7-05 130 MPH
ASCE 7-10 160 MPH
DURATION OF LOAD INCREASE : 1.60

STUD DESIGN IS BASED ON COMPONENTS AND CLADDING.
CONNECTION OF BRACING IS BASED ON MWFRS.

THOMAS A. ALBANI LICENSE No 39380 STATE OF FLORIDA PROFESSIONAL ENGINEER

Thomas A. Albani PE No.39380
MiTek USA, Inc. FL Cert 6634
6904 Parke East Blvd. Tampa FL 33610
Date:
February 12, 2018

AUGUST 1, 2016	Standard Gable End Detail	MII-GE130-SP

MiTek USA, Inc.

ENGINEERED BY TRENCO A MiTek Affiliate

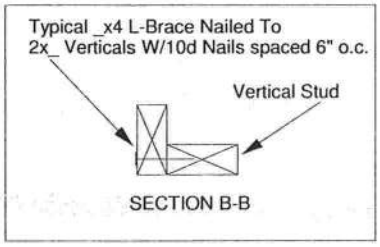

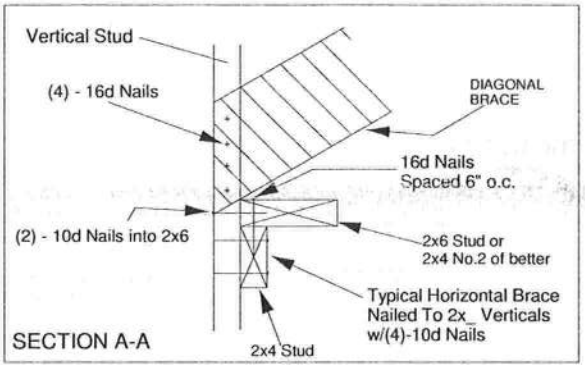

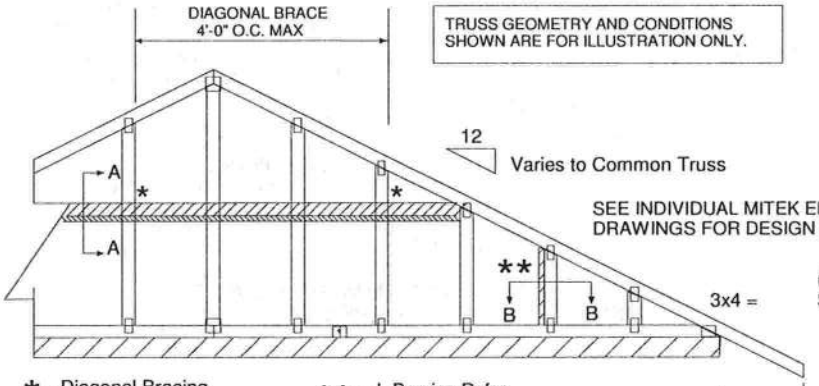

TRUSS GEOMETRY AND CONDITIONS SHOWN ARE FOR ILLUSTRATION ONLY.

SEE INDIVIDUAL MITEK ENGINEERING DRAWINGS FOR DESIGN CRITERIA

PROVIDE 2x4 BLOCKING BETWEEN THE FIRST TWO TRUSSES AS NOTED. TOENAIL BLOCKING TO TRUSSES WITH (2) - 10d NAILS AT EACH END. ATTACH DIAGONAL BRACE TO BLOCKING WITH (5) - 10d NAILS.

(4) - 8d (0.131" X2.5") NAILS MINIMUM, PLYWOOD SHEATHING TO 2x4 STD SPF BLOCK

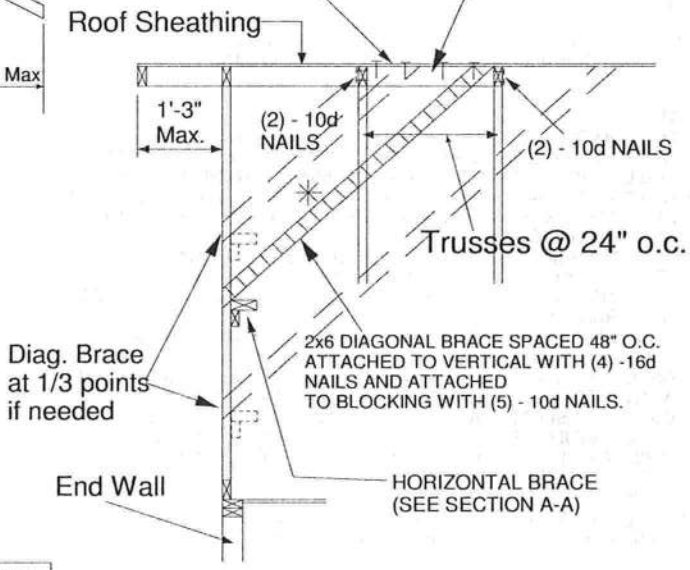

* - Diagonal Bracing Refer to Section A-A

** - L-Bracing Refer to Section B-B

NOTE:
1. MINIMUM GRADE OF #2 MATERIAL IN THE TOP AND BOTTOM CHORDS.
2. CONNECTION BETWEEN BOTTOM CHORD OF GABLE END TRUSS AND WALL TO BE PROVIDED BY PROJECT ENGINEER OR ARCHITECT.
3. BRACING SHOWN IS FOR INDIVIDUAL TRUSS ONLY. CONSULT BLDG. ARCHITECT OR ENGINEER FOR TEMPORARY AND PERMANENT BRACING OF ROOF SYSTEM.
4. "L" BRACES SPECIFIED ARE TO BE FULL LENGTH. GRADES: 1x4 SRB OR 2x4 STUD OR BETTER WITH ONE ROW OF 10d NAILS SPACED 6" O.C.
5. DIAGONAL BRACE TO BE APPROXIMATELY 45 DEGREES TO ROOF DIAPHRAM AT 4'-0" O.C.
6. CONSTRUCT HORIZONTAL BRACE CONNECTING A 2x6 STUD AND A 2x4 STUD AS SHOWN WITH 16d NAILS SPACED 6" O.C. HORIZONTAL BRACE TO BE LOCATED AT THE MIDSPAN OF THE LONGEST STUD. ATTACH TO VERTICAL STUDS WITH (4) 10d NAILS THROUGH 2x4. (REFER TO SECTION A-A)
7. GABLE STUD DEFLECTION MEETS OR EXCEEDS L/240.
8. THIS DETAIL DOES NOT APPLY TO STRUCTURAL GABLES.
9. DO NOT USE FLAT BOTTOM CHORD GABLES NEXT TO SCISSOR TYPE TRUSSES.
10. SOUTHERN PINE LUMBER DESIGN VALUES ARE THOSE EFFECTIVE 06-01-13 BY SPIB/ALSC.
11. NAILS DESIGNATED 10d ARE (0.131" X 3") AND NAILS DESIGNATED 16d ARE (0.131" X 3.5")

Minimum Stud Size Species and Grade	Stud Spacing	Without Brace	1x4 L-Brace	2x4 L-Brace	DIAGONAL BRACE	2 DIAGONAL BRACES AT 1/3 POINTS
		Maximum Stud Length				
2x4 SP No. 3 / Stud	12" O.C.	4-0-7	4-5-6	6-3-8	8-0-15	12-1-6
2x4 SP No. 3 / Stud	16" O.C.	3-8-0	3-10-4	5-5-6	7-4-1	11-0-1
2x4 SP No. 3 / Stud	24" O.C.	3-0-10	3-1-12	4-5-6	6-1-5	9-1-15

✳ Diagonal braces over 6'-3" require a 2x4 T-Brace attached to one edge. Diagonal braces over 12'-6" require 2x4 I-braces attached to both edges. Fasten T and I braces to narrow edge of diagonal brace with 10d nails 8" o.c., with 3" minimum end distance. Brace must cover 90% of diagonal length.

MAX MEAN ROOF HEIGHT = 30 FEET
CATEGORY II BUILDING
EXPOSURE B or C
ASCE 7-98, ASCE 7-02, ASCE 7-05 130 MPH
ASCE 7-10 160 MPH
DURATION OF LOAD INCREASE : 1.60

STUD DESIGN IS BASED ON COMPONENTS AND CLADDING. CONNECTION OF BRACING IS BASED ON MWFRS.

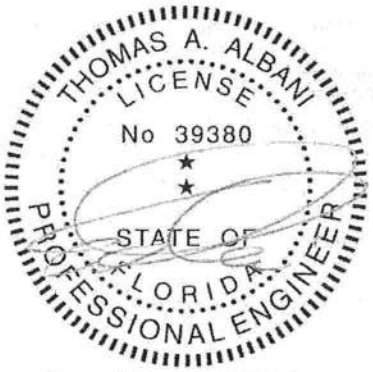

Thomas A. Albani PE No.39380
MiTek USA, Inc. FL Cert 6634
6904 Parke East Blvd. Tampa FL 33610
Date:
February 12, 2018

JANUARY 6, 2017	Standard Gable End Detail	MII-GE140-001

MiTek USA, Inc.

ENGINEERED BY TRENCO A MiTek Affiliate

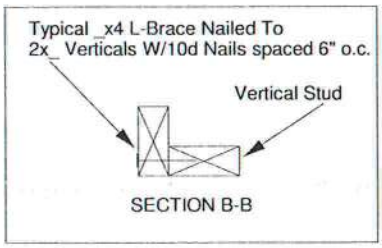

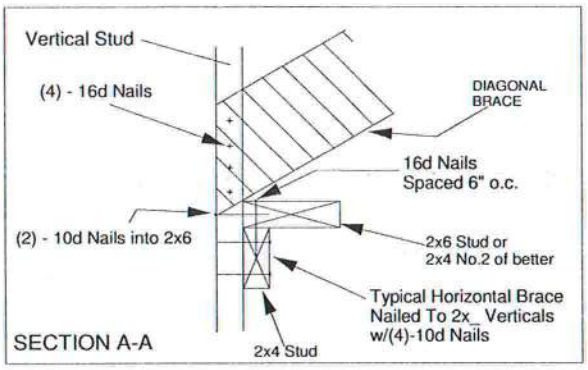

TRUSS GEOMETRY AND CONDITIONS SHOWN ARE FOR ILLUSTRATION ONLY.

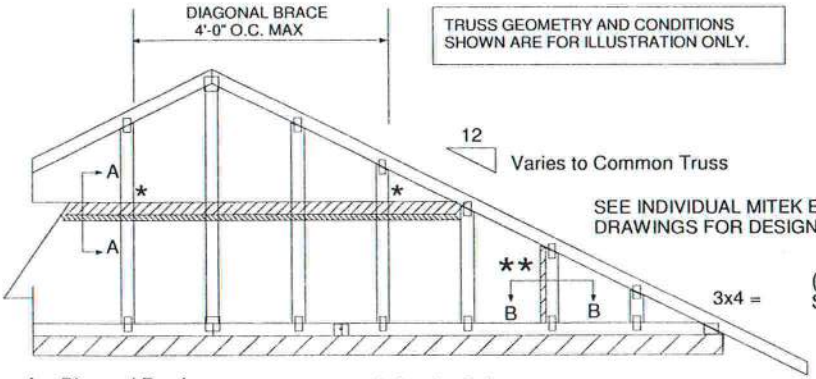

SEE INDIVIDUAL MITEK ENGINEERING DRAWINGS FOR DESIGN CRITERIA

PROVIDE 2x4 BLOCKING BETWEEN THE FIRST TWO TRUSSES AS NOTED. TOENAIL BLOCKING TO TRUSSES WITH (2) - 10d NAILS AT EACH END. ATTACH DIAGONAL BRACE TO BLOCKING WITH (5) - 10d NAILS.

(4) - 8d (0.131" X 2.5") NAILS MINIMUM, PLYWOOD SHEATHING TO 2x4 STD DF/SPF BLOCK

* - Diagonal Bracing Refer to Section A-A

** - L-Bracing Refer to Section B-B

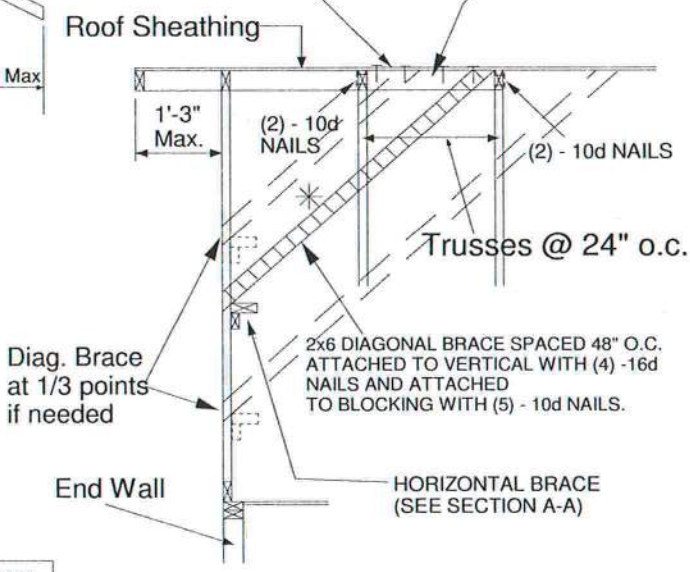

NOTE:
1. MINIMUM GRADE OF #2 MATERIAL IN THE TOP AND BOTTOM CHORDS.
2. CONNECTION BETWEEN BOTTOM CHORD OF GABLE END TRUSS AND WALL TO BE PROVIDED BY PROJECT ENGINEER OR ARCHITECT.
3. BRACING SHOWN IS FOR INDIVIDUAL TRUSS ONLY. CONSULT BLDG. ARCHITECT OR ENGINEER FOR TEMPORARY AND PERMANENT BRACING OF ROOF SYSTEM.
4. "L" BRACES SPECIFIED ARE TO BE FULL LENGTH. GRADES: 1x4 SRB OR 2x4 STUD OR BETTER WITH ONE ROW OF 10d NAILS SPACED 6" O.C.
5. DIAGONAL BRACE TO BE APPROXIMATELY 45 DEGREES TO ROOF DIAPHRAM AT 4'-0" O.C.
6. CONSTRUCT HORIZONTAL BRACE CONNECTING A 2x6 STUD AND A 2x4 STUD AS SHOWN WITH 16d NAILS SPACED 6" O.C. HORIZONTAL BRACE TO BE LOCATED AT THE MIDSPAN OF THE LONGEST STUD. ATTACH TO VERTICAL STUDS WITH (4) 10d NAILS THROUGH 2x4. (REFER TO SECTION A-A)
7. GABLE STUD DEFLECTION MEETS OR EXCEEDS L/240.
8. THIS DETAIL DOES NOT APPLY TO STRUCTURAL GABLES.
9. DO NOT USE FLAT BOTTOM CHORD GABLES NEXT TO SCISSOR TYPE TRUSSES.
10. NAILS DESIGNATED 10d ARE (0.131" X 3") AND NAILS DESIGNATED 16d ARE (0.131" X 3.5")

Minimum Stud Size Species and Grade	Stud Spacing	Without Brace	1x4 L-Brace	2x4 L-Brace	DIAGONAL BRACE	2 DIAGONAL BRACES AT 1/3 POINTS
		Maximum Stud Length				
2x4 DF/SPF Std/Stud	12" O.C.	3-10-1	3-11-7	5-7-2	7-8-2	11-6-4
2x4 DF/SPF Std/Stud	16" O.C.	3-3-14	3-5-1	4-10-2	6-7-13	9-11-11
2x4 DF/SPF Std/Stud	24" O.C.	2-8-9	2-9-8	3-11-7	5-5-2	8-1-12

✳ Diagonal braces over 6'-3" require a 2x4 T-Brace attached to one edge. Diagonal braces over 12'-6" require 2x4 I-braces attached to both edges. Fasten T and I braces to narrow edge of web with 10d nails 8" o.c., with 3" minimum end distance. Brace must cover 90% of diagonal length.

MAXIMUM WIND SPEED = 140 MPH
MAX MEAN ROOF HEIGHT = 30 FEET
CATEGORY II BUILDING
EXPOSURE B or C
ASCE 7-98, ASCE 7-02, ASCE 7-05
DURATION OF LOAD INCREASE : 1.60

STUD DESIGN IS BASED ON COMPONENTS AND CLADDING.
CONNECTION OF BRACING IS BASED ON MWFRS.

Thomas A. Albani PE No.39380
MiTek USA, Inc. FL Cert 6634
6904 Parke East Blvd. Tampa FL 33610
Date:

January 19, 2018

AUGUST 1, 2016	Standard Gable End Detail	MII-GE170-D-SP

MiTek USA, Inc.

MiTek USA, Inc.
ENGINEERED BY TRENCO
A MiTek Affiliate

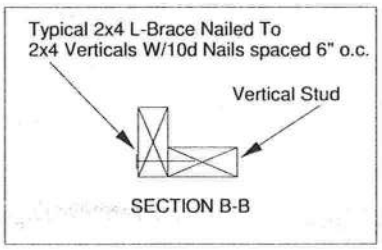

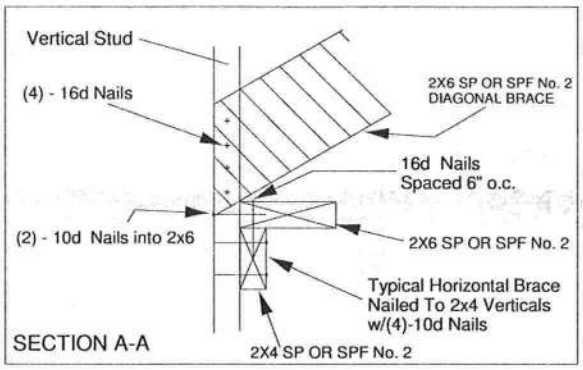

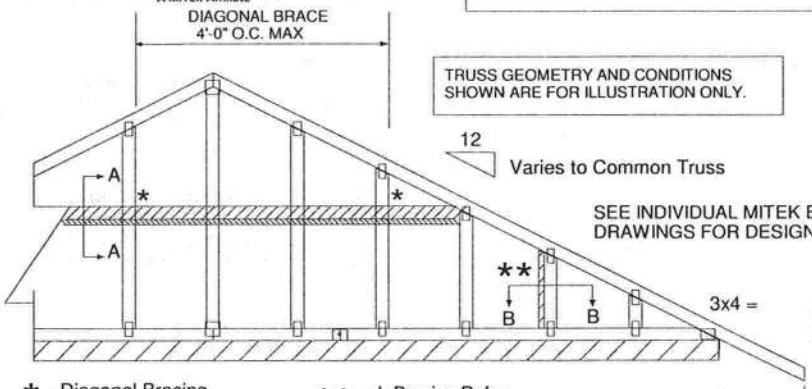

TRUSS GEOMETRY AND CONDITIONS SHOWN ARE FOR ILLUSTRATION ONLY.

12 Varies to Common Truss

SEE INDIVIDUAL MITEK ENGINEERING DRAWINGS FOR DESIGN CRITERIA

PROVIDE 2x4 BLOCKING BETWEEN THE FIRST TWO TRUSSES AS NOTED. TOENAIL BLOCKING TO TRUSSES WITH (2) - 10d NAILS AT EACH END. ATTACH DIAGONAL BRACE TO BLOCKING WITH (5) - 10d NAILS.

(4) - 8d (0.131" X 2.5") NAILS MINIMUM, PLYWOOD SHEATHING TO 2x4 STD SPF BLOCK

* - Diagonal Bracing Refer to Section A-A

** - L-Bracing Refer to Section B-B

24" Max

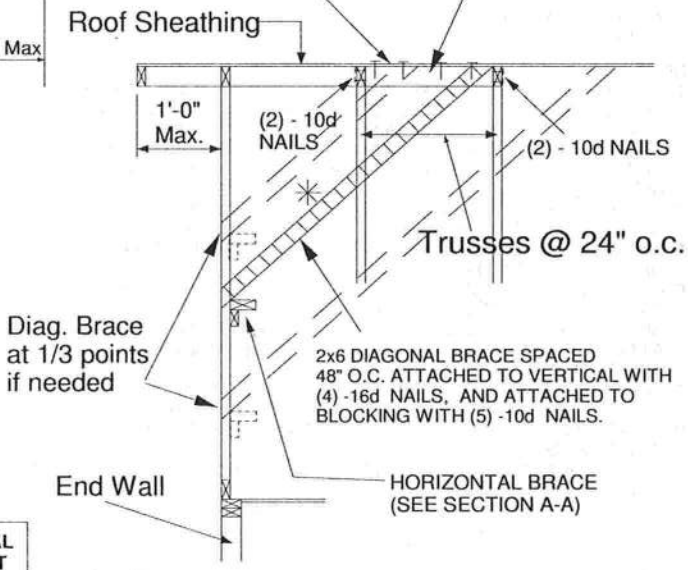

NOTE:
1. MINIMUM GRADE OF #2 MATERIAL IN THE TOP AND BOTTOM CHORDS.
2. CONNECTION BETWEEN BOTTOM CHORD OF GABLE END TRUSS AND WALL TO BE PROVIDED BY PROJECT ENGINEER OR ARCHITECT.
3. BRACING SHOWN IS FOR INDIVIDUAL TRUSS ONLY. CONSULT BLDG. ARCHITECT OR ENGINEER FOR TEMPORARY AND PERMANENT BRACING OF ROOF SYSTEM.
4. "L" BRACES SPECIFIED ARE TO BE FULL LENGTH, SPF or SP No.3 OR BETTER WITH ONE ROW OF 10d NAILS SPACED 6" O.C.
5. DIAGONAL BRACE TO BE APPROXIMATELY 45 DEGREES TO ROOF DIAPHRAM AT 4'-0" O.C.
6. CONSTRUCT HORIZONTAL BRACE CONNECTING A 2x6 AND A 2x4 AS SHOWN WITH 16d NAILS SPACED 6" O.C. HORIZONTAL BRACE TO BE LOCATED AT THE MIDSPAN OF THE LONGEST GABLE STUD. ATTACH TO VERTICAL GABLE STUDS WITH (4) 10d NAILS THROUGH 2x4. (REFER TO SECTION A-A)
7. GABLE STUD DEFLECTION MEETS OR EXCEEDS L/240.
8. THIS DETAIL DOES NOT APPLY TO STRUCTURAL GABLES.
9. DO NOT USE FLAT BOTTOM CHORD GABLES NEXT TO SCISSOR TYPE TRUSSES.
10. SOUTHERN PINE LUMBER DESIGN VALUES ARE THOSE EFFECTIVE 06-01-13 BY SPIB/ALSC.
11. NAILS DESIGNATED 10d ARE (0.131" X 3") AND NAILS DESIGNATED 16d ARE (0.131" X 3.5")

Minimum Stud Size Species and Grade	Stud Spacing	Without Brace	2x4 L-Brace	DIAGONAL BRACE	2 DIAGONAL BRACES AT 1/3 POINTS
		Maximum Stud Length			
2x4 SP No. 3 / Stud	12" O.C.	3-9-7	5-8-8	6-11-1	11-4-4
2x4 SP No. 3 / Stud	16" O.C.	3-4-12	4-11-15	6-9-8	10-2-3
2x4 SP No. 3 / Stud	24" O.C.	2-9-4	4-0-7	5-6-8	8-3-13
2x4 SP No. 2	12" O.C.	3-11-13	5-8-8	6-11-1	11-11-7
2x4 SP No. 2	16" O.C.	3-7-7	4-11-5	6-11-1	10-10-5
2x4 SP No. 2	24" O.C.	3-1-15	4-0-7	6-3-14	9-5-14

✳ Diagonal braces over 6'-3" require a 2x4 T-Brace attached to one edge. Diagonal braces over 12'-6" require 2x4 I-braces attached to both edges. Fasten T and I braces to narrow edge of diagonal brace with 10d nails 6" o.c., with 3" minimum end distance. Brace must cover 90% of diagonal length. T or I braces must be 2x4 SPF No. 2 or SP No. 2.

MAX MEAN ROOF HEIGHT = 30 FEET
EXPOSURE D
ASCE 7-10 170 MPH
DURATION OF LOAD INCREASE : 1.60

STUD DESIGN IS BASED ON COMPONENTS AND CLADDING.
CONNECTION OF BRACING IS BASED ON MWFRS.

Thomas A. Albani PE No.39380
MiTek USA, Inc. FL Cert 6634
6904 Parke East Blvd. Tampa FL 33610
Date:
February 12, 2018

AUGUST 1, 2016	Standard Gable End Detail	MII-GE180-D-SP

MiTek USA, Inc.
ENGINEERED BY TRENCO
A MiTek Affiliate

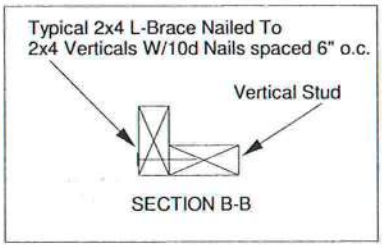

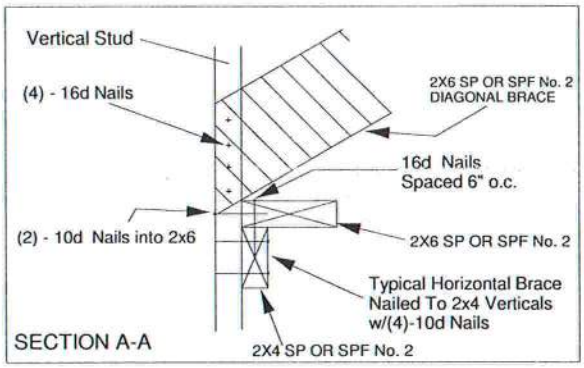

TRUSS GEOMETRY AND CONDITIONS SHOWN ARE FOR ILLUSTRATION ONLY.

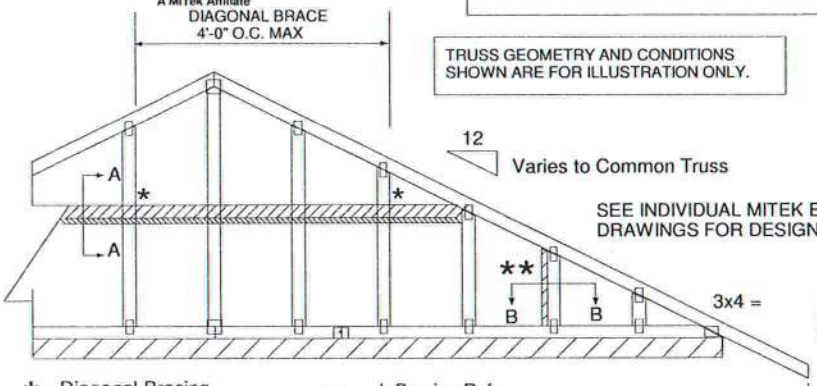

SEE INDIVIDUAL MITEK ENGINEERING DRAWINGS FOR DESIGN CRITERIA

PROVIDE 2x4 BLOCKING BETWEEN THE FIRST TWO TRUSSES AS NOTED. TOENAIL BLOCKING TO TRUSSES WITH (2) - 10d NAILS AT EACH END. ATTACH DIAGONAL BRACE TO BLOCKING WITH (5) - 10d NAILS.

(4) - 8d (0.131" X 2.5") NAILS MINIMUM, PLYWOOD SHEATHING TO 2x4 STD SPF BLOCK

* - Diagonal Bracing Refer to Section A-A

** - L-Bracing Refer to Section B-B

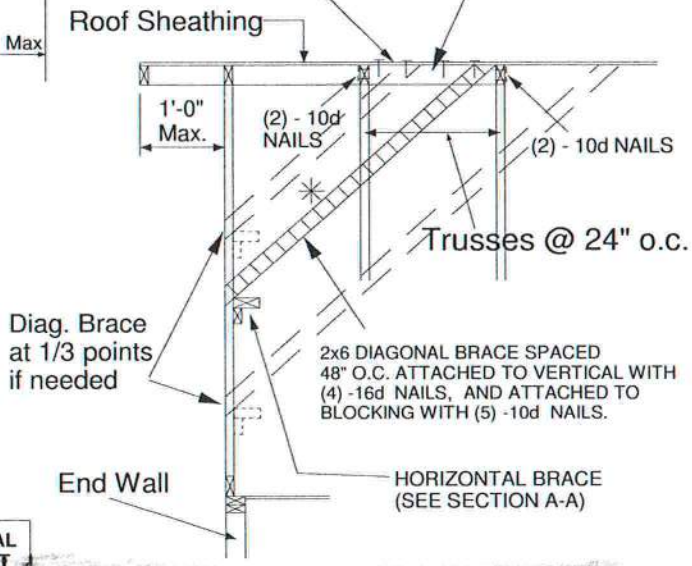

NOTE:
1. MINIMUM GRADE OF #2 MATERIAL IN THE TOP AND BOTTOM CHORDS.
2. CONNECTION BETWEEN BOTTOM CHORD OF GABLE END TRUSS AND WALL TO BE PROVIDED BY PROJECT ENGINEER OR ARCHITECT.
3. BRACING SHOWN IS FOR INDIVIDUAL TRUSS ONLY. CONSULT BLDG. ARCHITECT OR ENGINEER FOR TEMPORARY AND PERMANENT BRACING OF ROOF SYSTEM.
4. "L" BRACES SPECIFIED ARE TO BE FULL LENGTH, SPF or SP No.3 OR BETTER WITH ONE ROW OF 10d NAILS SPACED 6" O.C.
5. DIAGONAL BRACE TO BE APPROXIMATELY 45 DEGREES TO ROOF DIAPHRAM AT 4'-0" O.C.
6. CONSTRUCT HORIZONTAL BRACE CONNECTING A 2x6 AND A 2x4 AS SHOWN WITH 16d NAILS SPACED 6" O.C. HORIZONTAL BRACE TO BE LOCATED AT THE MIDSPAN OF THE LONGEST GABLE STUD. ATTACH TO VERTICAL GABLE STUDS WITH (4) 10d NAILS THROUGH 2x4. (REFER TO SECTION A-A)
7. GABLE STUD DEFLECTION MEETS OR EXCEEDS L/240.
8. THIS DETAIL DOES NOT APPLY TO STRUCTURAL GABLES.
9. DO NOT USE FLAT BOTTOM CHORD GABLES NEXT TO SCISSOR TYPE TRUSSES.
10. SOUTHERN PINE LUMBER DESIGN VALUES ARE THOSE EFFECTIVE 06-01-13 BY SPIB/ALSC.
11. NAILS DESIGNATED 10d ARE (0.131" X 3") AND NAILS DESIGNATED 16d ARE (0.131" X 3.5")

Minimum Stud Size Species and Grade	Stud Spacing	Without Brace	2x4 L-Brace	DIAGONAL BRACE	2 DIAGONAL BRACES AT 1/3 POINTS
		Maximum Stud Length			
2x4 SP No. 3 / Stud	12" O.C.	3-7-12	5-4-11	6-2-1	10-11-3
2x4 SP No. 3 / Stud	16" O.C.	3-2-8	4-8-1	6-2-1	9-7-7
2x4 SP No. 3 / Stud	24" O.C.	2-7-7	3-9-12	5-2-13	7-10-4
2x4 SP No. 2	12" O.C.	3-10-0	5-4-11	6-2-1	11-6-1
2x4 SP No. 2	16" O.C.	3-5-13	4-8-1	6-2-1	10-5-7
2x4 SP No. 2	24" O.C.	3-0-8	3-9-12	6-1-1	9-1-9

✳ Diagonal braces over 6'-3" require a 2x4 T-Brace attached to one edge. Diagonal braces over 12'-6" require 2x4 I-braces attached to both edges. Fasten T and I braces to narrow edge of diagonal brace with 10d nails 6in o.c., with 3in minimum end distance. Brace must cover 90% of diagonal length. T or I braces must be 2x4 SPF No. 2 or SP No. 2.

MAX MEAN ROOF HEIGHT = 30 FEET
EXPOSURE D
ASCE 7-10 180 MPH
DURATION OF LOAD INCREASE : 1.60

STUD DESIGN IS BASED ON COMPONENTS AND CLADDING.
CONNECTION OF BRACING IS BASED ON MWFRS.

THOMAS A. ALBANI
LICENSE
No 39380
STATE OF FLORIDA
PROFESSIONAL ENGINEER

Thomas A. Albani PE No.39380
MiTek USA, Inc. FL Cert 6634
6904 Parke East Blvd. Tampa FL 33610
Date:
February 12, 2018

AUGUST 1, 2016	STANDARD PIGGYBACK TRUSS CONNECTION DETAIL	MII-PIGGY-7-10

MiTek USA, Inc.

ENGINEERED BY TRENCO A MiTek Affiliate

MAXIMUM WIND SPEED = REFER TO NOTES D AND OR E
MAX MEAN ROOF HEIGHT = 30 FEET
MAX TRUSS SPACING = 24 " O.C.
CATEGORY II BUILDING
EXPOSURE B or C
ASCE 7-10
DURATION OF LOAD INCREASE : 1.60

DETAIL IS NOT APPLICABLE FOR TRUSSES TRANSFERING DRAG LOADS (SHEAR TRUSSES). ADDITIONAL CONSIDERATIONS BY BUILDING ENGINEER/DESIGNER ARE REQUIRED.

A - PIGGBACK TRUSS, REFER TO MITEK TRUSS DESIGN DRAWING. SHALL BE CONNECTED TO EACH PURLIN WITH (2) (0.131" X 3.5") TOE-NAILED.
B - BASE TRUSS, REFER TO MITEK TRUSS DESIGN DRAWING.
C - PURLINS AT EACH BASE TRUSS JOINT AND A MAXIMUM 24" O.C. UNLESS SPECIFIED CLOSER ON MITEK TRUSS DESIGN DRAWING. CONNECT TO BASE TRUSS WITH (2) (0.131" X 3.5") NAILS EACH.
D - 2 X __ X 4'-0" SCAB, SIZE TO MATCH TOP CHORD OF PIGGYBACK TRUSS, MIN GRADE #2, ATTACHED TO ONE FACE, CENTERED ON INTERSECTION, WITH (2) ROWS OF (0.131" X 3") NAILS @ 4" O.C. SCAB MAY BE OMITTED PROVIDED THE TOP CHORD SHEATHING IS CONTINUOUS OVER INTERSECTION AT LEAST 1 FT. IN BOTH DIRECTIONS AND:
1. WIND SPEED OF 115 MPH OR LESS FOR ANY PIGGYBACK SPAN, OR
2. WIND SPEED OF 116 MPH TO 160 MPH WITH A MAXIMUM PIGGYBACK SPAN OF 12 ft.
E - FOR WIND SPEEDS BETWEEN 126 AND 160 MPH, ATTACH MITEK 3X8 20 GA Nail-On PLATES TO EACH FACE OF TRUSSES AT 72" O.C. W/ (4) (0.131" X 1.5") NAILS PER MEMBER. STAGGER NAILS FROM OPPOSING FACES. ENSURE 0.5" EDGE DISTANCE. (MIN. 2 PAIRS OF PLATES REQ. REGARDLESS OF SPAN)

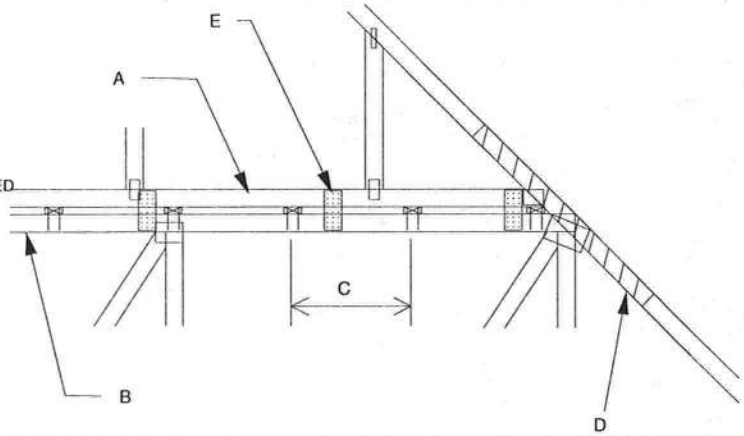

WHEN NO GAP BETWEEN PIGGYBACK AND BASE TRUSS EXISTS:

REPLACE TOE NAILING OF PIGGYBACK TRUSS TO PURLINS WITH Nail-On PLATES AS SHOWN, AND INSTALL PURLINS TO BOTTOM EDGE OF BASE TRUSS TOP CHORD AT SPECIFIED SPACING SHOWN ON BASE TRUSS MITEK DESIGN DRAWING.

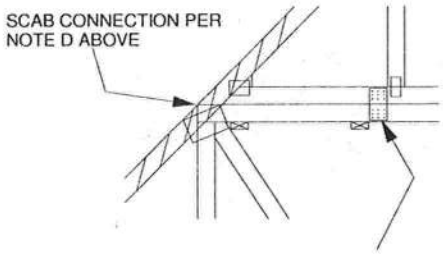

FOR ALL WIND SPEEDS, ATTACH MITEK 3X6 20 GA Nail-On PLATES TO EACH FACE OF TRUSSES AT 48" O.C. W/ (4) (0.131" X 1.5") PER MEMBER. STAGGER NAILS FROM OPPOSING FACES ENSURE 0.5" EDGE DISTANCE.

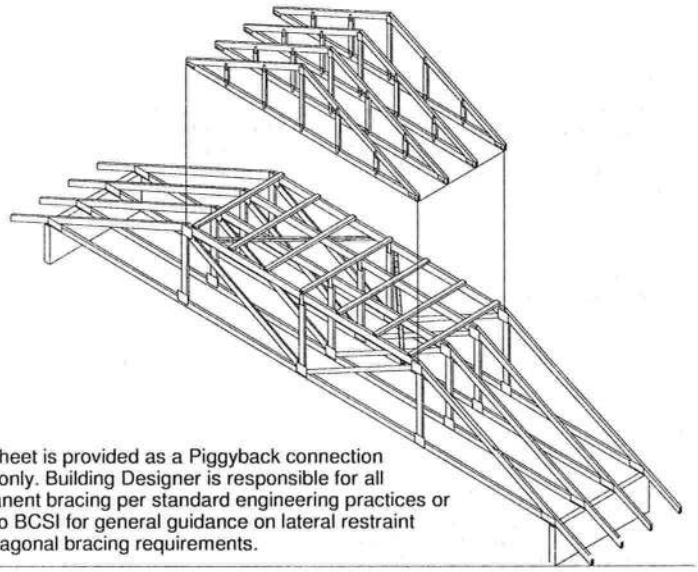

This sheet is provided as a Piggyback connection detail only. Building Designer is responsible for all permanent bracing per standard engineering practices or refer to BCSI for general guidance on lateral restraint and diagonal bracing requirements.

VERTICAL WEB TO EXTEND THROUGH BOTTOM CHORD OF PIGGYBACK

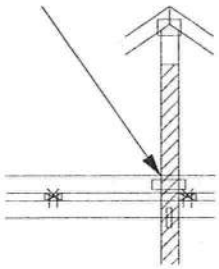

FOR LARGE CONCENTRATED LOADS APPLIED TO CAP TRUSS REQUIRING A VERTICAL WEB:

1) VERTICAL WEBS OF PIGGYBACK AND BASE TRUSS MUST MATCH IN SIZE, GRADE, AND MUST LINE UP AS SHOWN IN DETAIL.
2) ATTACH 2 x ___ x 4'-0" SCAB TO EACH FACE OF TRUSS ASSEMBLY WITH 2 ROWS OF 10d (0.131" X 3") NAILS SPACED 4" O.C. FROM EACH FACE. (SIZE AND GRADE TO MATCH VERTICAL WEBS OF PIGGYBACK AND BASE TRUSS.) (MINIMUM 2X4)
3) THIS CONNECTION IS ONLY VALID FOR A MAXIMUM CONCENTRATED LOAD OF 4000 LBS (@1.15). REVIEW BY A QUALIFIED ENGINEER IS REQUIRED FOR LOADS GREATER THAN 4000 LBS.
4) FOR PIGGYBACK TRUSSES CARRYING GIRDER LOADS, NUMBER OF PLYS OF PIGGYBACK TRUSS TO MATCH BASE TRUSS.
5) CONCENTRATED LOAD MUST BE APPLIED TO BOTH THE PIGGYBACK AND THE BASE TRUSS DESIGN.

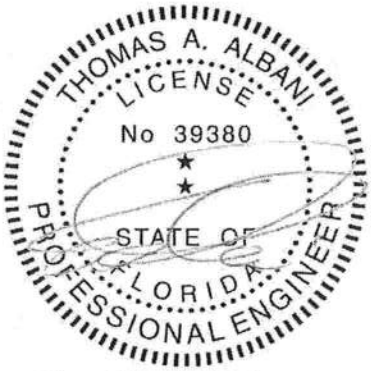

Thomas A. Albani PE No.39380
MiTek USA, Inc. FL Cert 6634
6904 Parke East Blvd. Tampa FL 33610
Date:
February 12, 2018

AUGUST 1, 2016	STANDARD PIGGYBACK TRUSS CONNECTION DETAIL	MII-PIGGY-ALT 7-10

MiTek USA, Inc.

ENGINEERED BY TRENCO A MiTek Affiliate

MAXIMUM WIND SPEED = REFER TO NOTES D AND OR E
MAX MEAN ROOF HEIGHT = 30 FEET
MAX TRUSS SPACING = 24 " O.C.
CATEGORY II BUILDING
EXPOSURE B or C
ASCE 7-10
DURATION OF LOAD INCREASE : 1.60

DETAIL IS NOT APPLICABLE FOR TRUSSES TRANSFERING DRAG LOADS (SHEAR TRUSSES). ADDITIONAL CONSIDERATIONS BY BUILDING ENGINEER/DESIGNER ARE REQUIRED.

A - PIGGBACK TRUSS, REFER TO MITEK TRUSS DESIGN DRAWING. SHALL BE CONNECTED TO EACH PURLIN WITH (2) 0(0.131" X 3.5") TOE-NAILED.
B - BASE TRUSS, REFER TO MITEK TRUSS DESIGN DRAWING.
C - PURLINS AT EACH BASE TRUSS JOINT AND A MAXIMUM 24" O.C. UNLESS SPECIFIED CLOSER ON MITEK TRUSS DESIGN DRAWING. CONNECT TO BASE TRUSS WITH (2) (0.131" X 3.5") NAILS EACH.
D - 2 X __ X 4'-0" SCAB, SIZE TO MATCH TOP CHORD OF PIGGYBACK TRUSS, MIN GRADE #2, ATTACHED TO ONE FACE, CENTERED ON INTERSECTION, WITH (2) ROWS OF (0.131" X 3") NAILS @ 4" O.C. SCAB MAY BE OMITTED PROVIDED THE TOP CHORD SHEATHING IS CONTINUOUS OVER INTERSECTION AT LEAST 1 FT. IN BOTH DIRECTIONS AND:
1. WIND SPEED OF 115 MPH OR LESS FOR ANY PIGGYBACK SPAN, OR
2. WIND SPEED OF 116 MPH TO 160 MPH WITH A MAXIMUM PIGGYBACK SPAN OF 12 ft.
E - FOR WIND SPEED IN THE RANGE 126 MPH - 160 MPH ADD 9" x 9" x 1/2" PLYWOOD (or 7/16" OSB) GUSSET EACH SIDE AT 48" O.C. OR LESS. ATTACH WITH 3 - 6d (0.113" X 2") NAILS INTO EACH CHORD FROM EACH SIDE (TOTAL - 12 NAILS)

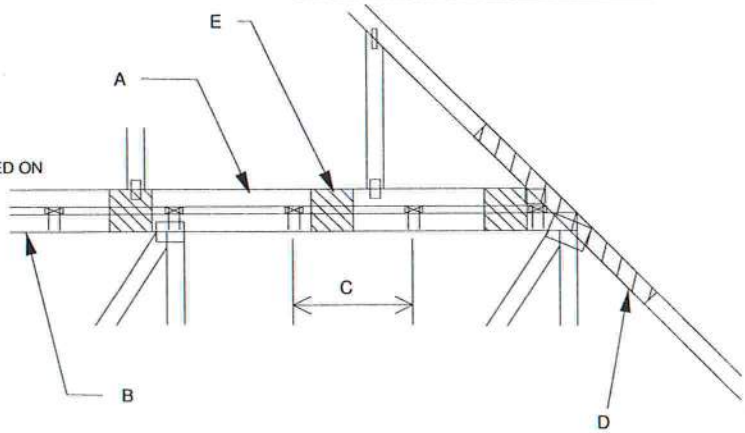

WHEN NO GAP BETWEEN PIGGYBACK AND BASE TRUSS EXISTS:

REPLACE TOE NAILING OF PIGGYBACK TRUSS TO PURLINS WITH PLYWOOD GUSSETS AS SHOWN, AND INSTALL PURLINS TO BOTTOM EDGE OF BASE TRUSS TOP CHORD AT SPECIFIED SPACING SHOWN ON BASE TRUSS MITEK DESIGN DRAWING.

SCAB CONNECTION PER NOTE D ABOVE

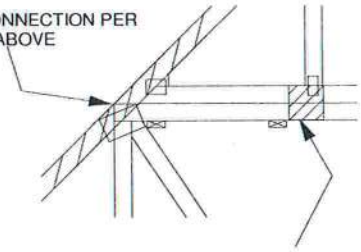

7" x 7" x 1/2" PLYWOOD (or 7/16" OSB) GUSSET EACH SIDE AT 24" O.C. ATTACH WITH 3 - 6d (0.113" X 2") NAILS INTO EACH CHORD FROM EACH SIDE (TOTAL - 12 NAILS)

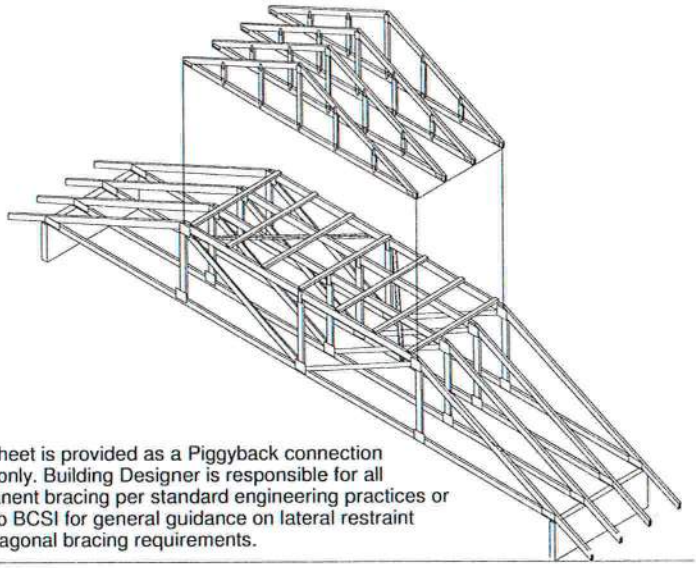

This sheet is provided as a Piggyback connection detail only. Building Designer is responsible for all permanent bracing per standard engineering practices or refer to BCSI for general guidance on lateral restraint and diagonal bracing requirements.

VERTICAL WEB TO EXTEND THROUGH BOTTOM CHORD OF PIGGYBACK

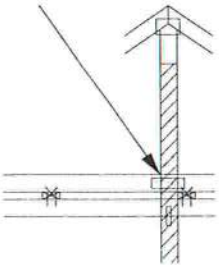

FOR LARGE CONCENTRATED LOADS APPLIED TO CAP TRUSS REQUIRING A VERTICAL WEB:

1) VERTICAL WEBS OF PIGGYBACK AND BASE TRUSS MUST MATCH IN SIZE, GRADE, AND MUST LINE UP AS SHOWN IN DETAIL.
2) ATTACH 2 x ___ x 4'-0" SCAB TO EACH FACE OF TRUSS ASSEMBLY WITH 2 ROWS OF 10d (0.131" X 3") NAILS SPACED 4" O.C. FROM EACH FACE. (SIZE AND GRADE TO MATCH VERTICAL WEBS OF PIGGYBACK AND BASE TRUSS.) (MINIMUM 2X4)
3) THIS CONNECTION IS ONLY VALID FOR A MAXIMUM CONCENTRATED LOAD OF 4000 LBS (@1.15). REVIEW BY A QUALIFIED ENGINEER IS REQUIRED FOR LOADS GREATER THAN 4000 LBS.
4) FOR PIGGYBACK TRUSSES CARRYING GIRDER LOADS, NUMBER OF PLYS OF PIGGYBACK TRUSS TO MATCH BASE TRUSS.
5) CONCENTRATED LOAD MUST BE APPLIED TO BOTH THE PIGGYBACK AND THE BASE TRUSS DESIGN.

THOMAS A. ALBANI
LICENSE
No 39380
STATE OF FLORIDA
PROFESSIONAL ENGINEER

Thomas A. Albani PE No.39380
MiTek USA, Inc. FL Cert 6634
6904 Parke East Blvd. Tampa FL 33610
Date:

January 19, 2018

AUGUST 1, 2016	STANDARD REPAIR DETAIL FOR BROKEN CHORDS, WEBS AND DAMAGED OR MISSING CHORD SPLICE PLATES	MII-REP01A1

MiTek USA, Inc.
ENGINEERED BY TRENCO
A MiTek Affiliate

TOTAL NUMBER OF NAILS EACH SIDE OF BREAK *		X INCHES	MAXIMUM FORCE (lbs) 15% LOAD DURATION							
			SP		DF		SPF		HF	
2x4	2x6		2x4	2x6	2x4	2x6	2x4	2x6	2x4	2x6
20	30	24"	1706	2559	1561	2342	1320	1980	1352	2028
26	39	30"	2194	3291	2007	3011	1697	2546	1738	2608
32	48	36"	2681	4022	2454	3681	2074	3111	2125	3187
38	57	42"	3169	4754	2900	4350	2451	3677	2511	3767
44	66	48"	3657	5485	3346	5019	2829	4243	2898	4347

* DIVIDE EQUALLY FRONT AND BACK

ATTACH 2x_ SCAB OF THE SAME SIZE AND GRADE AS THE BROKEN MEMBER TO EACH FACE OF THE TRUSS (CENTER ON BREAK OR SPLICE) WITH 10d (0.131" X 3") NAILS (TWO ROWS FOR 2x4, THREE ROWS FOR 2x6) SPACED 4" O.C. AS SHOWN. STAGGER NAIL SPACING FROM FRONT FACE AND BACK FACE FOR A NET 0-2-0 O.C. SPACING IN THE MAIN MEMBER. USE A MIN. 0-3-0 MEMBER END DISTANCE.

THE LENGTH OF THE BREAK (C) SHALL NOT EXCEED 12". (C=PLATE LENGTH FOR SPLICE REPAIRS)
THE MINIMUM OVERALL SCAB LENGTH REQUIRED (L) IS CALCULATED AS FOLLOWS:
L = (2) X + C

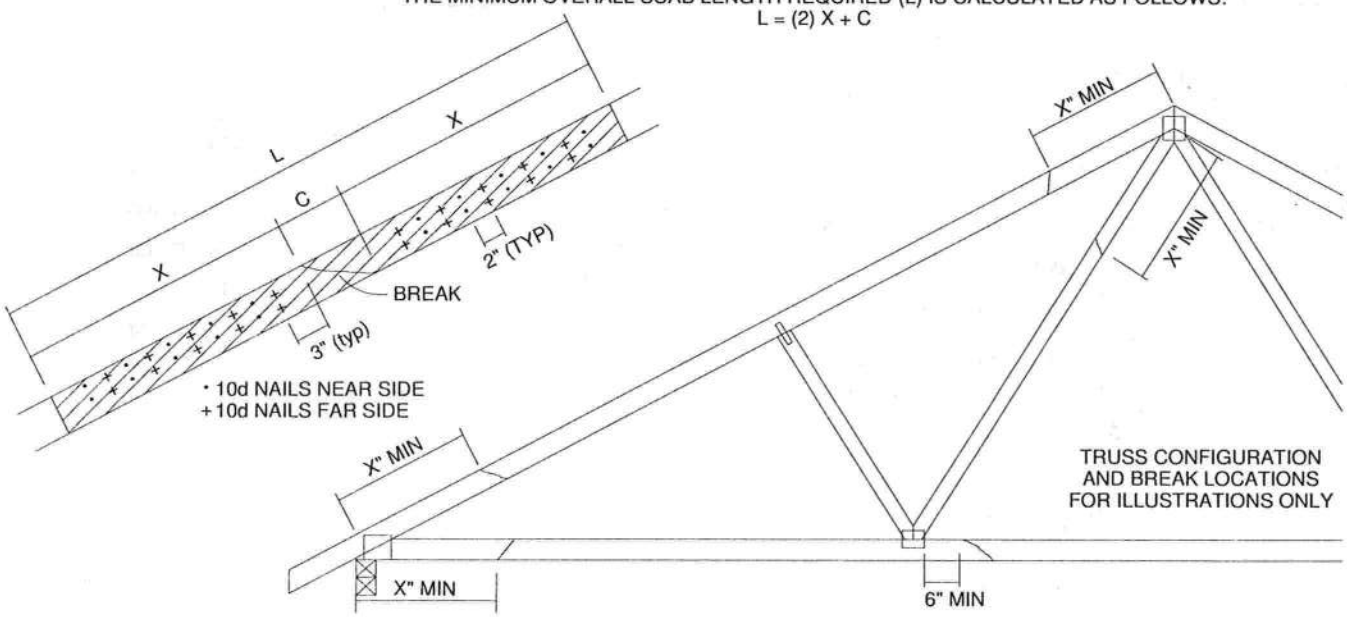

THE LOCATION OF THE BREAK MUST BE GREATER THAN OR EQUAL TO THE REQUIRED X DIMENSION FROM ANY PERIMETER BREAK OR HEEL JOINT AND A MINIMUM OF 6" FROM ANY INTERIOR JOINT (SEE SKETCH ABOVE)

DO NOT USE REPAIR FOR JOINT SPLICES

NOTES:
1. THIS REPAIR DETAIL IS TO BE USED ONLY FOR THE APPLICATION SHOWN. THIS REPAIR DOES NOT IMPLY THAT THE REMAINING PORTION OF THE TRUSS IS UNDAMAGED. THE ENTIRE TRUSS SHALL BE INSPECTED TO VERIFY THAT NO FURTHER REPAIRS ARE REQUIRED. WHEN THE REQUIRED REPAIRS ARE PROPERLY APPLIED, THE TRUSS WILL BE CAPABLE OF SUPPORTING THE LOADS INDICATED.
2. ALL MEMBERS MUST BE RETURNED TO THEIR ORIGINAL POSITIONS BEFORE APPLING REPAIR AND HELD IN PLACE DURING APPLICATION OF REPAIR.
3. THE END DISTANCE, EDGE DISTANCE AND SPACING OF NAILS SHALL BE SUCH AS TO AVOID UNUSUAL SPLITTING OF THE WOOD.
4. WHEN NAILING THE SCABS, THE USE OF A BACKUP WEIGHT IS RECOMMENDED TO AVOID LOOSENING OF THE CONNECTOR PLATES AT THE JOINTS OR SPLICES.
5. THIS REPAIR IS TO BE USED FOR SINGLE PLY TRUSSES IN THE 2x_ ORIENTATION ONLY.
6. THIS REPAIR IS LIMITED TO TRUSSES WITH NO MORE THAN THREE BROKEN MEMBERS.

THOMAS A. ALBANI
LICENSE
No 39380
STATE OF FLORIDA
PROFESSIONAL ENGINEER

Thomas A. Albani PE No.39380
MiTek USA, Inc. FL Cert 6634
6904 Parke East Blvd. Tampa FL 33610
Date:

January 19, 2018

AUGUST 1, 2016	LATERAL TOE-NAIL DETAIL	MII-TOENAIL_SP

MiTek USA, Inc.

ENGINEERED BY TRENCO A MiTek Affiliate

NOTES:
1. TOE-NAILS SHALL BE DRIVEN AT AN ANGLE OF 45 DEGREES WITH THE MEMBER AND MUST HAVE FULL WOOD SUPPORT. (NAIL MUST BE DRIVEN THROUGH AND EXIT AT THE BACK CORNER OF THE MEMBER END AS SHOWN.
2. THE END DISTANCE, EDGE DISTANCE, AND SPACING OF NAILS SHALL BE SUCH AS TO AVOID UNUSUAL SPLITTING OF THE WOOD.
3. ALLOWABLE VALUE SHALL BE THE LESSER VALUE OF THE TWO SPECIES FOR MEMBERS OF DIFFERENT SPECIES.

THIS DETAIL APPLICABLE TO THE THREE END DETAILS SHOWN BELOW

VIEWS SHOWN ARE FOR ILLUSTRATION PURPOSES ONLY

TOE-NAIL SINGLE SHEAR VALUES PER NDS 2001 (lb/nail)

	DIAM.	SP	DF	HF	SPF	SPF-S
3.5" LONG	.131	88.0	80.6	69.9	68.4	59.7
	.135	93.5	85.6	74.2	72.6	63.4
	.162	108.8	99.6	86.4	84.5	73.8
3.25" LONG	.128	74.2	67.9	58.9	57.6	50.3
	.131	75.9	69.5	60.3	59.0	51.1
	.148	81.4	74.5	64.6	63.2	52.5

VALUES SHOWN ARE CAPACITY PER TOE-NAIL.
APPLICABLE DURATION OF LOAD INCREASES MAY BE APPLIED.

EXAMPLE:
(3) - 16d (0.162" X 3.5") NAILS WITH SPF SPECIES BOTTOM CHORD

For load duration increase of 1.15:
3 (nails) X 84.5 (lb/nail) X 1.15 (DOL) = 291.5 lb Maximum Capacity

SIDE VIEW
(2x3)
2 NAILS

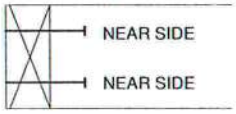

SIDE VIEW
(2x4)
3 NAILS

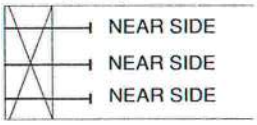

SIDE VIEW
(2x6)
4 NAILS

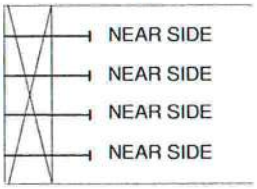

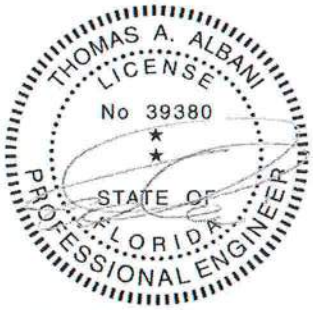

Thomas A. Albani PE No.39380
MiTek USA, Inc. FL Cert 6634
6904 Parke East Blvd. Tampa FL 33610
Date:
January 19, 2018

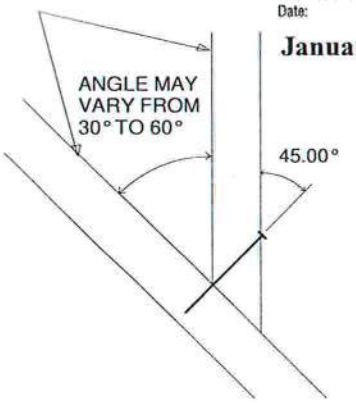

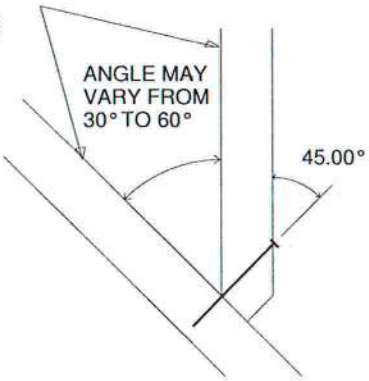

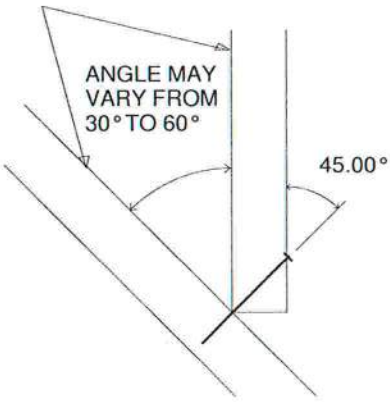

AUGUST 1, 2016	TRUSSED VALLEY SET DETAIL	MII-VALLEY HIGH WIND1

MiTek USA, Inc.

MiTek USA, Inc.

ENGINEERED BY TRENCO A MiTek Affiliate

GENERAL SPECIFICATIONS

1. NAIL SIZE 10d (0.131" X 3")
2. WOOD SCREW = 3" WS3 USP OR EQUIVALENT
   DO NOT USE DRYWALL OR DECKING TYPE SCREW
3. INSTALL VALLEY TRUSSES (24" O.C. MAXIMUM) AND
   SECURE PER DETAIL A
4. BRACE VALLEY WEBS IN ACCORDANCE WITH THE
   INDIVIDUAL DESIGN DRAWINGS.
5. BASE TRUSS SHALL BE DESIGNED WITH A PURLIN SPACING
   EQUILIVANT TO THE RAKE DIMENSION OF THE VALLEY TRUSS SPACING.
6. NAILING DONE PER NDS - 01
7. VALLEY STUD SPACING NOT TO EXCEED 48" O.C.

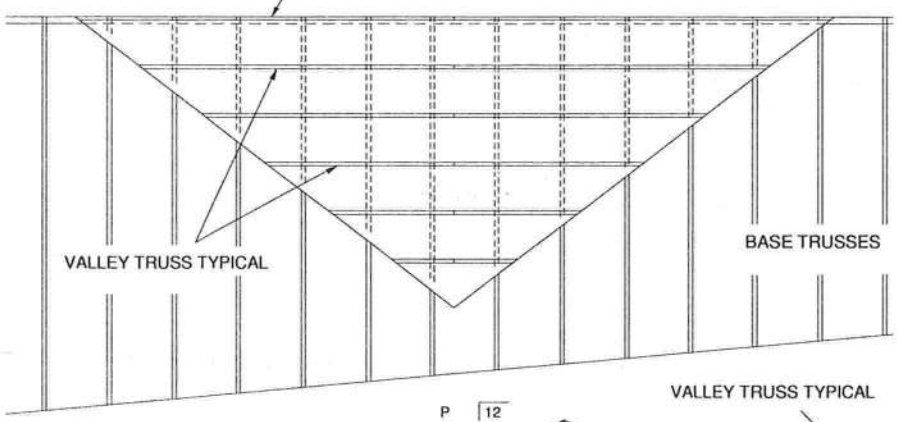

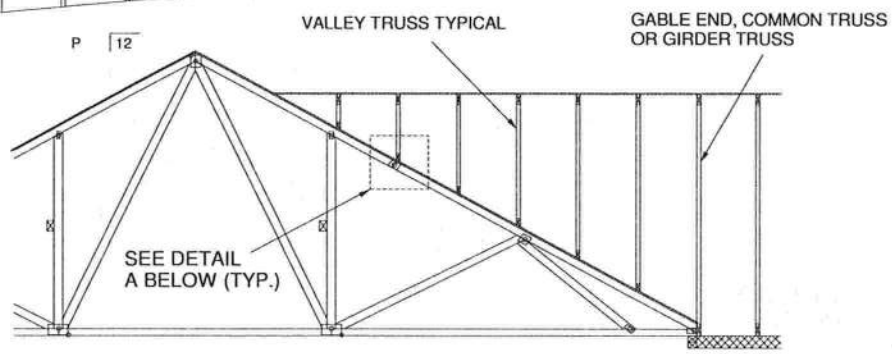

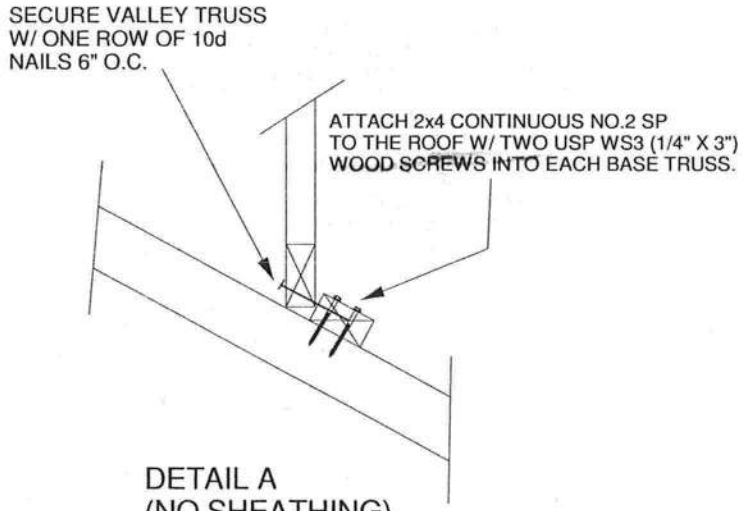

DETAIL A
(NO SHEATHING)
N.T.S.

WIND DESIGN PER ASCE 7-98, ASCE 7-02, ASCE 7-05 146 MPH
WIND DESIGN PER ASCE 7-10 160 MPH
MAX MEAN ROOF HEIGHT = 30 FEET
ROOF PITCH = MINIMUM 3/12 MAXIMUM 6/12
CATEGORY II BUILDING
EXPOSURE C
WIND DURATION OF LOAD INCREASE : 1.60
MAX TOP CHORD TOTAL LOAD = 50 PSF
MAX SPACING = 24" O.C. (BASE AND VALLEY)
MINIMUM REDUCED DEAD LOAD OF 6 PSF
ON THE TRUSSES

THOMAS A. ALBANI
LICENSE
No 39380
STATE OF FLORIDA
PROFESSIONAL ENGINEER

Thomas A. Albani PE No.39380
MiTek USA, Inc. FL Cert 6634
6904 Parke East Blvd. Tampa FL 33610
Date:

January 19, 2018

AUGUST 1, 2016	TRUSSED VALLEY SET DETAIL	MII-VALLEY HIGH WIND2

MiTek USA, Inc.

MiTek USA, Inc.
ENGINEERED BY TRENCO
A MiTek Affiliate

GENERAL SPECIFICATIONS

1. NAIL SIZE 10d (0.131" X 3")
2. WOOD SCREW = 4.5" WS45 USP OR EQUILIVANT
3. INSTALL SHEATHING TO TOP CHORD OF BASE TRUSSES.
4. INSTALL VALLEY TRUSSES (24" O.C. MAXIMUM) AND SECURE TO BASE TRUSSES AS PER DETAIL A
5. BRACE VALLEY WEBS IN ACCORDANCE WITH THE INDIVIDUAL DESIGN DRAWINGS.
6. NAILING DONE PER NDS-01
7. VALLEY STUD SPACING NOT TO EXCEED 48" O.C.

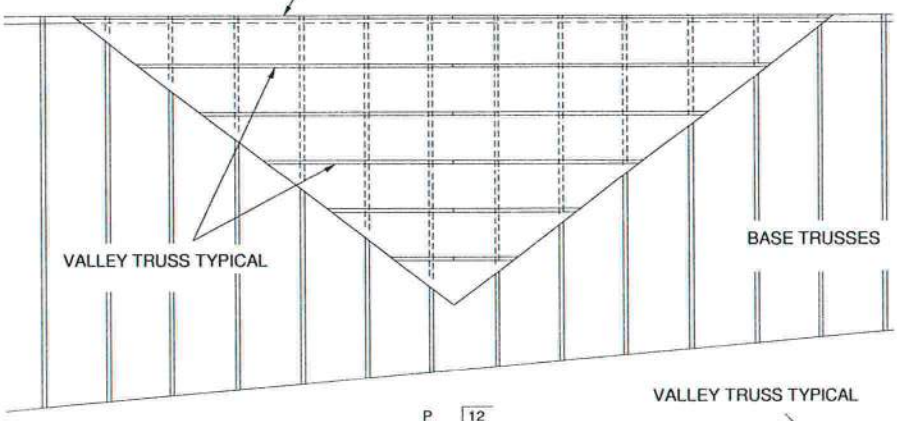

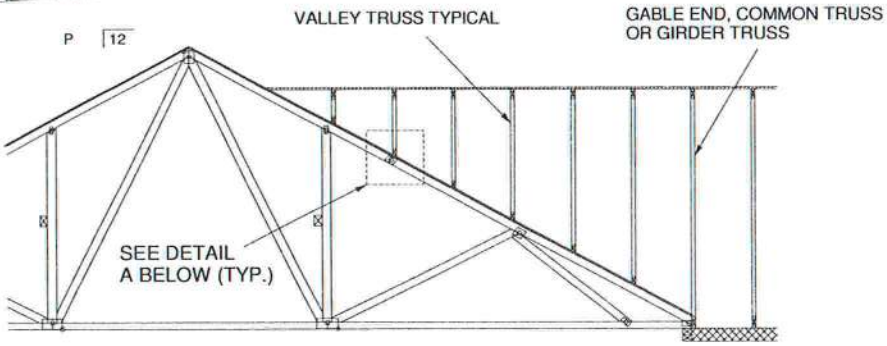

SECURE VALLEY TRUSS
W/ ONE ROW OF 10d
NAILS 6" O.C.

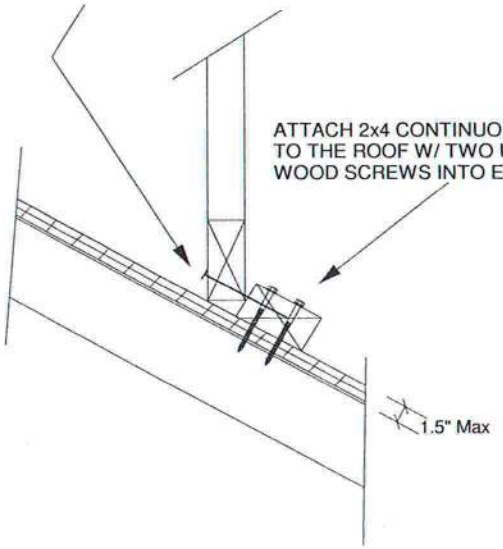

WIND DESIGN PER ASCE 7-98, ASCE 7-02, ASCE 7-05 146 MPH
WIND DESIGN PER ASCE 7-10 160 MPH
MAX MEAN ROOF HEIGHT = 30 FEET
ROOF PITCH = MINIMUM 3/12 MAXIMUM 6/12
CATEGORY II BUILDING
EXPOSURE C
WIND DURATION OF LOAD INCREASE : 1.60
MAX TOP CHORD TOTAL LOAD = 50 PSF
MAX SPACING = 24" O.C. (BASE AND VALLEY)
MINIMUM REDUCED DEAD LOAD OF 6 PSF
ON THE TRUSSES

THOMAS A. ALBANI
LICENSE
No 39380
STATE OF
FLORIDA
PROFESSIONAL ENGINEER

Thomas A. Albani PE No.39380
MiTek USA, Inc. FL Cert 6634
6904 Parke East Blvd. Tampa FL 33610
Date:
February 12, 2018

MiTek USA, Inc.

ENGINEERED BY TRENCO A MiTek Affiliate

GENERAL SPECIFICATIONS

1. NAIL SIZE 16d (0.131" X 3.5")
2. INSTALL VALLEY TRUSSES (24" O.C. MAXIMUM) AND SECURE PER DETAIL A
3. BRACE VALLEY WEBS IN ACCORDANCE WITH THE INDIVIDUAL DESIGN DRAWINGS.
4. BASE TRUSS SHALL BE DESIGNED WITH A PURLIN SPACING EQUILIVANT TO THE RAKE DIMENSION OF THE VALLEY TRUSS SPACING.
5. NAILING DONE PER NDS - 01
6. VALLEY STUD SPACING NOT TO EXCEED 48" O.C.
7. ALL LUMBER SPECIES TO BE SP.

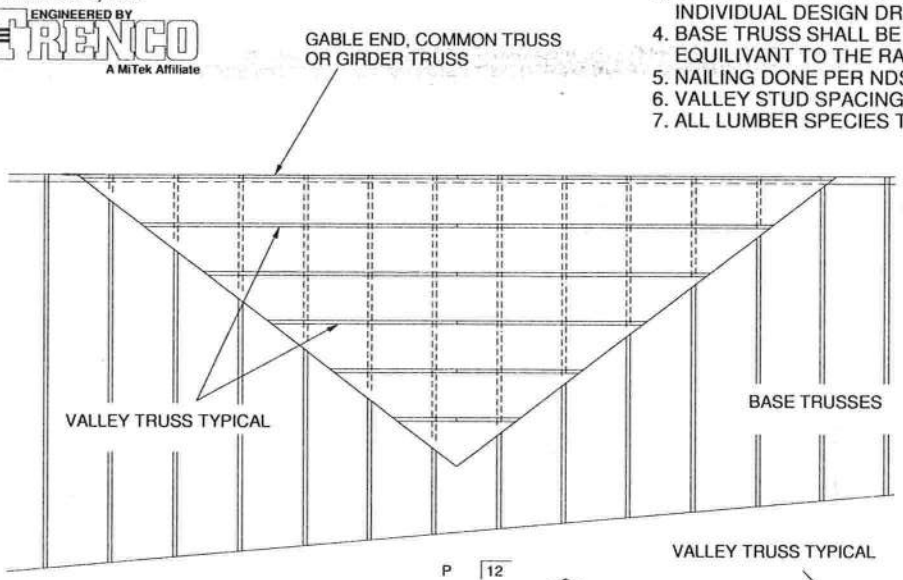

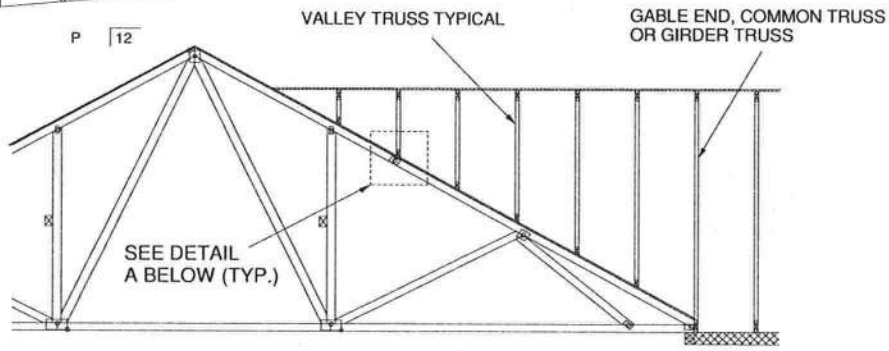

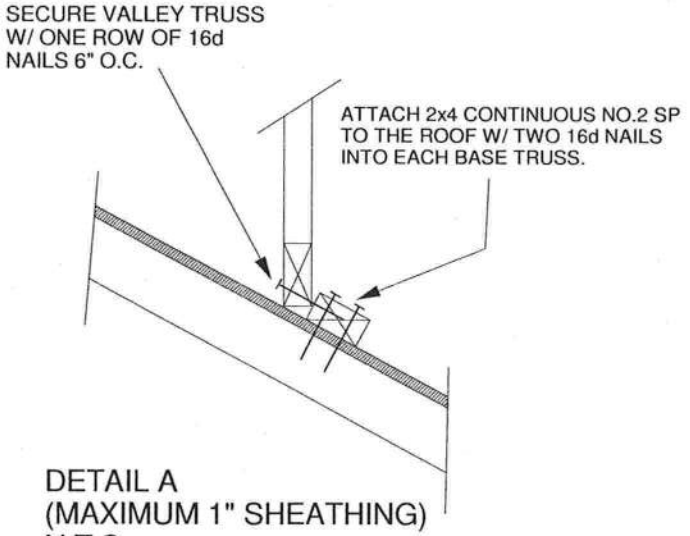

DETAIL A
(MAXIMUM 1" SHEATHING)
N.T.S.

WIND DESIGN PER ASCE 7-98, ASCE 7-02, ASCE 7-05 120 MPH
WIND DESIGN PER ASCE 7-10 150 MPH
MAX MEAN ROOF HEIGHT = 30 FEET
ROOF PITCH = MINIMUM 3/12 MAXIMUM 10/12
CATEGORY II BUILDING
EXPOSURE C OR B
WIND DURATION OF LOAD INCREASE : 1.60
MAX TOP CHORD TOTAL LOAD = 60 PSF
MAX SPACING = 24" O.C. (BASE AND VALLEY)
MINIMUM REDUCED DEAD LOAD OF 4.2 PSF
ON THE TRUSSES

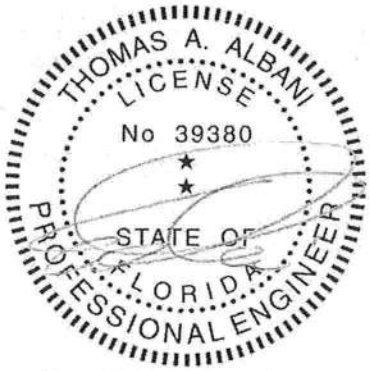

Thomas A. Albani PE No.39380
MiTek USA, Inc. FL Cert 6634
6904 Parke East Blvd. Tampa FL 33610
Date:
February 12, 2018

AUGUST 1, 2016	TRUSSED VALLEY SET DETAIL (HIGH WIND VELOCITY)	MII-VALLEY

MiTek USA, Inc.

ENGINEERED BY TRENCO A MiTek Affiliate

MiTek USA, Inc.

NOTE: VALLEY STUD SPACING NOT TO EXCEED 48" O.C. SPACING

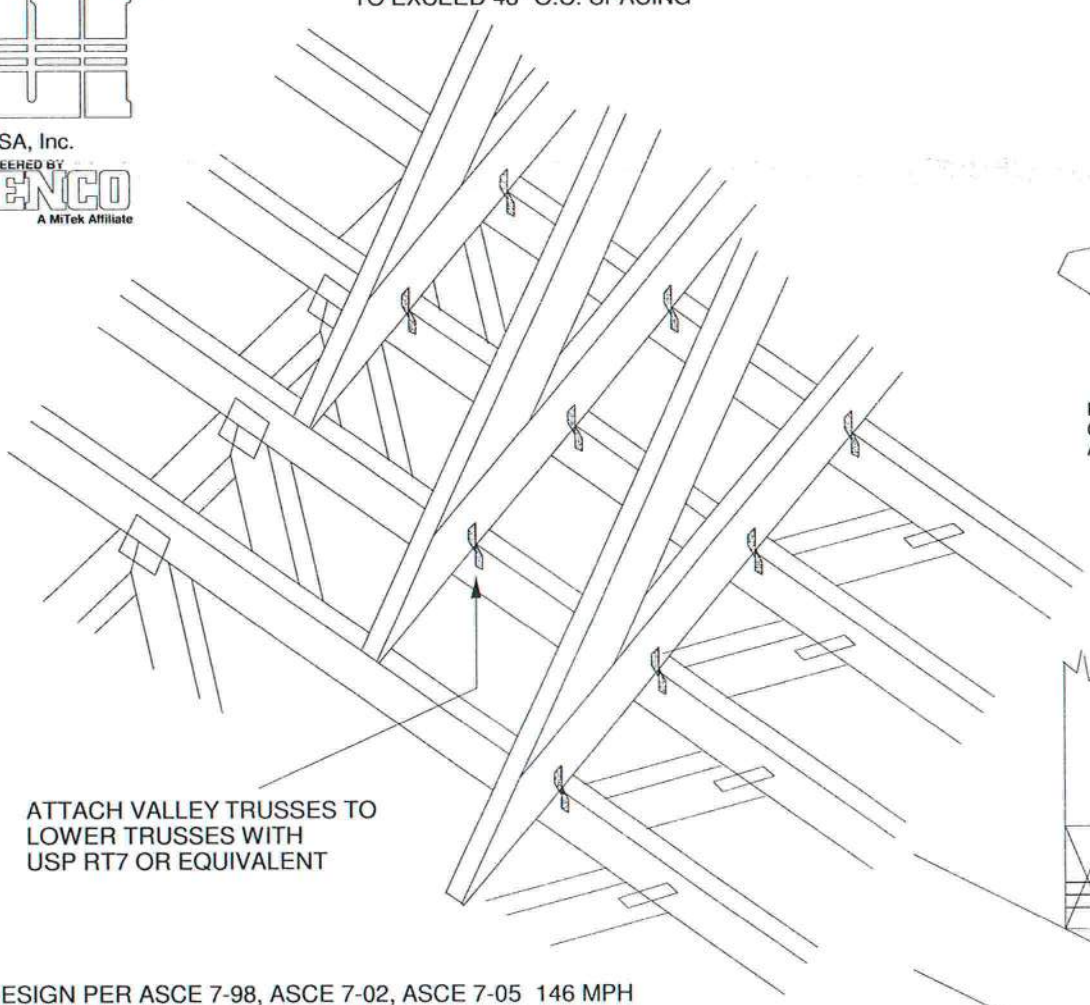

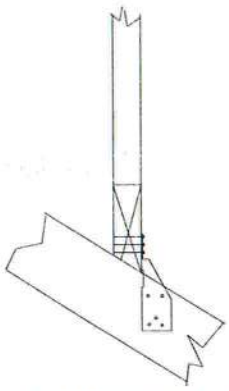

FOR BEVELED BOTTOM CHORD, CLIP MAY BE APPLIED TO EITHER FACE

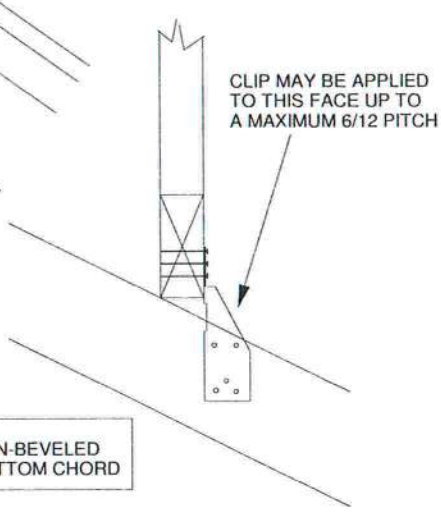

WIND DESIGN PER ASCE 7-98, ASCE 7-02, ASCE 7-05 146 MPH
WIND DESIGN PER ASCE 7-10 160 MPH
MAX MEAN ROOF HEIGHT = 30 FEET
CATEGORY II BUILDING
EXPOSURE B or C
WIND DURATION OF LOAD INCREASE : 1.6
MAX TOP CHORD TOTAL LOAD = 50 PSF
MAX SPACING = 24" O.C. (BASE AND VALLEY)

SUPPORTING TRUSSES DIRECTLY UNDER VALLEY TRUSSES MUST BE DESIGNED WITH A MAXIMUM UNBRACED LENGTH OF 2'-10" ON AFFECTED TOP CHORDS.

NOTES:
- SHEATHING APPLIED AFTER INSTALLATION OF VALLEY TRUSSES
- THIS DETAIL IS NOT APPLICABLE FOR SPF-S SPECIES LUMBER.

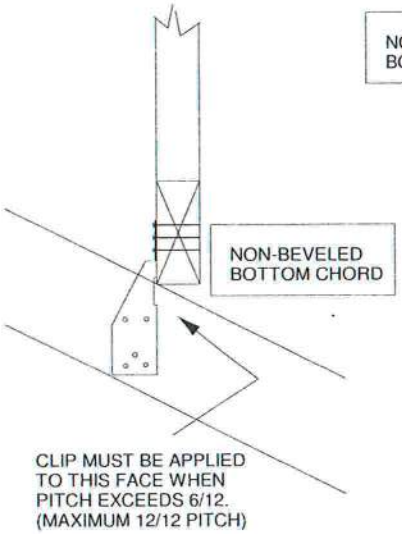

THOMAS A. ALBANI LICENSE No 39380 STATE OF FLORIDA PROFESSIONAL ENGINEER

Thomas A. Albani PE No.39380
MiTek USA, Inc. FL Cert 6634
6904 Parke East Blvd. Tampa FL 33610
Date:

January 19, 2018

AUGUST 1, 2016	Standard Gable End Detail	MII-GE146-001

MiTek USA, Inc.

ENGINEERED BY TRENCO A MiTek Affiliate

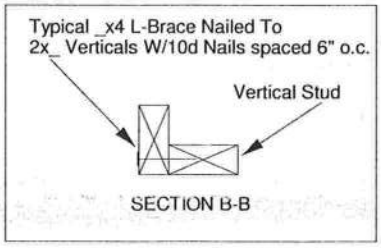

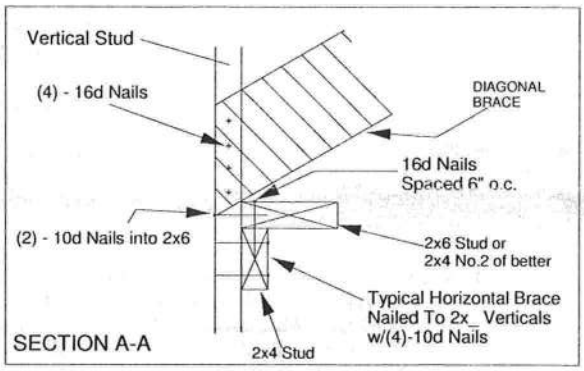

TRUSS GEOMETRY AND CONDITIONS SHOWN ARE FOR ILLUSTRATION ONLY.

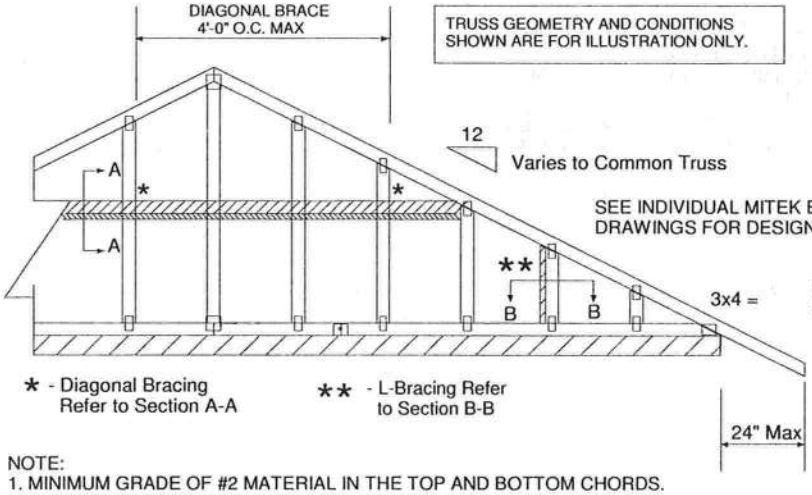

SEE INDIVIDUAL MITEK ENGINEERING DRAWINGS FOR DESIGN CRITERIA

PROVIDE 2x4 BLOCKING BETWEEN THE FIRST TWO TRUSSES AS NOTED. TOENAIL BLOCKING TO TRUSSES WITH (2) - 10d NAILS AT EACH END. ATTACH DIAGONAL BRACE TO BLOCKING WITH (5) - 10d NAILS.

(4) - 8d (0.131" X 2.5") NAILS MINIMUM, PLYWOOD SHEATHING TO 2x4 STD SP BLOCK

* - Diagonal Bracing Refer to Section A-A

** - L-Bracing Refer to Section B-B

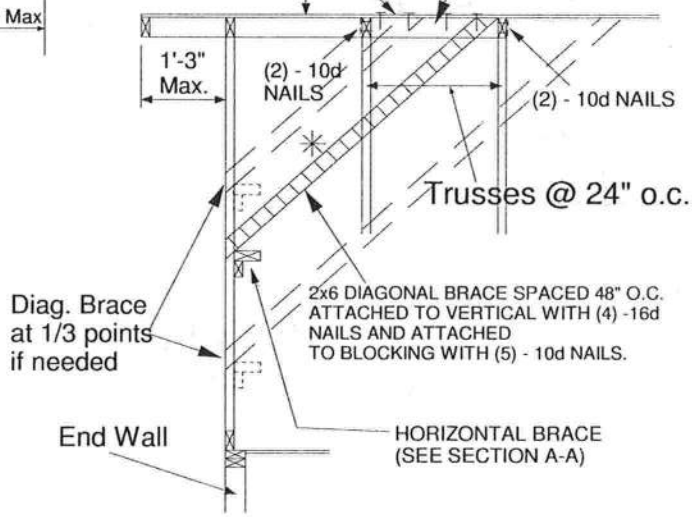

NOTE:
1. MINIMUM GRADE OF #2 MATERIAL IN THE TOP AND BOTTOM CHORDS.
2. CONNECTION BETWEEN BOTTOM CHORD OF GABLE END TRUSS AND WALL TO BE PROVIDED BY PROJECT ENGINEER OR ARCHITECT.
3. BRACING SHOWN IS FOR INDIVIDUAL TRUSS ONLY. CONSULT BLDG. ARCHITECT OR ENGINEER FOR TEMPORARY AND PERMANENT BRACING OF ROOF SYSTEM.
4. "L" BRACES SPECIFIED ARE TO BE FULL LENGTH. GRADES: 2x4 No 3/STUD SP OR BETTER WITH ONE ROW OF 10d NAILS SPACED 6" O.C.
5. DIAGONAL BRACE TO BE APPROXIMATELY 45 DEGREES TO ROOF DIAPHRAM AT 4'-0" O.C.
6. CONSTRUCT HORIZONTAL BRACE CONNECTING A 2x6 STUD AND A 2x4 STUD AS SHOWN WITH 16d NAILS SPACED 6" O.C. HORIZONTAL BRACE TO BE LOCATED AT THE MIDSPAN OF THE LONGEST STUD. ATTACH TO VERTICAL STUDS WITH (4) 10d NAILS THROUGH 2x4. (REFER TO SECTION A-A)
7. GABLE STUD DEFLECTION MEETS OR EXCEEDS L/240.
8. THIS DETAIL DOES NOT APPLY TO STRUCTURAL GABLES.
9. DO NOT USE FLAT BOTTOM CHORD GABLES NEXT TO SCISSOR TYPE TRUSSES.
10. NAILS DESIGNATED 10d ARE (0.131" X 3") AND NAILS DESIGNATED 16d ARE (0.131" X 3.5")

Minimum Stud Size Species and Grade	Stud Spacing	Without Brace	2x4 L-Brace	DIAGONAL BRACE	2 DIAGONAL BRACES AT 1/3 POINTS
		Maximum Stud Length			
2x4 SP No 3/Stud	12" O.C.	3-11-3	6-8-0	7-2-14	11-9-10
2x4 SP No 3/Stud	16" O.C.	3-6-14	5-9-5	7-1-13	10-8-11
2x4 SP No 3/Stud	24" O.C.	3-1-8	4-8-9	6-2-15	9-4-7

✳ Diagonal braces over 6'-3" require a 2x4 T-Brace attached to one edge. Diagonal braces over 12'-6" require 2x4 I-braces attached to both edges. Fasten T and I braces to narrow edge of web with 10d nails 8" o.c., with 3" minimum end distance. Brace must cover 90% of diagonal length.

MAXIMUM WIND SPEED = 146 MPH
MAX MEAN ROOF HEIGHT = 30 FEET
CATEGORY II BUILDING
EXPOSURE B or C
ASCE 7-98, ASCE 7-02, ASCE 7-05
DURATION OF LOAD INCREASE : 1.60

STUD DESIGN IS BASED ON COMPONENTS AND CLADDING. CONNECTION OF BRACING IS BASED ON MWFRS.

Thomas A. Albani PE No.39380
MiTek USA, Inc. FL Cert 6634
6904 Parke East Blvd. Tampa FL 33610
Date:

January 19, 2018

OCTOBER 5, 2016	REPLACE BROKEN OVERHANG	MII-REP13B

MiTek USA, Inc.

MiTek USA, Inc.

ENGINEERED BY TRENCO A MiTek Affiliate

TRUSS CRITERIA:
- LOADING: 40-10-0-10
- DURATION FACTOR: 1.15
- SPACING: 24" O.C.
- TOP CHORD: 2x4 OR 2x6
- PITCH: 4/12 - 12/12
- HEEL HEIGHT: STANDARD HEEL UP TO 12" ENERGY HEEL
- END BEARING CONDITION

NOTES:
1. ATTACH 2x_ SCAB (MINIMUM NO.2 GRADE SPF, HF, SP, DF) TO ONE FACE OF TRUSS WITH TWO ROWS OF 10d (0.131" X 3") SPACED 6" O.C.
2. THE END DISTANCE, EDGE DISTANCE, AND SPACING OF NAILS SHALL BE SUCH AS TO AVOID UNUSUAL SPLITTING OF THE WOOD.
3. WHEN NAILING THE SCABS, THE USE OF A BACKUP WEIGHT IS RECOMMENDED TO AVOID LOOSENING OF THE CONNECTOR PLATES AT THE JOINTS OR SPLICES.

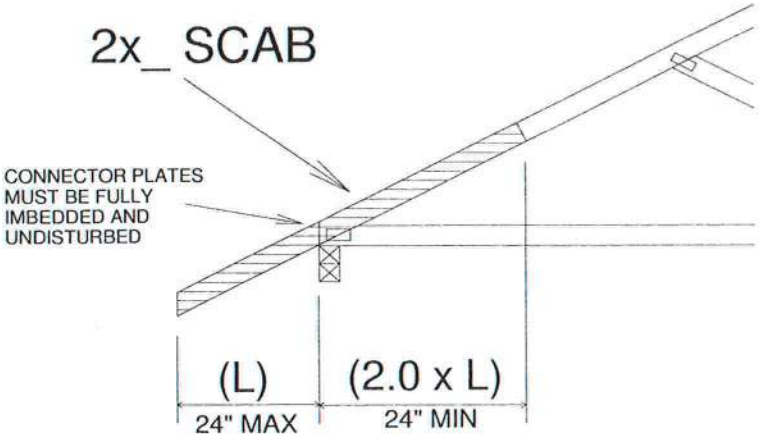

IMPORTANT
This detail to be used only with trusses (spans less than 40') spaced 24" o.c. maximum and having pitches between 4/12 and 12/12 and total top chord loads not exceeding 50 psf.
Trusses not fitting these criteria should be examined individually.

REFER TO INDIVIDUAL TRUSS DESIGN FOR PLATE SIZES AND LUMBER GRADES

THOMAS A. ALBANI LICENSE No 39380 STATE OF FLORIDA PROFESSIONAL ENGINEER

Thomas A. Albani PE No.39380
MiTek USA, Inc. FL Cert 6634
6904 Parke East Blvd. Tampa FL 33610
Date:
February 12, 2018

MiTek USA, Inc.

ENGINEERED BY TRENCO A MiTek Affiliate

TO MINIMIZE VIBRATION COMMON TO ALL SHALLOW FRAMING SYSTEMS, 2x6 "STRONGBACK" IS RECOMMENDED, LOCATED EVERY 8 TO 10 FEET ALONG A FLOOR TRUSS.

NOTE 1: 2X6 STRONGBACK ORIENTED VERTICALLY MAY BE POSITIONED DIRECTLY UNDER THE TOP CHORD OR DIRECTLY ABOVE THE BOTTOM CHORD. SECURELY FASTENED TO THE TRUSS USING ANY OF THE METHODS ILLUSTRATED BELOW.

NOTE 2: STRONGBACK BRACING ALSO SATISFIES THE LATERAL BRACING REQUIREMENTS FOR THE BOTTOM CHORD OF THE TRUSS WHEN IT IS PLACED ON TOP OF THE BOTTOM CHORD, IS CONTINUOUS FROM END TO END, CONNECTED WITH A METHOD OTHER THAN METAL FRAMING ANCHOR, AND PROPERLY CONNECTED, BY OTHERS, AT THE ENDS.

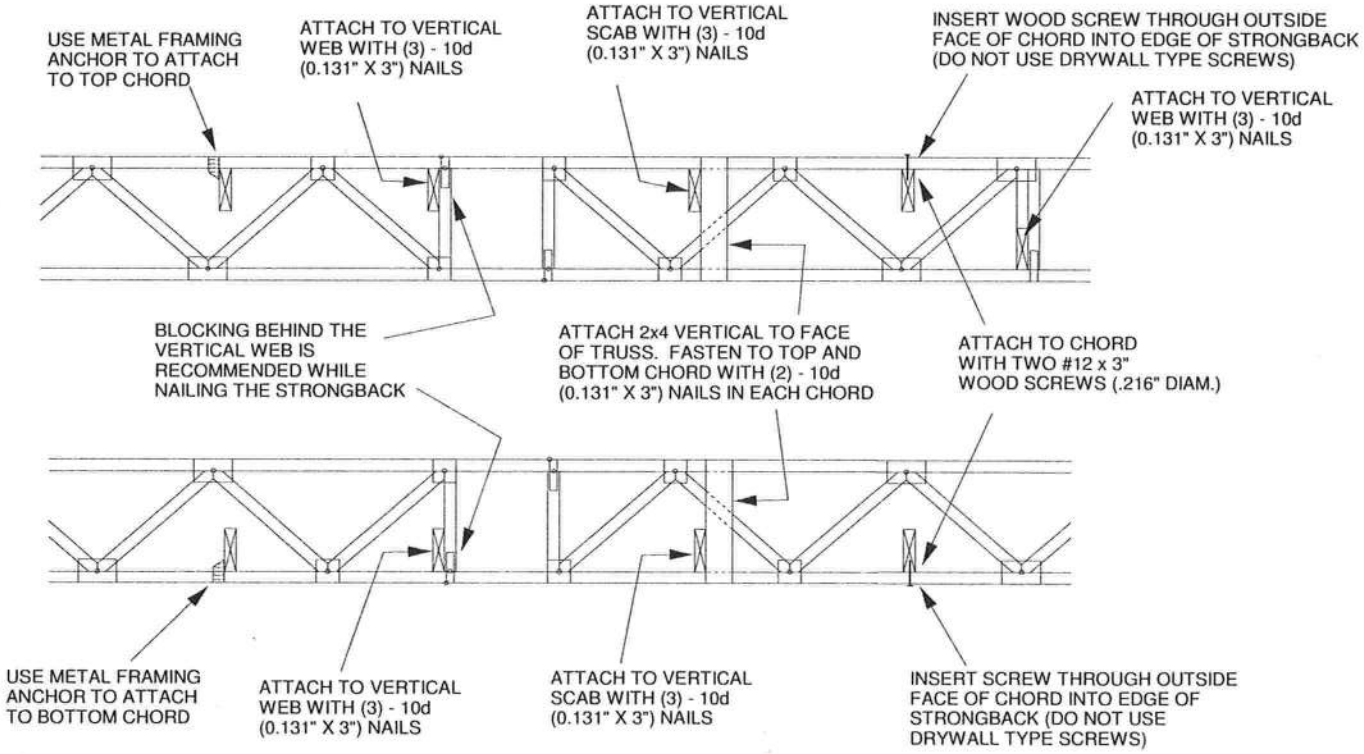

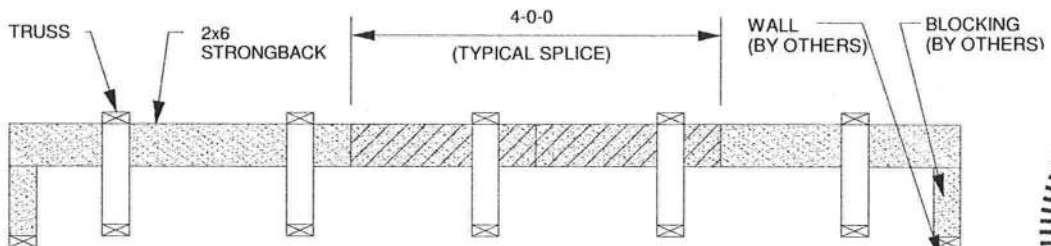

THE STRONGBACKS SHALL BE SECURED AT THEIR ENDS TO ADEQUATE SUPPORT, DESIGNED BY OTHERS. IF SPLICING IS NECESSARY, USE A 4'-0" LONG SCAB CENTERED ON THE SPLICE AND JOINED WITH (12) - 10d (0.131" X 3") NAILS EQUALLY SPACED.

ALTERNATE METHOD OF SPLICING:
OVERLAP STRONGBACK MEMBERS A MINIMUM OF 4'-0" AND FASTEN WITH (12) - 10d (0.131" X 3") NAILS STAGGERED AND EQUALLY SPACED.
(TO BE USED ONLY WHEN STRONGBACK IS NOT ALIGNED WITH A VERTICAL)

THOMAS A. ALBANI
LICENSE
No 39380
STATE OF FLORIDA
PROFESSIONAL ENGINEER

Thomas A. Albani PE No.39380
MiTek USA, Inc. FL Cert 6634
6904 Parke East Blvd. Tampa FL 33610
Date:
February 12, 2018

6/12 PITCH – 18" O/H

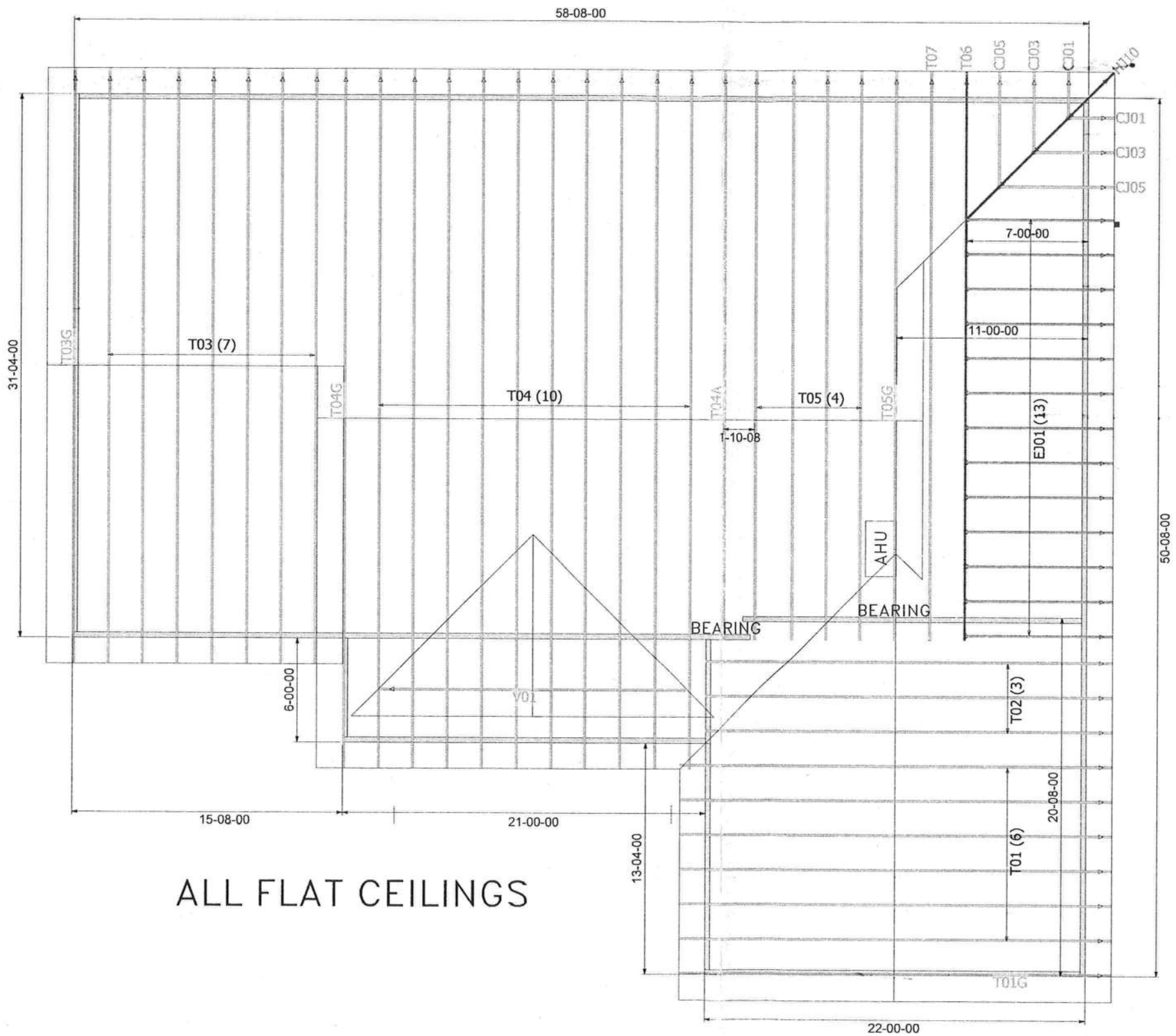

ALL FLAT CEILINGS

MITEK PLATE APPROVAL #'S 2197.2–2197.4, BOISE EWP PRODUCT #'S LVL FL1644–R2, BCI JOISTS FL1392–R2

THE ARROW HEAD AT THE END OF THE TRUSS ON THE TRUSS PLACEMENT PLAN (LAYOUT) CORRESPONDS WITH THE LEFT SIDE OF THE INDIVIDUAL TRUSS DRAWING. USE THIS AS AN ORIENTATION GUIDE WHEN SETTING THE TRUSSES ON THE STRUCTURE.

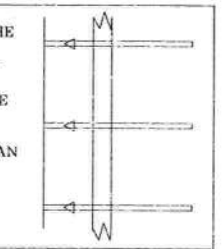

General Notes:

- Per ANSI/TPI 1-2002 all " Truss to Wall" connections are the responsibility of the Building Designer, not the Truss Manufacturer.
- Use Manufacturer's specifications for all hanger connections unless noted otherwise.
- Trusses are to be 24" o.c. U.N.O.
- All hangers are to be Simpson or equivalent U.N.O.- Use 10d x 1 1/2" Nails in hanger connections to single ply girder trusses.
- Trusses are not designed to support brick U.N.O.
- Dimensions are Feet-Inches- Sixteenths

Notes:

No back charges will be accepted by Builders FirstSource unless approved in writing first. 850-835-4541

ACQ lumber is corrisive to truss plates. Any ACQ lumber that comes in contact with truss plates (i.e. seabbed on tails) must have an approved barrier applied first.

Refer to BCSI-B1 Summary Sheet-Guide for handling, Installing and Bracing of Metal Plate Connected Wood Truss prior to and during truss installation.

It is the responsibility of the Contractor to ensure of the proper orientation of the truss placement plans as to the construction documents and field conditions of the structure orientation. If a reversed or flipped layout is required, it will be supplied at no extra cost by Builders FirstSource.

It is the responsibility of the Contractor to make sure the placement of trusses are adjusted for plumbing drops, can lights, ect..., so the trusses do not interfere with these type of items.

All common framed roof or floor systems must be designed as to NOT impose any loads on the floor trusses below. The floor trusses have not been designed to carry any additional loads from above.

This truss placement plan was not created by an engineer, but rather by the Builders FirstSource staff and is solely to be used as an installation guide and does not require a seal. Complete truss engineering and analysis can be found on the truss design drawings which may be sealed by the truss design engineer.

Gable end trusses require continuous bottom chord bearing. Refer to local codes for wall framing requirements.

Although all attempts have been made to do so, trusses may not be designed symmetrically. Please refer to the individual truss drawings and truss placement plans for proper orientation and placement.

Builders FIRSTSOURCE

Lake City
PHONE: 386-755-6894
FAX: 386-755-7973

Jacksonville
PHONE: 904-772-6100
FAX: 904-772-1973

Tallahassee
PHONE: 850-576-5177

Builder: RON DAVID PLASTERING		
Legal Address: TBD Forest Country Spec		
Model: 1815		
Date: 1-19-22	Drawn By: KLH	Original Ref #: 3046319
Floor 1 Job#: N/A	Floor 2 Job#: N/A	Roof Job #: 3046319