12/09/2010

Columbia County Building Permit

This Permit Must Be Prominently Posted on Premises During Construction

PERMIT
000029055

APPLICANT RICHARD J. KEEN PHONE 386.752.2826
ADDRESS 650 SW MAINB BLVD. LAKE CITY FL 32025
OWNER STEPHEN & PHYLLIS & COLIN GLENN PHONE
ADDRESS 185 SW ARROWHEAD TERRACE LAKE CITY FL 32024
CONTRACTOR JAMES H. JOHNSTON PHONE 386.755.2826
LOCATION OF PROPERTY 47-S TO C-242,TR TO ARROWHEAD TERRACE,TR @ CASEY JONES CAMPGROUND, HOUSE SITE IS BACK TOWARDS RETENTION POND ON R.
TYPE DEVELOPMENT ATTACHED GARAGE ESTIMATED COST OF CONSTRUCTION 52900.00
HEATED FLOOR AREA TOTAL AREA 1058.00 HEIGHT 16.00 STORIES 1
FOUNDATION CONCRETE WALLS FRAMED ROOF PITCH 6/12 FLOOR SLAB
LAND USE & ZONING CHI MAX. HEIGHT 35
Minimum Set Back Requirments: STREET-FRONT 20.00 REAR 15.00 SIDE 5.00
NO. EX.D.U. 1 FLOOD ZONE X DEVELOPMENT PERMIT NO.

PARCEL ID 30-4S-17-08885-005 SUBDIVISION
LOT BLOCK PHASE UNIT TOTAL ACRES 11.42

CRC1328128
Culvert Permit No. Culvert Waiver Contractor's License Number Applicant/Owner/Contractor
EXISTING X10-436 BK TC N
Driveway Connection Septic Tank Number LU & Zoning checked by Approved for Issuance New Resident

COMMENTS: NOC ON FILE
ACCESSORY STRUCTURE TO AN ACCESSORY USE WITHIN THE ZONING DISTRICT

Check # or Cash 3641

FOR BUILDING & ZONING DEPARTMENT ONLY

Temporary Power date/app. by Foundation date/app. by Monolithic (footer/Slab) date/app. by
Under slab rough-in plumbing date/app. by Slab date/app. by Sheathing/Nailing date/app. by
Framing date/app. by Insulation date/app. by
Rough-in plumbing above slab and below wood floor date/app. by Electrical rough-in date/app. by
Heat & Air Duct date/app. by Peri. beam (Lintel) date/app. by Pool date/app. by
Permanent power date/app. by C.O. Final date/app. by Culvert date/app. by
Pump pole date/app. by Utility Pole date/app. by M/H tie downs, blocking, electricity and plumbing date/app. by
Reconnection date/app. by RV date/app. by Re-roof date/app. by

BUILDING PERMIT FEE $ 265.00 CERTIFICATION FEE $ 5.29 SURCHARGE FEE $ 5.29
MISC. FEES $ 0.00 ZONING CERT. FEE $ FIRE FEE $ 0.00 WASTE FEE $
FLOOD DEVELOPMENT FEE $ FLOOD ZONE FEE $ CULVERT FEE $ **TOTAL FEE** 275.58
INSPECTORS OFFICE CLERKS OFFICE

NOTICE: IN ADDITION TO THE REQUIREMENTS OF THIS PERMIT, THERE MAY BE ADDITIONAL RESTRICTIONS APPLICABLE TO THIS PROPERTY THAT MAY BE FOUND IN THE PUBLIC RECORDS OF THIS COUNTY. AND THERE MAY BE ADDITIONAL PERMITS REQUIRED FROM OTHER GOVERNMENTAL ENTITIES SUCH AS WATER MANAGEMENT DISTRICTS, STATE AGENCIES, OR FEDERAL AGENCIES.

"WARNING TO OWNER: YOUR FAILURE TO RECORD A NOTICE OF COMMENCEMENT MAY RESULT IN YOUR PAYING TWICE FOR IMPROVEMENTS TO YOUR PROPERTY. IF YOU INTEND TO OBTAIN FINANCING, CONSULT WITH YOUR LENDER OR AN ATTORNEY BEFORE RECORDING YOUR NOTICE OF COMMENCEMENT."

EVERY PERMIT ISSUED SHALL BECOME INVALID UNLESS THE WORK AUTHORIZED BY SUCH PERMIT IS COMMENCED WITHIN 180 DAYS AFTER ITS ISSUANCE, OR IF THE WORK AUTHORIZED BY SUCH PERMIT IS SUSPENDED OR ABANDONED FOR A PERIOD OF 180 DAYS AFTER THE TIME THE WORK IS COMMENCED. A VALID PERMIT RECIEVES AN APPROVED INSPECTION EVERY 180 DAYS. WORK SHALL BE CONSIDERED NOT SUSPENDED, ABANDONED OR INVALID WHEN THE PERMIT HAS RECIEVED AN APPROVED INSPECTION WITHIN 180 DAYS OT THE PREVIOUS INSPECTION.

The Issuance of this Permit Does Not Waive Compliance by Permittee with Deed Restrictions.

Columbia County Building Permit Application

For Office Use Only Application # 1012-02 Date Received 12/1/10 By LH Permit # 29055

Zoning Official BLK Date 08.12.10 Flood Zone X Land Use High Inter. Zoning CHI

FEMA Map # N/A Elevation N/A MFE N/A River N/A Plans Examiner T.C. Date 12-6-10

Comments accessory structure to an accessory use within the zoning district

☑ NOC ☑ EH ☑ Deed or PA ☑ Site Plan ☑ State Road Info ☐ Parent Parcel #

☐ Dev Permit # ☐ In Floodway ☑ Letter of Auth. from Contractor ☑ W Comp. letter

IMPACT FEES: EMS Fire Corr Road/Code

School = TOTAL N/A accessory structure ☑ VF form

Septic Permit No. X10-436 IN BOX Fax 386-752-6630

Name Authorized Person Signing Permit Richard Keen Phone 386-623-4629

Address 1256 SW CR 240 Lake City FL 32025

Owners Name Stephen + Phyllis + Colin Glenn Phone

911 Address 185 SW Arrowhead Rd.

Contractors Name James Johnston Phone 386-365-5999

Address 650 SW Main Blvd. Lake City FL 32025

Fee Simple Owner Name & Address

Bonding Co. Name & Address

Architect/Engineer Name & Address Mark Disosway P.O. Box 868 Lake City FL 32056

Mortgage Lenders Name & Address N/A

Circle the correct power company – FL Power & Light – Clay Elec. – Suwannee Valley Elec. – Progress Energy

Property ID Number 30-4s-17-08885-005 Estimated Cost of Construction 27,000.00

Subdivision Name Lot Block Unit Phase

Driving Directions 47 South turn Right on 242, Right on Arrowhead Terrace, Take third street into Casey Jones Campgroun follow to end see new house Number of Existing Dwellings on Property 1

Construction of Garage Addition to SFD Total Acreage 11.42 Lot Size

Do you need a - Culvert Permit or Culvert Waiver or Have an Existing Drive Total Building Height

Actual Distance of Structure from Property Lines - Front 100+ Side 100+ Side 100+ Rear 100+

Number of Stories 1 Heated Floor Area N/A Total Floor Area 1058 Roof Pitch 6/12

Application is hereby made to obtain a permit to do work and installations as indicated. I certify that no work or installation has commenced prior to the issuance of a permit and that all work be performed to meet the standards of all laws regulating construction in this jurisdiction.

Spoke to Richard
12-8-10 LH

Columbia County Building Permit Application

TIME LIMITATIONS OF APPLICATION : An application for a permit for any proposed work shall be deemed to have been abandoned 180 days after the date of filing, unless such application has been pursued in good faith or a permit has been issued; except that the building official is authorized to grant one or more extensions of time for additional periods not exceeding 90 days each. The extension shall be requested in writing and justifiable cause demonstrated.

TIME LIMITATIONS OF PERMITS: Every permit issued shall become invalid unless the work authorized by such permit is commenced within 180 days after its issuance, or if the work authorized by such permit is suspended or abandoned for a period of 180 days after the time work is commenced. A valid permit receives an approved inspection every 180 days. Work shall be considered not suspended, abandoned or invalid when the permit has received an approved inspection within 180 days of the previous approved inspection.

FLORIDA'S CONSTRUCTION LIEN LAW: Protect Yourself and Your Investment: According to Florida Law, those who work on your property or provide materials, and are not paid-in-full, have a right to enforce their claim for payment against your property. This claim is known as a construction lien. If your contractor fails to pay subcontractors or material suppliers or neglects to make other legally required payments, the people who are owed money may look to your property for payment, even if you have paid your contractor in full.
This means if a lien is filed against your property, it could be sold against your will to pay for labor, materials or other services which your contractor may have failed to pay.

NOTICE OF RESPONSIBILITY TO BUILDING PERMITEE: ***YOU ARE HEREBY NOTIFIED*** as the recipient of a building permit from Columbia County, Florida, you will be held responsible to the County for any damage to sidewalks and/or road curbs and gutters, concrete features and structures, together with damage to drainage facilities, removal of sod, major changes to lot grades that result in ponding of water, or other damage to roadway and other public infrastructure facilities caused by you or your contractor, subcontractors, agents or representatives in the construction and/or improvement of the building and lot for which this permit is issued. No certificate of occupancy will be issued until all corrective work to these public infrastructures and facilities has been corrected.

WARNING TO OWNER: YOUR FAILURE TO RECORD A NOTICE OF COMMENCMENT MAY RESULT IN YOU PAYING TWICE FOR IMPROVEMENTS TO YOUR PROPERTY. A NOTICE OF COMMENCEMENT MUST BE RECORDED AND POSTED ON THE JOB SITE BEFORE THE FIRST INSPECTION. IF YOU INTEND TO OBTAIN FINANCING, CONSULT WITH YOUR LENDER OR ATTORNEY BEFORE RECORDING YOUR NOTICE OF COMMENCEMENT.

OWNERS CERTIFICATION: I CERTIFY THAT ALL THE FOREGOING INFORMATION IS ACCURATE AND THAT ALL WORK WILL BE DONE IN COMPLIANCE WITH ALL APPLICABLE LAWS REGULATING CONSTRUCTION AND ZONING.

NOTICE TO OWNER: There are some properties that may have deed restrictions recorded upon them. These restrictions may limit or prohibit the work applied for in your building permit. It may be to your advantage to check and see if your property is encumbered by any restrictions.

(Owners Must Sign All Applications Before Permit Issuance.)

Owners Signature ****OWNER BUILDERS MUST PERSONALLY APPEAR AND SIGN THE BUILDING PERMIT.**

CONTRACTORS AFFIDAVIT: By my signature I understand and agree that I have informed and provided this written statement to the owner of all the above written responsibilities in Columbia County for obtaining this Building Permit including all application and permit time limitations.

Contractor's Signature (Permitee)

Contractor's License Number CRC1328128
Columbia County
Competency Card Number_____

Affirmed under penalty of perjury to by the Contractor and subscribed before me this 29 **day of** November **20**10.

Personally known X **or Produced Identification**_____

State of Florida Notary Signature (For the Contractor)

SEAL:

NOTARY PUBLIC STATE OF FLORIDA
CAREY F. CHANDLER
MY COMMISSION # DD 866347
EXPIRES: May 22, 2013
Bonded Thru Budget Notary Services

SUBCONTRACTOR VERIFICATION FORM

APPLICATION NUMBER _____ CONTRACTOR _____ PHONE _____

THIS FORM MUST BE SUBMITTED PRIOR TO THE ISSUANCE OF A PERMIT

In Columbia County one permit will cover all trades doing work at the permitted site. It is REQUIRED that we have records of the subcontractors who actually did the trade specific work under the permit. Per Florida Statute 440 and Ordinance 89-6, a contractor shall require all subcontractors to provide evidence of workers' compensation or exemption, general liability insurance and a valid Certificate of Competency license in Columbia County.

Any changes, the permitted contractor is responsible for the corrected form being submitted to this office prior to the start of that subcontractor beginning any work. Violations will result in stop work orders and/or fines.

ELECTRICAL	Print Name Conner Electric, Inc. License #: ER 13013192	Signature Michael S. Co Phone #: 386-965-9005
MECHANICAL/ A/C _____	Print Name N/A License #:	Signature Phone #:
PLUMBING/ GAS	Print Name N/A License #:	Signature Phone #:
ROOFING	Print Name James Johnston License #:	Signature Phone #:
SHEET METAL	Print Name License #:	Signature Phone #:
FIRE SYSTEM/ SPRINKLER	Print Name License#:	Signature Phone #:
SOLAR	Print Name License #:	Signature Phone #:

Specialty License	License Number	Sub-Contractors Printed Name	Sub-Contractors Signature
MASON	—	—	—
CONCRETE FINISHER	CRC1328128	James Johnston	
FRAMING	"	James Johnston	
INSULATION	—	—	—
STUCCO	—	—	—
DRYWALL	CRC1328128	James Johnston	
PLASTER			
CABINET INSTALLER			
PAINTING	CRC1328128	James Johnston	
ACOUSTICAL CEILING		—	—
GLASS	—		—
CERAMIC TILE	—	—	—
FLOOR COVERING	—	—	—
ALUM/VINYL SIDING	CRC1328128	James Johnston	
GARAGE DOOR	CRC1328128	James Johnston	
METAL BLDG ERECTOR			

F. S. 440.103 Building permits; identification of minimum premium policy.--Every employer shall, as a condition to applying for and receiving a building permit, show proof and certify to the permit issuer that it has secured compensation for its employees under this chapter as provided in ss. 440.10 and 440.38, and shall be presented each time the employer applies for a building permit.

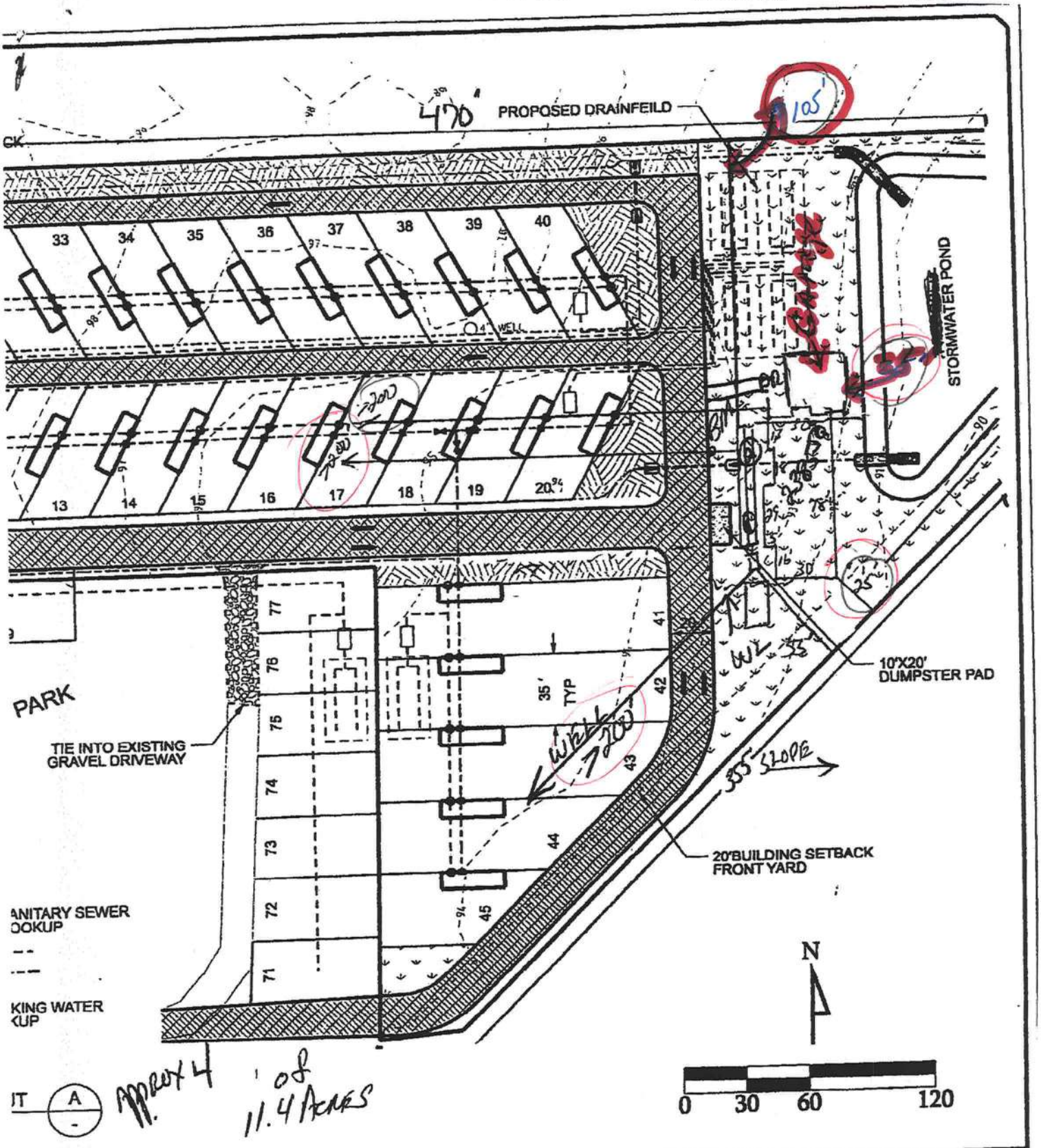

.O. BOX 970 AKE CITY, FL 32056 HONE: 386.623.4303 AX: 386.754.4085 rewsengineeringservices.com	Brett A. Crews, P.E. 65592	DRAWN BY: BC APPROVED BY: BC	**CASEY JONES RV PARK EXPANSION** **SITE PLAN**	CES PROJECT NO.: 2008-001 SHEET: 3

NOTICE OF COMMENCEMENT

County Clerk's Office Stamp or Seal

Tax Parcel Identification Number 30-45-17-03885-005 PH

THE UNDERSIGNED hereby gives notice that improvements will be made to certain real property, and in accordance with Section 713.13 of the Florida Statutes, the following information is provided in this **NOTICE OF COMMENCEMENT.**

1. Description of property *(legal description)*: Casey Jones Campground
   a) Street *(job)* Address: 185 SW Arrowhead Terrace Lc FL 32024
2. General description of improvements: New management building
3. Owner Information
   a) Name and address: Stephen & Phyllis Glenn
   b) Name and address of fee simple titleholder (if other than owner)
   c) Interest in property
4. Contractor Information
   a) Name and address: Hometown Homes 650 SW Main Blvd. LC 32025
   b) Telephone No.: 755-2826 Fax No. (Opt.)
5. Surety Information
   a) Name and address:
   b) Amount of Bond:
   c) Telephone No.: Fax No. (Opt.)
6. Lender
   a) Name and address:
   b) Phone No.
7. Identity of person within the State of Florida designated by owner upon whom notices or other documents may be served:
   a) Name and address:
   b) Telephone No.: Fax No. (Opt.)

8. In addition to himself, owner designates the following person to receive a copy of the Lienor's Notice as provided in Section 713.13(l)(b). Florida Statutes:
   a) Name and address:
   b) Telephone No.: Fax No. (Opt.)

9. Expiration date of Notice of Commencement **(the expiration date is one year from the date of recording unless a different date is specified):**

WARNING TO OWNER: ANY PAYMENTS MADE BY THE OWNER AFTER THE EXPIRATION OF THE NOTICE OF COMMENCEMENT ARE CONSIDERED IMPROPER PAYMENTS UNDER CHAPTER 713, PART I, SECTION 713.13, FLORIDA STATUTES, AND CAN RESULT IN YOUR PAYING TWICE FOR IMPROVEMENTS TO YOUR PROPERTY; A NOTICE OF COMMENCEMENT MUST BE RECORDED AND POSTED ON THE JOB SITE BEFORE THE FIRST INSPECTION. IF YOU INTEND TO OBTAIN FINANCING, CONSULT YOUR LENDER OR AN ATTORNEY BEFORE COMMENCING WORK OR RECORDING YOUR NOTICE OF COMMENCEMENT.

STATE OF FLORIDA
COUNTY OF COLUMBIA

10. X
Signature of Owner or Owner's Authorized Office/Director/Partner/Manager

Stephen Glenn
Print Name

The foregoing instrument was acknowledged before me, a Florida Notary, this 11th day of March, 20 10, by: Stephen Glenn as owner **(type of authority, e.g. officer, trustee, attorney fact) for** Self **(name of party on behalf of whom instrument was executed).**

Personally Known X OR Produced Identification ____ Type

Notary Signature Carey F Chandler Notary Stamp or Seal:

NOTARY PUBLIC STATE OF FLORIDA
CAREY F. CHANDLER
MY COMMISSION # DD 866347
EXPIRES: May 22, 2013
Bonded Thru Budget Notary Services

—AND—

11. Verification pursuant to Section 92.525, Florida Statutes. Under penalties of perjury, I declare that I have read the foregoing and that the facts stated in it are true to the best of my knowledge and belief.

X
Signature of Natural Person Signing (in line #10 above.)

We the undersigned do understand and agree for a home to be built on the property in which we are part owners of. The home will be built at the Casey Jones Campground.

Thank You,

PHYLLIS GLENN

Print Name

Phyllis Glenn

Signature

Colin Glenn

Print Name

Signature

SFD Permit 28424

Columbia County Property Appraiser

DB Last Updated: 11/4/2010

2010 Tax Year

Tax Collector | Tax Estimator | Property Card | Parcel List Generator | Interactive GIS Map | Print

Parcel: 30-4S-17-08885-005

<< Next Lower Parcel | Next Higher Parcel >>

<< Prev Search Result: 2 of 6 Next >>

Owner & Property Info

Owner's Name	GLENN STEPHEN C & PHYLLIS J &		
Mailing Address	GLENN COLIN J (JTWRS) 185 SW ARROWHEAD TER LAKE CITY, FL 32024		
Site Address	185 SW ARROWHEAD TER		
Use Desc. (code)	RV PARK/CA (003600)		
Tax District	2 (County)	**Neighborhood**	30417
Land Area	11.420 ACRES	**Market Area**	06
Description	NOTE: This description is not to be used as the Legal Description for this parcel in any legal transaction.		

COMM NW COR OF SEC, RUN EAST 3 2.98 FT TO E R/W OF ARROWHEAD TER, S ALONG R/W 260.50 FT FOR POB, RUN E 1064.34 FT, SW 609.20 FT, W 339.56 FT, SOUTH 591.82 FT TO N R/W OF CR 242, W ALONG R/W 150 FT, N 290.77 FT, W 150 FT TO E R/W OF ARROW HEAD TER, N ALONG R/W 730.50 FT TO POB ORB 338-09, 471-201, 492-588, 533-739, 566-083, 530-604, 774-1284, 1286, JTWRS 936-414, ORB 1143-456, WD 1144 -1933, WD 114 ...more>>>

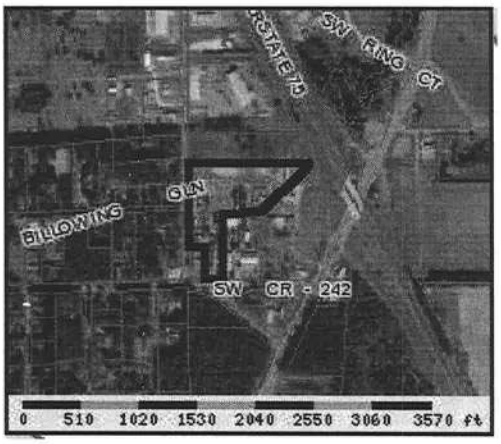

Property & Assessment Values

2010 Certified Values		
Mkt Land Value	cnt: (0)	$194,710.00
Ag Land Value	cnt: (6)	$0.00
Building Value	cnt: (5)	$160,262.00
XFOB Value	cnt: (11)	$72,575.00
Total Appraised Value		$427,547.00
Just Value		$427,547.00
Class Value		$0.00
Assessed Value		$427,547.00
Exempt Value	(code: DH)	$72,935.00
Total Taxable Value		Cnty: $354,612 Other: $354,612 | Schl: $377,547

2011 Working Values

NOTE:
2011 Working Values are NOT certified values and therefore are subject to change before being finalized for ad valorem assessment purposes.

Show Working Values

Sales History

Show Similar Sales within 1/2 mile

Sale Date	OR Book/Page	OR Code	Vacant / Improved	Qualified Sale	Sale RCode	Sale Price
10/9/2008	1160/835	WD	I	U	01	$100.00
3/11/2008	1145/1077	WD	I	U	03	$250,000.00
2/28/2008	1144/1933	WD	I	U	03	$100.00
2/13/2008	1143/456	WD	I	U	03	$500,000.00
11/14/2007	1136/686	WD	I	U	01	$100.00
9/27/2001	936/414	WD	I	Q		$475,000.00
5/7/1993	774/1286	WD	I	U	10	$50,000.00
4/29/1993	774/1284	WD	V	Q		$25,000.00
8/21/1987	630/604	WD	I	U		$135,000.00

Building Characteristics

Bldg Item	Bldg Desc	Year Blt	Ext. Walls	Heated S.F.	Actual S.F.	Bldg Value
1	SINGLE FAM (000100)	1975	BELOW AVG. (03)	696	1564	$29,805.00
4	CLUB HOUSE (006900)	1992	WD ON PLY (08)	600	750	$7,896.00
5	MOBILE HME (000800)	2002	WD ON PLY (31)	1404	2705	$34,429.00
6	SFR MANUF (000200)	2006	WD ON PLY (31)	1196	1196	$29,963.00
8	CLUB HOUSE (006900)	1996	WD ON PLY (31)	2370	2370	$58,169.00
	Note: All S.F. calculations are based on exterior building dimensions.					

Extra Features & Out Buildings

Code	Desc	Year Blt	Value	Units	Dims	Condition (% Good)
0294	SHED WOOD/	0	$1,500.00	0000001.000	28 x 24 x 0	(000.00)
0269	RVP HOOKUP	0	$5,175.00	0000009.000	0 x 0 x 0	AP (050.00)
0269	RVP HOOKUP	0	$6,900.00	0000012.000	0 x 0 x 0	AP (050.00)
0260	PAVEMENT-A	2000	$5,000.00	0000001.000	0 x 0 x 0	(000.00)
0294	SHED WOOD/	1993	$2,500.00	0000001.000	34 x 14 x 0	(000.00)

Land Breakdown

Lnd Code	Desc	Units	Adjustments	Eff Rate	Lnd Value
002820	RV PARK (MKT)	1.05 AC	1.00/1.00/0.25/1.00	$16,874.29	$17,718.00
009945	WELL/SEPT (MKT)	1 UT - (0000000.000AC)	1.00/1.00/1.00/1.00	$2,000.00	$2,000.00
000200	MBL HM (MKT)	1.05 AC	1.00/1.00/0.25/1.00	$16,874.29	$17,718.00
003600	RV PARKS/C (MKT)	1 AC	1.00/1.00/0.25/1.00	$16,875.00	$16,875.00
001010	COMM ACRGE (MKT)	4.51 AC	1.00/1.00/0.25/1.00	$16,874.94	$76,106.00
001000	VACANT COM (MKT)	3.81 AC	1.00/1.00/0.25/1.00	$16,874.80	$64,293.00

Columbia County Property Appraiser DB Last Updated: 11/4/2010

<< Prev 2 of 6 Next >>

DISCLAIMER

This information was derived from data which was compiled by the Columbia County Property Appraiser Office solely for the governmental purpose of property assessment. This information should not be relied upon by anyone as a determination of the ownership of property or market value. No warranties, expressed or implied, are provided for the accuracy of the data herein, it's use, or it's interpretation. Although it is periodically updated, this information may not reflect the data currently on file in the Property Appraiser's office. The assessed values are NOT certified values and therefore are subject to change before being finalized for ad valorem assessment purposes.

COLUMBIA COUNTY BUILDING DEPARTMENT
RESIDENTIAL CHECK LIST REQUIRMENTS

MINIMUM PLAN REQUIREMENTS FOR THE FLORIDA BUILDING CODE RESIDENTIAL 2007 ONE (1) AND TWO (2) FAMILY DWELLINGS

ALL REQUIREMENTS ARE SUBJECT TO CHANGE

ALL BUILDING PLANS MUST INDICATE COMPLIANCE with the Current 2007 FLORIDA BUILDING CODES RESIDENTIAL. ALL PLANS OR DRAWINGS SHALL PROVIDE CALCULATIONS AND DETAILS THAT HAVE THE SEAL AND SIGNATURE OF A CERTIFIED ARCHITECT OR ENGINEER REGISTERED IN THE STATE OF FLORIDA, OR ALTERNATE METHODOLOGIES, APPROVED BY THE STATE OF FLORIDA BUILDING COMMISSION FOR ONE-AND-TWO FAMILY DWELLINGS.

FOR DESIGN PURPOSES THE FOLLOWING BASIC WIND SPEEDS ARE PER FIGURE R301.2(4) of the FLORIDA BUILDING CODES RESIDENTIAL (Florida Wind speed map) **SHALL BE USED.**

WIND SPEED LINE SHALL BE DEFINED AS FOLLOWS: THE CENTERLINE OF INTERSTATE 75.

ALL BUILDINGS CONSTRUCTED EAST OF SAID LINE SHALL BE -------- 100 MPH
ALL BUILDINGS CONSTRUCTED WEST OF SAID LINE SHALL BE --------110 MPH
NO AREA IN COLUMBIA COUNTY IS IN A WIND BORNE DEBRIS REGION

	GENERAL REQUIREMENTS: **APPLICANT – PLEASE CHECK ALL APPLICABLE BOXES BEFORE SUBMITTAL**			**Items to Include- Each Box shall be Circled as Applicable**		
				Yes	**No**	**N/A**
1	Two (2) complete sets of plans containing the following:			✓		
2	All drawings must be clear, concise, drawn to scale, details that are not used shall be marked void			✓		
3	Condition space (Sq. Ft.) N/A		Total (Sq. Ft.) under roof 1058	IIIIIIII	IIIIIIII	IIIII

Designers name and signature shall be on all documents and a licensed architect or engineer, signature and official embossed seal shall be affixed to the plans and documents as per the FLORIDA BUILDING CODES RESIDENTIAL R101.2.1

Site Plan information including:

4	Dimensions of lot or parcel of land	✓		
5	Dimensions of all building set backs	✓		
6	Location of all other structures (include square footage of structures) on parcel, existing or proposed well and septic tank and all utility easements.	✓		
7	Provide a full legal description of property.	✓		

Wind-load Engineering Summary, calculations and any details required

	GENERAL REQUIREMENTS: APPLICANT – PLEASE CHECK ALL APPLICABLE BOXES BEFORE SUBMITTAL	Items to Include- Each Box shall be Circled as Applicable		
8	Plans or specifications must show compliance with FBCR Chapter 3	IIIIII	IIIII	IIIIII
		YES	NO	N/A
9	Basic wind speed (3-second gust), miles per hour	✓		
10	(Wind exposure – if more than one wind exposure is used, the wind exposure and applicable wind direction shall be indicated)	✓		
11	Wind importance factor and nature of occupancy	✓		
12	The applicable internal pressure coefficient, Components and Cladding	✓		
13	The design wind pressure in terms of psf (kN/m²), to be used for the design of exterior component, cladding materials not specifally designed by the registered design professional.	✓		

Elevations Drawing including:

14	All side views of the structure	✓		
15	Roof pitch	✓		
16	Overhang dimensions and detail with attic ventilation	✓		
17	Location, size and height above roof of chimneys	✓		
18	Location and size of skylights with Florida Product Approval	✓		
18	Number of stories	✓		
20A	Building height from the established grade to the roofs highest peak	✓		

Floor Plan including:

20	Dimensioned area plan showing rooms, attached garage, breeze ways, covered porches, deck, balconies	✓		
21	Raised floor surfaces located more than 30 inches above the floor or grade	✓		
22	All exterior and interior shear walls indicated	✓		
23	Shear wall opening shown (Windows, Doors and Garage doors)	✓		
24	Emergency escape and rescue opening shown in each bedroom (net clear opening shown)	✓		
25	Safety glazing of glass where needed			
26	Fireplaces types (gas appliance) (vented or non-vented) or wood burning with Hearth (see chapter 10 of FBCR)			
27	Stairs with dimensions (width, tread and riser and total run) details of guardrails, Handrails (see FBCR SECTION 311)			
28	Identify accessibility of bathroom (see FBCR SECTION 322)			

All materials placed within opening or onto/into exterior walls, soffits or roofs shall have Florida product approval number and mfg. installation information submitted with the plan (see Florida product approval form)

GENERAL REQUIREMENTS: APPLICANT – PLEASE CHECK ALL APPLICABLE BOXES BEFORE SUBMITTAL	Items to Include- Each Box shall be Circled as Applicable

FBCR 403: Foundation Plans

		YES	NO	N/A
29	Location of all load-bearing walls footings indicated as standard, monolithic, dimensions, size and type of reinforcing.	✓		
30	All posts and/or column footing including size and reinforcing			
31	Any special support required by soil analysis such as piling.			
32	Assumed load-bearing valve of soil_____ Pound Per Square Foot	✓		
33	Location of horizontal and vertical steel, for foundation or walls (include # size and type)	✓		

FBCR 506: CONCRETE SLAB ON GRADE

34	Show Vapor retarder (6mil. Polyethylene with joints lapped 6 inches and sealed)	✓		
35	Show control joints, synthetic fiber reinforcement or welded fire fabric reinforcement and Supports	✓		

FBCR 320: PROTECTION AGAINST TERMITES

36	Indicate on the foundation plan if soil treatment is used for subterranean termite prevention or submit other approved termite protection methods. **Protection shall be provided by registered termiticides**	✓		

FBCR 606: Masonry Walls and Stem walls (load bearing & shear Walls)

37	Show all materials making up walls, wall height, and Block size, mortar type	✓		
38	Show all Lintel sizes, type, spans and tie-beam sizes and spacing of reinforcement	✓		

Metal frame shear wall and roof systems shall be designed, signed and sealed by Florida Prof. Engineer or Architect

Floor Framing System: First and/or second story

39	Floor truss package shall including layout and details, signed and sealed by Florida Registered Professional Engineer			
40	Show conventional floor joist type, size, span, spacing and attachment to load bearing walls, stem walls and/or priers			
41	Girder type, size and spacing to load bearing walls, stem wall and/or priers			
42	Attachment of joist to girder			
43	Wind load requirements where applicable			
44	Show required under-floor crawl space			
45	Show required amount of ventilation opening for under-floor spaces			
46	Show required covering of ventilation opening			
47	Show the required access opening to access to under-floor spaces			
	Show the sub-floor structural panel sheathing type, thickness and fastener schedule on the edges &			

48	intermediate of the areas structural panel sheathing			
49	Show Draftstopping, Fire caulking and Fire blocking			
50	Show fireproofing requirements for garages attached to living spaces, per FBCR section 309			
51	Provide live and dead load rating of floor framing systems (psf).			

FBCR CHAPTER 6 WOOD WALL FRAMING CONSTRUCTION

	GENERAL REQUIREMENTS: APPLICANT – PLEASE CHECK ALL APPLICABLE BOXES BEFORE SUBMITTAL	Items to Include- Each Box shall be Circled as Applicable		
		YES	NO	N/A
52	Stud type, grade, size, wall height and oc spacing for all load bearing or shear walls	✓		
53	Fastener schedule for structural members per table FBCR 602.3 are to be shown	✓		
54	Show Wood structural panel's sheathing attachment to studs, joist, trusses, rafters and structural members, showing fastener schedule attachment on the edges & intermediate of the areas structural panel sheathing	✓		
55	Show all required connectors with a max uplift rating and required number of connectors and oc spacing for continuous connection of structural walls to foundation and roof trusses or rafter systems	✓		
56	Show sizes, type, span lengths and required number of support jack studs, king studs for shear wall opening and girder or header per FBCR Table 502.5 (1)	✓		
57	Indicate where pressure treated wood will be placed	✓		
58	Show all wall structural panel sheathing, grade, thickness and show fastener schedule for structural panel sheathing edges & intermediate areas	✓		
59	A detail showing gable truss bracing, wall balloon framing details or/ and wall hinge bracing detail	✓		

FBCR :ROOF SYSTEMS:

60	Truss design drawing shall meet section FBCR 802.10 Wood trusses	✓		
61	Include a layout and truss details, signed and sealed by Florida Professional Engineer	✓		
62	Show types of connector's assemblies' and resistance uplift rating for all trusses and rafters	✓		
63	Show gable ends with rake beams showing reinforcement or gable truss and wall bracing details			
64	Provide dead load rating of trusses	✓		

FBCR 802:Conventional Roof Framing Layout

65	Rafter and ridge beams sizes, span, species and spacing			
66	Connectors to wall assemblies' include assemblies' resistance to uplift rating			
67	Valley framing and support details			
68	Provide dead load rating of rafter system			

FBCR Table 602,3(2) & FBCR 803 ROOF SHEATHING

69	Include all materials which will make up the roof decking, identification of structural panel sheathing, grade, thickness	✓		
70	Show fastener Size and schedule for structural panel sheathing on the edges & intermediate areas	✓		

FBCR ROOF ASSEMBLIES FRC Chapter 9

71	Include all materials which will make up the roof assembles covering	✓		
72	Submit Florida Product Approval numbers for each component of the roof assembles covering	✓		

FBCR Chapter 11 Energy Efficiency Code for residential building

Residential construction shall comply with this code by using the following compliance methods in the FBCR chapter11 Residential buildings compliance methods. *Two of the required forms are to be submitted, showing dimensions condition area equal to the total condition living space area*

	GENERAL REQUIREMENTS: APPLICANT – PLEASE CHECK ALL APPLICABLE BOXES BEFORE SUBMITTAL	Items to Include- Each Box shall be Circled as Applicable		
		YES	NO	N/A
73	Show the insulation R value for the following areas of the structure			
74	Attic space			
75	Exterior wall cavity			
76	Crawl space			

HVAC information

77	Submit two copies of a Manual J sizing equipment or equivalent computation study			
78	Exhaust fans locations in bathrooms			
79	Show clothes dryer route and total run of exhaust duct			

Plumbing Fixture layout shown

80	All fixtures waste water lines shall be shown on the foundation plan			
81	Show the location of water heater			

Private Potable Water

82	Pump motor horse power			
83	Reservoir pressure tank gallon capacity Existing			
84	Rating of cycle stop valve if used			

Electrical layout shown including

85	Switches, outlets/receptacles, lighting and all required GFCI outlets identified	✓		
86	Ceiling fans			
87	Smoke detectors & Carbon dioxide detectors			
88	Service panel, sub-panel, location(s) and total ampere ratings	✓		
89	On the electrical plans identify the electrical service overcurrent protection device for the main electrical service. This device shall be installed on the exterior of structures to serve as a disconnecting means for the utility company electrical service. Conductors used from the exterior disconnecting means to a panel or sub panel shall have four-wire conductors, of which one conductor shall be used as an equipment ground. Indicate if the utility company service entrance cable will be of the overhead or underground type.	✓		

90	Appliances and HVAC equipment and disconnects			
91	Arc Fault Circuits (AFCI) in bedrooms	✓		

Disclosure Statement for Owner Builders *If you as the applicant will be acting as an owner builder under section 489.103(7) of the Florida Statutes, submit the required owner builder disclosure statement form.*

Notice Of Commencement

A notice of commencement form **recorded** in the Columbia County Clerk Office is required to be filed with the building department Before Any Inspections can be preformed.

GENERAL REQUIREMENTS: APPLICANT – PLEASE CHECK ALL APPLICABLE BOXES BEFORE SUBMITTAL	Items to Include- Each Box shall be Circled as Applicable

THE FOLLOWING ITEMS MUST BE SUBMITTED WITH BUILDING PLANS

		YES	NO	N/A
92	**Building Permit Application** A current Building Permit Application form is to be completed and submitted for all residential projects			
93	**Parcel Number** The parcel number (Tax ID number) from the Property Appraiser (386) 758-1084 is required. A copy of property deed is also requested			
94	**Environmental Health Permit or Sewer Tap Approval** A copy of a approved Columbia County Environmental Health (386) 758-1058			
95	**City of Lake City** A permit showing an approved waste water sewer tap			
96	**Toilet facilities shall be provided for all construction sites**			
97	**Town of Fort White** (386) 497-2321 If the parcel in the application for building permit is within the Corporate city limits of Fort White an approval land use development letter issued by the Town of Fort is required to be submitted with the application for a building permit.			
98	**Flood Information:** All projects within the Floodway of the Suwannee or Santa Fe Rivers shall require permitting through the Suwannee River Water Management District, before submitting a application to this office. Any project located within a flood zone where the base flood elevation (100 year flood) has been established shall meet the requirements of Section 8.5.2 of the Columbia County Land Development Regulations. Any project located within a flood zone where the base flood elevation has not been established (Zone A) shall meet the requirements of Section 8.5.3 of the Columbia County Land Development Regulations			
99	CERTIFIED FINISHED FLOOR ELEVATIONS will be required on any project where the base flood elevation (100 year flood) has been established			
100	A development permit will also be required. Development permit cost is **$50.00**			
101	**Driveway Connection:** If the property does not have an existing access to a public road, then an application for a culvert permit (**$25.00**) must be made. If the applicant feels that a culvert is not needed, they may apply for a culvert waiver (**$50.00**). All culvert waivers are sent to the Columbia County Public Works Department for approval or denial.			
102	**911 Address:** If the project is located in an area where a 911 address has not been issued, then application for a 911address must be applied for and **received** through the Columbia County Emergency Management Office of 911 Addressing Department (386) 758-1125			

Section R101.2.1 of the Florida Building Code Residential:

The provisions of Chapter 1, Florida Building Code, Building shall govern the administration and enforcement of the Florida Building Code, Residential.

Section 105 of the Florida Building Code defines the:

Time limitation of application.

An application for a permit for any proposed work shall be deemed to have been abandoned 180 days after the date of filing, unless such application has been pursued in good faith or a permit has been issued; except that the building official is authorized to grant one or more extensions of time for additional periods not exceeding 90 days each. The extension shall be requested in writing and justifiable cause demonstrated.

Single-family residential dwelling.

Section 105.3.4 A building permit for a single-family residential dwelling must be issued within 30 working days of application therefor unless unusual circumstances require a longer time for processing the applicati or unless the permit application fails to satisfy the Florida Building Code or the enforcing agency's laws or ordinances.

Permit intent.

Section 105.4.1: A permit issued shall be constructed to be a license to proceed with the work and not as authority to violate, cancel, alter or set aside any of the provisions of the technical codes, nor shall issuance c a permit prevent the building official from thereafter requiring a correction of errors in plans, construction or violations of this code. Every permit issued shall become invalid unless the work authorized by such permit is commenced within six months after its issuance, or if the work authorized by such permit is suspended or abandoned for a period of six months after the time the work is commenced.

If work has commenced.

Section 105.4.1.1: If work has commenced and the permit is revoked, becomes null and void, or expires because of lack of progress or abandonment, a new permit covering the proposed construction shall be obtained before proceeding with the work.

New Permit.

Section 105.4.1.2: If a new permit is not obtained within 180 days from the date the initial permit became nu and void, the building official is authorized to require that any work which has been commenced or completed be removed from the building site. Alternately, a new permit may be issued on application, providing the work in place and required to complete the structure meets all applicable regulations in effect at the time the initial permit became null and void and any regulations which may have become effective between the date of expiration and the date if issuance of the new permit.

Work Shall Be:

Section 105.4.1.3: Work shall be considered to be in active progress when the permit has received an approved inspection within 180 days. This provision shall not be applicable in case of civil commotion or strike or when the building work is halted due directly to judicial injunction, order or similar process.

The Fee:

Section 105.4.1.4: The fee for renewal reissuance and extension of a permit shall be set forth by the administrative authority.

When the submitted application is approved for permitting the applican will be notified by phone as to the date and time a building permit will b prepared and issued by the Columbia County Building & Zoning Department

ITW Building Components Group, Inc.

1950 Marley Drive Haines City, FL 33844
Florida Engineering Certificate of Authorization Number: 0 278
Florida Certificate of Product Approval # FL1999
 Document ID:1U1X8228Z0119102141

Truss Fabricator:	Anderson Truss Company
Job Identification:	10-118--Fill in later STEVE GLENN -- , **
Truss Count:	13
Model Code:	Florida Building Code 2007 and 2009 Supplement
Truss Criteria:	FBC2007Res/TPI-2002(STD)
Engineering Software:	Alpine Software,Version 9.05.
Structural Engineer of Record:	The identity of the structural EOR did not exist as of
Address:	the seal date per section 61G15-31.003(5a) of the FAC
Minimum Design Loads:	Roof - 40.0 PSF @ 1.25 Duration
	Floor - N/A
	Wind - 110 MPH ASCE 7-05 -Closed

Seal Date: 05/19/2010

-Truss Design Engineer-
Doug Fleming
Florida License Number: 66648
1950 Marley Drive
Haines City, FL 33844

Notes:

1. Determination as to the suitability of these truss components for the structure is the responsibility of the building designer/engineer of record, as defined in ANSI/TPI 1
2. The drawing date shown on this index sheet must match the date shown on the individual truss component drawing.
3. As shown on attached drawings; the drawing number is preceded by: HCUSR8228

Details: BRCLBSUB-

#	Ref Description	Drawing#	Date
1	78004--H7A	10139005	05/19/10
2	78005--H7A1	10139012	05/19/10
3	78006--H9A	10139001	05/19/10
4	78007--H11A	10139002	05/19/10
5	78008--H13A	10139003	05/19/10
6	78009--A	10139004	05/19/10
7	78010--B	10139006	05/19/10
8	78011--EJ7	10139007	05/19/10
9	78012--CJ5	10139008	05/19/10
10	78013--HJ7	10139013	05/19/10
11	78014--CJ3	10139009	05/19/10
12	78015--CJ1	10139010	05/19/10
13	78016--EJ7G	10139011	05/19/10

COLUMBIA COUNTY BUILDING DEPARTMENT
Received for FILE COPY
Code Compliance
PLANS EXAMINER

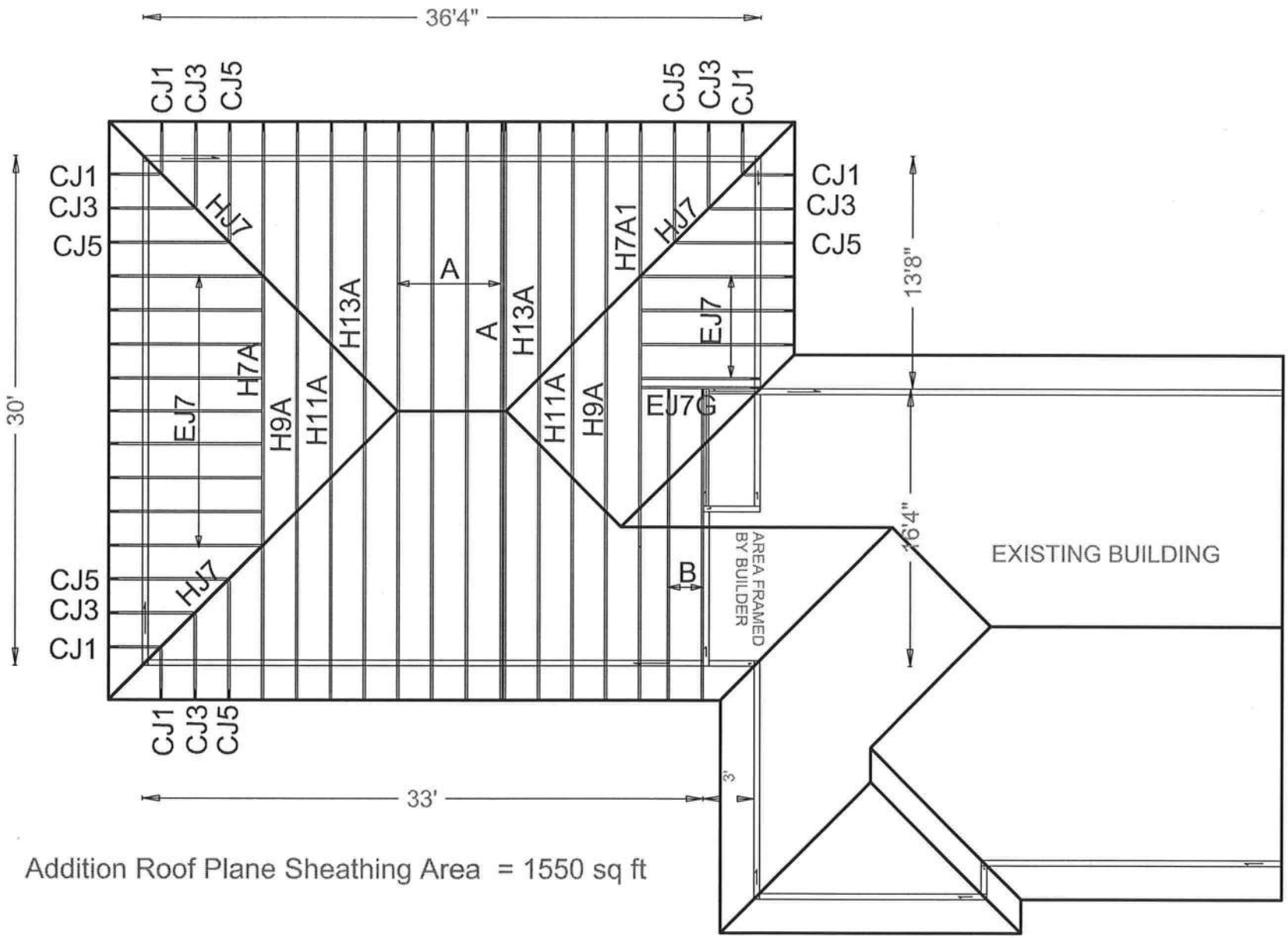

Addition Roof Plane Sheathing Area = 1550 sq ft

STEVE GLENN/ ADDITION

JOB DESCRIPTION:: Fill in later
/: STEVE GLENN

JOB NO:
10-118

PAGE NO:
1 OF 1

(10-118--Fill in later STEVE GLENN -- , ** - H7A)

Top chord 2x4 SP #2 Dense :T2 2x6 SP #2:
Bot chord 2x6 SP #2
Webs 2x4 SP #3

Roof overhang supports 2.00 psf soffit load.

In lieu of structural panels use purlins to brace all flat TC @ 24" OC.

Deflection meets L/240 live and L/180 total load.

110 mph wind, 15.00 ft mean hgt, ASCE 7-05, CLOSED bldg, Located anywhere in roof, CAT II, EXP C, wind TC DL=5.0 psf, wind BC DL=5.0 psf. Iw=1.00 GCpi(+/-)=0.18

Wind reactions based on MWFRS pressures.

#1 hip supports 7-0-0 jacks with no webs.

Left side jacks have 7-0-0 setback with 0-0-0 cant and 2-0-0 overhang. End jacks have 7-0-0 setback with 0-0-0 cant and 2-0-0 overhang. Right side jacks have 7-0-0 setback with 0-0-0 cant and 2-0-0 overhang.

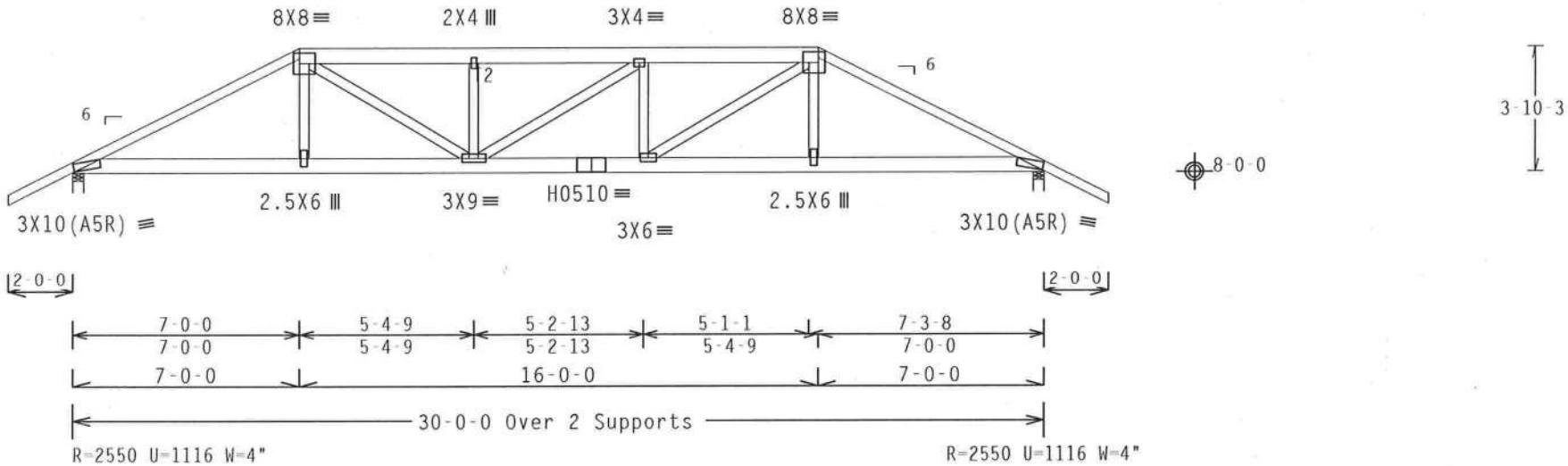

Design Crit: FBC2007Res/TPI-2002(STD)

PLT TYP. 20 Gauge HS,Wave FT/RT=10%(0%)/0(0) 9.05.03 QTY:1 FL/-/4/-/-/R/- Scale =.1875"/Ft.

ALPINE
ITW Building Components Group Inc.
Haines City, FL 33844
FL COA #0 278

WARNING TRUSSES REQUIRE EXTREME CARE IN FABRICATION, HANDLING, SHIPPING, INSTALLING AND BRACING. REFER TO BCSI (BUILDING COMPONENT SAFETY INFORMATION), PUBLISHED BY TPI (TRUSS PLATE INSTITUTE, 218 NORTH LEE STREET, SUITE 312, ALEXANDRIA, VA, 22314) AND WTCA (WOOD TRUSS COUNCIL OF AMERICA, 6300 ENTERPRISE LANE, MADISON, WI 53719) FOR SAFETY PRACTICES PRIOR TO PERFORMING THESE FUNCTIONS. UNLESS OTHERWISE INDICATED TOP CHORD SHALL HAVE PROPERLY ATTACHED STRUCTURAL PANELS AND BOTTOM CHORD SHALL HAVE A PROPERLY ATTACHED RIGID CEILING.

IMPORTANTFURNISH A COPY OF THIS DESIGN TO THE INSTALLATION CONTRACTOR. ITW BCG, INC. SHALL NOT BE RESPONSIBLE FOR ANY DEVIATION FROM THIS DESIGN; ANY FAILURE TO BUILD THE TRUSS IN COMFORMANCE WITH TPI; OR FABRICATING, HANDLING, SHIPPING, INSTALLING & BRACING OF TRUSSES.
DESIGN CONFORMS WITH APPLICABLE PROVISIONS OF NDS (NATIONAL DESIGN SPEC. BY AF&PA) AND TPI. ITW BCG CONNECTOR PLATES ARE MADE OF 20/18/16GA (W,H/SS/K) ASTM A653 GRADE 40/60 (W, K/H,SS) GALV. STEEL. APPLY PLATES TO EACH FACE OF TRUSS AND, UNLESS OTHERWISE LOCATED ON THIS DESIGN, POSITION PER DRAWINGS 160A-Z. ANY INSPECTION OF PLATES FOLLOWED BY (I) SHALL BE PER ANNEX A3 OF TPI1-2002 SEC.3. A SEAL ON THIS DRAWING INDICATES ACCEPTANCE OF PROFESSIONAL ENGINEERING RESPONSIBILITY SOLELY FOR THE TRUSS COMPONENT DESIGN SHOWN. THE SUITABILITY AND USE OF THIS COMPONENT FOR ANY BUILDING IS THE RESPONSIBILITY OF THE BUILDING DESIGNER PER ANSI/TPI 1 SEC. 2.

DOUGLAS FLEMING LICENSE No. 66648 STATE OF FLORIDA PROFESSIONAL ENGINEER
May 19 '10

TC LL	20.0 PSF	REF	R8228- 78004
TC DL	10.0 PSF	DATE	05/19/10
BC DL	10.0 PSF	DRW	HCUSR8228 10139005
BC LL	0.0 PSF	HC-ENG	DF/DF
TOT.LD.	40.0 PSF	SEQN-	114199
DUR.FAC.	1.25		
SPACING	24.0"	JREF-	1U1X8228Z01

(10-118--Fill in later STEVE GLENN -- , ** - H7A1)

Top chord 2x4 SP #2 Dense :T2 2x6 SP #2:
Bot chord 2x6 SP #1 Dense
Webs 2x4 SP #3

(**) 3 plate(s) require special positioning. Refer to scaled plate plot details for special positioning requirements.

110 mph wind, 15.00 ft mean hgt, ASCE 7-05, CLOSED bldg, Located anywhere in roof, CAT II, EXP C, wind TC DL=5.0 psf, wind BC DL=5.0 psf. Iw=1.00 GCpi(+/-)=0.18

Wind reactions based on MWFRS pressures.

Roof overhang supports 2.00 psf soffit load.

In lieu of structural panels use purlins to brace all flat TC @ 24" OC.

Special loads
------(Lumber Dur.Fac.=1.25 / Plate Dur.Fac.=1.25)

TC-	From	62 plf at	-2.00	to	62 plf at	7.00
TC-	From	31 plf at	7.00	to	31 plf at	13.60
TC-	From	62 plf at	13.60	to	62 plf at	23.00
TC-	From	62 plf at	23.00	to	62 plf at	32.00
BC-	From	4 plf at	-2.00	to	4 plf at	0.00
BC-	From	20 plf at	0.00	to	20 plf at	7.03
BC-	From	10 plf at	7.03	to	10 plf at	13.60
BC-	From	20 plf at	13.60	to	20 plf at	30.00
BC-	From	4 plf at	30.00	to	4 plf at	32.00

TC- 434.03 lb Conc. Load at 7.03
TC- 182.44 lb Conc. Load at 9.06,11.06,13.06
BC- 480.11 lb Conc. Load at 7.03
BC- 126.90 lb Conc. Load at 9.06,11.06,13.06
BC- 1076.78 lb Conc. Load at 13.60

Deflection meets L/240 live and L/180 total load.

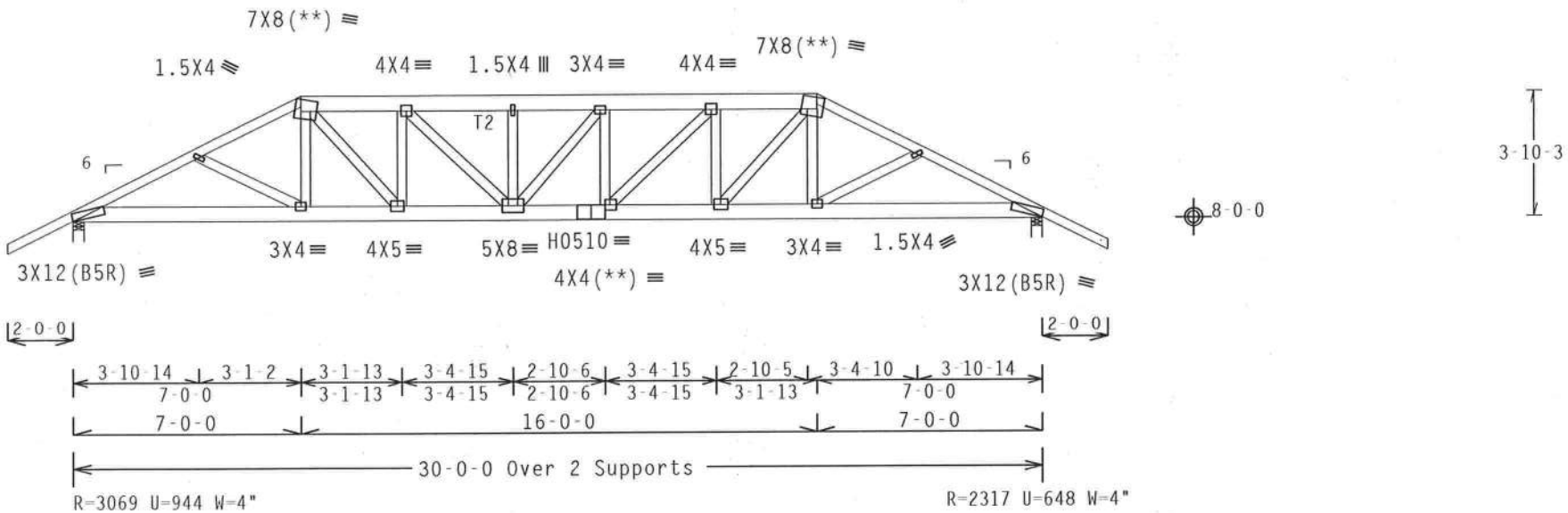

Design Crit: FBC2007Res/TPI-2002(STD)

PLT TYP. 20 Gauge HS,Wave FT/RT=10%(0%)/0(0) 9.05.03 QTY:1 FL/-/4/-/-/R/- Scale =.1875"/Ft.

ALPINE
ITW Building Components Group Inc.
Haines City, FL 33844
FL COA #0 278

WARNING TRUSSES REQUIRE EXTREME CARE IN FABRICATION, HANDLING, SHIPPING, INSTALLING AND BRACING. REFER TO BCSI (BUILDING COMPONENT SAFETY INFORMATION), PUBLISHED BY TPI (TRUSS PLATE INSTITUTE, 218 NORTH LEE STREET, SUITE 312, ALEXANDRIA, VA, 22314) AND WTCA (WOOD TRUSS COUNCIL OF AMERICA, 6300 ENTERPRISE LANE, MADISON, WI 53719) FOR SAFETY PRACTICES PRIOR TO PERFORMING THESE FUNCTIONS. UNLESS OTHERWISE INDICATED TOP CHORD SHALL HAVE PROPERLY ATTACHED STRUCTURAL PANELS AND BOTTOM CHORD SHALL HAVE A PROPERLY ATTACHED RIGID CEILING.

IMPORTANT FURNISH A COPY OF THIS DESIGN TO THE INSTALLATION CONTRACTOR. ITW BCG, INC. SHALL NOT BE RESPONSIBLE FOR ANY DEVIATION FROM THIS DESIGN; ANY FAILURE TO BUILD THE TRUSS IN CONFORMANCE WITH TPI; OR FABRICATING, HANDLING, SHIPPING, INSTALLING & BRACING OF TRUSSES.
DESIGN CONFORMS WITH APPLICABLE PROVISIONS OF NDS (NATIONAL DESIGN SPEC, BY AF&PA) AND TPI. ITW BCG CONNECTOR PLATES ARE MADE OF 20/18/16GA (W,H/SS/K) ASTM A653 GRADE 40/60 (W, K/H,SS) GALV. STEEL. APPLY PLATES TO EACH FACE OF TRUSS AND, UNLESS OTHERWISE LOCATED ON THIS DESIGN, POSITION PER DRAWINGS 160A-Z. ANY INSPECTION OF PLATES FOLLOWED BY (1) SHALL BE PER ANNEX A3 OF TPI1-2002 SEC.3. A SEAL ON THIS DRAWING INDICATES ACCEPTANCE OF PROFESSIONAL ENGINEERING RESPONSIBILITY SOLELY FOR THE TRUSS COMPONENT DESIGN SHOWN. THE SUITABILITY AND USE OF THIS COMPONENT FOR ANY BUILDING IS THE RESPONSIBILITY OF THE BUILDING DESIGNER PER ANSI/TPI 1 SEC. 2.

DOUGLAS FLEMING LICENSE No. 66648 STATE OF FLORIDA PROFESSIONAL ENGINEER
May 19 '10

TC LL	20.0 PSF	REF R8228- 78005
TC DL	10.0 PSF	DATE 05/19/10
BC DL	10.0 PSF	DRW HCUSR8228 10139012
BC LL	0.0 PSF	HC-ENG DF/DF
TOT.LD.	40.0 PSF	SEQN- 114271
DUR.FAC.	1.25	
SPACING	24.0"	JREF- 1U1X8228Z01

(10-118--Fill in later STEVE GLENN -- , ** - H9A)

Top chord 2x4 SP #2 Dense
Bot chord 2x4 SP #2 Dense
Webs 2x4 SP #3

Roof overhang supports 2.00 psf soffit load.

In lieu of structural panels use purlins to brace all flat TC @ 24" OC.

MWFRS loads based on trusses located at least 7.50 ft. from roof edge.

110 mph wind, 15.00 ft mean hgt, ASCE 7-05, CLOSED bldg, not located within 4.50 ft from roof edge, CAT II, EXP C, wind TC DL=5.0 psf, wind BC DL=5.0 psf. Iw=1.00 GCpi(+/-)=0.18

Wind reactions based on MWFRS pressures.

Bottom chord checked for 10.00 psf non-concurrent live load.

Deflection meets L/240 live and L/180 total load.

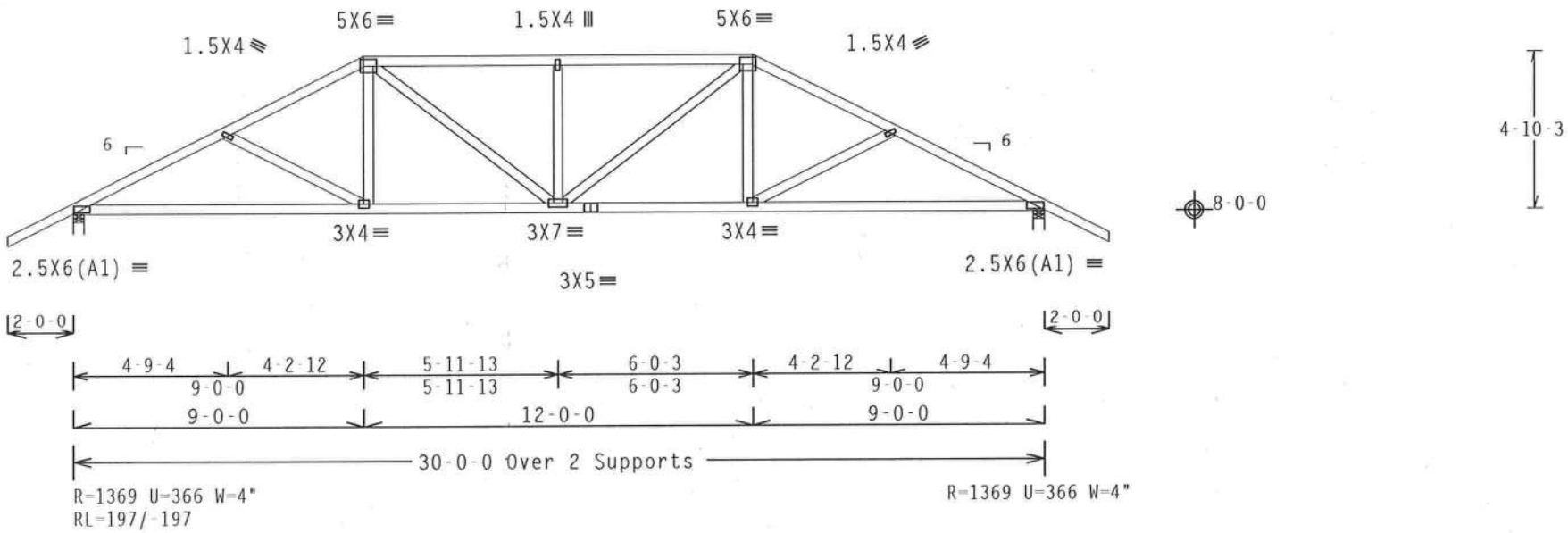

Design Crit: FBC2007Res/TPI-2002(STD)

PLT TYP. Wave | FT/RT=10%(0%)/0(0) | 9.05.03 | QTY:2 | FL/-/4/-/-/R/- | Scale =.1875"/Ft.

ALPINE
ITW Building Components Group Inc.
Haines City, FL 33844
FL COA #0 278

WARNING TRUSSES REQUIRE EXTREME CARE IN FABRICATION, HANDLING, SHIPPING, INSTALLING AND BRACING. REFER TO BCSI (BUILDING COMPONENT SAFETY INFORMATION), PUBLISHED BY TPI (TRUSS PLATE INSTITUTE, 218 NORTH LEE STREET, SUITE 312, ALEXANDRIA, VA, 22314) AND WTCA (WOOD TRUSS COUNCIL OF AMERICA, 6300 ENTERPRISE LANE, MADISON, WI 53719) FOR SAFETY PRACTICES PRIOR TO PERFORMING THESE FUNCTIONS. UNLESS OTHERWISE INDICATED TOP CHORD SHALL HAVE PROPERLY ATTACHED STRUCTURAL PANELS AND BOTTOM CHORD SHALL HAVE A PROPERLY ATTACHED RIGID CEILING.

IMPORTANT FURNISH A COPY OF THIS DESIGN TO THE INSTALLATION CONTRACTOR. ITW BCG, INC. SHALL NOT BE RESPONSIBLE FOR ANY DEVIATION FROM THIS DESIGN; ANY FAILURE TO BUILD THE TRUSS IN CONFORMANCE WITH TPI; OR FABRICATING, HANDLING, SHIPPING, INSTALLING & BRACING OF TRUSSES. DESIGN CONFORMS WITH APPLICABLE PROVISIONS OF NDS (NATIONAL DESIGN SPEC. BY AF&PA) AND TPI. ITW BCG CONNECTOR PLATES ARE MADE OF 20/18/16GA (W,H/SS/K) ASTM A653 GRADE 40/60 (W, K/H,SS) GALV. STEEL. APPLY PLATES TO EACH FACE OF TRUSS AND, UNLESS OTHERWISE LOCATED ON THIS DESIGN, POSITION PER DRAWINGS 160A-Z. ANY INSPECTION OF PLATES FOLLOWED BY (1) SHALL BE PER ANNEX A3 OF TPI1-2002 SEC.3. A SEAL ON THIS DRAWING INDICATES ACCEPTANCE OF PROFESSIONAL ENGINEERING RESPONSIBILITY SOLELY FOR THE TRUSS COMPONENT DESIGN SHOWN. THE SUITABILITY AND USE OF THIS COMPONENT FOR ANY BUILDING IS THE RESPONSIBILITY OF THE BUILDING DESIGNER PER ANSI/TPI 1 SEC. 2.

DOUGLAS FLEMING LICENSE No. 66648 STATE OF FLORIDA PROFESSIONAL ENGINEER

May 19 '10

TC LL	20.0 PSF	REF	R8228- 78006
TC DL	10.0 PSF	DATE	05/19/10
BC DL	10.0 PSF	DRW	HCUSR8228 10139001
BC LL	0.0 PSF	HC-ENG	DF/DF *
TOT.LD.	40.0 PSF	SEQN-	114209
DUR.FAC.	1.25		
SPACING	24.0"	JREF-	1U1X8228Z01

(10-118--Fill in later STEVE GLENN -- , ** - H11A)

Top chord 2x4 SP #2 Dense
Bot chord 2x4 SP #2 Dense
Webs 2x4 SP #3

Roof overhang supports 2.00 psf soffit load.

In lieu of structural panels use purlins to brace all flat TC @ 24" OC.

Bottom chord checked for 10.00 psf non-concurrent live load.

MWFRS loads based on trusses located at least 7.50 ft. from roof edge.

110 mph wind, 15.00 ft mean hgt, ASCE 7-05, CLOSED bldg, not located within 4.50 ft from roof edge, CAT II, EXP C, wind TC DL=5.0 psf, wind BC DL=5.0 psf. Iw=1.00 GCpi(+/-)=0.18

Wind reactions based on MWFRS pressures.

Truss passed check for 20 psf additional bottom chord live load in areas with 42"-high x 24"-wide clearance.

Deflection meets L/240 live and L/180 total load.

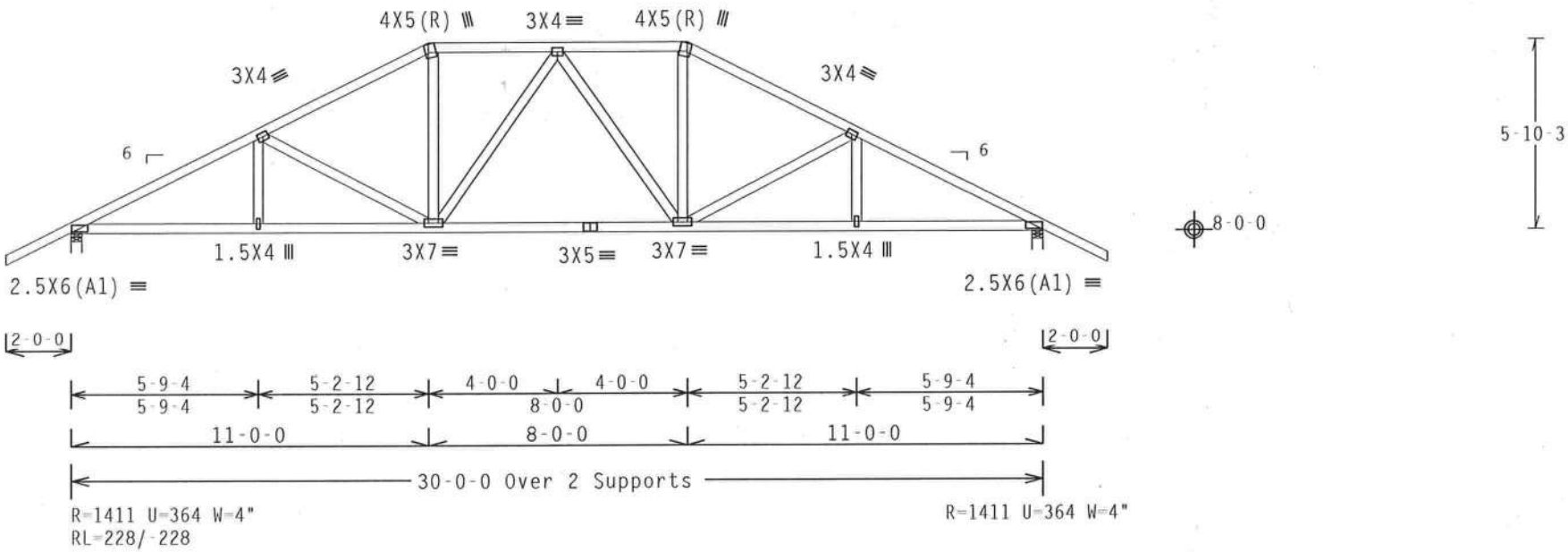

Design Crit: FBC2007Res/TPI-2002(STD)

PLT TYP. Wave | FT/RT=10%(0%)/0(0) | 9.05.03 | QTY:2 | FL/-/4/-/-/R/- | Scale =.1875"/Ft.

ALPINE
ITW Building Components Group Inc.
Haines City, FL 33844
FL COA #0 278

WARNING TRUSSES REQUIRE EXTREME CARE IN FABRICATION, HANDLING, SHIPPING, INSTALLING AND BRACING. REFER TO BCSI (BUILDING COMPONENT SAFETY INFORMATION), PUBLISHED BY TPI (TRUSS PLATE INSTITUTE, 218 NORTH LEE STREET, SUITE 312, ALEXANDRIA, VA, 22314) AND WTCA (WOOD TRUSS COUNCIL OF AMERICA, 6300 ENTERPRISE LANE, MADISON, WI 53719) FOR SAFETY PRACTICES PRIOR TO PERFORMING THESE FUNCTIONS. UNLESS OTHERWISE INDICATED TOP CHORD SHALL HAVE PROPERLY ATTACHED STRUCTURAL PANELS AND BOTTOM CHORD SHALL HAVE A PROPERLY ATTACHED RIGID CEILING.

IMPORTANT FURNISH A COPY OF THIS DESIGN TO THE INSTALLATION CONTRACTOR. ITW BCG, INC. SHALL NOT BE RESPONSIBLE FOR ANY DEVIATION FROM THIS DESIGN; ANY FAILURE TO BUILD THE TRUSS IN CONFORMANCE WITH TPI; OR FABRICATING, HANDLING, SHIPPING, INSTALLING & BRACING OF TRUSSES.
DESIGN CONFORMS WITH APPLICABLE PROVISIONS OF NDS (NATIONAL DESIGN SPEC. BY AF&PA) AND TPI. ITW BCG CONNECTOR PLATES ARE MADE OF 20/18/16GA (W,H/SS/K) ASTM A653 GRADE 40/60 (W, K/H,SS) GALV. STEEL. APPLY PLATES TO EACH FACE OF TRUSS AND, UNLESS OTHERWISE LOCATED ON THIS DESIGN, POSITION PER DRAWINGS 160A-Z. ANY INSPECTION OF PLATES FOLLOWED BY (I) SHALL BE PER ANNEX A3 OF TPI1-2002 SEC.3. A SEAL ON THIS DRAWING INDICATES ACCEPTANCE OF PROFESSIONAL ENGINEERING RESPONSIBILITY SOLELY FOR THE TRUSS COMPONENT DESIGN SHOWN. THE SUITABILITY AND USE OF THIS COMPONENT FOR ANY BUILDING IS THE RESPONSIBILITY OF THE BUILDING DESIGNER PER ANSI/TPI 1 SEC. 2.

DOUGLAS FLEMING LICENSE No. 66648 STATE OF FLORIDA PROFESSIONAL ENGINEER
May 19 '10

TC LL	20.0 PSF	REF	R8228- 78007
TC DL	10.0 PSF	DATE	05/19/10
BC DL	10.0 PSF	DRW	HCUSR8228 10139002
BC LL	0.0 PSF	HC-ENG	DF/DF *
TOT.LD.	40.0 PSF	SEQN-	114217
DUR.FAC.	1.25		
SPACING	24.0"	JREF-	1U1X8228Z01

(10-118--Fill in later STEVE GLENN -- , ** - H13A)

Top chord 2x4 SP #2 Dense
Bot chord 2x4 SP #2 Dense
Webs 2x4 SP #3

Roof overhang supports 2.00 psf soffit load.

In lieu of structural panels use purlins to brace all flat TC @ 24" OC.

Bottom chord checked for 10.00 psf non-concurrent live load.

MWFRS loads based on trusses located at least 15.00 ft. from roof edge.

110 mph wind, 15.00 ft mean hgt, ASCE 7-05, CLOSED bldg, not located within 4.50 ft from roof edge, CAT II, EXP C, wind TC DL=5.0 psf, wind BC DL=5.0 psf. Iw=1.00 GCpi(+/-)=0.18

Wind reactions based on MWFRS pressures.

Truss passed check for 20 psf additional bottom chord live load in areas with 42"-high x 24"-wide clearance.

Deflection meets L/240 live and L/180 total load.

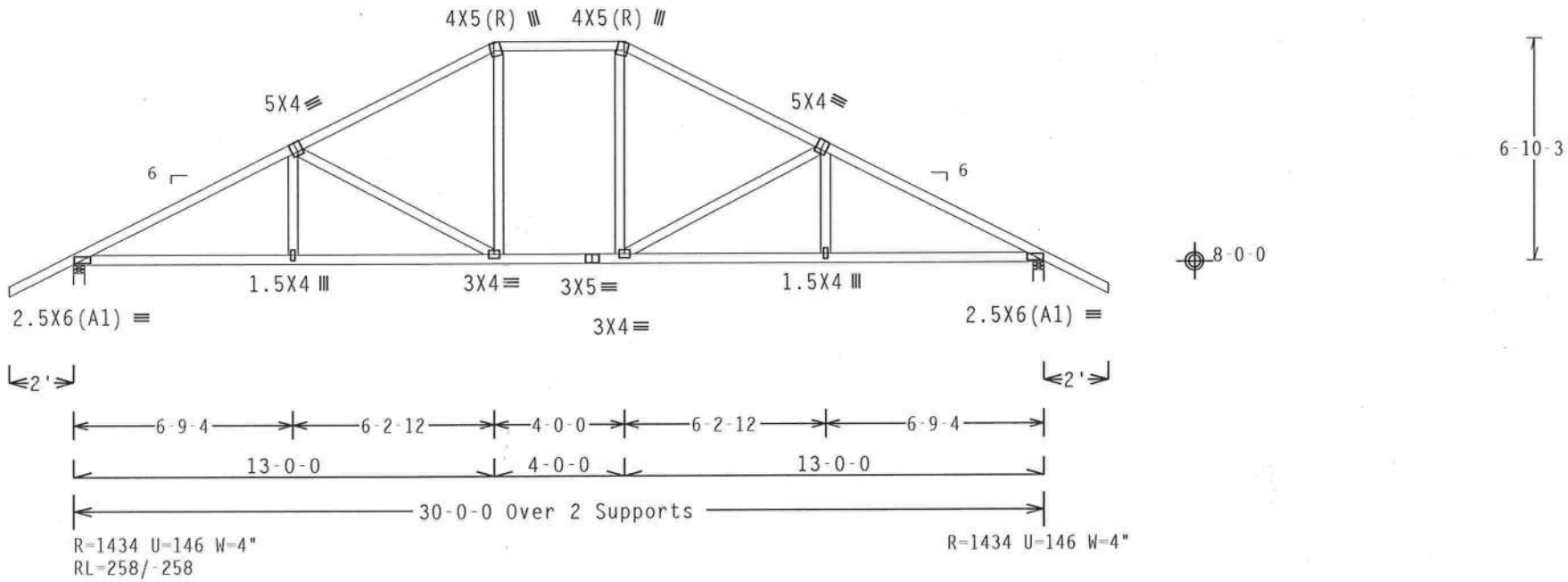

Design Crit: FBC2007Res/TPI-2002(STD)

PLT TYP. Wave | FT/RT=10%(0%)/0(0) | 9.05.03 | QTY:2 | FL/-/4/-/-/R/- | Scale =.1875"/Ft.

ALPINE
ITW Building Components Group Inc.
Haines City, FL 33844
FL COA #0 278

WARNING TRUSSES REQUIRE EXTREME CARE IN FABRICATION, HANDLING, SHIPPING, INSTALLING AND BRACING. REFER TO BCSI (BUILDING COMPONENT SAFETY INFORMATION), PUBLISHED BY TPI (TRUSS PLATE INSTITUTE, 218 NORTH LEE STREET, SUITE 312, ALEXANDRIA, VA, 22314) AND WTCA (WOOD TRUSS COUNCIL OF AMERICA, 6300 ENTERPRISE LANE, MADISON, WI 53719) FOR SAFETY PRACTICES PRIOR TO PERFORMING THESE FUNCTIONS. UNLESS OTHERWISE INDICATED TOP CHORD SHALL HAVE PROPERLY ATTACHED STRUCTURAL PANELS AND BOTTOM CHORD SHALL HAVE A PROPERLY ATTACHED RIGID CEILING.

IMPORTANTFURNISH A COPY OF THIS DESIGN TO THE INSTALLATION CONTRACTOR. ITW BCG, INC. SHALL NOT BE RESPONSIBLE FOR ANY DEVIATION FROM THIS DESIGN; ANY FAILURE TO BUILD THE TRUSS IN CONFORMANCE WITH TPI; OR FABRICATING, HANDLING, SHIPPING, INSTALLING & BRACING OF TRUSSES.
DESIGN CONFORMS WITH APPLICABLE PROVISIONS OF NDS (NATIONAL DESIGN SPEC. BY AF&PA) AND TPI. ITW BCG CONNECTOR PLATES ARE MADE OF 20/18/16GA (W,H/SS/K) ASTM A653 GRADE 40/60 (W, K/H,SS) GALV. STEEL. APPLY PLATES TO EACH FACE OF TRUSS AND, UNLESS OTHERWISE LOCATED ON THIS DESIGN, POSITION PER DRAWINGS 160A-2. ANY INSPECTION OF PLATES FOLLOWED BY (I) SHALL BE PER ANNEX A3 OF TPI1-2002 SEC.3. A SEAL ON THIS DRAWING INDICATES ACCEPTANCE OF PROFESSIONAL ENGINEERING RESPONSIBILITY SOLELY FOR THE TRUSS COMPONENT DESIGN SHOWN. THE SUITABILITY AND USE OF THIS COMPONENT FOR ANY BUILDING IS THE RESPONSIBILITY OF THE BUILDING DESIGNER PER ANSI/TPI 1 SEC. 2.

DOUGLAS FLEMING LICENSE No. 66648 STATE OF FLORIDA PROFESSIONAL ENGINEER
19 '10

TC LL	20.0 PSF	REF R8228- 78008
TC DL	10.0 PSF	DATE 05/19/10
BC DL	10.0 PSF	DRW HCUSR8228 10139003
BC LL	0.0 PSF	HC-ENG DF/DF *
TOT.LD.	40.0 PSF	SEQN- 114225
DUR.FAC.	1.25	
SPACING	24.0"	JREF- 1U1X8228Z01

(10-118--Fill in later STEVE GLENN -- , ** - A)

Top chord 2x4 SP #2 Dense
Bot chord 2x4 SP #2 Dense
Webs 2x4 SP #3

Roof overhang supports 2.00 psf soffit load.

(A) Continuous lateral bracing equally spaced on member.

Bottom chord checked for 10.00 psf non-concurrent live load.

MWFRS loads based on trusses located at least 15.00 ft. from roof edge.

110 mph wind, 15.00 ft mean hgt, ASCE 7-05, CLOSED bldg, not located within 4.50 ft from roof edge, CAT II, EXP C, wind TC DL=5.0 psf, wind BC DL=5.0 psf. Iw=1.00 GCpi(+/-)=0.18

Wind reactions based on MWFRS pressures.

Truss passed check for 20 psf additional bottom chord live load in areas with 42"-high x 24"-wide clearance.

Deflection meets L/240 live and L/180 total load.

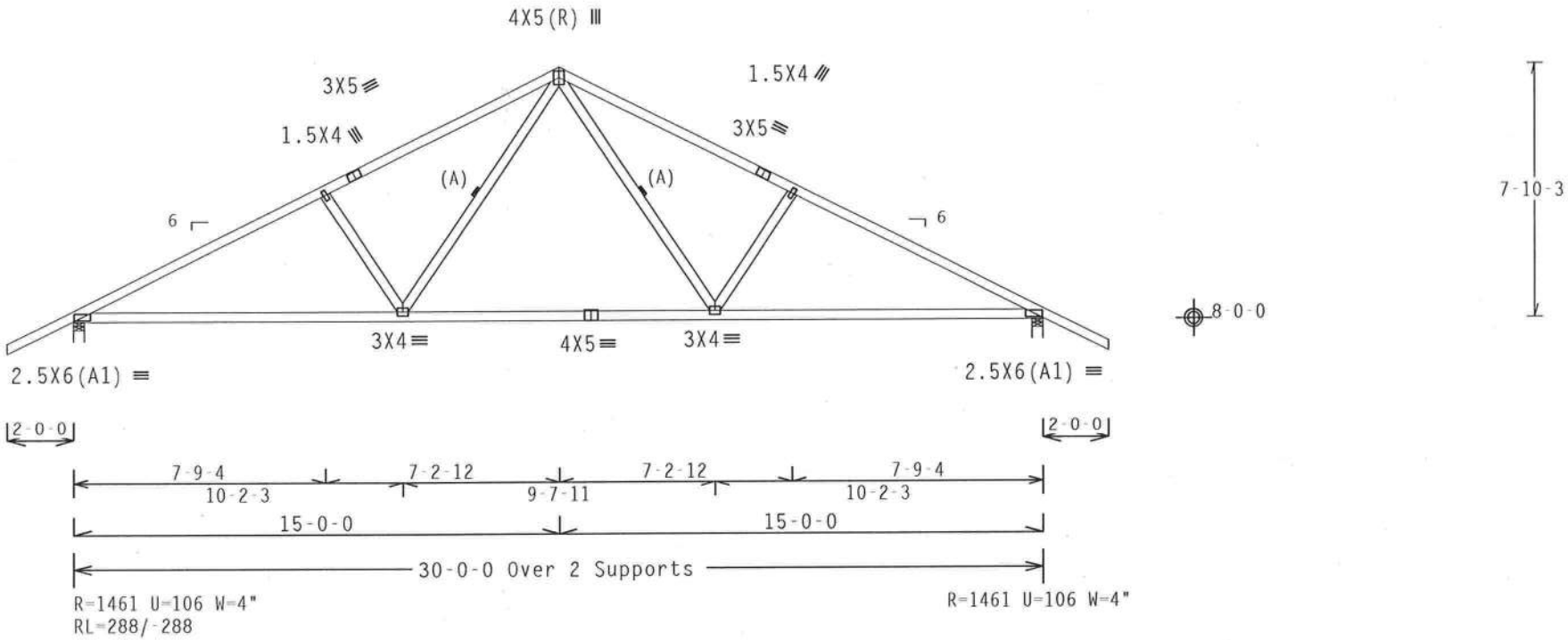

Design Crit: FBC2007Res/TPI-2002(STD)
FT/RT=10%(0%)/0(0)

PLT TYP. Wave | 9.05.0 | QTY:5 | FL/-/4/-/-/R/- | Scale =.1875"/Ft.

ALPINE
ITW Building Components Group Inc.
Haines City, FL 33844
FL COA #0 278

WARNING TRUSSES REQUIRE EXTREME CARE IN FABRICATION, HANDLING, SHIPPING, INSTALLING AND BRACING. REFER TO BCSI (BUILDING COMPONENT SAFETY INFORMATION), PUBLISHED BY TPI (TRUSS PLATE INSTITUTE, 218 NORTH LEE STREET, SUITE 312, ALEXANDRIA, VA, 22314) AND WTCA (WOOD TRUSS COUNCIL OF AMERICA, 6300 ENTERPRISE LANE, MADISON, WI 53719) FOR SAFETY PRACTICES PRIOR TO PERFORMING THESE FUNCTIONS. UNLESS OTHERWISE INDICATED TOP CHORD SHALL HAVE PROPERLY ATTACHED STRUCTURAL PANELS AND BOTTOM CHORD SHALL HAVE A PROPERLY ATTACHED RIGID CEILING.

IMPORTANTFURNISH A COPY OF THIS DESIGN TO THE INSTALLATION CONTRACTOR. ITW BCG, INC. SHALL NOT BE RESPONSIBLE FOR ANY DEVIATION FROM THIS DESIGN; ANY FAILURE TO BUILD THE TRUSS IN CONFORMANCE WITH TPI; OR FABRICATING, HANDLING, SHIPPING, INSTALLING & BRACING OF TRUSSES.
DESIGN CONFORMS WITH APPLICABLE PROVISIONS OF NDS (NATIONAL DESIGN SPEC. BY AF&PA) AND TPI. ITW BCG CONNECTOR PLATES ARE MADE OF 20/18/16GA (W,H/SS/K) ASTM A653 GRADE 40/60 (W, K/H,SS) GALV. STEEL. APPLY PLATES TO EACH FACE OF TRUSS AND, UNLESS OTHERWISE LOCATED ON THIS DESIGN, POSITION PER DRAWINGS 160A-2. ANY INSPECTION OF PLATES FOLLOWED BY (I) SHALL BE PER ANNEX A3 OF TPI1-2002 SEC.3. A SEAL ON THIS DRAWING INDICATES ACCEPTANCE OF PROFESSIONAL ENGINEERING RESPONSIBILITY SOLELY FOR THE TRUSS COMPONENT DESIGN SHOWN. THE SUITABILITY AND USE OF THIS COMPONENT FOR ANY BUILDING IS THE RESPONSIBILITY OF THE BUILDING DESIGNER PER ANSI/TPI 1 SEC. 2.

DOUGLAS FLEMING
LICENSE
No. 66648
STATE OF FLORIDA
PROFESSIONAL ENGINEER
May 19 '10

TC LL	20.0 PSF	REF	R8228- 78009
TC DL	10.0 PSF	DATE	05/19/10
BC DL	10.0 PSF	DRW	HCUSR8228 10139004
BC LL	0.0 PSF	HC-ENG	DF/DF *
TOT.LD.	40.0 PSF	SEQN-	114236
DUR.FAC.	1.25		
SPACING	24.0"	JREF-	1U1X8228Z01

(10-118--Fill in later STEVE GLENN -- , ** - B)

Top chord 2x4 SP #2 Dense
Bot chord 2x4 SP #2 Dense
Webs 2x4 SP #3

Roof overhang supports 2.00 psf soffit load.

Bottom chord checked for 10.00 psf non-concurrent live load.

MWFRS loads based on trusses located at least 30.00 ft. from roof edge.

110 mph wind, 15.00 ft mean hgt, ASCE 7-05, CLOSED bldg, not located within 4.50 ft from roof edge, CAT II, EXP C, wind TC DL=5.0 psf, wind BC DL=5.0 psf. Iw=1.00 GCpi(+/-)=0.18

Wind reactions based on MWFRS pressures.

Deflection meets L/240 live and L/180 total load.

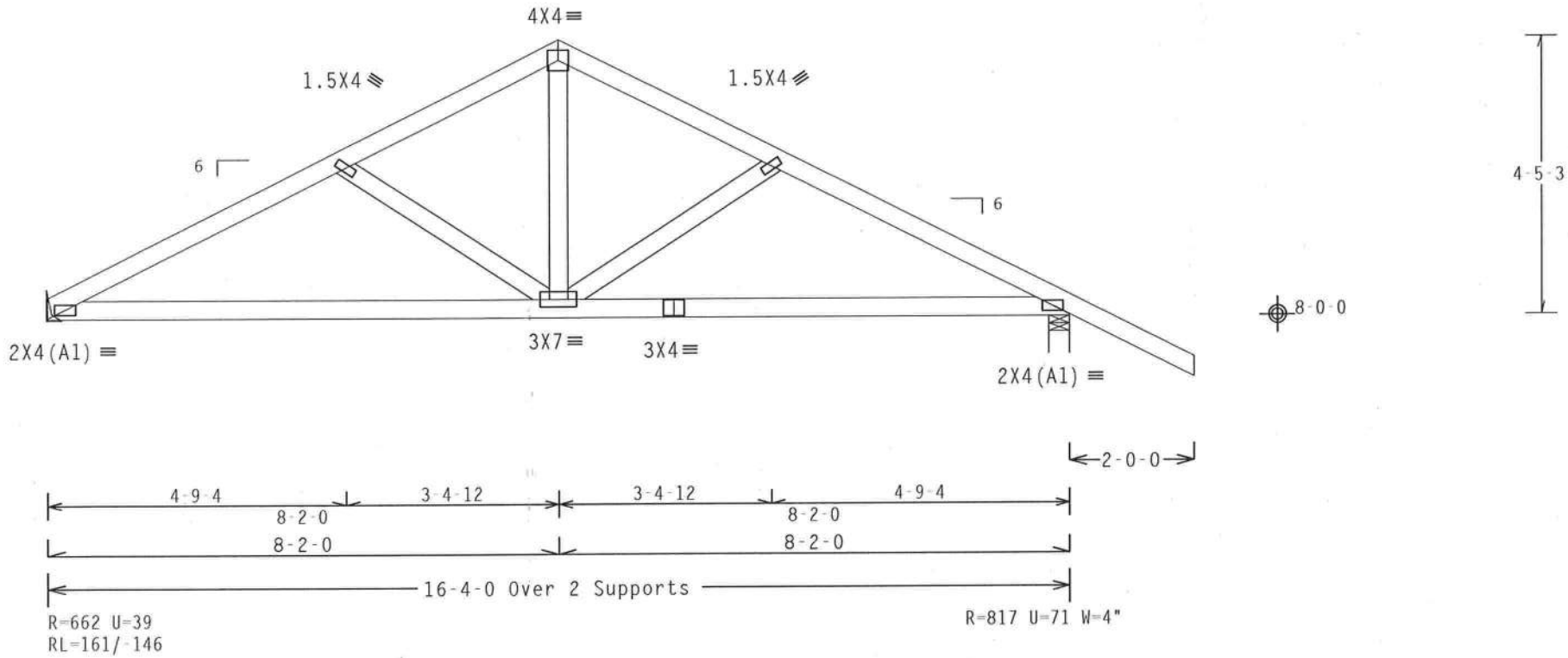

Design Crit: FBC2007Res/TPI-2002(STD)
FT/RT=10%(0%)/0(0)

PLT TYP. Wave | 9.05.03 | QTY:2 | FL/-/4/-/-/R/- | Scale =.375"/Ft.

ALPINE
ITW Building Components Group Inc.
Haines City, FL 33844
FL COA #0 278

WARNING TRUSSES REQUIRE EXTREME CARE IN FABRICATION, HANDLING, SHIPPING, INSTALLING AND BRACING. REFER TO BCSI (BUILDING COMPONENT SAFETY INFORMATION), PUBLISHED BY TPI (TRUSS PLATE INSTITUTE, 218 NORTH LEE STREET, SUITE 312, ALEXANDRIA, VA, 22314) AND WTCA (WOOD TRUSS COUNCIL OF AMERICA, 6300 ENTERPRISE LANE, MADISON, WI 53719) FOR SAFETY PRACTICES PRIOR TO PERFORMING THESE FUNCTIONS. UNLESS OTHERWISE INDICATED TOP CHORD SHALL HAVE PROPERLY ATTACHED STRUCTURAL PANELS AND BOTTOM CHORD SHALL HAVE A PROPERLY ATTACHED RIGID CEILING.

IMPORTANT FURNISH A COPY OF THIS DESIGN TO THE INSTALLATION CONTRACTOR. ITW BCG, INC. SHALL NOT BE RESPONSIBLE FOR ANY DEVIATION FROM THIS DESIGN; ANY FAILURE TO BUILD THE TRUSS IN CONFORMANCE WITH TPI; OR FABRICATING, HANDLING, SHIPPING, INSTALLING & BRACING OF TRUSSES. DESIGN CONFORMS WITH APPLICABLE PROVISIONS OF NDS (NATIONAL DESIGN SPEC. BY AF&PA) AND TPI. ITW BCG CONNECTOR PLATES ARE MADE OF 20/18/16GA (W,H/SS/K) ASTM A653 GRADE 40/60 (W, K/H,SS) GALV. STEEL. APPLY PLATES TO EACH FACE OF TRUSS AND, UNLESS OTHERWISE LOCATED ON THIS DESIGN, POSITION PER DRAWINGS 160A-Z. ANY INSPECTION OF PLATES FOLLOWED BY (I) SHALL BE PER ANNEX A3 OF TPI1-2002 SEC.3. A SEAL ON THIS DRAWING INDICATES ACCEPTANCE OF PROFESSIONAL ENGINEERING RESPONSIBILITY SOLELY FOR THE TRUSS COMPONENT DESIGN SHOWN. THE SUITABILITY AND USE OF THIS COMPONENT FOR ANY BUILDING IS THE RESPONSIBILITY OF THE BUILDING DESIGNER PER ANSI/TPI 1 SEC. 2.

DOUGLAS FLEMING LICENSE No. 66648 STATE OF FLORIDA PROFESSIONAL ENGINEER
May 19 '10

TC LL	20.0 PSF	REF R8228- 78010
TC DL	10.0 PSF	DATE 05/19/10
BC DL	10.0 PSF	DRW HCUSR8228 10139006
BC LL	0.0 PSF	HC-ENG DF/DF
TOT.LD.	40.0 PSF	SEQN- 114163
DUR.FAC.	1.25	
SPACING	24.0"	JREF- 1U1X8228Z01

(10-118--Fill in later STEVE GLENN -- , ** - EJ7)

Top chord 2x4 SP #2 Dense
Bot chord 2x4 SP #2 Dense

Roof overhang supports 2.00 psf soffit load.

Bottom chord checked for 10.00 psf non-concurrent live load.

MWFRS loads based on trusses located at least 7.50 ft. from roof edge.

110 mph wind, 15.00 ft mean hgt, ASCE 7-05, CLOSED bldg, not located within 4.50 ft from roof edge, CAT II, EXP C, wind TC DL=5.0 psf, wind BC DL=5.0 psf. Iw=1.00 GCpi(+/-)=0.18

Wind reactions based on MWFRS pressures.

Deflection meets L/240 live and L/180 total load.

Provide (2) 16d common nails(0.162"x3.5"), toe nailed at Top chord.
Provide (2) 16d common nails(0.162"x3.5"), toe nailed at Bot chord.

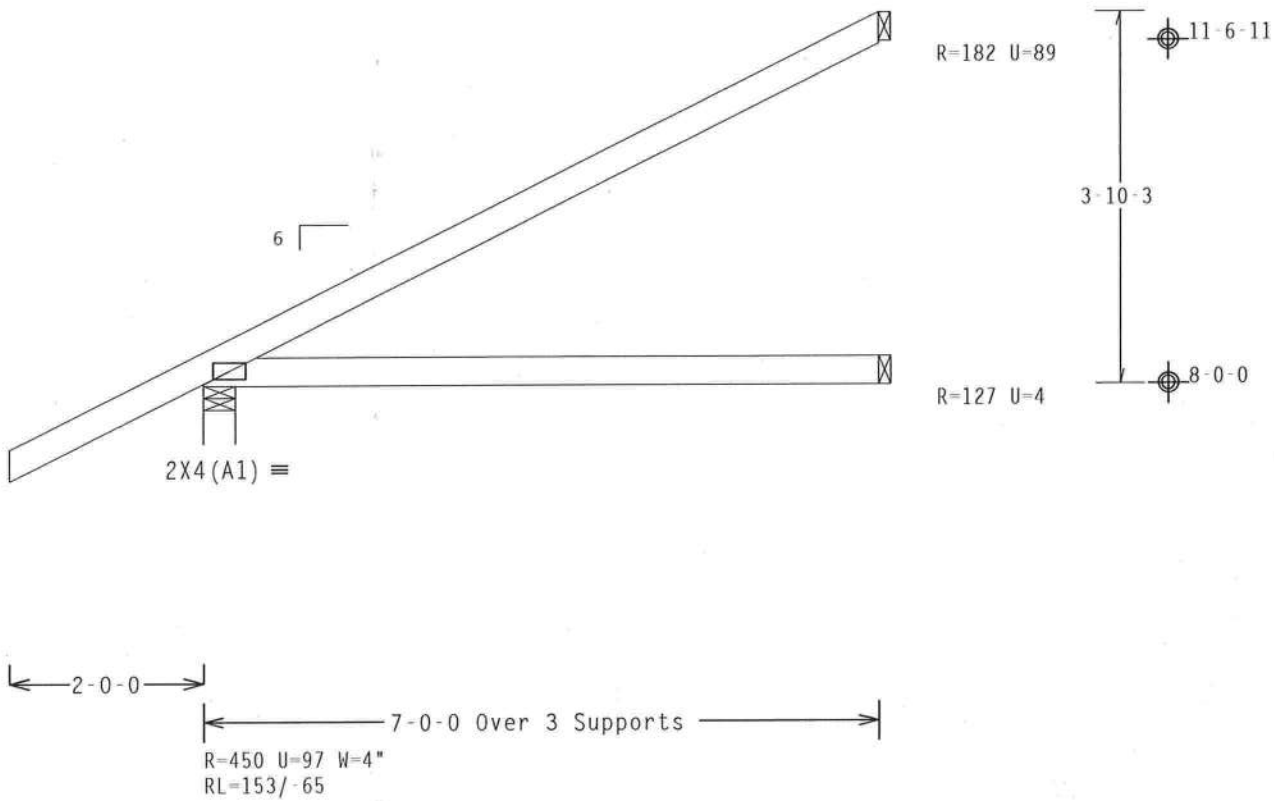

Design Crit: FBC2007Res/TPI-2002(STD)

PLT TYP. Wave FT/RT=10%(0%)/0(0) 9.05.03 QTY:13 FL/-/4/-/-/R/- Scale =.5"/Ft.

ALPINE
ITW Building Components Group Inc.
Haines City, FL 33844
FL COA #0 278

WARNING TRUSSES REQUIRE EXTREME CARE IN FABRICATION, HANDLING, SHIPPING, INSTALLING AND BRACING. REFER TO BCSI (BUILDING COMPONENT SAFETY INFORMATION), PUBLISHED BY TPI (TRUSS PLATE INSTITUTE, 218 NORTH LEE STREET, SUITE 312, ALEXANDRIA, VA, 22314) AND WTCA (WOOD TRUSS COUNCIL OF AMERICA, 6300 ENTERPRISE LANE, MADISON, WI 53719) FOR SAFETY PRACTICES PRIOR TO PERFORMING THESE FUNCTIONS. UNLESS OTHERWISE INDICATED TOP CHORD SHALL HAVE PROPERLY ATTACHED STRUCTURAL PANELS AND BOTTOM CHORD SHALL HAVE A PROPERLY ATTACHED RIGID CEILING.

IMPORTANT FURNISH A COPY OF THIS DESIGN TO THE INSTALLATION CONTRACTOR. ITW BCG, INC. SHALL NOT BE RESPONSIBLE FOR ANY DEVIATION FROM THIS DESIGN; ANY FAILURE TO BUILD THE TRUSS IN CONFORMANCE WITH TPI; OR FABRICATING, HANDLING, SHIPPING, INSTALLING & BRACING OF TRUSSES.
DESIGN CONFORMS WITH APPLICABLE PROVISIONS OF NDS (NATIONAL DESIGN SPEC. BY AF&PA) AND TPI. ITW BCG CONNECTOR PLATES ARE MADE OF 20/18/16GA (W,H/SS/K) ASTM A653 GRADE 40/60 (H, K/H,SS) GALV. STEEL. APPLY PLATES TO EACH FACE OF TRUSS AND, UNLESS OTHERWISE LOCATED ON THIS DESIGN, POSITION PER DRAWINGS 160A-2. ANY INSPECTION OF PLATES FOLLOWED BY (I) SHALL BE PER ANNEX A3 OF TPI1-2002 SEC.3. A SEAL ON THIS DRAWING INDICATES ACCEPTANCE OF PROFESSIONAL ENGINEERING RESPONSIBILITY SOLELY FOR THE TRUSS COMPONENT DESIGN SHOWN. THE SUITABILITY AND USE OF THIS COMPONENT FOR ANY BUILDING IS THE RESPONSIBILITY OF THE BUILDING DESIGNER PER ANSI/TPI 1 SEC. 2.

DOUGLAS FLEMING LICENSE No. 66648 STATE OF FLORIDA PROFESSIONAL ENGINEER
May 19 '10

TC LL	20.0 PSF	REF	R8228- 78011
TC DL	10.0 PSF	DATE	05/19/10
BC DL	10.0 PSF	DRW	HCUSR8228 10139007
BC LL	0.0 PSF	HC-ENG	DF/DF
TOT.LD.	40.0 PSF	SEQN-	114132
DUR.FAC.	1.25		
SPACING	24.0"	JREF-	1U1X8228Z01

(10-118--Fill in later STEVE GLENN -- , ** - CJ5)

Top chord 2x4 SP #2 Dense
Bot chord 2x4 SP #2 Dense

Roof overhang supports 2.00 psf soffit load.

Bottom chord checked for 10.00 psf non-concurrent live load.

Provide (2) 16d common nails(0.162"x3.5"), toe nailed at Top chord.
Provide (2) 16d common nails(0.162"x3.5"), toe nailed at Bot chord.

110 mph wind, 15.00 ft mean hgt, ASCE 7-05, CLOSED bldg, not located within 4.50 ft from roof edge, CAT II, EXP C, wind TC DL=5.0 psf, wind BC DL=5.0 psf. Iw=1.00 GCpi(+/-)=0.18

Wind reactions based on MWFRS pressures.

Deflection meets L/240 live and L/180 total load.

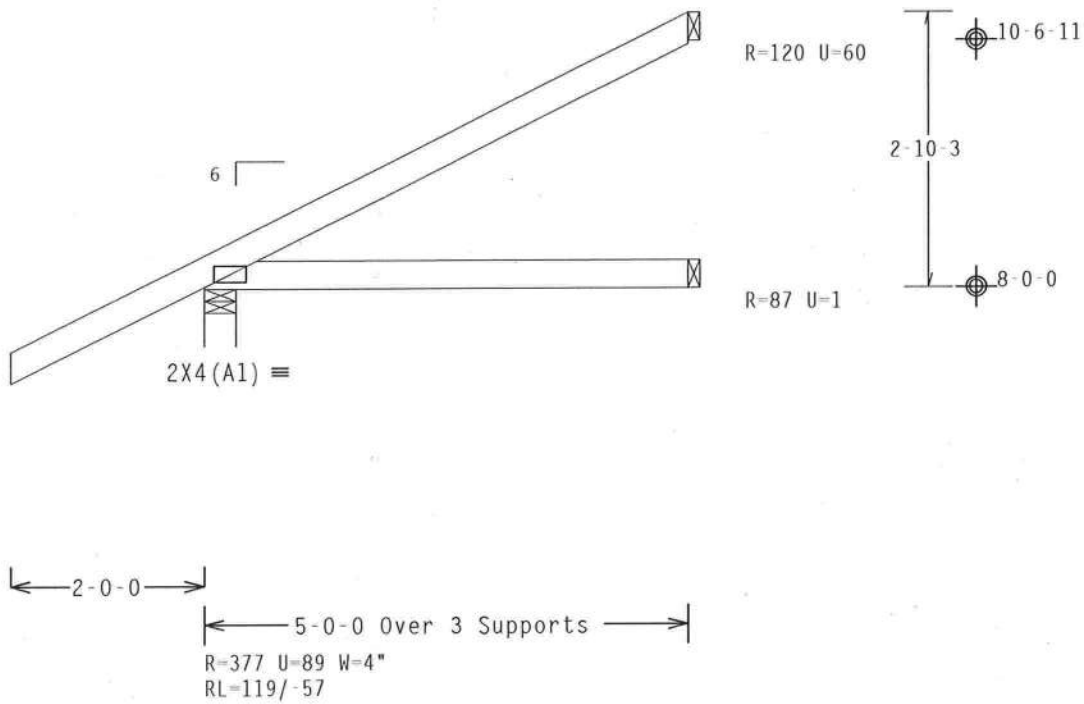

Design Crit: FBC2007Res/TPI-2002(STD)
FT/RT=10%(0%)/0(0)

PLT TYP. Wave | 9.05.03 | QTY:6 | FL/-/4/-/-/R/- | Scale =.5"/Ft.

ALPINE
ITW Building Components Group Inc.
Haines City, FL 33844
FL COA #0 278

WARNING TRUSSES REQUIRE EXTREME CARE IN FABRICATION, HANDLING, SHIPPING, INSTALLING AND BRACING. REFER TO BCSI (BUILDING COMPONENT SAFETY INFORMATION), PUBLISHED BY TPI (TRUSS PLATE INSTITUTE, 218 NORTH LEE STREET, SUITE 312, ALEXANDRIA, VA. 22314) AND WTCA (WOOD TRUSS COUNCIL OF AMERICA, 6300 ENTERPRISE LANE, MADISON, WI 53719) FOR SAFETY PRACTICES PRIOR TO PERFORMING THESE FUNCTIONS. UNLESS OTHERWISE INDICATED TOP CHORD SHALL HAVE PROPERLY ATTACHED STRUCTURAL PANELS AND BOTTOM CHORD SHALL HAVE A PROPERLY ATTACHED RIGID CEILING.

IMPORTANTFURNISH A COPY OF THIS DESIGN TO THE INSTALLATION CONTRACTOR. ITW BCG, INC. SHALL NOT BE RESPONSIBLE FOR ANY DEVIATION FROM THIS DESIGN; ANY FAILURE TO BUILD THE TRUSS IN CONFORMANCE WITH TPI; OR FABRICATING, HANDLING, SHIPPING, INSTALLING & BRACING OF TRUSSES.
DESIGN CONFORMS WITH APPLICABLE PROVISIONS OF NDS (NATIONAL DESIGN SPEC. BY AF&PA) AND TPI. ITW BCG CONNECTOR PLATES ARE MADE OF 20/18/16GA (W,H/SS/K) ASTM A653 GRADE 40/60 (W, K/H,SS) GALV. STEEL. APPLY PLATES TO EACH FACE OF TRUSS AND, UNLESS OTHERWISE LOCATED ON THIS DESIGN, POSITION PER DRAWINGS 160A-Z. ANY INSPECTION OF PLATES FOLLOWED BY (I) SHALL BE PER ANNEX A3 OF TPI1-2002 SEC.3. A SEAL ON THIS DRAWING INDICATES ACCEPTANCE OF PROFESSIONAL ENGINEERING RESPONSIBILITY SOLELY FOR THE TRUSS COMPONENT DESIGN SHOWN. THE SUITABILITY AND USE OF THIS COMPONENT FOR ANY BUILDING IS THE RESPONSIBILITY OF THE BUILDING DESIGNER PER ANSI/TPI 1 SEC. 2.

DOUGLAS FLEMING LICENSE No. 66648 STATE OF FLORIDA PROFESSIONAL ENGINEER
May 19 '10

TC LL	20.0 PSF	REF R8228- 78012
TC DL	10.0 PSF	DATE 05/19/10
BC DL	10.0 PSF	DRW HCUSR8228 10139008
BC LL	0.0 PSF	HC-ENG DF/DF
TOT.LD.	40.0 PSF	SEQN- 114137
DUR.FAC.	1.25	
SPACING	24.0"	JREF- 1U1X8228Z01

(10-118--Fill in later STEVE GLENN -- , ** - HJ7)

Top chord 2x4 SP #2 Dense
Bot chord 2x4 SP #2 Dense
Webs 2x4 SP #3

Hipjack supports 7-0-0 setback jacks with no webs.

Deflection meets L/240 live and L/180 total load.

110 mph wind, 15.00 ft mean hgt, ASCE 7-05, CLOSED bldg, not located within 4.50 ft from roof edge, CAT II, EXP C, wind TC DL=5.0 psf, wind BC DL=5.0 psf. Iw=1.00 GCpi(+/-)=0.18

Wind reactions based on MWFRS pressures.

Provide (2) 16d common nails(0.162"x3.5"), toe nailed at Top chord.
Provide (3) 16d common nails(0.162"x3.5"), toe nailed at Bot chord.

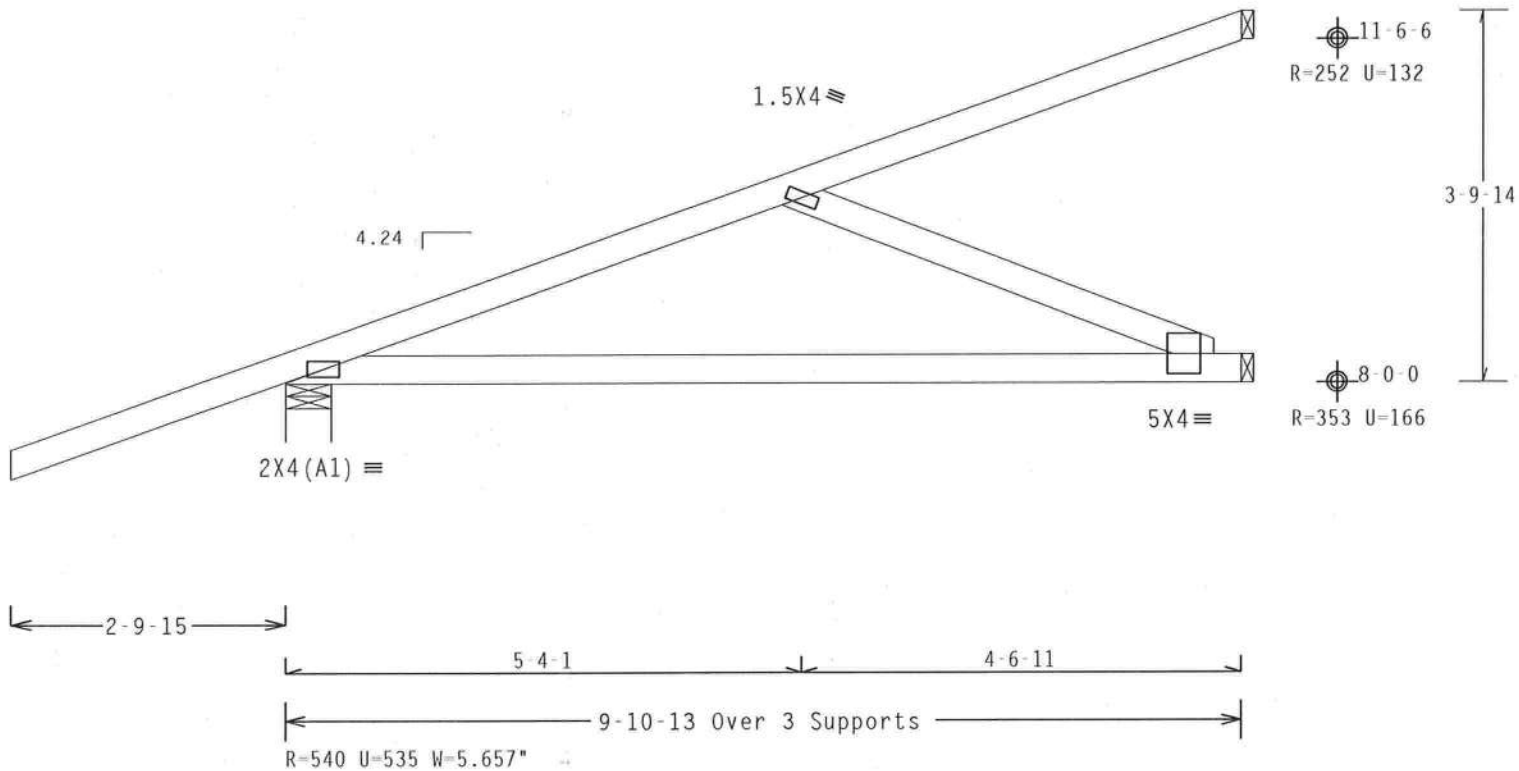

Design Crit: FBC2007Res/TPI-2002(STD)

PLT TYP. Wave | FT/RT=10%(0%)/0(0) | 9.05.03 | QTY:3 | FL/-/4/-/-/R/- | Scale =.5"/Ft.

ALPINE
ITW Building Components Group Inc.
Haines City, FL 33844
FL COA #0 278

WARNING TRUSSES REQUIRE EXTREME CARE IN FABRICATION, HANDLING, SHIPPING, INSTALLING AND BRACING. REFER TO BCSI (BUILDING COMPONENT SAFETY INFORMATION), PUBLISHED BY TPI (TRUSS PLATE INSTITUTE, 218 NORTH LEE STREET, SUITE 312, ALEXANDRIA, VA, 22314) AND WTCA (WOOD TRUSS COUNCIL OF AMERICA, 6300 ENTERPRISE LANE, MADISON, WI 53719) FOR SAFETY PRACTICES PRIOR TO PERFORMING THESE FUNCTIONS. UNLESS OTHERWISE INDICATED TOP CHORD SHALL HAVE PROPERLY ATTACHED STRUCTURAL PANELS AND BOTTOM CHORD SHALL HAVE A PROPERLY ATTACHED RIGID CEILING.

IMPORTANTFURNISH A COPY OF THIS DESIGN TO THE INSTALLATION CONTRACTOR. ITW BCG, INC. SHALL NOT BE RESPONSIBLE FOR ANY DEVIATION FROM THIS DESIGN; ANY FAILURE TO BUILD THE TRUSS IN CONFORMANCE WITH TPI; OR FABRICATING, HANDLING, SHIPPING, INSTALLING & BRACING OF TRUSSES.
DESIGN CONFORMS WITH APPLICABLE PROVISIONS OF NDS (NATIONAL DESIGN SPEC. BY AF&PA) AND TPI. ITW BCG CONNECTOR PLATES ARE MADE OF 20/18/16GA (W,H/SS/K) ASTM A653 GRADE 40/60 (W, K/H,SS) GALV. STEEL. APPLY PLATES TO EACH FACE OF TRUSS AND. UNLESS OTHERWISE LOCATED ON THIS DESIGN, POSITION PER DRAWINGS 160A-Z. ANY INSPECTION OF PLATES FOLLOWED BY (1) SHALL BE PER ANNEX A3 OF TPI1-2002 SEC.3. A SEAL ON THIS DRAWING INDICATES ACCEPTANCE OF PROFESSIONAL ENGINEERING RESPONSIBILITY SOLELY FOR THE TRUSS COMPONENT DESIGN SHOWN. THE SUITABILITY AND USE OF THIS COMPONENT FOR ANY BUILDING IS THE RESPONSIBILITY OF THE BUILDING DESIGNER PER ANSI/TPI 1 SEC. 2.

DOUGLAS FLEMING LICENSE No.66648 STATE OF FLORIDA PROFESSIONAL ENGINEER
19 '10

TC LL	20.0 PSF	REF R8228- 78013
TC DL	10.0 PSF	DATE 05/19/10
BC DL	10.0 PSF	DRW HCUSR8228 10139013
BC LL	0.0 PSF	HC-ENG DF/DF
TOT.LD.	40.0 PSF	SEQN- 114151
DUR.FAC.	1.25	
SPACING	24.0"	JREF- 1U1X8228Z01

(10-118--Fill in later STEVE GLENN -- , ** - CJ3)

Top chord 2x4 SP #2 Dense
Bot chord 2x4 SP #2 Dense

Roof overhang supports 2.00 psf soffit load.

Bottom chord checked for 10.00 psf non-concurrent live load.

Provide (2) 16d common nails(0.162"x3.5"), toe nailed at Top chord.
Provide (2) 16d common nails(0.162"x3.5"), toe nailed at Bot chord.

110 mph wind, 15.00 ft mean hgt, ASCE 7-05, CLOSED bldg, Located anywhere in roof, CAT II, EXP C, wind TC DL=5.0 psf, wind BC DL=5.0 psf. Iw=1.00 GCpi(+/-)=0.18

Wind reactions based on MWFRS pressures.

Deflection meets L/240 live and L/180 total load.

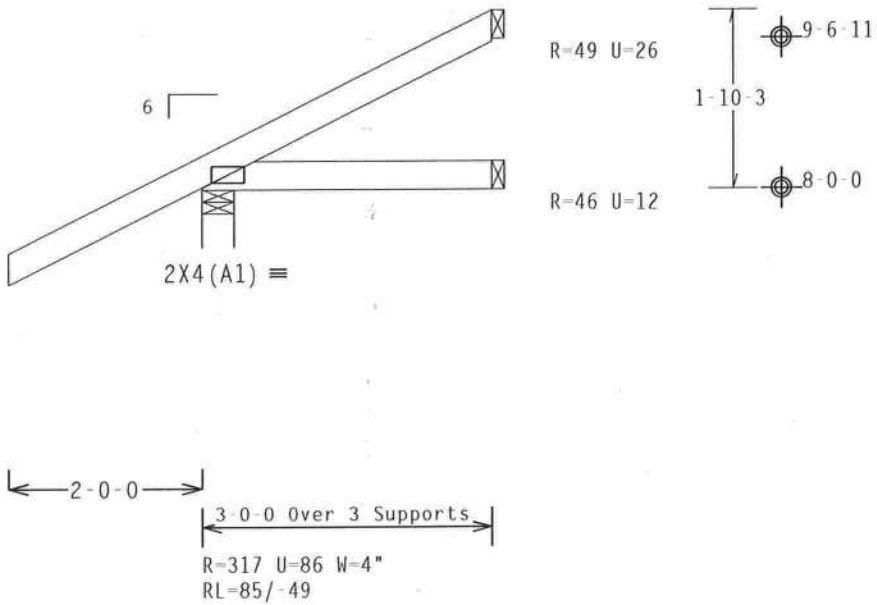

Design Crit: FBC2007Res/TPI-2002(STD)

PLT TYP. Wave | FT/RT=10%(0%)/0(0) | 9.05.03 | QTY:6 | FL/-/4/-/-/R/- | Scale =.5"/Ft.

ALPINE
ITW Building Components Group Inc.
Haines City, FL 33844
FL COA #0 278

WARNING TRUSSES REQUIRE EXTREME CARE IN FABRICATION, HANDLING, SHIPPING, INSTALLING AND BRACING. REFER TO BCSI (BUILDING COMPONENT SAFETY INFORMATION), PUBLISHED BY TPI (TRUSS PLATE INSTITUTE, 218 NORTH LEE STREET, SUITE 312, ALEXANDRIA, VA. 22314) AND WTCA (WOOD TRUSS COUNCIL OF AMERICA, 6300 ENTERPRISE LANE, MADISON, WI 53719) FOR SAFETY PRACTICES PRIOR TO PERFORMING THESE FUNCTIONS. UNLESS OTHERWISE INDICATED TOP CHORD SHALL HAVE PROPERLY ATTACHED STRUCTURAL PANELS AND BOTTOM CHORD SHALL HAVE A PROPERLY ATTACHED RIGID CEILING.

IMPORTANT FURNISH A COPY OF THIS DESIGN TO THE INSTALLATION CONTRACTOR. ITW BCG, INC. SHALL NOT BE RESPONSIBLE FOR ANY DEVIATION FROM THIS DESIGN; ANY FAILURE TO BUILD THE TRUSS IN CONFORMANCE WITH TPI; OR FABRICATING, HANDLING, SHIPPING, INSTALLING & BRACING OF TRUSSES. DESIGN CONFORMS WITH APPLICABLE PROVISIONS OF NDS (NATIONAL DESIGN SPEC. BY AFAPA) AND TPI. ITW BCG CONNECTOR PLATES ARE MADE OF 20/18/16GA (W,H/SS/K) ASTM A653 GRADE 40/60 (W, K/H,SS) GALV. STEEL. APPLY PLATES TO EACH FACE OF TRUSS AND, UNLESS OTHERWISE LOCATED ON THIS DESIGN, POSITION PER DRAWINGS 160A-2. ANY INSPECTION OF PLATES FOLLOWED BY (I) SHALL BE PER ANNEX A3 OF TPI1-2002 SEC.3. A SEAL ON THIS DRAWING INDICATES ACCEPTANCE OF PROFESSIONAL ENGINEERING RESPONSIBILITY SOLELY FOR THE TRUSS COMPONENT DESIGN SHOWN. THE SUITABILITY AND USE OF THIS COMPONENT FOR ANY BUILDING IS THE RESPONSIBILITY OF THE BUILDING DESIGNER PER ANSI/TPI 1 SEC. 2.

19 '10

TC LL	20.0 PSF	REF	R8228- 78014
TC DL	10.0 PSF	DATE	05/19/10
BC DL	10.0 PSF	DRW	HCUSR8228 10139009
BC LL	0.0 PSF	HC-ENG	DF/DF
TOT.LD.	40.0 PSF	SEQN-	114141
DUR.FAC.	1.25		
SPACING	24.0"	JREF-	1U1X8228Z01

(10-118--Fill in later STEVE GLENN -- , ** - CJ1)

Top chord 2x4 SP #2 Dense
Bot chord 2x4 SP #2 Dense

Roof overhang supports 2.00 psf soffit load.

Bottom chord checked for 10.00 psf non-concurrent live load.

Provide (2) 16d common nails(0.162"x3.5"), toe nailed at Top chord.
Provide (2) 16d common nails(0.162"x3.5"), toe nailed at Bot chord.

110 mph wind, 15.00 ft mean hgt, ASCE 7-05, CLOSED bldg, Located anywhere in roof, CAT II, EXP C, wind TC DL=5.0 psf, wind BC DL=5.0 psf. Iw=1.00 GCpi(+/-)=0.18

Wind reactions based on MWFRS pressures.

Deflection meets L/240 live and L/180 total load.

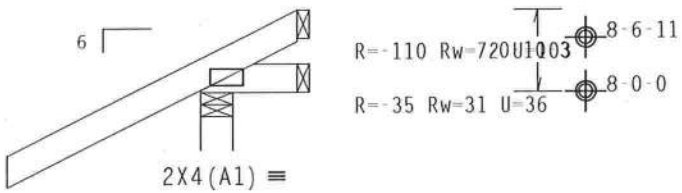

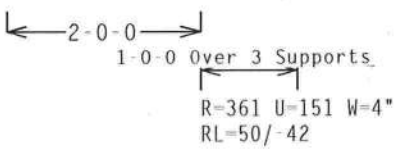

Design Crit: FBC2007Res/TPI-2002(STD)

PLT TYP. Wave FT/RT=10%(0%)/0(0) 9.05.03 QTY:6 FL/-/4/-/-/R/- Scale =.5"/Ft.

ALPINE
ITW Building Components Group Inc.
Haines City, FL 33844
FL COA #0 278

WARNING TRUSSES REQUIRE EXTREME CARE IN FABRICATION, HANDLING, SHIPPING, INSTALLING AND BRACING. REFER TO BCSI (BUILDING COMPONENT SAFETY INFORMATION), PUBLISHED BY TPI (TRUSS PLATE INSTITUTE, 218 NORTH LEE STREET, SUITE 312, ALEXANDRIA, VA, 22314) AND WTCA (WOOD TRUSS COUNCIL OF AMERICA, 6300 ENTERPRISE LANE, MADISON, WI 53719) FOR SAFETY PRACTICES PRIOR TO PERFORMING THESE FUNCTIONS. UNLESS OTHERWISE INDICATED TOP CHORD SHALL HAVE PROPERLY ATTACHED STRUCTURAL PANELS AND BOTTOM CHORD SHALL HAVE A PROPERLY ATTACHED RIGID CEILING.

IMPORTANTFURNISH A COPY OF THIS DESIGN TO THE INSTALLATION CONTRACTOR. ITW BCG, INC. SHALL NOT BE RESPONSIBLE FOR ANY DEVIATION FROM THIS DESIGN; ANY FAILURE TO BUILD THE TRUSS IN CONFORMANCE WITH TPI; OR FABRICATING, HANDLING, SHIPPING, INSTALLING & BRACING OF TRUSSES. DESIGN CONFORMS WITH APPLICABLE PROVISIONS OF NDS (NATIONAL DESIGN SPEC. BY AF&PA) AND TPI. ITW BCG CONNECTOR PLATES ARE MADE OF 20/18/16GA (W,H/SS/K) ASTM A653 GRADE 40/60 (W, K/H,SS) GALV. STEEL, APPLY PLATES TO EACH FACE OF TRUSS AND, UNLESS OTHERWISE LOCATED ON THIS DESIGN, POSITION PER DRAWINGS 160A-Z. ANY INSPECTION OF PLATES FOLLOWED BY (1) SHALL BE PER ANNEX A3 OF TPI1-2002 SEC.3. A SEAL ON THIS DRAWING INDICATES ACCEPTANCE OF PROFESSIONAL ENGINEERING RESPONSIBILITY SOLELY FOR THE TRUSS COMPONENT DESIGN SHOWN. THE SUITABILITY AND USE OF THIS COMPONENT FOR ANY BUILDING IS THE RESPONSIBILITY OF THE BUILDING DESIGNER PER ANSI/TPI 1 SEC. 2.

DOUGLAS FLEMING LICENSE No. 66648 STATE OF FLORIDA PROFESSIONAL ENGINEER
May 19 '10

TC LL	20.0 PSF	REF	R8228- 78015
TC DL	10.0 PSF	DATE	05/19/10
BC DL	10.0 PSF	DRW	HCUSR8228 10139010
BC LL	0.0 PSF	HC-ENG	DF/DF
TOT.LD.	40.0 PSF	SEQN-	114145
DUR.FAC.	1.25		
SPACING	24.0"	JREF-	1U1X8228Z01

(10-118--Fill in later STEVE GLENN -- , ** - EJ7G)

Top chord 2x4 SP #2 Dense
Bot chord 2x6 SP #2
Webs 2x4 SP #3

110 mph wind, 15.00 ft mean hgt, ASCE 7-05, CLOSED bldg, not located within 4.50 ft from roof edge, CAT II, EXP C, wind TC DL=5.0 psf, wind BC DL=5.0 psf. Iw=1.00 GCpi(+/-)=0.18

Wind reactions based on MWFRS pressures.

Deflection meets L/240 live and L/180 total load.

Special loads
------(Lumber Dur.Fac.=1.25 / Plate Dur.Fac.=1.25)

TC-	From	62 plf at	0.00 to	62 plf at	7.00		
TC-	From	0 plf at	7.00 to	62 plf at	7.00		
BC-	From	20 plf at	0.00 to	20 plf at	3.40		
BC-	From	10 plf at	3.40 to	10 plf at	7.00		
BC-	662.20 lb Conc. Load at	3.40, 5.40					

Right end vertical not exposed to wind pressure.

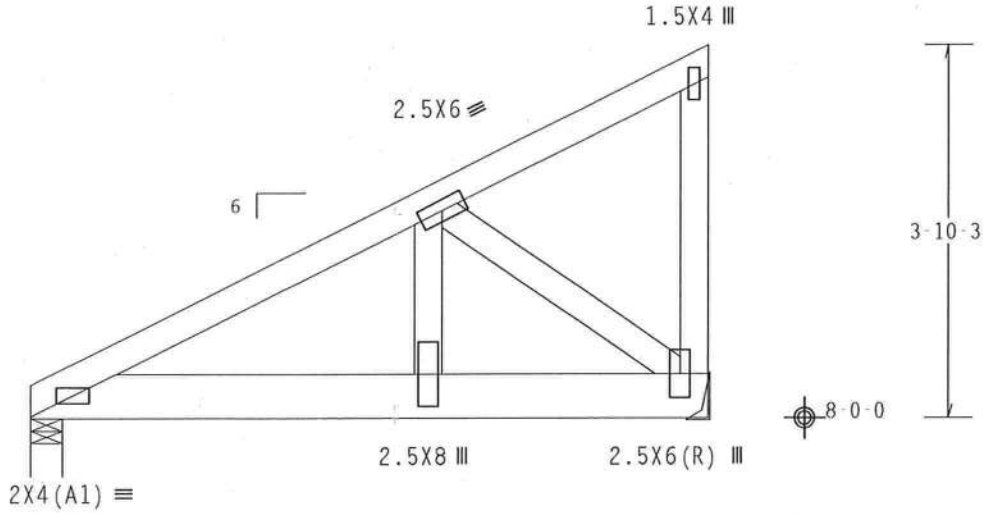

Design Crit: FBC2007Res/TPI-2002(STD)

PLT TYP. Wave FT/RT=10%(0%)/0(0) 9.05.03 QTY:1 FL/-/4/-/-/R/- Scale =.5"/Ft.

ALPINE
ITW Building Components Group Inc.
Haines City, FL 33844
FL COA #0 278

WARNING TRUSSES REQUIRE EXTREME CARE IN FABRICATION, HANDLING, SHIPPING, INSTALLING AND BRACING. REFER TO BCSI (BUILDING COMPONENT SAFETY INFORMATION), PUBLISHED BY TPI (TRUSS PLATE INSTITUTE, 218 NORTH LEE STREET, SUITE 312, ALEXANDRIA, VA, 22314) AND WTCA (WOOD TRUSS COUNCIL OF AMERICA, 6300 ENTERPRISE LANE, MADISON, WI 53719) FOR SAFETY PRACTICES PRIOR TO PERFORMING THESE FUNCTIONS. UNLESS OTHERWISE INDICATED TOP CHORD SHALL HAVE PROPERLY ATTACHED STRUCTURAL PANELS AND BOTTOM CHORD SHALL HAVE A PROPERLY ATTACHED RIGID CEILING.

IMPORTANT FURNISH A COPY OF THIS DESIGN TO THE INSTALLATION CONTRACTOR. ITW BCG, INC. SHALL NOT BE RESPONSIBLE FOR ANY DEVIATION FROM THIS DESIGN; ANY FAILURE TO BUILD THE TRUSS IN CONFORMANCE WITH TPI; OR FABRICATING, HANDLING, SHIPPING, INSTALLING & BRACING OF TRUSSES. DESIGN CONFORMS WITH APPLICABLE PROVISIONS OF NDS (NATIONAL DESIGN SPEC, BY AF&PA) AND TPI. ITW BCG CONNECTOR PLATES ARE MADE OF 20/18/16GA (W,H/SS/K) ASTM A653 GRADE 40/60 (W, K/H,SS) GALV. STEEL. APPLY PLATES TO EACH FACE OF TRUSS AND, UNLESS OTHERWISE LOCATED ON THIS DESIGN, POSITION PER DRAWINGS 160A-Z. ANY INSPECTION OF PLATES FOLLOWED BY (I) SHALL BE PER ANNEX A3 OF TPI1-2002 SEC.3. A SEAL ON THIS DRAWING INDICATES ACCEPTANCE OF PROFESSIONAL ENGINEERING RESPONSIBILITY SOLELY FOR THE TRUSS COMPONENT DESIGN SHOWN. THE SUITABILITY AND USE OF THIS COMPONENT FOR ANY BUILDING IS THE RESPONSIBILITY OF THE BUILDING DESIGNER PER ANSI/TPI 1 SEC. 2.

DOUGLAS FLEMING LICENSE No. 66648 STATE OF FLORIDA PROFESSIONAL ENGINEER
May 19 '10

TC LL	20.0 PSF	REF	R8228- 78016
TC DL	10.0 PSF	DATE	05/19/10
BC DL	10.0 PSF	DRW	HCUSR8228 10139011
BC LL	0.0 PSF	HC-ENG	DF/DF
TOT.LD.	40.0 PSF	SEQN-	114185
DUR.FAC.	1.25		
SPACING	24.0"	JREF-	1U1X8228Z01

CLB WEB BRACE SUBSTITUTION

THIS DETAIL IS TO BE USED WHEN CONTINUOUS LATERAL BRACING (CLB) IS SPECIFIED ON A TRUSS DESIGN BUT AN ALTERNATIVE WEB BRACING METHOD IS DESIRED.

NOTES:

THIS DETAIL IS ONLY APPLICABLE FOR CHANGING THE SPECIFIED CLB SHOWN ON SINGLE PLY SEALED DESIGNS TO T-BRACING OR SCAB BRACING.

ALTERNATIVE BRACING SPECIFIED IN CHART BELOW MAY BE CONSERVATIVE. FOR MINIMUM ALTERNATIVE BRACING, RE-RUN DESIGN WITH APPROPRIATE BRACING.

WEB MEMBER SIZE	SPECIFIED CLB BRACING	ALTERNATIVE BRACING T OR L-BRACE	ALTERNATIVE BRACING SCAB BRACE
2X3 OR 2X4	1 ROW	2X4	1-2X4
2X3 OR 2X4	2 ROWS	2X6	2-2X4
2X6	1 ROW	2X4	1-2X6
2X6	2 ROWS	2X6	2-2X4(*)
2X8	1 ROW	2X6	1-2X8
2X8	2 ROWS	2X6	2-2X6(*)

T-BRACE, L-BRACE AND SCAB BRACE TO BE SAME SPECIES AND GRADE OR BETTER THAN WEB MEMBER UNLESS SPECIFIED OTHERWISE ON ENGINEER'S SEALED DESIGN.

(*) CENTER SCAB ON WIDE FACE OF WEB. APPLY (1) SCAB TO EACH FACE OF WEB.

T-BRACING OR L-BRACING:

APPLY TO EITHER SIDE OF WEB NARROW FACE.
ATTACH WITH 10d BOX OR GUN
(0.128"x 3.",MIN) NAILS.
AT 6" O.C.
BRACE IS A
MINIMUM 80% OF WEB
MEMBER LENGTH

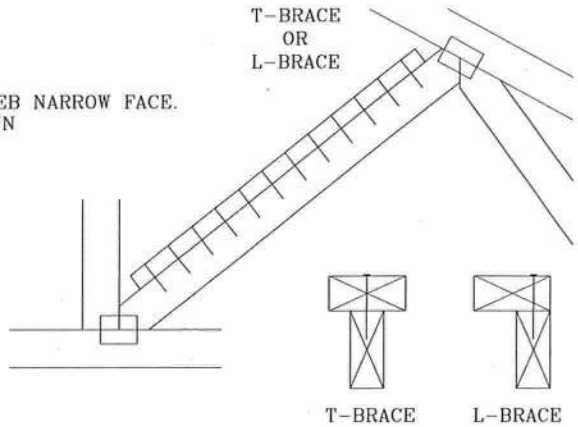

SCAB BRACING:

APPLY SCAB(S) TO WIDE FACE OF WEB.
NO MORE THAN (1) SCAB PER FACE.
ATTACH WITH 10d BOX OR GUN
(0.128"x 3.",MIN) NAILS.
AT 6" O.C.
BRACE IS A MINIMUM
80% OF WEB MEMBER LENGTH

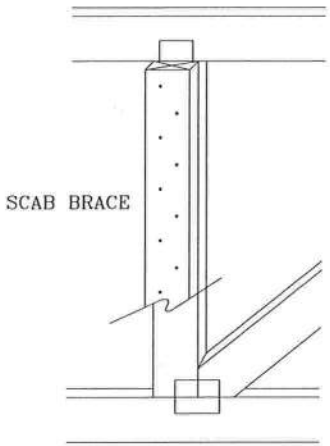

TW Building Components Group Inc.
Earth City, MO 63045

WARNING READ AND FOLLOW ALL NOTES ON THIS SHEET!
Trusses require extreme care in fabricating, handling, shipping, installing and bracing. Refer to and follow BCSI (Building Component Safety Information, by TPI and WTCA) for safety practices prior to performing these functions. Installers shall provide temporary bracing per BCSI. Unless noted otherwise, top chord shall have properly attached structural panels and bottom chord shall have a properly attached rigid ceiling. Locations shown for permanent lateral restraint of webs shall have bracing installed per BCSI sections B3 & B7. See this job's general notes page for more information.

IMPORTANT FURNISH COPY OF THIS DESIGN TO INSTALLATION CONTRACTOR.
ITW Building Components Group Inc. (ITWBCG) shall not be responsible for any deviation from this design, any failure to build the truss in conformance with TPI, or fabricating, handling, shipping, installing & bracing of trusses. ITWBCG connector plates are made of 20/18/16GA (W,H/S/K) ASTM A653 grade 37/40/50 (K/W/H,S) galv. steel. Apply plates to each face of truss, positioned as shown above and on Joint Details. A seal on this drawing or cover page indicates acceptance and professional engineering responsibility solely for the truss component design shown. The suitability and use of this component for any building is the responsibility of the Building Designer per ANST/TPI 1 Sec. 2.
ITW-BCG: www.itwbcg.com; TPI: www.tpinst.com; WTCA: www.sbcindustry.com; ICC: www.iccsafe.org

DOUGLAS FLEMING LICENSE No. 66648 STATE OF FLORIDA PROFESSIONAL ENGINEER
May 19 '10

TC LL	PSF	REF CLB SUBST.
TC DL	PSF	DATE 1/1/09
BC DL	PSF	DRWG BRCLBSUB0109
BC LL	PSF	
BOT. LD.	PSF	
DUR. FAC.		
SPACING		