ALL OF S1/2 OF SW1/4 LYING NE
FLA POWER N R/W LINE EX E 60
FT FOR RD R/W & EX RD R/W FOR

BERRY CHRISTOPHER L/BERRY ESTHER A
5276 SW CR 138
FORT WHITE, FL 32038

2023

21-7S-16-04273-001

COLUMBIA COUNTY PROPERTY

BUILDING CHARACTERISTICS

ELEMENT	CD	CONSTRUCTION
Exterior Wall	05	AVERAGE 100
Roof Structur	03	GABLE/HIP 100
Roof Cover	03	COMP SHNGL 100
Interior Wall	05	DRYWALL 100
Interior Floo	14	CARPET 90
Interior Floo	06	VINYL ASB 10
Air Condition	03	CENTRAL 100
Heating Type	04	AIR DUCTED 100
Bedrooms		3 100
Bathrooms		2 100
Frame	01	NONE 100
Stories	1.	1. 100
Architectual	05	CONV 100
Units		0 100
Condition Adj	03	03 100
Kitchen Adjus	01	01 100
Quality	05	05
DOR CODE	0101	SFRES/SFRES
MAP NUM		MKT AREA 02
NEIGHBORHOOD/LOC	21716.00	1.00/

AREA TYPE	TOTAL GROSS AREA	PCT OF BASE	TOT ADJ AREA	SUBAREA MARKET VALUE
BAS	1,152	100	1,152	73,350
FSP	312	40	125	7,959
FST	176	55	97	6,176
UCP	664	20	133	8,468
UDU	192	55	106	6,749
UOP	60	20	12	764
UOP	84	20	17	1,082
UOP	168	20	34	2,165
TOTALS	2,808		1,676	106,714

MARKET ADJUSTMENTS

TYPE	MDL	EFF. AREA	TOT ADJ PTS	EFF. BASE RATE	REPL. COST NEW	AYB	EYB	ECON	FNCT		NORM	% COND
0300	01	1,676	108.2900	106.12	177,857	1983	1983	0	0	0	40.00	60.00

2 SFR PILING – 0% - 2021 HX Base Yr

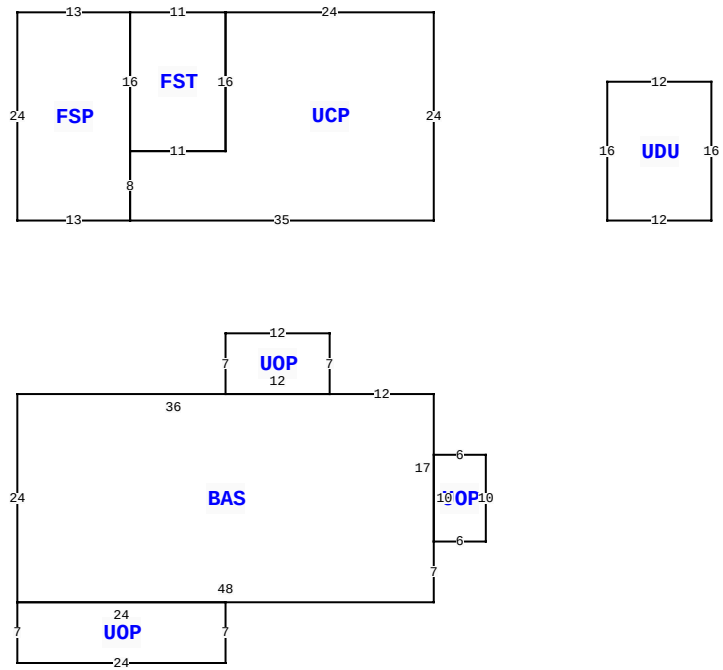

5278 SW COUNTY ROAD 138 , FORT WHITE

BLD DATE		LGL DATE	
XF DATE		LAND DATE	05/03/2023 MLU
INC DATE		AG DATE	

VALUATION SUMMARY

VALUATION BY	STANDARD
Tax Group: 3	Tax Dist:
BUILDING MARKET VALUE	234,898
TOTAL MARKET OB/XF VALUE	39,306
TOTAL LAND VALUE - MARKET	301,665
TOTAL MARKET VALUE	575,869
SOH/AGL Deduction	43,332
ASSESSED VALUE	532,537
TOTAL EXEMPTION VALUE	0
BASE TAXABLE VALUE	532,537
TOTAL JUST VALUE	575,869
NCON VALUE	0
INCOME VALUE	
PREVIOUS YEAR MKT VALUE	

SALE:1:1: REFER TO NOTE ABOUT SALE ON PRCL #04343-

PERMIT NUM	DESCRIPTION	AMT	ISSUED
7553	M H	60	09/02/1993

SALES DATA

OFF RECORD Number	DATE	TYPE INST	Q U	V I	RSN CD	SALE PRICE
1414/2212	5/28/2020	WD	Q	I	05	1,290,000
GRANTOR: MELVIN J ERB JR & SUS						
GRANTEE: CHRISTOPHER L & EST						
1321/1889	8/31/2016	WD	Q	I	01	875,000
GRANTOR: LAKE CITY ASSOCIATES,						
GRANTEE: MELVIN J ERB JR & S						

BUILDING NOTES

BUILDING DIMENSIONS

BAS= W12 UOP= N7 W12 S7 E12$ W36 S24 UOP= S7 E24 N7 W24$ E48 N7 UOP= E6 N10 W6 S10$ N17$ PTR= N20 UCP= N24 W24 FST= W11S16 E11 N16$ S16 W11 FSP= N16 W13S24 E13N8$ S8 E35 PTR= E20 UDU= E12 N16 W12 S16$ W20$.

EXTRA FEATURES

LN	OB/XF CODE	DESCRIPTION	BLD	CAP	L	W	UNITS	UT	Adj R	ADJ UNIT PRICE	ORIG COND	YEAR ON	YEAR ACTUAL	Q	% COND	OB/XF MKT VALUE	NOTES
1	0040	BARN,POLE	0	0	24	60	1,440.00	UT	2.50	2.50	50	0	0	3	50	1,800	
2	0080	DECKING	0	0	16	15	240.00	UT	5.00	5.00	50	0	0	3	50	600	
3	0166	CONC,PAVMT	0	0	8	24	192.00	UT	2.00	2.00	100	0	0	3	100	384	
4	9945	Well/Sept	0	0	0	0	1.00	UT	7,000.00	7,000.00	100			3	100	7,000	
5	0260	PAVEMENT-A	0	0	1980	10	19,800.00	UT	1.10	1.10	90	2003	2003	3	90	19,602	
6	0040	BARN,POLE	0	0	62	64	3,968.00	UT	2.50	2.50	100	2003	2003	3	100	9,920	

LAND DESCRIPTION

TOTAL OB/XF 39,306

LN	USE CODE	LAND USE DESCRIPTION	CAP	RD	LOC ZONE	FRONT	DEPTH	TOT LND UTS	UNIT TYPE	DT	DPTH FACT	% COND	TOT ADJ	UNIT PRICE	ADJ UNIT PRICE	LAND VALUE	OTHER ADJUSTMENTS AND NOTES	YEAR	DENSITY	DECL	FRZ	YR	CONSRV
1	0100	SFR	0		A-1	0.00	0.00	50.00	AC		1.00	1.00	0.65	7,500.00	4,875.00	243,750							
2	9900	AC NON-AG	0		A-1	0.00	0.00	25.74	AC		1.00	1.00	0.50	4,500.00	2,250.00	57,915							

REVIEW DATE 07/06/2015 BY DFRP Total Acres: 75.74 Total Land Value: 301,665 Market: 0 Agricultural: 0 Common: 301,665 PRINTED 05/31/2023 BY SYS

ALL OF S1/2 OF SW1/4 LYING NE
FLA POWER N R/W LINE EX E 60
FT FOR RD R/W & EX RD R/W FOR

BERRY CHRISTOPHER L/BERRY ESTHER A
5276 SW CR 138
FORT WHITE, FL 32038

2023

21-7S-16-04273-001

COLUMBIA COUNTY PROPERTY

BUILDING CHARACTERISTICS

ELEMENT	CD	CONSTRUCTION
Exterior Wall	10	ABOVE AVG. 100
Roof Structur	03	GABLE/HIP 100
Roof Cover	03	COMP SHNGL 100
Interior Wall	06	CUST PANEL 100
Interior Floo	12	HARDWOOD 100
Air Condition	02	WINDOW 100
Heating Type	03	FORCED AIR 100
Bedrooms		1 100
Bathrooms		1 100
Frame	01	NONE 100
Stories	1.	1. 100
Architectual	05	CONV 100
Units		0 100
Condition Adj	03	03 100
Kitchen Adjus	01	01 100
Quality	05	05

DOR CODE 0101 SFRES/SFRES
MAP NUM | MKT AREA 02
NEIGHBORHOOD/LOC 21716.00 1.00/

AREA TYPE	TOTAL GROSS AREA	PCT OF BASE	TOT ADJ AREA	SUBAREA MARKET VALUE
BAS	1,144	100	1,144	79,706
FSP	84	40	34	2,369
TOTALS	1,228		1,178	82,076

MARKET ADJUSTMENTS

TYPE	MDL	EFF. AREA	TOT ADJ PTS	EFF. BASE RATE	REPL. COST NEW	AYB	EYB	ECON	FNCT		NORM	% COND
0100	01	1,178	115.2600	107.19	126,270	1984	1984	0	0	0	35.00	65.00

3 SINGLE FAM – 0% - 2021 HX Base Yr

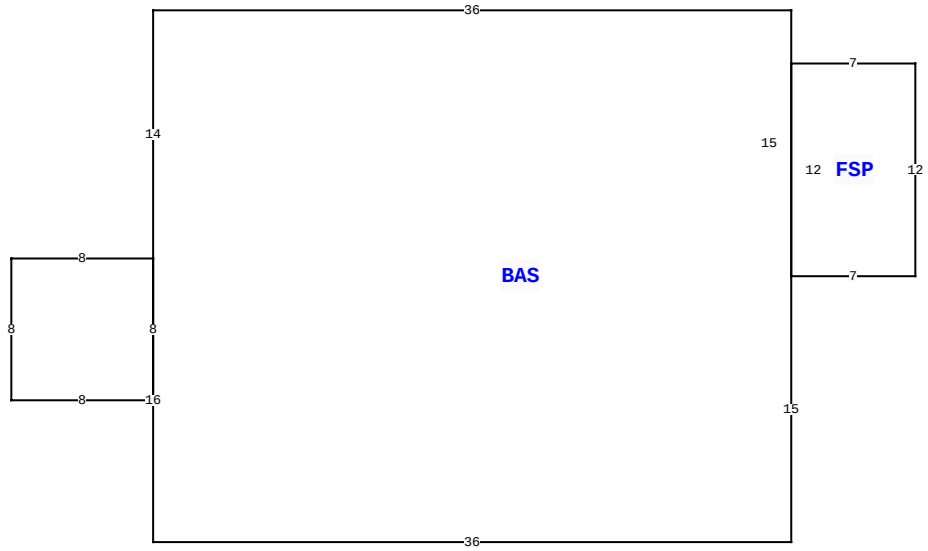

5278 SW COUNTY ROAD 138 , FORT WHITE

BLD DATE		LGL DATE	
XF DATE		LAND DATE	05/03/2023 MLU
INC DATE		AG DATE	

VALUATION SUMMARY

VALUATION BY	STANDARD
Tax Group: 3	Tax Dist:
BUILDING MARKET VALUE	234,898
TOTAL MARKET OB/XF VALUE	39,306
TOTAL LAND VALUE - MARKET	301,665
TOTAL MARKET VALUE	575,869
SOH/AGL Deduction	43,332
ASSESSED VALUE	532,537
TOTAL EXEMPTION VALUE	0
BASE TAXABLE VALUE	532,537
TOTAL JUST VALUE	575,869
NCON VALUE	0
INCOME VALUE	
PREVIOUS YEAR MKT VALUE	

PERMIT NUM	DESCRIPTION	AMT	ISSUED

SALES DATA

OFF RECORD Number	DATE	TYPE INST	Q U /	V I /	RSN CD	SALE PRICE
1414/2212	5/28/2020	WD	Q	I	05	1,290,000
GRANTOR: MELVIN J ERB JR & SUS						
GRANTEE: CHRISTOPHER L & EST						
1321/1889	8/31/2016	WD	Q	I	01	875,000
GRANTOR: LAKE CITY ASSOCIATES,						
GRANTEE: MELVIN J ERB JR & S						

BUILDING NOTES

BUILDING DIMENSIONS

BAS= W36 S14 W8 S8 E8 N8 S16 E36 N15 FSP= E7N12 W7 S12$ N15$.

EXTRA FEATURES

L N	OB/XF CODE	DESCRIPTION	BLD	CAP	L	W	UNITS	UT	Adj R	ADJ UNIT PRICE	ORIG COND	YEAR ON	YEAR ACTUAL	Q	% COND	OB/XF MKT VALUE	NOTES

LAND DESCRIPTION

TOTAL OB/XF 0

L N	USE CODE	LAND USE DESCRIPTION	CAP	R D	LOC ZONE	FRONT	DEPTH	TOT LND UTS	UNIT TYPE	D T	DPTH FACT	% COND	TOT ADJ	UNIT PRICE	ADJ UNIT PRICE	LAND VALUE	OTHER ADJUSTMENTS AND NOTES	YEAR	DENSITY	DECL	FRZ	YR	CONSRV

REVIEW DATE 07/06/2015 BY DFRP Total Acres: 75.74 Total Land Value: 301,665 Market: 0 Agricultural: 0 Common: 301,665 PRINTED 05/31/2023 BY SYS

ALL OF S1/2 OF SW1/4 LYING NE
FLA POWER N R/W LINE EX E 60
FT FOR RD R/W & EX RD R/W FOR

BERRY CHRISTOPHER L/BERRY ESTHER A
5276 SW CR 138
FORT WHITE, FL 32038

2023

21-7S-16-04273-001

BUILDING CHARACTERISTICS

ELEMENT	CD	CONSTRUCTION
Exterior Wall	31	VINYL SID 100
Roof Structur	03	GABLE/HIP 100
Roof Cover	03	COMP SHNGL 100
Interior Wall	05	DRYWALL 100
Interior Floo	14	CARPET 90
Interior Floo	08	SHT VINYL 10
Air Condition	03	CENTRAL 100
Heating Type	04	AIR DUCTED 100
Bedrooms		2 100
Bathrooms		2 100
Stories	1.	1. 100
Architectual	01	CONV 100
Units		0 100
Condition Adj	03	03 100
Kitchen Adjus	01	01 100
Quality	05	05
DOR CODE	0101	SFRES/SFRES
MAP NUM		MKT AREA 02
NEIGHBORHOOD/LOC	21716.00	1.00/

AREA TYPE	TOTAL GROSS AREA	PCT OF BASE	TOT ADJ AREA	SUBAREA MARKET VALUE
BAS	960	100	960	44,711
UOP	120	25	30	1,397
TOTALS	1,080		990	46,108

MARKET ADJUSTMENTS

TYPE	MDL	EFF. AREA	TOT ADJ PTS	EFF. BASE RATE	REPL. COST NEW	AYB	EYB	ECON	FNCT		NORM	% COND
0201	02	990	112.9000	84.68	83,833	1994	1994	0	0	0	45.00	55.00

4 MANUF 1 – 0% - 2021 HX Base Yr

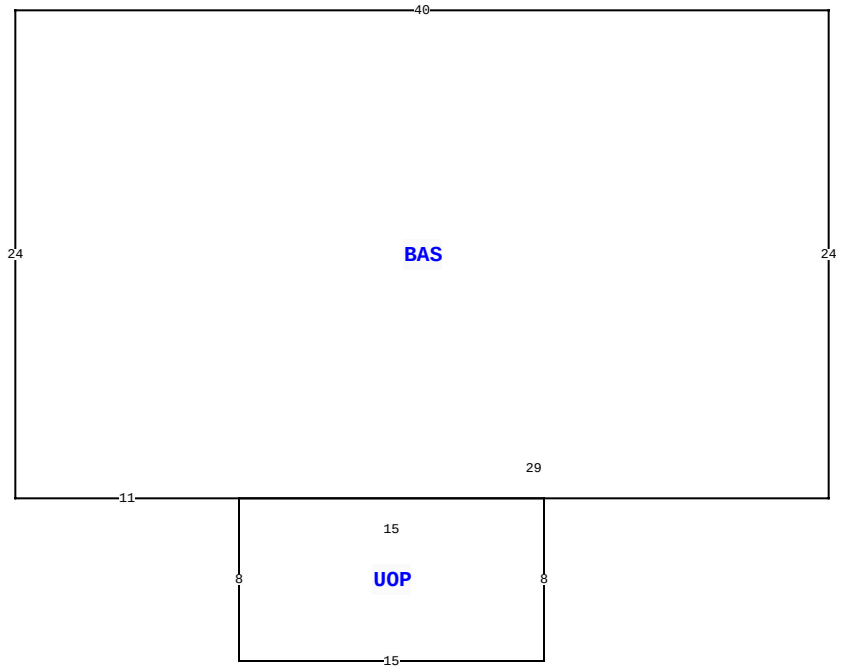

5278 SW COUNTY ROAD 138 , FORT WHITE

BLD DATE		LGL DATE	
XF DATE		LAND DATE	05/03/2023 MLU
INC DATE		AG DATE	

COLUMBIA COUNTY PROPERTY

PAGE 3 of 3 3

VALUATION SUMMARY

VALUATION BY	STANDARD
Tax Group: 3	Tax Dist:
BUILDING MARKET VALUE	234,898
TOTAL MARKET OB/XF VALUE	39,306
TOTAL LAND VALUE - MARKET	301,665
TOTAL MARKET VALUE	575,869
SOH/AGL Deduction	43,332
ASSESSED VALUE	532,537
TOTAL EXEMPTION VALUE	0
BASE TAXABLE VALUE	532,537
TOTAL JUST VALUE	575,869
NCON VALUE	0
INCOME VALUE	
PREVIOUS YEAR MKT VALUE	

PERMIT NUM	DESCRIPTION	AMT	ISSUED

SALES DATA

OFF RECORD Number	DATE	TYPE INST	Q U	V I	RSN CD	SALE PRICE
1414/2212	5/28/2020	WD	Q	I	05	1,290,000
GRANTOR: MELVIN J ERB JR & SUS						
GRANTEE: CHRISTOPHER L & EST						
1321/1889	8/31/2016	WD	Q	I	01	875,000
GRANTOR: LAKE CITY ASSOCIATES,						
GRANTEE: MELVIN J ERB JR & S						

BUILDING NOTES

BUILDING DIMENSIONS

BAS= W40 S24 E11 UOP= S8 E15 N8 W15$ E29 N24$.

EXTRA FEATURES

L N	OB/XF CODE	DESCRIPTION	BLD	CAP	L	W	UNITS	UT	Adj R	ADJ UNIT PRICE	ORIG COND	YEAR ON	YEAR ACTUAL	Q	% COND	OB/XF MKT VALUE	NOTES

LAND DESCRIPTION

TOTAL OB/XF 0

L N	USE CODE	LAND USE DESCRIPTION	CAP	R D	LOC ZONE	FRONT	DEPTH	TOT LND UTS	UNIT TYPE	D T	DPTH FACT	% COND	TOT ADJ	UNIT PRICE	ADJ UNIT PRICE	LAND VALUE	OTHER ADJUSTMENTS AND NOTES	YEAR	DENSITY	DECL	FRZ	YR	CONSRV

REVIEW DATE 07/06/2015 BY DFRP Total Acres: 75.74 Total Land Value: 301,665 Market: 0 Agricultural: 0 Common: 301,665 PRINTED 05/31/2023 BY SYS