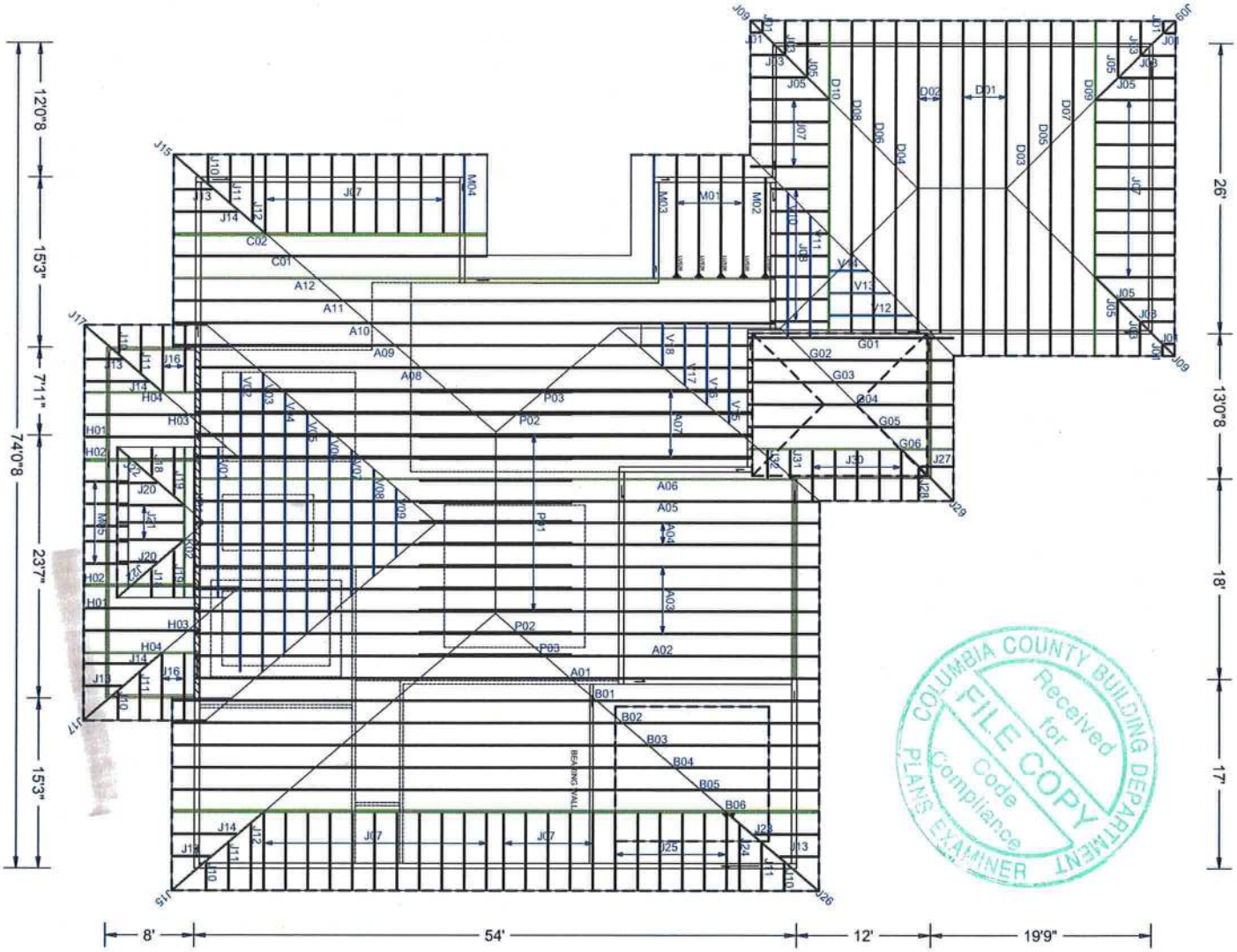

COLUMBIA COUNTY BUILDING DEPARTMENT
Received for
FILE COPY
Code Compliance
PLANS EXAMINER

ROOF PITCH: 6 & 7/12

CLG PITCH: 3/12 @ VERANDAH
12" STEP UP TRAY @ MASTER BEDROOM
24" STEP UP @ GREAT ROOM
DBL TRAY @ OFFICE (SOME FIELD FRAME WILL BE REQUIRED.)
9 1/4" STEP UP AT DINING & FOYER

OVERHANG: 24" CANTILEVER
12" CANTLIVER @ DORMER

LOADING: 40 PSF.
WIND LOAD: 130 MPH
EXPOSURE: C
EXT WALLS: 2 X 6 X 10' & 12'
DATE: 5/22/18

W.B. Howland Truss Co.
610 11TH STREET SW
Live Oak, FL 32064
(386) 362-1235
(386) 362-7124 (Fax)
howlandtruss@gmail.com

PAGE NO: 1 OF 1	JOB NO: 18-2262	Job Name: FREEMAN Customer: K&H FRAMING Designer: ROBERT GLOVER ADDRESS: SALESMAN: Fill in later : <Not Found>	JOB #: 18-2262	HOWLAND

Alpine, an ITW Company
6750 Forum Drive, Suite 305
Orlando, FL 32837
Phone: (800)755-6001
alpineitw.com

Site Information:

Customer: W. B. Howland Company, Inc.	Job Number: 18-2262
JobDescription: FREEMAN	
Address:	City, State, Zip:

Name, Address and License # of Structural EOR if one exists for the building:

Name:	License #:	State:
Address:	City, State, Zip:	

Job Engineering Criteria:

Design Code: FBC 2017 RES	View Version: 17.02.00.1013.16	JRef #: 1Wb72150004
Wind Standard: ASCE 7-10 Wind Speed (mph): 130	Roof Load (psf): 20.00-10.00- 0.00-10.00	Floor Load (psf): None

This package contains a job notes page, 97 truss drawings and 6 details.

Item	Seal #	Truss
1	144.18.0738.22510	A01
3	144.18.0739.03590	A03
5	144.18.0742.21250	A05
7	144.18.0742.38537	A07
9	144.18.0742.47840	A09
11	144.18.0742.52693	A11
13	144.18.0742.57563	B01
15	144.18.0743.17583	B03
17	144.18.0743.31940	B05
19	144.18.0743.45947	C01
21	144.18.0743.49780	D01
23	144.18.0743.53107	D03
25	144.18.0743.56310	D05
27	144.18.0743.59650	D07
29	144.18.0744.02877	D09
31	144.18.0744.05917	G01
33	144.18.0744.08570	G03
35	144.18.0744.12283	G05

Item	Seal #	Truss
2	144.18.0738.40207	A02
4	144.18.0742.02530	A04
6	144.18.0742.25690	A06
8	144.18.0742.43283	A08
10	144.18.0742.50247	A10
12	144.18.0742.55030	A12
14	144.18.0743.01997	B02
16	144.18.0743.23330	B04
18	144.18.0743.42120	B06
20	144.18.0743.47967	C02
22	144.18.0743.51450	D02
24	144.18.0743.54877	D04
26	144.18.0743.58073	D06
28	144.18.0744.01317	D08
30	144.18.0744.04303	D10
32	144.18.0744.07213	G02
34	144.18.0744.10210	G04
36	144.18.0744.14177	G06

This document has been electronically signed using a Digital Signature. Printed copies without an original signature must be verified using the original electronic version.

WILLIAM H. KRICK
LICENSE
No. 70861
STATE OF
FLORIDA
PROFESSIONAL ENGINEER

05/24/2018

Alpine, an ITW Company
6750 Forum Drive, Suite 305
Orlando, FL 32837
Phone: (800)755-6001
alpineitw.com

Site Information:

Customer: W. B. Howland Company, Inc.	Job Number: 18-2262
JobDescription: FREEMAN	
Address:	City, State, Zip:

Item	Seal #	Truss
37	144.18.0744.15710	H01
39	144.18.0744.18657	H03
41	144.18.0744.20807	J01
43	144.18.0744.23500	J05
45	144.18.0744.27153	J08
47	144.18.0744.31087	J10
49	144.18.0744.35893	J12
51	144.18.0744.39900	J14
53	144.18.0744.50530	J16
55	144.18.0744.57650	J18
57	144.18.0745.02073	J20
59	144.18.0745.06320	J22
61	144.18.0745.13987	J24
63	144.18.0745.23063	J26
65	144.18.0745.27377	J28
67	144.18.0745.34580	J30
69	144.18.0745.37170	J32
71	144.18.0745.40500	K02
73	144.18.0745.44053	M02
75	144.18.0748.24910	M04
77	144.18.0748.29877	P01
79	144.18.0748.34880	P03
81	144.18.0748.38830	V02
83	144.18.0748.41740	V04
85	144.18.0749.23560	V06
87	144.18.0749.29913	V08
89	144.18.0749.32533	V10
91	144.18.0749.34807	V12

Item	Seal #	Truss
38	144.18.0744.17553	H02
40	144.18.0744.19887	H04
42	144.18.0744.22060	J03
44	144.18.0744.25413	J07
46	144.18.0744.29407	J09
48	144.18.0744.33447	J11
50	144.18.0744.38057	J13
52	144.18.0744.41863	J15
54	144.18.0744.54357	J17
56	144.18.0744.59857	J19
58	144.18.0745.03957	J21
60	144.18.0745.08063	J23
62	144.18.0745.18067	J25
64	144.18.0745.25813	J27
66	144.18.0745.32913	J29
68	144.18.0745.35930	J31
70	144.18.0745.38543	K01
72	144.18.0745.42353	M01
74	144.18.0745.48977	M03
76	144.18.0748.27057	M05
78	144.18.0748.33193	P02
80	144.18.0748.37057	V01
82	144.18.0748.40390	V03
84	144.18.0748.42783	V05
86	144.18.0749.27733	V07
88	144.18.0749.31260	V09
90	144.18.0749.33687	V11
92	144.18.0749.35863	V13

This document has been electronically signed using a Digital Signature. Printed copies without an original signature must be verified using the original electronic version.

WILLIAM H. KRICK
LICENSE
No. 70861
STATE OF
FLORIDA
PROFESSIONAL ENGINEER

05/24/2018

Alpine, an ITW Company
6750 Forum Drive, Suite 305
Orlando, FL 32837
Phone: (800)755-6001
alpineitw.com

Site Information:

Customer: W. B. Howland Company, Inc.	*Job Number:* 18-2262
JobDescription: FREEMAN	
Address:	*City, State, Zip:*

Item	Seal #	Truss
93	144.18.0749.37020	V14
95	144.18.0749.39320	V16
97	144.18.0749.42520	V18

Item	Seal #	Truss
94	144.18.0749.38270	V15
96	144.18.0749.40460	V17

This document has been electronically signed using a Digital Signature. Printed copies without an original signature must be verified using the original electronic version.

WILLIAM H. KRICK
LICENSE
No. 70861
STATE OF
FLORIDA
PROFESSIONAL ENGINEER

05/24/2018

Job Number: 18-2262 FREEMAN **Truss Label:** A01	Ply: 1 Qty: 1	SEQN: 556317 / T21 SPEC FROM: CDM	Cust: R215 JRef: 1Wb72150004 DrwNo: 144.18.0738.22510 KM / BAF 05/24/2018

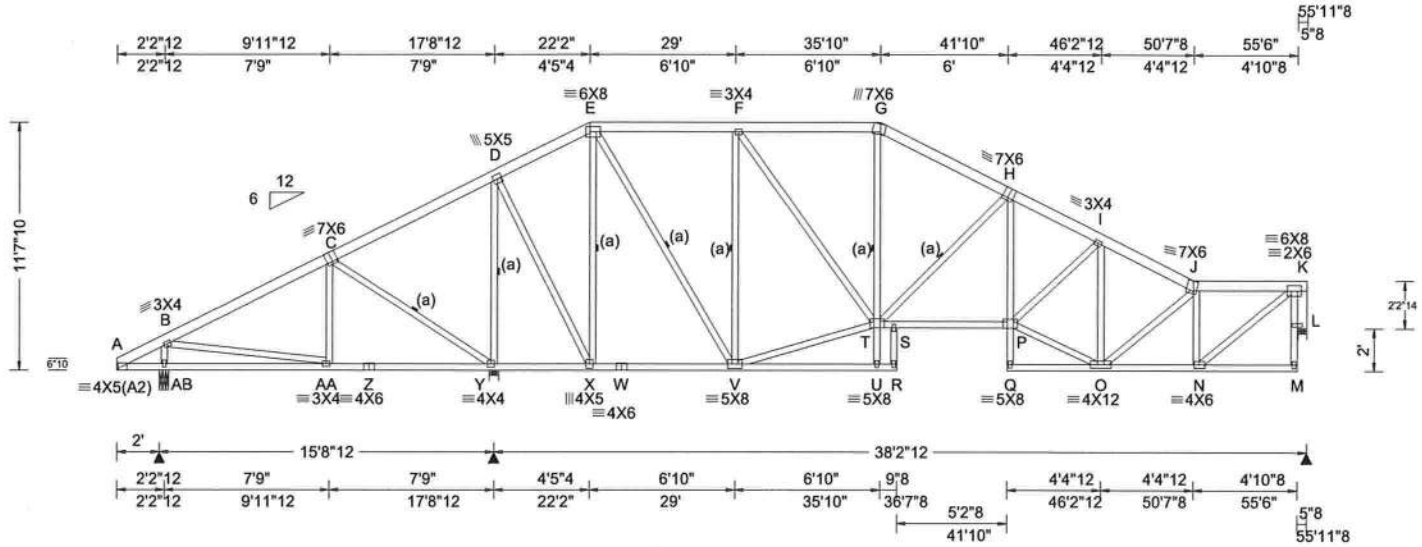

Loading Criteria (psf)	**Wind Criteria**	**Snow Criteria** (Pg,Pf in PSF)	**Defl/CSI Criteria**
TCLL: 20.00 TCDL: 10.00 BCLL: 0.00 BCDL: 10.00 Des Ld: 40.00 NCBCLL: 10.00 Soffit: 2.00 Load Duration: 1.25 Spacing: 24.0 "	Wind Std: ASCE 7-10 Speed: 130 mph Enclosure: Closed Risk Category: II EXP: C Mean Height: 16.09 ft TCDL: 5.0 psf BCDL: 5.0 psf MWFRS Parallel Dist: h to 2h C&C Dist a: 5.60 ft Loc. from endwall: not in 13.00 ft GCpi: 0.18 Wind Duration: 1.60	Pg: NA Ct: NA CAT: NA Pf: NA Ce: NA Lu: NA Cs: NA Snow Duration: NA **Code / Misc Criteria** Bldg Code: FBC 2017 RES TPI Std: 2014 Rep Factors Used: Yes FT/RT:20(0)/10(0) Plate Type(s): WAVE	PP Deflection in loc L/defl L/# VERT(LL): 0.122 P 999 240 VERT(TL): 0.408 P 999 180 HORZ(LL): 0.058 M - - HORZ(TL): 0.120 M - - Creep Factor: 2.0 Max TC CSI: 0.452 Max BC CSI: 0.994 Max Web CSI: 0.924 VIEW Ver: 17.02.00.1013.16

▲ Maximum Reactions (lbs)

Loc	R	/ U	/ Rw	/ Rh	/ RL	/ W
AB	617	/ 17	/ 404	/ -	/ 282	/ 5.3
Y	2650	/ 87	/ 1508	/ -	/ -	/ 5.5
L	1467	/ 40	/ 854	/ -	/ -	/ 5.0

Wind reactions based on MWFRS
AB Min Brg Width Req = 1.5
Y Min Brg Width Req = 2.8
L Min Brg Width Req = 5.0
Bearings AB, Y, & L are a rigid surface.

Members not listed have forces less than 375#

Maximum Top Chord Forces Per Ply (lbs)

Chords	Tens.	Comp.	Chords	Tens.	Comp.
C - D	695	-129	H - I	716	-2334
E - F	410	-865	I - J	579	-1932
F - G	542	-1389	J - K	458	-1556
G - H	552	-1630			

Maximum Bot Chord Forces Per Ply (lbs)

Chords	Tens.	Comp.	Chords	Tens.	Comp.
Y - X	203	-485	S - P	2039	-500
T - S	1997	-492	O - N	1644	-488

Maximum Web Forces Per Ply (lbs)

Webs	Tens.	Comp.	Webs	Tens.	Comp.
AB- B	225	-492	T - H	316	-907
C - Y	233	-698	H - P	636	-199
Y - D	635	-2127	P - I	487	-113
D - X	1524	-368	P - O	1866	-512
E - X	352	-1279	I - O	224	-777
E - V	1244	-356	J - N	391	-1174
V - F	365	-1157	N - K	1960	-575
V - T	894	-150	K - L	539	-1450
F - T	874	-221			

Lumber

Top chord 2x6 SP #2
Bot chord 2x4 SP #2
Webs 2x4 SP #3
:Rt Bearing Leg 2x6 SP #2:

Laterally brace BC above filler @ 24" O.C. (or as designed) Including a brace on BC directly above both ends of filler (if no rigid diaphragm exists at that point)

Bracing

(a) Continuous lateral restraint equally spaced on member.

Plating Notes

All plates are 2X4 except as noted.

Purlins

In lieu of structural panels use purlins to brace all flat TC @ 24" oc.

Wind

Wind loads based on MWFRS with additional C&C member design.

Right end vertical not exposed to wind pressure.

Left cantilever is exposed to wind

Additional Notes

WARNING: Furnish a copy of this DWG to the installation contractor. Special care must be taken during handling, shipping and installation of trusses. See "WARNING" note below.

The overall height of this truss excluding overhang is 11-7-10.

WILLIAM H. KRICK
LICENSE
No. 70861
STATE OF FLORIDA
PROFESSIONAL ENGINEER

COA #0 278
05/24/2018

****WARNING**** READ AND FOLLOW ALL NOTES ON THIS DRAWING!
****IMPORTANT**** FURNISH THIS DRAWING TO ALL CONTRACTORS INCLUDING THE INSTALLERS

Trusses require extreme care in fabricating, handling, shipping, installing and bracing. Refer to and follow the latest edition of BCSI (Building Component Safety Information, by TPI and SBCA) for safety practices prior to performing these functions. Installers shall provide temporary bracing per BCSI. Unless noted otherwise,top chord shall have properly attached structural sheathing and bottom chord shall have a properly attached rigid ceiling. Locations shown for permanent lateral restraint of webs shall have bracing installed per BCSI sections B3, B7, or B10, as applicable. Apply plates to each face of truss and position as shown above and on the Joint Details, unless noted otherwise. Refer to drawings 160A-Z for standard plate positions.

Alpine, a division of ITW Building Components Group Inc. shall not be responsible for any deviation from this drawing,any failure to build the truss in conformance with ANSI/TPI 1, or for handling, shipping, installation and bracing of trusses**A seal on this drawing or cover page listing this drawing, indicates acceptance of professional engineering responsibility solely for the design shown. The suitability and use of this drawing for any structure is the responsibility of the Building Designer per ANSI/TPI 1 Sec.2.**

For more information see this job's general notes page and these web sites: ALPINE: www.alpineitw.com; TPI: www.tpinst.org; SBCA: www.sbcindustry.com; ICC: www.iccsafe.org

ALPINE AN ITW COMPANY
6750 Forum Drive
Suite 305
Orlando FL, 32821

Job Number: 18-2262 FREEMAN **Truss Label:** A02	Ply: 1 Qty: 1	SEQN: 556320 / T22 COMN FROM: CDM	Cust: R215 JRef: 1Wb72150004 DrwNo: 144.18.0738.40207 KM / BAF 05/24/2018

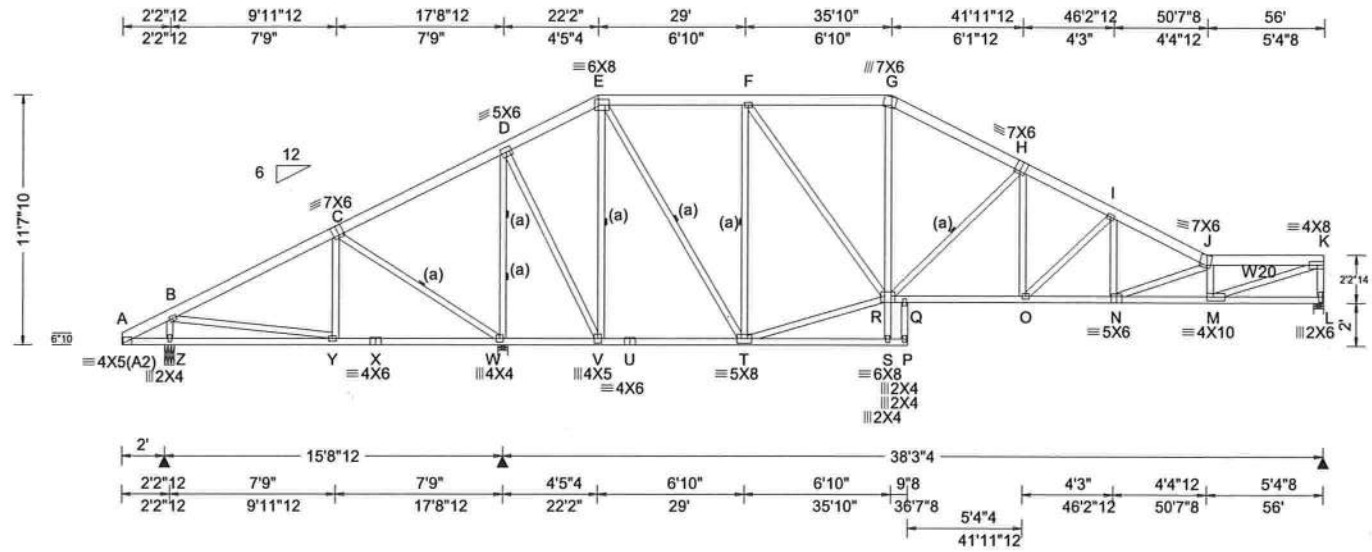

Loading Criteria (psf)	Wind Criteria	Snow Criteria (Pg,Pf in PSF)	Defl/CSI Criteria
TCLL: 20.00 TCDL: 10.00 BCLL: 0.00 BCDL: 10.00 Des Ld: 40.00 NCBCLL: 10.00 Soffit: 2.00 Load Duration: 1.25 Spacing: 24.0 "	Wind Std: ASCE 7-10 Speed: 130 mph Enclosure: Closed Risk Category: II EXP: C Mean Height: 16.09 ft TCDL: 5.0 psf BCDL: 5.0 psf MWFRS Parallel Dist: h to 2h C&C Dist a: 5.60 ft Loc. from endwall: not in 13.00 ft GCpi: 0.18 Wind Duration: 1.60	Pg: NA Ct: NA CAT: NA Pf: NA Ce: NA Lu: NA Cs: NA Snow Duration: NA **Code / Misc Criteria** Bldg Code: FBC 2017 RES TPI Std: 2014 Rep Factors Used: Yes FT/RT:20(0)/10(0) Plate Type(s): WAVE	PP Deflection in loc L/defl L/# VERT(LL): 0.169 O 999 240 VERT(TL): 0.564 O 999 180 HORZ(LL): 0.044 L - - HORZ(TL): 0.093 L - - Creep Factor: 2.0 Max TC CSI: 0.524 Max BC CSI: 0.831 Max Web CSI: 0.971 VIEW Ver: 17.02.00.1013.16

▲ Maximum Reactions (lbs)

Loc	R	/ U	/ Rw	/ Rh	/ RL	/ W
Z	505	/ 84	/ 306	/ -	/ 282	/ 5.3
W	2970	/ 95	/ 1652	/ -	/ -	/ 5.5
L	1378	/ 37	/ 806	/ -	/ -	/ 5.5

Wind reactions based on MWFRS
Z Min Brg Width Req = 1.5
W Min Brg Width Req = 3.1
L Min Brg Width Req = 1.6
Bearings Z, W, & L are a rigid surface.

Members not listed have forces less than 375#

Maximum Top Chord Forces Per Ply (lbs)

Chords	Tens.	Comp.	Chords	Tens.	Comp.
B - C	587	-168	G - H	498	-1446
C - D	1115	-257	H - I	657	-2127
E - F	358	-666	I - J	801	-2734
F - G	500	-1222	J - K	931	-3153

Maximum Bot Chord Forces Per Ply (lbs)

Chords	Tens.	Comp.	Chords	Tens.	Comp.
Y - X	241	-495	Q - O	1836	-449
X - W	241	-495	O - N	2381	-656
W - V	299	-854	N - M	3321	-989
R - Q	1808	-444			

Maximum Web Forces Per Ply (lbs)

Webs	Tens.	Comp.	Webs	Tens.	Comp.
Z - B	208	-380	F - R	927	-236
B - Y	257	-496	R - H	304	-857
C - W	248	-755	H - O	589	-187
W - D	724	-2415	O - I	307	-745
D - V	1778	-435	I - N	507	-140
E - V	411	-1506	N - J	357	-1000
E - T	1362	-388	J - M	371	-1082
T - F	378	-1203	M - K	3338	-987
T - R	691	-97	K - L	420	-1321

Lumber

Top chord 2x6 SP #2
Bot chord 2x4 SP #2
Webs 2x4 SP #3 :W20 2x4 SP #2:

Bracing

(a) Continuous lateral restraint equally spaced on member.

Plating Notes

All plates are 3X4 except as noted.

Purlins

In lieu of structural panels use purlins to brace all flat TC @ 24" oc.

Wind

Wind loads based on MWFRS with additional C&C member design.

Right end vertical not exposed to wind pressure.

Left cantilever is exposed to wind

Additional Notes

WARNING: Furnish a copy of this DWG to the installation contractor. Special care must be taken during handling, shipping and installation of trusses. See "WARNING" note below.

The overall height of this truss excluding overhang is 11-7-10.

Laterally brace BC above filler @ 24" O.C. (or as designed) Including a brace on BC directly above both ends of filler (if no rigid diaphragm exists at that point)

WILLIAM H. KRICK
LICENSE
No. 70861
STATE OF FLORIDA
PROFESSIONAL ENGINEER

COA #0 278

05/24/2018

****WARNING**** READ AND FOLLOW ALL NOTES ON THIS DRAWING!
****IMPORTANT**** FURNISH THIS DRAWING TO ALL CONTRACTORS INCLUDING THE INSTALLERS

Trusses require extreme care in fabricating, handling, shipping, installing and bracing. Refer to and follow the latest edition of BCSI (Building Component Safety Information, by TPI and SBCA) for safety practices prior to performing these functions. Installers shall provide temporary bracing per BCSI. Unless noted otherwise,top chord shall have properly attached structural sheathing and bottom chord shall have a properly attached rigid ceiling. Locations shown for permanent lateral restraint of webs shall have bracing installed per BCSI sections B3, B7, or B10, as applicable. Apply plates to each face of truss and position as shown above and on the Joint Details, unless noted otherwise. Refer to drawings 160A-Z for standard plate positions.

Alpine, a division of ITW Building Components Group Inc. shall not be responsible for any deviation from this drawing,any failure to build the truss in conformance with ANSI/TPI 1, or for handling, shipping, installation and bracing of trusses**A seal on this drawing or cover page listing this drawing, indicates acceptance of professional engineering responsibility solely for the design shown. The suitability and use of this drawing for any structure is the responsibility of the Building Designer per ANSI/TPI 1 Sec.2.**

For more information see this job's general notes page and these web sites: ALPINE: www.alpineitw.com; TPI: www.tpinst.org; SBCA: www.sbcindustry.com; ICC: www.iccsafe.org

ALPINE
AN ITW COMPANY
6750 Forum Drive
Suite 305
Orlando FL, 32821

Job Number: 18-2262 FREEMAN **Truss Label:** A03	Ply: 1 Qty: 4	SEQN: 556322 / T31 COMN FROM: CDM	Cust: R215 JRef: 1Wb72150004 DrwNo: 144.18.0739.03590 KM / BAF 05/24/2018

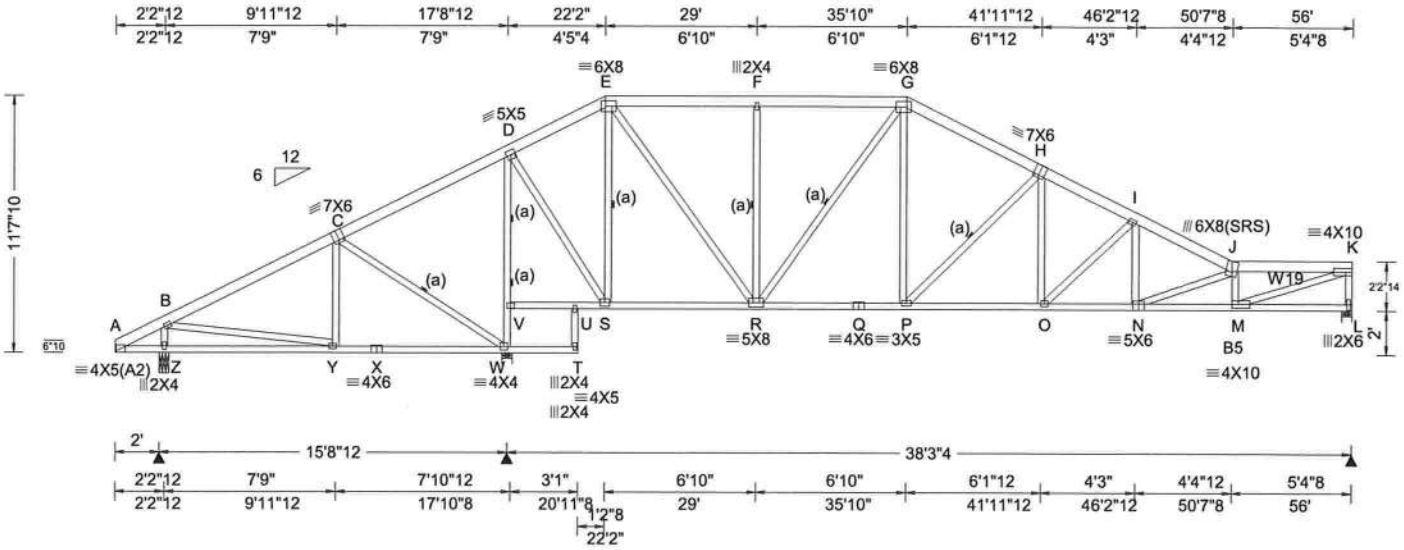

Loading Criteria (psf)
TCLL: 20.00
TCDL: 10.00
BCLL: 0.00
BCDL: 10.00
Des Ld: 40.00
NCBCLL: 10.00
Soffit: 2.00
Load Duration: 1.25
Spacing: 24.0 "

Wind Criteria
Wind Std: ASCE 7-10
Speed: 130 mph
Enclosure: Closed
Risk Category: II
EXP: C
Mean Height: 16.09 ft
TCDL: 5.0 psf
BCDL: 5.0 psf
MWFRS Parallel Dist: h to 2h
C&C Dist a: 5.60 ft
Loc. from endwall: not in 13.00 ft
GCpi: 0.18
Wind Duration: 1.60

Snow Criteria (Pg,Pf in PSF)
Pg: NA Ct: NA CAT: NA
Pf: NA Ce: NA
Lu: NA Cs: NA
Snow Duration: NA

Code / Misc Criteria
Bldg Code: FBC 2017 RES
TPI Std: 2014
Rep Factors Used: Yes
FT/RT:20(0)/10(0)
Plate Type(s):
WAVE

Defl/CSI Criteria

PP Deflection in	loc	L/defl	L/#
VERT(LL): 0.215	O	999	240
VERT(TL): 0.621	O	999	180
HORZ(LL): -0.037	S	-	-
HORZ(TL): 0.069	S	-	-

Creep Factor: 2.0
Max TC CSI: 0.443
Max BC CSI: 0.918
Max Web CSI: 0.955

VIEW Ver: 17.02.00.1013.16

▲ Maximum Reactions (lbs)

Loc	R	/ U	/ Rw	/ Rh	/ RL	/ W
Z	771	/ 20	/ 469	/ -	/ 282	/ 5.3
W	2668	/ 105	/ 1424	/ -	/ -	/ 5.5
L	1695	/ 48	/ 941	/ -	/ -	/ 5.5

Wind reactions based on MWFRS
Z Min Brg Width Req = 1.5
W Min Brg Width Req = 2.8
L Min Brg Width Req = 1.5
Bearings Z, W, & L are a rigid surface.

Members not listed have forces less than 375#

Maximum Top Chord Forces Per Ply (lbs)

Chords	Tens.	Comp.	Chords	Tens.	Comp.
B - C	191	-601	G - H	661	-2181
D - E	397	-900	H - I	827	-2945
E - F	572	-1565	I - J	979	-3584
F - G	572	-1565	J - K	1106	-3993

Maximum Bot Chord Forces Per Ply (lbs)

Chords	Tens.	Comp.	Chords	Tens.	Comp.
Y - X	442	-140	Q - P	1879	-382
X - W	442	-140	P - O	2562	-601
S - R	746	-110	O - N	3143	-814
R - Q	1879	-382	N - M	4211	-1174

Maximum Web Forces Per Ply (lbs)

Webs	Tens.	Comp.	Webs	Tens.	Comp.
Z - B	297	-640	G - P	953	-205
C - W	202	-623	P - H	317	-972
W - V	516	-2106	H - O	726	-206
V - D	515	-2112	O - I	317	-790
D - S	1531	-246	I - N	544	-148
E - S	231	-1061	N - J	385	-1137
E - R	1387	-330	J - M	438	-1402
F - R	191	-448	M - K	4230	-1172
R - G	128	-533	K - L	484	-1632

Lumber
Top chord 2x6 SP #2
Bot chord 2x4 SP #2 :B5 2x4 SP M-31:
Webs 2x4 SP #3 :W19 2x4 SP #2:

Bracing
(a) Continuous lateral restraint equally spaced on member.

Plating Notes
All plates are 3X4 except as noted.

Loading
Truss passed check for 20 psf additional bottom chord live load in areas with 42"-high x 24"-wide clearance.

Purlins
In lieu of structural panels use purlins to brace all flat TC @ 24" oc.

Wind
Wind loads based on MWFRS with additional C&C member design.
Right end vertical not exposed to wind pressure.
Left cantilever is exposed to wind
Laterally brace BC above filler @ 24" O.C. (or as designed) Including a brace on BC directly above both ends of filler (if no rigid diaphragm exists at that point)

Additional Notes
WARNING: Furnish a copy of this DWG to the installation contractor. Special care must be taken during handling, shipping and installation of trusses. See "WARNING" note below.
The overall height of this truss excluding overhang is 11-7-10.

WILLIAM H. KRICK
LICENSE
No. 70861
STATE OF FLORIDA
PROFESSIONAL ENGINEER

COA #0,278

05/24/2018

****WARNING**** READ AND FOLLOW ALL NOTES ON THIS DRAWING!
****IMPORTANT**** FURNISH THIS DRAWING TO ALL CONTRACTORS INCLUDING THE INSTALLERS

Trusses require extreme care in fabricating, handling, shipping, installing and bracing. Refer to and follow the latest edition of BCSI (Building Component Safety Information, by TPI and SBCA) for safety practices prior to performing these functions. Installers shall provide temporary bracing per BCSI. Unless noted otherwise,top chord shall have properly attached structural sheathing and bottom chord shall have a properly attached rigid ceiling. Locations shown for permanent lateral restraint of webs shall have bracing installed per BCSI sections B3, B7, or B10, as applicable. Apply plates to each face of truss and position as shown above and on the Joint Details, unless noted otherwise. Refer to drawings 160A-Z for standard plate positions.

Alpine, a division of ITW Building Components Group Inc. shall not be responsible for any deviation from this drawing,any failure to build the truss in conformance with ANSI/TPI 1, or for handling, shipping, installation and bracing of trusses**A seal on this drawing or cover page listing this drawing, indicates acceptance of professional engineering responsibility solely for the design shown. The suitability and use of this drawing for any structure is the responsibility of the Building Designer per ANSI/TPI 1 Sec.2.**

For more information see this job's general notes page and these web sites: ALPINE: www.alpineitw.com; TPI: www.tpinst.org; SBCA: www.sbcindustry.com; ICC: www.iccsafe.org

ALPINE AN ITW COMPANY
6750 Forum Drive
Suite 305
Orlando FL, 32821

Job Number: 18-2262 FREEMAN **Truss Label:** A04	Ply: 1 Qty: 2	SEQN: 556327 / T38 COMN FROM: CDM	Cust: R215 JRef: 1Wb72150004 DrwNo: 144.18.0742.02530 KM / BAF 05/24/2018

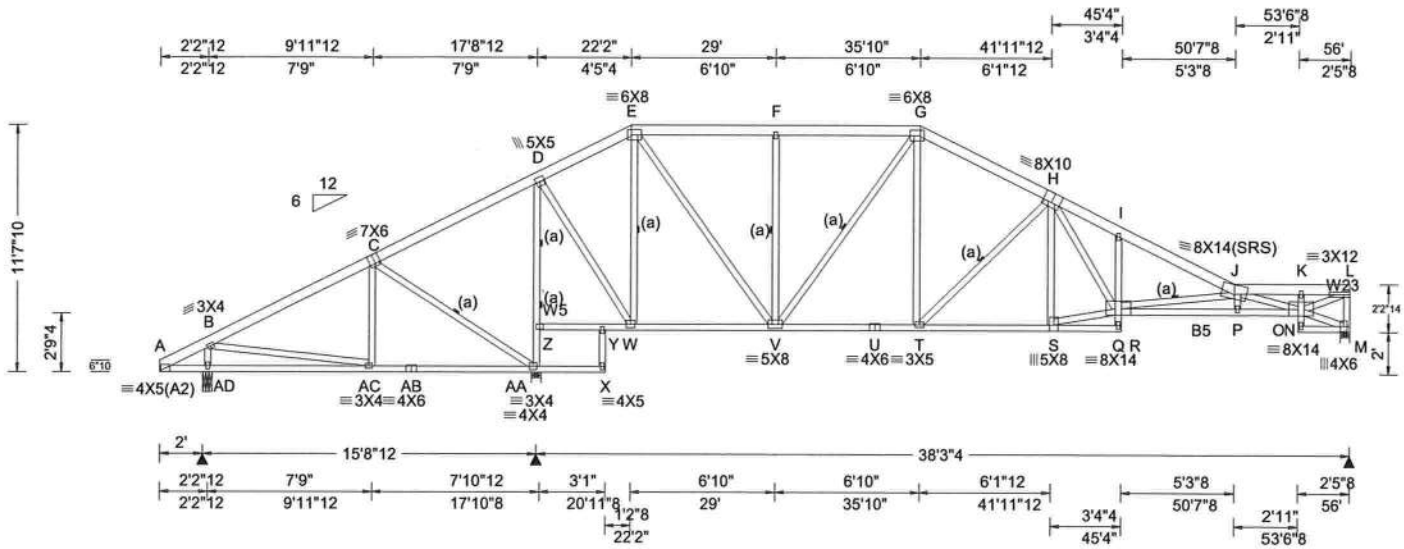

Loading Criteria (psf)

TCLL: 20.00
TCDL: 10.00
BCLL: 0.00
BCDL: 10.00
Des Ld: 40.00
NCBCLL: 10.00
Soffit: 2.00
Load Duration: 1.25
Spacing: 24.0 "

Wind Criteria

Wind Std: ASCE 7-10
Speed: 130 mph
Enclosure: Closed
Risk Category: II
EXP: C
Mean Height: 16.09 ft
TCDL: 5.0 psf
BCDL: 5.0 psf
MWFRS Parallel Dist: h to 2h
C&C Dist a: 5.60 ft
Loc. from endwall: not in 13.00 ft
GCpi: 0.18
Wind Duration: 1.60

Snow Criteria (Pg,Pf in PSF)

Pg: NA Ct: NA CAT: NA
Pf: NA Ce: NA
Lu: NA Cs: NA
Snow Duration: NA

Code / Misc Criteria

Bldg Code: FBC 2017 RES
TPI Std: 2014
Rep Factors Used: Yes
FT/RT:20(0)/10(0)
Plate Type(s):
WAVE

Defl/CSI Criteria

PP Deflection in	loc	L/defl	L/#
VERT(LL): 0.359	I	999	240
VERT(TL): 1.038	I	684	180
HORZ(LL): -0.072	W	-	-
HORZ(TL): 0.134	W	-	-

Creep Factor: 2.0
Max TC CSI: 0.610
Max BC CSI: 0.903
Max Web CSI: 0.978

VIEW Ver: 17.02.00.1013.16

▲ Maximum Reactions (lbs)

Loc	R	/ U	/ Rw	/ Rh	/ RL	/ W
AD	753	/ 18	/ 457	/ -	/ 282	/ 5.3
AA	2712	/ 104	/ 1440	/ -	/ -	/ 5.5
M	1682	/ 46	/ 932	/ -	/ -	/ 5.5

Wind reactions based on MWFRS
AD Min Brg Width Req = 1.5
AA Min Brg Width Req = 2.8
M Min Brg Width Req = 2.0
Bearings AD, AA, & M are a rigid surface.

Members not listed have forces less than 375#

Maximum Top Chord Forces Per Ply (lbs)

Chords	Tens.	Comp.	Chords	Tens.	Comp.
B - C	177	-570	H - I	1222	-4192
D - E	385	-852	I - J	1122	-4202
E - F	562	-1528	J - K	1080	-3844
F - G	562	-1528	K - L	1040	-3704
G - H	651	-2152			

Maximum Bot Chord Forces Per Ply (lbs)

Chords	Tens.	Comp.	Chords	Tens.	Comp.
AC-AB	414	-127	U - T	1852	-375
AB-AA	414	-127	T - S	2555	-599
W - V	699	-98	Q - P	6788	-1884
V - U	1852	-375	P - N	6725	-1860

Maximum Web Forces Per Ply (lbs)

Webs	Tens.	Comp.	Webs	Tens.	Comp.
AD- B	289	-623	T - H	319	-984
C -AA	201	-622	H - S	187	-564
AA- Z	526	-2142	H - Q	2232	-688
Z - D	524	-2145	S - Q	2569	-597
D - W	1550	-251	Q - I	212	-377
E - W	237	-1087	Q - J	951	-3092
E - V	1404	-334	J - P	201	-545
F - V	191	-448	J - N	811	-2995
V - G	132	-549	N - L	3992	-1121
G - T	946	-201	L - M	466	-1604

Lumber

Top chord 2x6 SP #2
Bot chord 2x4 SP #2 :B5 2x4 SP M-31:
Webs 2x4 SP #3 :W5, W23 2x4 SP #2:

Bracing

(a) Continuous lateral restraint equally spaced on member.

Plating Notes

All plates are 2X4 except as noted.

Loading

Truss passed check for 20 psf additional bottom chord live load in areas with 42"-high x 24"-wide clearance.

Purlins

In lieu of structural panels use purlins to brace all flat TC @ 24" oc.

Wind

Wind loads based on MWFRS with additional C&C member design.

Right end vertical not exposed to wind pressure.

Left cantilever is exposed to wind

Laterally brace BC above filler @ 24" O.C. (or as designed) Including a brace on BC directly above both ends of filler (if no rigid diaphragm exists at that point)

Additional Notes

WARNING: Furnish a copy of this DWG to the installation contractor. Special care must be taken during handling, shipping and installation of trusses. See "WARNING" note below.

The overall height of this truss excluding overhang is 11-7-10.

WILLIAM H. KRICK
LICENSE
No. 70861
STATE OF FLORIDA
PROFESSIONAL ENGINEER

COA #0 278

05/24/2018

****WARNING**** READ AND FOLLOW ALL NOTES ON THIS DRAWING!
****IMPORTANT**** FURNISH THIS DRAWING TO ALL CONTRACTORS INCLUDING THE INSTALLERS

Trusses require extreme care in fabricating, handling, shipping, installing and bracing. Refer to and follow the latest edition of BCSI (Building Component Safety Information, by TPI and SBCA) for safety practices prior to performing these functions. Installers shall provide temporary bracing per BCSI. Unless noted otherwise,top chord shall have properly attached structural sheathing and bottom chord shall have a properly attached rigid ceiling. Locations shown for permanent lateral restraint of webs shall have bracing installed per BCSI sections B3, B7, or B10, as applicable. Apply plates to each face of truss and position as shown above and on the Joint Details, unless noted otherwise. Refer to drawings 160A-Z for standard plate positions.

Alpine, a division of ITW Building Components Group Inc. shall not be responsible for any deviation from this drawing,any failure to build the truss in conformance with ANSI/TPI 1, or for handling, shipping, installation and bracing of trusses**A seal on this drawing or cover page listing this drawing, indicates acceptance of professional engineering responsibility solely for the design shown. The suitability and use of this drawing for any structure is the responsibility of the Building Designer per ANSI/TPI 1 Sec.2.**

For more information see this job's general notes page and these web sites: ALPINE: www.alpineitw.com; TPI: www.tpinst.org; SBCA: www.sbcindustry.com; ICC: www.iccsafe.org

ALPINE
AN ITW COMPANY
6750 Forum Drive
Suite 305
Orlando FL, 32821

Job Number: 18-2262 FREEMAN **Truss Label:** A05	Ply: 1 Qty: 1	SEQN: 556329 / T34 COMN FROM: CDM	Cust: R215 JRef: 1Wb72150004 DrwNo: 144.18.0742.21250 KM / BAF 05/24/2018

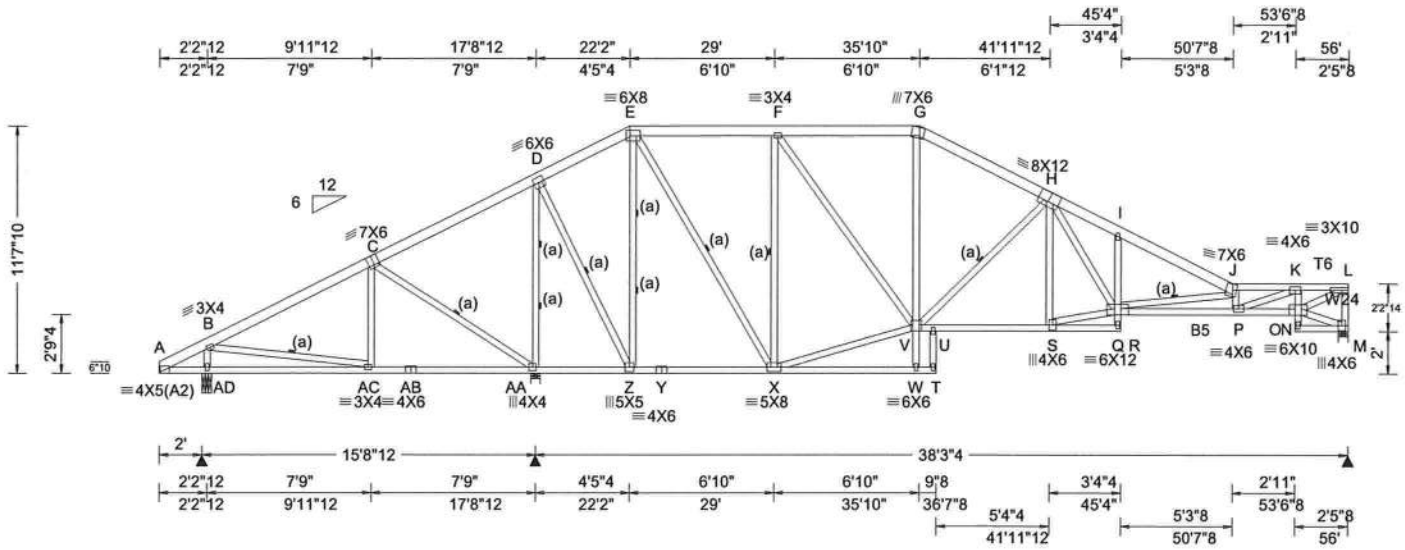

Loading Criteria (psf)

TCLL:	20.00
TCDL:	10.00
BCLL:	0.00
BCDL:	10.00
Des Ld:	40.00
NCBCLL:	10.00
Soffit:	2.00

Load Duration: 1.25
Spacing: 24.0 "

Wind Criteria
Wind Std: ASCE 7-10
Speed: 130 mph
Enclosure: Closed
Risk Category: II
EXP: C
Mean Height: 16.09 ft
TCDL: 5.0 psf
BCDL: 5.0 psf
MWFRS Parallel Dist: h to 2h
C&C Dist a: 5.60 ft
Loc. from endwall: not in 13.00 ft
GCpi: 0.18
Wind Duration: 1.60

Snow Criteria (Pg,Pf in PSF)
Pg: NA Ct: NA CAT: NA
Pf: NA Ce: NA
Lu: NA Cs: NA
Snow Duration: NA

Code / Misc Criteria
Bldg Code: FBC 2017 RES
TPI Std: 2014
Rep Factors Used: Yes
FT/RT:20(0)/10(0)
Plate Type(s):
WAVE

Defl/CSI Criteria

PP Deflection in	loc	L/defl	L/#
VERT(LL): 0.245	I	999	240
VERT(TL): 0.819	I	904	180
HORZ(LL): 0.089	M	-	-
HORZ(TL): 0.184	M	-	-

Creep Factor: 2.0
Max TC CSI: 0.779
Max BC CSI: 0.715
Max Web CSI: 0.970

VIEW Ver: 17.02.00.1013.16

▲ Maximum Reactions (lbs)

Loc	R	/ U	/ Rw	/ Rh	/ RL	/ W
AD	352	/ 395	/ 218	/ -	/ 282	/ 5.3
AA	3400	/ 105	/ 1834	/ -	/ -	/ 5.5
M	1254	/ 32	/ 730	/ -	/ -	/ 5.5

Wind reactions based on MWFRS
AD Min Brg Width Req = 1.5
AA Min Brg Width Req = 3.6
M Min Brg Width Req = 1.5
Bearings AD, AA, & M are a rigid surface.

Members not listed have forces less than 375#

Maximum Top Chord Forces Per Ply (lbs)

Chords	Tens.	Comp.	Chords	Tens.	Comp.
B - C	1106	-322	H - I	889	-2750
C - D	1701	-433	I - J	793	-2781
D - E	543	-9	J - K	1319	-4522
F - G	429	-947	K - L	787	-2626
G - H	416	-1143			

Maximum Bot Chord Forces Per Ply (lbs)

Chords	Tens.	Comp.	Chords	Tens.	Comp.
AC-AB	248	-960	V - U	1550	-377
AB-AA	248	-960	U - S	1573	-380
AA- Z	453	-1371	Q - P	4794	-1409
Z - Y	221	-446	P - N	2804	-842
Y - X	221	-446			

Maximum Web Forces Per Ply (lbs)

Webs	Tens.	Comp.	Webs	Tens.	Comp.
AD- B	513	-229	V - H	302	-858
B -AC	386	-932	H - S	136	-386
AC- C	426	-39	H - Q	1652	-552
C -AA	269	-834	S - Q	1577	-377
AA- D	839	-2799	Q - J	773	-2381
D - Z	2115	-530	J - P	357	-1073
E - Z	497	-1810	P - K	1891	-525
E - X	1507	-425	K - N	288	-915
X - F	386	-1236	N - L	2849	-854
X - V	382	-40	L - M	370	-1187
F - V	965	-246			

Lumber

Top chord 2x6 SP #2 :T6 2x4 SP #2:
Bot chord 2x4 SP #2 :B5 2x4 SP M-31:
Webs 2x4 SP #3 :W24 2x4 SP #2:

Bracing

(a) Continuous lateral restraint equally spaced on member.

Plating Notes

All plates are 2X4 except as noted.

Purlins

In lieu of structural panels use purlins to brace all flat TC @ 24" oc.

Wind

Wind loads based on MWFRS with additional C&C member design.

Right end vertical not exposed to wind pressure.

Left cantilever is exposed to wind

Additional Notes

Negative reaction(s) of -395# MAX. from a non-wind load case requires uplift connection. See Maximum Reactions.

WARNING: Furnish a copy of this DWG to the installation contractor. Special care must be taken during handling, shipping and installation of trusses. See "WARNING" note below.

The overall height of this truss excluding overhang is 11-7-10.

Laterally brace BC above filler @ 24" O.C. (or as designed) Including a brace on BC directly above both ends of filler (if no rigid diaphragm exists at that point)

WILLIAM H. KRICK
LICENSE
No. 70861
STATE OF FLORIDA
PROFESSIONAL ENGINEER

COA #0278

05/24/2018

****WARNING**** READ AND FOLLOW ALL NOTES ON THIS DRAWING!
****IMPORTANT**** FURNISH THIS DRAWING TO ALL CONTRACTORS INCLUDING THE INSTALLERS

Trusses require extreme care in fabricating, handling, shipping, installing and bracing. Refer to and follow the latest edition of BCSI (Building Component Safety Information, by TPI and SBCA) for safety practices prior to performing these functions. Installers shall provide temporary bracing per BCSI. Unless noted otherwise,top chord shall have properly attached structural sheathing and bottom chord shall have a properly attached rigid ceiling. Locations shown for permanent lateral restraint of webs shall have bracing installed per BCSI sections B3, B7, or B10, as applicable. Apply plates to each face of truss and position as shown above and on the Joint Details, unless noted otherwise. Refer to drawings 160A-Z for standard plate positions.

Alpine, a division of ITW Building Components Group Inc. shall not be responsible for any deviation from this drawing,any failure to build the truss in conformance with ANSI/TPI 1, or for handling, shipping, installation and bracing of trusses**A seal on this drawing or cover page listing this drawing, indicates acceptance of professional engineering responsibility solely for the design shown. The suitability and use of this drawing for any structure is the responsibility of the Building Designer per ANSI/TPI 1 Sec.2.**

For more information see this job's general notes page and these web sites: ALPINE: www.alpineitw.com; TPI: www.tpinst.org; SBCA: www.sbcindustry.com; ICC: www.iccsafe.org

ALPINE AN ITW COMPANY
6750 Forum Drive
Suite 305
Orlando FL, 32821

Job Number: 18-2262 FREEMAN **Truss Label:** A06	Ply: 1 Qty: 1	SEQN: 556342 / T45 COMN FROM: CDM	Cust: R215 JRef: 1Wb72150004 DrwNo: 144.18.0742.25690 KM / BAF 05/24/2018

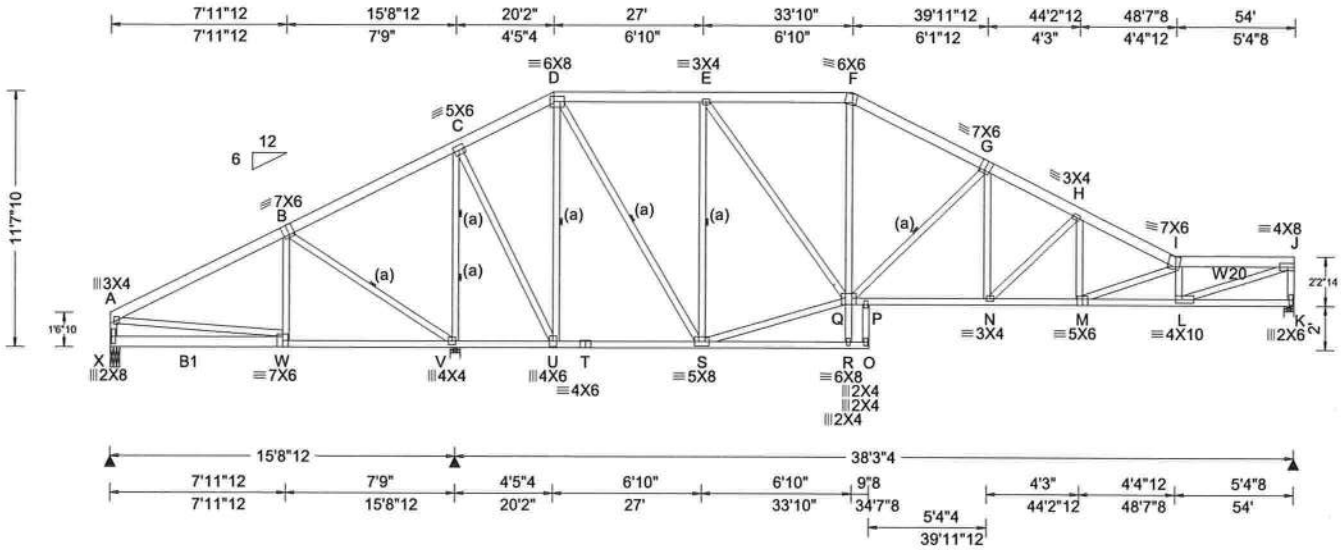

Loading Criteria (psf)
TCLL: 20.00
TCDL: 10.00
BCLL: 0.00
BCDL: 10.00
Des Ld: 40.00
NCBCLL: 10.00
Soffit: 2.00
Load Duration: 1.25
Spacing: 24.0 "

Wind Criteria
Wind Std: ASCE 7-10
Speed: 130 mph
Enclosure: Closed
Risk Category: II
EXP: C
Mean Height: 16.59 ft
TCDL: 5.0 psf
BCDL: 5.0 psf
MWFRS Parallel Dist: h to 2h
C&C Dist a: 5.40 ft
Loc. from endwall: not in 13.00 ft
GCpi: 0.18
Wind Duration: 1.60

Snow Criteria (Pg,Pf in PSF)
Pg: NA Ct: NA CAT: NA
Pf: NA Ce: NA
Lu: NA Cs: NA
Snow Duration: NA

Code / Misc Criteria
Bldg Code: FBC 2017 RES
TPI Std: 2014
Rep Factors Used: Yes
FT/RT:20(0)/10(0)
Plate Type(s):
WAVE

Defl/CSI Criteria

PP Deflection in	loc	L/defl	L/#
VERT(LL): 0.170	N	999	240
VERT(TL): 0.558	N	999	180
HORZ(LL): 0.044	K	-	-
HORZ(TL): 0.091	K	-	-

Creep Factor: 2.0
Max TC CSI: 0.677
Max BC CSI: 0.914
Max Web CSI: 0.979

VIEW Ver: 17.02.00.1013.16

▲ Maximum Reactions (lbs)

Loc	R	/ U	/ Rw	/ Rh	/ RL	/ W
X	476	/ 62	/ 135	/ -	/ 262	/ 5.3
V	3016	/ 573	/ 1666	/ -	/ -	/ 5.5
K	1377	/ 270	/ 805	/ -	/ -	/ 5.5

Wind reactions based on MWFRS
X Min Brg Width Req = 1.5
V Min Brg Width Req = 3.2
K Min Brg Width Req = 1.6
Bearings X, V, & K are a rigid surface.

Members not listed have forces less than 375#

Maximum Top Chord Forces Per Ply (lbs)

Chords	Tens.	Comp.	Chords	Tens.	Comp.
A - B	550	-208	F - G	498	-1444
B - C	1131	-260	G - H	657	-2125
D - E	355	-664	H - I	802	-2732
E - F	500	-1220	I - J	934	-3151

Maximum Bot Chord Forces Per Ply (lbs)

Chords	Tens.	Comp.	Chords	Tens.	Comp.
W - V	259	-459	P - N	1834	-448
V - U	308	-873	N - M	2379	-656
Q - P	1806	-443	M - L	3319	-992

Maximum Web Forces Per Ply (lbs)

Webs	Tens.	Comp.	Webs	Tens.	Comp.
A - W	202	-473	Q - G	304	-857
B - V	300	-827	G - N	588	-187
V - C	724	-2419	N - H	307	-745
C - U	1795	-447	H - M	507	-141
D - U	422	-1520	M - I	360	-1000
D - S	1366	-390	I - L	372	-1082
S - E	379	-1203	L - J	3335	-990
S - Q	689	-138	J - K	421	-1320
E - Q	928	-238			

Lumber
Top chord 2x6 SP #2
Bot chord 2x4 SP #2 :B1 2x6 SP #2:
Webs 2x4 SP #3 :W20 2x4 SP #2:

Bracing
(a) Continuous lateral restraint equally spaced on member.

Special Loads
------(Lumber Dur.Fac.=1.25 / Plate Dur.Fac.=1.25)
TC: From 62 plf at 0.00 to 62 plf at 54.00
BC: From 10 plf at 0.00 to 10 plf at 2.65
BC: From 20 plf at 2.65 to 20 plf at 54.00
BC: 107 lb Conc. Load at 0.65
BC: 108 lb Conc. Load at 2.65

Purlins
In lieu of structural panels use purlins to brace all flat TC @ 24" oc.

Wind
Wind loads based on MWFRS.
Right end vertical not exposed to wind pressure.

Additional Notes
WARNING: Furnish a copy of this DWG to the installation contractor. Special care must be taken during handling, shipping and installation of trusses. See "WARNING" note below.
The overall height of this truss excluding overhang is 11-7-10.

Laterally brace BC above filler @ 24" O.C. (or as designed) Including a brace on BC directly above both ends of filler (if no rigid diaphragm exists at that point)

WILLIAM H. KRICK
LICENSE
No. 70861
STATE OF FLORIDA
PROFESSIONAL ENGINEER

COA #0278

05/24/2018

****WARNING**** READ AND FOLLOW ALL NOTES ON THIS DRAWING!
****IMPORTANT**** FURNISH THIS DRAWING TO ALL CONTRACTORS INCLUDING THE INSTALLERS

Trusses require extreme care in fabricating, handling, shipping, installing and bracing. Refer to and follow the latest edition of BCSI (Building Component Safety Information, by TPI and SBCA) for safety practices prior to performing these functions. Installers shall provide temporary bracing per BCSI. Unless noted otherwise,top chord shall have properly attached structural sheathing and bottom chord shall have a properly attached rigid ceiling. Locations shown for permanent lateral restraint of webs shall have bracing installed per BCSI sections B3, B7, or B10, as applicable. Apply plates to each face of truss and position as shown above and on the Joint Details, unless noted otherwise. Refer to drawings 160A-Z for standard plate positions.

Alpine, a division of ITW Building Components Group Inc. shall not be responsible for any deviation from this drawing,any failure to build the truss in conformance with ANSI/TPI 1, or for handling, shipping, installation and bracing of trusses**A seal on this drawing or cover page listing this drawing, indicates acceptance of professional engineering responsibility solely for the design shown. The suitability and use of this drawing for any structure is the responsibility of the Building Designer per ANSI/TPI 1 Sec.2.**

For more information see this job's general notes page and these web sites: ALPINE: www.alpineitw.com; TPI: www.tpinst.org; SBCA: www.sbcindustry.com; ICC: www.iccsafe.org

ALPINE™ AN ITW COMPANY
6750 Forum Drive
Suite 305
Orlando FL, 32821

Job Number: 18-2262 FREEMAN **Truss Label:** A07	Ply: 2 Qty: 4	SEQN: 556361 / T35 COMN FROM: CDM	Cust: R215 JRef: 1Wb72150004 DrwNo: 144.18.0742.38537 KM / BAF 05/24/2018

2 Complete Trusses Required

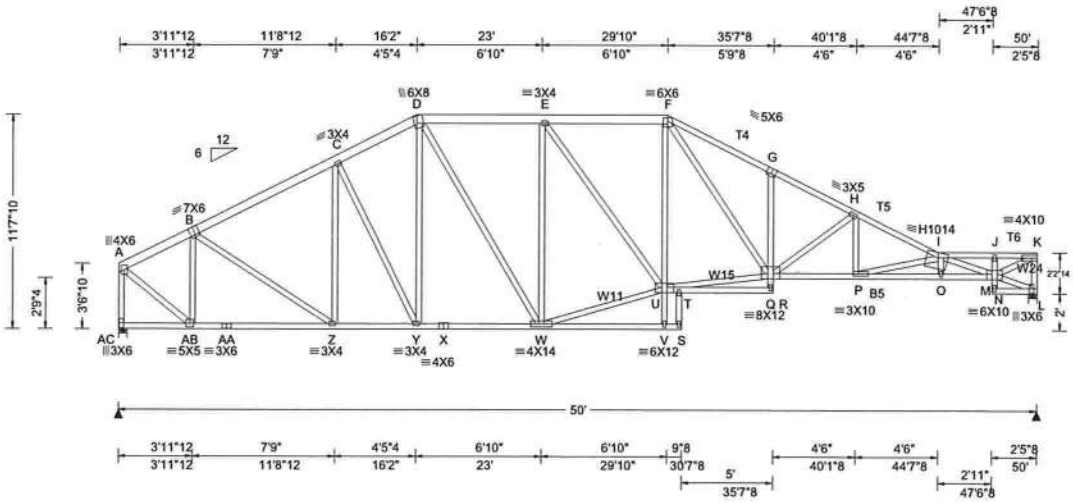

Loading Criteria (psf)

TCLL: 20.00
TCDL: 10.00
BCLL: 0.00
BCDL: 10.00
Des Ld: 40.00
NCBCLL: 10.00
Soffit: 2.00
Load Duration: 1.25
Spacing: 24.0 "

Wind Criteria

Wind Std: ASCE 7-10
Speed: 130 mph
Enclosure: Closed
Risk Category: II
EXP: C
Mean Height: 17.59 ft
TCDL: 5.0 psf
BCDL: 5.0 psf
MWFRS Parallel Dist: h to 2h
C&C Dist a: 5.00 ft
Loc. from endwall: not in 13.00 ft
GCpi: 0.18
Wind Duration: 1.60

Snow Criteria (Pg,Pf in PSF)

Pg: NA Ct: NA CAT: NA
Pf: NA Ce: NA
Lu: NA Cs: NA
Snow Duration: NA

Code / Misc Criteria

Bldg Code: FBC 2017 RES
TPI Std: 2014
Rep Factors Used: Yes
FT/RT:20(0)/10(0)
Plate Type(s):
WAVE, HS

Defl/CSI Criteria

PP Deflection in	loc	L/defl	L/#
VERT(LL): 0.234	G	999	240
VERT(TL): 0.674	G	999	180
HORZ(LL): 0.106	L	-	-
HORZ(TL): 0.206	L	-	-

Creep Factor: 2.0
Max TC CSI: 0.219
Max BC CSI: 0.488
Max Web CSI: 0.620

VIEW Ver: 17.02.00.1013.16

▲ Maximum Reactions (lbs)

Loc	R	/ U	/ Rw	/ Rh	/ RL	/ W
AC	2230	/ 63	/ 1178	/ -	/ 222	/ 5.5
L	2145	/ 81	/ 1147	/ -	/ -	/ 5.5

Wind reactions based on MWFRS
AC Min Brg Width Req = 1.5
L Min Brg Width Req = 1.5
Bearings AC & L are a rigid surface.

Members not listed have forces less than 375#

Maximum Top Chord Forces Per Ply (lbs)

Chords	Tens.	Comp.	Chords	Tens.	Comp.
A - B	247	-922	F - G	686	-2278
B - C	372	-1340	G - H	647	-2290
C - D	407	-1294	H - I	802	-2887
D - E	418	-1254	I - J	670	-2329
E - F	468	-1463	J - K	651	-2263

Maximum Bot Chord Forces Per Ply (lbs)

Chords	Tens.	Comp.	Chords	Tens.	Comp.
AB-AA	833	-217	X - W	1126	-249
AA- Z	833	-217	Q - P	2538	-683
Z - Y	1152	-274	P - O	4268	-1215
Y - X	1126	-249	O - M	4244	-1206

Maximum Web Forces Per Ply (lbs)

Webs	Tens.	Comp.	Webs	Tens.	Comp.
A -AC	293	-1105	F - Q	977	-295
A -AB	1048	-258	Q - H	224	-640
AB- B	175	-599	H - P	471	-123
B - Z	383	-76	P - I	543	-1761
W - E	169	-509	I - M	562	-2008
W - U	1314	-299	M - K	2472	-711
U - Q	1407	-322	K - L	305	-1033

Lumber

Top chord 2x6 SP #2 :T4 2x4 SP #2:
:T5, T6 2x4 SP M-31:
Bot chord 2x4 SP #2 :B5 2x4 SP M-31:
Webs 2x4 SP #3 :W11, W15 2x4 SP #2:
:W24 2x4 SP M-31:

Nailnote

Nail Schedule:0.131"x3", min. nails
Top Chord: 1 Row @12.00" o.c.
Bot Chord: 1 Row @12.00" o.c.
Webs : 1 Row @ 4" o.c.
Use equal spacing between rows and stagger nails in each row to avoid splitting.

Plating Notes

All plates are 2X4 except as noted.

Loading

Truss passed check for 20 psf additional bottom chord live load in areas with 42"-high x 24"-wide clearance.

Purlins

In lieu of structural panels use purlins to brace all flat TC @ 24" oc.

Wind

Wind loads based on MWFRS with additional C&C member design.

End verticals not exposed to wind pressure.

Additional Notes

WARNING: Furnish a copy of this DWG to the installation contractor. Special care must be taken during handling, shipping and installation of trusses. See "WARNING" note below.

The overall height of this truss excluding overhang is 11-7-10.

Laterally brace BC above filler @ 24" O.C. (or as designed) Including a brace on BC directly above both ends of filler (if no rigid diaphragm exists at that point)

WILLIAM H. KRICK
LICENSE
No. 70861
STATE OF FLORIDA
PROFESSIONAL ENGINEER

COA #0 278

05/24/2018

****WARNING**** READ AND FOLLOW ALL NOTES ON THIS DRAWING!
****IMPORTANT**** FURNISH THIS DRAWING TO ALL CONTRACTORS INCLUDING THE INSTALLERS

Trusses require extreme care in fabricating, handling, shipping, installing and bracing. Refer to and follow the latest edition of BCSI (Building Component Safety Information, by TPI and SBCA) for safety practices prior to performing these functions. Installers shall provide temporary bracing per BCSI. Unless noted otherwise,top chord shall have properly attached structural sheathing and bottom chord shall have a properly attached rigid ceiling. Locations shown for permanent lateral restraint of webs shall have bracing installed per BCSI sections B3, B7, or B10, as applicable. Apply plates to each face of truss and position as shown above and on the Joint Details, unless noted otherwise. Refer to drawings 160A-Z for standard plate positions.

Alpine, a division of ITW Building Components Group Inc. shall not be responsible for any deviation from this drawing,any failure to build the truss in conformance with ANSI/TPI 1, or for handling, shipping, installation and bracing of trusses**A seal on this drawing or cover page listing this drawing, indicates acceptance of professional engineering responsibility solely for the design shown. The suitability and use of this drawing for any structure is the responsibility of the Building Designer per ANSI/TPI 1 Sec.2.**

For more information see this job's general notes page and these web sites: ALPINE: www.alpineitw.com; TPI: www.tpinst.org; SBCA: www.sbcindustry.com; ICC: www.iccsafe.org

ALPINE
AN ITW COMPANY
6750 Forum Drive
Suite 305
Orlando FL, 32821

Job Number: 18-2262 FREEMAN **Truss Label:** A08	Ply: 1 Qty: 1	SEQN: 556363 / T25 COMN FROM: CDM	Cust: R215 JRef: 1Wb72150004 DrwNo: 144.18.0742.43283 KM / BAF 05/24/2018

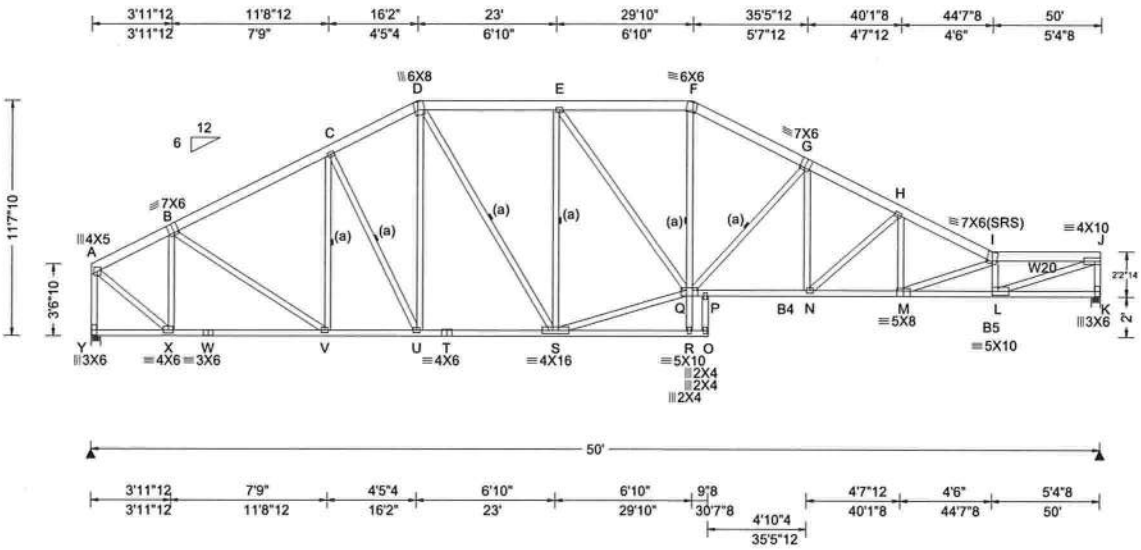

Loading Criteria (psf)
TCLL: 20.00
TCDL: 10.00
BCLL: 0.00
BCDL: 10.00
Des Ld: 40.00
NCBCLL: 10.00
Soffit: 2.00
Load Duration: 1.25
Spacing: 24.0 "

Wind Criteria
Wind Std: ASCE 7-10
Speed: 130 mph
Enclosure: Closed
Risk Category: II
EXP: C
Mean Height: 17.59 ft
TCDL: 5.0 psf
BCDL: 5.0 psf
MWFRS Parallel Dist: h/2 to h
C&C Dist a: 5.00 ft
Loc. from endwall: not in 13.00 ft
GCpi: 0.18
Wind Duration: 1.60

Snow Criteria (Pg,Pf in PSF)
Pg: NA Ct: NA CAT: NA
Pf: NA Ce: NA
Lu: NA Cs: NA
Snow Duration: NA

Code / Misc Criteria
Bldg Code: FBC 2017 RES
TPI Std: 2014
Rep Factors Used: Yes
FT/RT:20(0)/10(0)
Plate Type(s):
WAVE

Defl/CSI Criteria

PP Deflection in	loc	L/defl	L/#
VERT(LL): 0.263	N	999	240
VERT(TL): 0.820	N	999	180
HORZ(LL): 0.097	K	-	-
HORZ(TL): 0.200	K	-	-

Creep Factor: 2.0
Max TC CSI: 0.554
Max BC CSI: 0.815
Max Web CSI: 0.910

VIEW Ver: 17.02.00.1013.16

▲ Maximum Reactions (lbs)

Loc	R	/ U	/ Rw	/ Rh	/ RL	/ W
Y	2059	/ 390	/ 1178	/ -	/ 221	/ 5.5
K	2059	/ 398	/ 1148	/ -	/ -	/ 5.5

Wind reactions based on MWFRS
Y Min Brg Width Req = 2.4
K Min Brg Width Req = 1.7
Bearings Y & K are a rigid surface.

Members not listed have forces less than 375#

Maximum Top Chord Forces Per Ply (lbs)

Chords	Tens.	Comp.	Chords	Tens.	Comp.
A - B	493	-1700	F - G	1002	-3117
B - C	745	-2432	G - H	1152	-3786
C - D	813	-2330	H - I	1346	-4563
D - E	837	-2300	I - J	1477	-4972
E - F	934	-2733			

Maximum Bot Chord Forces Per Ply (lbs)

Chords	Tens.	Comp.	Chords	Tens.	Comp.
X - W	1533	-435	Q - P	3259	-858
W - V	1533	-435	P - N	3308	-869
V - U	2083	-549	N - M	4017	-1141
U - T	2021	-498	M - L	5248	-1567
T - S	2021	-498			

Maximum Web Forces Per Ply (lbs)

Webs	Tens.	Comp.	Webs	Tens.	Comp.
A - Y	586	-2040	Q - G	304	-870
A - X	1930	-517	G - N	641	-201
X - B	351	-1090	N - H	361	-938
B - V	659	-152	H - M	651	-181
D - S	537	-164	M - I	454	-1306
S - E	332	-1017	I - L	579	-1778
S - Q	2388	-594	L - J	5273	-1567
E - Q	718	-181	J - K	623	-1993
Q - F	969	-274			

Lumber
Top chord 2x6 SP #2
Bot chord 2x4 SP #2 :B4, B5 2x4 SP M-31:
Webs 2x4 SP #3 :W20 2x4 SP M-31:

Bracing
(a) Continuous lateral restraint equally spaced on member.

Plating Notes
All plates are 3X4 except as noted.

Purlins
In lieu of structural panels use purlins to brace all flat TC @ 24" oc.

Wind
Wind loads based on MWFRS with additional C&C member design.
End verticals not exposed to wind pressure.

Additional Notes
WARNING: Furnish a copy of this DWG to the installation contractor. Special care must be taken during handling, shipping and installation of trusses. See "WARNING" note below.
The overall height of this truss excluding overhang is 11-7-10.
Laterally brace BC above filler @ 24" O.C. (or as designed) Including a brace on BC directly above both ends of filler (if no rigid diaphragm exists at that point)

WILLIAM H. KRICK
LICENSE
No. 70861
STATE OF FLORIDA
PROFESSIONAL ENGINEER

COA #0278

05/24/2018

****WARNING**** READ AND FOLLOW ALL NOTES ON THIS DRAWING!
****IMPORTANT**** FURNISH THIS DRAWING TO ALL CONTRACTORS INCLUDING THE INSTALLERS

Trusses require extreme care in fabricating, handling, shipping, installing and bracing. Refer to and follow the latest edition of BCSI (Building Component Safety Information, by TPI and SBCA) for safety practices prior to performing these functions. Installers shall provide temporary bracing per BCSI. Unless noted otherwise,top chord shall have properly attached structural sheathing and bottom chord shall have a properly attached rigid ceiling. Locations shown for permanent lateral restraint of webs shall have bracing installed per BCSI sections B3, B7, or B10, as applicable. Apply plates to each face of truss and position as shown above and on the Joint Details, unless noted otherwise. Refer to drawings 160A-Z for standard plate positions.

Alpine, a division of ITW Building Components Group Inc. shall not be responsible for any deviation from this drawing,any failure to build the truss in conformance with ANSI/TPI 1, or for handling, shipping, installation and bracing of trusses**A seal on this drawing or cover page listing this drawing, indicates acceptance of professional engineering responsibility solely for the design shown. The suitability and use of this drawing for any structure is the responsibility of the Building Designer per ANSI/TPI 1 Sec.2.**

For more information see this job's general notes page and these web sites: ALPINE: www.alpineitw.com; TPI: www.tpinst.org; SBCA: www.sbcindustry.com; ICC: www.iccsafe.org

ALPINE AN ITW COMPANY
6750 Forum Drive
Suite 305
Orlando FL, 32821

Job Number: 18-2262 FREEMAN **Truss Label:** A09	Ply: 1 Qty: 1	SEQN: 556369 / T24 HIPS FROM: CDM	Cust: R215 JRef: 1Wb72150004 DrwNo: 144.18.0742.47840 KM / BAF 05/24/2018

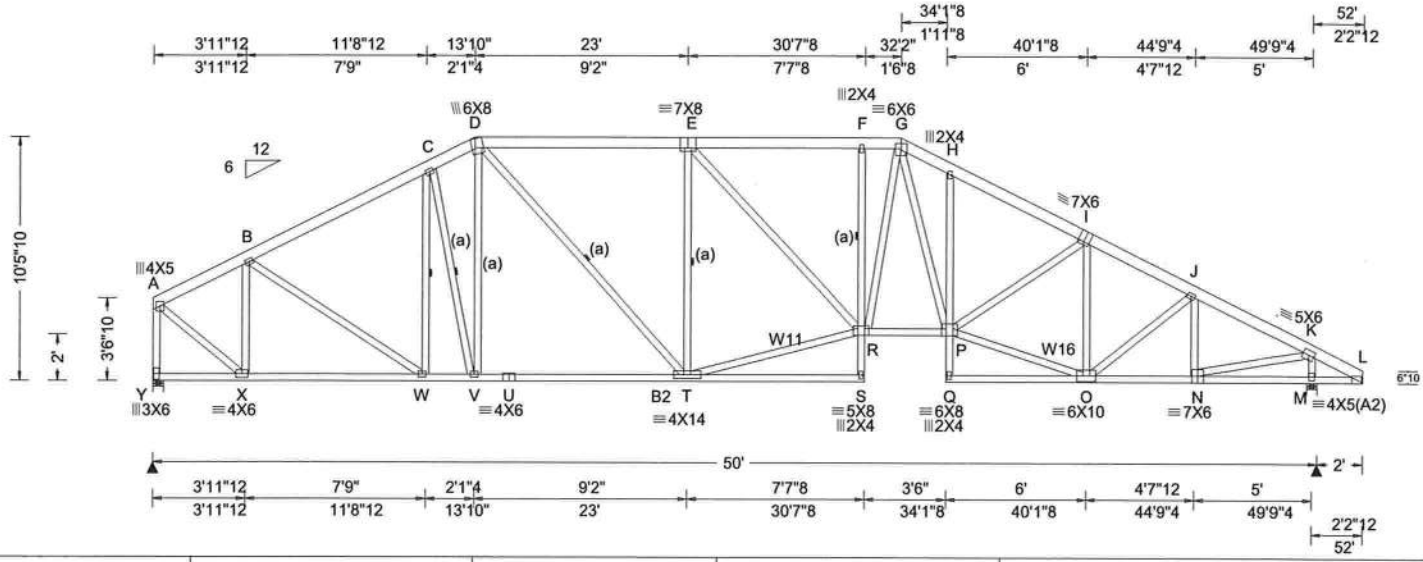

Loading Criteria (psf)	Wind Criteria	Snow Criteria (Pg,Pf in PSF)	Defl/CSI Criteria
TCLL: 20.00 TCDL: 10.00 BCLL: 0.00 BCDL: 10.00 Des Ld: 40.00 NCBCLL: 10.00 Soffit: 2.00 Load Duration: 1.25 Spacing: 24.0 "	Wind Std: ASCE 7-10 Speed: 130 mph Enclosure: Closed Risk Category: II EXP: C Mean Height: 15.51 ft TCDL: 5.0 psf BCDL: 5.0 psf MWFRS Parallel Dist: h/2 to h C&C Dist a: 5.20 ft Loc. from endwall: not in 13.00 ft GCpi: 0.18 Wind Duration: 1.60	Pg: NA Ct: NA CAT: NA Pf: NA Ce: NA Lu: NA Cs: NA Snow Duration: NA **Code / Misc Criteria** Bldg Code: FBC 2017 RES TPI Std: 2014 Rep Factors Used: Yes FT/RT:20(0)/10(0) Plate Type(s): WAVE	PP Deflection in loc L/defl L/# VERT(LL): 0.183 F 999 240 VERT(TL): 0.574 F 999 180 HORZ(LL): 0.097 M - - HORZ(TL): 0.200 M - - Creep Factor: 2.0 Max TC CSI: 0.457 Max BC CSI: 0.790 Max Web CSI: 0.892 VIEW Ver: 17.02.00.1013.16

▲ Maximum Reactions (lbs)

Loc	R	/ U	/ Rw	/ Rh	/ RL	/ W
Y	2047	/ 371	/ 1160	/ -	/ 252	/ 5.5
M	2237	/ 382	/ 1390	/ -	/ -	/ 5.5

Wind reactions based on MWFRS
Y Min Brg Width Req = 2.4
M Min Brg Width Req = 2.3
Bearings Y & M are a rigid surface.

Members not listed have forces less than 375#

Maximum Top Chord Forces Per Ply (lbs)

Chords	Tens.	Comp.	Chords	Tens.	Comp.
A - B	481	-1691	F - G	948	-3053
B - C	728	-2415	G - H	1112	-3588
C - D	783	-2327	H - I	1024	-3648
D - E	851	-2559	I - J	831	-3003
E - F	947	-3049	J - K	718	-2782

Maximum Bot Chord Forces Per Ply (lbs)

Chords	Tens.	Comp.	Chords	Tens.	Comp.
X - W	1525	-313	U - T	2068	-379
W - V	2069	-403	R - P	2941	-587
V - U	2068	-379	O - N	2440	-565

Maximum Web Forces Per Ply (lbs)

Webs	Tens.	Comp.	Webs	Tens.	Comp.
A - Y	570	-2028	R - G	539	-184
A - X	1920	-504	G - P	943	-335
X - B	344	-1084	P - I	657	-96
B - W	651	-130	P - O	2796	-630
D - T	728	-202	I - O	261	-1011
T - E	329	-1083	J - N	158	-534
T - R	2654	-537	N - K	2343	-530
E - R	700	-135	K - M	617	-2121

Lumber

Top chord 2x6 SP #2
Bot chord 2x4 SP #2 :B2 2x4 SP M-31:
Webs 2x4 SP #3 :W11, W16 2x4 SP #2:

Bracing

(a) Continuous lateral restraint equally spaced on member.

Plating Notes

All plates are 3X4 except as noted.

Purlins

In lieu of structural panels use purlins to brace all flat TC @ 24" oc.

Wind

Wind loads based on MWFRS with additional C&C member design.

Left end vertical not exposed to wind pressure.

Right cantilever is exposed to wind

Additional Notes

WARNING: Furnish a copy of this DWG to the installation contractor. Special care must be taken during handling, shipping and installation of trusses. See "WARNING" note below.

The overall height of this truss excluding overhang is 10-5-10.

WILLIAM H. KRICK
LICENSE
No. 70861
STATE OF
FLORIDA
PROFESSIONAL ENGINEER

COA #0278

05/24/2018

****WARNING**** READ AND FOLLOW ALL NOTES ON THIS DRAWING!
****IMPORTANT**** FURNISH THIS DRAWING TO ALL CONTRACTORS INCLUDING THE INSTALLERS

Trusses require extreme care in fabricating, handling, shipping, installing and bracing. Refer to and follow the latest edition of BCSI (Building Component Safety Information, by TPI and SBCA) for safety practices prior to performing these functions. Installers shall provide temporary bracing per BCSI. Unless noted otherwise,top chord shall have properly attached structural sheathing and bottom chord shall have a properly attached rigid ceiling. Locations shown for permanent lateral restraint of webs shall have bracing installed per BCSI sections B3, B7, or B10, as applicable. Apply plates to each face of truss and position as shown above and on the Joint Details, unless noted otherwise. Refer to drawings 160A-Z for standard plate positions.

Alpine, a division of ITW Building Components Group Inc. shall not be responsible for any deviation from this drawing,any failure to build the truss in conformance with ANSI/TPI 1, or for handling, shipping, installation and bracing of trusses**A seal on this drawing or cover page listing this drawing, indicates acceptance of professional engineering responsibility solely for the design shown. The suitability and use of this drawing for any structure is the responsibility of the Building Designer per ANSI/TPI 1 Sec.2.**

For more information see this job's general notes page and these web sites: ALPINE: www.alpineitw.com; TPI: www.tpinst.org; SBCA: www.sbcindustry.com; ICC: www.iccsafe.org

ALPINE™ AN ITW COMPANY
6750 Forum Drive
Suite 305
Orlando FL, 32821

Job Number: 18-2262 FREEMAN **Truss Label:** A10	Ply: 1 Qty: 1	SEQN: 556376 / T48 COMN FROM: CDM	Cust: R215 JRef: 1Wb72150004 DrwNo: 144.18.0742.50247 KM / BAF 05/24/2018

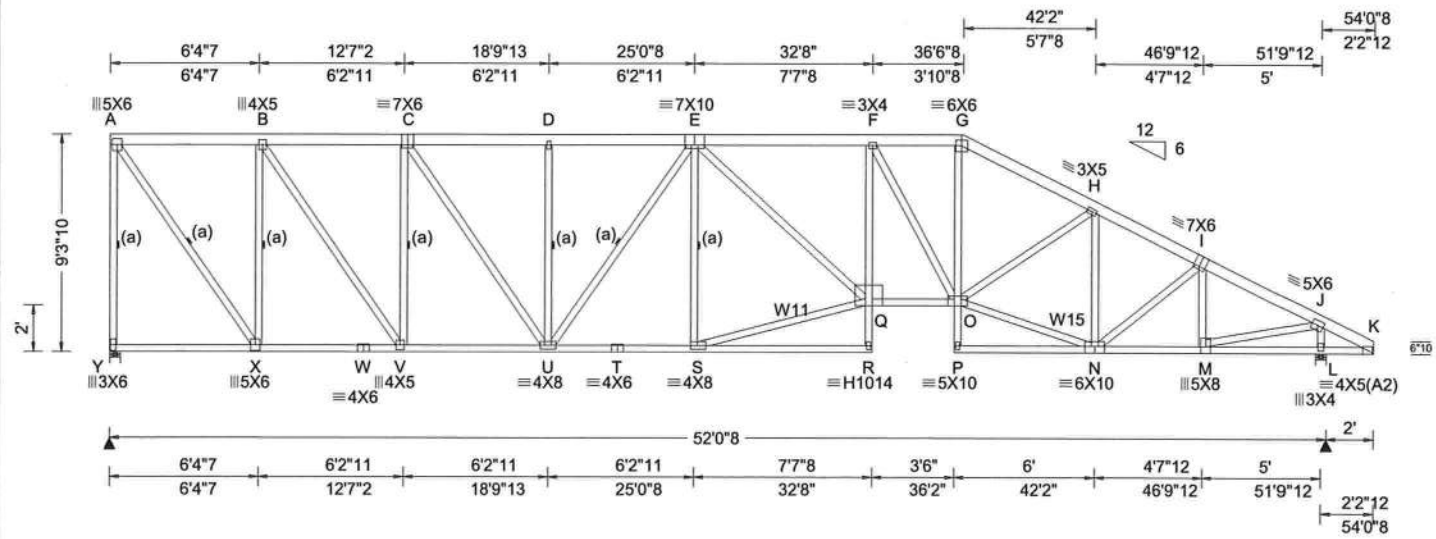

Loading Criteria (psf)

TCLL:	20.00
TCDL:	10.00
BCLL:	0.00
BCDL:	10.00
Des Ld:	40.00
NCBCLL:	10.00
Soffit:	2.00

Load Duration: 1.25
Spacing: 24.0 "

Wind Criteria
Wind Std: ASCE 7-10
Speed: 130 mph
Enclosure: Closed
Risk Category: II
EXP: C
Mean Height: 15.00 ft
TCDL: 5.0 psf
BCDL: 5.0 psf
MWFRS Parallel Dist: h/2 to h
C&C Dist a: 5.40 ft
Loc. from endwall: not in 6.50 ft
GCpi: 0.18
Wind Duration: 1.60

Snow Criteria (Pg,Pf in PSF)
Pg: NA Ct: NA CAT: NA
Pf: NA Ce: NA
Lu: NA Cs: NA
Snow Duration: NA

Code / Misc Criteria
Bldg Code: FBC 2017 RES
TPI Std: 2014
Rep Factors Used: Yes
FT/RT:20(0)/10(0)
Plate Type(s):
WAVE, HS

Defl/CSI Criteria

PP Deflection in	loc	L/defl	L/#
VERT(LL): 0.253	Q	999	240
VERT(TL): 0.797	Q	999	180
HORZ(LL): 0.117	L	-	-
HORZ(TL): 0.241	L	-	-

Creep Factor: 2.0
Max TC CSI: 0.412
Max BC CSI: 0.993
Max Web CSI: 0.955

VIEW Ver: 17.02.00.1013.16

▲ Maximum Reactions (lbs)

Loc	R	/ U	/ Rw	/ Rh	/ RL	/ W
Y	2132	/ 417	/ 1105	/ -	/ 250	/ 5.5
L	2321	/ 376	/ 1450	/ -	/ -	/ 5.5

Wind reactions based on MWFRS
Y Min Brg Width Req = 2.5
L Min Brg Width Req = 2.4
Bearings Y & L are a rigid surface.

Members not listed have forces less than 375#

Maximum Top Chord Forces Per Ply (lbs)

Chords	Tens.	Comp.	Chords	Tens.	Comp.
A - B	369	-1336	F - G	965	-3420
B - C	626	-2276	G - H	1016	-3868
C - D	802	-2883	H - I	833	-3149
D - E	802	-2883	I - J	718	-2906
E - F	1041	-3814			

Maximum Bot Chord Forces Per Ply (lbs)

Chords	Tens.	Comp.	Chords	Tens.	Comp.
X - W	1394	-85	T - S	3127	-586
W - V	1394	-85	Q - O	3814	-739
V - U	2315	-336	N - M	2553	-565
U - T	3127	-586			

Maximum Web Forces Per Ply (lbs)

Webs	Tens.	Comp.	Webs	Tens.	Comp.
A - Y	613	-2081	Q - F	420	-62
A - X	2336	-646	F - O	210	-827
X - B	553	-1778	O - G	1406	-311
B - V	1593	-430	O - H	756	-80
V - C	378	-1203	O - N	2932	-635
C - U	1009	-292	H - N	267	-1072
U - E	150	-426	I - M	155	-562
E - S	194	-748	M - J	2451	-519
E - Q	942	-210	J - L	607	-2204
S - Q	3209	-603			

Lumber

Top chord 2x6 SP #2
Bot chord 2x4 SP #2
Webs 2x4 SP #3 :W11, W15 2x4 SP #2:

Bracing

(a) Continuous lateral restraint equally spaced on member.

Plating Notes

All plates are 2X4 except as noted.

Purlins

In lieu of structural panels use purlins to brace all flat TC @ 24" oc.

Wind

Wind loads based on MWFRS with additional C&C member design.

Left end vertical not exposed to wind pressure.

Right cantilever is exposed to wind

Additional Notes

WARNING: Furnish a copy of this DWG to the installation contractor. Special care must be taken during handling, shipping and installation of trusses. See "WARNING" note below.

The overall height of this truss excluding overhang is 9-3-10.

WILLIAM H. KRICK
LICENSE
No. 70861
STATE OF FLORIDA
PROFESSIONAL ENGINEER

COA #0 278

05/24/2018

****WARNING**** READ AND FOLLOW ALL NOTES ON THIS DRAWING!
****IMPORTANT**** FURNISH THIS DRAWING TO ALL CONTRACTORS INCLUDING THE INSTALLERS

Trusses require extreme care in fabricating, handling, shipping, installing and bracing. Refer to and follow the latest edition of BCSI (Building Component Safety Information, by TPI and SBCA) for safety practices prior to performing these functions. Installers shall provide temporary bracing per BCSI. Unless noted otherwise,top chord shall have properly attached structural sheathing and bottom chord shall have a properly attached rigid ceiling. Locations shown for permanent lateral restraint of webs shall have bracing installed per BCSI sections B3, B7, or B10, as applicable. Apply plates to each face of truss and position as shown above and on the Joint Details, unless noted otherwise. Refer to drawings 160A-Z for standard plate positions.

Alpine, a division of ITW Building Components Group Inc. shall not be responsible for any deviation from this drawing,any failure to build the truss in conformance with ANSI/TPI 1, or for handling, shipping, installation and bracing of trusses**A seal on this drawing or cover page listing this drawing, indicates acceptance of professional engineering responsibility solely for the design shown. The suitability and use of this drawing for any structure is the responsibility of the Building Designer per ANSI/TPI 1 Sec.2.**

For more information see this job's general notes page and these web sites: ALPINE: www.alpineitw.com; TPI: www.tpinst.org; SBCA: www.sbcindustry.com; ICC: www.iccsafe.org

ALPINE
AN ITW COMPANY
6750 Forum Drive
Suite 305
Orlando FL, 32821

Job Number: 18-2262 FREEMAN **Truss Label:** A11	Ply: 1 Qty: 1	SEQN: 556380 / T33 COMN FROM: CDM	Cust: R215 JRef: 1Wb72150004 DrwNo: 144.18.0742.52693 KM / BAF 05/24/2018

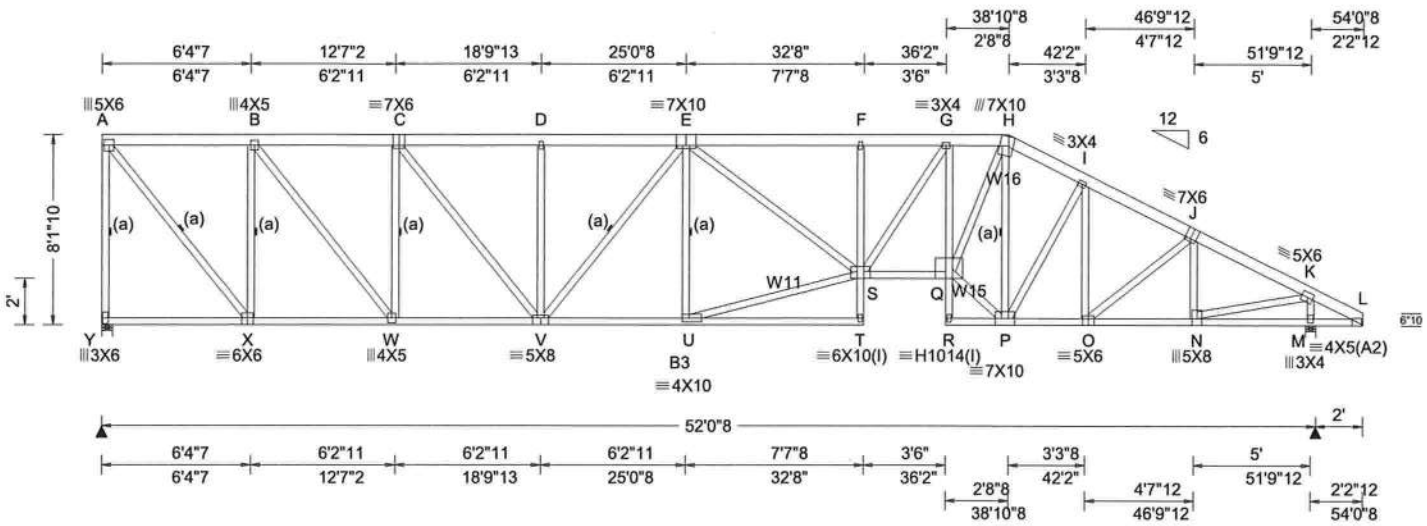

Loading Criteria (psf)

TCLL: 20.00
TCDL: 10.00
BCLL: 0.00
BCDL: 10.00
Des Ld: 40.00
NCBCLL: 10.00
Soffit: 2.00
Load Duration: 1.25
Spacing: 24.0 "

Wind Criteria

Wind Std: ASCE 7-10
Speed: 130 mph
Enclosure: Closed
Risk Category: II
EXP: C
Mean Height: 15.00 ft
TCDL: 5.0 psf
BCDL: 5.0 psf
MWFRS Parallel Dist: h/2 to h
C&C Dist a: 5.40 ft
Loc. from endwall: not in 6.50 ft
GCpi: 0.18
Wind Duration: 1.60

Snow Criteria (Pg,Pf in PSF)

Pg: NA Ct: NA CAT: NA
Pf: NA Ce: NA
Lu: NA Cs: NA
Snow Duration: NA

Code / Misc Criteria

Bldg Code: FBC 2017 RES
TPI Std: 2014
Rep Factors Used: Yes
FT/RT:20(0)/10(0)
Plate Type(s):
WAVE, HS

Defl/CSI Criteria

PP Deflection in	loc	L/defl	L/#
VERT(LL): 0.331	F	999	240
VERT(TL): 1.041	F	910	180
HORZ(LL): 0.154	M	-	-
HORZ(TL): 0.318	M	-	-

Creep Factor: 2.0
Max TC CSI: 0.446
Max BC CSI: 0.973
Max Web CSI: 0.935

VIEW Ver: 17.02.00.1013.16

▲ Maximum Reactions (lbs)

Loc	R	/ U	/ Rw	/ Rh	/ RL	/ W
Y	2132	/ 413	/ 1091	/ -	/ 216	/ 5.5
M	2321	/ 383	/ 1422	/ -	/ -	/ 5.5

Wind reactions based on MWFRS
Y Min Brg Width Req = 2.5
M Min Brg Width Req = 2.4
Bearings Y & M are a rigid surface.

Members not listed have forces less than 375#

Maximum Top Chord Forces Per Ply (lbs)

Chords	Tens.	Comp.	Chords	Tens.	Comp.
A - B	419	-1536	F - G	1232	-4622
B - C	707	-2618	G - H	1132	-4165
C - D	905	-3316	H - I	888	-3048
D - E	905	-3316	I - J	861	-3138
E - F	1230	-4612	J - K	746	-2907

Maximum Bot Chord Forces Per Ply (lbs)

Chords	Tens.	Comp.	Chords	Tens.	Comp.
X - W	1603	-174	S - Q	4191	-872
W - V	2663	-456	P - O	2759	-617
V - U	3595	-731	O - N	2551	-592

Maximum Web Forces Per Ply (lbs)

Webs	Tens.	Comp.	Webs	Tens.	Comp.
A - Y	606	-2081	F - S	158	-409
A - X	2456	-670	S - G	797	-190
X - B	546	-1779	G - Q	218	-718
B - W	1671	-441	Q - P	3519	-729
W - C	371	-1202	Q - H	3583	-749
C - V	1059	-298	P - H	381	-2127
V - E	147	-446	J - N	162	-551
E - U	237	-884	N - K	2449	-547
E - S	1292	-297	K - M	624	-2207
U - S	3688	-751			

Lumber

Top chord 2x6 SP #2
Bot chord 2x4 SP #2 :B3 2x4 SP M-31:
Webs 2x4 SP #3 :W11, W15, W16 2x4 SP #2:

Bracing

(a) Continuous lateral restraint equally spaced on member.

Plating Notes

All plates are 2X4 except as noted.

(I) - plates so marked were sized using 0% Fabrication Tolerance, 0 degrees Rotational Tolerance, and/or zero Positioning Tolerance.

Purlins

In lieu of structural panels use purlins to brace all flat TC @ 24" oc.

Wind

Wind loads based on MWFRS with additional C&C member design.

Left end vertical not exposed to wind pressure.

Right cantilever is exposed to wind

Additional Notes

WARNING: Furnish a copy of this DWG to the installation contractor. Special care must be taken during handling, shipping and installation of trusses. See "WARNING" note below.

The overall height of this truss excluding overhang is 8-1-10.

WILLIAM H. KRICK
LICENSE
No. 70861
STATE OF FLORIDA
PROFESSIONAL ENGINEER

COA #0 278
05/24/2018

****WARNING**** READ AND FOLLOW ALL NOTES ON THIS DRAWING!
****IMPORTANT**** FURNISH THIS DRAWING TO ALL CONTRACTORS INCLUDING THE INSTALLERS

Trusses require extreme care in fabricating, handling, shipping, installing and bracing. Refer to and follow the latest edition of BCSI (Building Component Safety Information, by TPI and SBCA) for safety practices prior to performing these functions. Installers shall provide temporary bracing per BCSI. Unless noted otherwise,top chord shall have properly attached structural sheathing and bottom chord shall have a properly attached rigid ceiling. Locations shown for permanent lateral restraint of webs shall have bracing installed per BCSI sections B3, B7, or B10, as applicable. Apply plates to each face of truss and position as shown above and on the Joint Details, unless noted otherwise. Refer to drawings 160A-Z for standard plate positions.

Alpine, a division of ITW Building Components Group Inc. shall not be responsible for any deviation from this drawing,any failure to build the truss in conformance with ANSI/TPI 1, or for handling, shipping, installation and bracing of trusses**A seal on this drawing or cover page listing this drawing, indicates acceptance of professional engineering responsibility solely for the design shown. The suitability and use of this drawing for any structure is the responsibility of the Building Designer per ANSI/TPI 1 Sec.2.**

For more information see this job's general notes page and these web sites: ALPINE: www.alpineitw.com; TPI: www.tpinst.org; SBCA: www.sbcindustry.com; ICC: www.iccsafe.org

ALPINE
AN ITW COMPANY
6750 Forum Drive
Suite 305
Orlando FL, 32821

Job Number: 18-2262 FREEMAN **Truss Label:** A12	Ply: 1 Qty: 1	SEQN: 556402 / T76 COMN FROM: CDM	Cust: R215 JRef: 1Wb72150004 DrwNo: 144.18.0742.55030 KM / BAF 05/24/2018

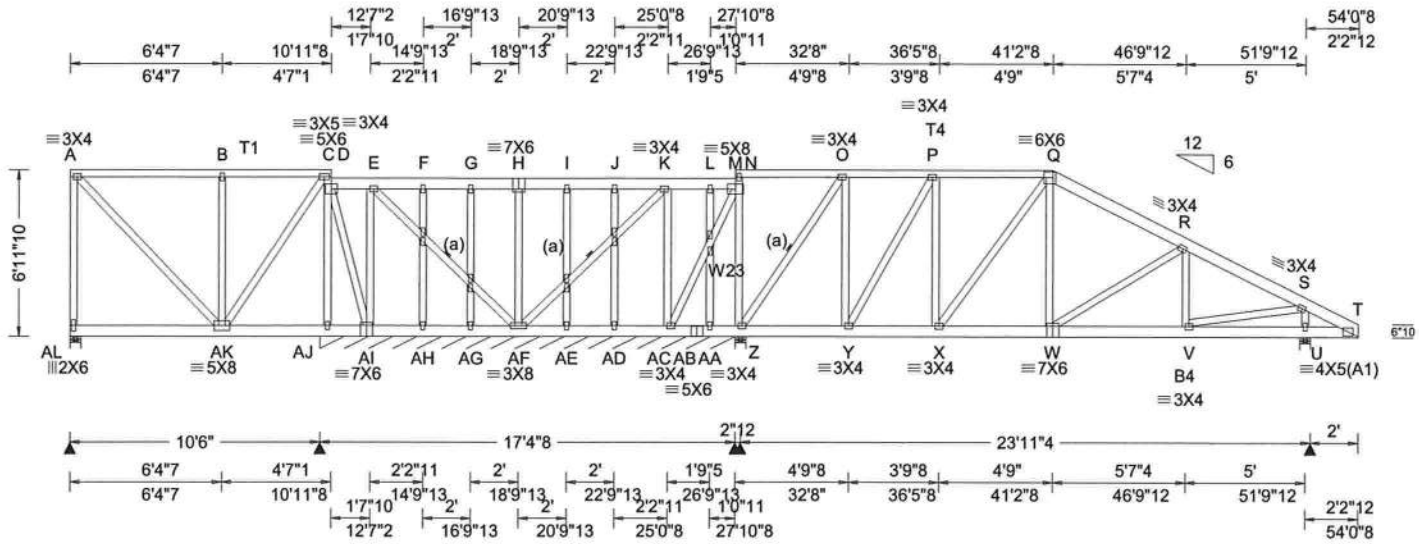

Loading Criteria (psf)
TCLL: 20.00
TCDL: 10.00
BCLL: 0.00
BCDL: 10.00
Des Ld: 40.00
NCBCLL: 10.00
Soffit: 2.00
Load Duration: 1.25
Spacing: 24.0 "

Wind Criteria
Wind Std: ASCE 7-10
Speed: 130 mph
Enclosure: Closed
Risk Category: II
EXP: C
Mean Height: 15.00 ft
TCDL: 5.0 psf
BCDL: 5.0 psf
MWFRS Parallel Dist: 0 to h/2
C&C Dist a: 5.40 ft
Loc. from endwall: Any
GCpi: 0.18
Wind Duration: 1.60

Snow Criteria (Pg,Pf in PSF)
Pg: NA Ct: NA CAT: NA
Pf: NA Ce: NA
Lu: NA Cs: NA
Snow Duration: NA

Code / Misc Criteria
Bldg Code: FBC 2017 RES
TPI Std: 2014
Rep Factors Used: Yes
FT/RT:20(0)/10(0)
Plate Type(s):
WAVE

Defl/CSI Criteria

PP Deflection in	loc	L/defl	L/#
VERT(LL): 0.025	W	999	240
VERT(TL): 0.081	W	999	180
HORZ(LL): 0.006	U	-	-
HORZ(TL): 0.012	U	-	-

Creep Factor: 2.0
Max TC CSI: 0.343
Max BC CSI: 0.920
Max Web CSI: 0.584

VIEW Ver: 17.02.00.1013.16

▲ Maximum Reactions (lbs), or *=PLF

Loc	R	/ U	/ Rw	/ Rh	/ RL	/ W
AL	1188	/ 223	/ -	/ -	/ -	/ 5.5
AJ*	139	/ 28	/ -	/ -	/ -	/ 208
Z	1065	/ 174	/ -	/ -	/ -	/ 5.5
U	1145	/ 215	/ -	/ -	/ -	/ 5.5

Wind reactions based on MWFRS
AL Min Brg Width Req = 1.5
AJ Min Brg Width Req = -
Z Min Brg Width Req = 1.5
U Min Brg Width Req = 1.5
Bearings AL, AJ, Z, & U are a rigid surface.

Members not listed have forces less than 375#

Maximum Top Chord Forces Per Ply (lbs)

Chords	Tens.	Comp.	Chords	Tens.	Comp.
A - B	110	-563	P - Q	142	-752
B - D	110	-563	Q - R	211	-1037
O - P	92	-484	R - S	234	-1204

Maximum Bot Chord Forces Per Ply (lbs)

Chords	Tens.	Comp.	Chords	Tens.	Comp.
Z - Y	460	-90	X - W	853	-159
Y - X	740	-141	W - V	1022	-191

Maximum Web Forces Per Ply (lbs)

Webs	Tens.	Comp.	Webs	Tens.	Comp.
A -AL	147	-664	Z - O	191	-982
A -AK	810	-159	O - Y	544	-46
AK- D	1048	-202	Y - P	105	-546
C -AJ	120	-522	V - S	949	-174
C - D	204	-908	S - U	240	-996
C -AI	101	-426			

Lumber

Top chord 2x6 SP #2 :T1, T4 2x4 SP #2:
Bot chord 2x6 SP #2 :B4 2x6 SP 2400f-2.0E:
Webs 2x4 SP #3 :W23 2x4 SP #2:

Bracing

(a) Continuous lateral restraint equally spaced on member.

Special Loads

------(Lumber Dur.Fac.=1.25 / Plate Dur.Fac.=1.25)
TC: From 31 plf at 0.00 to 31 plf at 10.96
TC: From 62 plf at 10.96 to 62 plf at 54.04
BC: From 10 plf at 0.00 to 10 plf at 8.90
BC: From 20 plf at 8.90 to 20 plf at 54.04
BC: 374 lb Conc. Load at 0.90
BC: 352 lb Conc. Load at 2.90, 4.90, 6.90, 8.90

Plating Notes

All plates are 2X4 except as noted.

Purlins

In lieu of structural panels use purlins to brace all flat TC @ 24" oc.

Wind

Wind loads and reactions based on MWFRS.

Left end vertical not exposed to wind pressure.

Right cantilever is exposed to wind

Additional Notes

WARNING: Furnish a copy of this DWG to the installation contractor. Special care must be taken during handling, shipping and installation of trusses. See "WARNING" note below.

The overall height of this truss excluding overhang is 6-11-10.

WILLIAM H. KRICK
LICENSE
No. 70861
STATE OF FLORIDA
PROFESSIONAL ENGINEER

COA #0 278
05/24/2018

****WARNING**** READ AND FOLLOW ALL NOTES ON THIS DRAWING!
****IMPORTANT**** FURNISH THIS DRAWING TO ALL CONTRACTORS INCLUDING THE INSTALLERS

Trusses require extreme care in fabricating, handling, shipping, installing and bracing. Refer to and follow the latest edition of BCSI (Building Component Safety Information, by TPI and SBCA) for safety practices prior to performing these functions. Installers shall provide temporary bracing per BCSI. Unless noted otherwise,top chord shall have properly attached structural sheathing and bottom chord shall have a properly attached rigid ceiling. Locations shown for permanent lateral restraint of webs shall have bracing installed per BCSI sections B3, B7, or B10, as applicable. Apply plates to each face of truss and position as shown above and on the Joint Details, unless noted otherwise. Refer to drawings 160A-Z for standard plate positions.

Alpine, a division of ITW Building Components Group Inc. shall not be responsible for any deviation from this drawing,any failure to build the truss in conformance with ANSI/TPI 1, or for handling, shipping, installation and bracing of trusses**A seal on this drawing or cover page listing this drawing, indicates acceptance of professional engineering responsibility solely for the design shown. The suitability and use of this drawing for any structure is the responsibility of the Building Designer per ANSI/TPI 1 Sec.2.**

For more information see this job's general notes page and these web sites: ALPINE: www.alpineitw.com; TPI: www.tpinst.org; SBCA: www.sbcindustry.com; ICC: www.iccsafe.org

ALPINE
AN ITW COMPANY
6750 Forum Drive
Suite 305
Orlando FL, 32821

Job Number: 18-2262 FREEMAN **Truss Label:** B01	Ply: 1 Qty: 1	SEQN: 556434 / T19 HIPS FROM: CDM	Cust: R215 JRef: 1Wb72150004 DrwNo: 144.18.0742.57563 KM / BAF 05/24/2018

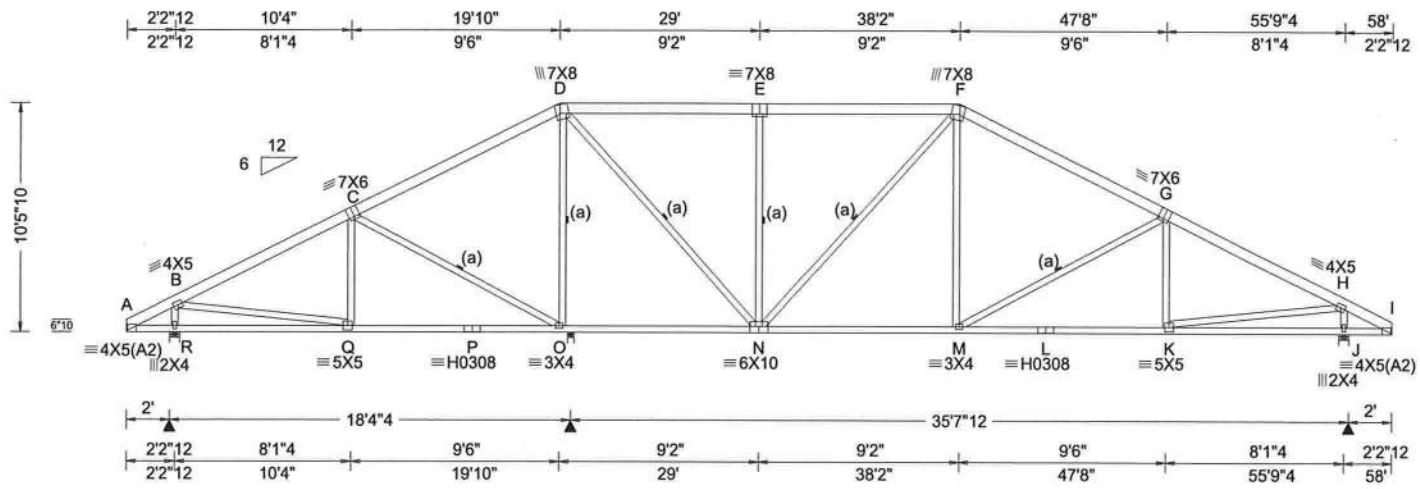

Loading Criteria (psf)	Wind Criteria	Snow Criteria (Pg,Pf in PSF)	Defl/CSI Criteria
TCLL: 20.00 TCDL: 10.00 BCLL: 0.00 BCDL: 10.00 Des Ld: 40.00 NCBCLL: 10.00 Soffit: 2.00 Load Duration: 1.25 Spacing: 24.0 "	Wind Std: ASCE 7-10 Speed: 130 mph Enclosure: Closed Risk Category: II EXP: C Mean Height: 15.51 ft TCDL: 5.0 psf BCDL: 5.0 psf MWFRS Parallel Dist: h to 2h C&C Dist a: 5.80 ft Loc. from endwall: not in 13.00 ft GCpi: 0.18 Wind Duration: 1.60	Pg: NA Ct: NA CAT: NA Pf: NA Ce: NA Lu: NA Cs: NA Snow Duration: NA **Code / Misc Criteria** Bldg Code: FBC 2017 RES TPI Std: 2014 Rep Factors Used: Yes FT/RT:20(0)/10(0) Plate Type(s): WAVE, HS	PP Deflection in loc L/defl L/# VERT(LL): 0.096 M 999 240 VERT(TL): 0.302 M 999 180 HORZ(LL): 0.031 J - - HORZ(TL): 0.064 J - - Creep Factor: 2.0 Max TC CSI: 0.407 Max BC CSI: 0.711 Max Web CSI: 0.688 VIEW Ver: 17.02.00.1013.16

▲ Maximum Reactions (lbs)

Loc	R	/ U	/ Rw	/ Rh	/ RL	/ W
R	1265	/ 32	/ 825	/ -	/ 283	/ 5.5
O	1701	/ 42	/ 969	/ 0	/ 0	/ 3.5
J	1815	/ 65	/ 1186	/ -	/ -	/ 5.5

Wind reactions based on MWFRS
R Min Brg Width Req = 1.5
O Min Brg Width Req = 1.5
J Min Brg Width Req = 1.5
Bearings R, O, & J are a rigid surface.

Members not listed have forces less than 375#

Maximum Top Chord Forces Per Ply (lbs)

Chords	Tens.	Comp.	Chords	Tens.	Comp.
B - C	402	-1482	E - F	569	-1421
C - D	333	-833	F - G	623	-1950
D - E	569	-1421	G - H	641	-2384

Maximum Bot Chord Forces Per Ply (lbs)

Chords	Tens.	Comp.	Chords	Tens.	Comp.
Q - P	1228	-256	N - M	1627	-297
P - O	1228	-256	M - L	2038	-471
O - N	1256	-166	L - K	2038	-471

Maximum Web Forces Per Ply (lbs)

Webs	Tens.	Comp.	Webs	Tens.	Comp.
R - B	416	-1165	E - N	221	-586
B - Q	1088	-207	F - M	574	-75
C - O	257	-709	M - G	200	-472
D - O	341	-1153	K - H	1807	-398
D - N	1256	-328	H - J	536	-1663

Lumber

Top chord 2x6 SP #2
Bot chord 2x4 SP 2400f-2.0E
Webs 2x4 SP #3

Bracing

(a) Continuous lateral restraint equally spaced on member.

Purlins

In lieu of structural panels use purlins to brace all flat TC @ 24" oc.

Wind

Wind loads based on MWFRS with additional C&C member design.

Left and right cantilevers are exposed to wind

Additional Notes

WARNING: Furnish a copy of this DWG to the installation contractor. Special care must be taken during handling, shipping and installation of trusses. See "WARNING" note below.

The overall height of this truss excluding overhang is 10-5-10.

WILLIAM H. KRICK
LICENSE
No. 70861
STATE OF FLORIDA
PROFESSIONAL ENGINEER

COA #0 278
05/24/2018

****WARNING**** READ AND FOLLOW ALL NOTES ON THIS DRAWING!
****IMPORTANT**** FURNISH THIS DRAWING TO ALL CONTRACTORS INCLUDING THE INSTALLERS

Trusses require extreme care in fabricating, handling, shipping, installing and bracing. Refer to and follow the latest edition of BCSI (Building Component Safety Information, by TPI and SBCA) for safety practices prior to performing these functions. Installers shall provide temporary bracing per BCSI. Unless noted otherwise,top chord shall have properly attached structural sheathing and bottom chord shall have a properly attached rigid ceiling. Locations shown for permanent lateral restraint of webs shall have bracing installed per BCSI sections B3, B7, or B10, as applicable. Apply plates to each face of truss and position as shown above and on the Joint Details, unless noted otherwise. Refer to drawings 160A-Z for standard plate positions.

Alpine, a division of ITW Building Components Group Inc. shall not be responsible for any deviation from this drawing,any failure to build the truss in conformance with ANSI/TPI 1, or for handling, shipping, installation and bracing of trusses**A seal on this drawing or cover page listing this drawing, indicates acceptance of professional engineering responsibility solely for the design shown. The suitability and use of this drawing for any structure is the responsibility of the Building Designer per ANSI/TPI 1 Sec.2.**

For more information see this job's general notes page and these web sites: ALPINE: www.alpineitw.com; TPI: www.tpinst.org; SBCA: www.sbcindustry.com; ICC: www.iccsafe.org

ALPINE
AN ITW COMPANY
6750 Forum Drive
Suite 305
Orlando FL, 32821

Job Number: 18-2262 FREEMAN **Truss Label:** B02	Ply: 1 Qty: 1	SEQN: 556428 / T5 HIPS FROM: CDM	Cust: R215 JRef: 1Wb72150004 DrwNo: 144.18.0743.01997 KM / BAF 05/24/2018

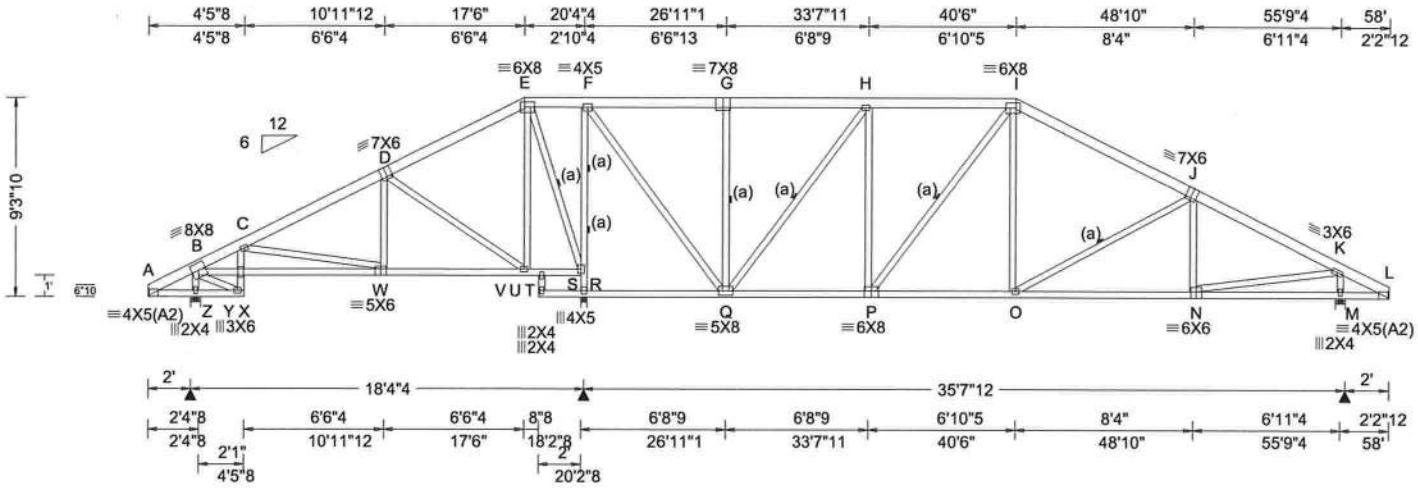

Loading Criteria (psf)

TCLL: 20.00
TCDL: 10.00
BCLL: 0.00
BCDL: 10.00
Des Ld: 40.00
NCBCLL: 10.00
Soffit: 2.00
Load Duration: 1.25
Spacing: 24.0 "

Wind Criteria

Wind Std: ASCE 7-10
Speed: 130 mph
Enclosure: Closed
Risk Category: II
EXP: C
Mean Height: 15.00 ft
TCDL: 5.0 psf
BCDL: 5.0 psf
MWFRS Parallel Dist: h to 2h
C&C Dist a: 5.80 ft
Loc. from endwall: not in 13.00 ft
GCpi: 0.18
Wind Duration: 1.60

Snow Criteria (Pg,Pf in PSF)

Pg: NA Ct: NA CAT: NA
Pf: NA Ce: NA
Lu: NA Cs: NA
Snow Duration: NA

Code / Misc Criteria

Bldg Code: FBC 2017 RES
TPI Std: 2014
Rep Factors Used: Yes
FT/RT:20(0)/10(0)
Plate Type(s):
WAVE

Defl/CSI Criteria

PP Deflection in	loc	L/defl	L/#
VERT(LL): 0.070	O	999	240
VERT(TL): 0.234	O	999	180
HORZ(LL): 0.018	M	-	-
HORZ(TL): 0.039	M	-	-

Creep Factor: 2.0
Max TC CSI: 0.285
Max BC CSI: 0.812
Max Web CSI: 0.840

VIEW Ver: 17.02.00.1013.16

▲ Maximum Reactions (lbs)

Loc	R	/ U	/ Rw	/ Rh	/ RL	/ W
Z	901	/ 29	/ 572	/ -	/ 248	/ 5.5
S	2287	/ 61	/ 1330	/ -	/ -	/ 3.5
M	1621	/ 84	/ 1102	/ -	/ -	/ 5.5

Wind reactions based on MWFRS
Z Min Brg Width Req = 1.5
S Min Brg Width Req = 2.3
M Min Brg Width Req = 1.5
Bearings Z, S, & M are a rigid surface.

Members not listed have forces less than 375#

Maximum Top Chord Forces Per Ply (lbs)

Chords	Tens.	Comp.	Chords	Tens.	Comp.
B - C	362	-1097	H - I	587	-1313
C - D	362	-868	I - J	601	-1689
F - G	475	-813	J - K	601	-2021
G - H	475	-813			

Maximum Bot Chord Forces Per Ply (lbs)

Chords	Tens.	Comp.	Chords	Tens.	Comp.
B - Y	977	-358	Q - P	1304	-283
Y - W	974	-334	P - O	1407	-306
W - V	695	-201	O - N	1730	-448

Maximum Web Forces Per Ply (lbs)

Webs	Tens.	Comp.	Webs	Tens.	Comp.
Z - B	340	-833	F - Q	1489	-353
D - V	239	-663	G - Q	163	-404
E - V	434	-112	Q - H	188	-840
E - R	150	-680	I - O	449	-57
R - S	514	-2146	N - K	1607	-399
R - F	433	-1526	K - M	509	-1500

Lumber

Top chord 2x6 SP #2
Bot chord 2x4 SP #2
Webs 2x4 SP #3

Bracing

(a) Continuous lateral restraint equally spaced on member.

Plating Notes

All plates are 3X4 except as noted.

Purlins

In lieu of structural panels use purlins to brace all flat TC @ 24" oc.

Wind

Wind loads based on MWFRS with additional C&C member design.

Left and right cantilevers are exposed to wind

Additional Notes

WARNING: Furnish a copy of this DWG to the installation contractor. Special care must be taken during handling, shipping and installation of trusses. See "WARNING" note below.

The overall height of this truss excluding overhang is 9-3-10.

Laterally brace BC above filler @ 24" O.C. (or as designed) Including a brace on BC directly above both ends of filler (if no rigid diaphragm exists at that point)

WILLIAM H. KRICK
LICENSE
No. 70861
STATE OF FLORIDA
PROFESSIONAL ENGINEER

COA #0,278

05/24/2018

****WARNING**** READ AND FOLLOW ALL NOTES ON THIS DRAWING!
****IMPORTANT**** FURNISH THIS DRAWING TO ALL CONTRACTORS INCLUDING THE INSTALLERS

Trusses require extreme care in fabricating, handling, shipping, installing and bracing. Refer to and follow the latest edition of BCSI (Building Component Safety Information, by TPI and SBCA) for safety practices prior to performing these functions. Installers shall provide temporary bracing per BCSI. Unless noted otherwise,top chord shall have properly attached structural sheathing and bottom chord shall have a properly attached rigid ceiling. Locations shown for permanent lateral restraint of webs shall have bracing installed per BCSI sections B3, B7, or B10, as applicable. Apply plates to each face of truss and position as shown above and on the Joint Details, unless noted otherwise. Refer to drawings 160A-Z for standard plate positions.

Alpine, a division of ITW Building Components Group Inc. shall not be responsible for any deviation from this drawing,any failure to build the truss in conformance with ANSI/TPI 1, or for handling, shipping, installation and bracing of trusses**A seal on this drawing or cover page listing this drawing, indicates acceptance of professional engineering responsibility solely for the design shown. The suitability and use of this drawing for any structure is the responsibility of the Building Designer per ANSI/TPI 1 Sec.2.**

For more information see this job's general notes page and these web sites: ALPINE: www.alpineitw.com; TPI: www.tpinst.org; SBCA: www.sbcindustry.com; ICC: www.iccsafe.org

ALPINE™ AN ITW COMPANY
6750 Forum Drive
Suite 305
Orlando FL, 32821

Job Number: 18-2262 FREEMAN **Truss Label:** B03	Ply: 1 Qty: 1	SEQN: 556417 / T2 HIPS FROM: CDM	Cust: R215 JRef: 1Wb72150004 DrwNo: 144.18.0743.17583 KM / BAF 05/24/2018

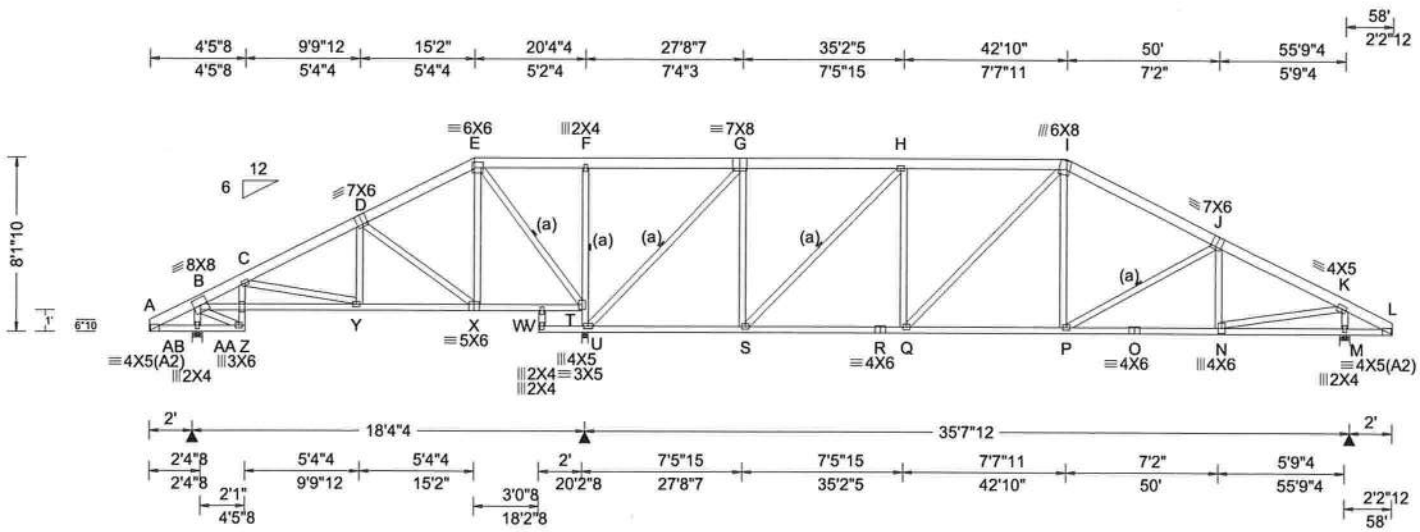

Loading Criteria (psf)

TCLL:	20.00
TCDL:	10.00
BCLL:	0.00
BCDL:	10.00
Des Ld:	40.00
NCBCLL:	10.00
Soffit:	2.00

Load Duration: 1.25
Spacing: 24.0 "

Wind Criteria
Wind Std: ASCE 7-10
Speed: 130 mph
Enclosure: Closed
Risk Category: II
EXP: C
Mean Height: 15.00 ft
TCDL: 5.0 psf
BCDL: 5.0 psf
MWFRS Parallel Dist: h/2 to h
C&C Dist a: 5.80 ft
Loc. from endwall: not in 13.00 ft
GCpi: 0.18
Wind Duration: 1.60

Snow Criteria (Pg,Pf in PSF)
Pg: NA Ct: NA CAT: NA
Pf: NA Ce: NA
Lu: NA Cs: NA
Snow Duration: NA

Code / Misc Criteria
Bldg Code: FBC 2017 RES
TPI Std: 2014
Rep Factors Used: Yes
FT/RT:20(0)/10(0)
Plate Type(s):
WAVE

Defl/CSI Criteria

PP Deflection in	loc	L/defl	L/#
VERT(LL): 0.068	Q	999	240
VERT(TL): 0.230	Q	999	180
HORZ(LL): 0.021	M	-	-
HORZ(TL): 0.044	M	-	-

Creep Factor: 2.0
Max TC CSI: 0.336
Max BC CSI: 0.752
Max Web CSI: 0.929

VIEW Ver: 17.02.00.1013.16

▲ Maximum Reactions (lbs)

Loc	R	/ U	/ Rw	/ Rh	/ RL	/ W
AB	896	/ 173	/ 584	/ -	/ 215	/ 5.5
T	2309	/ 364	/ 1289	/ -	/ -	/ 3.5
M	1609	/ 288	/ 1069	/ -	/ -	/ 5.5

Wind reactions based on MWFRS
AB Min Brg Width Req = 1.5
T Min Brg Width Req = 2.4
M Min Brg Width Req = 1.5
Bearings AB, T, & M are a rigid surface.

Members not listed have forces less than 375#

Maximum Top Chord Forces Per Ply (lbs)

Chords	Tens.	Comp.	Chords	Tens.	Comp.
B - C	350	-1041	H - I	616	-1552
C - D	364	-910	I - J	608	-1785
D - E	298	-452	J - K	580	-1933
G - H	486	-1003			

Maximum Bot Chord Forces Per Ply (lbs)

Chords	Tens.	Comp.	Chords	Tens.	Comp.
B -AA	916	-318	R - Q	1548	-349
AA- Y	914	-297	Q - P	1512	-339
Y - X	745	-213	P - O	1667	-441
T - S	975	-213	O - N	1667	-441
S - R	1548	-349			

Maximum Web Forces Per Ply (lbs)

Webs	Tens.	Comp.	Webs	Tens.	Comp.
AB- B	328	-829	T - G	391	-1618
D - X	215	-540	G - S	748	-116
E - X	417	-106	S - H	193	-816
E - U	153	-682	N - K	1601	-407
U - T	273	-973	K - M	502	-1502
F - U	182	-427			

Lumber
Top chord 2x6 SP #2
Bot chord 2x4 SP #2
Webs 2x4 SP #3

Bracing
(a) Continuous lateral restraint equally spaced on member.

Plating Notes
All plates are 3X4 except as noted.

Purlins
In lieu of structural panels use purlins to brace all flat TC @ 24" oc.

Wind
Wind loads based on MWFRS with additional C&C member design.
Left and right cantilevers are exposed to wind

Additional Notes
WARNING: Furnish a copy of this DWG to the installation contractor. Special care must be taken during handling, shipping and installation of trusses. See "WARNING" note below.
The overall height of this truss excluding overhang is 8-1-10.
Laterally brace BC above filler @ 24" O.C. (or as designed) Including a brace on BC directly above both ends of filler (if no rigid diaphragm exists at that point)

WILLIAM H. KRICK
LICENSE
No. 70861
STATE OF FLORIDA
PROFESSIONAL ENGINEER

COA #0,278

05/24/2018

****WARNING**** READ AND FOLLOW ALL NOTES ON THIS DRAWING!
****IMPORTANT**** FURNISH THIS DRAWING TO ALL CONTRACTORS INCLUDING THE INSTALLERS

Trusses require extreme care in fabricating, handling, shipping, installing and bracing. Refer to and follow the latest edition of BCSI (Building Component Safety Information, by TPI and SBCA) for safety practices prior to performing these functions. Installers shall provide temporary bracing per BCSI. Unless noted otherwise,top chord shall have properly attached structural sheathing and bottom chord shall have a properly attached rigid ceiling. Locations shown for permanent lateral restraint of webs shall have bracing installed per BCSI sections B3, B7, or B10, as applicable. Apply plates to each face of truss and position as shown above and on the Joint Details, unless noted otherwise. Refer to drawings 160A-Z for standard plate positions.

Alpine, a division of ITW Building Components Group Inc. shall not be responsible for any deviation from this drawing,any failure to build the truss in conformance with ANSI/TPI 1, or for handling, shipping, installation and bracing of trusses**A seal on this drawing or cover page listing this drawing, indicates acceptance of professional engineering responsibility solely for the design shown. The suitability and use of this drawing for any structure is the responsibility of the Building Designer per ANSI/TPI 1 Sec.2.**

For more information see this job's general notes page and these web sites: ALPINE: www.alpineitw.com; TPI: www.tpinst.org; SBCA: www.sbcindustry.com; ICC: www.iccsafe.org

ALPINE AN ITW COMPANY
6750 Forum Drive
Suite 305
Orlando FL, 32821

Job Number: 18-2262 FREEMAN **Truss Label:** B04	Ply: 1 Qty: 1	SEQN: 556426 / T1 HIPS FROM: CDM	Cust: R215 JRef: 1Wb72150004 DrwNo: 144.18.0743.23330 KM / BAF 05/24/2018

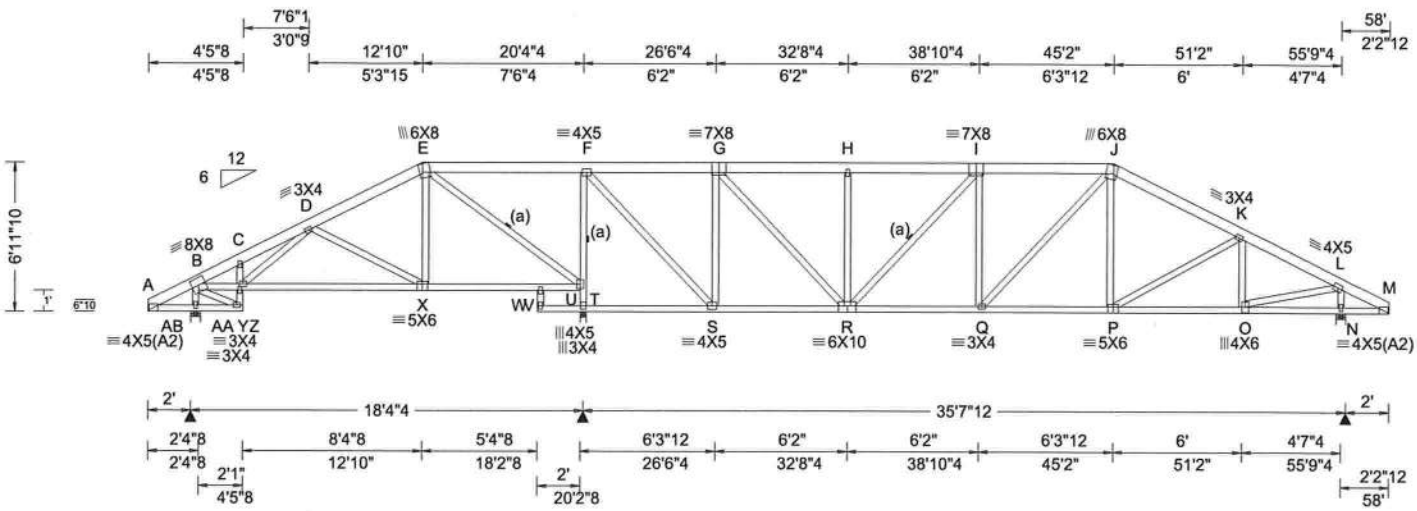

Loading Criteria (psf)

TCLL:	20.00
TCDL:	10.00
BCLL:	0.00
BCDL:	10.00
Des Ld:	40.00
NCBCLL:	10.00
Soffit:	2.00

Load Duration: 1.25
Spacing: 24.0 "

Wind Criteria
Wind Std: ASCE 7-10
Speed: 130 mph
Enclosure: Closed
Risk Category: II
EXP: C
Mean Height: 15.00 ft
TCDL: 5.0 psf
BCDL: 5.0 psf
MWFRS Parallel Dist: h/2 to h
C&C Dist a: 5.80 ft
Loc. from endwall: not in 6.50 ft
GCpi: 0.18
Wind Duration: 1.60

Snow Criteria (Pg,Pf in PSF)
Pg: NA Ct: NA CAT: NA
Pf: NA Ce: NA
Lu: NA Cs: NA
Snow Duration: NA

Code / Misc Criteria
Bldg Code: FBC 2017 RES
TPI Std: 2014
Rep Factors Used: Yes
FT/RT:20(0)/10(0)
Plate Type(s):
WAVE

Defl/CSI Criteria

PP Deflection in	loc	L/defl	L/#
VERT(LL): 0.084	I	999	240
VERT(TL): 0.282	I	999	180
HORZ(LL): 0.019	N	-	-
HORZ(TL): 0.041	N	-	-

Creep Factor: 2.0
Max TC CSI: 0.416
Max BC CSI: 0.642
Max Web CSI: 0.896

VIEW Ver: 17.02.00.1013.16

▲ Maximum Reactions (lbs)

Loc	R	/ U	/ Rw	/ Rh	/ RL	/ W
AB	902	/ 165	/ 595	/ -	/ 182	/ 5.5
U	2285	/ 378	/ 1234	/ -	/ -	/ 3.5
N	1621	/ 287	/ 1045	/ -	/ -	/ 5.5

Wind reactions based on MWFRS
AB Min Brg Width Req = 1.5
U Min Brg Width Req = 2.3
N Min Brg Width Req = 1.5
Bearings AB, U, & N are a rigid surface.

Members not listed have forces less than 375#

Maximum Top Chord Forces Per Ply (lbs)

Chords	Tens.	Comp.	Chords	Tens.	Comp.
B - C	343	- 1087	H - I	632	- 1707
C - D	366	- 1053	I - J	675	- 1896
D - E	319	- 684	J - K	622	- 1894
F - G	458	- 1005	K - L	562	- 1847
G - H	632	- 1707			

Maximum Bot Chord Forces Per Ply (lbs)

Chords	Tens.	Comp.	Chords	Tens.	Comp.
B -AA	940	- 255	S - R	1053	- 238
AA- Y	932	- 249	R - Q	1903	- 445
Y - X	847	- 275	Q - P	1625	- 377
X - V	554	- 103	P - O	1610	- 437
V - T	582	- 114			

Maximum Web Forces Per Ply (lbs)

Webs	Tens.	Comp.	Webs	Tens.	Comp.
AB- B	326	- 836	S - G	302	- 1087
E - X	410	- 58	G - R	987	- 239
E - T	181	- 790	H - R	147	- 382
T - U	562	- 2159	Q - J	403	- 139
T - F	484	- 1676	O - L	1596	- 416
F - S	1613	- 377	L - N	503	- 1527

Lumber
Top chord 2x6 SP #2
Bot chord 2x4 SP #2
Webs 2x4 SP #3

Bracing
(a) Continuous lateral restraint equally spaced on member.

Plating Notes
All plates are 2X4 except as noted.

Purlins
In lieu of structural panels use purlins to brace all flat TC @ 24" oc.

Wind
Wind loads based on MWFRS with additional C&C member design.
Left and right cantilevers are exposed to wind

Additional Notes
WARNING: Furnish a copy of this DWG to the installation contractor. Special care must be taken during handling, shipping and installation of trusses. See "WARNING" note below.
The overall height of this truss excluding overhang is 6-11-10.
Laterally brace BC above filler @ 24" O.C. (or as designed) Including a brace on BC directly above both ends of filler (if no rigid diaphragm exists at that point)

WILLIAM H. KRICK
LICENSE
No. 70861
STATE OF FLORIDA
PROFESSIONAL ENGINEER

COA #0 278

05/24/2018

****WARNING**** READ AND FOLLOW ALL NOTES ON THIS DRAWING!
****IMPORTANT**** FURNISH THIS DRAWING TO ALL CONTRACTORS INCLUDING THE INSTALLERS

Trusses require extreme care in fabricating, handling, shipping, installing and bracing. Refer to and follow the latest edition of BCSI (Building Component Safety Information, by TPI and SBCA) for safety practices prior to performing these functions. Installers shall provide temporary bracing per BCSI. Unless noted otherwise,top chord shall have properly attached structural sheathing and bottom chord shall have a properly attached rigid ceiling. Locations shown for permanent lateral restraint of webs shall have bracing installed per BCSI sections B3, B7, or B10, as applicable. Apply plates to each face of truss and position as shown above and on the Joint Details, unless noted otherwise. Refer to drawings 160A-Z for standard plate positions.

Alpine, a division of ITW Building Components Group Inc. shall not be responsible for any deviation from this drawing,any failure to build the truss in conformance with ANSI/TPI 1, or for handling, shipping, installation and bracing of trusses**A seal on this drawing or cover page listing this drawing, indicates acceptance of professional engineering responsibility solely for the design shown. The suitability and use of this drawing for any structure is the responsibility of the Building Designer per ANSI/TPI 1 Sec.2.**

For more information see this job's general notes page and these web sites: ALPINE: www.alpineitw.com; TPI: www.tpinst.org; SBCA: www.sbcindustry.com; ICC: www.iccsafe.org

ALPINE™ AN ITW COMPANY
6750 Forum Drive
Suite 305
Orlando FL, 32821

Job Number: 18-2262 FREEMAN **Truss Label:** B05	Ply: 1 Qty: 1	SEQN: 556424 / T6 HIPS FROM: CDM	Cust: R215 JRef: 1Wb72150004 DrwNo: 144.18.0743.31940 KM / BAF 05/24/2018

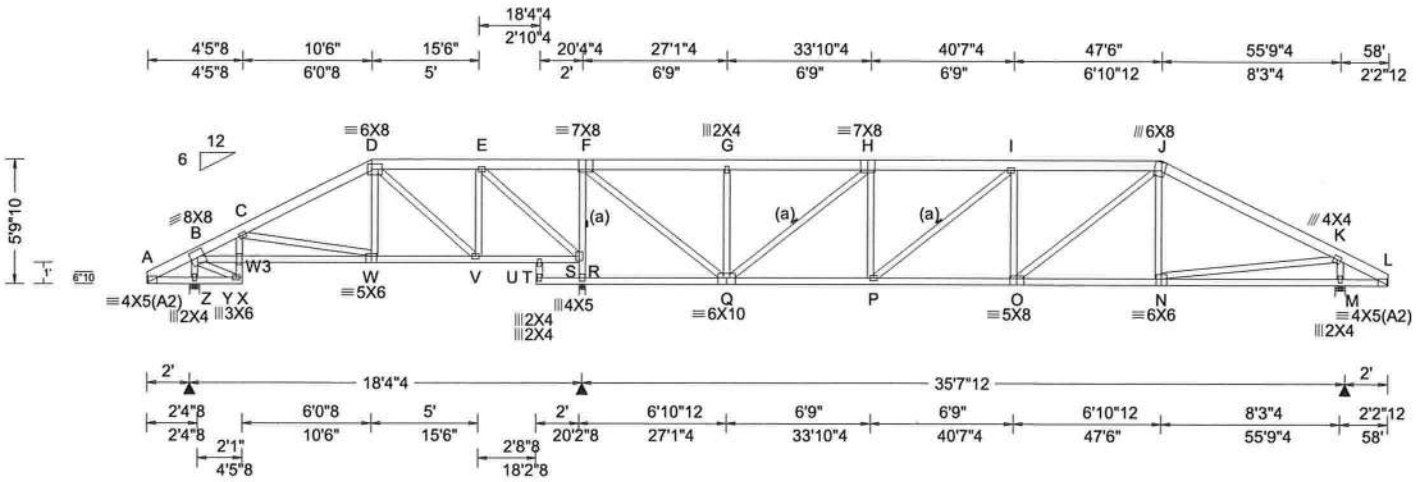

Loading Criteria (psf)

TCLL: 20.00
TCDL: 10.00
BCLL: 0.00
BCDL: 10.00
Des Ld: 40.00
NCBCLL: 10.00
Soffit: 2.00
Load Duration: 1.25
Spacing: 24.0 "

Wind Criteria

Wind Std: ASCE 7-10
Speed: 130 mph
Enclosure: Closed
Risk Category: II
EXP: C
Mean Height: 15.00 ft
TCDL: 5.0 psf
BCDL: 5.0 psf
MWFRS Parallel Dist: h/2 to h
C&C Dist a: 5.80 ft
Loc. from endwall: not in 6.50 ft
GCpi: 0.18
Wind Duration: 1.60

Snow Criteria (Pg,Pf in PSF)

Pg: NA Ct: NA CAT: NA
Pf: NA Ce: NA
Lu: NA Cs: NA
Snow Duration: NA

Code / Misc Criteria

Bldg Code: FBC 2017 RES
TPI Std: 2014
Rep Factors Used: Yes
FT/RT:20(0)/10(0)
Plate Type(s):
WAVE

Defl/CSI Criteria

PP Deflection in	loc	L/defl	L/#
VERT(LL): 0.109	I	999	240
VERT(TL): 0.362	I	999	180
HORZ(LL): 0.019	M	-	-
HORZ(TL): 0.047	Q	-	-

Creep Factor: 2.0
Max TC CSI: 0.335
Max BC CSI: 0.761
Max Web CSI: 0.830

VIEW Ver: 17.02.00.1013.16

▲Maximum Reactions (lbs)

Loc	R	/ U	/ Rw	/ Rh	/ RL	/ W
Z	904	/ 156	/ 592	/ -	/ 148	/ 5.5
S	2289	/ 397	/ 1200	/ -	/ -	/ 3.5
M	1618	/ 284	/ 1014	/ -	/ -	/ 5.5

Wind reactions based on MWFRS
Z Min Brg Width Req = 1.5
S Min Brg Width Req = 2.3
M Min Brg Width Req = 1.5
Bearings Z, S, & M are a rigid surface.

Members not listed have forces less than 375#

Maximum Top Chord Forces Per Ply (lbs)

Chords	Tens.	Comp.	Chords	Tens.	Comp.
B - C	404	-1086	G - H	516	-1352
C - D	330	-883	H - I	715	-2159
D - E	280	-503	I - J	737	-2264
F - G	516	-1352	J - K	605	-2032

Maximum Bot Chord Forces Per Ply (lbs)

Chords	Tens.	Comp.	Chords	Tens.	Comp.
B - Y	965	-326	T - R	520	-96
Y - W	962	-327	Q - P	2146	-516
W - V	717	-152	P - O	2281	-545
V - T	487	-79	O - N	1709	-412

Maximum Web Forces Per Ply (lbs)

Webs	Tens.	Comp.	Webs	Tens.	Comp.
Z - B	324	-837	G - Q	157	-408
E - R	188	-796	Q - H	258	-1040
R - S	570	-2142	O - J	720	-207
R - F	443	-1600	N - K	1459	-333
F - Q	1879	-459	K - M	529	-1462

Lumber

Top chord 2x6 SP #2
Bot chord 2x4 SP #2
Webs 2x4 SP #3 :W3 2x4 SP #2:

Bracing

(a) Continuous lateral restraint equally spaced on member.

Plating Notes

All plates are 3X4 except as noted.

Purlins

In lieu of structural panels use purlins to brace all flat TC @ 24" oc.

Wind

Wind loads based on MWFRS with additional C&C member design.

Left and right cantilevers are exposed to wind

Additional Notes

WARNING: Furnish a copy of this DWG to the installation contractor. Special care must be taken during handling, shipping and installation of trusses. See "WARNING" note below.

The overall height of this truss excluding overhang is 5-9-10.

Laterally brace BC above filler @ 24" O.C. (or as designed) Including a brace on BC directly above both ends of filler (if no rigid diaphragm exists at that point)

WILLIAM H. KRICK
LICENSE
No. 70861
STATE OF FLORIDA
PROFESSIONAL ENGINEER

COA #0278

05/24/2018

****WARNING**** READ AND FOLLOW ALL NOTES ON THIS DRAWING!
****IMPORTANT**** FURNISH THIS DRAWING TO ALL CONTRACTORS INCLUDING THE INSTALLERS

Trusses require extreme care in fabricating, handling, shipping, installing and bracing. Refer to and follow the latest edition of BCSI (Building Component Safety Information, by TPI and SBCA) for safety practices prior to performing these functions. Installers shall provide temporary bracing per BCSI. Unless noted otherwise,top chord shall have properly attached structural sheathing and bottom chord shall have a properly attached rigid ceiling. Locations shown for permanent lateral restraint of webs shall have bracing installed per BCSI sections B3, B7, or B10, as applicable. Apply plates to each face of truss and position as shown above and on the Joint Details, unless noted otherwise. Refer to drawings 160A-Z for standard plate positions.

Alpine, a division of ITW Building Components Group Inc. shall not be responsible for any deviation from this drawing,any failure to build the truss in conformance with ANSI/TPI 1, or for handling, shipping, installation and bracing of trusses**A seal on this drawing or cover page listing this drawing, indicates acceptance of professional engineering responsibility solely for the design shown. The suitability and use of this drawing for any structure is the responsibility of the Building Designer per ANSI/TPI 1 Sec.2.**

For more information see this job's general notes page and these web sites: ALPINE: www.alpineitw.com; TPI: www.tpinst.org; SBCA: www.sbcindustry.com; ICC: www.iccsafe.org

ALPINE
AN ITW COMPANY
6750 Forum Drive
Suite 305
Orlando FL, 32821

Job Number: 18-2262 FREEMAN **Truss Label:** B06	Ply: 2 Qty: 1	SEQN: 556564 / T10 HIPS FROM: CDM Page 1 of 2	Cust: R215 JRef: 1Wb72150004 DrwNo: 144.18.0743.42120 KM / BAF 05/24/2018

2 Complete Trusses Required

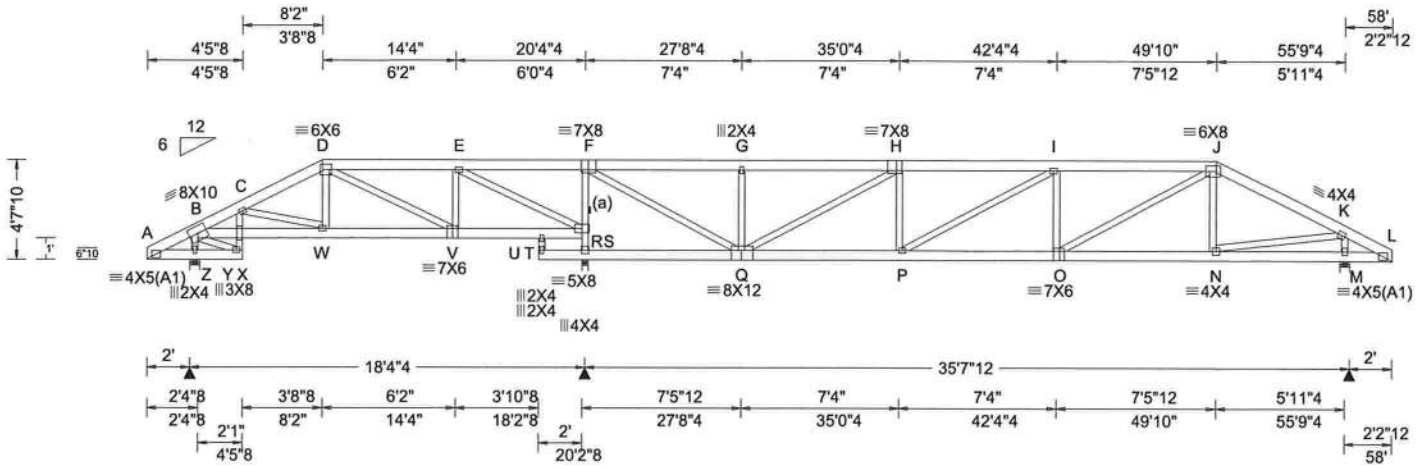

Loading Criteria (psf)	**Wind Criteria**	**Snow Criteria** (Pg,Pf in PSF)	**Defl/CSI Criteria**
TCLL: 20.00 TCDL: 10.00 BCLL: 0.00 BCDL: 10.00 Des Ld: 40.00 NCBCLL: 0.00 Soffit: 2.00 Load Duration: 1.25 Spacing: 24.0 "	Wind Std: ASCE 7-10 Speed: 130 mph Enclosure: Closed Risk Category: II EXP: C Mean Height: 15.00 ft TCDL: 5.0 psf BCDL: 5.0 psf MWFRS Parallel Dist: 0 to h/2 C&C Dist a: 5.80 ft Loc. from endwall: NA GCpi: 0.18 Wind Duration: 1.60	Pg: NA Ct: NA CAT: NA Pf: NA Ce: NA Lu: NA Cs: NA Snow Duration: NA **Code / Misc Criteria** Bldg Code: FBC 2017 RES TPI Std: 2014 Rep Factors Used: No FT/RT:20(0)/10(0) Plate Type(s): WAVE	PP Deflection in loc L/defl L/# VERT(LL): 0.125 P 999 240 VERT(TL): 0.395 P 999 180 HORZ(LL): -0.020 J - - HORZ(TL): 0.044 J - - Creep Factor: 2.0 Max TC CSI: 0.420 Max BC CSI: 0.529 Max Web CSI: 0.815 VIEW Ver: 17.02.00.1013.16

▲ Maximum Reactions (lbs)

Loc	R	/ U	/ Rw	/ Rh	/ RL	/ W
Z	1534	/ 456	/ -	/ -	/ -	/ 5.5
S	4375	/ 1549	/ -	/ -	/ -	/ 3.5
M	2606	/ 905	/ -	/ -	/ -	/ 5.5

Wind reactions based on MWFRS
Z Min Brg Width Req = 1.5
S Min Brg Width Req = 2.2
M Min Brg Width Req = 1.5
Bearings Z, S, & M are a rigid surface.

Members not listed have forces less than 375#

Maximum Top Chord Forces Per Ply (lbs)

Chords	Tens.	Comp.	Chords	Tens.	Comp.
B - C	349	-1078	G - H	602	-1616
C - D	410	-1199	H - I	934	-2509
D - E	293	-933	I - J	933	-2492
F - G	602	-1616	J - K	681	-1804

Maximum Bot Chord Forces Per Ply (lbs)

Chords	Tens.	Comp.	Chords	Tens.	Comp.
B - Y	946	-304	T - R	958	-307
Y - W	946	-306	Q - P	2497	-932
W - V	1063	-364	P - O	2516	-945
V - T	918	-292	O - N	1577	-595

Maximum Web Forces Per Ply (lbs)

Webs	Tens.	Comp.	Webs	Tens.	Comp.
Z - B	237	-723	Q - H	382	-1025
E - R	403	-1205	O - J	1058	-388
R - S	740	-1960	N - K	1464	-556
R - F	558	-1393	K - M	460	-1211
F - Q	1972	-732			

Lumber

Top chord 2x6 SP #2
Bot chord 2x6 SP #2
Webs 2x4 SP #3

Bracing

(a) Continuous lateral restraint equally spaced on member.

Nailnote

Nail Schedule:0.131"x3", min. nails
Top Chord: 1 Row @12.00" o.c.
Bot Chord: 1 Row @12.00" o.c.
Webs : 1 Row @ 4" o.c.
Use equal spacing between rows and stagger nails in each row to avoid splitting.

Plating Notes

All plates are 3X4 except as noted.

Purlins

In lieu of structural panels use purlins to brace all flat TC @ 24" oc.

Wind

Wind loads and reactions based on MWFRS.

Left and right cantilevers are exposed to wind

Laterally brace BC above filler @ 24" O.C. (or as designed) Including a brace on BC directly above both ends of filler (if no rigid diaphragm exists at that point)

Additional Notes

WARNING: Furnish a copy of this DWG to the installation contractor. Special care must be taken during handling, shipping and installation of trusses. See "WARNING" note below.

The overall height of this truss excluding overhang is 4-7-10.

WILLIAM H. KRICK
LICENSE
No. 70861
STATE OF FLORIDA
PROFESSIONAL ENGINEER

COA #0278

05/24/2018

****WARNING**** READ AND FOLLOW ALL NOTES ON THIS DRAWING!
****IMPORTANT**** FURNISH THIS DRAWING TO ALL CONTRACTORS INCLUDING THE INSTALLERS

Trusses require extreme care in fabricating, handling, shipping, installing and bracing. Refer to and follow the latest edition of BCSI (Building Component Safety Information, by TPI and SBCA) for safety practices prior to performing these functions. Installers shall provide temporary bracing per BCSI. Unless noted otherwise,top chord shall have properly attached structural sheathing and bottom chord shall have a properly attached rigid ceiling. Locations shown for permanent lateral restraint of webs shall have bracing installed per BCSI sections B3, B7, or B10, as applicable. Apply plates to each face of truss and position as shown above and on the Joint Details, unless noted otherwise. Refer to drawings 160A-Z for standard plate positions.

Alpine, a division of ITW Building Components Group Inc. shall not be responsible for any deviation from this drawing,any failure to build the truss in conformance with ANSI/TPI 1, or for handling, shipping, installation and bracing of trusses**A seal on this drawing or cover page listing this drawing, indicates acceptance of professional engineering responsibility solely for the design shown. The suitability and use of this drawing for any structure is the responsibility of the Building Designer per ANSI/TPI 1 Sec.2.**

For more information see this job's general notes page and these web sites: ALPINE: www.alpineitw.com; TPI: www.tpinst.org; SBCA: www.sbcindustry.com; ICC: www.iccsafe.org

ALPINE
AN ITW COMPANY
6750 Forum Drive
Suite 305
Orlando FL, 32821

Job Number: 18-2262 FREEMAN **Truss Label:** M03	Ply: 1 Qty: 1	SEQN: 556537 / T36 GABL FROM: CDM	Cust: R215 JRef: 1Wb72150004 DrwNo: 144.18.0745.48977 KM / BAF 05/24/2018

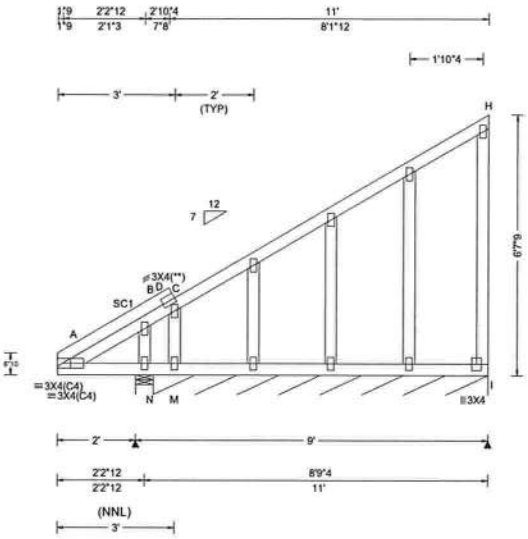

Loading Criteria (psf)
TCLL: 20.00
TCDL: 10.00
BCLL: 0.00
BCDL: 10.00
Des Ld: 40.00
NCBCLL: 10.00
Soffit: 2.00
Load Duration: 1.25
Spacing: 24.0 "

Wind Criteria
Wind Std: ASCE 7-10
Speed: 130 mph
Enclosure: Closed
Risk Category: II
EXP: C
Mean Height: 15.00 ft
TCDL: 5.0 psf
BCDL: 5.0 psf
MWFRS Parallel Dist: 0 to h/2
C&C Dist a: 3.00 ft
Loc. from endwall: Any
GCpi: 0.18
Wind Duration: 1.60

Snow Criteria (Pg,Pf in PSF)
Pg: NA Ct: NA CAT: NA
Pf: NA Ce: NA
Lu: NA Cs: NA
Snow Duration: NA

Code / Misc Criteria
Bldg Code: FBC 2017 RES
TPI Std: 2014
Rep Factors Used: Yes
FT/RT:20(0)/10(0)
Plate Type(s):
WAVE

Defl/CSI Criteria

PP Deflection in	loc	L/defl	L/#
VERT(LL): 0.105	N	271	240
VERT(TL): 0.229	N	184	180
HORZ(LL): -0.065	H	-	-
HORZ(TL): 0.083	H	-	-

Creep Factor: 2.0
Max TC CSI: 0.674
Max BC CSI: 0.757
Max Web CSI: 0.182

VIEW Ver: 17.02.00.1013.16

▲ Maximum Reactions (lbs), or *=PLF

Loc	R	/ U	/ Rw	/ Rh	/ RL	/ W
N	1035	/ -	/ 957	/ -	/ 606	/ 5.5
I*	79	/ 197	/ 55	/ -	/ -	/ 102
M		/ 427				

Wind reactions based on MWFRS
N Min Brg Width Req = 1.5
I Min Brg Width Req = -
Bearings N & N are a rigid surface.

Members not listed have forces less than 375#

Maximum Top Chord Forces Per Ply (lbs)

Chords	Tens.	Comp.	Chords	Tens.	Comp.
A - B	0	-519	C - D	0	-538
A - D	446	-51	D - H	79	-463
B - C	0	-779			

Maximum Bot Chord Forces Per Ply (lbs)

Chords	Tens.	Comp.
A - N	556	-82

Maximum Web Forces Per Ply (lbs)

Webs	Tens.	Comp.
B - N	0	-528

Maximum Gable Forces Per Ply (lbs)

Gables	Tens.	Comp.
C - M	612	-6

Lumber
Top chord 2x4 SP #2
Bot chord 2x4 SP #2
Webs 2x4 SP #3
:Stack Chord SC1 2x4 SP #2:

Plating Notes
All plates are 2X4 except as noted.
(**) 1 plate(s) require special positioning. Refer to scaled plate plot details for special positioning requirements.

Loading
Truss designed to support 2-0-0 top chord outlookers and cladding load not to exceed 2.30 PSF one face and 24.0" span opposite face. Top chord must not be cut or notched, unless specified otherwise.

Wind
Wind loads based on MWFRS with additional C&C member design.
Right end vertical not exposed to wind pressure.
Left cantilever is exposed to wind

Additional Notes
See DWGS A14015ENC101014 & GBLLETIN0118 for gable wind bracing and other requirements.
Stacked top chord must NOT be notched or cut in area (NNL). Dropped top chord braced at 24" oc intervals. Attach stacked top chord (SC) to dropped top chord in notchable area using 3x4 tie-plates 24" oc. Center plate on stacked/dropped chord interface, plate length perpendicular to chord length. Splice top chord in notchable area using 3x6.
The overall height of this truss excluding overhang is 6-7-9.

WILLIAM H. KRICK
LICENSE
No. 70861
STATE OF FLORIDA
PROFESSIONAL ENGINEER

COA #0 278
05/24/2018

****WARNING**** READ AND FOLLOW ALL NOTES ON THIS DRAWING!
****IMPORTANT**** FURNISH THIS DRAWING TO ALL CONTRACTORS INCLUDING THE INSTALLERS

Trusses require extreme care in fabricating, handling, shipping, installing and bracing. Refer to and follow the latest edition of BCSI (Building Component Safety Information, by TPI and SBCA) for safety practices prior to performing these functions. Installers shall provide temporary bracing per BCSI. Unless noted otherwise,top chord shall have properly attached structural sheathing and bottom chord shall have a properly attached rigid ceiling. Locations shown for permanent lateral restraint of webs shall have bracing installed per BCSI sections B3, B7, or B10, as applicable. Apply plates to each face of truss and position as shown above and on the Joint Details, unless noted otherwise. Refer to drawings 160A-Z for standard plate positions.

Alpine, a division of ITW Building Components Group Inc. shall not be responsible for any deviation from this drawing,any failure to build the truss in conformance with ANSI/TPI 1, or for handling, shipping, installation and bracing of trusses**A seal on this drawing or cover page listing this drawing, indicates acceptance of professional engineering responsibility solely for the design shown. The suitability and use of this drawing for any structure is the responsibility of the Building Designer per ANSI/TPI 1 Sec.2.**

For more information see this job's general notes page and these web sites: ALPINE: www.alpineitw.com; TPI: www.tpinst.org; SBCA: www.sbcindustry.com; ICC: www.iccsafe.org

ALPINE™ AN ITW COMPANY
6750 Forum Drive
Suite 305
Orlando FL, 32821

Job Number: 18-2262 FREEMAN **Truss Label:** M04	Ply: 1 Qty: 1	SEQN: 556539 / T27 GABL FROM: CDM	Cust: R215 JRef: 1Wb72150004 DrwNo: 144.18.0748.24910 KM / BAF 05/24/2018

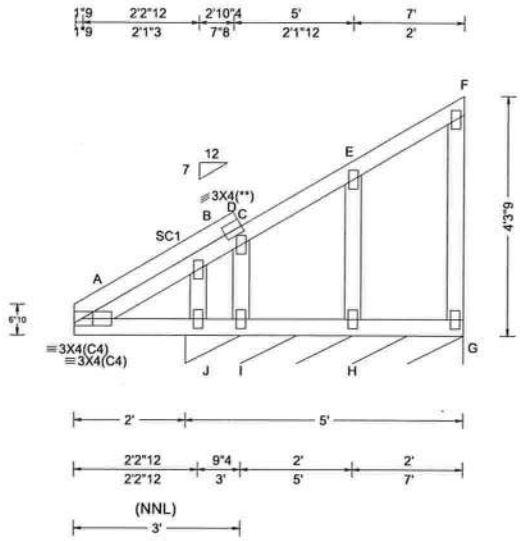

Loading Criteria (psf)
TCLL: 20.00
TCDL: 10.00
BCLL: 0.00
BCDL: 10.00
Des Ld: 40.00
NCBCLL: 10.00
Soffit: 2.00
Load Duration: 1.25
Spacing: 24.0 "

Wind Criteria
Wind Std: ASCE 7-10
Speed: 130 mph
Enclosure: Closed
Risk Category: II
EXP: C
Mean Height: 15.00 ft
TCDL: 5.0 psf
BCDL: 5.0 psf
MWFRS Parallel Dist: 0 to h/2
C&C Dist a: 3.00 ft
Loc. from endwall: Any
GCpi: 0.18
Wind Duration: 1.60

Snow Criteria (Pg,Pf in PSF)
Pg: NA Ct: NA CAT: NA
Pf: NA Ce: NA
Lu: NA Cs: NA
Snow Duration: NA

Code / Misc Criteria
Bldg Code: FBC 2017 RES
TPI Std: 2014
Rep Factors Used: Yes
FT/RT:20(0)/10(0)
Plate Type(s):
WAVE

Defl/CSI Criteria

PP Deflection in	loc	L/defl	L/#
VERT(LL): 0.079	J	303	240
VERT(TL): 0.222	J	159	180
HORZ(LL): -0.042	F	-	-
HORZ(TL): 0.081	F	-	-

Creep Factor: 2.0
Max TC CSI: 0.655
Max BC CSI: 0.734
Max Web CSI: 0.118

VIEW Ver: 17.02.00.1013.16

▲ Maximum Reactions (lbs), or *=PLF

Loc	R	/ U	/ Rw	/ Rh	/ RL	/ W
J*	214	/ 151	/ 127	/ -	/ 111	/ 60.0
I		/ 416				

Wind reactions based on MWFRS
J Min Brg Width Req = -
Bearing J is a rigid surface.

Members not listed have forces less than 375#

Maximum Top Chord Forces Per Ply (lbs)

Chords	Tens.	Comp.	Chords	Tens.	Comp.
A - D	443	-133	C - D	0	-520
B - C	0	-555			

Maximum Bot Chord Forces Per Ply (lbs)

Chords	Tens.	Comp.	Chords	Tens.	Comp.
A - J	514	-58	I - H	542	-50
J - I	517	-52	H - G	552	-53

Maximum Web Forces Per Ply (lbs)

Webs	Tens.	Comp.
B - J	0	-466

Maximum Gable Forces Per Ply (lbs)

Gables	Tens.	Comp.	Gables	Tens.	Comp.
C - I	557	-7	E - H	391	-336

Lumber

Top chord 2x4 SP #2
Bot chord 2x4 SP #2
Webs 2x4 SP #3
:Stack Chord SC1 2x4 SP #2:

Plating Notes

All plates are 2X4 except as noted.

(**) 1 plate(s) require special positioning. Refer to scaled plate plot details for special positioning requirements.

Loading

Truss designed to support 2-0-0 top chord outlookers and cladding load not to exceed 2.30 PSF one face and 24.0" span opposite face. Top chord must not be cut or notched, unless specified otherwise.

Wind

Wind loads based on MWFRS with additional C&C member design.

Right end vertical not exposed to wind pressure.

Left cantilever is exposed to wind

Additional Notes

See DWGS A14015ENC101014 & GBLLETIN0118 for gable wind bracing and other requirements.

Stacked top chord must NOT be notched or cut in area (NNL). Dropped top chord braced at 24" oc intervals. Attach stacked top chord (SC) to dropped top chord in notchable area using 3x4 tie-plates 24" oc. Center plate on stacked/dropped chord interface, plate length perpendicular to chord length. Splice top chord in notchable area using 3x6.

The overall height of this truss excluding overhang is 4-3-9.

WILLIAM H. KRICK
LICENSE
No. 70861
STATE OF FLORIDA
PROFESSIONAL ENGINEER

COA #0 278
05/24/2018

****WARNING**** READ AND FOLLOW ALL NOTES ON THIS DRAWING!
****IMPORTANT**** FURNISH THIS DRAWING TO ALL CONTRACTORS INCLUDING THE INSTALLERS

Trusses require extreme care in fabricating, handling, shipping, installing and bracing. Refer to and follow the latest edition of BCSI (Building Component Safety Information, by TPI and SBCA) for safety practices prior to performing these functions. Installers shall provide temporary bracing per BCSI. Unless noted otherwise,top chord shall have properly attached structural sheathing and bottom chord shall have a properly attached rigid ceiling. Locations shown for permanent lateral restraint of webs shall have bracing installed per BCSI sections B3, B7, or B10, as applicable. Apply plates to each face of truss and position as shown above and on the Joint Details, unless noted otherwise. Refer to drawings 160A-Z for standard plate positions.

Alpine, a division of ITW Building Components Group Inc. shall not be responsible for any deviation from this drawing,any failure to build the truss in conformance with ANSI/TPI 1, or for handling, shipping, installation and bracing of trusses**A seal on this drawing or cover page listing this drawing, indicates acceptance of professional engineering responsibility solely for the design shown. The suitability and use of this drawing for any structure is the responsibility of the Building Designer per ANSI/TPI 1 Sec.2.**

For more information see this job's general notes page and these web sites: ALPINE: www.alpineitw.com; TPI: www.tpinst.org; SBCA: www.sbcindustry.com; ICC: www.iccsafe.org

ALPINE
AN ITW COMPANY
6750 Forum Drive
Suite 305
Orlando FL, 32821

Job Number: 18-2262 FREEMAN **Truss Label:** M05	Ply: 1 Qty: 5	SEQN: 556550 / T50 MONO FROM: CDM	Cust: R215 JRef: 1Wb72150004 DrwNo: 144.18.0748.27057 KM / BAF 05/24/2018

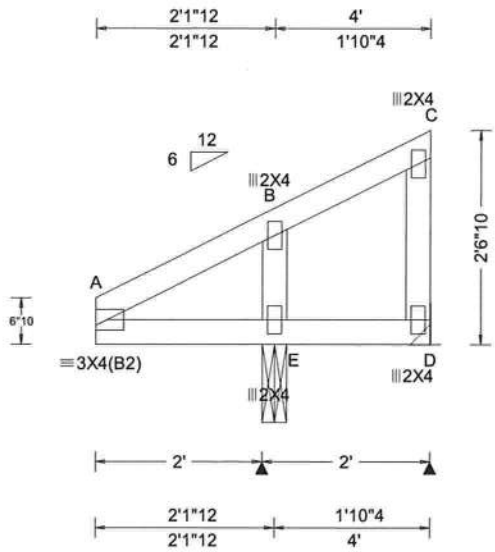

Loading Criteria (psf)	**Wind Criteria**	**Snow Criteria** (Pg,Pf in PSF)	**Defl/CSI Criteria**	**▲ Maximum Reactions (lbs)**
TCLL: 20.00 TCDL: 10.00 BCLL: 0.00 BCDL: 10.00 Des Ld: 40.00 NCBCLL: 10.00 Soffit: 2.00 Load Duration: 1.25 Spacing: 24.0 "	Wind Std: ASCE 7-10 Speed: 130 mph Enclosure: Closed Risk Category: II EXP: C Mean Height: 15.00 ft TCDL: 5.0 psf BCDL: 5.0 psf MWFRS Parallel Dist: h/2 to h C&C Dist a: 3.00 ft Loc. from endwall: not in 9.00 ft GCpi: 0.18 Wind Duration: 1.60	Pg: NA Ct: NA CAT: NA Pf: NA Ce: NA Lu: NA Cs: NA Snow Duration: NA **Code / Misc Criteria** Bldg Code: FBC 2017 RES TPI Std: 2014 Rep Factors Used: Yes FT/RT:20(0)/10(0) Plate Type(s): WAVE	PP Deflection in loc L/defl L/# VERT(LL): 0.028 E 917 240 VERT(TL): 0.099 E 433 180 HORZ(LL): -0.017 C - - HORZ(TL): 0.036 C - - Creep Factor: 2.0 Max TC CSI: 0.186 Max BC CSI: 0.177 Max Web CSI: 0.053 VIEW Ver: 17.02.00.1013.16	Loc R / U / Rw / Rh / RL / W E 355 / 23 / 291 / - / 56 / 3.5 D 24 / 63 / 22 / - / - / - Wind reactions based on MWFRS E Min Brg Width Req = 1.5 D Min Brg Width Req = - Bearing E is a rigid surface. Members not listed have forces less than 375#

Lumber

Top chord 2x4 SP #2
Bot chord 2x4 SP #2
Webs 2x4 SP #3

Wind

Wind loads based on MWFRS with additional C&C member design.

Right end vertical not exposed to wind pressure.

Left cantilever is exposed to wind

Additional Notes

The overall height of this truss excluding overhang is 2-6-10.

WILLIAM H. KRICK
LICENSE
No. 70861
STATE OF
FLORIDA
PROFESSIONAL ENGINEER

COA #0 278
05/24/2018

****WARNING**** READ AND FOLLOW ALL NOTES ON THIS DRAWING!
****IMPORTANT**** FURNISH THIS DRAWING TO ALL CONTRACTORS INCLUDING THE INSTALLERS

Trusses require extreme care in fabricating, handling, shipping, installing and bracing. Refer to and follow the latest edition of BCSI (Building Component Safety Information, by TPI and SBCA) for safety practices prior to performing these functions. Installers shall provide temporary bracing per BCSI. Unless noted otherwise,top chord shall have properly attached structural sheathing and bottom chord shall have a properly attached rigid ceiling. Locations shown for permanent lateral restraint of webs shall have bracing installed per BCSI sections B3, B7, or B10, as applicable. Apply plates to each face of truss and position as shown above and on the Joint Details, unless noted otherwise. Refer to drawings 160A-Z for standard plate positions.

Alpine, a division of ITW Building Components Group Inc. shall not be responsible for any deviation from this drawing,any failure to build the truss in conformance with ANSI/TPI 1, or for handling, shipping, installation and bracing of trusses**A seal on this drawing or cover page listing this drawing, indicates acceptance of professional engineering responsibility solely for the design shown. The suitability and use of this drawing for any structure is the responsibility of the Building Designer per ANSI/TPI 1 Sec.2.**

For more information see this job's general notes page and these web sites: ALPINE: www.alpineitw.com; TPI: www.tpinst.org; SBCA: www.sbcindustry.com; ICC: www.iccsafe.org

ALPINE
AN ITW COMPANY
6750 Forum Drive
Suite 305
Orlando FL, 32821

Job Number: 18-2262 FREEMAN **Truss Label:** P01	Ply: 1 Qty: 9	SEQN: 555979 / T39 COMN FROM: CDM	Cust: R215 JRef: 1Wb72150004 DrwNo: 144.18.0748.29877 KM / BAF 05/24/2018

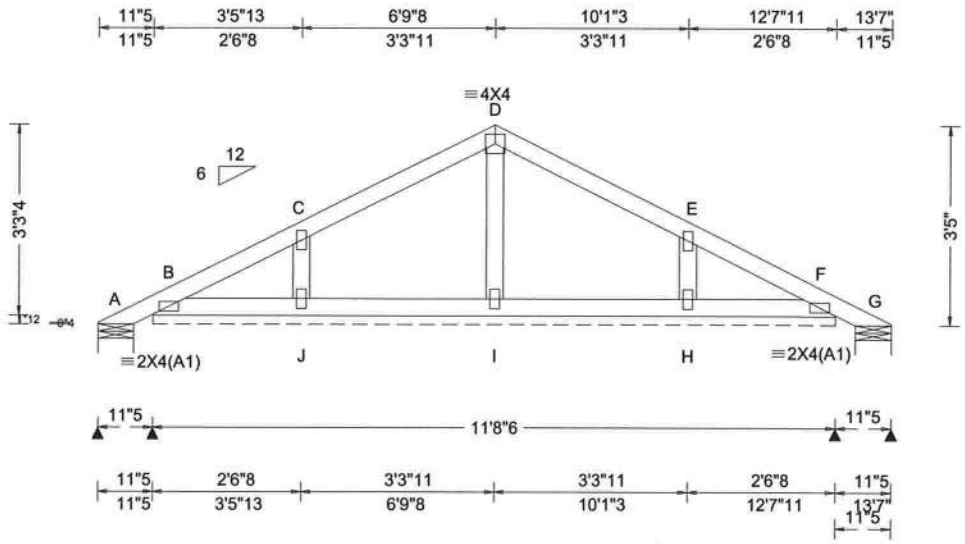

Loading Criteria (psf)
TCLL: 20.00
TCDL: 10.00
BCLL: 0.00
BCDL: 10.00
Des Ld: 40.00
NCBCLL: 0.00
Soffit: 2.00
Load Duration: 1.25
Spacing: 24.0 "

Wind Criteria
Wind Std: ASCE 7-10
Speed: 130 mph
Enclosure: Closed
Risk Category: II
EXP: C
Mean Height: 23.35 ft
TCDL: 5.0 psf
BCDL: 2.0 psf
MWFRS Parallel Dist: h/2 to h
C&C Dist a: 3.00 ft
Loc. from endwall: not in 9.00 ft
GCpi: 0.18
Wind Duration: 1.60

Snow Criteria (Pg,Pf in PSF)
Pg: NA Ct: NA CAT: NA
Pf: NA Ce: NA
Lu: NA Cs: NA
Snow Duration: NA

Code / Misc Criteria
Bldg Code: FBC 2017 RES
TPI Std: 2014
Rep Factors Used: Yes
FT/RT:20(0)/10(0)
Plate Type(s):
WAVE

Defl/CSI Criteria

PP Deflection in	loc	L/defl	L/#
VERT(LL): 0.000	D	999	240
VERT(TL): 0.001	D	999	180
HORZ(LL): 0.001	E	-	-
HORZ(TL): 0.001	E	-	-

Creep Factor: 2.0
Max TC CSI: 0.141
Max BC CSI: 0.059
Max Web CSI: 0.046

VIEW Ver: 17.02.00.1013.16

▲ Maximum Reactions (lbs), or *=PLF

Loc	R	/ U	/ Rw	/ Rh	/ RL	/ W
A	18	/ 34	/ 45	/ -	/ 82	/ 7.3
B*	71	/ 21	/ 47	/ -	/ -	/ 140
G	18	/ 6	/ 14	/ -	/ -	/ 7.3

Wind reactions based on MWFRS
A Min Brg Width Req = 1.5
B Min Brg Width Req = -
G Min Brg Width Req = 1.5
Bearings A, B, & G are a rigid surface.

Members not listed have forces less than 375#

Lumber
Top chord 2x4 SP #2
Bot chord 2x4 SP #2
Webs 2x4 SP #3

Plating Notes
All plates are 2X4 except as noted.

Wind
Wind loads based on MWFRS with additional C&C member design.

Additional Notes
Refer to DWG PB160101014 for piggyback details.
The overall height of this truss excluding overhang is 3-5-0.

WILLIAM H. KRICK
LICENSE
No. 70861
STATE OF FLORIDA
PROFESSIONAL ENGINEER

COA #0 278
05/24/2018

****WARNING**** READ AND FOLLOW ALL NOTES ON THIS DRAWING!
****IMPORTANT**** FURNISH THIS DRAWING TO ALL CONTRACTORS INCLUDING THE INSTALLERS

Trusses require extreme care in fabricating, handling, shipping, installing and bracing. Refer to and follow the latest edition of BCSI (Building Component Safety Information, by TPI and SBCA) for safety practices prior to performing these functions. Installers shall provide temporary bracing per BCSI. Unless noted otherwise,top chord shall have properly attached structural sheathing and bottom chord shall have a properly attached rigid ceiling. Locations shown for permanent lateral restraint of webs shall have bracing installed per BCSI sections B3, B7, or B10, as applicable. Apply plates to each face of truss and position as shown above and on the Joint Details, unless noted otherwise. Refer to drawings 160A-Z for standard plate positions.

Alpine, a division of ITW Building Components Group Inc. shall not be responsible for any deviation from this drawing,any failure to build the truss in conformance with ANSI/TPI 1, or for handling, shipping, installation and bracing of trusses**A seal on this drawing or cover page listing this drawing, indicates acceptance of professional engineering responsibility solely for the design shown. The suitability and use of this drawing for any structure is the responsibility of the Building Designer per ANSI/TPI 1 Sec.2.**

For more information see this job's general notes page and these web sites: ALPINE: www.alpineitw.com; TPI: www.tpinst.org; SBCA: www.sbcindustry.com; ICC: www.iccsafe.org

ALPINE
AN ITW COMPANY
6750 Forum Drive
Suite 305
Orlando FL, 32821

Job Number: 18-2262 FREEMAN **Truss Label:** P02	Ply: 1 Qty: 2	SEQN: 556543 / T29 COMN FROM: CDM	Cust: R215 JRef: 1Wb72150004 DrwNo: 144.18.0748.33193 KM / BAF 05/24/2018

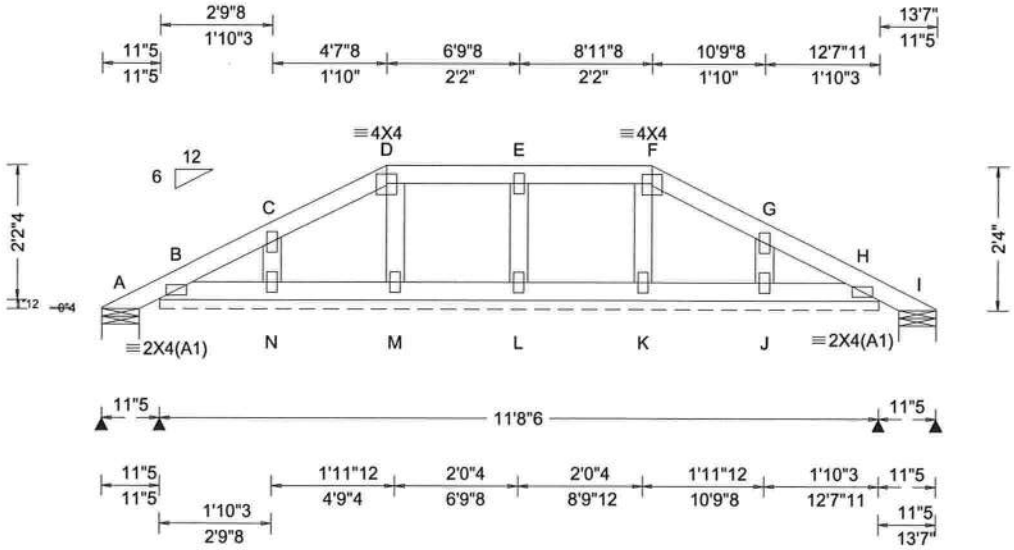

Loading Criteria (psf)
TCLL: 20.00
TCDL: 10.00
BCLL: 0.00
BCDL: 10.00
Des Ld: 40.00
NCBCLL: 0.00
Soffit: 2.00
Load Duration: 1.25
Spacing: 24.0 "

Wind Criteria
Wind Std: ASCE 7-10
Speed: 130 mph
Enclosure: Closed
Risk Category: II
EXP: C
Mean Height: 22.81 ft
TCDL: 5.0 psf
BCDL: 2.0 psf
MWFRS Parallel Dist: h/2 to h
C&C Dist a: 3.00 ft
Loc. from endwall: not in 9.00 ft
GCpi: 0.18
Wind Duration: 1.60

Snow Criteria (Pg,Pf in PSF)
Pg: NA Ct: NA CAT: NA
Pf: NA Ce: NA
Lu: NA Cs: NA
Snow Duration: NA

Code / Misc Criteria
Bldg Code: FBC 2017 RES
TPI Std: 2014
Rep Factors Used: Yes
FT/RT:20(0)/10(0)
Plate Type(s):
WAVE

Defl/CSI Criteria

PP Deflection in	loc	L/defl	L/#
VERT(LL): 0.000	E	999	240
VERT(TL): 0.001	E	999	180
HORZ(LL): 0.000	J	-	-
HORZ(TL): 0.001	J	-	-

Creep Factor: 2.0
Max TC CSI: 0.064
Max BC CSI: 0.022
Max Web CSI: 0.032

VIEW Ver: 17.02.00.1013.16

▲ Maximum Reactions (lbs), or *=PLF

Loc	R	/ U	/ Rw	/ Rh	/ RL	/ W
A	19	/ 22	/ 34	/ -	/ 55	/ 7.3
B*	71	/ 21	/ 46	/ -	/ -	/ 140
I	19	/ 7	/ 17	/ -	/ -	/ 7.3
N		/ 118				
L		/ 108				
J		/ 118				

Wind reactions based on MWFRS
A Min Brg Width Req = 1.5
B Min Brg Width Req = -
I Min Brg Width Req = 1.5
Bearings A, B, & I are a rigid surface.

Members not listed have forces less than 375#

Lumber

Top chord 2x4 SP #2
Bot chord 2x4 SP #2
Webs 2x4 SP #3

Plating Notes

All plates are 2X4 except as noted.

Purlins

In lieu of structural panels use purlins to brace all flat TC @ 24" oc.

Wind

Wind loads based on MWFRS with additional C&C member design.

Additional Notes

Refer to DWG PB160101014 for piggyback details.

The overall height of this truss excluding overhang is 2-4-0.

WILLIAM H. KRICK
LICENSE
No. 70861
STATE OF
FLORIDA
PROFESSIONAL ENGINEER

COA #0 278
05/24/2018

****WARNING**** READ AND FOLLOW ALL NOTES ON THIS DRAWING!
****IMPORTANT**** FURNISH THIS DRAWING TO ALL CONTRACTORS INCLUDING THE INSTALLERS

Trusses require extreme care in fabricating, handling, shipping, installing and bracing. Refer to and follow the latest edition of BCSI (Building Component Safety Information, by TPI and SBCA) for safety practices prior to performing these functions. Installers shall provide temporary bracing per BCSI. Unless noted otherwise,top chord shall have properly attached structural sheathing and bottom chord shall have a properly attached rigid ceiling. Locations shown for permanent lateral restraint of webs shall have bracing installed per BCSI sections B3, B7, or B10, as applicable. Apply plates to each face of truss and position as shown above and on the Joint Details, unless noted otherwise. Refer to drawings 160A-Z for standard plate positions.

Alpine, a division of ITW Building Components Group Inc. shall not be responsible for any deviation from this drawing,any failure to build the truss in conformance with ANSI/TPI 1, or for handling, shipping, installation and bracing of trusses**A seal on this drawing or cover page listing this drawing, indicates acceptance of professional engineering responsibility solely for the design shown. The suitability and use of this drawing for any structure is the responsibility of the Building Designer per ANSI/TPI 1 Sec.2.**

For more information see this job's general notes page and these web sites: ALPINE: www.alpineitw.com; TPI: www.tpinst.org; SBCA: www.sbcindustry.com; ICC: www.iccsafe.org

ALPINE
AN ITW COMPANY
6750 Forum Drive
Suite 305
Orlando FL, 32821

Job Number: 18-2262 FREEMAN **Truss Label:** P03	Ply: 1 Qty: 2	SEQN: 556547 / T32 COMN FROM: CDM	Cust: R215 JRef: 1Wb72150004 DrwNo: 144.18.0748.34880 KM / BAF 05/24/2018

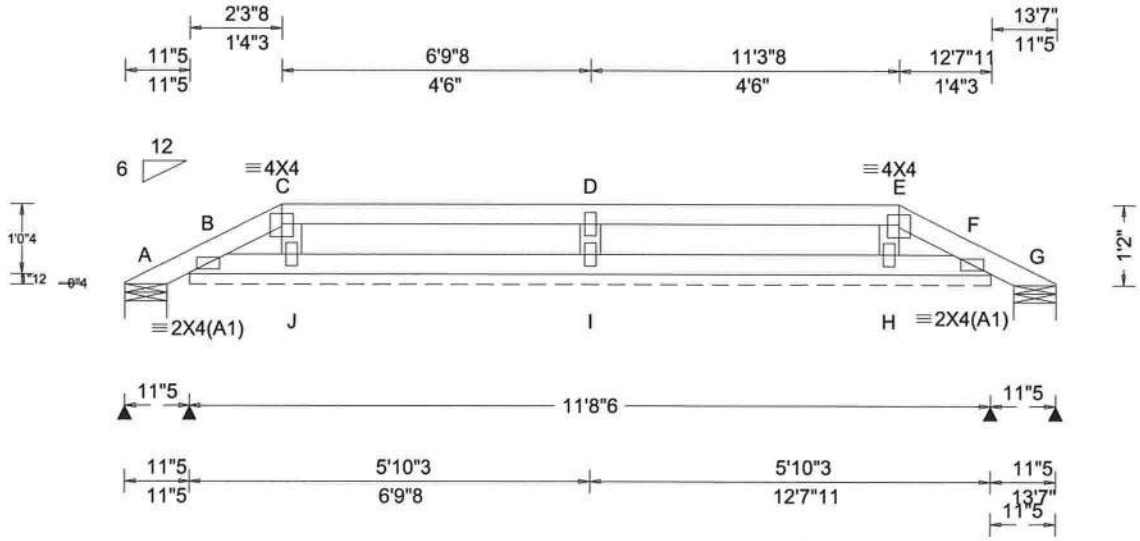

Loading Criteria (psf)	**Wind Criteria**	**Snow Criteria** (Pg,Pf in PSF)	**Defl/CSI Criteria**	**▲ Maximum Reactions (lbs), or *=PLF**
TCLL: 20.00 TCDL: 10.00 BCLL: 0.00 BCDL: 10.00 Des Ld: 40.00 NCBCLL: 0.00 Soffit: 2.00 Load Duration: 1.25 Spacing: 24.0 "	Wind Std: ASCE 7-10 Speed: 130 mph Enclosure: Closed Risk Category: II EXP: C Mean Height: 22.23 ft TCDL: 5.0 psf BCDL: 2.0 psf MWFRS Parallel Dist: h/2 to h C&C Dist a: 3.00 ft Loc. from endwall: not in 9.00 ft GCpi: 0.18 Wind Duration: 1.60	Pg: NA Ct: NA CAT: NA Pf: NA Ce: NA Lu: NA Cs: NA Snow Duration: NA **Code / Misc Criteria** Bldg Code: FBC 2017 RES TPI Std: 2014 Rep Factors Used: Yes FT/RT:20(0)/10(0) Plate Type(s): WAVE	PP Deflection in loc L/defl L/# VERT(LL): 0.000 D 999 240 VERT(TL): 0.001 D 999 180 HORZ(LL): 0.000 H - - HORZ(TL): 0.000 H - - Creep Factor: 2.0 Max TC CSI: 0.307 Max BC CSI: 0.076 Max Web CSI: 0.063 VIEW Ver: 17.02.00.1013.16	Loc R / U / Rw / Rh / RL / W A 22 / 8 / 23 / - / 26 / 7.3 B* 70 / 26 / 44 / - / - / 140 G 22 / 8 / 21 / - / - / 7.3 I / 171 Wind reactions based on MWFRS A Min Brg Width Req = 1.5 B Min Brg Width Req = - G Min Brg Width Req = 1.5 Bearings A, B, & G are a rigid surface. Members not listed have forces less than 375#

Lumber

Top chord 2x4 SP #2
Bot chord 2x4 SP #2
Webs 2x4 SP #3

Plating Notes

All plates are 2X4 except as noted.

Purlins

In lieu of structural panels use purlins to brace all flat TC @ 24" oc.

Wind

Wind loads based on MWFRS with additional C&C member design.

Additional Notes

Refer to DWG PB160101014 for piggyback details.

The overall height of this truss excluding overhang is 1-2-0.

WILLIAM H. KRICK
LICENSE
No. 70861
STATE OF FLORIDA
PROFESSIONAL ENGINEER

COA #0 278

05/24/2018

****WARNING**** READ AND FOLLOW ALL NOTES ON THIS DRAWING!
****IMPORTANT**** FURNISH THIS DRAWING TO ALL CONTRACTORS INCLUDING THE INSTALLERS

Trusses require extreme care in fabricating, handling, shipping, installing and bracing. Refer to and follow the latest edition of BCSI (Building Component Safety Information, by TPI and SBCA) for safety practices prior to performing these functions. Installers shall provide temporary bracing per BCSI. Unless noted otherwise,top chord shall have properly attached structural sheathing and bottom chord shall have a properly attached rigid ceiling. Locations shown for permanent lateral restraint of webs shall have bracing installed per BCSI sections B3, B7, or B10, as applicable. Apply plates to each face of truss and position as shown above and on the Joint Details, unless noted otherwise. Refer to drawings 160A-Z for standard plate positions.

Alpine, a division of ITW Building Components Group Inc. shall not be responsible for any deviation from this drawing,any failure to build the truss in conformance with ANSI/TPI 1, or for handling, shipping, installation and bracing of trusses**A seal on this drawing or cover page listing this drawing, indicates acceptance of professional engineering responsibility solely for the design shown. The suitability and use of this drawing for any structure is the responsibility of the Building Designer per ANSI/TPI 1 Sec.2.**

For more information see this job's general notes page and these web sites: ALPINE: www.alpineitw.com; TPI: www.tpinst.org; SBCA: www.sbcindustry.com; ICC: www.iccsafe.org

ALPINE
AN ITW COMPANY
6750 Forum Drive
Suite 305
Orlando FL, 32821

Job Number: 18-2262 FREEMAN **Truss Label:** V01	Ply: 1 Qty: 1	SEQN: 556562 / T15 GABL FROM: CDM	Cust: R215 JRef: 1Wb72150004 DrwNo: 144.18.0748.37057 KM / BAF 05/24/2018

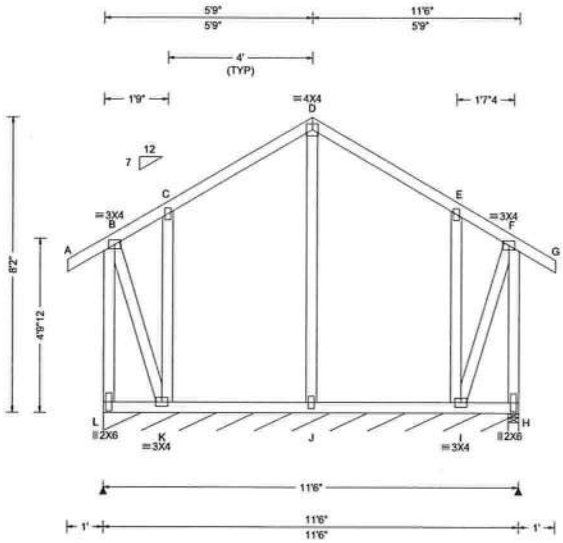

Loading Criteria (psf)

TCLL:	20.00
TCDL:	10.00
BCLL:	0.00
BCDL:	10.00
Des Ld:	40.00
NCBCLL:	10.00
Soffit:	2.00

Load Duration: 1.25
Spacing: 24.0 "

Wind Criteria
Wind Std: ASCE 7-10
Speed: 130 mph
Enclosure: Closed
Risk Category: II
EXP: C
Mean Height: 20.44 ft
TCDL: 5.0 psf
BCDL: 5.0 psf
MWFRS Parallel Dist: h/2 to h
C&C Dist a: 3.00 ft
Loc. from endwall: not in 9.00 ft
GCpi: 0.18
Wind Duration: 1.60

Snow Criteria (Pg,Pf in PSF)
Pg: NA Ct: NA CAT: NA
Pf: NA Ce: NA
Lu: NA Cs: NA
Snow Duration: NA

Code / Misc Criteria
Bldg Code: FBC 2017 RES
TPI Std: 2014
Rep Factors Used: Yes
FT/RT:20(0)/10(0)
Plate Type(s):
WAVE

Defl/CSI Criteria

PP Deflection in	loc	L/defl	L/#
VERT(LL): 0.004	D	999	240
VERT(TL): 0.011	D	999	180
HORZ(LL): 0.012	E	-	-
HORZ(TL): 0.017	E	-	-

Creep Factor: 2.0
Max TC CSI: 0.585
Max BC CSI: 0.124
Max Web CSI: 0.253

VIEW Ver: 17.02.00.1013.16

▲ Maximum Reactions (lbs), or *=PLF

Loc	R	/ U	/ Rw	/ Rh	/ RL	/ W
L*	171	/ 94	/ 91	/ -	/ 21	/ 138
H	171	/ 268	/ 388	/ -	/ -	/ 3.5

Wind reactions based on MWFRS
L Min Brg Width Req = -
H Min Brg Width Req = 1.5
Bearings L & H Fcperp = 565psi.

Members not listed have forces less than 375#

Maximum Web Forces Per Ply (lbs)

Webs	Tens.	Comp.	Webs	Tens.	Comp.
B - K	370	-412	I - F	344	-386

Maximum Gable Forces Per Ply (lbs)

Gables	Tens.	Comp.	Gables	Tens.	Comp.
L - B	298	-413	E - I	419	-557
K - C	419	-557	F - H	268	-382
D - J	0	-514			

Lumber
Top chord 2x4 SP #2
Bot chord 2x4 SP #2
Webs 2x4 SP #3

Plating Notes
All plates are 2X4 except as noted.

Loading
Truss designed to support 2-0-0 top chord outlookers and cladding load not to exceed 2.30 PSF one face and 24.0" span opposite face. Top chord must not be cut or notched, unless specified otherwise.

Wind
Wind loads based on MWFRS with additional C&C member design.
End verticals not exposed to wind pressure.

Additional Notes
See DWGS A14030ENC101014 & GBLLETIN0118 for gable wind bracing and other requirements.
The overall height of this truss excluding overhang is 14-4-15.

WILLIAM H. KRICK
LICENSE
No. 70861
STATE OF FLORIDA
PROFESSIONAL ENGINEER

COA #0 278
05/24/2018

****WARNING**** READ AND FOLLOW ALL NOTES ON THIS DRAWING!
****IMPORTANT**** FURNISH THIS DRAWING TO ALL CONTRACTORS INCLUDING THE INSTALLERS

Trusses require extreme care in fabricating, handling, shipping, installing and bracing. Refer to and follow the latest edition of BCSI (Building Component Safety Information, by TPI and SBCA) for safety practices prior to performing these functions. Installers shall provide temporary bracing per BCSI. Unless noted otherwise,top chord shall have properly attached structural sheathing and bottom chord shall have a properly attached rigid ceiling. Locations shown for permanent lateral restraint of webs shall have bracing installed per BCSI sections B3, B7, or B10, as applicable. Apply plates to each face of truss and position as shown above and on the Joint Details, unless noted otherwise. Refer to drawings 160A-Z for standard plate positions.

Alpine, a division of ITW Building Components Group Inc. shall not be responsible for any deviation from this drawing,any failure to build the truss in conformance with ANSI/TPI 1, or for handling, shipping, installation and bracing of trusses**A seal on this drawing or cover page listing this drawing, indicates acceptance of professional engineering responsibility solely for the design shown. The suitability and use of this drawing for any structure is the responsibility of the Building Designer per ANSI/TPI 1 Sec.2.**

For more information see this job's general notes page and these web sites: ALPINE: www.alpineitw.com; TPI: www.tpinst.org; SBCA: www.sbcindustry.com; ICC: www.iccsafe.org

ALPINE
AN ITW COMPANY
6750 Forum Drive
Suite 305
Orlando FL, 32821

Job Number: 18-2262 FREEMAN **Truss Label:** V02	Ply: 1 Qty: 1	SEQN: 556036 / T56 GABL FROM: CDM	Cust: R215 JRef: 1Wb72150004 DrwNo: 144.18.0748.38830 KM / BAF 05/24/2018

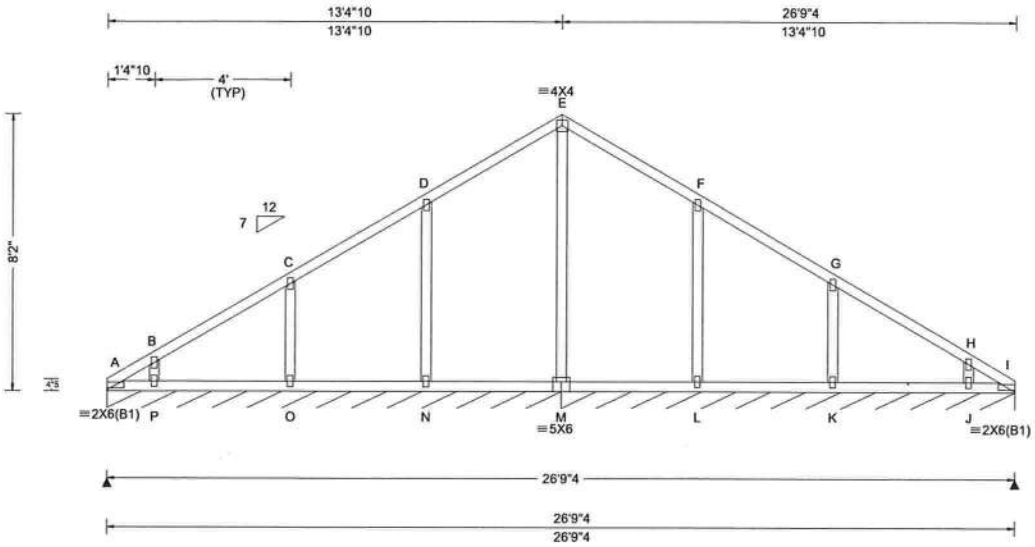

Loading Criteria (psf)

TCLL:	20.00
TCDL:	10.00
BCLL:	0.00
BCDL:	10.00
Des Ld:	40.00
NCBCLL:	10.00
Soffit:	2.00

Load Duration: 1.25
Spacing: 24.0 "

Wind Criteria
Wind Std: ASCE 7-10
Speed: 130 mph
Enclosure: Closed
Risk Category: II
EXP: C
Mean Height: 18.50 ft
TCDL: 5.0 psf
BCDL: 5.0 psf
MWFRS Parallel Dist: 0 to h/2
C&C Dist a: 3.00 ft
Loc. from endwall: Any
GCpi: 0.18
Wind Duration: 1.60

Snow Criteria (Pg,Pf in PSF)
Pg: NA Ct: NA CAT: NA
Pf: NA Ce: NA
Lu: NA Cs: NA
Snow Duration: NA

Code / Misc Criteria
Bldg Code: FBC 2017 RES
TPI Std: 2014
Rep Factors Used: Yes
FT/RT:20(0)/10(0)
Plate Type(s):
WAVE

Defl/CSI Criteria

PP Deflection in	loc	L/defl	L/#
VERT(LL): 0.003	F	999	240
VERT(TL): 0.010	F	999	180
HORZ(LL): 0.005	F	-	-
HORZ(TL): 0.007	F	-	-

Creep Factor: 2.0
Max TC CSI: 0.572
Max BC CSI: 0.112
Max Web CSI: 0.279

VIEW Ver: 17.02.00.1013.16

▲ Maximum Reactions (lbs), or *=PLF

Loc	R	/ U	/ Rw	/ Rh	/ RL	/ W
A*	175	/ 33	/ 92	/ -	/ 31	/ 160
M*	138	/ 46	/ 73	/ -	/ -	/ 160

Wind reactions based on MWFRS
A Min Brg Width Req = -
M Min Brg Width Req = -
Bearings A & M are a rigid surface.

Members not listed have forces less than 375#

Maximum Top Chord Forces Per Ply (lbs)

Chords	Tens.	Comp.	Chords	Tens.	Comp.
D - E	395	-239	E - F	395	-239

Maximum Gable Forces Per Ply (lbs)

Gables	Tens.	Comp.	Gables	Tens.	Comp.
B - P	279	-454	L - F	367	-679
C - O	322	-566	K - G	322	-566
D - N	367	-679	J - H	279	-454
E - M	0	-449			

Lumber
Top chord 2x4 SP #2
Bot chord 2x4 SP #2
Webs 2x4 SP #3

Plating Notes
All plates are 2X4 except as noted.

Loading
Truss designed to support 2-0-0 top chord outlookers and cladding load not to exceed 2.30 PSF one face and 24.0" span opposite face. Top chord must not be cut or notched, unless specified otherwise.

Wind
Wind loads based on MWFRS with additional C&C member design.

Additional Notes
See DWGS A14030ENC101014 & GBLLETIN0118 for gable wind bracing and other requirements.

The overall height of this truss excluding overhang is 14-4-14.

WILLIAM H. KRICK
LICENSE
No. 70861
STATE OF
FLORIDA
PROFESSIONAL ENGINEER

COA #0 278

05/24/2018

****WARNING**** READ AND FOLLOW ALL NOTES ON THIS DRAWING!
****IMPORTANT**** FURNISH THIS DRAWING TO ALL CONTRACTORS INCLUDING THE INSTALLERS

Trusses require extreme care in fabricating, handling, shipping, installing and bracing. Refer to and follow the latest edition of BCSI (Building Component Safety Information, by TPI and SBCA) for safety practices prior to performing these functions. Installers shall provide temporary bracing per BCSI. Unless noted otherwise,top chord shall have properly attached structural sheathing and bottom chord shall have a properly attached rigid ceiling. Locations shown for permanent lateral restraint of webs shall have bracing installed per BCSI sections B3, B7, or B10, as applicable. Apply plates to each face of truss and position as shown above and on the Joint Details, unless noted otherwise. Refer to drawings 160A-Z for standard plate positions.

Alpine, a division of ITW Building Components Group Inc. shall not be responsible for any deviation from this drawing,any failure to build the truss in conformance with ANSI/TPI 1, or for handling, shipping, installation and bracing of trusses**A seal on this drawing or cover page listing this drawing, indicates acceptance of professional engineering responsibility solely for the design shown. The suitability and use of this drawing for any structure is the responsibility of the Building Designer per ANSI/TPI 1 Sec.2.**

For more information see this job's general notes page and these web sites: ALPINE: www.alpineitw.com; TPI: www.tpinst.org; SBCA: www.sbcindustry.com; ICC: www.iccsafe.org

ALPINE
AN ITW COMPANY
6750 Forum Drive
Suite 305
Orlando FL, 32821

Job Number: 18-2262 FREEMAN **Truss Label:** V03	Ply: 1 Qty: 1	SEQN: 555854 / T57 VAL FROM: CDM	Cust: R215 JRef: 1Wb72150004 DrwNo: 144.18.0748.40390 KM / BAF 05/24/2018

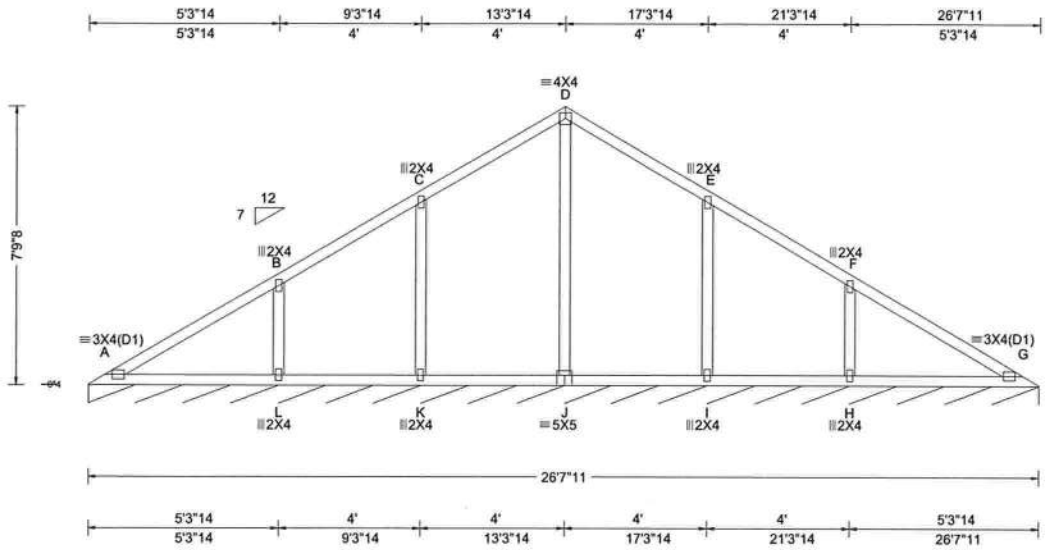

Loading Criteria (psf)
TCLL: 20.00
TCDL: 10.00
BCLL: 0.00
BCDL: 10.00
Des Ld: 40.00
NCBCLL: 10.00
Soffit: 2.00
Load Duration: 1.25
Spacing: 24.0 "

Wind Criteria
Wind Std: ASCE 7-10
Speed: 130 mph
Enclosure: Closed
Risk Category: II
EXP: C
Mean Height: 18.67 ft
TCDL: 5.0 psf
BCDL: 5.0 psf
MWFRS Parallel Dist: h/2 to h
C&C Dist a: 3.00 ft
Loc. from endwall: not in 9.00 ft
GCpi: 0.18
Wind Duration: 1.60

Snow Criteria (Pg,Pf in PSF)
Pg: NA Ct: NA CAT: NA
Pf: NA Ce: NA
Lu: NA Cs: NA
Snow Duration: NA

Code / Misc Criteria
Bldg Code: FBC 2017 RES
TPI Std: 2014
Rep Factors Used: Yes
FT/RT:20(0)/10(0)
Plate Type(s):
WAVE

Defl/CSI Criteria

PP Deflection in	loc	L/defl	L/#
VERT(LL): 0.015	H	999	240
VERT(TL): 0.046	H	999	180
HORZ(LL): -0.006	H	-	-
HORZ(TL): 0.011	H	-	-

Creep Factor: 2.0
Max TC CSI: 0.344
Max BC CSI: 0.230
Max Web CSI: 0.343

VIEW Ver: 17.02.00.1013.16

▲ Maximum Reactions (lbs), or *=PLF

Loc	R	/ U	/ Rw	/ Rh	/ RL	/ W
G*	82	/ 13	/ 43	/ -	/ 7	/ 319

Wind reactions based on MWFRS
G Min Brg Width Req = -
Bearing A is a rigid surface.

Members not listed have forces less than 375#

Lumber

Top chord 2x4 SP #2
Bot chord 2x4 SP #2
Webs 2x4 SP #3

Wind

Wind loads based on MWFRS with additional C&C member design.

Additional Notes

See DWG VAL160101014 for valley details.

The overall height of this truss excluding overhang is 7-9-8.

COA #0 278

05/24/2018

****WARNING**** READ AND FOLLOW ALL NOTES ON THIS DRAWING!
****IMPORTANT**** FURNISH THIS DRAWING TO ALL CONTRACTORS INCLUDING THE INSTALLERS

Trusses require extreme care in fabricating, handling, shipping, installing and bracing. Refer to and follow the latest edition of BCSI (Building Component Safety Information, by TPI and SBCA) for safety practices prior to performing these functions. Installers shall provide temporary bracing per BCSI. Unless noted otherwise,top chord shall have properly attached structural sheathing and bottom chord shall have a properly attached rigid ceiling. Locations shown for permanent lateral restraint of webs shall have bracing installed per BCSI sections B3, B7, or B10, as applicable. Apply plates to each face of truss and position as shown above and on the Joint Details, unless noted otherwise. Refer to drawings 160A-Z for standard plate positions.

Alpine, a division of ITW Building Components Group Inc. shall not be responsible for any deviation from this drawing,any failure to build the truss in conformance with ANSI/TPI 1, or for handling, shipping, installation and bracing of trusses**A seal on this drawing or cover page listing this drawing, indicates acceptance of professional engineering responsibility solely for the design shown. The suitability and use of this drawing for any structure is the responsibility of the Building Designer per ANSI/TPI 1 Sec.2.**

For more information see this job's general notes page and these web sites: ALPINE: www.alpineitw.com; TPI: www.tpinst.org; SBCA: www.sbcindustry.com; ICC: www.iccsafe.org

ALPINE
AN ITW COMPANY
6750 Forum Drive
Suite 305
Orlando FL, 32821

Job Number: 18-2262 FREEMAN **Truss Label:** V04	Ply: 1 Qty: 1	SEQN: 555960 / T59 VAL FROM: CDM	Cust: R215 JRef: 1Wb72150004 DrwNo: 144.18.0748.41740 KM / BAF 05/24/2018

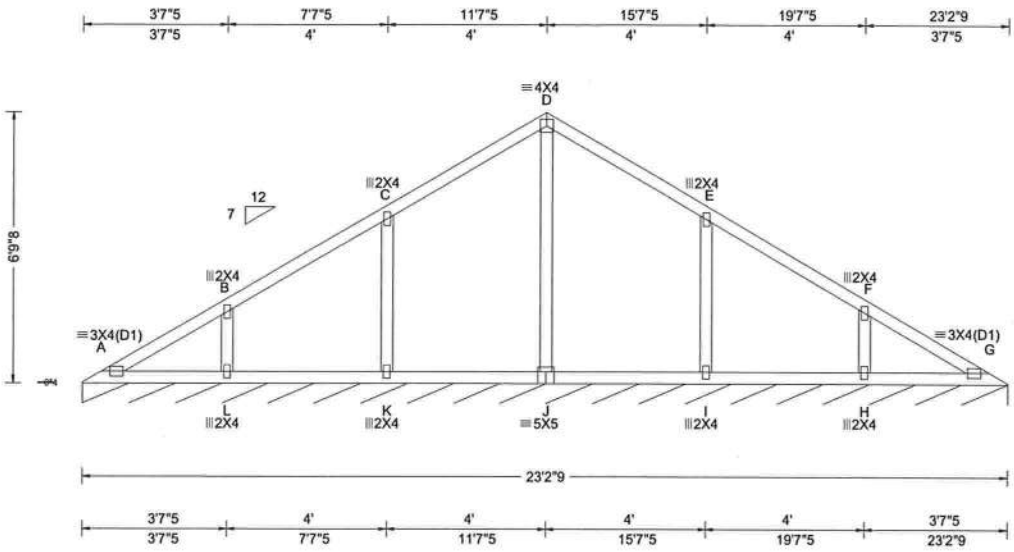

Loading Criteria (psf)	**Wind Criteria**	**Snow Criteria** (Pg,Pf in PSF)	**Defl/CSI Criteria**	**▲Maximum Reactions (lbs), or *=PLF**
TCLL: 20.00 TCDL: 10.00 BCLL: 0.00 BCDL: 10.00 Des Ld: 40.00 NCBCLL: 10.00 Soffit: 2.00 Load Duration: 1.25 Spacing: 24.0 "	Wind Std: ASCE 7-10 Speed: 130 mph Enclosure: Closed Risk Category: II EXP: C Mean Height: 19.17 ft TCDL: 5.0 psf BCDL: 5.0 psf MWFRS Parallel Dist: h/2 to h C&C Dist a: 3.00 ft Loc. from endwall: not in 9.00 ft GCpi: 0.18 Wind Duration: 1.60	Pg: NA Ct: NA CAT: NA Pf: NA Ce: NA Lu: NA Cs: NA Snow Duration: NA **Code / Misc Criteria** Bldg Code: FBC 2017 RES TPI Std: 2014 Rep Factors Used: Yes FT/RT:20(0)/10(0) Plate Type(s): WAVE	PP Deflection in loc L/defl L/# VERT(LL): 0.004 L 999 240 VERT(TL): 0.013 L 999 180 HORZ(LL): -0.002 C - - HORZ(TL): 0.003 L - - Creep Factor: 2.0 Max TC CSI: 0.208 Max BC CSI: 0.128 Max Web CSI: 0.181 VIEW Ver: 17.02.00.1013.16	Loc R / U / Rw / Rh / RL / W G* 82 / 13 / 43 / - / 7 / 278 Wind reactions based on MWFRS G Min Brg Width Req = - Bearing A is a rigid surface. Members not listed have forces less than 375#

Lumber

Top chord 2x4 SP #2
Bot chord 2x4 SP #2
Webs 2x4 SP #3

Wind

Wind loads based on MWFRS with additional C&C member design.

Additional Notes

See DWG VAL160101014 for valley details.

The overall height of this truss excluding overhang is 6-9-8.

WILLIAM H. KRICK
LICENSE
No. 70861
STATE OF FLORIDA
PROFESSIONAL ENGINEER

COA #0 278

05/24/2018

****WARNING**** READ AND FOLLOW ALL NOTES ON THIS DRAWING!
****IMPORTANT**** FURNISH THIS DRAWING TO ALL CONTRACTORS INCLUDING THE INSTALLERS

Trusses require extreme care in fabricating, handling, shipping, installing and bracing. Refer to and follow the latest edition of BCSI (Building Component Safety Information, by TPI and SBCA) for safety practices prior to performing these functions. Installers shall provide temporary bracing per BCSI. Unless noted otherwise,top chord shall have properly attached structural sheathing and bottom chord shall have a properly attached rigid ceiling. Locations shown for permanent lateral restraint of webs shall have bracing installed per BCSI sections B3, B7, or B10, as applicable. Apply plates to each face of truss and position as shown above and on the Joint Details, unless noted otherwise. Refer to drawings 160A-Z for standard plate positions.

Alpine, a division of ITW Building Components Group Inc. shall not be responsible for any deviation from this drawing,any failure to build the truss in conformance with ANSI/TPI 1, or for handling, shipping, installation and bracing of trusses**A seal on this drawing or cover page listing this drawing, indicates acceptance of professional engineering responsibility solely for the design shown. The suitability and use of this drawing for any structure is the responsibility of the Building Designer per ANSI/TPI 1 Sec.2.**

For more information see this job's general notes page and these web sites: ALPINE: www.alpineitw.com; TPI: www.tpinst.org; SBCA: www.sbcindustry.com; ICC: www.iccsafe.org

ALPINE™ AN ITW COMPANY
6750 Forum Drive
Suite 305
Orlando FL, 32821

Job Number: 18-2262 FREEMAN **Truss Label:** V05	Ply: 1 Qty: 1	SEQN: 555934 / T60 VAL FROM: CDM	Cust: R215 JRef: 1Wb72150004 DrwNo: 144.18.0748.42783 KM / BAF 05/24/2018

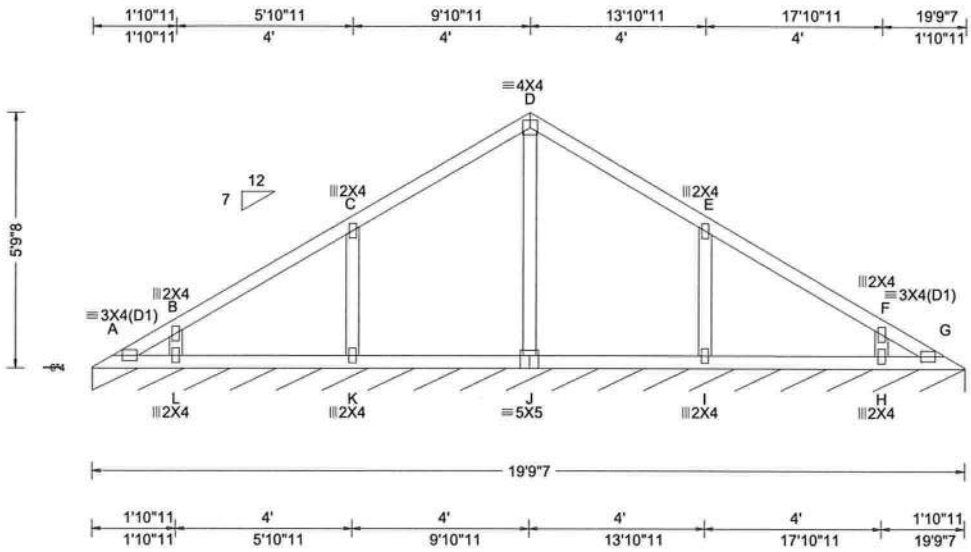

Loading Criteria (psf)	Wind Criteria	Snow Criteria (Pg,Pf in PSF)	Defl/CSI Criteria	▲ Maximum Reactions (lbs), or *=PLF
TCLL: 20.00 TCDL: 10.00 BCLL: 0.00 BCDL: 10.00 Des Ld: 40.00 NCBCLL: 10.00 Soffit: 2.00 Load Duration: 1.25 Spacing: 24.0 "	Wind Std: ASCE 7-10 Speed: 130 mph Enclosure: Closed Risk Category: II EXP: C Mean Height: 19.67 ft TCDL: 5.0 psf BCDL: 5.0 psf MWFRS Parallel Dist: h to 2h C&C Dist a: 3.00 ft Loc. from endwall: not in 9.00 ft GCpi: 0.18 Wind Duration: 1.60	Pg: NA Ct: NA CAT: NA Pf: NA Ce: NA Lu: NA Cs: NA Snow Duration: NA **Code / Misc Criteria** Bldg Code: FBC 2017 RES TPI Std: 2014 Rep Factors Used: Yes FT/RT:20(0)/10(0) Plate Type(s): WAVE	PP Deflection in loc L/defl L/# VERT(LL): 0.001 D 999 240 VERT(TL): 0.003 D 999 180 HORZ(LL): -0.001 C - - HORZ(TL): 0.002 C - - Creep Factor: 2.0 Max TC CSI: 0.215 Max BC CSI: 0.114 Max Web CSI: 0.106 VIEW Ver: 17.02.00.1013.16	Loc R / U / Rw / Rh / RL / W G* 82 / 4 / 43 / - / 7 / 237 Wind reactions based on MWFRS G Min Brg Width Req = - Bearing A is a rigid surface. Members not listed have forces less than 375#

Lumber

Top chord 2x4 SP #2
Bot chord 2x4 SP #2
Webs 2x4 SP #3

Wind

Wind loads based on MWFRS with additional C&C member design.

Additional Notes

See DWG VAL160101014 for valley details.

The overall height of this truss excluding overhang is 5-9-8.

WILLIAM H. KRICK
LICENSE
No. 70861
STATE OF FLORIDA
PROFESSIONAL ENGINEER

COA #0 278

05/24/2018

****WARNING**** READ AND FOLLOW ALL NOTES ON THIS DRAWING!
****IMPORTANT**** FURNISH THIS DRAWING TO ALL CONTRACTORS INCLUDING THE INSTALLERS

Trusses require extreme care in fabricating, handling, shipping, installing and bracing. Refer to and follow the latest edition of BCSI (Building Component Safety Information, by TPI and SBCA) for safety practices prior to performing these functions. Installers shall provide temporary bracing per BCSI. Unless noted otherwise,top chord shall have properly attached structural sheathing and bottom chord shall have a properly attached rigid ceiling. Locations shown for permanent lateral restraint of webs shall have bracing installed per BCSI sections B3, B7, or B10, as applicable. Apply plates to each face of truss and position as shown above and on the Joint Details, unless noted otherwise. Refer to drawings 160A-Z for standard plate positions.

Alpine, a division of ITW Building Components Group Inc. shall not be responsible for any deviation from this drawing,any failure to build the truss in conformance with ANSI/TPI 1, or for handling, shipping, installation and bracing of trusses**A seal on this drawing or cover page listing this drawing, indicates acceptance of professional engineering responsibility solely for the design shown. The suitability and use of this drawing for any structure is the responsibility of the Building Designer per ANSI/TPI 1 Sec.2.**

For more information see this job's general notes page and these web sites: ALPINE: www.alpineitw.com; TPI: www.tpinst.org; SBCA: www.sbcindustry.com; ICC: www.iccsafe.org

ALPINE AN ITW COMPANY
6750 Forum Drive
Suite 305
Orlando FL, 32821

Job Number: 18-2262 FREEMAN **Truss Label:** V06	Ply: 1 Qty: 1	SEQN: 555887 / T61 VAL FROM: CDM	Cust: R215 JRef: 1Wb72150004 DrwNo: 144.18.0749.23560 KM / BAF 05/24/2018

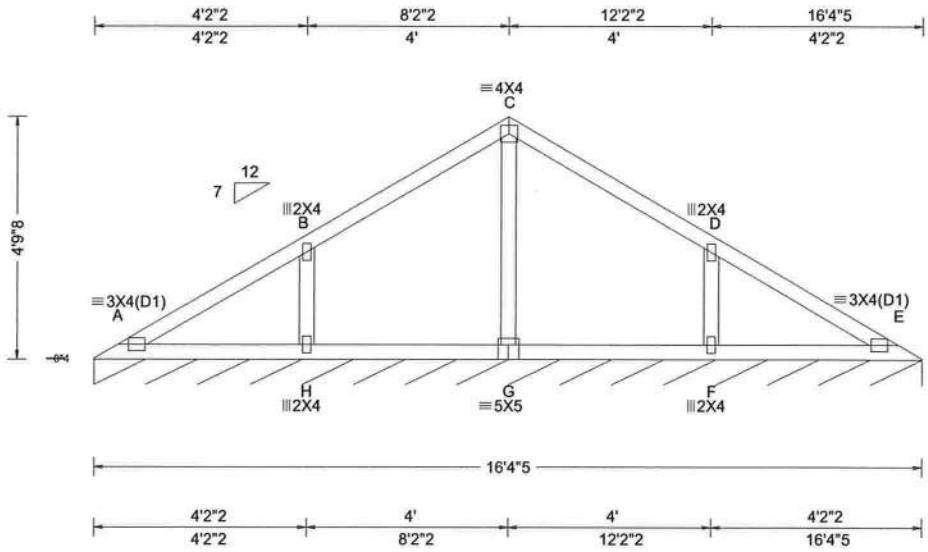

Loading Criteria (psf)	Wind Criteria	Snow Criteria (Pg,Pf in PSF)	Defl/CSI Criteria	▲ Maximum Reactions (lbs), or *=PLF
TCLL: 20.00 TCDL: 10.00 BCLL: 0.00 BCDL: 10.00 Des Ld: 40.00 NCBCLL: 10.00 Soffit: 2.00 Load Duration: 1.25 Spacing: 24.0 "	Wind Std: ASCE 7-10 Speed: 130 mph Enclosure: Closed Risk Category: II EXP: C Mean Height: 20.17 ft TCDL: 5.0 psf BCDL: 5.0 psf MWFRS Parallel Dist: h to 2h C&C Dist a: 3.00 ft Loc. from endwall: not in 9.00 ft GCpi: 0.18 Wind Duration: 1.60	Pg: NA Ct: NA CAT: NA Pf: NA Ce: NA Lu: NA Cs: NA Snow Duration: NA **Code / Misc Criteria** Bldg Code: FBC 2017 RES TPI Std: 2014 Rep Factors Used: Yes FT/RT:20(0)/10(0) Plate Type(s): WAVE	PP Deflection in loc L/defl L/# VERT(LL): 0.006 H 999 240 VERT(TL): 0.018 H 999 180 HORZ(LL): 0.002 H - - HORZ(TL): 0.004 H - - Creep Factor: 2.0 Max TC CSI: 0.310 Max BC CSI: 0.152 Max Web CSI: 0.106 VIEW Ver: 17.02.00.1013.16	Loc R / U / Rw / Rh / RL / W E* 82 / 4 / 42 / - / 7 / 196 Wind reactions based on MWFRS E Min Brg Width Req = - Bearing A is a rigid surface. Members not listed have forces less than 375#

Lumber

Top chord 2x4 SP #2
Bot chord 2x4 SP #2
Webs 2x4 SP #3

Wind

Wind loads based on MWFRS with additional C&C member design.

Additional Notes

See DWG VAL160101014 for valley details.

The overall height of this truss excluding overhang is 4-9-8.

WILLIAM H. KRICK
LICENSE
No. 70861
STATE OF
FLORIDA
PROFESSIONAL ENGINEER

COA #0 278

05/24/2018

****WARNING**** READ AND FOLLOW ALL NOTES ON THIS DRAWING!
****IMPORTANT**** FURNISH THIS DRAWING TO ALL CONTRACTORS INCLUDING THE INSTALLERS

Trusses require extreme care in fabricating, handling, shipping, installing and bracing. Refer to and follow the latest edition of BCSI (Building Component Safety Information, by TPI and SBCA) for safety practices prior to performing these functions. Installers shall provide temporary bracing per BCSI. Unless noted otherwise,top chord shall have properly attached structural sheathing and bottom chord shall have a properly attached rigid ceiling. Locations shown for permanent lateral restraint of webs shall have bracing installed per BCSI sections B3, B7, or B10, as applicable. Apply plates to each face of truss and position as shown above and on the Joint Details, unless noted otherwise. Refer to drawings 160A-Z for standard plate positions.

Alpine, a division of ITW Building Components Group Inc. shall not be responsible for any deviation from this drawing,any failure to build the truss in conformance with ANSI/TPI 1, or for handling, shipping, installation and bracing of trusses**A seal on this drawing or cover page listing this drawing, indicates acceptance of professional engineering responsibility solely for the design shown. The suitability and use of this drawing for any structure is the responsibility of the Building Designer per ANSI/TPI 1 Sec.2.**

For more information see this job's general notes page and these web sites: ALPINE: www.alpineitw.com; TPI: www.tpinst.org; SBCA: www.sbcindustry.com; ICC: www.iccsafe.org

ALPINE
AN ITW COMPANY
6750 Forum Drive
Suite 305
Orlando FL, 32821

Job Number: 18-2262 FREEMAN **Truss Label:** V07	Ply: 1 Qty: 1	SEQN: 555956 / T62 VAL FROM: CDM	Cust: R215 JRef: 1Wb72150004 DrwNo: 144.18.0749.27733 KM / BAF 05/24/2018

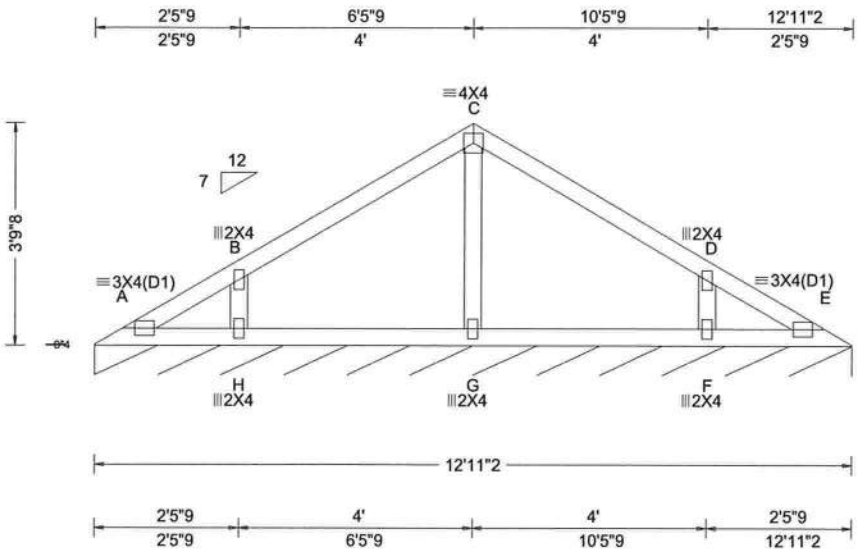

Loading Criteria (psf)
TCLL: 20.00
TCDL: 10.00
BCLL: 0.00
BCDL: 10.00
Des Ld: 40.00
NCBCLL: 10.00
Soffit: 2.00
Load Duration: 1.25
Spacing: 24.0 "

Wind Criteria
Wind Std: ASCE 7-10
Speed: 130 mph
Enclosure: Closed
Risk Category: II
EXP: C
Mean Height: 20.67 ft
TCDL: 5.0 psf
BCDL: 5.0 psf
MWFRS Parallel Dist: h to 2h
C&C Dist a: 3.00 ft
Loc. from endwall: not in 9.00 ft
GCpi: 0.18
Wind Duration: 1.60

Snow Criteria (Pg,Pf in PSF)
Pg: NA Ct: NA CAT: NA
Pf: NA Ce: NA
Lu: NA Cs: NA
Snow Duration: NA

Code / Misc Criteria
Bldg Code: FBC 2017 RES
TPI Std: 2014
Rep Factors Used: Yes
FT/RT:20(0)/10(0)
Plate Type(s):
WAVE

Defl/CSI Criteria

PP Deflection in	loc	L/defl	L/#
VERT(LL): 0.001	C	999	240
VERT(TL): 0.002	C	999	180
HORZ(LL): -0.001	B	-	-
HORZ(TL): 0.001	B	-	-

Creep Factor: 2.0
Max TC CSI: 0.204
Max BC CSI: 0.115
Max Web CSI: 0.052

VIEW Ver: 17.02.00.1013.16

▲ Maximum Reactions (lbs), or *=PLF

Loc	R	/ U	/ Rw	/ Rh	/ RL	/ W
E*	82	/ 4	/ 42	/ -	/ 7	/ 155

Wind reactions based on MWFRS
E Min Brg Width Req = -
Bearing A is a rigid surface.

Members not listed have forces less than 375#

Lumber

Top chord 2x4 SP #2
Bot chord 2x4 SP #2
Webs 2x4 SP #3

Wind

Wind loads based on MWFRS with additional C&C member design.

Additional Notes

See DWG VAL160101014 for valley details.

The overall height of this truss excluding overhang is 3-9-8.

COA #0 278

05/24/2018

****WARNING**** READ AND FOLLOW ALL NOTES ON THIS DRAWING!
****IMPORTANT**** FURNISH THIS DRAWING TO ALL CONTRACTORS INCLUDING THE INSTALLERS

Trusses require extreme care in fabricating, handling, shipping, installing and bracing. Refer to and follow the latest edition of BCSI (Building Component Safety Information, by TPI and SBCA) for safety practices prior to performing these functions. Installers shall provide temporary bracing per BCSI. Unless noted otherwise,top chord shall have properly attached structural sheathing and bottom chord shall have a properly attached rigid ceiling. Locations shown for permanent lateral restraint of webs shall have bracing installed per BCSI sections B3, B7, or B10, as applicable. Apply plates to each face of truss and position as shown above and on the Joint Details, unless noted otherwise. Refer to drawings 160A-Z for standard plate positions.

Alpine, a division of ITW Building Components Group Inc. shall not be responsible for any deviation from this drawing,any failure to build the truss in conformance with ANSI/TPI 1, or for handling, shipping, installation and bracing of trusses**A seal on this drawing or cover page listing this drawing, indicates acceptance of professional engineering responsibility solely for the design shown. The suitability and use of this drawing for any structure is the responsibility of the Building Designer per ANSI/TPI 1 Sec.2.**

For more information see this job's general notes page and these web sites: ALPINE: www.alpineitw.com; TPI: www.tpinst.org; SBCA: www.sbcindustry.com; ICC: www.iccsafe.org

ALPINE™ AN ITW COMPANY
6750 Forum Drive
Suite 305
Orlando FL, 32821

Job Number: 18-2262 FREEMAN **Truss Label:** V08	Ply: 1 Qty: 1	SEQN: 555929 / T63 VAL FROM: CDM	Cust: R215 JRef: 1Wb72150004 DrwNo: 144.18.0749.29913 KM / BAF 05/24/2018

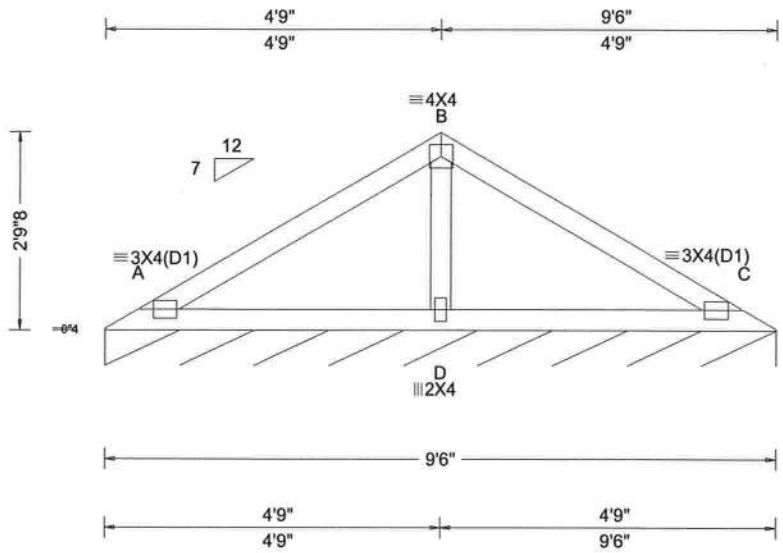

Loading Criteria (psf)
TCLL: 20.00
TCDL: 10.00
BCLL: 0.00
BCDL: 10.00
Des Ld: 40.00
NCBCLL: 10.00
Soffit: 2.00
Load Duration: 1.25
Spacing: 24.0 "

Wind Criteria
Wind Std: ASCE 7-10
Speed: 130 mph
Enclosure: Closed
Risk Category: II
EXP: C
Mean Height: 21.17 ft
TCDL: 5.0 psf
BCDL: 5.0 psf
MWFRS Parallel Dist: h to 2h
C&C Dist a: 3.00 ft
Loc. from endwall: not in 9.00 ft
GCpi: 0.18
Wind Duration: 1.60

Snow Criteria (Pg,Pf in PSF)
Pg: NA Ct: NA CAT: NA
Pf: NA Ce: NA
Lu: NA Cs: NA
Snow Duration: NA

Code / Misc Criteria
Bldg Code: FBC 2017 RES
TPI Std: 2014
Rep Factors Used: Yes
FT/RT:20(0)/10(0)
Plate Type(s):
WAVE

Defl/CSI Criteria

PP Deflection in	loc	L/defl	L/#
VERT(LL): 0.011	D	999	240
VERT(TL): 0.035	D	999	180
HORZ(LL): -0.005	D	-	-
HORZ(TL): 0.011	D	-	-

Creep Factor: 2.0
Max TC CSI: 0.312
Max BC CSI: 0.253
Max Web CSI: 0.102

VIEW Ver: 17.02.00.1013.16

▲ Maximum Reactions (lbs), or *=PLF

Loc	R	/ U	/ Rw	/ Rh	/ RL	/ W
C*	81	/ 4	/ 41	/ -	/ 7	/ 113

Wind reactions based on MWFRS
C Min Brg Width Req = -
Bearing A is a rigid surface.

Members not listed have forces less than 375#

Maximum Web Forces Per Ply (lbs)

Webs	Tens.	Comp.
B - D	216	-490

Lumber

Top chord 2x4 SP #2
Bot chord 2x4 SP #2
Webs 2x4 SP #3

Wind

Wind loads based on MWFRS with additional C&C member design.

Additional Notes

See DWG VAL160101014 for valley details.

The overall height of this truss excluding overhang is 2-9-8.

WILLIAM H. KRICK
LICENSE
No. 70861
STATE OF FLORIDA
PROFESSIONAL ENGINEER

COA #0278

05/24/2018

****WARNING**** READ AND FOLLOW ALL NOTES ON THIS DRAWING!
****IMPORTANT**** FURNISH THIS DRAWING TO ALL CONTRACTORS INCLUDING THE INSTALLERS

Trusses require extreme care in fabricating, handling, shipping, installing and bracing. Refer to and follow the latest edition of BCSI (Building Component Safety Information, by TPI and SBCA) for safety practices prior to performing these functions. Installers shall provide temporary bracing per BCSI. Unless noted otherwise,top chord shall have properly attached structural sheathing and bottom chord shall have a properly attached rigid ceiling. Locations shown for permanent lateral restraint of webs shall have bracing installed per BCSI sections B3, B7, or B10, as applicable. Apply plates to each face of truss and position as shown above and on the Joint Details, unless noted otherwise. Refer to drawings 160A-Z for standard plate positions.

Alpine, a division of ITW Building Components Group Inc. shall not be responsible for any deviation from this drawing,any failure to build the truss in conformance with ANSI/TPI 1, or for handling, shipping, installation and bracing of trusses**A seal on this drawing or cover page listing this drawing, indicates acceptance of professional engineering responsibility solely for the design shown. The suitability and use of this drawing for any structure is the responsibility of the Building Designer per ANSI/TPI 1 Sec.2.**

For more information see this job's general notes page and these web sites: ALPINE: www.alpineitw.com; TPI: www.tpinst.org; SBCA: www.sbcindustry.com; ICC: www.iccsafe.org

ALPINE
AN ITW COMPANY
6750 Forum Drive
Suite 305
Orlando FL, 32821

Job Number: 18-2262 FREEMAN **Truss Label:** V09	Ply: 1 Qty: 1	SEQN: 555879 / T64 VAL FROM: CDM	Cust: R215 JRef: 1Wb72150004 DrwNo: 144.18.0749.31260 KM / BAF 05/24/2018

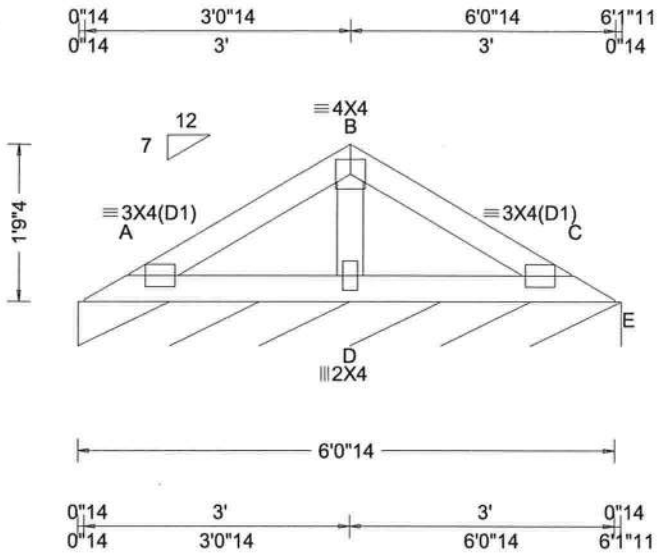

Loading Criteria (psf)	**Wind Criteria**	**Snow Criteria** (Pg,Pf in PSF)	**Defl/CSI Criteria**	**▲Maximum Reactions (lbs), or *=PLF**
TCLL: 20.00 TCDL: 10.00 BCLL: 0.00 BCDL: 10.00 Des Ld: 40.00 NCBCLL: 10.00 Soffit: 2.00 Load Duration: 1.25 Spacing: 24.0 "	Wind Std: ASCE 7-10 Speed: 130 mph Enclosure: Closed Risk Category: II EXP: C Mean Height: 21.65 ft TCDL: 5.0 psf BCDL: 5.0 psf MWFRS Parallel Dist: h to 2h C&C Dist a: 3.00 ft Loc. from endwall: not in 9.00 ft GCpi: 0.18 Wind Duration: 1.60	Pg: NA Ct: NA CAT: NA Pf: NA Ce: NA Lu: NA Cs: NA Snow Duration: NA **Code / Misc Criteria** Bldg Code: FBC 2017 RES TPI Std: 2014 Rep Factors Used: Yes FT/RT:20(0)/10(0) Plate Type(s): WAVE	PP Deflection in loc L/defl L/# VERT(LL): 0.002 D 999 240 VERT(TL): 0.008 D 999 180 HORZ(LL): -0.001 D - - HORZ(TL): 0.003 D - - Creep Factor: 2.0 Max TC CSI: 0.106 Max BC CSI: 0.086 Max Web CSI: 0.043 VIEW Ver: 17.02.00.1013.16	Loc R / U / Rw / Rh / RL / W E* 72 / 4 / 38 / - / 6 / 73.7 Wind reactions based on MWFRS E Min Brg Width Req = - Bearing A is a rigid surface. Members not listed have forces less than 375#

Lumber

Top chord 2x4 SP #2
Bot chord 2x4 SP #2
Webs 2x4 SP #3

Wind

Wind loads based on MWFRS with additional C&C member design.

Additional Notes

See DWG VAL160101014 for valley details.

The overall height of this truss excluding overhang is 1-9-4.

WILLIAM H. KRICK
LICENSE
No. 70861
STATE OF FLORIDA
PROFESSIONAL ENGINEER

COA #0278

05/24/2018

****WARNING**** READ AND FOLLOW ALL NOTES ON THIS DRAWING!
****IMPORTANT**** FURNISH THIS DRAWING TO ALL CONTRACTORS INCLUDING THE INSTALLERS

Trusses require extreme care in fabricating, handling, shipping, installing and bracing. Refer to and follow the latest edition of BCSI (Building Component Safety Information, by TPI and SBCA) for safety practices prior to performing these functions. Installers shall provide temporary bracing per BCSI. Unless noted otherwise,top chord shall have properly attached structural sheathing and bottom chord shall have a properly attached rigid ceiling. Locations shown for permanent lateral restraint of webs shall have bracing installed per BCSI sections B3, B7, or B10, as applicable. Apply plates to each face of truss and position as shown above and on the Joint Details, unless noted otherwise. Refer to drawings 160A-Z for standard plate positions.

Alpine, a division of ITW Building Components Group Inc. shall not be responsible for any deviation from this drawing,any failure to build the truss in conformance with ANSI/TPI 1, or for handling, shipping, installation and bracing of trusses**A seal on this drawing or cover page listing this drawing, indicates acceptance of professional engineering responsibility solely for the design shown. The suitability and use of this drawing for any structure is the responsibility of the Building Designer per ANSI/TPI 1 Sec.2.**

For more information see this job's general notes page and these web sites: ALPINE: www.alpineitw.com; TPI: www.tpinst.org; SBCA: www.sbcindustry.com; ICC: www.iccsafe.org

ALPINE™ AN ITW COMPANY
6750 Forum Drive
Suite 305
Orlando FL, 32821

Job Number: 18-2262 FREEMAN **Truss Label:** V10	Ply: 1 Qty: 1	SEQN: 555993 / T97 VAL FROM: CDM	Cust: R215 JRef: 1Wb72150004 DrwNo: 144.18.0749.32533 KM / BAF 05/24/2018

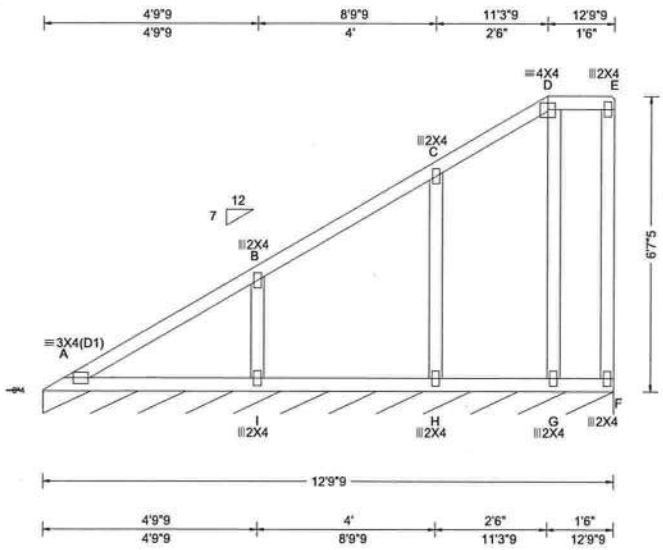

Loading Criteria (psf)
TCLL: 20.00
TCDL: 10.00
BCLL: 0.00
BCDL: 10.00
Des Ld: 40.00
NCBCLL: 10.00
Soffit: 2.00
Load Duration: 1.25
Spacing: 24.0 "

Wind Criteria
Wind Std: ASCE 7-10
Speed: 130 mph
Enclosure: Closed
Risk Category: II
EXP: C
Mean Height: 16.03 ft
TCDL: 5.0 psf
BCDL: 5.0 psf
MWFRS Parallel Dist: > 2h
C&C Dist a: 3.00 ft
Loc. from endwall: not in 9.00 ft
GCpi: 0.18
Wind Duration: 1.60

Snow Criteria (Pg,Pf in PSF)
Pg: NA Ct: NA CAT: NA
Pf: NA Ce: NA
Lu: NA Cs: NA
Snow Duration: NA

Code / Misc Criteria
Bldg Code: FBC 2017 RES
TPI Std: 2014
Rep Factors Used: Yes
FT/RT:20(0)/10(0)
Plate Type(s):
WAVE

Defl/CSI Criteria

PP Deflection in	loc	L/defl	L/#
VERT(LL): 0.011	I	999	240
VERT(TL): 0.034	I	999	180
HORZ(LL): 0.003	I	-	-
HORZ(TL): 0.007	I	-	-

Creep Factor: 2.0
Max TC CSI: 0.270
Max BC CSI: 0.201
Max Web CSI: 0.104

VIEW Ver: 17.02.00.1013.16

▲ Maximum Reactions (lbs), or *=PLF

Loc	R	/ U	/ Rw	/ Rh	/ RL	/ W
F*	82	/ 3	/ 52	/ -	/ 9	/ 153

Wind reactions based on MWFRS
F Min Brg Width Req = -
Bearing A is a rigid surface.

Members not listed have forces less than 375#

Lumber

Top chord 2x4 SP #2
Bot chord 2x4 SP #2
Webs 2x4 SP #3

Purlins

In lieu of structural panels use purlins to brace all flat TC @ 24" oc.

Wind

Wind loads based on MWFRS with additional C&C member design.

Right end vertical not exposed to wind pressure.

Additional Notes

See DWG VAL160101014 for valley details.

The overall height of this truss excluding overhang is 6-7-5.

WILLIAM H. KRICK
LICENSE
No. 70861
STATE OF FLORIDA
PROFESSIONAL ENGINEER

COA #0278

05/24/2018

****WARNING**** READ AND FOLLOW ALL NOTES ON THIS DRAWING!
****IMPORTANT**** FURNISH THIS DRAWING TO ALL CONTRACTORS INCLUDING THE INSTALLERS

Trusses require extreme care in fabricating, handling, shipping, installing and bracing. Refer to and follow the latest edition of BCSI (Building Component Safety Information, by TPI and SBCA) for safety practices prior to performing these functions. Installers shall provide temporary bracing per BCSI. Unless noted otherwise,top chord shall have properly attached structural sheathing and bottom chord shall have a properly attached rigid ceiling. Locations shown for permanent lateral restraint of webs shall have bracing installed per BCSI sections B3, B7, or B10, as applicable. Apply plates to each face of truss and position as shown above and on the Joint Details, unless noted otherwise. Refer to drawings 160A-Z for standard plate positions.

Alpine, a division of ITW Building Components Group Inc. shall not be responsible for any deviation from this drawing,any failure to build the truss in conformance with ANSI/TPI 1, or for handling, shipping, installation and bracing of trusses**A seal on this drawing or cover page listing this drawing, indicates acceptance of professional engineering responsibility solely for the design shown. The suitability and use of this drawing for any structure is the responsibility of the Building Designer per ANSI/TPI 1 Sec.2.**

For more information see this job's general notes page and these web sites: ALPINE: www.alpineitw.com; TPI: www.tpinst.org; SBCA: www.sbcindustry.com; ICC: www.iccsafe.org

ALPINE™ AN ITW COMPANY
6750 Forum Drive
Suite 305
Orlando FL, 32821

Job Number: 18-2262 FREEMAN **Truss Label:** V11	Ply: 1 Qty: 1	SEQN: 556071 / T100 VAL FROM: CDM	Cust: R215 JRef: 1Wb72150004 DrwNo: 144.18.0749.33687 KM / BAF 05/24/2018

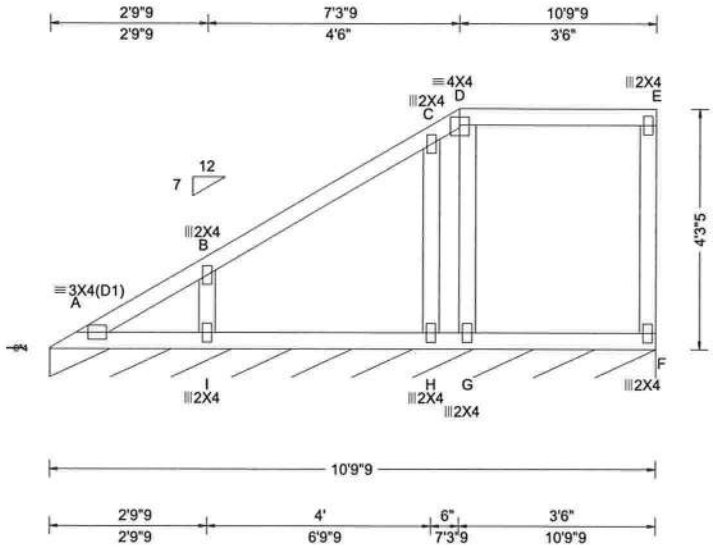

Loading Criteria (psf)	**Wind Criteria**	**Snow Criteria** (Pg,Pf in PSF)	**Defl/CSI Criteria**	**▲Maximum Reactions (lbs), or *=PLF**
TCLL: 20.00 TCDL: 10.00 BCLL: 0.00 BCDL: 10.00 Des Ld: 40.00 NCBCLL: 10.00 Soffit: 2.00 Load Duration: 1.25 Spacing: 24.0 "	Wind Std: ASCE 7-10 Speed: 130 mph Enclosure: Closed Risk Category: II EXP: C Mean Height: 16.03 ft TCDL: 5.0 psf BCDL: 5.0 psf MWFRS Parallel Dist: > 2h C&C Dist a: 3.00 ft Loc. from endwall: not in 9.00 ft GCpi: 0.18 Wind Duration: 1.60	Pg: NA Ct: NA CAT: NA Pf: NA Ce: NA Lu: NA Cs: NA Snow Duration: NA **Code / Misc Criteria** Bldg Code: FBC 2017 RES TPI Std: 2014 Rep Factors Used: Yes FT/RT:20(0)/10(0) Plate Type(s): WAVE	PP Deflection in loc L/defl L/# VERT(LL): 0.001 I 999 240 VERT(TL): 0.003 I 999 180 HORZ(LL): -0.001 C - - HORZ(TL): 0.002 C - - Creep Factor: 2.0 Max TC CSI: 0.209 Max BC CSI: 0.101 Max Web CSI: 0.076 VIEW Ver: 17.02.00.1013.16	Loc R / U / Rw / Rh / RL / W F* 82 / 8 / 50 / - / 7 / 129 Wind reactions based on MWFRS F Min Brg Width Req = - Bearing A is a rigid surface. Members not listed have forces less than 375#

Lumber

Top chord 2x4 SP #2
Bot chord 2x4 SP #2
Webs 2x4 SP #3

Purlins

In lieu of structural panels use purlins to brace all flat TC @ 24" oc.

Wind

Wind loads based on MWFRS with additional C&C member design.

Right end vertical not exposed to wind pressure.

Additional Notes

See DWG VAL160101014 for valley details.

The overall height of this truss excluding overhang is 4-3-5.

WILLIAM H. KRICK
LICENSE
No. 70861
STATE OF FLORIDA
PROFESSIONAL ENGINEER

COA #0278

05/24/2018

****WARNING**** READ AND FOLLOW ALL NOTES ON THIS DRAWING!
****IMPORTANT**** FURNISH THIS DRAWING TO ALL CONTRACTORS INCLUDING THE INSTALLERS

Trusses require extreme care in fabricating, handling, shipping, installing and bracing. Refer to and follow the latest edition of BCSI (Building Component Safety Information, by TPI and SBCA) for safety practices prior to performing these functions. Installers shall provide temporary bracing per BCSI. Unless noted otherwise,top chord shall have properly attached structural sheathing and bottom chord shall have a properly attached rigid ceiling. Locations shown for permanent lateral restraint of webs shall have bracing installed per BCSI sections B3, B7, or B10, as applicable. Apply plates to each face of truss and position as shown above and on the Joint Details, unless noted otherwise. Refer to drawings 160A-Z for standard plate positions.

Alpine, a division of ITW Building Components Group Inc. shall not be responsible for any deviation from this drawing,any failure to build the truss in conformance with ANSI/TPI 1, or for handling, shipping, installation and bracing of trusses**A seal on this drawing or cover page listing this drawing, indicates acceptance of professional engineering responsibility solely for the design shown. The suitability and use of this drawing for any structure is the responsibility of the Building Designer per ANSI/TPI 1 Sec.2.**

For more information see this job's general notes page and these web sites: ALPINE: www.alpineitw.com; TPI: www.tpinst.org; SBCA: www.sbcindustry.com; ICC: www.iccsafe.org

ALPINE™ AN ITW COMPANY
6750 Forum Drive
Suite 305
Orlando FL, 32821

Job Number: 18-2262 FREEMAN **Truss Label:** V12	Ply: 1 Qty: 1	SEQN: 555871 / T94 VAL FROM: CDM	Cust: R215 JRef: 1Wb72150004 DrwNo: 144.18.0749.34807 KM / BAF 05/24/2018

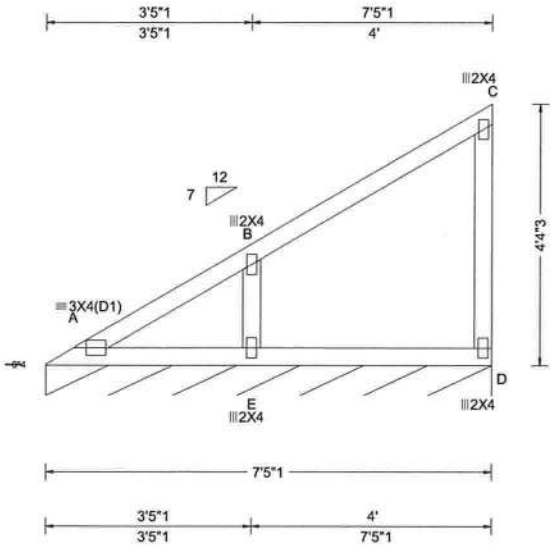

Loading Criteria (psf)	**Wind Criteria**	**Snow Criteria** (Pg,Pf in PSF)	**Defl/CSI Criteria**	**▲Maximum Reactions (lbs), or *=PLF**
TCLL: 20.00 TCDL: 10.00 BCLL: 0.00 BCDL: 10.00 Des Ld: 40.00 NCBCLL: 10.00 Soffit: 2.00 Load Duration: 1.25 Spacing: 24.0 "	Wind Std: ASCE 7-10 Speed: 130 mph Enclosure: Closed Risk Category: II EXP: C Mean Height: 15.02 ft TCDL: 5.0 psf BCDL: 5.0 psf MWFRS Parallel Dist: h to 2h C&C Dist a: 3.00 ft Loc. from endwall: not in 9.00 ft GCpi: 0.18 Wind Duration: 1.60	Pg: NA Ct: NA CAT: NA Pf: NA Ce: NA Lu: NA Cs: NA Snow Duration: NA **Code / Misc Criteria** Bldg Code: FBC 2017 RES TPI Std: 2014 Rep Factors Used: Yes FT/RT:20(0)/10(0) Plate Type(s): WAVE	PP Deflection in loc L/defl L/# VERT(LL): 0.002 E 999 240 VERT(TL): 0.007 E 999 180 HORZ(LL): -0.001 C - - HORZ(TL): 0.002 C - - Creep Factor: 2.0 Max TC CSI: 0.253 Max BC CSI: 0.160 Max Web CSI: 0.052 VIEW Ver: 17.02.00.1013.16	Loc R / U / Rw / Rh / RL / W D* 82 / 3 / 54 / - / 10 / 89.1 Wind reactions based on MWFRS D Min Brg Width Req = - Bearing A is a rigid surface. Members not listed have forces less than 375#

Lumber

Top chord 2x4 SP #2
Bot chord 2x4 SP #2
Webs 2x4 SP #3

Wind

Wind loads based on MWFRS with additional C&C member design.

Right end vertical not exposed to wind pressure.

Additional Notes

See DWG VAL160101014 for valley details.

The overall height of this truss excluding overhang is 4-4-3.

WILLIAM H. KRICK
LICENSE
No. 70861
STATE OF FLORIDA
PROFESSIONAL ENGINEER

COA #0278

05/24/2018

****WARNING**** READ AND FOLLOW ALL NOTES ON THIS DRAWING!
****IMPORTANT**** FURNISH THIS DRAWING TO ALL CONTRACTORS INCLUDING THE INSTALLERS

Trusses require extreme care in fabricating, handling, shipping, installing and bracing. Refer to and follow the latest edition of BCSI (Building Component Safety Information, by TPI and SBCA) for safety practices prior to performing these functions. Installers shall provide temporary bracing per BCSI. Unless noted otherwise,top chord shall have properly attached structural sheathing and bottom chord shall have a properly attached rigid ceiling. Locations shown for permanent lateral restraint of webs shall have bracing installed per BCSI sections B3, B7, or B10, as applicable. Apply plates to each face of truss and position as shown above and on the Joint Details, unless noted otherwise. Refer to drawings 160A-Z for standard plate positions.

Alpine, a division of ITW Building Components Group Inc. shall not be responsible for any deviation from this drawing,any failure to build the truss in conformance with ANSI/TPI 1, or for handling, shipping, installation and bracing of trusses**A seal on this drawing or cover page listing this drawing, indicates acceptance of professional engineering responsibility solely for the design shown. The suitability and use of this drawing for any structure is the responsibility of the Building Designer per ANSI/TPI 1 Sec.2.**

For more information see this job's general notes page and these web sites: ALPINE: www.alpineitw.com; TPI: www.tpinst.org; SBCA: www.sbcindustry.com; ICC: www.iccsafe.org

ALPINE™ AN ITW COMPANY
6750 Forum Drive
Suite 305
Orlando FL, 32821

Job Number: 18-2262 FREEMAN **Truss Label:** V13	Ply: 1 Qty: 1	SEQN: 555954 / T95 VAL FROM: CDM	Cust: R215 JRef: 1Wb72150004 DrwNo: 144.18.0749.35883 KM / BAF 05/24/2018

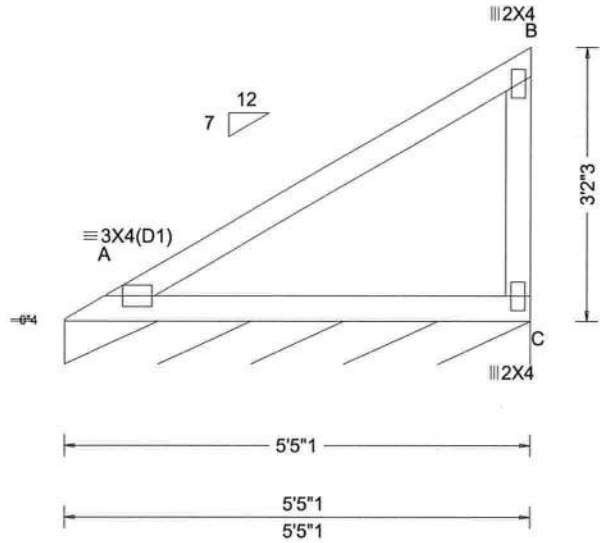

Loading Criteria (psf)	**Wind Criteria**	**Snow Criteria** (Pg,Pf in PSF)	**Defl/CSI Criteria**	**▲Maximum Reactions (lbs), or *=PLF**
TCLL: 20.00 TCDL: 10.00 BCLL: 0.00 BCDL: 10.00 Des Ld: 40.00 NCBCLL: 10.00 Soffit: 2.00 Load Duration: 1.25 Spacing: 24.0 "	Wind Std: ASCE 7-10 Speed: 130 mph Enclosure: Closed Risk Category: II EXP: C Mean Height: 15.60 ft TCDL: 5.0 psf BCDL: 5.0 psf MWFRS Parallel Dist: h to 2h C&C Dist a: 3.00 ft Loc. from endwall: not in 9.00 ft GCpi: 0.18 Wind Duration: 1.60	Pg: NA Ct: NA CAT: NA Pf: NA Ce: NA Lu: NA Cs: NA Snow Duration: NA **Code / Misc Criteria** Bldg Code: FBC 2017 RES TPI Std: 2014 Rep Factors Used: Yes FT/RT:20(0)/10(0) Plate Type(s): WAVE	PP Deflection in loc L/defl L/# VERT(LL): NA VERT(TL): NA HORZ(LL): 0.008 C - - HORZ(TL): 0.016 C - - Creep Factor: 2.0 Max TC CSI: 0.372 Max BC CSI: 0.320 Max Web CSI: 0.116 VIEW Ver: 17.02.00.1013.16	Loc R / U / Rw / Rh / RL / W C* 81 / 3 / 54 / - / 10 / 65.1 Wind reactions based on MWFRS C Min Brg Width Req = - Bearing A is a rigid surface. Members not listed have forces less than 375#

Lumber

Top chord 2x4 SP #2
Bot chord 2x4 SP #2
Webs 2x4 SP #3

Wind

Wind loads based on MWFRS with additional C&C member design.

Right end vertical not exposed to wind pressure.

Additional Notes

See DWG VAL160101014 for valley details.

The overall height of this truss excluding overhang is 3-2-3.

WILLIAM H. KRICK
LICENSE
No. 70861
STATE OF FLORIDA
PROFESSIONAL ENGINEER

COA #0278

05/24/2018

****WARNING**** READ AND FOLLOW ALL NOTES ON THIS DRAWING!
****IMPORTANT**** FURNISH THIS DRAWING TO ALL CONTRACTORS INCLUDING THE INSTALLERS

Trusses require extreme care in fabricating, handling, shipping, installing and bracing. Refer to and follow the latest edition of BCSI (Building Component Safety Information, by TPI and SBCA) for safety practices prior to performing these functions. Installers shall provide temporary bracing per BCSI. Unless noted otherwise,top chord shall have properly attached structural sheathing and bottom chord shall have a properly attached rigid ceiling. Locations shown for permanent lateral restraint of webs shall have bracing installed per BCSI sections B3, B7, or B10, as applicable. Apply plates to each face of truss and position as shown above and on the Joint Details, unless noted otherwise. Refer to drawings 160A-Z for standard plate positions.

Alpine, a division of ITW Building Components Group Inc. shall not be responsible for any deviation from this drawing,any failure to build the truss in conformance with ANSI/TPI 1, or for handling, shipping, installation and bracing of trusses**A seal on this drawing or cover page listing this drawing, indicates acceptance of professional engineering responsibility solely for the design shown. The suitability and use of this drawing for any structure is the responsibility of the Building Designer per ANSI/TPI 1 Sec.2.**

For more information see this job's general notes page and these web sites: ALPINE: www.alpineitw.com; TPI: www.tpinst.org; SBCA: www.sbcindustry.com; ICC: www.iccsafe.org

ALPINE™ AN ITW COMPANY
6750 Forum Drive
Suite 305
Orlando FL, 32821

Job Number: 18-2262 FREEMAN **Truss Label:** V14	Ply: 1 Qty: 1	SEQN: 556051 / T96 VAL FROM: CDM	Cust: R215 JRef: 1Wb72150004 DrwNo: 144.18.0749.37020 KM / BAF 05/24/2018

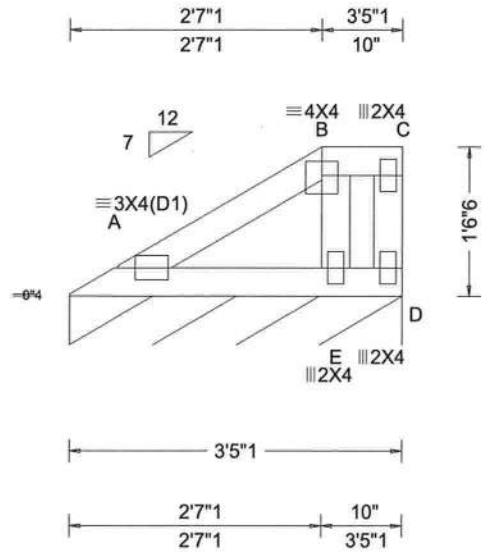

Loading Criteria (psf)
TCLL: 20.00
TCDL: 10.00
BCLL: 0.00
BCDL: 10.00
Des Ld: 40.00
NCBCLL: 10.00
Soffit: 2.00
Load Duration: 1.25
Spacing: 24.0 "

Wind Criteria
Wind Std: ASCE 7-10
Speed: 130 mph
Enclosure: Closed
Risk Category: II
EXP: C
Mean Height: 15.94 ft
TCDL: 5.0 psf
BCDL: 5.0 psf
MWFRS Parallel Dist: h to 2h
C&C Dist a: 3.00 ft
Loc. from endwall: not in 9.00 ft
GCpi: 0.18
Wind Duration: 1.60

Snow Criteria (Pg,Pf in PSF)
Pg: NA Ct: NA CAT: NA
Pf: NA Ce: NA
Lu: NA Cs: NA
Snow Duration: NA

Code / Misc Criteria
Bldg Code: FBC 2017 RES
TPI Std: 2014
Rep Factors Used: Yes
FT/RT:20(0)/10(0)
Plate Type(s):
WAVE

Defl/CSI Criteria

PP Deflection in	loc	L/defl	L/#
VERT(LL): 0.002	E	999	240
VERT(TL): 0.007	E	999	180
HORZ(LL): 0.001	E	-	-
HORZ(TL): 0.001	E	-	-

Creep Factor: 2.0
Max TC CSI: 0.069
Max BC CSI: 0.064
Max Web CSI: 0.019

VIEW Ver: 17.02.00.1013.16

▲Maximum Reactions (lbs), or *=PLF

Loc	R	/ U	/ Rw	/ Rh	/ RL	/ W
D*	80	/ 6	/ 48	/ -	/ 7	/ 41.1

Wind reactions based on MWFRS
D Min Brg Width Req = -
Bearing A is a rigid surface.

Members not listed have forces less than 375#

Lumber

Top chord 2x4 SP #2
Bot chord 2x4 SP #2
Webs 2x4 SP #3

Purlins

In lieu of structural panels use purlins to brace all flat TC @ 24" oc.

Wind

Wind loads based on MWFRS with additional C&C member design.

Additional Notes

See DWG VAL160101014 for valley details.

The overall height of this truss excluding overhang is 1-6-6.

WILLIAM H. KRICK
LICENSE
No. 70861
STATE OF FLORIDA
PROFESSIONAL ENGINEER

COA #0278

05/24/2018

****WARNING**** READ AND FOLLOW ALL NOTES ON THIS DRAWING!
****IMPORTANT**** FURNISH THIS DRAWING TO ALL CONTRACTORS INCLUDING THE INSTALLERS

Trusses require extreme care in fabricating, handling, shipping, installing and bracing. Refer to and follow the latest edition of BCSI (Building Component Safety Information, by TPI and SBCA) for safety practices prior to performing these functions. Installers shall provide temporary bracing per BCSI. Unless noted otherwise,top chord shall have properly attached structural sheathing and bottom chord shall have a properly attached rigid ceiling. Locations shown for permanent lateral restraint of webs shall have bracing installed per BCSI sections B3, B7, or B10, as applicable. Apply plates to each face of truss and position as shown above and on the Joint Details, unless noted otherwise. Refer to drawings 160A-Z for standard plate positions.

Alpine, a division of ITW Building Components Group Inc. shall not be responsible for any deviation from this drawing,any failure to build the truss in conformance with ANSI/TPI 1, or for handling, shipping, installation and bracing of trusses**A seal on this drawing or cover page listing this drawing, indicates acceptance of professional engineering responsibility solely for the design shown. The suitability and use of this drawing for any structure is the responsibility of the Building Designer per ANSI/TPI 1 Sec.2.**

For more information see this job's general notes page and these web sites: ALPINE: www.alpineitw.com; TPI: www.tpinst.org; SBCA: www.sbcindustry.com; ICC: www.iccsafe.org

ALPINE
AN ITW COMPANY
6750 Forum Drive
Suite 305
Orlando FL, 32821

Job Number: 18-2262 FREEMAN **Truss Label:** V15	Ply: 1 Qty: 1	SEQN: 556552 / T108 VAL FROM: CDM	Cust: R215 JRef: 1Wb72150004 DrwNo: 144.18.0749.38270 KM / BAF 05/24/2018

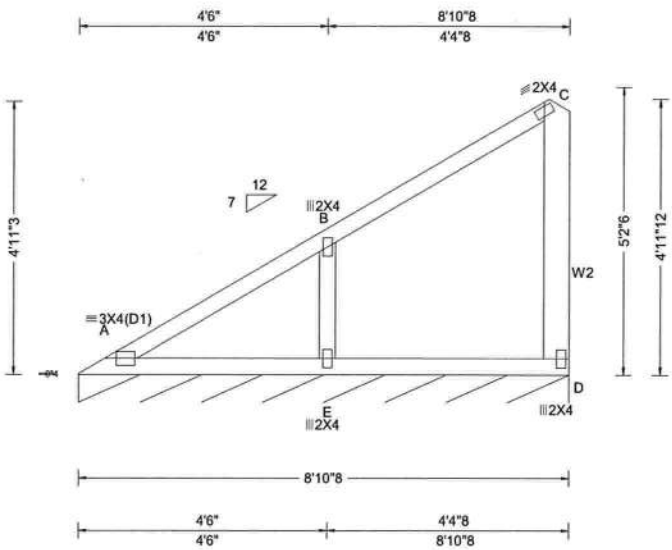

Loading Criteria (psf)
TCLL: 20.00
TCDL: 10.00
BCLL: 0.00
BCDL: 10.00
Des Ld: 40.00
NCBCLL: 10.00
Soffit: 2.00
Load Duration: 1.25
Spacing: 24.0 "

Wind Criteria
Wind Std: ASCE 7-10
Speed: 130 mph
Enclosure: Closed
Risk Category: II
EXP: C
Mean Height: 17.23 ft
TCDL: 5.0 psf
BCDL: 5.0 psf
MWFRS Parallel Dist: h to 2h
C&C Dist a: 3.00 ft
Loc. from endwall: not in 9.00 ft
GCpi: 0.18
Wind Duration: 1.60

Snow Criteria (Pg,Pf in PSF)
Pg: NA Ct: NA CAT: NA
Pf: NA Ce: NA
Lu: NA Cs: NA
Snow Duration: NA

Code / Misc Criteria
Bldg Code: FBC 2017 RES
TPI Std: 2014
Rep Factors Used: Yes
FT/RT:20(0)/10(0)
Plate Type(s):
WAVE

Defl/CSI Criteria

PP Deflection in	loc	L/defl	L/#
VERT(LL): 0.008	E	999	240
VERT(TL): 0.024	E	999	180
HORZ(LL): 0.002	E	-	-
HORZ(TL): 0.005	E	-	-

Creep Factor: 2.0
Max TC CSI: 0.322
Max BC CSI: 0.225
Max Web CSI: 0.065

VIEW Ver: 17.02.00.1013.16

▲ Maximum Reactions (lbs), or *=PLF

Loc	R	/ U	/ Rw	/ Rh	/ RL	/ W
D*	82	/ 4	/ 54	/ -	/ 10	/ 106

Wind reactions based on MWFRS
D Min Brg Width Req = -
Bearing A is a rigid surface.

Members not listed have forces less than 375#

Lumber

Top chord 2x4 SP #2
Bot chord 2x4 SP #2
Webs 2x4 SP #3 :W2 2x6 SP #2:

Wind

Wind loads based on MWFRS with additional C&C member design.

Right end vertical not exposed to wind pressure.

Additional Notes

See DWG VAL160101014 for valley details.

The overall height of this truss excluding overhang is 4-11-3.

COA #0 278
05/24/2018

****WARNING**** READ AND FOLLOW ALL NOTES ON THIS DRAWING!
****IMPORTANT**** FURNISH THIS DRAWING TO ALL CONTRACTORS INCLUDING THE INSTALLERS

Trusses require extreme care in fabricating, handling, shipping, installing and bracing. Refer to and follow the latest edition of BCSI (Building Component Safety Information, by TPI and SBCA) for safety practices prior to performing these functions. Installers shall provide temporary bracing per BCSI. Unless noted otherwise,top chord shall have properly attached structural sheathing and bottom chord shall have a properly attached rigid ceiling. Locations shown for permanent lateral restraint of webs shall have bracing installed per BCSI sections B3, B7, or B10, as applicable. Apply plates to each face of truss and position as shown above and on the Joint Details, unless noted otherwise. Refer to drawings 160A-Z for standard plate positions.

Alpine, a division of ITW Building Components Group Inc. shall not be responsible for any deviation from this drawing,any failure to build the truss in conformance with ANSI/TPI 1, or for handling, shipping, installation and bracing of trusses**A seal on this drawing or cover page listing this drawing, indicates acceptance of professional engineering responsibility solely for the design shown. The suitability and use of this drawing for any structure is the responsibility of the Building Designer per ANSI/TPI 1 Sec.2.**

For more information see this job's general notes page and these web sites: ALPINE: www.alpineitw.com; TPI: www.tpinst.org; SBCA: www.sbcindustry.com; ICC: www.iccsafe.org

ALPINE
AN ITW COMPANY
6750 Forum Drive
Suite 305
Orlando FL, 32821

Job Number: 18-2262 FREEMAN **Truss Label:** V16	Ply: 1 Qty: 1	SEQN: 556556 / T107 VAL FROM: CDM	Cust: R215 JRef: 1Wb72150004 DrwNo: 144.18.0749.39320 KM / BAF 05/24/2018

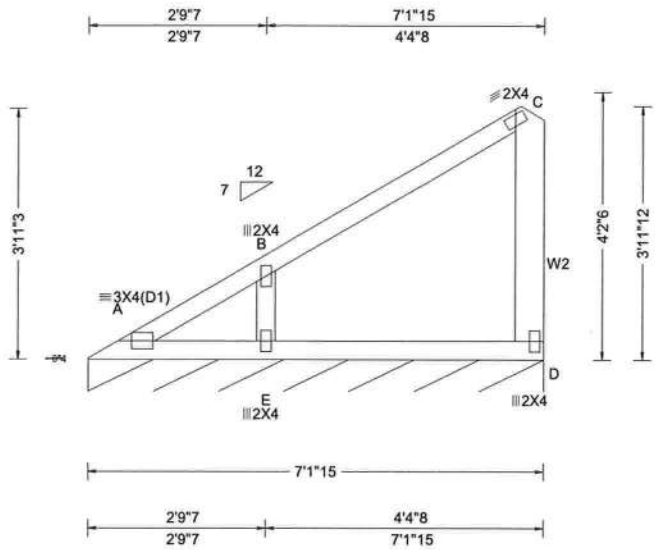

Loading Criteria (psf)	**Wind Criteria**	**Snow Criteria** (Pg,Pf in PSF)	**Defl/CSI Criteria**	**▲ Maximum Reactions (lbs), or *=PLF**
TCLL: 20.00 TCDL: 10.00 BCLL: 0.00 BCDL: 10.00 Des Ld: 40.00 NCBCLL: 10.00 Soffit: 2.00 Load Duration: 1.25 Spacing: 24.0 "	Wind Std: ASCE 7-10 Speed: 130 mph Enclosure: Closed Risk Category: II EXP: C Mean Height: 17.73 ft TCDL: 5.0 psf BCDL: 5.0 psf MWFRS Parallel Dist: h to 2h C&C Dist a: 3.00 ft Loc. from endwall: not in 9.00 ft GCpi: 0.18 Wind Duration: 1.60	Pg: NA Ct: NA CAT: NA Pf: NA Ce: NA Lu: NA Cs: NA Snow Duration: NA **Code / Misc Criteria** Bldg Code: FBC 2017 RES TPI Std: 2014 Rep Factors Used: Yes FT/RT:20(0)/10(0) Plate Type(s): WAVE	PP Deflection in loc L/defl L/# VERT(LL): 0.000 E 999 240 VERT(TL): 0.001 E 999 180 HORZ(LL): -0.001 C - - HORZ(TL): 0.001 C - - Creep Factor: 2.0 Max TC CSI: 0.215 Max BC CSI: 0.145 Max Web CSI: 0.052 VIEW Ver: 17.02.00.1013.16	Loc R / U / Rw / Rh / RL / W D* 82 / 4 / 53 / - / 10 / 85.9 Wind reactions based on MWFRS D Min Brg Width Req = - Bearing A is a rigid surface. Members not listed have forces less than 375#

Lumber

Top chord 2x4 SP #2
Bot chord 2x4 SP #2
Webs 2x4 SP #3 :W2 2x6 SP #2:

Wind

Wind loads based on MWFRS with additional C&C member design.

Right end vertical not exposed to wind pressure.

Additional Notes

See DWG VAL160101014 for valley details.

The overall height of this truss excluding overhang is 3-11-3.

WILLIAM H. KRICK
LICENSE
No. 70861
STATE OF FLORIDA
PROFESSIONAL ENGINEER

COA #0 278
05/24/2018

****WARNING**** READ AND FOLLOW ALL NOTES ON THIS DRAWING!
****IMPORTANT**** FURNISH THIS DRAWING TO ALL CONTRACTORS INCLUDING THE INSTALLERS

Trusses require extreme care in fabricating, handling, shipping, installing and bracing. Refer to and follow the latest edition of BCSI (Building Component Safety Information, by TPI and SBCA) for safety practices prior to performing these functions. Installers shall provide temporary bracing per BCSI. Unless noted otherwise,top chord shall have properly attached structural sheathing and bottom chord shall have a properly attached rigid ceiling. Locations shown for permanent lateral restraint of webs shall have bracing installed per BCSI sections B3, B7, or B10, as applicable. Apply plates to each face of truss and position as shown above and on the Joint Details, unless noted otherwise. Refer to drawings 160A-Z for standard plate positions.

Alpine, a division of ITW Building Components Group Inc. shall not be responsible for any deviation from this drawing,any failure to build the truss in conformance with ANSI/TPI 1, or for handling, shipping, installation and bracing of trusses**A seal on this drawing or cover page listing this drawing, indicates acceptance of professional engineering responsibility solely for the design shown. The suitability and use of this drawing for any structure is the responsibility of the Building Designer per ANSI/TPI 1 Sec.2.**

For more information see this job's general notes page and these web sites: ALPINE: www.alpineitw.com; TPI: www.tpinst.org; SBCA: www.sbcindustry.com; ICC: www.iccsafe.org

ALPINE AN ITW COMPANY
6750 Forum Drive
Suite 305
Orlando FL, 32821

Job Number: 18-2262 FREEMAN **Truss Label:** V17	Ply: 1 Qty: 1	SEQN: 556558 / T106 VAL FROM: CDM	Cust: R215 JRef: 1Wb72150004 DrwNo: 144.18.0749.40460 KM / BAF 05/24/2018

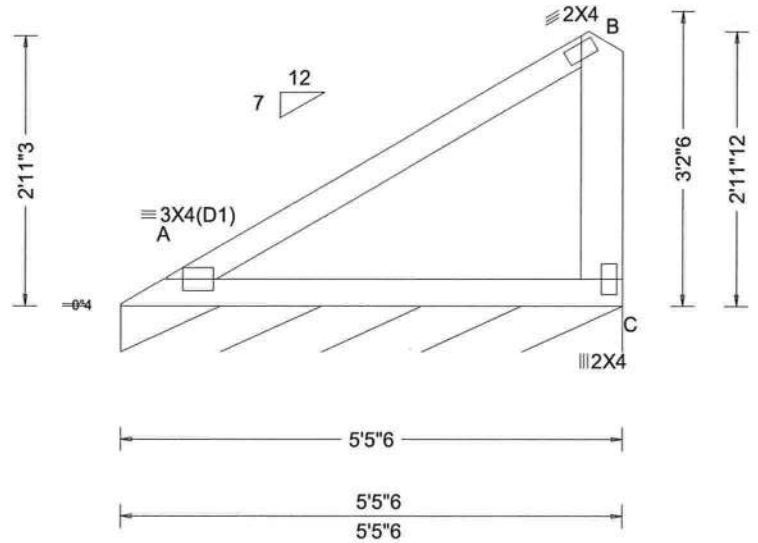

Loading Criteria (psf)	**Wind Criteria**	**Snow Criteria** (Pg,Pf in PSF)	**Defl/CSI Criteria**	**▲Maximum Reactions (lbs), or *=PLF**
TCLL: 20.00 TCDL: 10.00 BCLL: 0.00 BCDL: 10.00 Des Ld: 40.00 NCBCLL: 10.00 Soffit: 2.00 Load Duration: 1.25 Spacing: 24.0 "	Wind Std: ASCE 7-10 Speed: 130 mph Enclosure: Closed Risk Category: II EXP: C Mean Height: 18.23 ft TCDL: 5.0 psf BCDL: 5.0 psf MWFRS Parallel Dist: > 2h C&C Dist a: 3.00 ft Loc. from endwall: not in 9.00 ft GCpi: 0.18 Wind Duration: 1.60	Pg: NA Ct: NA CAT: NA Pf: NA Ce: NA Lu: NA Cs: NA Snow Duration: NA **Code / Misc Criteria** Bldg Code: FBC 2017 RES TPI Std: 2014 Rep Factors Used: Yes FT/RT:20(0)/10(0) Plate Type(s): WAVE	PP Deflection in loc L/defl L/# VERT(LL): NA VERT(TL): NA HORZ(LL): 0.007 C - - HORZ(TL): 0.014 C - - Creep Factor: 2.0 Max TC CSI: 0.351 Max BC CSI: 0.308 Max Web CSI: 0.055 VIEW Ver: 17.02.00.1013.16	Loc R / U / Rw / Rh / RL / W C* 81 / 4 / 52 / - / 9 / 65.4 Wind reactions based on MWFRS C Min Brg Width Req = - Bearing A is a rigid surface. Members not listed have forces less than 375#

Lumber

Top chord 2x4 SP #2
Bot chord 2x4 SP #2
Webs 2x6 SP #2

Wind

Wind loads based on MWFRS with additional C&C member design.

Right end vertical not exposed to wind pressure.

Additional Notes

See DWG VAL160101014 for valley details.

The overall height of this truss excluding overhang is 2-11-3.

COA #0 278

05/24/2018

****WARNING**** READ AND FOLLOW ALL NOTES ON THIS DRAWING!
****IMPORTANT**** FURNISH THIS DRAWING TO ALL CONTRACTORS INCLUDING THE INSTALLERS

Trusses require extreme care in fabricating, handling, shipping, installing and bracing. Refer to and follow the latest edition of BCSI (Building Component Safety Information, by TPI and SBCA) for safety practices prior to performing these functions. Installers shall provide temporary bracing per BCSI. Unless noted otherwise,top chord shall have properly attached structural sheathing and bottom chord shall have a properly attached rigid ceiling. Locations shown for permanent lateral restraint of webs shall have bracing installed per BCSI sections B3, B7, or B10, as applicable. Apply plates to each face of truss and position as shown above and on the Joint Details, unless noted otherwise. Refer to drawings 160A-Z for standard plate positions.

Alpine, a division of ITW Building Components Group Inc. shall not be responsible for any deviation from this drawing,any failure to build the truss in conformance with ANSI/TPI 1, or for handling, shipping, installation and bracing of trusses**A seal on this drawing or cover page listing this drawing, indicates acceptance of professional engineering responsibility solely for the design shown. The suitability and use of this drawing for any structure is the responsibility of the Building Designer per ANSI/TPI 1 Sec.2.**

For more information see this job's general notes page and these web sites: ALPINE: www.alpineitw.com; TPI: www.tpinst.org; SBCA: www.sbcindustry.com; ICC: www.iccsafe.org

ALPINE™ AN ITW COMPANY
6750 Forum Drive
Suite 305
Orlando FL, 32821

Job Number: 18-2262 FREEMAN **Truss Label:** V18	Ply: 1 Qty: 1	SEQN: 556560 / T105 VAL FROM: CDM	Cust: R215 JRef: 1Wb72150004 DrwNo: 144.18.0749.42520 KM / BAF 05/24/2018

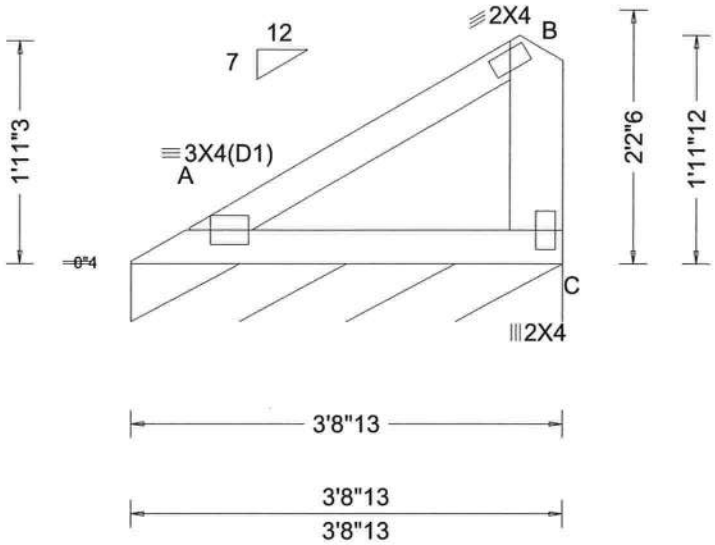

Loading Criteria (psf)	**Wind Criteria**	**Snow Criteria** (Pg,Pf in PSF)	**Defl/CSI Criteria**	**▲ Maximum Reactions (lbs), or *=PLF**
TCLL: 20.00 TCDL: 10.00 BCLL: 0.00 BCDL: 10.00 Des Ld: 40.00 NCBCLL: 10.00 Soffit: 2.00 Load Duration: 1.25 Spacing: 24.0 "	Wind Std: ASCE 7-10 Speed: 130 mph Enclosure: Closed Risk Category: II EXP: C Mean Height: 18.73 ft TCDL: 5.0 psf BCDL: 5.0 psf MWFRS Parallel Dist: > 2h C&C Dist a: 3.00 ft Loc. from endwall: not in 9.00 ft GCpi: 0.18 Wind Duration: 1.60	Pg: NA Ct: NA CAT: NA Pf: NA Ce: NA Lu: NA Cs: NA Snow Duration: NA **Code / Misc Criteria** Bldg Code: FBC 2017 RES TPI Std: 2014 Rep Factors Used: Yes FT/RT:20(0)/10(0) Plate Type(s): WAVE	PP Deflection in loc L/defl L/# VERT(LL): NA VERT(TL): NA HORZ(LL): 0.002 C - - HORZ(TL): 0.004 C - - Creep Factor: 2.0 Max TC CSI: 0.152 Max BC CSI: 0.124 Max Web CSI: 0.018 VIEW Ver: 17.02.00.1013.16	Loc R / U / Rw / Rh / RL / W C* 80 / 3 / 49 / - / 9 / 44.8 Wind reactions based on MWFRS C Min Brg Width Req = - Bearing A is a rigid surface. Members not listed have forces less than 375#

Lumber

Top chord 2x4 SP #2
Bot chord 2x4 SP #2
Webs 2x6 SP #2

Wind

Wind loads based on MWFRS with additional C&C member design.

Additional Notes

See DWG VAL160101014 for valley details.

The overall height of this truss excluding overhang is 1-11-3.

WILLIAM H. KRICK
LICENSE
No. 70861
STATE OF FLORIDA
PROFESSIONAL ENGINEER

COA #0 278

05/24/2018

****WARNING**** READ AND FOLLOW ALL NOTES ON THIS DRAWING!
****IMPORTANT**** FURNISH THIS DRAWING TO ALL CONTRACTORS INCLUDING THE INSTALLERS

Trusses require extreme care in fabricating, handling, shipping, installing and bracing. Refer to and follow the latest edition of BCSI (Building Component Safety Information, by TPI and SBCA) for safety practices prior to performing these functions. Installers shall provide temporary bracing per BCSI. Unless noted otherwise,top chord shall have properly attached structural sheathing and bottom chord shall have a properly attached rigid ceiling. Locations shown for permanent lateral restraint of webs shall have bracing installed per BCSI sections B3, B7, or B10, as applicable. Apply plates to each face of truss and position as shown above and on the Joint Details, unless noted otherwise. Refer to drawings 160A-Z for standard plate positions.

Alpine, a division of ITW Building Components Group Inc. shall not be responsible for any deviation from this drawing,any failure to build the truss in conformance with ANSI/TPI 1, or for handling, shipping, installation and bracing of trusses**A seal on this drawing or cover page listing this drawing, indicates acceptance of professional engineering responsibility solely for the design shown. The suitability and use of this drawing for any structure is the responsibility of the Building Designer per ANSI/TPI 1 Sec.2.**

For more information see this job's general notes page and these web sites: ALPINE: www.alpineitw.com; TPI: www.tpinst.org; SBCA: www.sbcindustry.com; ICC: www.iccsafe.org

ALPINE™ AN ITW COMPANY
6750 Forum Drive
Suite 305
Orlando FL, 32821

CLR Reinforcing Member Substitution

This detail is to be used when a Continuous Lateral Restraint (CLR) is specified on a truss design but an alternative web reinforcement method is desired.

Notes:

This detail is only applicable for changing the specified CLR shown on single ply sealed designs to T-reinforcement or L-reinforcement or scab reinforcement.

Alternative reinforcement specified in chart below may be conservative. For minimum alternative reinforcement, re-run design with appropriate reinforcement type.

Web Member Size	Specified CLR Restraint	Alternative Reinforcement T- or L- Reinf.	Alternative Reinforcement Scab Reinf.
2x3 or 2x4	1 row	2x4	1-2x4
2x3 or 2x4	2 rows	2x6	2-2x4
2x6	1 row	2x4	1-2x6
2x6	2 rows	2x6	2-2x4(*)
2x8	1 row	2x6	1-2x8
2x8	2 rows	2x6	2-2x6(*)

T-reinforcement, L-reinforcement, or scab reinforcement to be same species and grade or better than web member unless specified otherwise on Engineer's sealed design.

(*) Center scab on wide face of web. Apply (1) scab to each face of web.

T-Reinforcement or L-Reinforcement:

Apply to either side of web narrow face. Attach with 10d (0.128"x3.0",min) nails at 6" o.c. Reinforcing member is a minimum 80% of web member length.

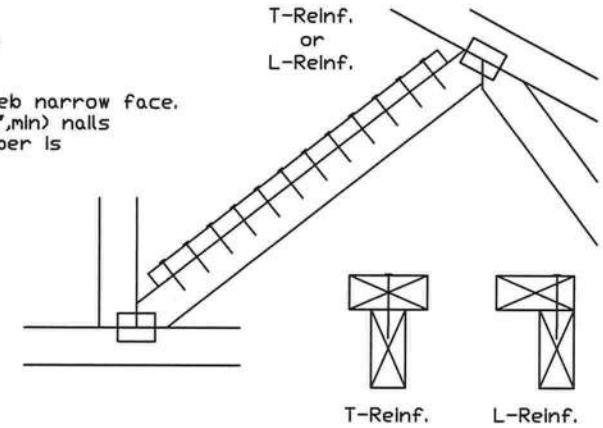

Scab Reinforcement:

Apply scab(s) to wide face of web. No more than (1) scab per face. Attach with 10d (0.128"x3.0",min) nails at 6" o.c. Reinforcing member is a minimum 80% of web member length.

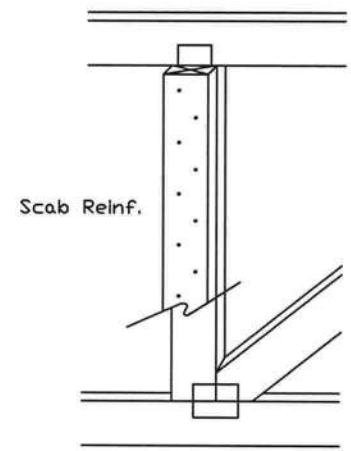

WILLIAM H. KRICK
LICENSE
No. 70861
STATE OF FLORIDA
PROFESSIONAL ENGINEER
COA #0228
05/24/2018

ALPINE
AN ITW COMPANY
13723 Riverport Drive
Suite 200
Maryland Heights, MO 63043

WARNING READ AND FOLLOW ALL NOTES ON THIS DRAWING
IMPORTANT FURNISH THIS DRAWING TO ALL CONTRACTORS INCLUDING THE INSTALLER.

Trusses require extreme care in fabricating, handling, shipping, installing and bracing. Refer to and follow the latest edition of BCSI (Building Component Safety Information, by TPI and SBCA) for safety practices prior to performing these functions. Installers shall provide temporary bracing per BCSI. Unless noted otherwise, top chord shall have properly attached structural sheathing and bottom chord shall have a properly attached rigid ceiling. Locations shown for permanent lateral restraint of webs shall have bracing installed per BCSI sections B3, B7 or B10, as applicable. Apply plates to each face of truss and position as shown above and on the Joint Details, unless noted otherwise. Refer to drawings 160A-Z for standard plate positions.

Alpine, a division of ITW Building Components Group Inc. shall not be responsible for any deviation from this drawing, any failure to build the truss in conformance with ANSI/TPI 1, or for handling, shipping, installation & bracing of trusses.

A seal on this drawing or cover page listing this drawing, indicates acceptance of professional engineering responsibility solely for the design shown. The suitability and use of this drawing for any structure is the responsibility of the Building Designer per ANSI/TPI 1 Sec.2.

For more information see this job's general notes page and these web sites:
ALPINE: www.alpineitw.com; TPI: www.tpinst.org; SBCA: www.sbcindustry.org; ICC: www.iccsafe.org

TC LL	PSF	REF CLR Subst.
TC DL	PSF	DATE 10/01/14
BC DL	PSF	DRWG BRCLBSUB1014
BC LL	PSF	
TOT. LD.	PSF	
DUR. FAC.		
SPACING		

Gable Stud Reinforcement Detail

ASCE 7-10: 140 mph Wind Speed, 15' Mean Height, Enclosed, Exposure C, Kzt = 1.00

Or: 120 mph Wind Speed, 15' Mean Height, Partially Enclosed, Exposure C, Kzt = 1.00
Or: 120 mph Wind Speed, 15' Mean Height, Enclosed, Exposure D, Kzt = 1.00
Or: 100 mph Wind Speed, 15' Mean Height, Partially Enclosed, Exposure D, Kzt = 1.00

Max Gable Vertical Length	2x4 Gable Vertical Spacing	Species	Brace Grade	No Braces	(1) 1x4 'L' Brace *		(1) 2x4 'L' Brace *		(2) 2x4 'L' Brace **		(1) 2x6 'L' Brace *		(2) 2x6 'L' Brace **	
					Group A	Group B	Group A	Group B	Group A	Group B	Group A	Group B	Group A	Group B
	24" o.c.	SPF HF	#1 / #2	4' 3"	7' 3"	7' 7"	8' 7"	8' 11"	10' 3"	10' 8"	13' 6"	14' 0"	14' 0"	14' 0"
			#3	4' 1"	6' 7"	7' 1"	8' 6"	8' 10"	10' 1"	10' 6"	13' 4"	13' 10"	14' 0"	14' 0"
			Stud	4' 1"	6' 7"	7' 0"	8' 6"	8' 10"	10' 1"	10' 6"	13' 4"	13' 10"	14' 0"	14' 0"
			Standard	4' 1"	5' 8"	6' 0"	7' 7"	8' 1"	10' 1"	10' 6"	11' 10"	12' 8"	14' 0"	14' 0"
		SP DFL	#1	4' 6"	7' 4"	7' 8"	8' 8"	9' 0"	10' 4"	10' 9"	13' 8"	14' 0"	14' 0"	14' 0"
			#2	4' 3"	7' 3"	7' 7"	8' 7"	8' 11"	10' 3"	10' 8"	13' 6"	14' 0"	14' 0"	14' 0"
			#3	4' 2"	6' 0"	6' 4"	7' 11"	8' 6"	10' 2"	10' 7"	12' 5"	13' 4"	14' 0"	14' 0"
			Stud	4' 2"	6' 0"	6' 4"	7' 11"	8' 6"	10' 2"	10' 7"	12' 5"	13' 4"	14' 0"	14' 0"
			Standard	4' 0"	5' 3"	5' 7"	7' 0"	7' 6"	9' 6"	10' 2"	11' 0"	11' 10"	14' 0"	14' 0"
	16" o.c.	SPF HF	#1 / #2	4' 11"	8' 4"	8' 8"	9' 10"	10' 3"	11' 8"	12' 2"	14' 0"	14' 0"	14' 0"	14' 0"
			#3	4' 8"	8' 1"	8' 8"	9' 8"	10' 1"	11' 7"	12' 1"	14' 0"	14' 0"	14' 0"	14' 0"
			Stud	4' 8"	8' 1"	8' 6"	9' 8"	10' 1"	11' 7"	12' 1"	14' 0"	14' 0"	14' 0"	14' 0"
			Standard	4' 8"	6' 11"	7' 5"	9' 3"	9' 11"	11' 7"	12' 1"	14' 0"	14' 0"	14' 0"	14' 0"
		SP DFL	#1	5' 1"	8' 5"	8' 9"	9' 11"	10' 4"	11' 10"	12' 4"	14' 0"	14' 0"	14' 0"	14' 0"
			#2	4' 11"	8' 4"	8' 8"	9' 10"	10' 3"	11' 8"	12' 2"	14' 0"	14' 0"	14' 0"	14' 0"
			#3	4' 9"	7' 4"	7' 9"	9' 9"	10' 2"	11' 8"	12' 1"	14' 0"	14' 0"	14' 0"	14' 0"
			Stud	4' 9"	7' 4"	7' 9"	9' 9"	10' 2"	11' 8"	12' 1"	14' 0"	14' 0"	14' 0"	14' 0"
			Standard	4' 8"	6' 5"	6' 10"	8' 7"	9' 2"	11' 7"	12' 1"	13' 6"	14' 0"	14' 0"	14' 0"
	12" o.c.	SPF HF	#1 / #2	5' 5"	9' 2"	9' 6"	10' 10"	11' 3"	11' 8"	13' 5"	14' 0"	14' 0"	14' 0"	14' 0"
			#3	5' 1"	9' 0"	9' 4"	10' 8"	11' 1"	12' 9"	13' 3"	14' 0"	14' 0"	14' 0"	14' 0"
			Stud	5' 1"	9' 0"	9' 4"	10' 8"	11' 1"	12' 9"	13' 3"	14' 0"	14' 0"	14' 0"	14' 0"
			Standard	5' 1"	8' 0"	8' 6"	10' 8"	11' 1"	12' 9"	13' 3"	14' 0"	14' 0"	14' 0"	14' 0"
		SP DFL	#1	5' 8"	9' 3"	9' 8"	10' 11"	11' 4"	13' 0"	13' 6"	14' 0"	14' 0"	14' 0"	14' 0"
			#2	5' 5"	9' 2"	9' 6"	10' 10"	11' 3"	12' 11"	13' 5"	14' 0"	14' 0"	14' 0"	14' 0"
			#3	5' 3"	8' 5"	9' 0"	10' 9"	11' 2"	12' 10"	13' 4"	14' 0"	14' 0"	14' 0"	14' 0"
			Stud	5' 3"	8' 5"	9' 0"	10' 9"	11' 2"	12' 10"	13' 4"	14' 0"	14' 0"	14' 0"	14' 0"
			Standard	5' 1"	7' 5"	7' 11"	9' 11"	10' 7"	12' 9"	13' 3"	14' 0"	14' 0"	14' 0"	14' 0"

Bracing Group Species and Grades:

Group A:

Spruce-Pine-Fir

#1 / #2	Standard
#3	Stud

Hem-Fir

#2	Stud
#3	Standard

Douglas Fir-Larch

#3
Stud
Standard

Southern Pine***

#3
Stud
Standard

Group B:

Hem-Fir

#1 & Btr
#1

Douglas Fir-Larch

#1
#2

Southern Pine***

#1
#2

1x4 Braces shall be SRB (Stress-Rated Board).

***For 1x4 So. Pine use only Industrial 55 or Industrial 45 Stress-Rated Boards. Group B values may be used with these grades.

Gable Truss Detail Notes:

Wind Load deflection criterion is L/240.

Provide uplift connections for 55 plf over continuous bearing (5 psf TC Dead Load).

Gable end supports load from 4' 0" outlookers with 2' 0" overhang, or 12" plywood overhang.

Attach 'L' braces with 10d (0.128"x3.0" min) nails.

* For (1) 'L' brace: space nails at 2" o.c. in 18" end zones and 4" o.c. between zones.

** For (2) 'L' braces: space nails at 3" o.c. in 18" end zones and 6" o.c. between zones.

'L' bracing must be a minimum of 80% of web member length.

Gable Vertical Plate Sizes

Vertical Length	No Splice
Less than 4' 0"	1X4 or 2X3
Greater than 4' 0"	3X4

+ Refer to common truss design for peak, splice, and heel plates.

Refer to the Building Designer for conditions not addressed by this detail.

Diagonal brace option: vertical length may be doubled when diagonal brace is used. Connect diagonal brace for 450# at each end. Max web total length is 14'.

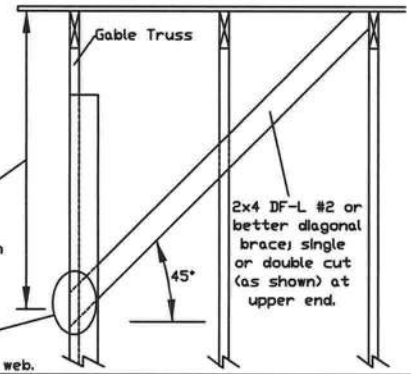

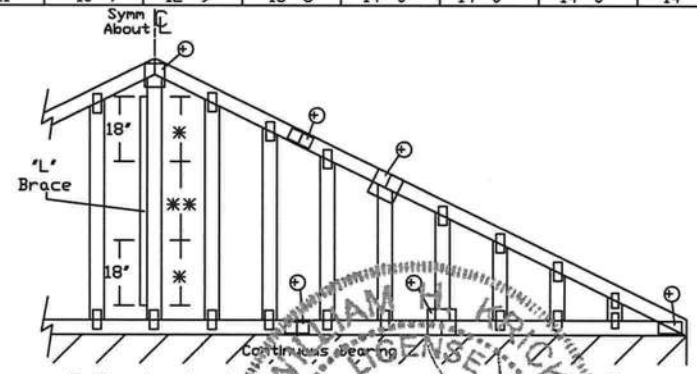

Refer to chart above for max gable vertical length.

ALPINE
AN ITW COMPANY
13723 Riverport Drive
Suite 200
Maryland Heights, MO 63043

WARNING READ AND FOLLOW ALL NOTES ON THIS DRAWING!
IMPORTANT FURNISH THIS DRAWING TO ALL CONTRACTORS INCLUDING THE INSTALLER.

Trusses require extreme care in fabricating, handling, shipping, installing and bracing. Refer to and follow the latest edition of BCSI (Building Component Safety Information, by TPI and SBCA) for safety practices prior to performing these functions. Installers shall provide temporary bracing per BCSI. Unless noted otherwise, top chord shall have properly attached structural sheathing and bottom chord shall have a properly attached rigid ceiling. Locations shown for permanent lateral restraint of webs shall have bracing installed per BCSI sections B3, B7 or B10, as applicable. Apply plates to each face of truss and position as shown above and on the Joint Details, unless noted otherwise. Refer to drawings 160A-Z for standard plate positions.

Alpine, a division of ITW Building Components Group Inc. shall not be responsible for any deviation from this drawing, any failure to build the truss in conformance with ANSI/TPI 1, or for handling, shipping, installation & bracing of trusses.

A seal on this drawing or cover page listing this drawing, indicates acceptance of professional engineering responsibility solely for the design shown. The suitability and use of this drawing for any structure is the responsibility of the Building Designer per ANSI/TPI 1 Sec.2.

For more information see this job's general notes page and these web sites:
ALPINE: www.alpineitw.com; TPI: www.tpinst.org; SBCA: www.sbcindustry.org; ICC: www.iccsafe.org

No. 70861
STATE OF FLORIDA
PROFESSIONAL ENGINEER
COA #0278
05/24/2018

MAX. TOT. LD. 60 PSF

MAX. SPACING 24.0"

REF	ASCE7-10-GAB14015
DATE	10/01/14
DRWG	A14015ENC101014

Gable Detail

For Let-in Verticals

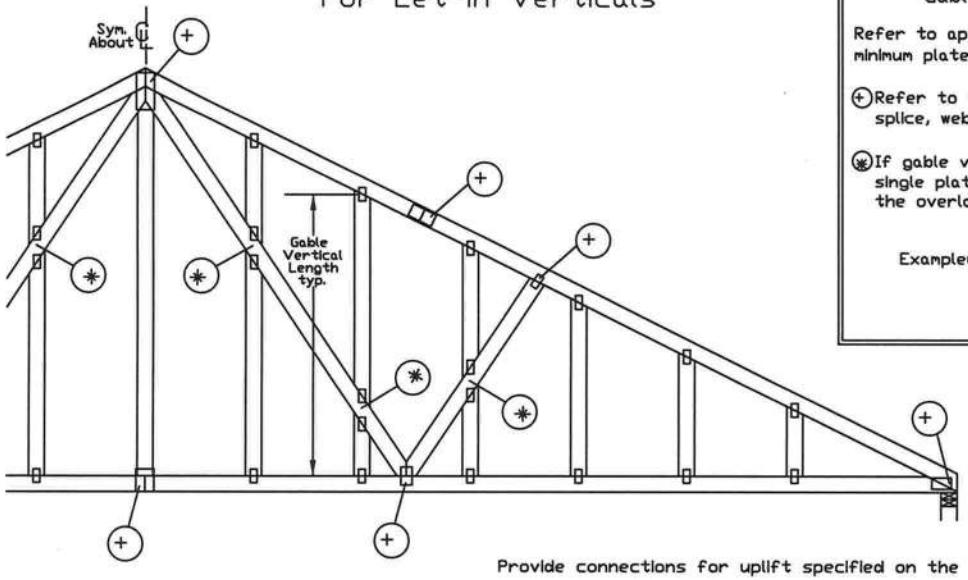

Gable Truss Plate Sizes

Refer to appropriate Alpine gable detail for minimum plate sizes for vertical studs.

(+) Refer to Engineered truss design for peak, splice, web, and heel plates.

(✱) If gable vertical plates overlap, use a single plate that covers the total area of the overlapped plates to span the web.

Example:

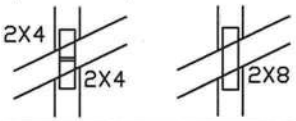

'T' Reinforcement Attachment Detail

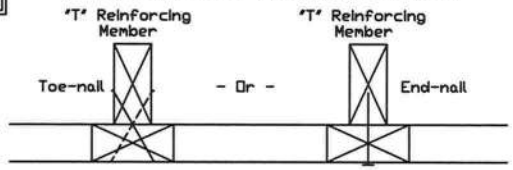

Provide connections for uplift specified on the engineered truss design.

Attach each 'T' reinforcing member with

End Driven Nails:
10d Common (0.148"x 3.",min) Nails at 4" o.c. plus (4) nails in the top and bottom chords.

Toenailed Nails:
10d Common (0.148"x3",min) Toenails at 4" o.c. plus (4) toenails in the top and bottom chords.

This detail to be used with the appropriate Alpine gable detail for ASCE wind load.

ASCE 7-05 Gable Detail Drawings
A13015051014, A12015051014, A11015051014, A10015051014, A14015051014, A13030051014, A12030051014, A11030051014, A10030051014, A14030051014

ASCE 7-10 & ASCE 7-16 Gable Detail Drawings
A11515ENC100118, A12015ENC100118, A14015ENC100118, A16015ENC100118, A18015ENC100118, A20015ENC100118, A20015END100118, A20015PED100118, A11530ENC100118, A12030ENC100118, A14030ENC100118, A16030ENC100118, A18030ENC100118, A20030ENC100118, A20030END100118, A20030PED100118, S11515ENC100118, S12015ENC100118, S14015ENC100118, S16015ENC100118, S18015ENC100118, S20015ENC100118, S20015END100118, S20015PED100118, S11530ENC100118, S12030ENC100118, S14030ENC100118, S16030ENC100118, S18030ENC100118, S20030ENC100118, S20030END100118, S20030PED100118

See appropriate Alpine gable detail for maximum unreinforced gable vertical length.

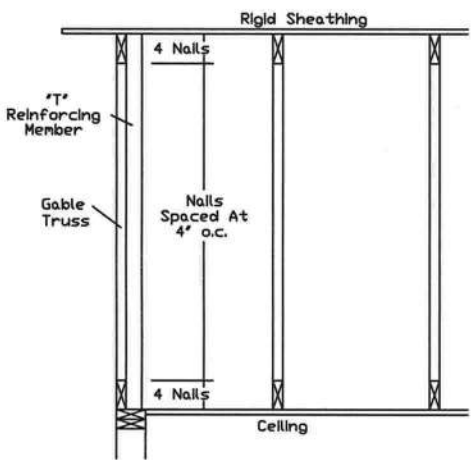

To convert from 'L' to 'T' reinforcing members, multiply 'T' increase by length (based on appropriate Alpine gable detail).

Maximum allowable 'T' reinforced gable vertical length is 14' from top to bottom chord.

'T' reinforcing member material must match size, specie, and grade of the 'L' reinforcing member.

Web Length Increase w/ 'T' Brace

'T' Reinf. Mbr. Size	'T' Increase
2x4	30 %
2x6	20 %

Example:
ASCE 7-10 Wind Speed = 120 mph
Mean Roof Height = 30 ft, Kzt = 1.00
Gable Vertical = 24"o.c. SP #3
'T' Reinforcing Member Size = 2x4
'T' Brace Increase (From Above) = 30% = 1.30
(1) 2x4 'L' Brace Length = 8' 7"
Maximum 'T' Reinforced Gable Vertical Length
1.30 x 8' 7" = 11' 2"

ALPINE™ AN ITW COMPANY
13723 Riverport Drive
Suite 200
Maryland Heights, MO 63043

WARNING! READ AND FOLLOW ALL NOTES ON THIS DRAWING!
IMPORTANT! FURNISH THIS DRAWING TO ALL CONTRACTORS INCLUDING THE INSTALLERS.

Trusses require extreme care in fabricating, handling, shipping, installing and bracing. Refer to and follow the latest edition of BCSI (Building Component Safety Information, by TPI and SBCA) for safety practices prior to performing these functions. Installers shall provide temporary bracing per BCSI. Unless noted otherwise, top chord shall have properly attached structural sheathing and bottom chord shall have a properly attached rigid ceiling. Locations shown for permanent lateral restraint of web shall have bracing installed per BCSI sections B3, B7 or B10, as applicable. Apply plates to each face of truss and position as shown above and on the Joint Details, unless noted otherwise. Refer to drawings 160A-Z for standard plate positions.

Alpine, a division of ITW Building Components Group Inc. shall not be responsible for any deviation from this drawing, any failure to build the truss in conformance with ANSI/TPI 1, or for handling, shipping, installation & bracing of trusses.

A seal on this drawing or cover page listing this drawing, indicates acceptance of professional engineering responsibility solely for the design shown. The suitability and use of this drawing for any structure is the responsibility of the Building Designer per ANSI/TPI 1 Sec.2.

For more information see this job's general notes page and these web sites:
ALPINE: www.alpineitw.com; TPI: www.tpinst.org; SBCA: www.sbcindustry.org; ICC: www.iccsafe.org

WILLIAM E. MORRIS LICENSED PROFESSIONAL ENGINEER No. 70861 STATE OF FLORIDA

COA #0524 2/1/2018

MAX. TOT. LD.	60 PSF
DUR. FAC.	ANY
MAX. SPACING	24.0"

REF	LET-IN VERT
DATE	01/02/2018
DRWG	GBLLETIN0118

Piggyback Detail - ASCE 7-10: 160 mph, 30' Mean Height, Enclosed, Exposure C, Kzt=1.00

160 mph Wind, 30.00 ft Mean Hgt, ASCE 7-10, Enclosed Bldg. located anywhere in roof, Exp C, Wind DL= 5.0 psf (min), Kzt=1.0.
Or 140 mph wind, 30.00 ft Mean Hgt, ASCE 7-10, Enclosed Bldg. located anywhere in roof, Exp D, wind DL= 5.0 psf (min), Kzt=1.0.

Note: Top chords of trusses supporting piggyback cap trusses must be adequately braced by sheathing or purlins. The building Engineer of Record shall provide diagonal bracing or any other suitable anchorage to permanently restrain purlins, and lateral bracing for out of plane loads over gable ends.

Maximum truss spacing is 24" o.c. detail is not applicable if cap supports additional loads such as cupola, steeple, chimney or drag strut loads.

** Refer to Engineer's sealed truss design drawing for piggyback and base truss specifications.

Detail A : Purlin Spacing = 24" o.c. or less

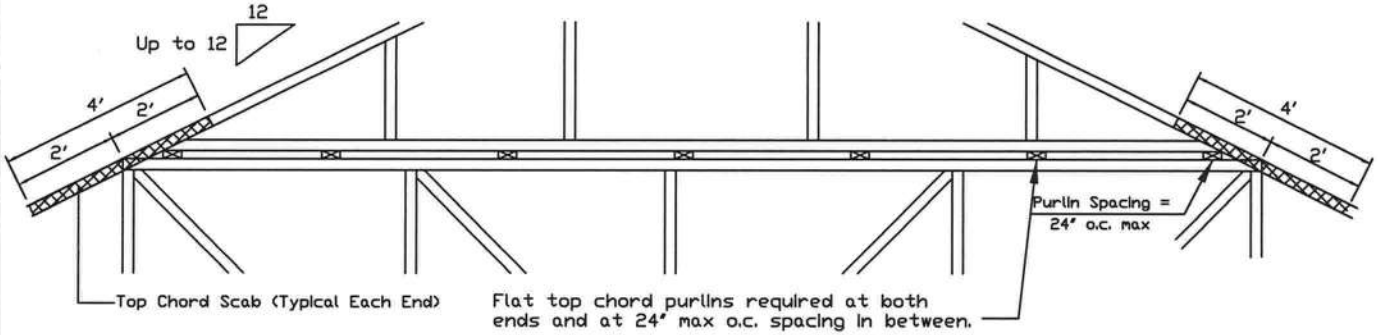

Piggyback cap truss slant nailed to all top chord purlin bracing with (2) 16d box nails (0.135"x3.5") and secure top chord with 2x4 #3 grade scab (1 side only at each end) attached with 2 rows of 10d box nails (0.128"x3") at 4" o.c.

Attach purlin bracing to the flat top chord using (2) 16d box nails (0.135"x3.5").

The top chord #3 grade 2x4 scab may be replaced with either of the following: (1) 3X8 Trulox plate attached with (8) 0.120"x1.375" nails, (4) into cap TC & (4) into base truss TC or (1) 28PB wave piggyback plate plated to the piggyback truss TC and attached to the base truss TC with (4) 0.120"x1.375" nails. Note: Nailing thru holes of wave plate is acceptable.

Detail B : Purlin Spacing > 24" o.c.

Piggyback cap truss slant nailed to all top chord purlin bracing with (2) 16d box nails (0.135"x3.5") and secure top chord with 2x4 #3 grade scab (1 side only at each end) attached with 2 rows of 10d box nails (0.128"x3") at 4" o.c.

Attach purlin bracing to the flat top chord using a minimum of (2) 16d box nails (0.135"x3.5").

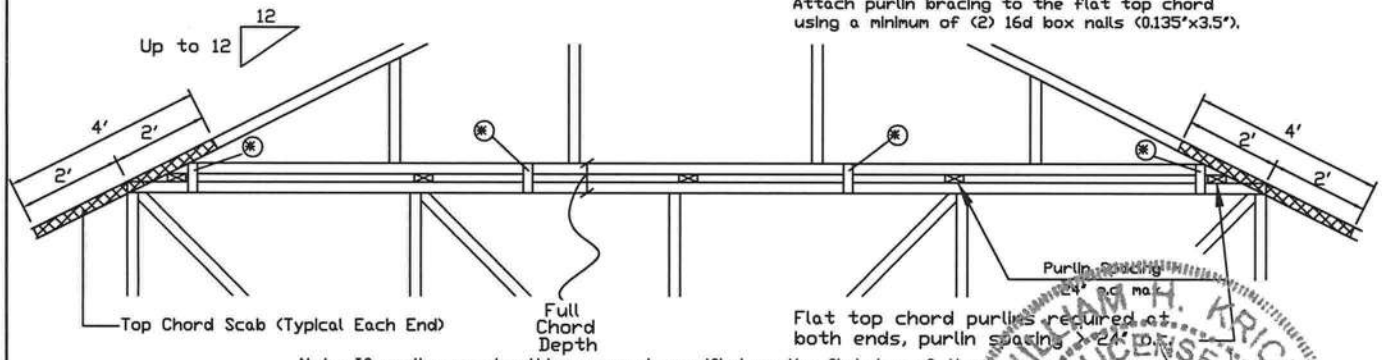

Note: If purlins or sheathing are not specified on the flat top of the base truss, purlins must be installed at 24" o.c. max. and use Detail A.

* In addition, provide connection with one of the following methods:

Trulox
Use 3X8 Trulox plates for 2x4 chord member, and 3X10 Trulox plates for 2x6 and larger chord members. Attach to each face @ 8" o.c. with (4) 0.120"x1.375" nails into cap bottom chord and (4) in base truss top chord. Trulox plates may be staggered 4" o.c. front to back faces.

APA Rated Gusset
8"x8"x7/16" (min) APA rated sheathing gussets (each face). Attach @ 8" o.c. with (8) 6d common (0.113"x2") nails per gusset, (4) in cap bottom chord and (4) in base truss top chord. Gussets may be staggered 4" o.c. front to back faces.

2x4 Vertical Scabs
2x4 SPF #2, full chord depth scabs (each face). Attach @ 8" o.c. with (6) 10d box nails (0.128"x3") per scab, (3) in cap bottom chord and (3) in base truss top chord. Scabs may be staggered 4" o.c. front to back faces.

28PB Wave Piggyback Plate
One 28PB wave piggyback plate to each face @ 8" o.c. Attach teeth to piggyback at time of fabrication. Attach to supporting truss with (4) 0.120"x1.375" nails per face per ply. Piggyback plates may be staggered 4" o.c. front to back faces.

ALPINE
AN ITW COMPANY

13723 Riverport Drive
Suite 200
Maryland Heights, MO 63043

WARNING READ AND FOLLOW ALL NOTES ON THIS DRAWING
IMPORTANT FURNISH THIS DRAWING TO ALL CONTRACTORS INCLUDING THE INSTALLERS

Trusses require extreme care in fabricating, handling, shipping, installing and bracing. Refer to and follow the latest edition of BCSI (Building Component Safety Information, by TPI and SBCA) for safety practices prior to performing these functions. Installers shall provide temporary bracing per BCSI. Unless noted otherwise, top chord shall have properly attached structural sheathing and bottom chord shall have a properly attached rigid ceiling. Locations shown for permanent lateral restraint of webs shall have bracing installed per BCSI sections B3, B7 or B10, as applicable. Apply plates to each face of truss and position as shown above and on the Joint Details, unless noted otherwise. Refer to drawings 160A-Z for standard plate positions.

Alpine, a division of ITW Building Components Group Inc. shall not be responsible for any deviation from this drawing, any failure to build the truss in conformance with ANSI/TPI 1, or for handling, shipping, installation & bracing of trusses.

A seal on this drawing or cover page listing this drawing, indicates acceptance of professional engineering responsibility solely for the design shown. The suitability and use of this drawing for any structure is the responsibility of the Building Designer per ANSI/TPI 1 Sec.2.

For more information see this job's general notes page and these web sites:
ALPINE: www.alpineitw.com; TPI: www.tpinst.org; SBCA: www.sbcindustry.org; ICC: www.iccsafe.org

WILLIAM H. KRICK
LICENSE
No. 70861
STATE OF FLORIDA
PROFESSIONAL ENGINEER
COA #9278
05/24/2018

SPACING 24.0"

REF	PIGGYBACK
DATE	10/01/14
DRWG	PB160101014

Gable Stud Reinforcement Detail

ASCE 7-10: 140 mph Wind Speed, 30' Mean Height, Enclosed, Exposure C, Kzt = 1.00

Or: 120 mph Wind Speed, 30' Mean Height, Partially Enclosed, Exposure C, Kzt = 1.00
Or: 120 mph Wind Speed, 30' Mean Height, Enclosed, Exposure D, Kzt = 1.00
Or: 100 mph wind speed, 30' Mean Height, Partially Enclosed, Exposure D, Kzt = 1.00

Max Gable Vertical Length	2x4 Gable Vertical Spacing	Species	Brace Grade	No Braces	(1) 1x4 'L' Brace *		(1) 2x4 'L' Brace *		(2) 2x4 'L' Brace **		(1) 2x6 'L' Brace *		(2) 2x6 'L' Brace **	
					Group A	Group B	Group A	Group B	Group A	Group B	Group A	Group B	Group A	Group B
	24" o.c.	SPF HF	#1 / #2	4' 1"	6' 11"	7' 2"	8' 2"	8' 6"	9' 9"	10' 2"	12' 10"	13' 4"	14' 0"	14' 0"
			#3	3' 10"	6' 2"	6' 7"	8' 1"	8' 5"	9' 8"	10' 0"	12' 8"	13' 2"	14' 0"	14' 0"
			Stud	3' 10"	6' 2"	6' 6"	8' 1"	8' 5"	9' 8"	10' 0"	12' 8"	13' 2"	14' 0"	14' 0"
			Standard	3' 10"	5' 3"	5' 7"	7' 0"	7' 6"	9' 6"	10' 0"	11' 0"	11' 10"	14' 0"	14' 0"
		SP DFL	#1	4' 2"	7' 0"	7' 3"	8' 3"	8' 7"	9' 10"	10' 3"	13' 0"	13' 6"	14' 0"	14' 0"
			#2	4' 1"	6' 11"	7' 2"	8' 2"	8' 6"	9' 9"	10' 2"	12' 10"	13' 4"	14' 0"	14' 0"
			#3	4' 0"	5' 7"	5' 11"	7' 5"	7' 11"	9' 8"	10' 1"	11' 7"	12' 5"	14' 0"	14' 0"
			Stud	4' 0"	5' 7"	5' 11"	7' 5"	7' 11"	9' 8"	10' 1"	11' 7"	12' 5"	14' 0"	14' 0"
			Standard	3' 9"	4' 11"	5' 13"	6' 6"	7' 0"	8' 10"	9' 6"	10' 3"	11' 0"	13' 11"	14' 0"
	16" o.c.	SPF HF	#1 / #2	4' 8"	7' 11"	8' 3"	9' 4"	9' 9"	11' 2"	11' 7"	14' 0"	14' 0"	14' 0"	14' 0"
			#3	4' 5"	7' 6"	8' 3"	9' 3"	9' 7"	11' 0"	11' 6"	14' 0"	14' 0"	14' 0"	14' 0"
			Stud	4' 5"	7' 6"	8' 0"	9' 3"	9' 7"	11' 0"	11' 6"	14' 0"	14' 0"	14' 0"	14' 0"
			Standard	4' 5"	6' 5"	6' 10"	8' 7"	9' 2"	11' 0"	11' 6"	13' 6"	14' 0"	14' 0"	14' 0"
		SP DFL	#1	4' 10"	8' 0"	8' 4"	9' 6"	9' 10"	11' 3"	11' 9"	14' 0"	14' 0"	14' 0"	14' 0"
			#2	4' 8"	7' 11"	8' 3"	9' 4"	9' 9"	11' 2"	11' 7"	14' 0"	14' 0"	14' 0"	14' 0"
			#3	4' 7"	6' 10"	7' 3"	9' 1"	9' 8"	11' 1"	11' 6"	14' 0"	14' 0"	14' 0"	14' 0"
			Stud	4' 7"	6' 10"	7' 3"	9' 1"	9' 8"	11' 1"	11' 6"	14' 0"	14' 0"	14' 0"	14' 0"
			Standard	4' 5"	6' 0"	6' 5"	8' 0"	8' 7"	10' 10"	11' 6"	12' 7"	13' 15"	14' 0"	14' 0"
	12" o.c.	SPF HF	#1 / #2	5' 2"	8' 9"	9' 1"	10' 4"	10' 9"	11' 2"	12' 9"	14' 0"	14' 0"	14' 0"	14' 0"
			#3	4' 10"	8' 7"	8' 11"	10' 2"	10' 7"	12' 2"	12' 8"	14' 0"	14' 0"	14' 0"	14' 0"
			Stud	4' 10"	8' 7"	8' 11"	10' 2"	10' 7"	12' 2"	12' 8"	14' 0"	14' 0"	14' 0"	14' 0"
			Standard	4' 10"	7' 5"	7' 11"	9' 11"	10' 7"	12' 2"	12' 8"	14' 0"	14' 0"	14' 0"	14' 0"
		SP DFL	#1	5' 4"	8' 10"	9' 2"	10' 5"	10' 10"	12' 5"	12' 11"	14' 0"	14' 0"	14' 0"	14' 0"
			#2	5' 2"	8' 9"	9' 1"	10' 4"	10' 9"	12' 3"	12' 9"	14' 0"	14' 0"	14' 0"	14' 0"
			#3	5' 0"	7' 10"	8' 4"	10' 3"	10' 8"	12' 2"	12' 8"	14' 0"	14' 0"	14' 0"	14' 0"
			Stud	5' 0"	7' 10"	8' 4"	10' 3"	10' 8"	12' 2"	12' 8"	14' 0"	14' 0"	14' 0"	14' 0"
			Standard	4' 10"	6' 11"	7' 4"	9' 3"	9' 10"	12' 2"	12' 8"	14' 0"	14' 0"	14' 0"	14' 0"

Bracing Group Species and Grades:

Group A:

Spruce-Pine-Fir: #1 / #2 — Standard; #3 — Stud

Hem-Fir: #2 — Stud; #3 — Standard

Douglas Fir-Larch: #3; Stud; Standard

Southern Pine***: #3; Stud; Standard

Group B:

Hem-Fir: #1 & Btr; #1

Douglas Fir-Larch: #1; #2

Southern Pine***: #1; #2

1x4 Braces shall be SRB (Stress-Rated Board).

***For 1x4 So. Pine use only Industrial 55 or Industrial 45 Stress-Rated Boards. Group B values may be used with these grades.

Gable Truss Detail Notes:

Wind Load deflection criterion is L/240.

Provide uplift connections for 100 plf over continuous bearing (5 psf TC Dead Load).

Gable end supports load from 4' 0" outlookers with 2' 0" overhang, or 12" plywood overhang.

Attach 'L' braces with 10d (0.128"x3.0" min) nails.

* For (1) 'L' brace: space nails at 2" o.c. in 18" end zones and 4" o.c. between zones.

** For (2) 'L' braces: space nails at 3" o.c. in 18" end zones and 6" o.c. between zones.

'L' bracing must be a minimum of 80% of web member length.

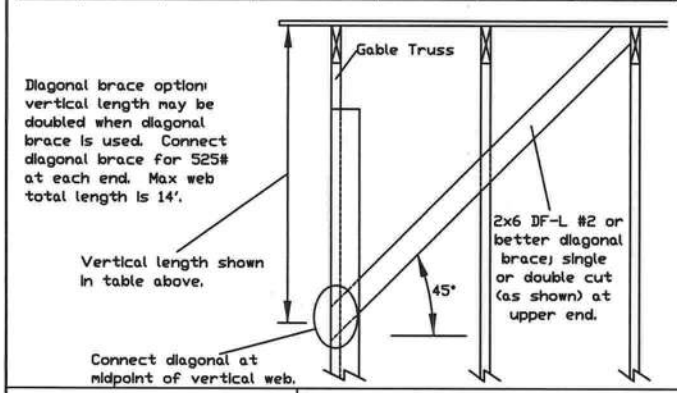

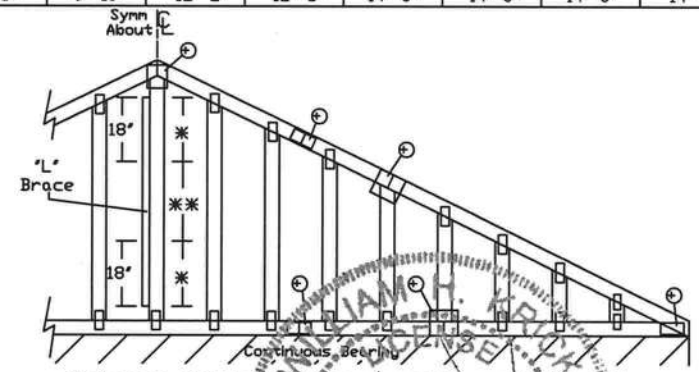

Refer to chart above for max gable vertical length.

Gable Vertical Plate Sizes

Vertical Length	No Splice
Less than 4' 0"	2X4
Greater than 4' 0", but less than 11' 6"	3X4
Greater than 11' 6"	4X4

+ Refer to common truss design for peak, splice, and heel plates.

Refer to the Building Designer for conditions not addressed by this detail.

ALPINE™ AN ITW COMPANY
13723 Riverport Drive
Suite 200
Maryland Heights, MO 63043

WARNING READ AND FOLLOW ALL NOTES ON THIS DRAWING!
IMPORTANT FURNISH THIS DRAWING TO ALL CONTRACTORS INCLUDING THE INSTALLERS.

Trusses require extreme care in fabricating, handling, shipping, installing and bracing. Refer to and follow the latest edition of BCSI (Building Component Safety Information, by TPI and SBCA) for safety practices prior to performing these functions. Installers shall provide temporary bracing per BCSI. Unless noted otherwise, top chord shall have properly attached structural sheathing and bottom chord shall have a properly attached rigid ceiling. Locations shown for permanent lateral restraint of webs shall have bracing installed per BCSI sections B3, B7 or B10, as applicable. Apply plates to each face of truss and position as shown above and on the Joint Details, unless noted otherwise. Refer to drawings 160A-Z for standard plate positions.

Alpine, a division of ITW Building Components Group Inc. shall not be responsible for any deviation from this drawing, any failure to build the truss in conformance with ANSI/TPI 1, or for handling, shipping, installation & bracing of trusses.

A seal on this drawing or cover page listing this drawing, indicates acceptance of professional engineering responsibility solely for the design shown. The suitability and use of this drawing for any structure is the responsibility of the Building Designer per ANSI/TPI 1 Sec.2.

For more information see this job's general notes page and these web sites:
ALPINE: www.alpineitw.com; TPI: www.tpinst.org; SBCA: www.sbcindustry.org; ICC: www.iccsafe.org

WILLIAM H. KRUSE LICENSED No. 70861 STATE OF FLORIDA PROFESSIONAL ENGINEER

COA #0527182018

MAX. TOT. LD. 60 PSF

MAX. SPACING 24.0"

REF	ASCE7-10-GAB14030
DATE	10/01/14
DRWG	A14030ENC101014

Valley Detail - ASCE 7-10: 160 mph, 30' Mean Height, Enclosed, Exp. C, Kzt=1.00

Top Chord 2x4 SP #2N, SPF #1/#2, DF-L #2 or better.
Bot Chord 2x4 SP #2N or SPF #1/#2 or better.
Webs 2x4 SP #3, SPF #1/#2, DF-L #2 or better.

** Attach each valley to every supporting truss with:
(2) 16d box (0.135" x 3.5") nails toe-nailed for ASCE 7-10 160 mph. 30' Mean Height, Enclosed Building, Exp. C, Wind TC DL=5 psf, Kzt = 1.00
Or
ASCE 7-10 140 mph. 30' Mean Height, Enclosed Building, Exp. D, Wind TC DL=5 psf, Kzt = 1.00

Bottom chord may be square or pitched cut as shown.

Valleys short enough to be cut as solid triangular members from a single 2x6, or larger as required, shall be permitted in lieu of fabricating from separate 2x4 members.

All plates shown are ITW BCG Wave Plates.

Unless specified otherwise on engineer's sealed design, for vertical valley webs taller than 7-9" apply 2x4 "T" reinforcement, 80% length of web, same species and grade or better, attached with 10d box (0.128" x 3.0") nails at 6" o.c. In lieu of "T" reinforcement, 2x4 Continuous Lateral Restraint applied at mid-length of web is permitted with diagonal bracing as shown in DRWG BRCLBANC1014.

Top chord of truss beneath valley set must be braced with:
properly attached, rated sheathing applied prior to valley truss installation.
Or
Purlins at 24" o.c. or as otherwise specified on engineer's sealed design
Or
By valley trusses used in lieu of purlin spacing as specified on Engineer's sealed design.

*** Note that the purlin spacing for bracing the top chord of the truss beneath the valley is measured along the slope of the top chord.

++ Larger spans may be built as long as the vertical height does not exceed 14'-0".

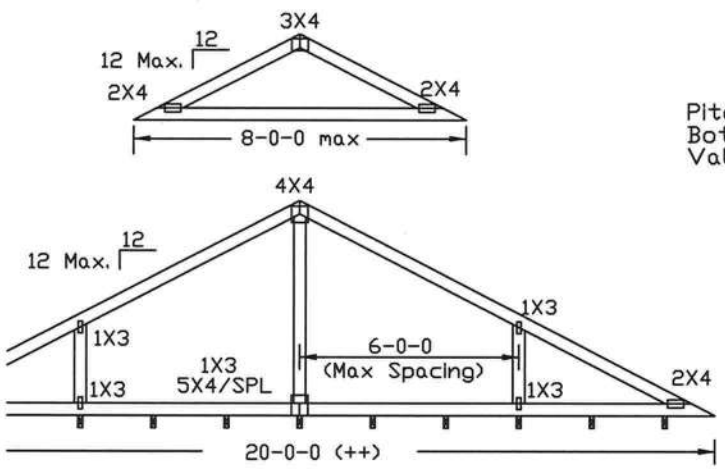

Supporting trusses at 24" o.c. maximum spacing.

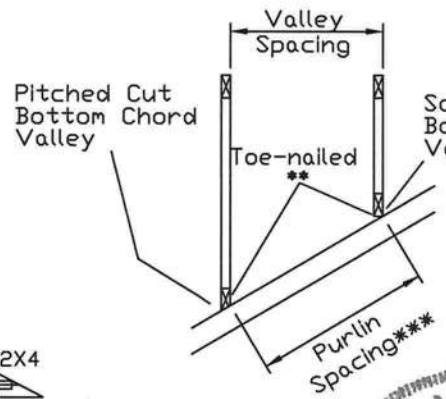

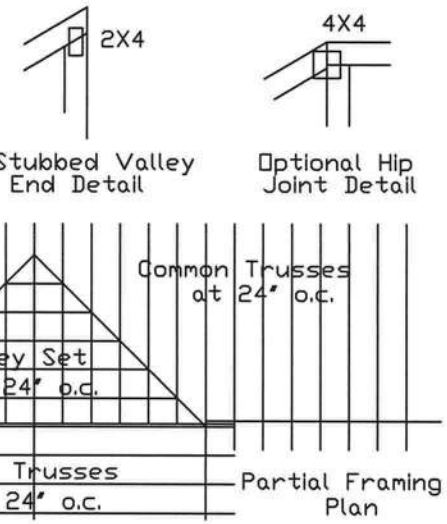

ALPINE
AN ITW COMPANY
13723 Riverport Drive
Suite 200
Maryland Heights, MO 63043

WARNING READ AND FOLLOW ALL NOTES ON THIS DRAWING
IMPORTANT FURNISH THIS DRAWING TO ALL CONTRACTORS INCLUDING THE INSTALLERS.

Trusses require extreme care in fabricating, handling, shipping, installing and bracing. Refer to and follow the latest edition of BCSI (Building Component Safety Information, by TPI and SBCA) for safety practices prior to performing these functions. Installers shall provide temporary bracing per BCSI. Unless noted otherwise, top chord shall have properly attached structural sheathing and bottom chord shall have a properly attached rigid ceiling. Locations shown for permanent lateral restraint of webs shall have bracing installed per BCSI sections B3, B7 or B10, as applicable. Apply plates to each face of truss and position as shown above and on the Joint Details, unless noted otherwise. Refer to drawings 160A-Z for standard plate positions.

Alpine, a division of ITW Building Components Group Inc. shall not be responsible for any deviation from this drawing, any failure to build the truss in conformance with ANSI/TPI 1, or for handling, shipping, installation & bracing of trusses.

A seal on this drawing or cover page listing this drawing, indicates acceptance of professional engineering responsibility solely for the design shown. The suitability and use of this drawing for any structure is the responsibility of the Building Designer per ANSI/TPI 1 Sec.2.

For more information see this job's general notes page and these web sites:
ALPINE: www.alpineitw.com; TPI: www.tpinst.org; SBCA: www.sbcindustry.org; ICC: www.iccsafe.org

WILLIAM H. KRICK
LICENSE
No. 70861
STATE OF FLORIDA
PROFESSIONAL ENGINEER
COA #8278
05/24/2018

TC LL	30	30	40PSF	
TC DL	20	15	7PSF	
BC DL	10	10	10 PSF	
BC LL	0	0	0PSF	
TOT. LD.	60	55	57PSF	
DUR.FAC.	1.25/1.33	1.15	1.15	
SPACING		24.0"		

REF	VALLEY DETAIL
DATE	10/01/2014
DRWG	VAL160101014

Job Number: 18-2262 FREEMAN **Truss Label:** B06	Ply: 2 Qty: 1	SEQN: 556564 / T10 HIPS FROM: CDM Page 2 of 2	Cust: R215 JRef: 1Wb72150004 DrwNo: 144.18.0743.42120 KM / BAF 05/24/2018

Special Loads

------(Lumber Dur.Fac.=1.25 / Plate Dur.Fac.=1.25)

TC: From	62 plf at	0.00 to	62 plf at	20.50
TC: From	31 plf at	20.50 to	31 plf at	49.83
TC: From	62 plf at	49.83 to	62 plf at	58.00
BC: From	20 plf at	0.00 to	20 plf at	20.21
BC: From	10 plf at	20.21 to	10 plf at	49.80
BC: From	20 plf at	49.80 to	20 plf at	58.00

TC: 130 lb Conc. Load at 8.23,10.23,12.23,14.23 16.23,18.23

TC: 124 lb Conc. Load at 20.23,22.23,24.23,26.23 28.23,29.77,31.77,33.77,35.77,37.77,39.77,41.77 43.77,45.77,47.77,49.77

BC: 388 lb Conc. Load at 8.20

BC: 74 lb Conc. Load at 10.23,12.23,14.23,16.23 18.23

BC: 69 lb Conc. Load at 20.23,22.23,24.23,26.23 28.23,29.77,31.77,33.77,35.77,37.77,39.77,41.77 43.77,45.77,47.77

BC: 366 lb Conc. Load at 49.80

WILLIAM H. KRICK
LICENSE
No. 70861
STATE OF
FLORIDA
PROFESSIONAL ENGINEER

COA #0278

05/24/2018

****WARNING**** READ AND FOLLOW ALL NOTES ON THIS DRAWING!
****IMPORTANT**** FURNISH THIS DRAWING TO ALL CONTRACTORS INCLUDING THE INSTALLERS

Trusses require extreme care in fabricating, handling, shipping, installing and bracing. Refer to and follow the latest edition of BCSI (Building Component Safety Information, by TPI and SBCA) for safety practices prior to performing these functions. Installers shall provide temporary bracing per BCSI. Unless noted otherwise,top chord shall have properly attached structural sheathing and bottom chord shall have a properly attached rigid ceiling. Locations shown for permanent lateral restraint of webs shall have bracing installed per BCSI sections B3, B7, or B10, as applicable. Apply plates to each face of truss and position as shown above and on the Joint Details, unless noted otherwise. Refer to drawings 160A-Z for standard plate positions.

Alpine, a division of ITW Building Components Group Inc. shall not be responsible for any deviation from this drawing,any failure to build the truss in conformance with ANSI/TPI 1, or for handling, shipping, installation and bracing of trusses**A seal on this drawing or cover page listing this drawing, indicates acceptance of professional engineering responsibility solely for the design shown. The suitability and use of this drawing for any structure is the responsibility of the Building Designer per ANSI/TPI 1 Sec.2.**

For more information see this job's general notes page and these web sites: ALPINE: www.alpineitw.com; TPI: www.tpinst.org; SBCA: www.sbcindustry.com; ICC: www.iccsafe.org

ALPINE
AN ITW COMPANY
6750 Forum Drive
Suite 305
Orlando FL, 32821

Job Number: 18-2262 FREEMAN **Truss Label:** C01	Ply: 1 Qty: 1	SEQN: 555912 / T37 HIPM FROM: CDM	Cust: R215 JRef: 1Wb72150004 DrwNo: 144.18.0743.45947 KM / BAF 05/24/2018

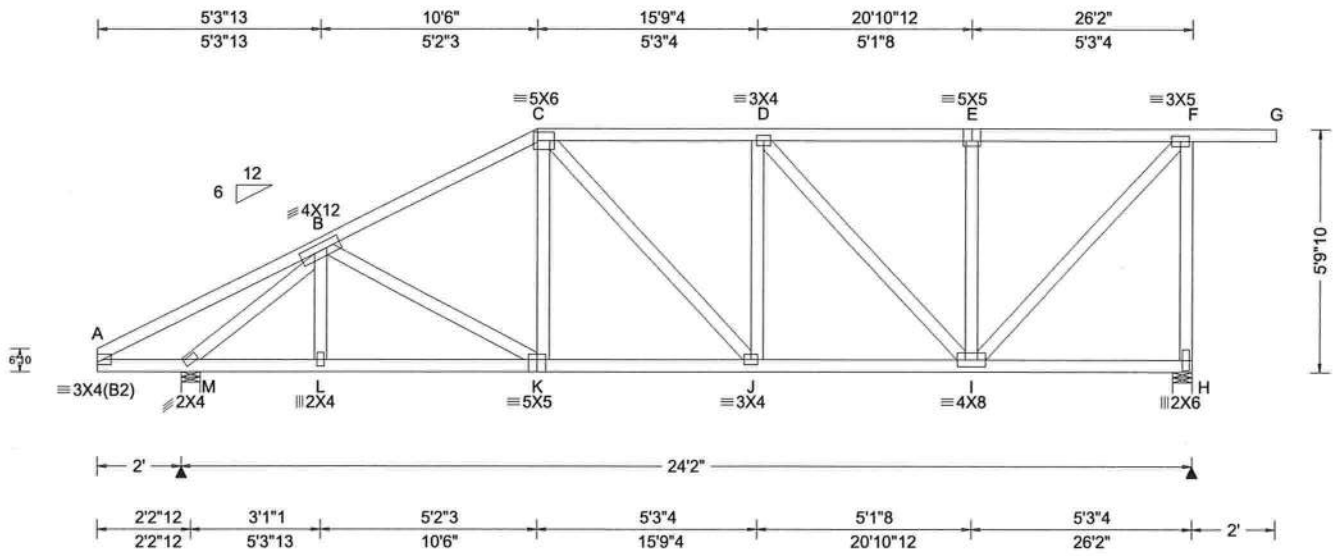

Loading Criteria (psf)

TCLL: 20.00
TCDL: 10.00
BCLL: 0.00
BCDL: 10.00
Des Ld: 40.00
NCBCLL: 10.00
Soffit: 2.00
Load Duration: 1.25
Spacing: 24.0 "

Wind Criteria

Wind Std: ASCE 7-10
Speed: 130 mph
Enclosure: Closed
Risk Category: II
EXP: C
Mean Height: 15.00 ft
TCDL: 5.0 psf
BCDL: 5.0 psf
MWFRS Parallel Dist: h/2 to h
C&C Dist a: 3.00 ft
Loc. from endwall: not in 9.00 ft
GCpi: 0.18
Wind Duration: 1.60

Snow Criteria (Pg,Pf in PSF)

Pg: NA Ct: NA CAT: NA
Pf: NA Ce: NA
Lu: NA Cs: NA
Snow Duration: NA

Code / Misc Criteria

Bldg Code: FBC 2017 RES
TPI Std: 2014
Rep Factors Used: Yes
FT/RT:20(0)/10(0)
Plate Type(s):
WAVE

Defl/CSI Criteria

PP Deflection in	loc	L/defl	L/#
VERT(LL): 0.037	J	999	240
VERT(TL): 0.114	J	999	180
HORZ(LL): 0.014	I	-	-
HORZ(TL): 0.030	I	-	-

Creep Factor: 2.0
Max TC CSI: 0.474
Max BC CSI: 0.454
Max Web CSI: 0.644

VIEW Ver: 17.02.00.1013.16

▲ Maximum Reactions (lbs)

Loc	R	/ U	/ Rw	/ Rh	/ RL	/ W
M	1172	/ 174	/ 753	/ -	/ 150	/ 5.5
H	1121	/ 273	/ 543	/ -	/ -	/ 5.5

Wind reactions based on MWFRS
M Min Brg Width Req = 1.5
H Min Brg Width Req = 1.5
Bearings M & H are a rigid surface.

Members not listed have forces less than 375#

Maximum Top Chord Forces Per Ply (lbs)

Chords	Tens.	Comp.	Chords	Tens.	Comp.
B - C	320	- 1172	D - E	205	- 744
C - D	314	- 1058	E - F	205	- 744

Maximum Bot Chord Forces Per Ply (lbs)

Chords	Tens.	Comp.	Chords	Tens.	Comp.
M - L	925	- 372	K - J	980	- 328
L - K	926	- 371	J - I	1057	- 314

Maximum Web Forces Per Ply (lbs)

Webs	Tens.	Comp.	Webs	Tens.	Comp.
M - B	393	- 1509	I - F	1076	- 296
D - I	163	- 466	F - H	371	- 1078

Lumber

Top chord 2x4 SP #2
Bot chord 2x4 SP #2
Webs 2x4 SP #3

Purlins

In lieu of structural panels use purlins to brace all flat TC @ 24" oc.

Wind

Wind loads based on MWFRS with additional C&C member design.

Right end vertical not exposed to wind pressure.

Left cantilever is exposed to wind

Additional Notes

The overall height of this truss excluding overhang is 5-9-10.

WILLIAM H. KRICK
LICENSE
No. 70861
STATE OF FLORIDA
PROFESSIONAL ENGINEER

COA #0278

05/24/2018

****WARNING**** READ AND FOLLOW ALL NOTES ON THIS DRAWING!
****IMPORTANT**** FURNISH THIS DRAWING TO ALL CONTRACTORS INCLUDING THE INSTALLERS

Trusses require extreme care in fabricating, handling, shipping, installing and bracing. Refer to and follow the latest edition of BCSI (Building Component Safety Information, by TPI and SBCA) for safety practices prior to performing these functions. Installers shall provide temporary bracing per BCSI. Unless noted otherwise,top chord shall have properly attached structural sheathing and bottom chord shall have a properly attached rigid ceiling. Locations shown for permanent lateral restraint of webs shall have bracing installed per BCSI sections B3, B7, or B10, as applicable. Apply plates to each face of truss and position as shown above and on the Joint Details, unless noted otherwise. Refer to drawings 160A-Z for standard plate positions.

Alpine, a division of ITW Building Components Group Inc. shall not be responsible for any deviation from this drawing,any failure to build the truss in conformance with ANSI/TPI 1, or for handling, shipping, installation and bracing of trusses**A seal on this drawing or cover page listing this drawing, indicates acceptance of professional engineering responsibility solely for the design shown. The suitability and use of this drawing for any structure is the responsibility of the Building Designer per ANSI/TPI 1 Sec.2.**

For more information see this job's general notes page and these web sites: ALPINE: www.alpineitw.com; TPI: www.tpinst.org; SBCA: www.sbcindustry.com; ICC: www.iccsafe.org

ALPINE™ AN ITW COMPANY
6750 Forum Drive
Suite 305
Orlando FL, 32821

Job Number: 18-2262 FREEMAN **Truss Label:** C02	Ply: 2 Qty: 1	SEQN: 556438 / T40 HIPM FROM: CDM	Cust: R215 JRef: 1Wb72150004 DrwNo: 144.18.0743.47967 KM / BAF 05/24/2018

2 Complete Trusses Required

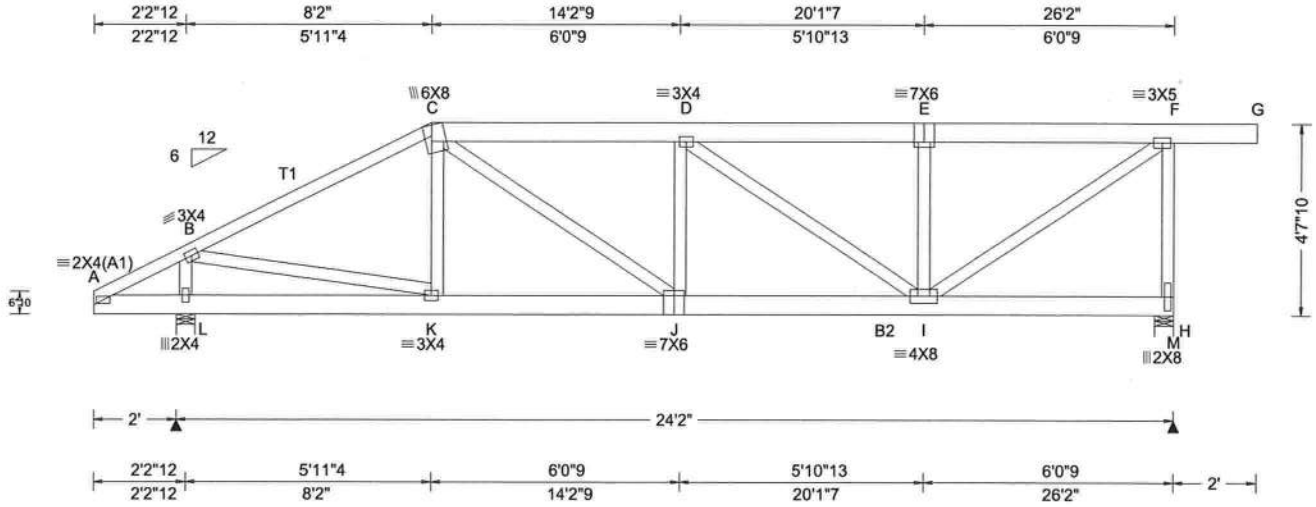

Loading Criteria (psf)

TCLL: 20.00
TCDL: 10.00
BCLL: 0.00
BCDL: 10.00
Des Ld: 40.00
NCBCLL: 0.00
Soffit: 2.00
Load Duration: 1.25
Spacing: 24.0 "

Wind Criteria

Wind Std: ASCE 7-10
Speed: 130 mph
Enclosure: Closed
Risk Category: II
EXP: C
Mean Height: 15.00 ft
TCDL: 5.0 psf
BCDL: 5.0 psf
MWFRS Parallel Dist: 0 to h/2
C&C Dist a: 3.00 ft
Loc. from endwall: Any
GCpi: 0.18
Wind Duration: 1.60

Snow Criteria (Pg,Pf in PSF)

Pg: NA Ct: NA CAT: NA
Pf: NA Ce: NA
Lu: NA Cs: NA
Snow Duration: NA

Code / Misc Criteria

Bldg Code: FBC 2017 RES
TPI Std: 2014
Rep Factors Used: No
FT/RT:20(0)/10(0)
Plate Type(s):
WAVE

Defl/CSI Criteria

PP Deflection in	loc	L/defl	L/#
VERT(LL): 0.038	D	999	240
VERT(TL): 0.116	D	999	180
HORZ(LL): 0.007	C	-	-
HORZ(TL): 0.015	C	-	-

Creep Factor: 2.0
Max TC CSI: 0.203
Max BC CSI: 0.288
Max Web CSI: 0.450

VIEW Ver: 17.02.00.1013.16

▲ Maximum Reactions (lbs)

Loc	R	/ U	/ Rw	/ Rh	/ RL	/ W
L	1844	/ 622	/ -	/ -	/ -	/ 5.5
M	2751	/ 1372	/ -	/ -	/ -	/ 5.5

Wind reactions based on MWFRS
L Min Brg Width Req = 1.5
M Min Brg Width Req = 1.6
Bearings L & M are a rigid surface.

Members not listed have forces less than 375#

Maximum Top Chord Forces Per Ply (lbs)

Chords	Tens.	Comp.	Chords	Tens.	Comp.
B - C	441	- 1160	D - E	365	- 973
C - D	484	- 1284	E - F	365	- 973

Maximum Bot Chord Forces Per Ply (lbs)

Chords	Tens.	Comp.	Chords	Tens.	Comp.
K - J	1005	- 381	J - I	1288	- 488

Maximum Web Forces Per Ply (lbs)

Webs	Tens.	Comp.	Webs	Tens.	Comp.
L - B	319	- 828	I - F	1182	- 444
B - K	915	- 350	F - H	312	- 806
D - I	152	- 389			

Lumber

Top chord 2x6 SP #2 :T1 2x4 SP #2:
Bot chord 2x6 SP 2400f-2.0E :B2 2x6 SP #2:
Webs 2x4 SP #3

Nailnote

Nail Schedule:0.131"x3", min. nails
Top Chord: 1 Row @12.00" o.c.
Bot Chord: 1 Row @12.00" o.c.
Webs : 1 Row @ 4" o.c.
Use equal spacing between rows and stagger nails in each row to avoid splitting.

Special Loads

------(Lumber Dur.Fac.=1.25 / Plate Dur.Fac.=1.25)
TC: From 62 plf at 0.00 to 62 plf at 8.17
TC: From 31 plf at 8.17 to 31 plf at 28.17
BC: From 20 plf at 0.00 to 20 plf at 8.20
BC: From 10 plf at 8.20 to 10 plf at 26.17
BC: From 4 plf at 26.17 to 4 plf at 28.17
TC: 124 lb Conc. Load at 8.23,10.23,12.23,14.23 16.23,18.23,20.23,22.23,24.23
BC: 366 lb Conc. Load at 8.20
BC: 69 lb Conc. Load at 10.23,12.23,14.23,16.23 18.23,20.23,22.23,24.23
BC: 1069 lb Conc. Load at 26.10

Purlins

In lieu of structural panels use purlins to brace all flat TC @ 24" oc.

Additional Notes

The overall height of this truss excluding overhang is 4-7-10.

Wind

Wind loads and reactions based on MWFRS.
Right end vertical not exposed to wind pressure.
Left cantilever is exposed to wind

WILLIAM H. KRICK
LICENSE
No. 70861
STATE OF FLORIDA
PROFESSIONAL ENGINEER

COA #0278

05/24/2018

****WARNING**** READ AND FOLLOW ALL NOTES ON THIS DRAWING!
****IMPORTANT**** FURNISH THIS DRAWING TO ALL CONTRACTORS INCLUDING THE INSTALLERS

Trusses require extreme care in fabricating, handling, shipping, installing and bracing. Refer to and follow the latest edition of BCSI (Building Component Safety Information, by TPI and SBCA) for safety practices prior to performing these functions. Installers shall provide temporary bracing per BCSI. Unless noted otherwise,top chord shall have properly attached structural sheathing and bottom chord shall have a properly attached rigid ceiling. Locations shown for permanent lateral restraint of webs shall have bracing installed per BCSI sections B3, B7, or B10, as applicable. Apply plates to each face of truss and position as shown above and on the Joint Details, unless noted otherwise. Refer to drawings 160A-Z for standard plate positions.

Alpine, a division of ITW Building Components Group Inc. shall not be responsible for any deviation from this drawing,any failure to build the truss in conformance with ANSI/TPI 1, or for handling, shipping, installation and bracing of trusses**A seal on this drawing or cover page listing this drawing, indicates acceptance of professional engineering responsibility solely for the design shown. The suitability and use of this drawing for any structure is the responsibility of the Building Designer per ANSI/TPI 1 Sec.2.**

For more information see this job's general notes page and these web sites: ALPINE: www.alpineitw.com; TPI: www.tpinst.org; SBCA: www.sbcindustry.com; ICC: www.iccsafe.org

ALPINE™ AN ITW COMPANY
6750 Forum Drive
Suite 305
Orlando FL, 32821

Job Number: 18-2262 FREEMAN **Truss Label:** D01	Ply: 1 Qty: 3	SEQN: 555985 / T69 COMN FROM: CDM	Cust: R215 JRef: 1Wb72150004 DrwNo: 144.18.0743.49780 KM / BAF 05/24/2018

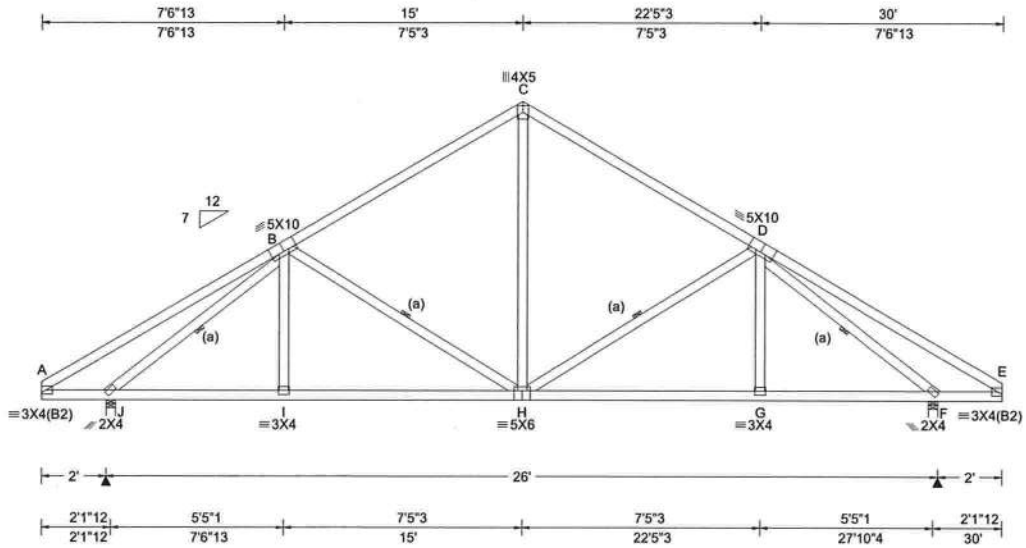

Loading Criteria (psf)

TCLL:	20.00
TCDL:	10.00
BCLL:	0.00
BCDL:	10.00
Des Ld:	40.00
NCBCLL:	10.00
Soffit:	2.00

Load Duration: 1.25
Spacing: 24.0 "

Wind Criteria
Wind Std: ASCE 7-10
Speed: 130 mph
Enclosure: Closed
Risk Category: II
EXP: C
Mean Height: 15.00 ft
TCDL: 5.0 psf
BCDL: 5.0 psf
MWFRS Parallel Dist: h to 2h
C&C Dist a: 3.00 ft
Loc. from endwall: not in 9.00 ft
GCpi: 0.18
Wind Duration: 1.60

Snow Criteria (Pg,Pf in PSF)
Pg: NA Ct: NA CAT: NA
Pf: NA Ce: NA
Lu: NA Cs: NA
Snow Duration: NA

Code / Misc Criteria
Bldg Code: FBC 2017 RES
TPI Std: 2014
Rep Factors Used: Yes
FT/RT:20(0)/10(0)
Plate Type(s):
WAVE

Defl/CSI Criteria

PP Deflection in	loc	L/defl	L/#
VERT(LL): 0.039	H	999	240
VERT(TL): 0.125	H	999	180
HORZ(LL): 0.021	F	-	-
HORZ(TL): 0.044	F	-	-

Creep Factor: 2.0
Max TC CSI: 0.897
Max BC CSI: 0.672
Max Web CSI: 0.498

VIEW Ver: 17.02.00.1013.16

▲ Maximum Reactions (lbs)

Loc	R	/ U	/ Rw	/ Rh	/ RL	/ W
J	1251	/ 2	/ 765	/ -	/ 223	/ 3.5
F	1251	/ 2	/ 765	/ -	/ -	/ 3.5

Wind reactions based on MWFRS
J Min Brg Width Req = 1.5
F Min Brg Width Req = 1.5
Bearings J & F are a rigid surface.

Members not listed have forces less than 375#

Maximum Top Chord Forces Per Ply (lbs)

Chords	Tens.	Comp.	Chords	Tens.	Comp.
B - C	298	-1037	C - D	298	-1037

Maximum Bot Chord Forces Per Ply (lbs)

Chords	Tens.	Comp.	Chords	Tens.	Comp.
J - I	1036	-156	H - G	1038	-155
I - H	1038	-155	G - F	1036	-156

Maximum Web Forces Per Ply (lbs)

Webs	Tens.	Comp.	Webs	Tens.	Comp.
J - B	358	-1601	D - F	358	-1601
C - H	529	-124			

Lumber
Top chord 2x4 SP #2
Bot chord 2x4 SP #2
Webs 2x4 SP #3

Bracing
(a) Continuous lateral restraint equally spaced on member.

Wind
Wind loads based on MWFRS with additional C&C member design.
Left and right cantilevers are exposed to wind

Additional Notes
The overall height of this truss excluding overhang is 9-3-10.

WILLIAM H. KRICK
LICENSE
No. 70861
STATE OF FLORIDA
PROFESSIONAL ENGINEER

COA #0278

05/24/2018

****WARNING**** READ AND FOLLOW ALL NOTES ON THIS DRAWING!
****IMPORTANT**** FURNISH THIS DRAWING TO ALL CONTRACTORS INCLUDING THE INSTALLERS

Trusses require extreme care in fabricating, handling, shipping, installing and bracing. Refer to and follow the latest edition of BCSI (Building Component Safety Information, by TPI and SBCA) for safety practices prior to performing these functions. Installers shall provide temporary bracing per BCSI. Unless noted otherwise,top chord shall have properly attached structural sheathing and bottom chord shall have a properly attached rigid ceiling. Locations shown for permanent lateral restraint of webs shall have bracing installed per BCSI sections B3, B7, or B10, as applicable. Apply plates to each face of truss and position as shown above and on the Joint Details, unless noted otherwise. Refer to drawings 160A-Z for standard plate positions.

Alpine, a division of ITW Building Components Group Inc. shall not be responsible for any deviation from this drawing,any failure to build the truss in conformance with ANSI/TPI 1, or for handling, shipping, installation and bracing of trusses**A seal on this drawing or cover page listing this drawing, indicates acceptance of professional engineering responsibility solely for the design shown. The suitability and use of this drawing for any structure is the responsibility of the Building Designer per ANSI/TPI 1 Sec.2.**

For more information see this job's general notes page and these web sites: ALPINE: www.alpineitw.com; TPI: www.tpinst.org; SBCA: www.sbcindustry.com; ICC: www.iccsafe.org

ALPINE
AN ITW COMPANY
6750 Forum Drive
Suite 305
Orlando FL, 32821

Job Number: 18-2262 FREEMAN **Truss Label:** D02	Ply: 1 Qty: 2	SEQN: 556440 / T80 SPEC FROM: CDM	Cust: R215 JRef: 1Wb72150004 DrwNo: 144.18.0743.51450 KM / BAF 05/24/2018

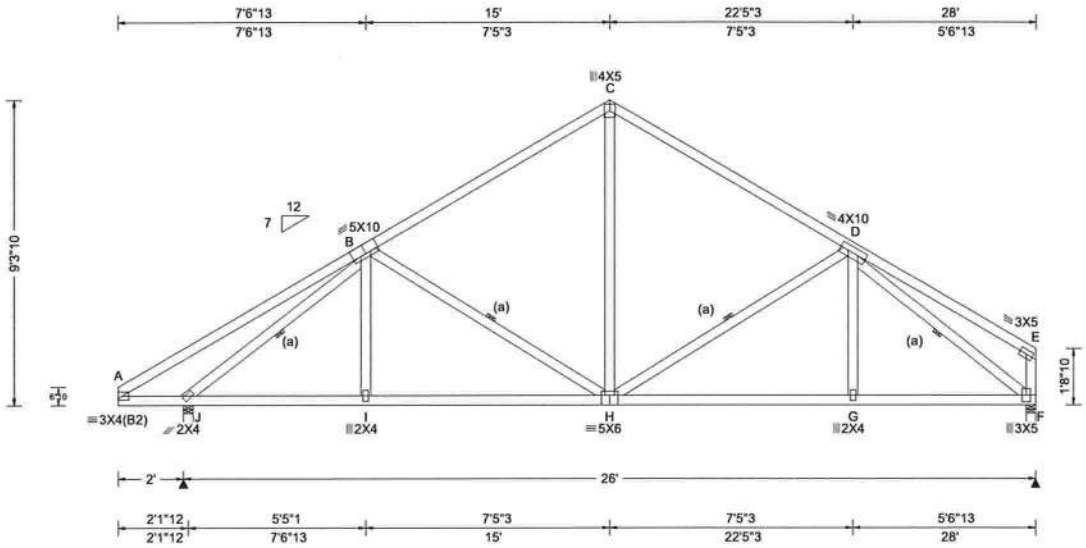

Loading Criteria (psf)

TCLL:	20.00
TCDL:	10.00
BCLL:	0.00
BCDL:	10.00
Des Ld:	40.00
NCBCLL:	10.00
Soffit:	2.00

Load Duration: 1.25
Spacing: 24.0 "

Wind Criteria
Wind Std: ASCE 7-10
Speed: 130 mph
Enclosure: Closed
Risk Category: II
EXP: C
Mean Height: 15.00 ft
TCDL: 5.0 psf
BCDL: 5.0 psf
MWFRS Parallel Dist: h to 2h
C&C Dist a: 3.00 ft
Loc. from endwall: not in 9.00 ft
GCpi: 0.18
Wind Duration: 1.60

Snow Criteria (Pg,Pf in PSF)
Pg: NA Ct: NA CAT: NA
Pf: NA Ce: NA
Lu: NA Cs: NA
Snow Duration: NA

Code / Misc Criteria
Bldg Code: FBC 2017 RES
TPI Std: 2014
Rep Factors Used: Yes
FT/RT:20(0)/10(0)
Plate Type(s):
WAVE

Defl/CSI Criteria

PP Deflection in	loc	L/defl	L/#
VERT(LL): 0.039	H	999	240
VERT(TL): 0.125	H	999	180
HORZ(LL): 0.024	E	-	-
HORZ(TL): 0.049	E	-	-

Creep Factor: 2.0
Max TC CSI: 0.887
Max BC CSI: 0.669
Max Web CSI: 0.503

VIEW Ver: 17.02.00.1013.16

▲ Maximum Reactions (lbs)

Loc	R	/ U	/ Rw	/ Rh	/ RL	/ W
J	1261	/ 1	/ 771	/ -	/ 216	/ 3.5
F	1071	/ 14	/ 605	/ -	/ -	/ 3.5

Wind reactions based on MWFRS
J Min Brg Width Req = 1.5
F Min Brg Width Req = 1.5
Bearings J & F are a rigid surface.

Members not listed have forces less than 375#

Maximum Top Chord Forces Per Ply (lbs)

Chords	Tens.	Comp.	Chords	Tens.	Comp.
B - C	298	-1059	C - D	304	-1055

Maximum Bot Chord Forces Per Ply (lbs)

Chords	Tens.	Comp.	Chords	Tens.	Comp.
J - I	1051	-196	H - G	1077	-191
I - H	1053	-196	G - F	1075	-191

Maximum Web Forces Per Ply (lbs)

Webs	Tens.	Comp.	Webs	Tens.	Comp.
J - B	358	-1616	D - F	237	-1367
C - H	541	-127			

Lumber

Top chord 2x4 SP #2
Bot chord 2x4 SP #2
Webs 2x4 SP #3

Bracing

(a) Continuous lateral restraint equally spaced on member.

Wind

Wind loads based on MWFRS with additional C&C member design.

Left cantilever is exposed to wind

Additional Notes

The overall height of this truss excluding overhang is 9-3-10.

WILLIAM H. KRICK
LICENSE
No. 70861
STATE OF FLORIDA
PROFESSIONAL ENGINEER

COA #0278

05/24/2018

****WARNING**** READ AND FOLLOW ALL NOTES ON THIS DRAWING!
****IMPORTANT**** FURNISH THIS DRAWING TO ALL CONTRACTORS INCLUDING THE INSTALLERS

Trusses require extreme care in fabricating, handling, shipping, installing and bracing. Refer to and follow the latest edition of BCSI (Building Component Safety Information, by TPI and SBCA) for safety practices prior to performing these functions. Installers shall provide temporary bracing per BCSI. Unless noted otherwise,top chord shall have properly attached structural sheathing and bottom chord shall have a properly attached rigid ceiling. Locations shown for permanent lateral restraint of webs shall have bracing installed per BCSI sections B3, B7, or B10, as applicable. Apply plates to each face of truss and position as shown above and on the Joint Details, unless noted otherwise. Refer to drawings 160A-Z for standard plate positions.

Alpine, a division of ITW Building Components Group Inc. shall not be responsible for any deviation from this drawing,any failure to build the truss in conformance with ANSI/TPI 1, or for handling, shipping, installation and bracing of trusses**A seal on this drawing or cover page listing this drawing, indicates acceptance of professional engineering responsibility solely for the design shown. The suitability and use of this drawing for any structure is the responsibility of the Building Designer per ANSI/TPI 1 Sec.2.**

For more information see this job's general notes page and these web sites: ALPINE: www.alpineitw.com; TPI: www.tpinst.org; SBCA: www.sbcindustry.com; ICC: www.iccsafe.org

ALPINE™ AN ITW COMPANY
6750 Forum Drive
Suite 305
Orlando FL, 32821

Job Number: 18-2262 FREEMAN **Truss Label:** D03	Ply: 1 Qty: 1	SEQN: 556442 / T68 HIPS FROM: CDM	Cust: R215 JRef: 1Wb72150004 DrwNo: 144.18.0743.53107 KM / BAF 05/24/2018

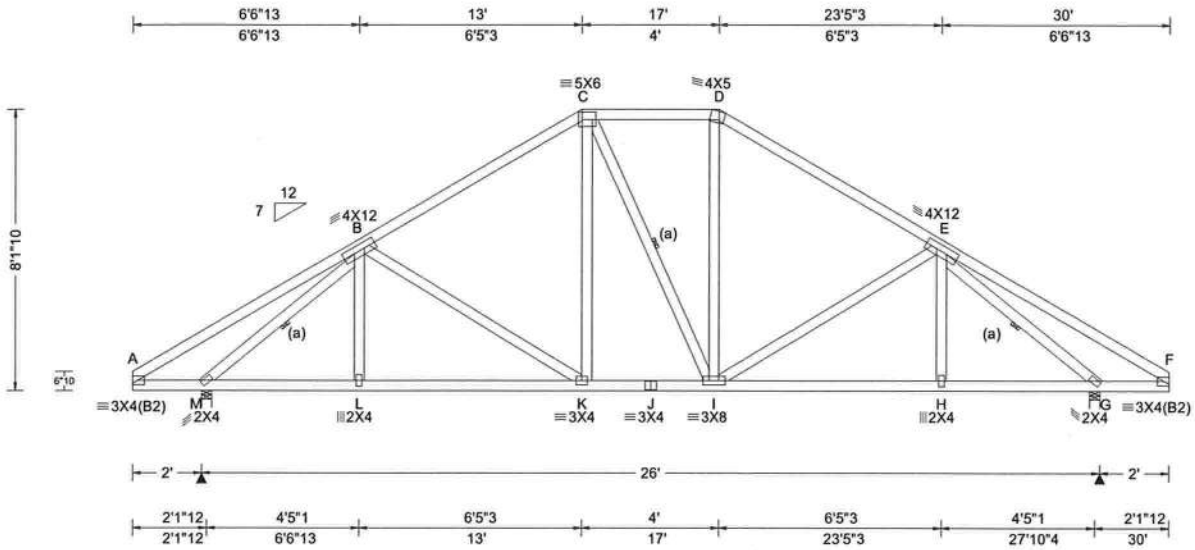

Loading Criteria (psf)
TCLL: 20.00
TCDL: 10.00
BCLL: 0.00
BCDL: 10.00
Des Ld: 40.00
NCBCLL: 10.00
Soffit: 2.00
Load Duration: 1.25
Spacing: 24.0 "

Wind Criteria
Wind Std: ASCE 7-10
Speed: 130 mph
Enclosure: Closed
Risk Category: II
EXP: C
Mean Height: 15.00 ft
TCDL: 5.0 psf
BCDL: 5.0 psf
MWFRS Parallel Dist: h/2 to h
C&C Dist a: 3.00 ft
Loc. from endwall: not in 9.00 ft
GCpi: 0.18
Wind Duration: 1.60

Snow Criteria (Pg,Pf in PSF)
Pg: NA Ct: NA CAT: NA
Pf: NA Ce: NA
Lu: NA Cs: NA
Snow Duration: NA

Code / Misc Criteria
Bldg Code: FBC 2017 RES
TPI Std: 2014
Rep Factors Used: Yes
FT/RT:20(0)/10(0)
Plate Type(s):
WAVE

Defl/CSI Criteria

PP Deflection in	loc	L/defl	L/#
VERT(LL): 0.035	K	999	240
VERT(TL): 0.112	K	999	180
HORZ(LL): 0.020	G	-	-
HORZ(TL): 0.041	G	-	-

Creep Factor: 2.0
Max TC CSI: 0.743
Max BC CSI: 0.445
Max Web CSI: 0.405

VIEW Ver: 17.02.00.1013.16

▲ Maximum Reactions (lbs)

Loc	R	/ U	/ Rw	/ Rh	/ RL	/ W
M	1251	/ 195	/ 768	/ -	/ 193	/ 3.5
G	1251	/ 195	/ 768	/ -	/ -	/ 3.5

Wind reactions based on MWFRS
M Min Brg Width Req = 1.5
G Min Brg Width Req = 1.5
Bearings M & G are a rigid surface.

Members not listed have forces less than 375#

Maximum Top Chord Forces Per Ply (lbs)

Chords	Tens.	Comp.	Chords	Tens.	Comp.
B - C	331	- 1112	D - E	330	- 1109
C - D	329	- 863			

Maximum Bot Chord Forces Per Ply (lbs)

Chords	Tens.	Comp.	Chords	Tens.	Comp.
M - L	1003	- 183	J - I	862	- 90
L - K	1005	- 183	I - H	1006	- 183
K - J	862	- 90	H - G	1004	- 184

Maximum Web Forces Per Ply (lbs)

Webs	Tens.	Comp.	Webs	Tens.	Comp.
M - B	386	- 1599	E - G	386	- 1600

Lumber

Top chord 2x4 SP #2
Bot chord 2x4 SP #2
Webs 2x4 SP #3

Bracing

(a) Continuous lateral restraint equally spaced on member.

Purlins

In lieu of structural panels use purlins to brace all flat TC @ 24" oc.

Wind

Wind loads based on MWFRS with additional C&C member design.

Left and right cantilevers are exposed to wind

Additional Notes

The overall height of this truss excluding overhang is 8-1-10.

WILLIAM H. KRICK
LICENSE
No. 70861
STATE OF
FLORIDA
PROFESSIONAL ENGINEER

COA #0278

05/24/2018

****WARNING**** READ AND FOLLOW ALL NOTES ON THIS DRAWING!
****IMPORTANT**** FURNISH THIS DRAWING TO ALL CONTRACTORS INCLUDING THE INSTALLERS

Trusses require extreme care in fabricating, handling, shipping, installing and bracing. Refer to and follow the latest edition of BCSI (Building Component Safety Information, by TPI and SBCA) for safety practices prior to performing these functions. Installers shall provide temporary bracing per BCSI. Unless noted otherwise,top chord shall have properly attached structural sheathing and bottom chord shall have a properly attached rigid ceiling. Locations shown for permanent lateral restraint of webs shall have bracing installed per BCSI sections B3, B7, or B10, as applicable. Apply plates to each face of truss and position as shown above and on the Joint Details, unless noted otherwise. Refer to drawings 160A-Z for standard plate positions.

Alpine, a division of ITW Building Components Group Inc. shall not be responsible for any deviation from this drawing,any failure to build the truss in conformance with ANSI/TPI 1, or for handling, shipping, installation and bracing of trusses**A seal on this drawing or cover page listing this drawing, indicates acceptance of professional engineering responsibility solely for the design shown. The suitability and use of this drawing for any structure is the responsibility of the Building Designer per ANSI/TPI 1 Sec.2.**

For more information see this job's general notes page and these web sites: ALPINE: www.alpineitw.com; TPI: www.tpinst.org; SBCA: www.sbcindustry.com; ICC: www.iccsafe.org

ALPINE
AN ITW COMPANY
6750 Forum Drive
Suite 305
Orlando FL, 32821

Job Number: 18-2262 FREEMAN **Truss Label:** D04	Ply: 1 Qty: 1	SEQN: 556444 / T79 HIPS FROM: CDM	Cust: R215 JRef: 1Wb72150004 DrwNo: 144.18.0743.54877 KM / BAF 05/24/2018

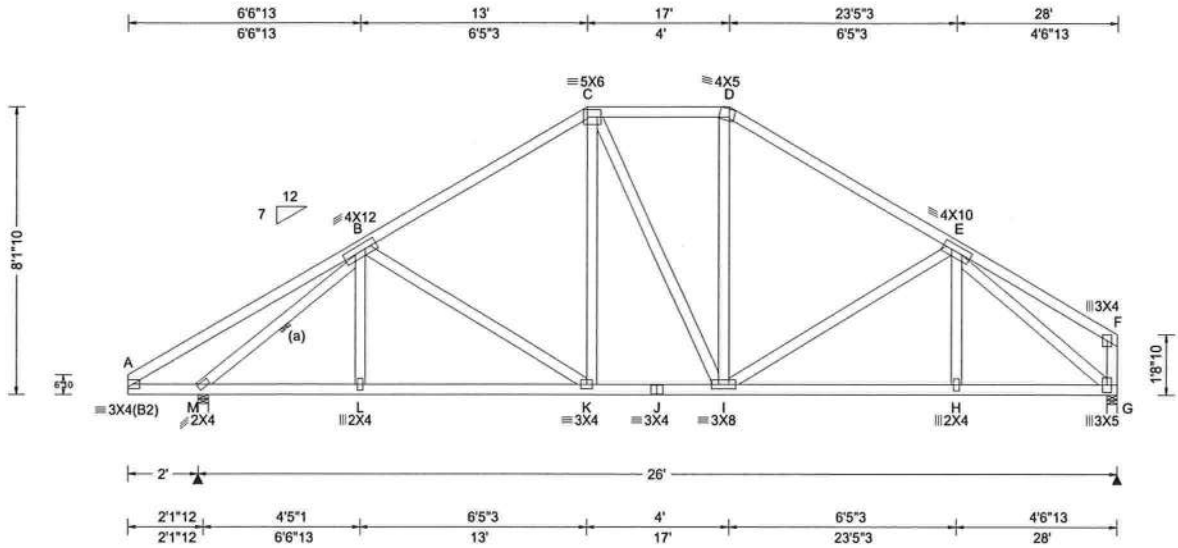

Loading Criteria (psf)

TCLL: 20.00
TCDL: 10.00
BCLL: 0.00
BCDL: 10.00
Des Ld: 40.00
NCBCLL: 10.00
Soffit: 2.00
Load Duration: 1.25
Spacing: 24.0 "

Wind Criteria

Wind Std: ASCE 7-10
Speed: 130 mph
Enclosure: Closed
Risk Category: II
EXP: C
Mean Height: 15.00 ft
TCDL: 5.0 psf
BCDL: 5.0 psf
MWFRS Parallel Dist: h to 2h
C&C Dist a: 3.00 ft
Loc. from endwall: not in 9.00 ft
GCpi: 0.18
Wind Duration: 1.60

Snow Criteria (Pg,Pf in PSF)

Pg: NA Ct: NA CAT: NA
Pf: NA Ce: NA
Lu: NA Cs: NA
Snow Duration: NA

Code / Misc Criteria

Bldg Code: FBC 2017 RES
TPI Std: 2014
Rep Factors Used: Yes
FT/RT:20(0)/10(0)
Plate Type(s):
WAVE

Defl/CSI Criteria

PP Deflection in	loc	L/defl	L/#
VERT(LL): 0.036	K	999	240
VERT(TL): 0.114	K	999	180
HORZ(LL): 0.021	F	-	-
HORZ(TL): 0.045	F	-	-

Creep Factor: 2.0
Max TC CSI: 0.744
Max BC CSI: 0.492
Max Web CSI: 0.880

VIEW Ver: 17.02.00.1013.16

▲ Maximum Reactions (lbs)

Loc	R	/ U	/ Rw	/ Rh	/ RL	/ W
M	1261	/ 26	/ 774	/ -	/ 186	/ 3.5
G	1071	/ 32	/ 608	/ -	/ -	/ 3.5

Wind reactions based on MWFRS
M Min Brg Width Req = 1.5
G Min Brg Width Req = 1.5
Bearings M & G are a rigid surface.

Members not listed have forces less than 375#

Maximum Top Chord Forces Per Ply (lbs)

Chords	Tens.	Comp.	Chords	Tens.	Comp.
B - C	336	-1133	D - E	340	-1133
C - D	332	-888			

Maximum Bot Chord Forces Per Ply (lbs)

Chords	Tens.	Comp.	Chords	Tens.	Comp.
M - L	1018	-224	J - I	880	-132
L - K	1020	-224	I - H	1052	-217
K - J	880	-132	H - G	1050	-217

Maximum Web Forces Per Ply (lbs)

Webs	Tens.	Comp.	Webs	Tens.	Comp.
M - B	386	-1613	E - G	284	-1387

Lumber

Top chord 2x4 SP #2
Bot chord 2x4 SP #2
Webs 2x4 SP #3

Bracing

(a) Continuous lateral restraint equally spaced on member.

Purlins

In lieu of structural panels use purlins to brace all flat TC @ 24" oc.

Wind

Wind loads based on MWFRS with additional C&C member design.

Left cantilever is exposed to wind

Additional Notes

The overall height of this truss excluding overhang is 8-1-10.

WILLIAM H. KRICK
LICENSE
No. 70861
STATE OF FLORIDA
PROFESSIONAL ENGINEER

COA #0278

05/24/2018

****WARNING**** READ AND FOLLOW ALL NOTES ON THIS DRAWING!
****IMPORTANT**** FURNISH THIS DRAWING TO ALL CONTRACTORS INCLUDING THE INSTALLERS

Trusses require extreme care in fabricating, handling, shipping, installing and bracing. Refer to and follow the latest edition of BCSI (Building Component Safety Information, by TPI and SBCA) for safety practices prior to performing these functions. Installers shall provide temporary bracing per BCSI. Unless noted otherwise,top chord shall have properly attached structural sheathing and bottom chord shall have a properly attached rigid ceiling. Locations shown for permanent lateral restraint of webs shall have bracing installed per BCSI sections B3, B7, or B10, as applicable. Apply plates to each face of truss and position as shown above and on the Joint Details, unless noted otherwise. Refer to drawings 160A-Z for standard plate positions.

Alpine, a division of ITW Building Components Group Inc. shall not be responsible for any deviation from this drawing,any failure to build the truss in conformance with ANSI/TPI 1, or for handling, shipping, installation and bracing of trusses**A seal on this drawing or cover page listing this drawing, indicates acceptance of professional engineering responsibility solely for the design shown. The suitability and use of this drawing for any structure is the responsibility of the Building Designer per ANSI/TPI 1 Sec.2.**

For more information see this job's general notes page and these web sites: ALPINE: www.alpineitw.com; TPI: www.tpinst.org; SBCA: www.sbcindustry.com; ICC: www.iccsafe.org

ALPINE™ AN ITW COMPANY
6750 Forum Drive
Suite 305
Orlando FL, 32821

Job Number: 18-2262 FREEMAN **Truss Label:** D05	Ply: 1 Qty: 1	SEQN: 556004 / T67 HIPS FROM: CDM	Cust: R215 JRef: 1Wb72150004 DrwNo: 144.18.0743.56310 KM / BAF 05/24/2018

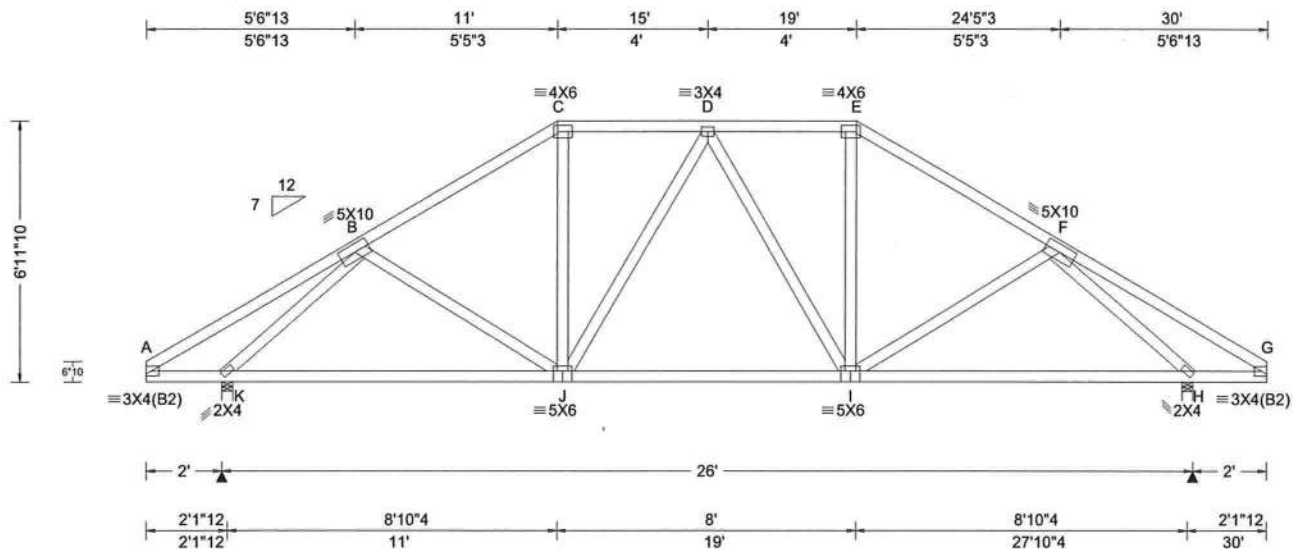

Loading Criteria (psf)

TCLL: 20.00
TCDL: 10.00
BCLL: 0.00
BCDL: 10.00
Des Ld: 40.00
NCBCLL: 10.00
Soffit: 2.00
Load Duration: 1.25
Spacing: 24.0 "

Wind Criteria

Wind Std: ASE 7-10
Speed: 130 mph
Enclosure: Closed
Risk Category: II
EXP: C
Mean Height: 15.00 ft
TCDL: 5.0 psf
BCDL: 5.0 psf
MWFRS Parallel Dist: h/2 to h
C&C Dist a: 3.00 ft
Loc. from endwall: not in 9.00 ft
GCpi: 0.18
Wind Duration: 1.60

Snow Criteria (Pg,Pf in PSF)

Pg: NA Ct: NA CAT: NA
Pf: NA Ce: NA
Lu: NA Cs: NA
Snow Duration: NA

Code / Misc Criteria

Bldg Code: FBC 2017 RES
TPI Std: 2014
Rep Factors Used: Yes
FT/RT:20(0)/10(0)
Plate Type(s):
WAVE

Defl/CSI Criteria

PP Deflection in	loc	L/defl	L/#
VERT(LL): 0.035	D	999	240
VERT(TL): 0.111	D	999	180
HORZ(LL): 0.019	H	-	-
HORZ(TL): 0.039	H	-	-

Creep Factor: 2.0
Max TC CSI: 0.521
Max BC CSI: 0.740
Max Web CSI: 0.750

VIEW Ver: 17.02.00.1013.16

▲ Maximum Reactions (lbs)

Loc	R	/ U	/ Rw	/ Rh	/ RL	/ W
K	1251	/ 198	/ 765	/ -	/ 163	/ 3.5
H	1251	/ 198	/ 765	/ -	/ -	/ 3.5

Wind reactions based on MWFRS
K Min Brg Width Req = 1.5
H Min Brg Width Req = 1.5
Bearings K & H are a rigid surface.

Members not listed have forces less than 375#

Maximum Top Chord Forces Per Ply (lbs)

Chords	Tens.	Comp.	Chords	Tens.	Comp.
B - C	341	- 1186	D - E	335	- 948
C - D	335	- 948	E - F	341	- 1186

Maximum Bot Chord Forces Per Ply (lbs)

Chords	Tens.	Comp.	Chords	Tens.	Comp.
K - J	903	- 193	I - H	903	- 193
J - I	1011	- 152			

Maximum Web Forces Per Ply (lbs)

Webs	Tens.	Comp.	Webs	Tens.	Comp.
K - B	429	- 1442	F - H	429	- 1442

Lumber

Top chord 2x4 SP #2
Bot chord 2x4 SP #2
Webs 2x4 SP #3

Purlins

In lieu of structural panels use purlins to brace all flat TC @ 24" oc.

Wind

Wind loads based on MWFRS with additional C&C member design.

Left and right cantilevers are exposed to wind

Additional Notes

The overall height of this truss excluding overhang is 6-11-10.

WILLIAM H. KRICK
LICENSE
No. 70861
STATE OF FLORIDA
PROFESSIONAL ENGINEER

COA #0,278

05/24/2018

****WARNING**** READ AND FOLLOW ALL NOTES ON THIS DRAWING!
****IMPORTANT**** FURNISH THIS DRAWING TO ALL CONTRACTORS INCLUDING THE INSTALLERS

Trusses require extreme care in fabricating, handling, shipping, installing and bracing. Refer to and follow the latest edition of BCSI (Building Component Safety Information, by TPI and SBCA) for safety practices prior to performing these functions. Installers shall provide temporary bracing per BCSI. Unless noted otherwise,top chord shall have properly attached structural sheathing and bottom chord shall have a properly attached rigid ceiling. Locations shown for permanent lateral restraint of webs shall have bracing installed per BCSI sections B3, B7, or B10, as applicable. Apply plates to each face of truss and position as shown above and on the Joint Details, unless noted otherwise. Refer to drawings 160A-Z for standard plate positions.

Alpine, a division of ITW Building Components Group Inc. shall not be responsible for any deviation from this drawing,any failure to build the truss in conformance with ANSI/TPI 1, or for handling, shipping, installation and bracing of trusses**A seal on this drawing or cover page listing this drawing, indicates acceptance of professional engineering responsibility solely for the design shown. The suitability and use of this drawing for any structure is the responsibility of the Building Designer per ANSI/TPI 1 Sec.2.**

For more information see this job's general notes page and these web sites: ALPINE: www.alpineitw.com; TPI: www.tpinst.org; SBCA: www.sbcindustry.com; ICC: www.iccsafe.org

ALPINE™ AN ITW COMPANY
6750 Forum Drive
Suite 305
Orlando FL, 32821

Job Number: 18-2262 FREEMAN **Truss Label:** D06	Ply: 1 Qty: 1	SEQN: 556446 / T78 HIPS FROM: CDM	Cust: R215 JRef: 1Wb72150004 DrwNo: 144.18.0743.58073 KM / BAF 05/24/2018

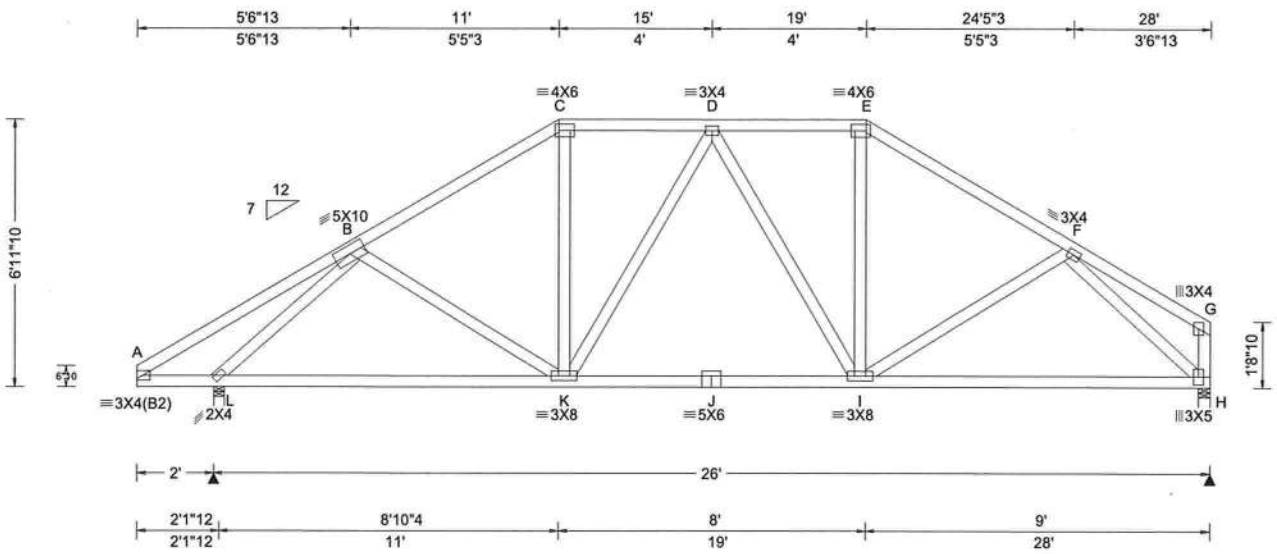

Loading Criteria (psf)	**Wind Criteria**	**Snow Criteria** (Pg,Pf in PSF)	**Defl/CSI Criteria**
TCLL: 20.00 TCDL: 10.00 BCLL: 0.00 BCDL: 10.00 Des Ld: 40.00 NCBCLL: 10.00 Soffit: 2.00 Load Duration: 1.25 Spacing: 24.0 "	Wind Std: ASCE 7-10 Speed: 130 mph Enclosure: Closed Risk Category: II EXP: C Mean Height: 15.00 ft TCDL: 5.0 psf BCDL: 5.0 psf MWFRS Parallel Dist: h to 2h C&C Dist a: 3.00 ft Loc. from endwall: not in 9.00 ft GCpi: 0.18 Wind Duration: 1.60	Pg: NA Ct: NA CAT: NA Pf: NA Ce: NA Lu: NA Cs: NA Snow Duration: NA **Code / Misc Criteria** Bldg Code: FBC 2017 RES TPI Std: 2014 Rep Factors Used: Yes FT/RT:20(0)/10(0) Plate Type(s): WAVE	PP Deflection in loc L/defl L/# VERT(LL): 0.036 D 999 240 VERT(TL): 0.114 D 999 180 HORZ(LL): 0.019 H - - HORZ(TL): 0.041 H - - Creep Factor: 2.0 Max TC CSI: 0.520 Max BC CSI: 0.893 Max Web CSI: 0.756 VIEW Ver: 17.02.00.1013.16

▲ Maximum Reactions (lbs)

Loc	R	/ U	/ Rw	/ Rh	/ RL	/ W
L	1261	/ 63	/ 771	/ -	/ 156	/ 3.5
H	1071	/ 68	/ 605	/ -	/ -	/ 3.5

Wind reactions based on MWFRS
L Min Brg Width Req = 1.5
H Min Brg Width Req = 1.5
Bearings L & H are a rigid surface.

Members not listed have forces less than 375#

Maximum Top Chord Forces Per Ply (lbs)

Chords	Tens.	Comp.	Chords	Tens.	Comp.
B - C	348	- 1206	D - E	340	- 984
C - D	342	- 966	E - F	353	- 1223

Maximum Bot Chord Forces Per Ply (lbs)

Chords	Tens.	Comp.	Chords	Tens.	Comp.
L - K	916	- 233	J - I	1039	- 197
K - J	1039	- 197	I - H	943	- 229

Maximum Web Forces Per Ply (lbs)

Webs	Tens.	Comp.	Webs	Tens.	Comp.
L - B	430	- 1453	F - H	322	- 1279

Lumber

Top chord 2x4 SP #2
Bot chord 2x4 SP #2
Webs 2x4 SP #3

Purlins

In lieu of structural panels use purlins to brace all flat TC @ 24" oc.

Wind

Wind loads based on MWFRS with additional C&C member design.

Left cantilever is exposed to wind

Additional Notes

The overall height of this truss excluding overhang is 6-11-10.

WILLIAM H. KRICK
LICENSE
No. 70861
STATE OF FLORIDA
PROFESSIONAL ENGINEER

COA #0278

05/24/2018

****WARNING**** READ AND FOLLOW ALL NOTES ON THIS DRAWING!
****IMPORTANT**** FURNISH THIS DRAWING TO ALL CONTRACTORS INCLUDING THE INSTALLERS

Trusses require extreme care in fabricating, handling, shipping, installing and bracing. Refer to and follow the latest edition of BCSI (Building Component Safety Information, by TPI and SBCA) for safety practices prior to performing these functions. Installers shall provide temporary bracing per BCSI. Unless noted otherwise,top chord shall have properly attached structural sheathing and bottom chord shall have a properly attached rigid ceiling. Locations shown for permanent lateral restraint of webs shall have bracing installed per BCSI sections B3, B7, or B10, as applicable. Apply plates to each face of truss and position as shown above and on the Joint Details, unless noted otherwise. Refer to drawings 160A-Z for standard plate positions.

Alpine, a division of ITW Building Components Group Inc. shall not be responsible for any deviation from this drawing,any failure to build the truss in conformance with ANSI/TPI 1, or for handling, shipping, installation and bracing of trusses**A seal on this drawing or cover page listing this drawing, indicates acceptance of professional engineering responsibility solely for the design shown. The suitability and use of this drawing for any structure is the responsibility of the Building Designer per ANSI/TPI 1 Sec.2.**

For more information see this job's general notes page and these web sites: ALPINE: www.alpineitw.com; TPI: www.tpinst.org; SBCA: www.sbcindustry.com; ICC: www.iccsafe.org

ALPINE
AN ITW COMPANY
6750 Forum Drive
Suite 305
Orlando FL, 32821

Job Number: 18-2262 FREEMAN **Truss Label:** D07	Ply: 1 Qty: 1	SEQN: 556448 / T66 HIPS FROM: CDM	Cust: R215 JRef: 1Wb72150004 DrwNo: 144.18.0743.59650 KM / BAF 05/24/2018

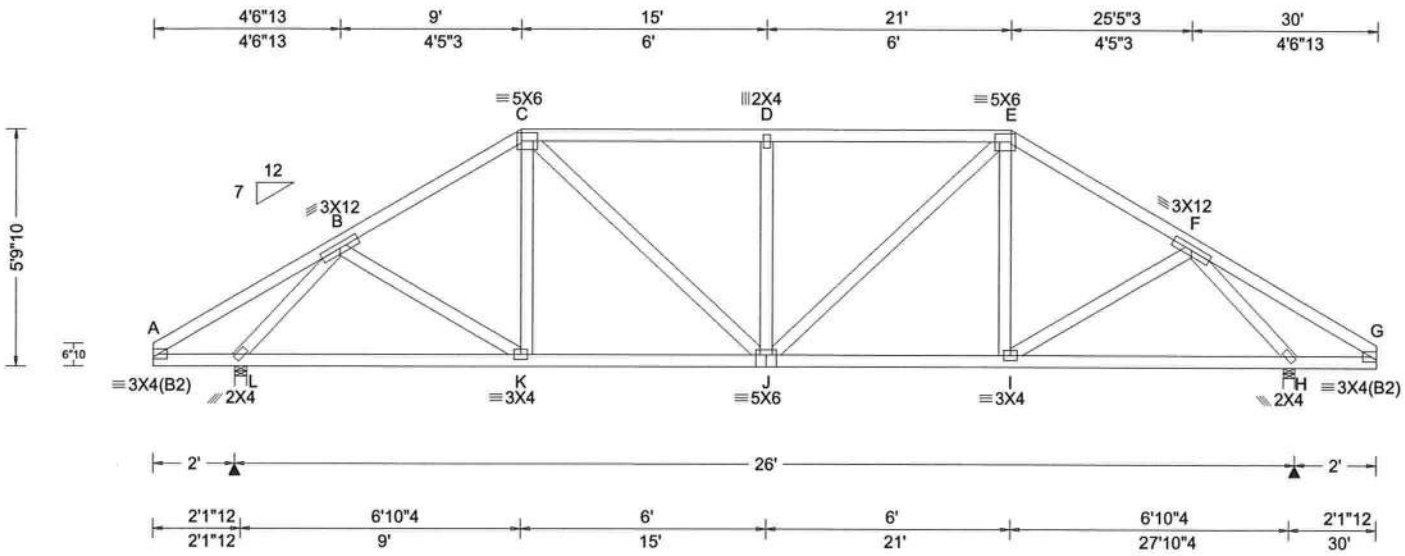

Loading Criteria (psf)

TCLL: 20.00
TCDL: 10.00
BCLL: 0.00
BCDL: 10.00
Des Ld: 40.00
NCBCLL: 10.00
Soffit: 2.00
Load Duration: 1.25
Spacing: 24.0 "

Wind Criteria

Wind Std: ASCE 7-10
Speed: 130 mph
Enclosure: Closed
Risk Category: II
EXP: C
Mean Height: 15.00 ft
TCDL: 5.0 psf
BCDL: 5.0 psf
MWFRS Parallel Dist: h/2 to h
C&C Dist a: 3.00 ft
Loc. from endwall: not in 9.00 ft
GCpi: 0.18
Wind Duration: 1.60

Snow Criteria (Pg,Pf in PSF)

Pg: NA Ct: NA CAT: NA
Pf: NA Ce: NA
Lu: NA Cs: NA
Snow Duration: NA

Code / Misc Criteria

Bldg Code: FBC 2017 RES
TPI Std: 2014
Rep Factors Used: Yes
FT/RT:20(0)/10(0)
Plate Type(s):
WAVE

Defl/CSI Criteria

PP Deflection in	loc	L/defl	L/#
VERT(LL): 0.042	D	999	240
VERT(TL): 0.134	D	999	180
HORZ(LL): 0.017	H	-	-
HORZ(TL): 0.037	H	-	-

Creep Factor: 2.0
Max TC CSI: 0.456
Max BC CSI: 0.531
Max Web CSI: 0.451

VIEW Ver: 17.02.00.1013.16

▲ Maximum Reactions (lbs)

Loc	R	/ U	/ Rw	/ Rh	/ RL	/ W
L	1251	/ 201	/ 757	/ -	/ 134	/ 3.5
H	1251	/ 201	/ 757	/ -	/ -	/ 3.5

Wind reactions based on MWFRS
L Min Brg Width Req = 1.5
H Min Brg Width Req = 1.5
Bearings L & H are a rigid surface.

Members not listed have forces less than 375#

Maximum Top Chord Forces Per Ply (lbs)

Chords	Tens.	Comp.	Chords	Tens.	Comp.
B - C	349	- 1216	D - E	407	- 1268
C - D	407	- 1268	E - F	349	- 1216

Maximum Bot Chord Forces Per Ply (lbs)

Chords	Tens.	Comp.	Chords	Tens.	Comp.
L - K	783	- 177	J - I	989	- 168
K - J	989	- 167	I - H	783	- 178

Maximum Web Forces Per Ply (lbs)

Webs	Tens.	Comp.	Webs	Tens.	Comp.
L - B	410	- 1414	J - E	389	- 110
C - J	389	- 110	F - H	410	- 1414
D - J	158	- 406			

Lumber

Top chord 2x4 SP #2
Bot chord 2x4 SP #2
Webs 2x4 SP #3

Purlins

In lieu of structural panels use purlins to brace all flat TC @ 24" oc.

Wind

Wind loads based on MWFRS with additional C&C member design.

Left and right cantilevers are exposed to wind

Additional Notes

The overall height of this truss excluding overhang is 5-9-10.

WILLIAM H. KRICK
LICENSE
No. 70861
STATE OF FLORIDA
PROFESSIONAL ENGINEER

COA #0278

05/24/2018

****WARNING**** READ AND FOLLOW ALL NOTES ON THIS DRAWING!
****IMPORTANT**** FURNISH THIS DRAWING TO ALL CONTRACTORS INCLUDING THE INSTALLERS

Trusses require extreme care in fabricating, handling, shipping, installing and bracing. Refer to and follow the latest edition of BCSI (Building Component Safety Information, by TPI and SBCA) for safety practices prior to performing these functions. Installers shall provide temporary bracing per BCSI. Unless noted otherwise,top chord shall have properly attached structural sheathing and bottom chord shall have a properly attached rigid ceiling. Locations shown for permanent lateral restraint of webs shall have bracing installed per BCSI sections B3, B7, or B10, as applicable. Apply plates to each face of truss and position as shown above and on the Joint Details, unless noted otherwise. Refer to drawings 160A-Z for standard plate positions.

Alpine, a division of ITW Building Components Group Inc. shall not be responsible for any deviation from this drawing,any failure to build the truss in conformance with ANSI/TPI 1, or for handling, shipping, installation and bracing of trusses**A seal on this drawing or cover page listing this drawing, indicates acceptance of professional engineering responsibility solely for the design shown. The suitability and use of this drawing for any structure is the responsibility of the Building Designer per ANSI/TPI 1 Sec.2.**

For more information see this job's general notes page and these web sites: ALPINE: www.alpineitw.com; TPI: www.tpinst.org; SBCA: www.sbcindustry.com; ICC: www.iccsafe.org

ALPINE
AN ITW COMPANY
6750 Forum Drive
Suite 305
Orlando FL, 32821

Job Number: 18-2262 FREEMAN **Truss Label:** D08	Ply: 1 Qty: 1	SEQN: 556450 / T71 HIPS FROM: CDM	Cust: R215 JRef: 1Wb72150004 DrwNo: 144.18.0744.01317 KM / BAF 05/24/2018

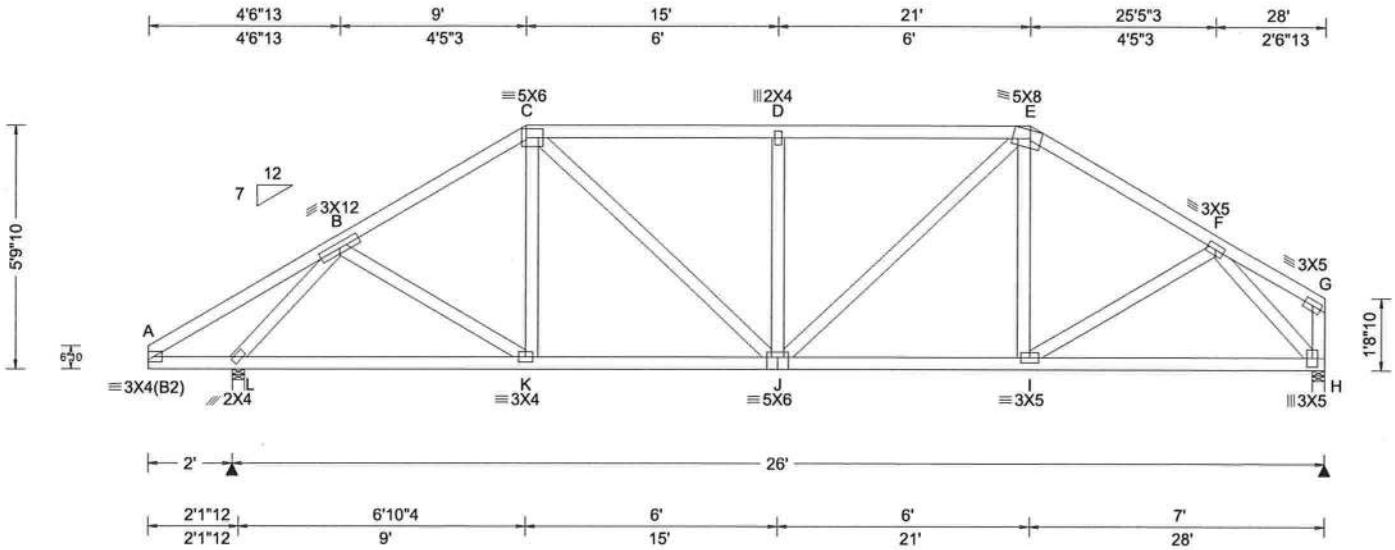

Loading Criteria (psf)
TCLL: 20.00
TCDL: 10.00
BCLL: 0.00
BCDL: 10.00
Des Ld: 40.00
NCBCLL: 10.00
Soffit: 2.00
Load Duration: 1.25
Spacing: 24.0 "

Wind Criteria
Wind Std: ASCE 7-10
Speed: 130 mph
Enclosure: Closed
Risk Category: II
EXP: C
Mean Height: 15.00 ft
TCDL: 5.0 psf
BCDL: 5.0 psf
MWFRS Parallel Dist: h to 2h
C&C Dist a: 3.00 ft
Loc. from endwall: not in 9.00 ft
GCpi: 0.18
Wind Duration: 1.60

Snow Criteria (Pg,Pf in PSF)
Pg: NA Ct: NA CAT: NA
Pf: NA Ce: NA
Lu: NA Cs: NA
Snow Duration: NA

Code / Misc Criteria
Bldg Code: FBC 2017 RES
TPI Std: 2014
Rep Factors Used: Yes
FT/RT:20(0)/10(0)
Plate Type(s):
WAVE

Defl/CSI Criteria

PP Deflection in	loc	L/defl	L/#
VERT(LL): 0.043	D	999	240
VERT(TL): 0.137	D	999	180
HORZ(LL): 0.018	H	-	-
HORZ(TL): 0.039	H	-	-

Creep Factor: 2.0
Max TC CSI: 0.453
Max BC CSI: 0.624
Max Web CSI: 0.455

VIEW Ver: 17.02.00.1013.16

▲ Maximum Reactions (lbs)

Loc	R	/ U	/ Rw	/ Rh	/ RL	/ W
L	1261	/ 97	/ 763	/ -	/ 126	/ 3.5
H	1071	/ 101	/ 597	/ -	/ -	/ 3.5

Wind reactions based on MWFRS
L Min Brg Width Req = 1.5
H Min Brg Width Req = 1.5
Bearings L & H are a rigid surface.

Members not listed have forces less than 375#

Maximum Top Chord Forces Per Ply (lbs)

Chords	Tens.	Comp.	Chords	Tens.	Comp.
B - C	356	-1235	D - E	419	-1298
C - D	419	-1298	E - F	364	-1261

Maximum Bot Chord Forces Per Ply (lbs)

Chords	Tens.	Comp.	Chords	Tens.	Comp.
L - K	794	-217	J - I	1032	-211
K - J	1006	-209	I - H	842	-215

Maximum Web Forces Per Ply (lbs)

Webs	Tens.	Comp.	Webs	Tens.	Comp.
L - B	410	-1428	D - J	157	-403
C - J	402	-110	F - H	327	-1256

Lumber

Top chord 2x4 SP #2
Bot chord 2x4 SP #2
Webs 2x4 SP #3

Purlins

In lieu of structural panels use purlins to brace all flat TC @ 24" oc.

Wind

Wind loads based on MWFRS with additional C&C member design.

Left cantilever is exposed to wind

Additional Notes

The overall height of this truss excluding overhang is 5-9-10.

WILLIAM H. KRICK
LICENSE
No. 70861
STATE OF FLORIDA
PROFESSIONAL ENGINEER

COA #0278

05/24/2018

****WARNING**** READ AND FOLLOW ALL NOTES ON THIS DRAWING!
****IMPORTANT**** FURNISH THIS DRAWING TO ALL CONTRACTORS INCLUDING THE INSTALLERS

Trusses require extreme care in fabricating, handling, shipping, installing and bracing. Refer to and follow the latest edition of BCSI (Building Component Safety Information, by TPI and SBCA) for safety practices prior to performing these functions. Installers shall provide temporary bracing per BCSI. Unless noted otherwise,top chord shall have properly attached structural sheathing and bottom chord shall have a properly attached rigid ceiling. Locations shown for permanent lateral restraint of webs shall have bracing installed per BCSI sections B3, B7, or B10, as applicable. Apply plates to each face of truss and position as shown above and on the Joint Details, unless noted otherwise. Refer to drawings 160A-Z for standard plate positions.

Alpine, a division of ITW Building Components Group Inc. shall not be responsible for any deviation from this drawing,any failure to build the truss in conformance with ANSI/TPI 1, or for handling, shipping, installation and bracing of trusses**A seal on this drawing or cover page listing this drawing, indicates acceptance of professional engineering responsibility solely for the design shown. The suitability and use of this drawing for any structure is the responsibility of the Building Designer per ANSI/TPI 1 Sec.2.**

For more information see this job's general notes page and these web sites: ALPINE: www.alpineitw.com; TPI: www.tpinst.org; SBCA: www.sbcindustry.com; ICC: www.iccsafe.org

ALPINE™ AN ITW COMPANY
6750 Forum Drive
Suite 305
Orlando FL, 32821

Job Number: 18-2262 FREEMAN **Truss Label:** D09	Ply: 1 Qty: 1	SEQN: 556507 / T70 HIPS FROM: CDM	Cust: R215 JRef: 1Wb72150004 DrwNo: 144.18.0744.02877 KM / BAF 05/24/2018

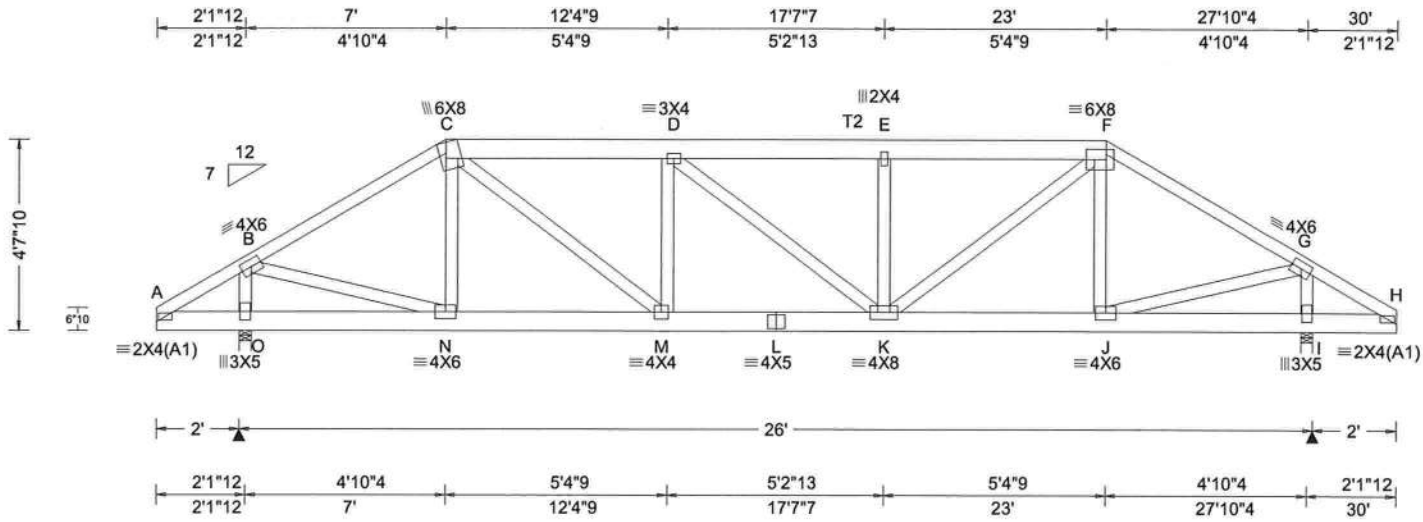

Loading Criteria (psf)
TCLL: 20.00
TCDL: 10.00
BCLL: 0.00
BCDL: 10.00
Des Ld: 40.00
NCBCLL: 10.00
Soffit: 2.00
Load Duration: 1.25
Spacing: 24.0 "

Wind Criteria
Wind Std: ASCE 7-10
Speed: 130 mph
Enclosure: Closed
Risk Category: II
EXP: C
Mean Height: 15.00 ft
TCDL: 5.0 psf
BCDL: 5.0 psf
MWFRS Parallel Dist: 0 to h/2
C&C Dist a: 3.00 ft
Loc. from endwall: NA
GCpi: 0.18
Wind Duration: 1.60

Snow Criteria (Pg,Pf in PSF)
Pg: NA Ct: NA CAT: NA
Pf: NA Ce: NA
Lu: NA Cs: NA
Snow Duration: NA

Code / Misc Criteria
Bldg Code: FBC 2017 RES
TPI Std: 2014
Rep Factors Used: Yes
FT/RT:20(0)/10(0)
Plate Type(s):
WAVE

Defl/CSI Criteria

PP Deflection in	loc	L/defl	L/#
VERT(LL): 0.081	E	999	240
VERT(TL): 0.252	E	999	180
HORZ(LL): 0.020	C	-	-
HORZ(TL): 0.042	C	-	-

Creep Factor: 2.0
Max TC CSI: 0.324
Max BC CSI: 0.583
Max Web CSI: 0.678

VIEW Ver: 17.02.00.1013.16

▲ Maximum Reactions (lbs)

Loc	R	/ U	/ Rw	/ Rh	/ RL	/ W
O	1962	/ 623	/ -	/ -	/ -	/ 3.5
I	1962	/ 623	/ -	/ -	/ -	/ 3.5

Wind reactions based on MWFRS
O Min Brg Width Req = 1.9
I Min Brg Width Req = 1.9
Bearings O & I are a rigid surface.

Members not listed have forces less than 375#

Maximum Top Chord Forces Per Ply (lbs)

Chords	Tens.	Comp.	Chords	Tens.	Comp.
B - C	764	-2183	E - F	1004	-2810
C - D	993	-2784	F - G	764	-2185
D - E	1004	-2808			

Maximum Bot Chord Forces Per Ply (lbs)

Chords	Tens.	Comp.	Chords	Tens.	Comp.
N - M	1828	-636	L - K	2819	-1011
M - L	2819	-1011	K - J	1829	-636

Maximum Web Forces Per Ply (lbs)

Webs	Tens.	Comp.	Webs	Tens.	Comp.
O - B	643	-1816	E - K	261	-513
B - N	1776	-617	K - F	1257	-466
C - M	1239	-457	J - G	1779	-617
M - D	265	-528	G - I	643	-1818

Lumber

Top chord 2x4 SP #2 :T2 2x6 SP #2:
Bot chord 2x6 SP #2
Webs 2x4 SP #3

Special Loads

------(Lumber Dur.Fac.=1.25 / Plate Dur.Fac.=1.25)
TC: From 63 plf at 0.00 to 63 plf at 7.00
TC: From 32 plf at 7.00 to 32 plf at 23.00
TC: From 63 plf at 23.00 to 63 plf at 30.00
BC: From 20 plf at 0.00 to 20 plf at 7.03
BC: From 10 plf at 7.03 to 10 plf at 22.97
BC: From 20 plf at 22.97 to 20 plf at 30.00
TC: 188 lb Conc. Load at 7.03,22.97
TC: 124 lb Conc. Load at 9.06,11.06,13.06,15.00 16.94,18.94,20.94
BC: 179 lb Conc. Load at 7.03,22.97
BC: 69 lb Conc. Load at 9.06,11.06,13.06,15.00 16.94,18.94,20.94

Purlins

In lieu of structural panels use purlins to brace all flat TC @ 24" oc.

Wind

Wind loads and reactions based on MWFRS.

Left and right cantilevers are exposed to wind

Additional Notes

The overall height of this truss excluding overhang is 4-7-10.

WILLIAM H. KRICK
LICENSE
No. 70861
STATE OF FLORIDA
PROFESSIONAL ENGINEER

COA #0 278
05/24/2018

****WARNING**** READ AND FOLLOW ALL NOTES ON THIS DRAWING!
****IMPORTANT**** FURNISH THIS DRAWING TO ALL CONTRACTORS INCLUDING THE INSTALLERS

Trusses require extreme care in fabricating, handling, shipping, installing and bracing. Refer to and follow the latest edition of BCSI (Building Component Safety Information, by TPI and SBCA) for safety practices prior to performing these functions. Installers shall provide temporary bracing per BCSI. Unless noted otherwise,top chord shall have properly attached structural sheathing and bottom chord shall have a properly attached rigid ceiling. Locations shown for permanent lateral restraint of webs shall have bracing installed per BCSI sections B3, B7, or B10, as applicable. Apply plates to each face of truss and position as shown above and on the Joint Details, unless noted otherwise. Refer to drawings 160A-Z for standard plate positions.

Alpine, a division of ITW Building Components Group Inc. shall not be responsible for any deviation from this drawing,any failure to build the truss in conformance with ANSI/TPI 1, or for handling, shipping, installation and bracing of trusses**A seal on this drawing or cover page listing this drawing, indicates acceptance of professional engineering responsibility solely for the design shown. The suitability and use of this drawing for any structure is the responsibility of the Building Designer per ANSI/TPI 1 Sec.2.**

For more information see this job's general notes page and these web sites: ALPINE: www.alpineitw.com; TPI: www.tpinst.org; SBCA: www.sbcindustry.com; ICC: www.iccsafe.org

ALPINE AN ITW COMPANY
6750 Forum Drive
Suite 305
Orlando FL, 32821

Job Number: 18-2262 FREEMAN **Truss Label:** D10	Ply: 1 Qty: 1	SEQN: 556505 / T82 HIPM FROM: CDM	Cust: R215 JRef: 1Wb72150004 DrwNo: 144.18.0744.04303 KM / BAF 05/24/2018

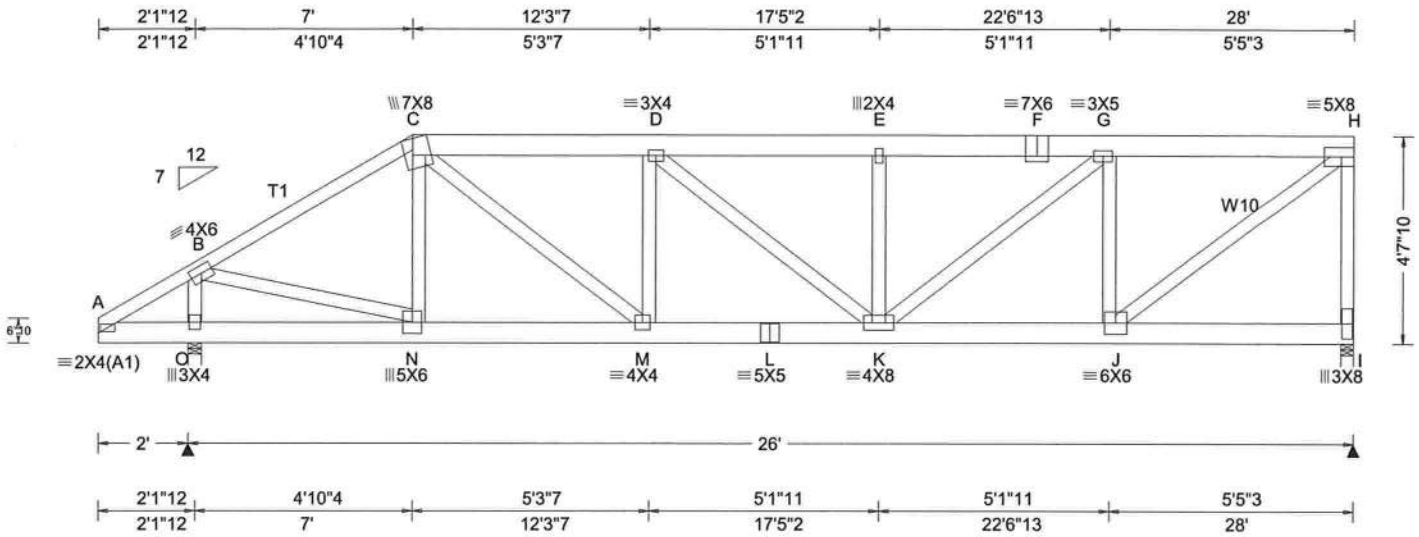

Loading Criteria (psf)

TCLL: 20.00
TCDL: 10.00
BCLL: 0.00
BCDL: 10.00
Des Ld: 40.00
NCBCLL: 10.00
Soffit: 2.00
Load Duration: 1.25
Spacing: 24.0 "

Wind Criteria

Wind Std: ASCE 7-10
Speed: 130 mph
Enclosure: Closed
Risk Category: II
EXP: C
Mean Height: 15.00 ft
TCDL: 5.0 psf
BCDL: 5.0 psf
MWFRS Parallel Dist: 0 to h/2
C&C Dist a: 3.00 ft
Loc. from endwall: NA
GCpi: 0.18
Wind Duration: 1.60

Snow Criteria (Pg,Pf in PSF)

Pg: NA Ct: NA CAT: NA
Pf: NA Ce: NA
Lu: NA Cs: NA
Snow Duration: NA

Code / Misc Criteria

Bldg Code: FBC 2017 RES
TPI Std: 2014
Rep Factors Used: Yes
FT/RT:20(0)/10(0)
Plate Type(s):
WAVE

Defl/CSI Criteria

PP Deflection in	loc	L/defl	L/#
VERT(LL): 0.101	E	999	240
VERT(TL): 0.311	E	999	180
HORZ(LL): 0.025	C	-	-
HORZ(TL): 0.052	C	-	-

Creep Factor: 2.0
Max TC CSI: 0.423
Max BC CSI: 0.674
Max Web CSI: 0.725

VIEW Ver: 17.02.00.1013.16

▲ Maximum Reactions (lbs)

Loc	R	/ U	/ Rw	/ Rh	/ RL	/ W
O	2080	/ 540	/ -	/ -	/ -	/ 3.5
I	2159	/ 435	/ -	/ -	/ -	/ 3.5

Wind reactions based on MWFRS
O Min Brg Width Req = 2.1
I Min Brg Width Req = 2.5
Bearings O & I are a rigid surface.

Members not listed have forces less than 375#

Maximum Top Chord Forces Per Ply (lbs)

Chords	Tens.	Comp.	Chords	Tens.	Comp.
B - C	654	-2342	E - F	723	-3222
C - D	790	-3068	F - G	723	-3222
D - E	723	-3222	G - H	467	-2250

Maximum Bot Chord Forces Per Ply (lbs)

Chords	Tens.	Comp.	Chords	Tens.	Comp.
N - M	1965	-541	L - K	3111	-802
M - L	3111	-802	K - J	2348	-494

Maximum Web Forces Per Ply (lbs)

Webs	Tens.	Comp.	Webs	Tens.	Comp.
O - B	563	-1927	K - G	1138	-299
B - N	1902	-525	G - J	378	-1406
C - M	1431	-320	J - H	2868	-596
M - D	186	-643	H - I	436	-2025
E - K	134	-506			

Lumber

Top chord 2x6 SP #2 :T1 2x4 SP #2:
Bot chord 2x6 SP #2
Webs 2x4 SP #3 :W10 2x4 SP #2:

Special Loads

------(Lumber Dur.Fac.=1.25 / Plate Dur.Fac.=1.25)
TC: From 63 plf at 0.00 to 63 plf at 7.00
TC: From 32 plf at 7.00 to 32 plf at 28.00
BC: From 20 plf at 0.00 to 20 plf at 7.03
BC: From 10 plf at 7.03 to 10 plf at 28.00
TC: 188 lb Conc. Load at 7.03
TC: 124 lb Conc. Load at 9.06,11.06,13.06
TC: 156 lb Conc. Load at 15.06,17.06,19.06,21.06 22.94,24.94,26.94
BC: 179 lb Conc. Load at 7.03
BC: 69 lb Conc. Load at 9.06,11.06,13.06
BC: 106 lb Conc. Load at 15.06,17.06,19.06,21.06 22.94,24.94,26.94

Purlins

In lieu of structural panels use purlins to brace all flat TC @ 24" oc.

Wind

Wind loads and reactions based on MWFRS.

Right end vertical not exposed to wind pressure.

Left cantilever is exposed to wind

Additional Notes

The overall height of this truss excluding overhang is 4-7-10.

WILLIAM H. KRICK
LICENSE
No. 70861
STATE OF FLORIDA
PROFESSIONAL ENGINEER

COA #0 278
05/24/2018

****WARNING**** READ AND FOLLOW ALL NOTES ON THIS DRAWING!
****IMPORTANT**** FURNISH THIS DRAWING TO ALL CONTRACTORS INCLUDING THE INSTALLERS

Trusses require extreme care in fabricating, handling, shipping, installing and bracing. Refer to and follow the latest edition of BCSI (Building Component Safety Information, by TPI and SBCA) for safety practices prior to performing these functions. Installers shall provide temporary bracing per BCSI. Unless noted otherwise,top chord shall have properly attached structural sheathing and bottom chord shall have a properly attached rigid ceiling. Locations shown for permanent lateral restraint of webs shall have bracing installed per BCSI sections B3, B7, or B10, as applicable. Apply plates to each face of truss and position as shown above and on the Joint Details, unless noted otherwise. Refer to drawings 160A-Z for standard plate positions.

Alpine, a division of ITW Building Components Group Inc. shall not be responsible for any deviation from this drawing,any failure to build the truss in conformance with ANSI/TPI 1, or for handling, shipping, installation and bracing of trusses**A seal on this drawing or cover page listing this drawing, indicates acceptance of professional engineering responsibility solely for the design shown. The suitability and use of this drawing for any structure is the responsibility of the Building Designer per ANSI/TPI 1 Sec.2.**

For more information see this job's general notes page and these web sites: ALPINE: www.alpineitw.com; TPI: www.tpinst.org; SBCA: www.sbcindustry.com; ICC: www.iccsafe.org

ALPINE
AN ITW COMPANY
6750 Forum Drive
Suite 305
Orlando FL, 32821

Job Number: 18-2262 FREEMAN **Truss Label:** G01	Ply: 1 Qty: 1	SEQN: 556470 / T90 HIPM FROM: CDM	Cust: R215 JRef: 1Wb72150004 DrwNo: 144.18.0744.05917 KM / BAF 05/24/2018

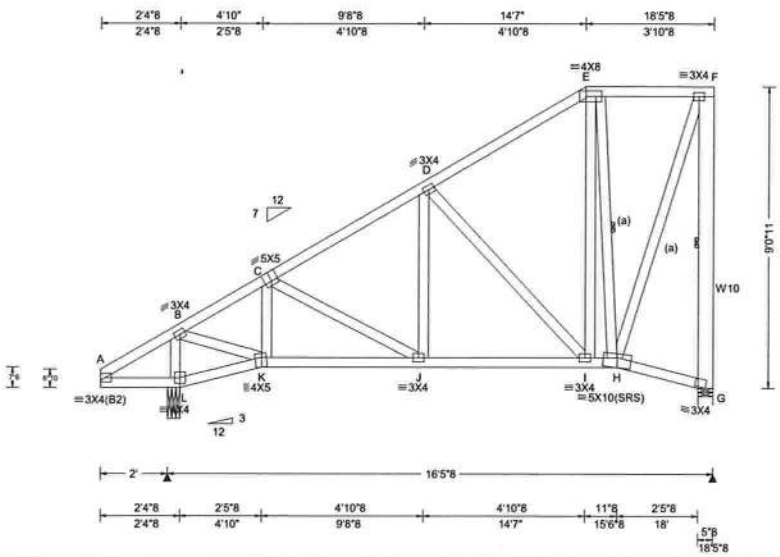

Loading Criteria (psf)

TCLL:	20.00
TCDL:	10.00
BCLL:	0.00
BCDL:	10.00
Des Ld:	40.00
NCBCLL:	10.00
Soffit:	2.00

Load Duration: 1.25
Spacing: 24.0 "

Wind Criteria
Wind Std: ASCE 7-10
Speed: 130 mph
Enclosure: Closed
Risk Category: II
EXP: C
Mean Height: 15.00 ft
TCDL: 5.0 psf
BCDL: 5.0 psf
MWFRS Parallel Dist: h/2 to h
C&C Dist a: 3.00 ft
Loc. from endwall: not in 9.00 ft
GCpi: 0.18
Wind Duration: 1.60

Snow Criteria (Pg,Pf in PSF)
Pg: NA Ct: NA CAT: NA
Pf: NA Ce: NA
Lu: NA Cs: NA
Snow Duration: NA

Code / Misc Criteria
Bldg Code: FBC 2017 RES
TPI Std: 2014
Rep Factors Used: Yes
FT/RT:20(0)/10(0)
Plate Type(s):
WAVE

Defl/CSI Criteria

PP Deflection in	loc	L/defl	L/#
VERT(LL): 0.016	J	999	240
VERT(TL): 0.053	J	999	180
HORZ(LL): 0.008	G	-	-
HORZ(TL): 0.018	G	-	-

Creep Factor: 2.0
Max TC CSI: 0.255
Max BC CSI: 0.325
Max Web CSI: 0.409

VIEW Ver: 17.02.00.1013.16

▲ Maximum Reactions (lbs)

Loc	R	/ U	/ Rw	/ Rh	/ RL	/ W
L	882	/ 61	/ 616	/ -	/ 243	/ 4.5
G	654	/ 184	/ 393	/ -	/ -	/ 5.5

Wind reactions based on MWFRS
L Min Brg Width Req = 1.5
G Min Brg Width Req = 5.5
Bearings L & G are a rigid surface.

Members not listed have forces less than 375#

Maximum Top Chord Forces Per Ply (lbs)

Chords	Tens.	Comp.	Chords	Tens.	Comp.
B - C	150	-677	C - D	105	-679

Maximum Bot Chord Forces Per Ply (lbs)

Chords	Tens.	Comp.	Chords	Tens.	Comp.
K - J	573	-324	J - I	521	-214

Maximum Web Forces Per Ply (lbs)

Webs	Tens.	Comp.	Webs	Tens.	Comp.
B - L	180	-780	E - H	200	-480
B - K	706	-100	H - F	576	-224
D - I	179	-405	F - G	257	-640

Lumber

Top chord 2x4 SP #2
Bot chord 2x4 SP #2
Webs 2x4 SP #3 :W10 2x6 SP #2:

Bracing

(a) Continuous lateral restraint equally spaced on member.

Purlins

In lieu of structural panels use purlins to brace all flat TC @ 24" oc.

Wind

Wind loads based on MWFRS with additional C&C member design.

Right end vertical not exposed to wind pressure.

Left cantilever is exposed to wind

Additional Notes

Shim all supports to solid bearing.

The overall height of this truss excluding overhang is 9-0-11.

WILLIAM H. KRICK
LICENSE
No. 70861
STATE OF FLORIDA
PROFESSIONAL ENGINEER

COA #0 278
05/24/2018

****WARNING**** READ AND FOLLOW ALL NOTES ON THIS DRAWING!
****IMPORTANT**** FURNISH THIS DRAWING TO ALL CONTRACTORS INCLUDING THE INSTALLERS

Trusses require extreme care in fabricating, handling, shipping, installing and bracing. Refer to and follow the latest edition of BCSI (Building Component Safety Information, by TPI and SBCA) for safety practices prior to performing these functions. Installers shall provide temporary bracing per BCSI. Unless noted otherwise,top chord shall have properly attached structural sheathing and bottom chord shall have a properly attached rigid ceiling. Locations shown for permanent lateral restraint of webs shall have bracing installed per BCSI sections B3, B7, or B10, as applicable. Apply plates to each face of truss and position as shown above and on the Joint Details, unless noted otherwise. Refer to drawings 160A-Z for standard plate positions.

Alpine, a division of ITW Building Components Group Inc. shall not be responsible for any deviation from this drawing,any failure to build the truss in conformance with ANSI/TPI 1, or for handling, shipping, installation and bracing of trusses**A seal on this drawing or cover page listing this drawing, indicates acceptance of professional engineering responsibility solely for the design shown. The suitability and use of this drawing for any structure is the responsibility of the Building Designer per ANSI/TPI 1 Sec.2.**

For more information see this job's general notes page and these web sites: ALPINE: www.alpineitw.com; TPI: www.tpinst.org; SBCA: www.sbcindustry.com; ICC: www.iccsafe.org

ALPINE
AN ITW COMPANY
6750 Forum Drive
Suite 305
Orlando FL, 32821

Job Number: 18-2262 FREEMAN **Truss Label:** G02	Ply: 1 Qty: 1	SEQN: 556468 / T91 HIPM FROM: CDM	Cust: R215 JRef: 1Wb72150004 DrwNo: 144.18.0744.07213 KM / BAF 05/24/2018

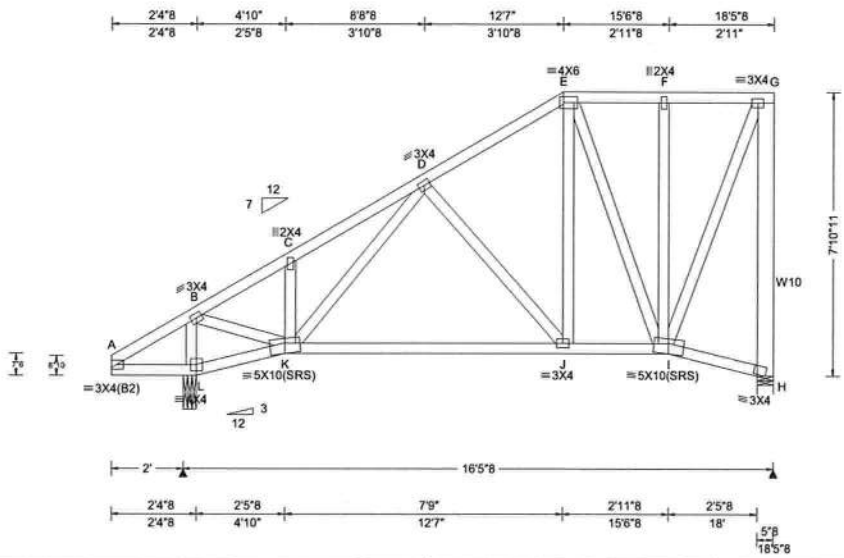

Loading Criteria (psf)

TCLL: 20.00
TCDL: 10.00
BCLL: 0.00
BCDL: 10.00
Des Ld: 40.00
NCBCLL: 10.00
Soffit: 2.00
Load Duration: 1.25
Spacing: 24.0 "

Wind Criteria

Wind Std: ASCE 7-10
Speed: 130 mph
Enclosure: Closed
Risk Category: II
EXP: C
Mean Height: 15.00 ft
TCDL: 5.0 psf
BCDL: 5.0 psf
MWFRS Parallel Dist: h/2 to h
C&C Dist a: 3.00 ft
Loc. from endwall: not in 9.00 ft
GCpi: 0.18
Wind Duration: 1.60

Snow Criteria (Pg,Pf in PSF)

Pg: NA Ct: NA CAT: NA
Pf: NA Ce: NA
Lu: NA Cs: NA
Snow Duration: NA

Code / Misc Criteria

Bldg Code: FBC 2017 RES
TPI Std: 2014
Rep Factors Used: Yes
FT/RT:20(0)/10(0)
Plate Type(s):
WAVE

Defl/CSI Criteria

PP Deflection in	loc	L/defl	L/#
VERT(LL): 0.013	D	999	240
VERT(TL): 0.044	D	999	180
HORZ(LL): 0.008	H	-	-
HORZ(TL): 0.018	H	-	-

Creep Factor: 2.0
Max TC CSI: 0.172
Max BC CSI: 0.514
Max Web CSI: 0.442

VIEW Ver: 17.02.00.1013.16

▲ Maximum Reactions (lbs)

Loc	R	/ U	/ Rw	/ Rh	/ RL	/ W
L	882	/ 79	/ 611	/ -	/ 209	/ 4.5
H	654	/ 170	/ 368	/ -	/ -	/ 5.5

Wind reactions based on MWFRS
L Min Brg Width Req = 1.5
H Min Brg Width Req = 5.5
Bearings L & H are a rigid surface.

Members not listed have forces less than 375#

Maximum Top Chord Forces Per Ply (lbs)

Chords	Tens.	Comp.	Chords	Tens.	Comp.
B - C	163	-698	D - E	124	-498
C - D	230	-719			

Maximum Bot Chord Forces Per Ply (lbs)

Chords	Tens.	Comp.
K - J	536	-234

Maximum Web Forces Per Ply (lbs)

Webs	Tens.	Comp.	Webs	Tens.	Comp.
B - L	192	-806	I - G	597	-218
B - K	723	-109	G - H	242	-632

Lumber

Top chord 2x4 SP #2
Bot chord 2x4 SP #2
Webs 2x4 SP #3 :W10 2x6 SP #2:

Purlins

In lieu of structural panels use purlins to brace all flat TC @ 24" oc.

Wind

Wind loads based on MWFRS with additional C&C member design.

Right end vertical not exposed to wind pressure.

Left cantilever is exposed to wind

Additional Notes

Shim all supports to solid bearing.

The overall height of this truss excluding overhang is 7-10-11.

WILLIAM H. KRICK
LICENSE
No. 70861
STATE OF FLORIDA
PROFESSIONAL ENGINEER

COA #0 278
05/24/2018

****WARNING**** READ AND FOLLOW ALL NOTES ON THIS DRAWING!
****IMPORTANT**** FURNISH THIS DRAWING TO ALL CONTRACTORS INCLUDING THE INSTALLERS

Trusses require extreme care in fabricating, handling, shipping, installing and bracing. Refer to and follow the latest edition of BCSI (Building Component Safety Information, by TPI and SBCA) for safety practices prior to performing these functions. Installers shall provide temporary bracing per BCSI. Unless noted otherwise,top chord shall have properly attached structural sheathing and bottom chord shall have a properly attached rigid ceiling. Locations shown for permanent lateral restraint of webs shall have bracing installed per BCSI sections B3, B7, or B10, as applicable. Apply plates to each face of truss and position as shown above and on the Joint Details, unless noted otherwise. Refer to drawings 160A-Z for standard plate positions.

Alpine, a division of ITW Building Components Group Inc. shall not be responsible for any deviation from this drawing,any failure to build the truss in conformance with ANSI/TPI 1, or for handling, shipping, installation and bracing of trusses**A seal on this drawing or cover page listing this drawing, indicates acceptance of professional engineering responsibility solely for the design shown. The suitability and use of this drawing for any structure is the responsibility of the Building Designer per ANSI/TPI 1 Sec.2.**

For more information see this job's general notes page and these web sites: ALPINE: www.alpineitw.com; TPI: www.tpinst.org; SBCA: www.sbcindustry.com; ICC: www.iccsafe.org

ALPINE AN ITW COMPANY
6750 Forum Drive
Suite 305
Orlando FL, 32821

Job Number: 18-2262 FREEMAN **Truss Label:** G03	Ply: 1 Qty: 1	SEQN: 556466 / T92 HIPM FROM: CDM	Cust: R215 JRef: 1Wb72150004 DrwNo: 144.18.0744.08570 KM / BAF 05/24/2018

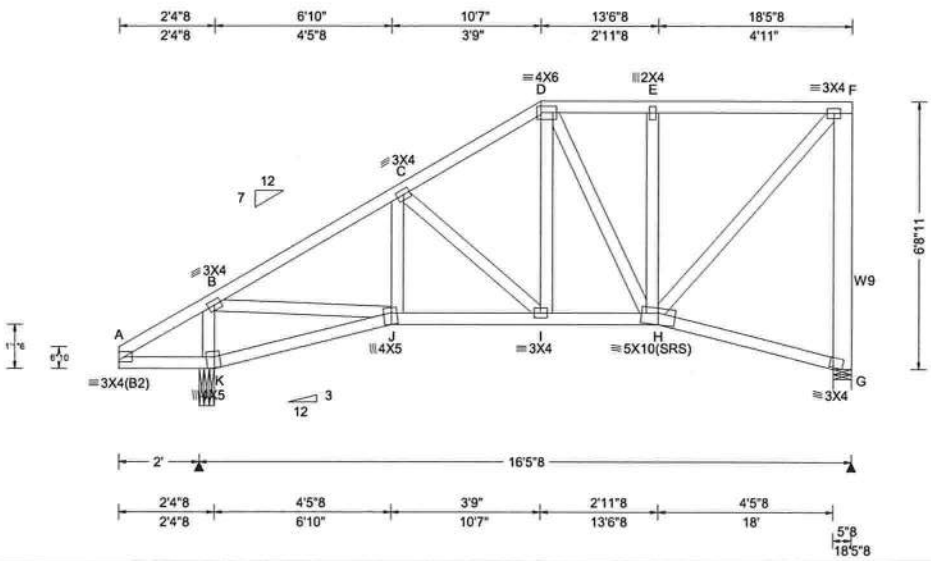

Loading Criteria (psf)
TCLL: 20.00
TCDL: 10.00
BCLL: 0.00
BCDL: 10.00
Des Ld: 40.00
NCBCLL: 10.00
Soffit: 2.00
Load Duration: 1.25
Spacing: 24.0 "

Wind Criteria
Wind Std: ASCE 7-10
Speed: 130 mph
Enclosure: Closed
Risk Category: II
EXP: C
Mean Height: 15.00 ft
TCDL: 5.0 psf
BCDL: 5.0 psf
MWFRS Parallel Dist: h/2 to h
C&C Dist a: 3.00 ft
Loc. from endwall: not in 9.00 ft
GCpi: 0.18
Wind Duration: 1.60

Snow Criteria (Pg,Pf in PSF)
Pg: NA Ct: NA CAT: NA
Pf: NA Ce: NA
Lu: NA Cs: NA
Snow Duration: NA

Code / Misc Criteria
Bldg Code: FBC 2017 RES
TPI Std: 2014
Rep Factors Used: Yes
FT/RT:20(0)/10(0)
Plate Type(s):
WAVE

Defl/CSI Criteria

PP Deflection in	loc	L/defl	L/#
VERT(LL): 0.016	C	999	240
VERT(TL): 0.051	C	999	180
HORZ(LL): 0.010	G	-	-
HORZ(TL): 0.021	G	-	-

Creep Factor: 2.0
Max TC CSI: 0.356
Max BC CSI: 0.249
Max Web CSI: 0.313

VIEW Ver: 17.02.00.1013.16

▲ Maximum Reactions (lbs)

Loc	R	/ U	/ Rw	/ Rh	/ RL	/ W
K	883	/ 94	/ 602	/ -	/ 176	/ 4.5
G	655	/ 156	/ 348	/ -	/ -	/ 5.5

Wind reactions based on MWFRS
K Min Brg Width Req = 1.5
G Min Brg Width Req = 5.5
Bearings K & G are a rigid surface.

Members not listed have forces less than 375#

Maximum Top Chord Forces Per Ply (lbs)

Chords	Tens.	Comp.	Chords	Tens.	Comp.
B - C	226	-879	D - E	158	-459
C - D	190	-651	E - F	154	-450

Maximum Bot Chord Forces Per Ply (lbs)

Chords	Tens.	Comp.	Chords	Tens.	Comp.
J - I	695	-292	I - H	503	-181

Maximum Web Forces Per Ply (lbs)

Webs	Tens.	Comp.	Webs	Tens.	Comp.
B - K	222	-771	H - F	663	-227
B - J	763	-124	F - G	231	-619

Lumber

Top chord 2x4 SP #2
Bot chord 2x4 SP #2
Webs 2x4 SP #3 :W9 2x6 SP #2:

Purlins

In lieu of structural panels use purlins to brace all flat TC @ 24" oc.

Wind

Wind loads based on MWFRS with additional C&C member design.

Right end vertical not exposed to wind pressure.

Left cantilever is exposed to wind

Additional Notes

Shim all supports to solid bearing.

The overall height of this truss excluding overhang is 6-8-11.

WILLIAM H. KRICK
LICENSE
No. 70861
STATE OF FLORIDA
PROFESSIONAL ENGINEER

COA #0 278
05/24/2018

****WARNING**** READ AND FOLLOW ALL NOTES ON THIS DRAWING!
****IMPORTANT**** FURNISH THIS DRAWING TO ALL CONTRACTORS INCLUDING THE INSTALLERS

Trusses require extreme care in fabricating, handling, shipping, installing and bracing. Refer to and follow the latest edition of BCSI (Building Component Safety Information, by TPI and SBCA) for safety practices prior to performing these functions. Installers shall provide temporary bracing per BCSI. Unless noted otherwise,top chord shall have properly attached structural sheathing and bottom chord shall have a properly attached rigid ceiling. Locations shown for permanent lateral restraint of webs shall have bracing installed per BCSI sections B3, B7, or B10, as applicable. Apply plates to each face of truss and position as shown above and on the Joint Details, unless noted otherwise. Refer to drawings 160A-Z for standard plate positions.

Alpine, a division of ITW Building Components Group Inc. shall not be responsible for any deviation from this drawing,any failure to build the truss in conformance with ANSI/TPI 1, or for handling, shipping, installation and bracing of trusses**A seal on this drawing or cover page listing this drawing, indicates acceptance of professional engineering responsibility solely for the design shown. The suitability and use of this drawing for any structure is the responsibility of the Building Designer per ANSI/TPI 1 Sec.2.**

For more information see this job's general notes page and these web sites: ALPINE: www.alpineitw.com; TPI: www.tpinst.org; SBCA: www.sbcindustry.com; ICC: www.iccsafe.org

ALPINE
AN ITW COMPANY
6750 Forum Drive
Suite 305
Orlando FL, 32821

Job Number: 18-2262 FREEMAN **Truss Label:** G04	Ply: 1 Qty: 1	SEQN: 556464 / T93 HIPM FROM: CDM	Cust: R215 JRef: 1Wb72150004 DrwNo: 144.18.0744.10210 KM / BAF 05/24/2018

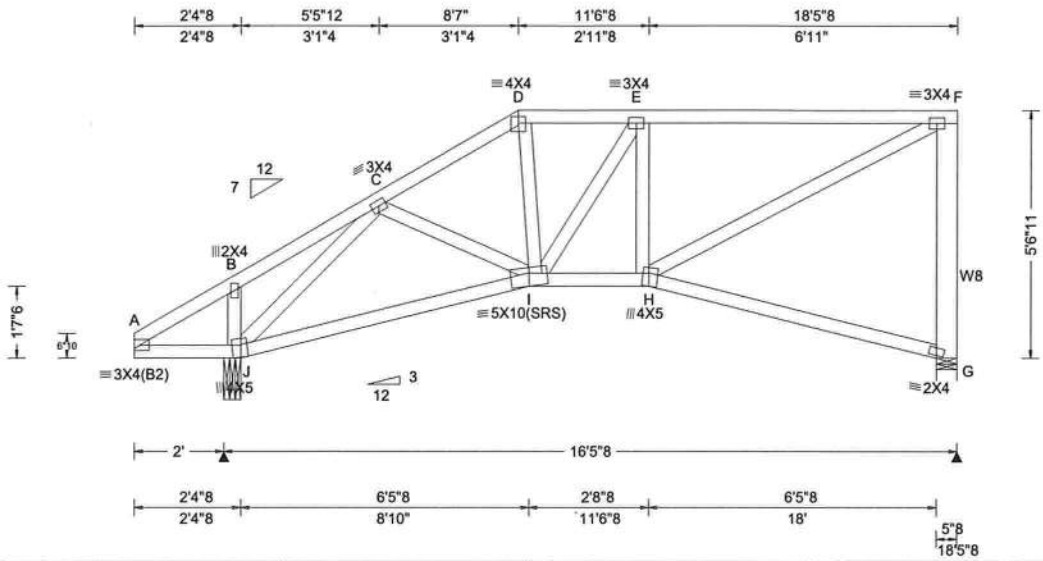

Loading Criteria (psf)
TCLL: 20.00
TCDL: 10.00
BCLL: 0.00
BCDL: 10.00
Des Ld: 40.00
NCBCLL: 10.00
Soffit: 2.00
Load Duration: 1.25
Spacing: 24.0 "

Wind Criteria
Wind Std: ASCE 7-10
Speed: 130 mph
Enclosure: Closed
Risk Category: II
EXP: C
Mean Height: 15.00 ft
TCDL: 5.0 psf
BCDL: 5.0 psf
MWFRS Parallel Dist: h/2 to h
C&C Dist a: 3.00 ft
Loc. from endwall: not in 4.50 ft
GCpi: 0.18
Wind Duration: 1.60

Snow Criteria (Pg,Pf in PSF)
Pg: NA Ct: NA CAT: NA
Pf: NA Ce: NA
Lu: NA Cs: NA
Snow Duration: NA

Code / Misc Criteria
Bldg Code: FBC 2017 RES
TPI Std: 2014
Rep Factors Used: Yes
FT/RT:20(0)/10(0)
Plate Type(s):
WAVE

Defl/CSI Criteria

PP Deflection in	loc	L/defl	L/#
VERT(LL): 0.023	E	999	240
VERT(TL): 0.076	E	999	180
HORZ(LL): 0.016	G	-	-
HORZ(TL): 0.033	G	-	-

Creep Factor: 2.0
Max TC CSI: 0.770
Max BC CSI: 0.473
Max Web CSI: 0.423

VIEW Ver: 17.02.00.1013.16

▲ Maximum Reactions (lbs)

Loc	R	/ U	/ Rw	/ Rh	/ RL	/ W
J	885	/ 108	/ 589	/ -	/ 142	/ 4.5
G	665	/ 145	/ 333	/ -	/ -	/ 5.5

Wind reactions based on MWFRS
J Min Brg Width Req = 1.5
G Min Brg Width Req = 5.5
Bearings J & G are a rigid surface.

Members not listed have forces less than 375#

Maximum Top Chord Forces Per Ply (lbs)

Chords	Tens.	Comp.	Chords	Tens.	Comp.
C - D	256	-851	E - F	255	-790
D - E	251	-705			

Maximum Bot Chord Forces Per Ply (lbs)

Chords	Tens.	Comp.	Chords	Tens.	Comp.
J - I	623	-296	I - H	814	-257

Maximum Web Forces Per Ply (lbs)

Webs	Tens.	Comp.	Webs	Tens.	Comp.
J - C	226	-955	F - G	221	-603
H - F	893	-289			

Lumber

Top chord 2x4 SP #2
Bot chord 2x4 SP #2
Webs 2x4 SP #3 :W8 2x6 SP #2:

Purlins

In lieu of structural panels use purlins to brace all flat TC @ 24" oc.

Wind

Wind loads based on MWFRS with additional C&C member design.

Right end vertical not exposed to wind pressure.

Left cantilever is exposed to wind

Additional Notes

Shim all supports to solid bearing.

The overall height of this truss excluding overhang is 5-6-11.

WILLIAM H. KRICK
LICENSE
No. 70861
STATE OF FLORIDA
PROFESSIONAL ENGINEER

COA #0278

05/24/2018

****WARNING**** READ AND FOLLOW ALL NOTES ON THIS DRAWING!
****IMPORTANT**** FURNISH THIS DRAWING TO ALL CONTRACTORS INCLUDING THE INSTALLERS

Trusses require extreme care in fabricating, handling, shipping, installing and bracing. Refer to and follow the latest edition of BCSI (Building Component Safety Information, by TPI and SBCA) for safety practices prior to performing these functions. Installers shall provide temporary bracing per BCSI. Unless noted otherwise,top chord shall have properly attached structural sheathing and bottom chord shall have a properly attached rigid ceiling. Locations shown for permanent lateral restraint of webs shall have bracing installed per BCSI sections B3, B7, or B10, as applicable. Apply plates to each face of truss and position as shown above and on the Joint Details, unless noted otherwise. Refer to drawings 160A-Z for standard plate positions.

Alpine, a division of ITW Building Components Group Inc. shall not be responsible for any deviation from this drawing,any failure to build the truss in conformance with ANSI/TPI 1, or for handling, shipping, installation and bracing of trusses**A seal on this drawing or cover page listing this drawing, indicates acceptance of professional engineering responsibility solely for the design shown. The suitability and use of this drawing for any structure is the responsibility of the Building Designer per ANSI/TPI 1 Sec.2.**

For more information see this job's general notes page and these web sites: ALPINE: www.alpineitw.com; TPI: www.tpinst.org; SBCA: www.sbcindustry.com; ICC: www.iccsafe.org

ALPINE
AN ITW COMPANY
6750 Forum Drive
Suite 305
Orlando FL, 32821

Job Number: 18-2262 FREEMAN **Truss Label:** G05	Ply: 1 Qty: 1	SEQN: 555916 / T98 HIPM FROM: CDM	Cust: R215 JRef: 1Wb72150004 DrwNo: 144.18.0744.12283 KM / BAF 05/24/2018

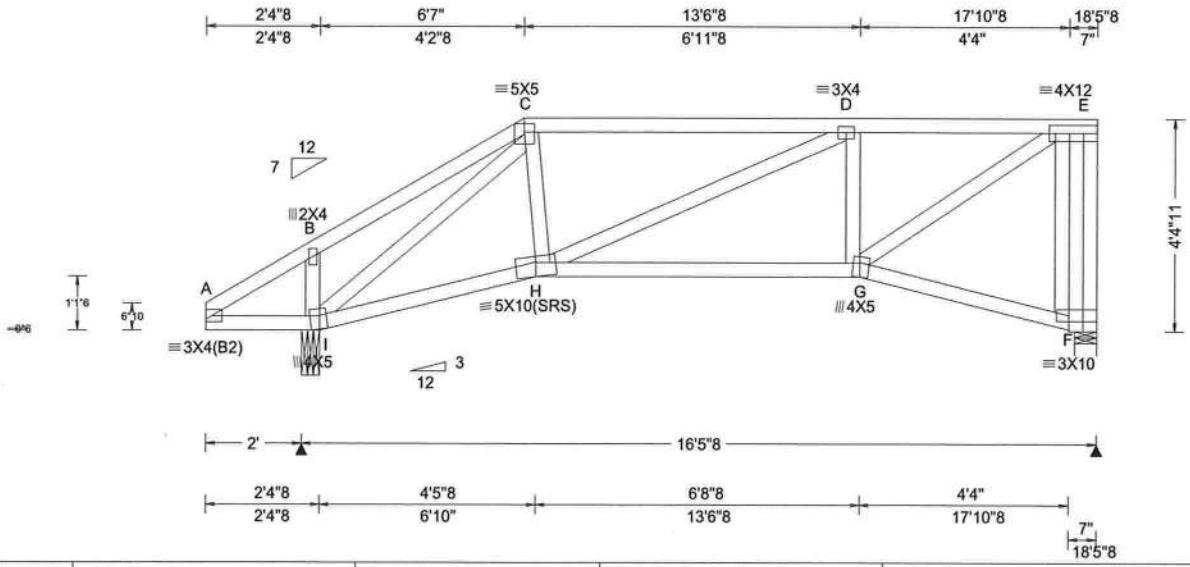

Loading Criteria (psf)

TCLL:	20.00
TCDL:	10.00
BCLL:	0.00
BCDL:	10.00
Des Ld:	40.00
NCBCLL:	10.00
Soffit:	2.00

Load Duration: 1.25
Spacing: 24.0 "

Wind Criteria
Wind Std: ASCE 7-10
Speed: 130 mph
Enclosure: Closed
Risk Category: II
EXP: C
Mean Height: 15.00 ft
TCDL: 5.0 psf
BCDL: 5.0 psf
MWFRS Parallel Dist: 0 to h/2
C&C Dist a: 3.00 ft
Loc. from endwall: not in 4.50 ft
GCpi: 0.18
Wind Duration: 1.60

Snow Criteria (Pg,Pf in PSF)
Pg: NA Ct: NA CAT: NA
Pf: NA Ce: NA
Lu: NA Cs: NA
Snow Duration: NA

Code / Misc Criteria
Bldg Code: FBC 2017 RES
TPI Std: 2014
Rep Factors Used: Yes
FT/RT:20(0)/10(0)
Plate Type(s):
WAVE

Defl/CSI Criteria

PP Deflection in	loc	L/defl	L/#
VERT(LL): 0.021	D	999	240
VERT(TL): 0.069	D	999	180
HORZ(LL): 0.016	F	-	-
HORZ(TL): 0.033	F	-	-

Creep Factor: 2.0
Max TC CSI: 0.600
Max BC CSI: 0.421
Max Web CSI: 0.637

VIEW Ver: 17.02.00.1013.16

▲ Maximum Reactions (lbs)

Loc	R	/ U	/ Rw	/ Rh	/ RL	/ W
I	865	/ 116	/ 560	/ -	/ 109	/ 4.5
F	683	/ 141	/ 325	/ -	/ -	/ 5.5

Wind reactions based on MWFRS
I Min Brg Width Req = 1.5
F Min Brg Width Req = 5.5
Bearings I & F are a rigid surface.

Members not listed have forces less than 375#

Maximum Top Chord Forces Per Ply (lbs)

Chords	Tens.	Comp.	Chords	Tens.	Comp.
C - D	235	-672	D - E	225	-771

Maximum Bot Chord Forces Per Ply (lbs)

Chords	Tens.	Comp.	Chords	Tens.	Comp.
I - H	675	-241	H - G	808	-235

Maximum Web Forces Per Ply (lbs)

Webs	Tens.	Comp.	Webs	Tens.	Comp.
I - C	188	-957	G - E	904	-261
C - H	392	-40	E - F	290	-691
D - G	169	-383			

Lumber

Top chord 2x4 SP #2
Bot chord 2x4 SP #2
Webs 2x4 SP #3
:Rt Bearing Leg 2x4 SP #3:

Purlins

In lieu of structural panels use purlins to brace all flat TC @ 24" oc.

Wind

Wind loads based on MWFRS with additional C&C member design.

Right end vertical not exposed to wind pressure.

Left cantilever is exposed to wind

Additional Notes

Shim all supports to solid bearing.

The overall height of this truss excluding overhang is 4-4-11.

WILLIAM H. KRICK
LICENSE
No. 70861
STATE OF FLORIDA
PROFESSIONAL ENGINEER

COA #0278

05/24/2018

****WARNING**** READ AND FOLLOW ALL NOTES ON THIS DRAWING!
****IMPORTANT**** FURNISH THIS DRAWING TO ALL CONTRACTORS INCLUDING THE INSTALLERS

Trusses require extreme care in fabricating, handling, shipping, installing and bracing. Refer to and follow the latest edition of BCSI (Building Component Safety Information, by TPI and SBCA) for safety practices prior to performing these functions. Installers shall provide temporary bracing per BCSI. Unless noted otherwise,top chord shall have properly attached structural sheathing and bottom chord shall have a properly attached rigid ceiling. Locations shown for permanent lateral restraint of webs shall have bracing installed per BCSI sections B3, B7, or B10, as applicable. Apply plates to each face of truss and position as shown above and on the Joint Details, unless noted otherwise. Refer to drawings 160A-Z for standard plate positions.

Alpine, a division of ITW Building Components Group Inc. shall not be responsible for any deviation from this drawing,any failure to build the truss in conformance with ANSI/TPI 1, or for handling, shipping, installation and bracing of trusses**A seal on this drawing or cover page listing this drawing, indicates acceptance of professional engineering responsibility solely for the design shown. The suitability and use of this drawing for any structure is the responsibility of the Building Designer per ANSI/TPI 1 Sec.2.**

For more information see this job's general notes page and these web sites: ALPINE: www.alpineitw.com; TPI: www.tpinst.org; SBCA: www.sbcindustry.com; ICC: www.iccsafe.org

ALPINE
AN ITW COMPANY
6750 Forum Drive
Suite 305
Orlando FL, 32821

Job Number: 18-2262 FREEMAN **Truss Label:** G06	Ply: 1 Qty: 1	SEQN: 556472 / T85 SPEC FROM: CDM	Cust: R215 JRef: 1Wb72150004 DrwNo: 144.18.0744.14177 KM / BAF 05/24/2018

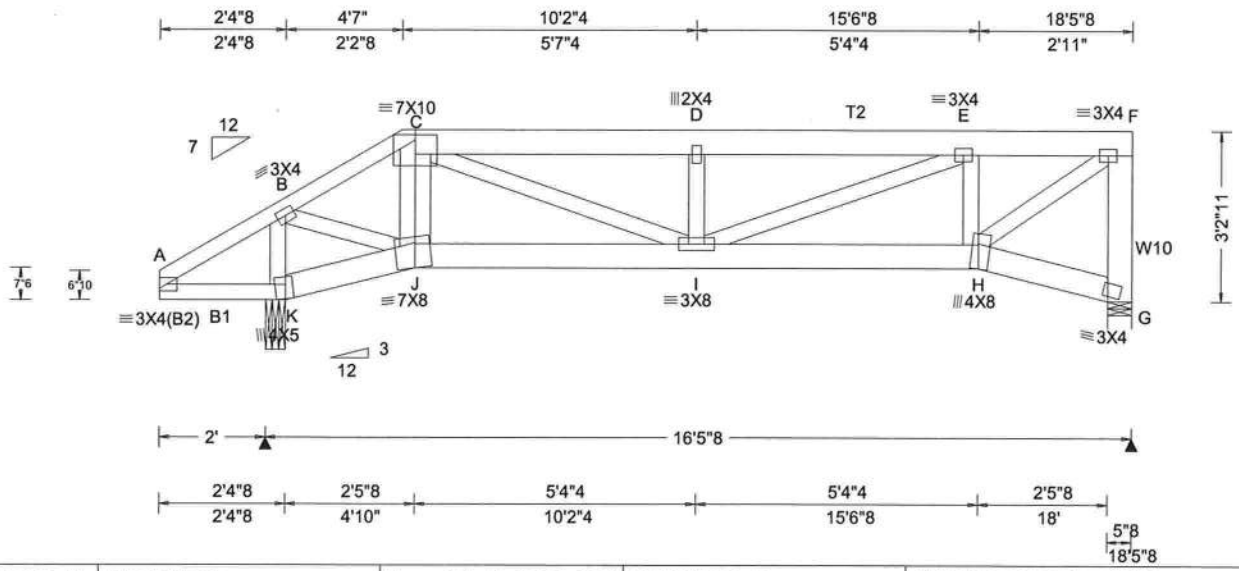

Loading Criteria (psf)

TCLL: 20.00
TCDL: 10.00
BCLL: 0.00
BCDL: 10.00
Des Ld: 40.00
NCBCLL: 10.00
Soffit: 2.00
Load Duration: 1.25
Spacing: 24.0 "

Wind Criteria

Wind Std: ASCE 7-10
Speed: 130 mph
Enclosure: Closed
Risk Category: II
EXP: C
Mean Height: 15.00 ft
TCDL: 5.0 psf
BCDL: 5.0 psf
MWFRS Parallel Dist: 0 to h/2
C&C Dist a: 3.00 ft
Loc. from endwall: not in 4.50 ft
GCpi: 0.18
Wind Duration: 1.60

Snow Criteria (Pg,Pf in PSF)

Pg: NA Ct: NA CAT: NA
Pf: NA Ce: NA
Lu: NA Cs: NA
Snow Duration: NA

Code / Misc Criteria

Bldg Code: FBC 2017 RES
TPI Std: 2014
Rep Factors Used: Yes
FT/RT:20(0)/10(0)
Plate Type(s):
WAVE

Defl/CSI Criteria

PP Deflection in	loc	L/defl	L/#
VERT(LL): -0.029	D	999	240
VERT(TL): 0.084	D	999	180
HORZ(LL): -0.010	G	-	-
HORZ(TL): 0.020	G	-	-

Creep Factor: 2.0
Max TC CSI: 0.191
Max BC CSI: 0.190
Max Web CSI: 0.353

VIEW Ver: 17.02.00.1013.16

▲ Maximum Reactions (lbs)

Loc	R	/ U	/ Rw	/ Rh	/ RL	/ W
K	837	/ 486	/ 547	/ -	/ 77	/ 4.5
G	626	/ 296	/ 312	/ -	/ -	/ 5.5

Wind reactions based on MWFRS
K Min Brg Width Req = 1.5
G Min Brg Width Req = 5.5
Bearings K & G are a rigid surface.

Members not listed have forces less than 375#

Maximum Top Chord Forces Per Ply (lbs)

Chords	Tens.	Comp.	Chords	Tens.	Comp.
B - C	527	-651	D - E	737	-1134
C - D	738	-1137	E - F	389	-751

Maximum Bot Chord Forces Per Ply (lbs)

Chords	Tens.	Comp.	Chords	Tens.	Comp.
J - I	535	-445	I - H	809	-422

Maximum Web Forces Per Ply (lbs)

Webs	Tens.	Comp.	Webs	Tens.	Comp.
B - K	493	-734	E - H	251	-432
B - J	664	-506	H - F	926	-481
C - I	668	-317	F - G	302	-601
D - I	150	-385			

Lumber

Top chord 2x4 SP #2 :T2 2x6 SP #2:
Bot chord 2x6 SP #2 :B1 2x4 SP #2:
Webs 2x4 SP #3 :W10 2x6 SP #2:

Special Loads

------(Lumber Dur.Fac.=1.25 / Plate Dur.Fac.=1.25)

TC: From	63 plf at	0.00 to	63 plf at	4.58
TC: From	32 plf at	4.58 to	32 plf at	18.46
BC: From	20 plf at	0.00 to	20 plf at	2.38
BC: From	21 plf at	2.38 to	21 plf at	4.83
BC: From	10 plf at	4.83 to	10 plf at	15.54
BC: From	10 plf at	15.54 to	10 plf at	18.17

TC: 90 lb Conc. Load at 4.61
TC: 65 lb Conc. Load at 6.65, 8.65,10.65,12.65
TC: 80 lb Conc. Load at 14.65
TC: 60 lb Conc. Load at 16.65
BC: -34 lb Conc. Load at 4.61
BC: -15 lb Conc. Load at 6.65, 8.65,10.65,12.65
BC: 52 lb Conc. Load at 14.65
BC: 47 lb Conc. Load at 16.65

Purlins

In lieu of structural panels use purlins to brace all flat TC @ 24" oc.

Wind

Wind loads based on MWFRS.

Right end vertical not exposed to wind pressure.

Left cantilever is exposed to wind

Additional Notes

Shim all supports to solid bearing.

The overall height of this truss excluding overhang is 3-2-11.

WILLIAM H. KRICK
LICENSE
No. 70861
STATE OF FLORIDA
PROFESSIONAL ENGINEER

COA #0278

05/24/2018

****WARNING**** READ AND FOLLOW ALL NOTES ON THIS DRAWING!
****IMPORTANT**** FURNISH THIS DRAWING TO ALL CONTRACTORS INCLUDING THE INSTALLERS

Trusses require extreme care in fabricating, handling, shipping, installing and bracing. Refer to and follow the latest edition of BCSI (Building Component Safety Information, by TPI and SBCA) for safety practices prior to performing these functions. Installers shall provide temporary bracing per BCSI. Unless noted otherwise,top chord shall have properly attached structural sheathing and bottom chord shall have a properly attached rigid ceiling. Locations shown for permanent lateral restraint of webs shall have bracing installed per BCSI sections B3, B7, or B10, as applicable. Apply plates to each face of truss and position as shown above and on the Joint Details, unless noted otherwise. Refer to drawings 160A-Z for standard plate positions.

Alpine, a division of ITW Building Components Group Inc. shall not be responsible for any deviation from this drawing,any failure to build the truss in conformance with ANSI/TPI 1, or for handling, shipping, installation and bracing of trusses**A seal on this drawing or cover page listing this drawing, indicates acceptance of professional engineering responsibility solely for the design shown. The suitability and use of this drawing for any structure is the responsibility of the Building Designer per ANSI/TPI 1 Sec.2.**

For more information see this job's general notes page and these web sites: ALPINE: www.alpineitw.com; TPI: www.tpinst.org; SBCA: www.sbcindustry.com; ICC: www.iccsafe.org

ALPINE™ AN ITW COMPANY
6750 Forum Drive
Suite 305
Orlando FL, 32821

Job Number: 18-2262 FREEMAN **Truss Label:** H01	Ply: 1 Qty: 2	SEQN: 556474 / T49 MONO FROM: CDM	Cust: R215 JRef: 1Wb72150004 DrwNo: 144.18.0744.15710 KM / BAF 05/24/2018

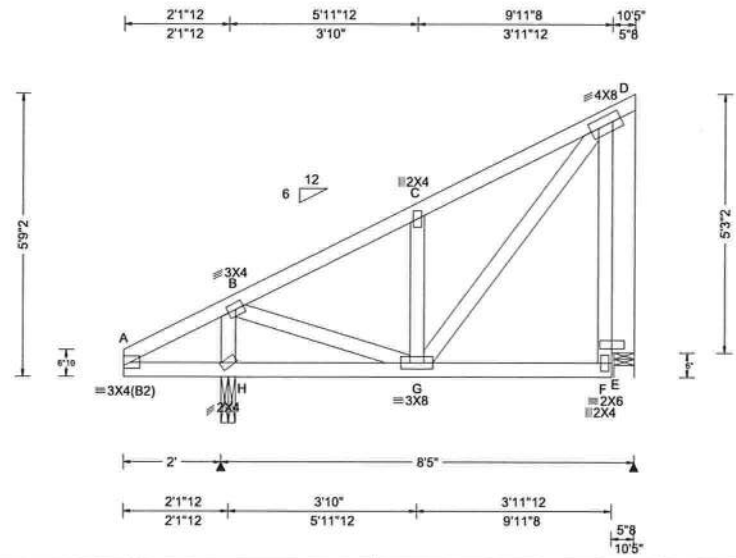

Loading Criteria (psf)	**Wind Criteria**	**Snow Criteria** (Pg,Pf in PSF)	**Defl/CSI Criteria**	**▲ Maximum Reactions (lbs)**
TCLL: 20.00 TCDL: 10.00 BCLL: 0.00 BCDL: 10.00 Des Ld: 40.00 NCBCLL: 10.00 Soffit: 2.00 Load Duration: 1.25 Spacing: 24.0 "	Wind Std: ASCE 7-10 Speed: 130 mph Enclosure: Closed Risk Category: II EXP: C Mean Height: 15.00 ft TCDL: 5.0 psf BCDL: 5.0 psf MWFRS Parallel Dist: h/2 to h C&C Dist a: 3.00 ft Loc. from endwall: not in 9.00 ft GCpi: 0.18 Wind Duration: 1.60	Pg: NA Ct: NA CAT: NA Pf: NA Ce: NA Lu: NA Cs: NA Snow Duration: NA **Code / Misc Criteria** Bldg Code: FBC 2017 RES TPI Std: 2014 Rep Factors Used: Yes FT/RT:20(0)/10(0) Plate Type(s): WAVE	PP Deflection in loc L/defl L/# VERT(LL): 0.005 C 999 240 VERT(TL): 0.016 C 999 180 HORZ(LL): -0.002 D - - HORZ(TL): 0.004 D - - Creep Factor: 2.0 Max TC CSI: 0.175 Max BC CSI: 0.131 Max Web CSI: 0.136 VIEW Ver: 17.02.00.1013.16	Loc R / U / Rw / Rh / RL / W H 528 / 20 / 386 / - / 148 / 3.5 E 332 / 114 / 217 / - / - / 5.0 Wind reactions based on MWFRS H Min Brg Width Req = 1.5 E Min Brg Width Req = 5.0 Bearings H & E are a rigid surface. Members not listed have forces less than 375# **Maximum Web Forces Per Ply (lbs)** Webs Tens.Comp. Webs Tens. Comp. H - B 135 -449 D - E 370 -444

Lumber

Top chord 2x4 SP #2
Bot chord 2x4 SP #2
Webs 2x4 SP #3
:Rt Bearing Leg 2x6 SP #2:

Wind

Wind loads based on MWFRS with additional C&C member design.

Right end vertical not exposed to wind pressure.

Left cantilever is exposed to wind

Additional Notes

The overall height of this truss excluding overhang is 5-9-2.

WILLIAM H. KRICK
LICENSE
No. 70861
STATE OF FLORIDA
PROFESSIONAL ENGINEER

COA #0278

05/24/2018

****WARNING**** READ AND FOLLOW ALL NOTES ON THIS DRAWING!
****IMPORTANT**** FURNISH THIS DRAWING TO ALL CONTRACTORS INCLUDING THE INSTALLERS

Trusses require extreme care in fabricating, handling, shipping, installing and bracing. Refer to and follow the latest edition of BCSI (Building Component Safety Information, by TPI and SBCA) for safety practices prior to performing these functions. Installers shall provide temporary bracing per BCSI. Unless noted otherwise,top chord shall have properly attached structural sheathing and bottom chord shall have a properly attached rigid ceiling. Locations shown for permanent lateral restraint of webs shall have bracing installed per BCSI sections B3, B7, or B10, as applicable. Apply plates to each face of truss and position as shown above and on the Joint Details, unless noted otherwise. Refer to drawings 160A-Z for standard plate positions.

Alpine, a division of ITW Building Components Group Inc. shall not be responsible for any deviation from this drawing,any failure to build the truss in conformance with ANSI/TPI 1, or for handling, shipping, installation and bracing of trusses**A seal on this drawing or cover page listing this drawing, indicates acceptance of professional engineering responsibility solely for the design shown. The suitability and use of this drawing for any structure is the responsibility of the Building Designer per ANSI/TPI 1 Sec.2.**

For more information see this job's general notes page and these web sites: ALPINE: www.alpineitw.com; TPI: www.tpinst.org; SBCA: www.sbcindustry.com; ICC: www.iccsafe.org

ALPINE™ AN ITW COMPANY
6750 Forum Drive
Suite 305
Orlando FL, 32821

Job Number: 18-2262 FREEMAN **Truss Label:** H02	Ply: 2 Qty: 2	SEQN: 556571 / T51 MONO FROM: CDM	Cust: R215 JRef: 1Wb72150004 DrwNo: 144.18.0744.17553 KM / BAF 05/24/2018

2 Complete Trusses Required

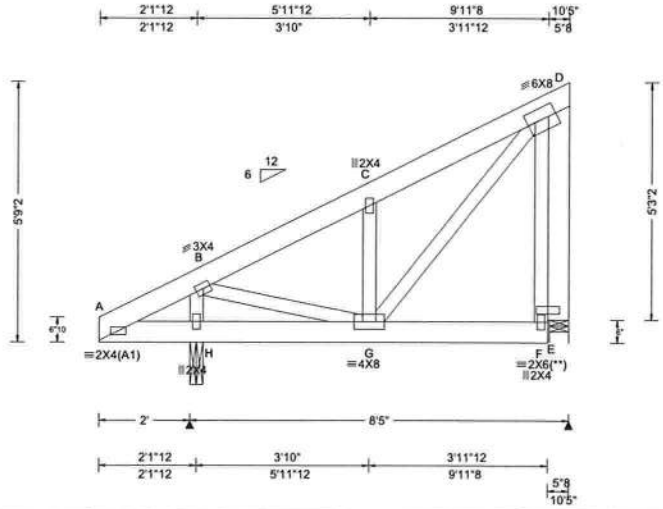

Loading Criteria (psf)
TCLL: 20.00
TCDL: 10.00
BCLL: 0.00
BCDL: 10.00
Des Ld: 40.00
NCBCLL: 0.00
Soffit: 2.00
Load Duration: 1.25
Spacing: 24.0 "

Wind Criteria
Wind Std: ASCE 7-10
Speed: 130 mph
Enclosure: Closed
Risk Category: II
EXP: C
Mean Height: 15.00 ft
TCDL: 5.0 psf
BCDL: 5.0 psf
MWFRS Parallel Dist: 0 to h/2
C&C Dist a: 3.00 ft
Loc. from endwall: NA
GCpi: 0.18
Wind Duration: 1.60

Snow Criteria (Pg,Pf in PSF)
Pg: NA Ct: NA CAT: NA
Pf: NA Ce: NA
Lu: NA Cs: NA
Snow Duration: NA

Code / Misc Criteria
Bldg Code: FBC 2017 RES
TPI Std: 2014
Rep Factors Used: No
FT/RT:20(0)/10(0)
Plate Type(s):
WAVE

Defl/CSI Criteria

PP Deflection in	loc	L/defl	L/#
VERT(LL): 0.012	C	999	240
VERT(TL): 0.045	C	999	180
HORZ(LL): 0.006	C	-	-
HORZ(TL): 0.014	C	-	-

Creep Factor: 2.0
Max TC CSI: 0.424
Max BC CSI: 0.627
Max Web CSI: 0.422

VIEW Ver: 17.02.00.1013.16

▲ Maximum Reactions (lbs)

Loc	R	/ U	/ Rw	/ Rh	/ RL	/ W
H	2319	/ 230	/ -	/ -	/ -	/ 3.5
E	2784	/ 391	/ -	/ -	/ -	/ 5.0

Wind reactions based on MWFRS
H Min Brg Width Req = 1.5
E Min Brg Width Req = 5.0
Bearings H & E are a rigid surface.

Members not listed have forces less than 375#

Maximum Top Chord Forces Per Ply (lbs)

Chords	Tens.	Comp.	Chords	Tens.	Comp.
B - C	92	-935	C - D	95	-1024

Maximum Web Forces Per Ply (lbs)

Webs	Tens.	Comp.	Webs	Tens.	Comp.
H - B	128	-641	G - D	1107	-82
B - G	536	-58	D - E	264	-1774
C - G	126	-632			

Lumber
Top chord 2x6 SP #2
Bot chord 2x6 SP #2
Webs 2x4 SP #3
:Rt Bearing Leg 2x6 SP #2:

Nailnote
Nail Schedule:0.131"x3", min. nails
Top Chord: 1 Row @ 5.00" o.c.
Bot Chord: 1 Row @11.25" o.c.
Webs : 1 Row @ 4" o.c.
Use equal spacing between rows and stagger nails in each row to avoid splitting.

Special Loads
------(Lumber Dur.Fac.=1.25 / Plate Dur.Fac.=1.25)
TC: From 62 plf at 0.00 to 62 plf at 4.00
TC: From 118 plf at 4.00 to 74 plf at 10.42
BC: From 20 plf at 0.00 to 20 plf at 10.42
TC: 460 lb Conc. Load at 4.17
TC: 215 lb Conc. Load at 6.26
TC: 255 lb Conc. Load at 8.26
TC: 1170 lb Conc. Load at 9.06
TC: 561 lb Conc. Load at 9.94
BC: 1366 lb Conc. Load at 4.15

Plating Notes
(**) 1 plate(s) require special positioning. Refer to scaled plate plot details for special positioning requirements.

Wind
Wind loads and reactions based on MWFRS.
Right end vertical not exposed to wind pressure.
Left cantilever is exposed to wind

Additional Notes
The overall height of this truss excluding overhang is 5-9-2.
WIND LOAD CASE MODIFIED!

WILLIAM H. KRICK
LICENSE
No. 70861
STATE OF FLORIDA
PROFESSIONAL ENGINEER

COA #0 278

05/24/2018

****WARNING**** READ AND FOLLOW ALL NOTES ON THIS DRAWING!
****IMPORTANT**** FURNISH THIS DRAWING TO ALL CONTRACTORS INCLUDING THE INSTALLERS

Trusses require extreme care in fabricating, handling, shipping, installing and bracing. Refer to and follow the latest edition of BCSI (Building Component Safety Information, by TPI and SBCA) for safety practices prior to performing these functions. Installers shall provide temporary bracing per BCSI. Unless noted otherwise,top chord shall have properly attached structural sheathing and bottom chord shall have a properly attached rigid ceiling. Locations shown for permanent lateral restraint of webs shall have bracing installed per BCSI sections B3, B7, or B10, as applicable. Apply plates to each face of truss and position as shown above and on the Joint Details, unless noted otherwise. Refer to drawings 160A-Z for standard plate positions.

Alpine, a division of ITW Building Components Group Inc. shall not be responsible for any deviation from this drawing,any failure to build the truss in conformance with ANSI/TPI 1, or for handling, shipping, installation and bracing of trusses**A seal on this drawing or cover page listing this drawing, indicates acceptance of professional engineering responsibility solely for the design shown. The suitability and use of this drawing for any structure is the responsibility of the Building Designer per ANSI/TPI 1 Sec.2.**

For more information see this job's general notes page and these web sites: ALPINE: www.alpineitw.com; TPI: www.tpinst.org; SBCA: www.sbcindustry.com; ICC: www.iccsafe.org

ALPINE
AN ITW COMPANY
6750 Forum Drive
Suite 305
Orlando FL, 32821

Job Number: 18-2262 FREEMAN **Truss Label:** H03	Ply: 1 Qty: 2	SEQN: 556478 / T46 HIPM FROM: CDM	Cust: R215 JRef: 1Wb72150004 DrwNo: 144.18.0744.18657 KM / BAF 05/24/2018

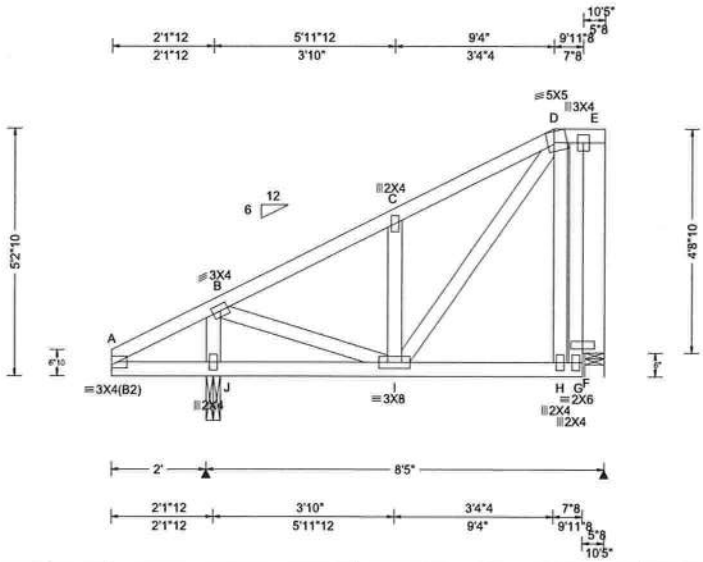

Loading Criteria (psf)	**Wind Criteria**	**Snow Criteria** (Pg,Pf in PSF)	**Defl/CSI Criteria**	**▲ Maximum Reactions (lbs)**
TCLL: 20.00 TCDL: 10.00 BCLL: 0.00 BCDL: 10.00 Des Ld: 40.00 NCBCLL: 10.00 Soffit: 2.00 Load Duration: 1.25 Spacing: 24.0 "	Wind Std: ASCE 7-10 Speed: 130 mph Enclosure: Closed Risk Category: II EXP: C Mean Height: 15.00 ft TCDL: 5.0 psf BCDL: 5.0 psf MWFRS Parallel Dist: h/2 to h C&C Dist a: 3.00 ft Loc. from endwall: not in 4.50 ft GCpi: 0.18 Wind Duration: 1.60	Pg: NA Ct: NA CAT: NA Pf: NA Ce: NA Lu: NA Cs: NA Snow Duration: NA **Code / Misc Criteria** Bldg Code: FBC 2017 RES TPI Std: 2014 Rep Factors Used: Yes FT/RT:20(0)/10(0) Plate Type(s): WAVE	PP Deflection in loc L/defl L/# VERT(LL): 0.008 C 999 240 VERT(TL): 0.026 C 999 180 HORZ(LL): 0.004 C - - HORZ(TL): 0.009 C - - Creep Factor: 2.0 Max TC CSI: 0.181 Max BC CSI: 0.146 Max Web CSI: 0.138 VIEW Ver: 17.02.00.1013.16	Loc R / U / Rw / Rh / RL / W J 528 / 30 / 388 / - / 133 / 3.5 F 332 / 106 / 199 / - / - / 5.0 Wind reactions based on MWFRS J Min Brg Width Req = 1.5 F Min Brg Width Req = 5.0 Bearings J & F are a rigid surface. Members not listed have forces less than 375# **Maximum Web Forces Per Ply (lbs)** Webs Tens.Comp. Webs Tens. Comp. J - B 150 -452 E - F 472 -604

Lumber

Top chord 2x4 SP #2
Bot chord 2x4 SP #2
Webs 2x4 SP #3
:Rt Bearing Leg 2x6 SP #2:

Purlins

In lieu of structural panels use purlins to brace all flat TC @ 24" oc.

Wind

Wind loads based on MWFRS with additional C&C member design.

Right end vertical not exposed to wind pressure.

Left cantilever is exposed to wind

Additional Notes

The overall height of this truss excluding overhang is 5-2-10.

WILLIAM H. KRICK
LICENSE
No. 70861
STATE OF FLORIDA
PROFESSIONAL ENGINEER

COA #0.278

05/24/2018

****WARNING**** READ AND FOLLOW ALL NOTES ON THIS DRAWING!
****IMPORTANT**** FURNISH THIS DRAWING TO ALL CONTRACTORS INCLUDING THE INSTALLERS

Trusses require extreme care in fabricating, handling, shipping, installing and bracing. Refer to and follow the latest edition of BCSI (Building Component Safety Information, by TPI and SBCA) for safety practices prior to performing these functions. Installers shall provide temporary bracing per BCSI. Unless noted otherwise,top chord shall have properly attached structural sheathing and bottom chord shall have a properly attached rigid ceiling. Locations shown for permanent lateral restraint of webs shall have bracing installed per BCSI sections B3, B7, or B10, as applicable. Apply plates to each face of truss and position as shown above and on the Joint Details, unless noted otherwise. Refer to drawings 160A-Z for standard plate positions.

Alpine, a division of ITW Building Components Group Inc. shall not be responsible for any deviation from this drawing,any failure to build the truss in conformance with ANSI/TPI 1, or for handling, shipping, installation and bracing of trusses**A seal on this drawing or cover page listing this drawing, indicates acceptance of professional engineering responsibility solely for the design shown. The suitability and use of this drawing for any structure is the responsibility of the Building Designer per ANSI/TPI 1 Sec.2.**

For more information see this job's general notes page and these web sites: ALPINE: www.alpineitw.com; TPI: www.tpinst.org; SBCA: www.sbcindustry.com; ICC: www.iccsafe.org

ALPINE
AN ITW COMPANY
6750 Forum Drive
Suite 305
Orlando FL, 32821

Job Number: 18-2262 FREEMAN **Truss Label:** H04	Ply: 1 Qty: 2	SEQN: 556495 / T44 HIPM FROM: CDM	Cust: R215 JRef: 1Wb72150004 DrwNo: 144.18.0744.19887 KM / BAF 05/24/2018

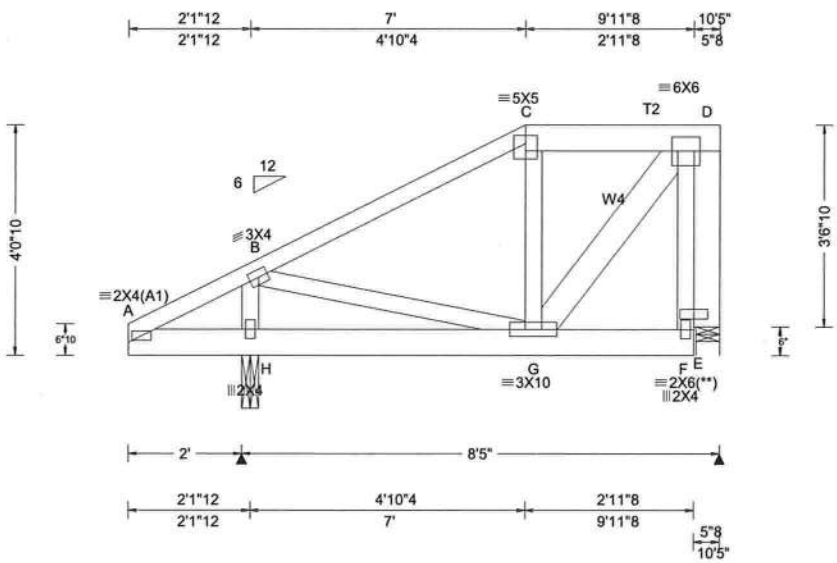

Loading Criteria (psf)
TCLL: 20.00
TCDL: 10.00
BCLL: 0.00
BCDL: 10.00
Des Ld: 40.00
NCBCLL: 10.00
Soffit: 2.00
Load Duration: 1.25
Spacing: 24.0 "

Wind Criteria
Wind Std: ASCE 7-10
Speed: 130 mph
Enclosure: Closed
Risk Category: II
EXP: C
Mean Height: 15.00 ft
TCDL: 5.0 psf
BCDL: 5.0 psf
MWFRS Parallel Dist: 0 to h/2
C&C Dist a: 3.00 ft
Loc. from endwall: not in 9.00 ft
GCpi: 0.18
Wind Duration: 1.60

Snow Criteria (Pg,Pf in PSF)
Pg: NA Ct: NA CAT: NA
Pf: NA Ce: NA
Lu: NA Cs: NA
Snow Duration: NA

Code / Misc Criteria
Bldg Code: FBC 2017 RES
TPI Std: 2014
Rep Factors Used: Yes
FT/RT:20(0)/10(0)
Plate Type(s):
WAVE

Defl/CSI Criteria

PP Deflection in	loc	L/defl	L/#
VERT(LL): 0.004	C	999	240
VERT(TL): 0.013	C	999	180
HORZ(LL): -0.001	D	-	-
HORZ(TL): 0.002	D	-	-

Creep Factor: 2.0
Max TC CSI: 0.304
Max BC CSI: 0.074
Max Web CSI: 0.124

VIEW Ver: 17.02.00.1013.16

▲ Maximum Reactions (lbs)

Loc	R	/ U	/ Rw	/ Rh	/ RL	/ W
H	634	/ 184	/ -	/ -	/ -	/ 3.5
E	524	/ 233	/ -	/ -	/ -	/ 5.0

Wind reactions based on MWFRS
H Min Brg Width Req = 1.5
E Min Brg Width Req = 5.0
Bearings H & E are a rigid surface.

Members not listed have forces less than 375#

Maximum Top Chord Forces Per Ply (lbs)

Chords	Tens.	Comp.
B - C	191	-436

Maximum Web Forces Per Ply (lbs)

Webs	Tens.	Comp.	Webs	Tens.	Comp.
H - B	217	-522	D - E	285	-536
G - D	487	-211			

Lumber
Top chord 2x4 SP #2 :T2 2x6 SP #2:
Bot chord 2x6 SP #2
Webs 2x4 SP #3 :W4 2x6 SP #2:
:Rt Bearing Leg 2x6 SP #2:

Additional Notes
The overall height of this truss excluding overhang is 4-0-10.

Special Loads
------(Lumber Dur.Fac.=1.25 / Plate Dur.Fac.=1.25)

TC: From	62 plf at	0.00 to	62 plf at	7.00
TC: From	31 plf at	7.00 to	31 plf at	10.42
BC: From	20 plf at	0.00 to	20 plf at	7.03
BC: From	10 plf at	7.03 to	10 plf at	9.96
BC: From	20 plf at	9.96 to	20 plf at	10.42

TC: 168 lb Conc. Load at 7.03
TC: 96 lb Conc. Load at 9.06
BC: 123 lb Conc. Load at 7.03
BC: 48 lb Conc. Load at 9.06

Plating Notes
(**) 1 plate(s) require special positioning. Refer to scaled plate plot details for special positioning requirements.

Purlins
In lieu of structural panels use purlins to brace all flat TC @ 24" oc.

Wind
Wind loads and reactions based on MWFRS.
Right end vertical not exposed to wind pressure.
Left cantilever is exposed to wind

WILLIAM H. KRICK
LICENSE
No. 70861
STATE OF FLORIDA
PROFESSIONAL ENGINEER

COA #0,278

05/24/2018

****WARNING**** READ AND FOLLOW ALL NOTES ON THIS DRAWING!
****IMPORTANT**** FURNISH THIS DRAWING TO ALL CONTRACTORS INCLUDING THE INSTALLERS

Trusses require extreme care in fabricating, handling, shipping, installing and bracing. Refer to and follow the latest edition of BCSI (Building Component Safety Information, by TPI and SBCA) for safety practices prior to performing these functions. Installers shall provide temporary bracing per BCSI. Unless noted otherwise,top chord shall have properly attached structural sheathing and bottom chord shall have a properly attached rigid ceiling. Locations shown for permanent lateral restraint of webs shall have bracing installed per BCSI sections B3, B7, or B10, as applicable. Apply plates to each face of truss and position as shown above and on the Joint Details, unless noted otherwise. Refer to drawings 160A-Z for standard plate positions.

Alpine, a division of ITW Building Components Group Inc. shall not be responsible for any deviation from this drawing,any failure to build the truss in conformance with ANSI/TPI 1, or for handling, shipping, installation and bracing of trusses**A seal on this drawing or cover page listing this drawing, indicates acceptance of professional engineering responsibility solely for the design shown. The suitability and use of this drawing for any structure is the responsibility of the Building Designer per ANSI/TPI 1 Sec.2.**

For more information see this job's general notes page and these web sites: ALPINE: www.alpineitw.com; TPI: www.tpinst.org; SBCA: www.sbcindustry.com; ICC: www.iccsafe.org

ALPINE
AN ITW COMPANY
6750 Forum Drive
Suite 305
Orlando FL, 32821

Job Number: 18-2262 FREEMAN **Truss Label:** J01	Ply: 1 Qty: 6	SEQN: 555989 / T75 JACK FROM: CDM	Cust: R215 JRef: 1Wb72150004 DrwNo: 144.18.0744.20807 KM / BAF 05/24/2018

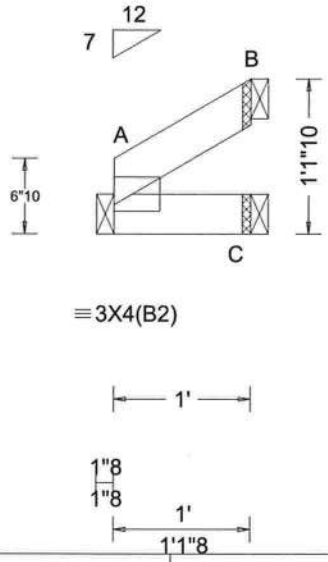

Loading Criteria (psf)	**Wind Criteria**	**Snow Criteria** (Pg,Pf in PSF)	**Defl/CSI Criteria**
TCLL: 20.00 TCDL: 10.00 BCLL: 0.00 BCDL: 10.00 Des Ld: 40.00 NCBCLL: 10.00 Soffit: 2.00 Load Duration: 1.25 Spacing: 24.0 "	Wind Std: ASCE 7-10 Speed: 130 mph Enclosure: Closed Risk Category: II EXP: C Mean Height: 15.00 ft TCDL: 5.0 psf BCDL: 5.0 psf MWFRS Parallel Dist: 0 to h/2 C&C Dist a: 3.00 ft Loc. from endwall: Any GCpi: 0.18 Wind Duration: 1.60	Pg: NA Ct: NA CAT: NA Pf: NA Ce: NA Lu: NA Cs: NA Snow Duration: NA **Code / Misc Criteria** Bldg Code: FBC 2017 RES TPI Std: 2014 Rep Factors Used: Yes FT/RT:20(0)/10(0) Plate Type(s): WAVE	PP Deflection in loc L/defl L/# VERT(LL): NA VERT(TL): NA HORZ(LL): -0.000 B - - HORZ(TL): 0.000 C - - Creep Factor: 2.0 Max TC CSI: 0.014 Max BC CSI: 0.010 Max Web CSI: 0.000 VIEW Ver: 17.02.00.1013.16

▲ Maximum Reactions (lbs)

Loc	R	/ U	/ Rw	/ Rh	/ RL	/ W
A	42	/ -	/ 26	/ -	/ 15	/ 1.5
C	20	/ -	/ 14	/ -	/ -	/ 1.5
B	30	/ 14	/ 16	/ -	/ -	/ 1.5

Wind reactions based on MWFRS

Members not listed have forces less than 375#

Lumber

Top chord 2x4 SP #2
Bot chord 2x4 SP #2

Wind

Wind loads based on MWFRS with additional C&C member design.

Additional Notes

The overall height of this truss excluding overhang is 1-1-10.

COA #0 278

05/24/2018

****WARNING**** READ AND FOLLOW ALL NOTES ON THIS DRAWING!
****IMPORTANT**** FURNISH THIS DRAWING TO ALL CONTRACTORS INCLUDING THE INSTALLERS

Trusses require extreme care in fabricating, handling, shipping, installing and bracing. Refer to and follow the latest edition of BCSI (Building Component Safety Information, by TPI and SBCA) for safety practices prior to performing these functions. Installers shall provide temporary bracing per BCSI. Unless noted otherwise,top chord shall have properly attached structural sheathing and bottom chord shall have a properly attached rigid ceiling. Locations shown for permanent lateral restraint of webs shall have bracing installed per BCSI sections B3, B7, or B10, as applicable. Apply plates to each face of truss and position as shown above and on the Joint Details, unless noted otherwise. Refer to drawings 160A-Z for standard plate positions.

Alpine, a division of ITW Building Components Group Inc. shall not be responsible for any deviation from this drawing,any failure to build the truss in conformance with ANSI/TPI 1, or for handling, shipping, installation and bracing of trusses**A seal on this drawing or cover page listing this drawing, indicates acceptance of professional engineering responsibility solely for the design shown. The suitability and use of this drawing for any structure is the responsibility of the Building Designer per ANSI/TPI 1 Sec.2.**

For more information see this job's general notes page and these web sites: ALPINE: www.alpineitw.com; TPI: www.tpinst.org; SBCA: www.sbcindustry.com; ICC: www.iccsafe.org

ALPINE
AN ITW COMPANY
6750 Forum Drive
Suite 305
Orlando FL, 32821

Job Number: 18-2262 FREEMAN **Truss Label:** J03	Ply: 1 Qty: 6	SEQN: 555987 / T74 JACK FROM: CDM	Cust: R215 JRef: 1Wb72150004 DrwNo: 144.18.0744.22060 KM / BAF 05/24/2018

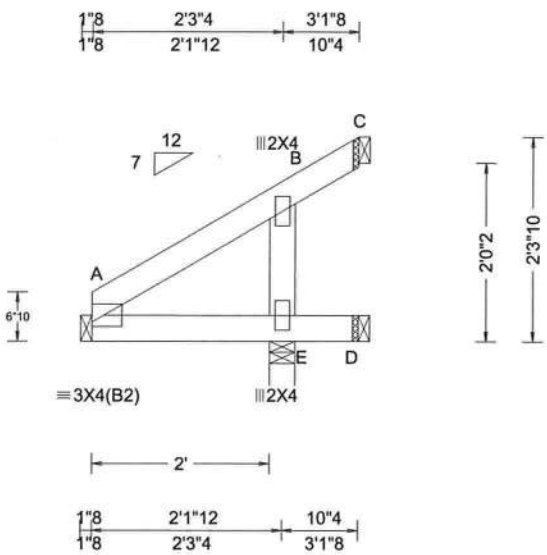

Loading Criteria (psf)	**Wind Criteria**	**Snow Criteria** (Pg,Pf in PSF)	**Defl/CSI Criteria**	**▲ Maximum Reactions (lbs)**
TCLL: 20.00 TCDL: 10.00 BCLL: 0.00 BCDL: 10.00 Des Ld: 40.00 NCBCLL: 10.00 Soffit: 2.00 Load Duration: 1.25 Spacing: 24.0 "	Wind Std: ASCE 7-10 Speed: 130 mph Enclosure: Closed Risk Category: II EXP: C Mean Height: 15.00 ft TCDL: 5.0 psf BCDL: 5.0 psf MWFRS Parallel Dist: 0 to h/2 C&C Dist a: 3.00 ft Loc. from endwall: Any GCpi: 0.18 Wind Duration: 1.60	Pg: NA Ct: NA CAT: NA Pf: NA Ce: NA Lu: NA Cs: NA Snow Duration: NA **Code / Misc Criteria** Bldg Code: FBC 2017 RES TPI Std: 2014 Rep Factors Used: Yes FT/RT:20(0)/10(0) Plate Type(s): WAVE	PP Deflection in loc L/defl L/# VERT(LL): 0.000 E 999 240 VERT(TL): 0.001 E 999 180 HORZ(LL): -0.000 B - - HORZ(TL): 0.001 B - - Creep Factor: 2.0 Max TC CSI: 0.057 Max BC CSI: 0.041 Max Web CSI: 0.035 VIEW Ver: 17.02.00.1013.16	Loc R / U / Rw / Rh / RL / W A 81 / - / 49 / - / 49 / 1.5 E 183 / 58 / 131 / - / - / 3.5 D -8 / 8 / 2 / - / - / 1.5 C 10 / 22 / 5 / - / - / 1.5 Wind reactions based on MWFRS A Min Brg Width Req = - E Min Brg Width Req = 5.0 D Min Brg Width Req = - C Min Brg Width Req = - Bearing E is a rigid surface. Members not listed have forces less than 375#

Lumber

Top chord 2x4 SP #2
Bot chord 2x4 SP #2
Webs 2x4 SP #3

Wind

Wind loads based on MWFRS with additional C&C member design.

Additional Notes

Shim all supports to solid bearing.

The overall height of this truss excluding overhang is 2-3-10.

WILLIAM H. KRICK
LICENSE
No. 70861
STATE OF FLORIDA
PROFESSIONAL ENGINEER

COA #0278

05/24/2018

****WARNING**** READ AND FOLLOW ALL NOTES ON THIS DRAWING!
****IMPORTANT**** FURNISH THIS DRAWING TO ALL CONTRACTORS INCLUDING THE INSTALLERS

Trusses require extreme care in fabricating, handling, shipping, installing and bracing. Refer to and follow the latest edition of BCSI (Building Component Safety Information, by TPI and SBCA) for safety practices prior to performing these functions. Installers shall provide temporary bracing per BCSI. Unless noted otherwise,top chord shall have properly attached structural sheathing and bottom chord shall have a properly attached rigid ceiling. Locations shown for permanent lateral restraint of webs shall have bracing installed per BCSI sections B3, B7, or B10, as applicable. Apply plates to each face of truss and position as shown above and on the Joint Details, unless noted otherwise. Refer to drawings 160A-Z for standard plate positions.

Alpine, a division of ITW Building Components Group Inc. shall not be responsible for any deviation from this drawing,any failure to build the truss in conformance with ANSI/TPI 1, or for handling, shipping, installation and bracing of trusses**A seal on this drawing or cover page listing this drawing, indicates acceptance of professional engineering responsibility solely for the design shown. The suitability and use of this drawing for any structure is the responsibility of the Building Designer per ANSI/TPI 1 Sec.2.**

For more information see this job's general notes page and these web sites: ALPINE: www.alpineitw.com; TPI: www.tpinst.org; SBCA: www.sbcindustry.com; ICC: www.iccsafe.org

ALPINE
AN ITW COMPANY
6750 Forum Drive
Suite 305
Orlando FL, 32821