ITW Building Components Group, Inc.

1950 Marley Drive Haines City, FL 33844
Florida Engineering Certificate of Authorization Number: 0 278
Florida Certificate of Product Approval # FL1999
Page 1 of 1 Document ID:1UT3215-Z0122064537

WILLIAM H. KRICK
LICENSE
No. 70861
STATE OF FLORIDA
PROFESSIONAL ENGINEER
01/22/2013

Truss Fabricator:	W.B. Howland
Job Identification:	8025-/DERRINGTON PROPERTIES /Plumb Level Construction -- LAKE CITY,
Truss Count:	48
Model Code:	Florida Building Code 2010
Truss Criteria:	FBC2010Res/TPI-2007(STD)
Engineering Software:	Alpine Software,Version 10.03.
Structural Engineer of Record:	The identity of the structural EOR did not exist as of
Address:	the seal date per section 61G15-31.003(5a) of the FAC
Minimum Design Loads:	Roof - 40.0 PSF @ 1.25 Duration
	Floor - N/A
	Wind - 130 MPH ASCE 7-10 -Closed

Notes:

1. Determination as to the suitability of these truss components for the structure is the responsibility of the building designer/engineer of record, as defined in ANSI/TPI 1
2. The drawing date shown on this index sheet must match the date shown on the individual truss component drawing.
3. As shown on attached drawings; the drawing number is preceded by: HCUSR215

William H. Krick
-Truss Design Engineer-

1950 Marley Drive
Haines City, FL 33844

Details: CNNAILSP-BRCLBSUB-

#	Ref Description	Drawing#	Date
1	76685--A	13022042	01/22/13
2	76686--A1	13022001	01/22/13
3	76687--A2	13022002	01/22/13
4	76688--A3	13022048	01/22/13
5	76689--B	13022043	01/22/13
6	76690--B1	13022003	01/22/13
7	76691--C	13022044	01/22/13
8	76692--C1	13022004	01/22/13
9	76693--C2	13022005	01/22/13
10	76694--D	13022045	01/22/13
11	76695--D1	13022006	01/22/13
12	76696--D2	13022007	01/22/13
13	76697--D3	13022008	01/22/13
14	76698--G	13022047	01/22/13
15	76699--G1	13022009	01/22/13
16	76700--G2	13022010	01/22/13
17	76701--G3	13022011	01/22/13
18	76702--G4	13022012	01/22/13
19	76703--G5	13022013	01/22/13
20	76704--G6	13022014	01/22/13
21	76705--G7	13022015	01/22/13
22	76706--G8	13022016	01/22/13
23	76707--G9	13022017	01/22/13
24	76708--G10	13022018	01/22/13
25	76709--G11	13022019	01/22/13
26	76710--G12	13022020	01/22/13
27	76711--G13	13022021	01/22/13
28	76712--G14	13022022	01/22/13
29	76713--G15	13022023	01/22/13
30	76714--G16	13022024	01/22/13
31	76715--H	13022041	01/22/13
32	76716--H1	13022035	01/22/13
33	76717--H2	13022036	01/22/13
34	76718--H3	13022037	01/22/13
35	76719--J	13022038	01/22/13
36	76720--J1	13022039	01/22/13
37	76721--J2	13022040	01/22/13
38	76722--J3	13022029	01/22/13
39	76723--J4	13022030	01/22/13
40	76724--J5	13022031	01/22/13
41	76725--J6	13022032	01/22/13
42	76726--J7	13022025	01/22/13
43	76727--J8	13022026	01/22/13
44	76728--J9	13022027	01/22/13
45	76729--J10	13022028	01/22/13
46	76730--J11	13022046	01/22/13
47	76731--J12	13022033	01/22/13
48	76732--J13	13022034	01/22/13

ALPINE

COLUMBIA COUNTY BUILDING DEPARTMENT
Received for
FILE COPY
Code Compliance
PLANS EXAMINER

(8025-/DERRINGTON PROPERTIES /Plumb Level Construction -- LAKE CITY, FL - A)

THIS DWG PREPARED FROM COMPUTER INPUT (LOADS & DIMENSIONS) SUBMITTED BY TRUSS MFR.

Top chord 2x4 SP_SS_12A :T2 2x6 SP_#2_N_12A:
Bot chord 2x6 SP_#2_N_12A
Webs 2x4 SP_#2_N__12A

Lumber grades designated with "12A" use design values approved 1/5/2012 by ALSC.

130 mph wind, 15.00 ft mean hgt, ASCE 7-10, CLOSED bldg, not located within 4.50 ft from roof edge, RISK CAT II, EXP C, wind TC DL=5.0 psf, wind BC DL=5.0 psf. GCpi(+/-)=0.18

Wind loads and reactions based on MWFRS.

In lieu of structural panels use purlins to brace all flat TC @ 24" OC.

Deflection meets L/240 live and L/180 total load. Creep increase factor for dead load is 1.50.

Special loads
------(Lumber Dur.Fac.=1.25 / Plate Dur.Fac.=1.25)

TC- From	60 plf at	-2.00 to	60 plf at	7.00
TC- From	30 plf at	7.00 to	30 plf at	14.75
TC- From	60 plf at	14.75 to	60 plf at	23.75
BC- From	4 plf at	-2.00 to	4 plf at	0.00
BC- From	20 plf at	0.00 to	20 plf at	7.03
BC- From	10 plf at	7.03 to	10 plf at	14.72
BC- From	20 plf at	14.72 to	20 plf at	21.75
BC- From	4 plf at	21.75 to	4 plf at	23.75

TC- 250.02 lb Conc. Load at 7.04,14.71
TC- 175.74 lb Conc. Load at 9.06,10.88,12.69
BC- 419.98 lb Conc. Load at 7.04,14.71
BC- 126.06 lb Conc. Load at 9.06,10.88,12.69

Bottom chord checked for 10.00 psf non-concurrent live load.

The overall height of this truss excluding overhang is 3-10-3.

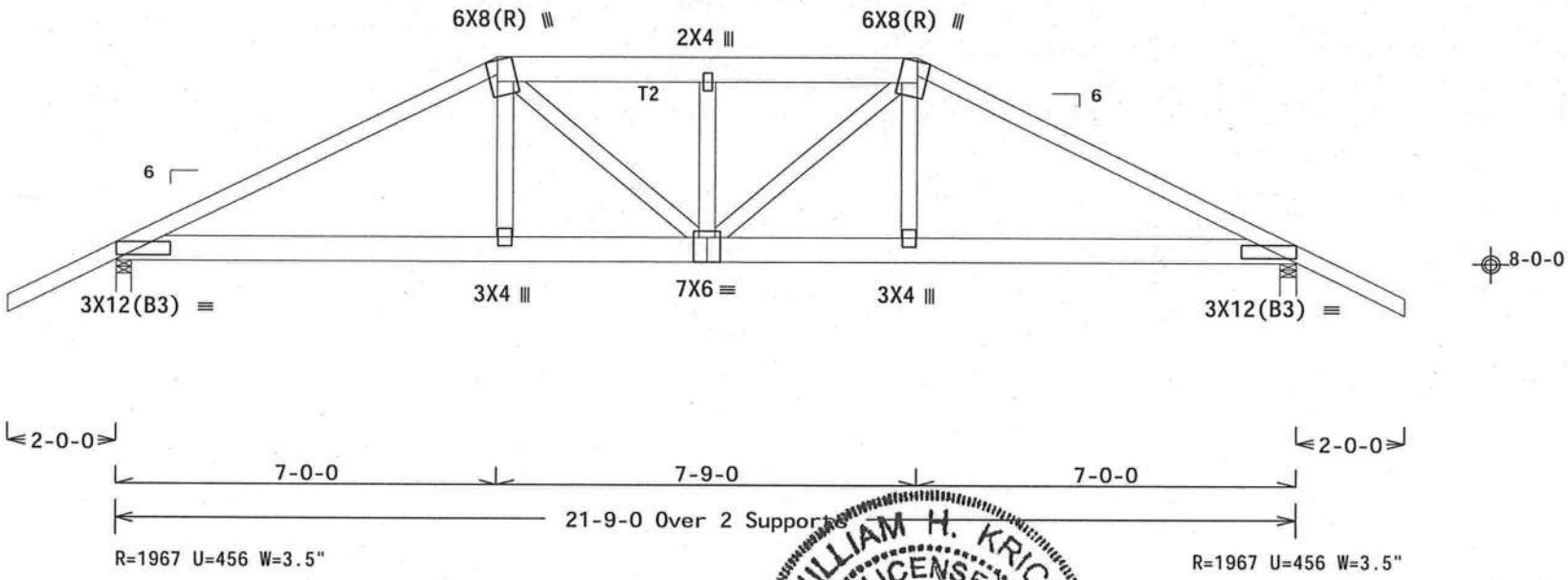

PLT TYP. Wave

Design Crit: FBC2010Res/TPI-2007(STD)
FT/RT=20%(0%)/10(0)

10.03.11.0209.20 QTY 1

FL/-/5/-/-/R/-

Scale =.3125"/Ft.

WILLIAM H. KRICK
LICENSE
No. 70861
STATE OF FLORIDA
PROFESSIONAL ENGINEER
01/22/2013

ALPINE
ITW Building Components Group Inc.
Haines City, FL 33844
FL COA #0 278

WARNING READ AND FOLLOW ALL NOTES ON THIS SHEET!
IMPORTANT FURNISH THIS DESIGN TO ALL CONTRACTORS INCLUDING INSTALLERS.

Trusses require extreme care in fabricating, handling, shipping, installing and bracing. Refer to and follow the latest edition of BCSI (Building Component Safety Information, by TPI and WTCA) for safety practices prior to performing these functions. Installers shall provide temporary bracing per BCSI. Unless noted otherwise, top chord shall have properly attached structural sheathing and bottom chord shall have a properly attached rigid ceiling. Locations shown for permanent lateral restraint of webs shall have bracing installed per BCSI sections B3, B7 or B10, as applicable.

ITW Building Components Group Inc. (ITWBCG) shall not be responsible for any deviation from this design, any failure to build the truss in conformance with ANSI/TPI 1, or for handling, shipping, installation and bracing of trusses. Apply plates to each face of truss and position as shown above and on the Joint Details, unless noted otherwise. Refer to drawings 160A-Z for standard plate positions. A seal on this drawing or cover page listing this drawing, indicates acceptance of professional engineering responsibility solely for the design shown. The suitability and use of this design for any structure is the responsibility of the Building Designer per ANSI/TPI 1 Sec.2. For more information see: This job's general notes page; ITW-BCG: www.itwbcg.com; TPI: www.tpinst.org; WTCA: www.sbcindustry.com; ICC: www.iccsafe.org

TC LL	20.0 PSF	REF	R215-- 76685
TC DL	10.0 PSF	DATE	01/22/13
BC DL	10.0 PSF	DRW	HCUSR215 13022042
BC LL	0.0 PSF	HC-ENG	KD/AP
TOT.LD.	40.0 PSF	SEQN-	362829
DUR.FAC.	1.25	FROM	CDM
SPACING	24.0"	JREF-	1UT3215_Z01

(8025-/DERRINGTON PROPERTIES /Plumb Level Construction -- LAKE CITY, FL - A1)

THIS DWG PREPARED FROM COMPUTER INPUT (LOADS & DIMENSIONS) SUBMITTED BY TRUSS MFR.

Top chord 2x4 SP_#2_N__12A
Bot chord 2x4 SP_#2_N__12A
Webs 2x4 SP_#2_N__12A

Lumber grades designated with "12A" use design values approved 1/5/2012 by ALSC.

In lieu of structural panels use purlins to brace all flat TC @ 24" OC.

The overall height of this truss excluding overhang is 4-10-3.

MWFRS loads based on trusses located at least 7.50 ft. from roof edge.

130 mph wind, 15.00 ft mean hgt, ASCE 7-10, CLOSED bldg, not located within 9.00 ft from roof edge, RISK CAT II, EXP C, wind TC DL=5.0 psf, wind BC DL=5.0 psf. GCpi(+/-)=0.18

Wind loads and reactions based on MWFRS with additional C&C member design.

Bottom chord checked for 10.00 psf non-concurrent live load.

Deflection meets L/240 live and L/180 total load. Creep increase factor for dead load is 1.50.

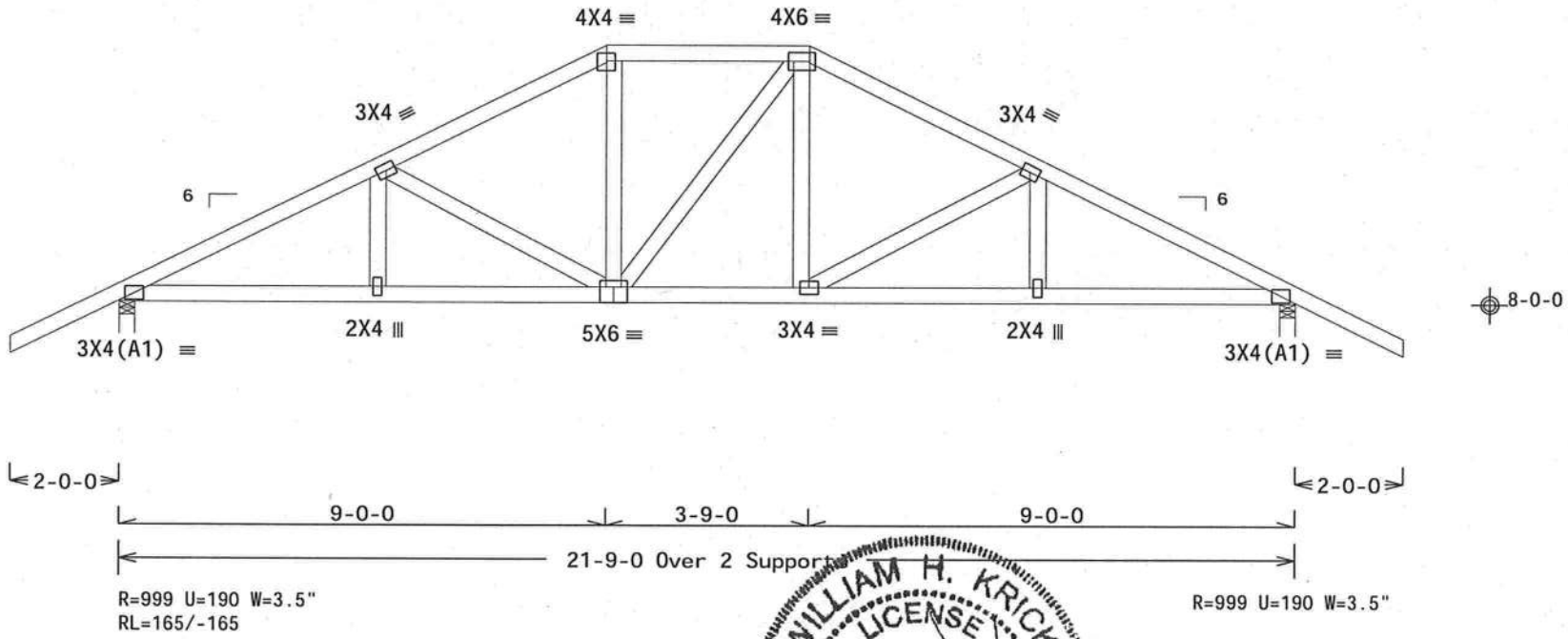

Design Crit: FBC2010Res/TPI-2007(STD)
FT/RT=20%(0%)/10(0) 10.03.11.0209.20 QTY:1 FL/-/5/-/-/R/-

PLT TYP. Wave

Scale =.3125"/Ft.

WILLIAM H. KRICK LICENSE No. 70861 STATE OF FLORIDA PROFESSIONAL ENGINEER

01/22/2013

ALPINE
ITW Building Components Group Inc.
Haines City, FL 33844
FL COA #0 278

WARNING READ AND FOLLOW ALL NOTES ON THIS SHEET!
IMPORTANT FURNISH THIS DESIGN TO ALL CONTRACTORS INCLUDING INSTALLERS.

Trusses require extreme care in fabricating, handling, shipping, installing and bracing. Refer to and follow the latest edition of BCSI (Building Component Safety Information, by TPI and WTCA) for safety practices prior to performing these functions. Installers shall provide temporary bracing per BCSI. Unless noted otherwise, top chord shall have properly attached structural sheathing and bottom chord shall have a properly attached rigid ceiling. Locations shown for permanent lateral restraint of webs shall have bracing installed per BCSI sections B3, B7 or B10, as applicable.

ITW Building Components Group Inc. (ITWBCG) shall not be responsible for any deviation from this design, any failure to build the truss in conformance with ANSI/TPI 1, or for handling, shipping, installation and bracing of trusses. Apply plates to each face of truss and position as shown above and on the Joint Details, unless noted otherwise. Refer to drawings 160A-Z for standard plate positions. A seal on this drawing or cover page listing this drawing, indicates acceptance of professional engineering responsibility solely for the design shown. The suitability and use of this design for any structure is the responsibility of the Building Designer per ANSI/TPI 1 Sec.2. For more information see: This job's general notes page; ITW-BCG: www.itwbcg.com; TPI: www.tpinst.org; WTCA: www.sbcindustry.com; ICC: www.iccsafe.org

TC LL	20.0 PSF	REF	R215-- 76686
TC DL	10.0 PSF	DATE	01/22/13
BC DL	10.0 PSF	DRW	HCUSR215 13022001
BC LL	0.0 PSF	HC-ENG	KD/AP
TOT.LD.	40.0 PSF	SEQN-	362561
DUR.FAC.	1.25	FROM	CDM
SPACING	24.0"	JREF-	1UT3215_Z01

(8025-/DERRINGTON PROPERTIES /Plumb Level Construction -- LAKE CITY, FL - A2)

THIS DWG PREPARED FROM COMPUTER INPUT (LOADS & DIMENSIONS) SUBMITTED BY TRUSS MFR.

Top chord 2x4 SP_#2_N__12A
Bot chord 2x4 SP_#2_N__12A
Webs 2x4 SP_#2_N__12A

Lumber grades designated with "12A" use design values approved 1/5/2012 by ALSC.

Bottom chord checked for 10.00 psf non-concurrent live load.

The overall height of this truss excluding overhang is 5-9-7.

130 mph wind, 15.00 ft mean hgt, ASCE 7-10, CLOSED bldg, not located within 9.00 ft from roof edge, RISK CAT II, EXP C, wind TC DL=5.0 psf, wind BC DL=5.0 psf. GCpi(+/-)=0.18

Wind loads and reactions based on MWFRS with additional C&C member design.

Deflection meets L/240 live and L/180 total load. Creep increase factor for dead load is 1.50.

MWFRS loads based on trusses located at least 7.50 ft. from roof edge.

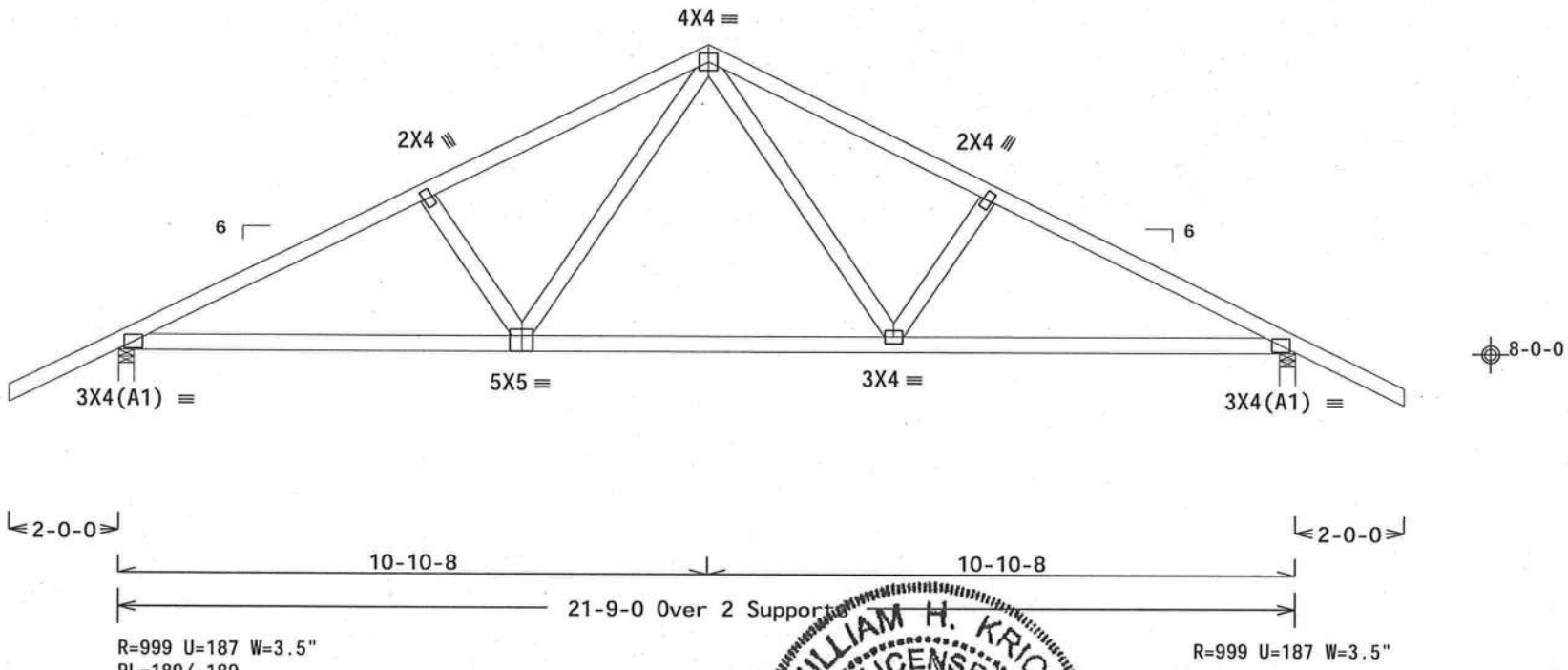

Design Crit: FBC2010Res/TPI-2007(STD)

PLT TYP. Wave

FT/RT=20%(0%)/10(0) 10.03.11.0209.20 QTY: 7 FL/-/5/-/-/R/- Scale =.3125"/Ft.

WILLIAM H. KRICK LICENSE No. 70861 STATE OF FLORIDA PROFESSIONAL ENGINEER

01/22/2013

ALPINE

ITW Building Components Group Inc.

Haines City, FL 33844
FL COA #0 278

WARNING READ AND FOLLOW ALL NOTES ON THIS SHEET!
IMPORTANT FURNISH THIS DESIGN TO ALL CONTRACTORS INCLUDING INSTALLERS.

Trusses require extreme care in fabricating, handling, shipping, installing and bracing. Refer to and follow the latest edition of BCSI (Building Component Safety Information, by TPI and WTCA) for general practices prior to performing these functions. Installers shall provide temporary bracing per BCSI. Unless noted otherwise, top chord shall have properly attached structural sheathing and bottom chord shall have a properly attached rigid ceiling. Locations shown for permanent lateral restraint of webs shall have bracing installed per BCSI sections B3, B7 or B10, as applicable.

ITW Building Components Group Inc. (ITWBCG) shall not be responsible for any deviation from this design, any failure to build the truss in conformance with ANSI/TPI 1, or for handling, shipping, installation and bracing of trusses. Apply plates to each face of truss and position as shown above and on the Joint Details, unless noted otherwise. Refer to drawings 160A-Z for standard plate positions. A seal on this drawing or cover page listing this drawing, indicates acceptance of professional engineering responsibility solely for the design shown. The suitability and use of this design for any structure is the responsibility of the Building Designer per ANSI/TPI 1 Sec.2. For more information see: This job's general notes page; ITW-BCG: www.itwbcg.com; TPI: www.tpinst.org; WTCA: www.sbcindustry.com; ICC: www.iccsafe.org

TC LL	20.0 PSF	REF	R215-- 76687
TC DL	10.0 PSF	DATE	01/22/13
BC DL	10.0 PSF	DRW	HCUSR215 13022002
BC LL	0.0 PSF	HC-ENG	KD/AP
TOT.LD.	40.0 PSF	SEQN-	362559
DUR.FAC.	1.25	FROM	CDM
SPACING	24.0"	JREF-	1UT3215_Z01

THIS DWG PREPARED FROM COMPUTER INPUT (LOADS & DIMENSIONS) SUBMITTED BY TRUSS MFR.

Top chord 2x4 SP_SS_12A
Bot chord 2x8 SP_SS_12A
Webs 2x4 SP_#2_N__12A
:Lt Wedge 2x4 SP_#2_N__12A:

Lumber grades designated with "12A" use design values approved 1/5/2012 by ALSC.

Special loads
------(Lumber Dur.Fac.=1.25 / Plate Dur.Fac.=1.25)
TC- From 60 plf at 0.00 to 60 plf at 10.88
TC- From 30 plf at 10.88 to 30 plf at 21.75
BC- From 10 plf at 0.00 to 10 plf at 21.75
BC- 1430.81 lb Conc. Load at 0.69
BC- 1426.68 lb Conc. Load at 2.69, 4.69, 6.69, 8.69 10.69,12.69
BC- 2606.00 lb Conc. Load at 14.75
BC- 743.33 lb Conc. Load at 15.81,17.81,19.81

Wind loads and reactions based on MWFRS.

This truss is not reversible. Per ANSI/TPI 1-2002, Section 2.4.3 Truss Manufacturer is responsible to provide information for proper orientation of trusses. This information shall be provided to the contractor.

2 COMPLETE TRUSSES REQUIRED

Nail Schedule:0.131"x3", min. nails
Top Chord: 1 Row @12.00" o.c.
Bot Chord: 2 Rows @ 4.50" o.c. (Each Row)
Webs : 1 Row @ 4" o.c.
Use equal spacing between rows and stagger nails in each row to avoid splitting.

Brg blocks:0.131"x3", min. nails

brg	x-loc	#blocks	length/blk	#nails/blk	wall plate
1	0.000'	1	15"	24	Rigid Surface
2	21.458'	1	12"	10	Rigid Surface

Brg block to be same size and species as chord.
Refer to drawing CNNAILSP0109 for more information.

130 mph wind, 15.00 ft mean hgt, ASCE 7-10, CLOSED bldg, Located anywhere in roof, RISK CAT II, EXP C, wind TC DL=5.0 psf, wind BC DL=5.0 psf. GCpi(+/-)=0.18

Deflection meets L/240 live and L/180 total load. Creep increase factor for dead load is 1.50.

The overall height of this truss excluding overhang is 5-9-7.

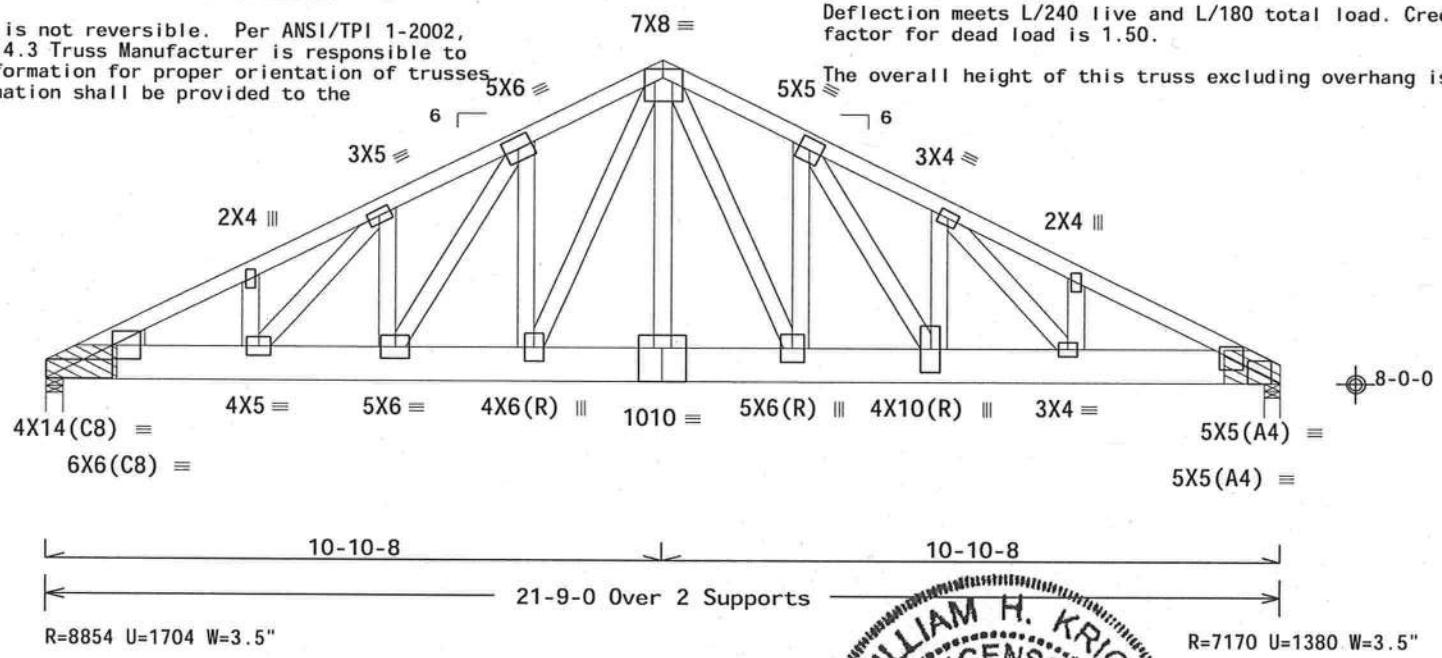

PLT TYP. Wave

Design Crit: FBC2010Res/TPI-2007(STD)
FT/RT=20%(0%)/10(0)

10.03.11.0209.20 QTY: 1 FL/-/5/-/-/R/- Scale =.3125"/Ft.

WILLIAM H. KRICK LICENSE No. 70861 STATE OF FLORIDA PROFESSIONAL ENGINEER
01/22/2013

ALPINE
ITW Building Components Group Inc.
Haines City, FL 33844
FL COA #0 278

WARNING READ AND FOLLOW ALL NOTES ON THIS SHEET!
IMPORTANT FURNISH THIS DESIGN TO ALL CONTRACTORS INCLUDING INSTALLERS.

Trusses require extreme care in fabricating, handling, shipping, installing and bracing. Refer to and follow the latest edition of BCSI (Building Component Safety Information, by TPI and WTCA) for safety practices prior to performing these functions. Installers shall provide temporary bracing per BCSI. Unless noted otherwise, top chord shall have properly attached structural sheathing and bottom chord shall have a properly attached rigid ceiling. Locations shown for permanent lateral restraint of webs shall have bracing installed per BCSI sections B3, B7 or B10, as applicable.

ITW Building Components Group Inc. (ITWBCG) shall not be responsible for any deviation from this design, any failure to build the truss in conformance with ANSI/TPI 1, or for handling, shipping, installation and bracing of trusses. Apply plates to each face of truss and position as shown above and on the Joint Details, unless noted otherwise. Refer to drawings 160A-Z for standard plate positions. A seal on this drawing or cover page listing this drawing, indicates acceptance of professional engineering responsibility solely for the design shown. The suitability and use of this design for any structure is the responsibility of the Building Designer per ANSI/TPI 1 Sec.2. For more information see: This job's general notes page; ITW-BCG: www.itwbcg.com; TPI: www.tpinst.org; WTCA: www.sbcindustry.com; ICC: www.iccsafe.org

TC LL	20.0 PSF	REF	R215-- 76688
TC DL	10.0 PSF	DATE	01/22/13
BC DL	10.0 PSF	DRW	HCUSR215 13022048
BC LL	0.0 PSF	HC-ENG	KD/AP
TOT.LD.	40.0 PSF	SEQN-	362818
DUR.FAC.	1.25	FROM	CDM
SPACING	24.0"	JREF-	1UT3215_Z01

THIS DWG PREPARED FROM COMPUTER INPUT (LOADS & DIMENSIONS) SUBMITTED BY TRUSS MFR.

Top chord 2x4 SP_#2_N__12A :T2 2x6 SP_#2_N_12A:
Bot chord 2x6 SP_#2_N_12A
Webs 2x4 SP_#2_N__12A

Lumber grades designated with "12A" use design values approved 1/5/2012 by ALSC.

130 mph wind, 15.00 ft mean hgt, ASCE 7-10, CLOSED bldg, Located anywhere in roof, RISK CAT II, EXP C, wind TC DL=5.0 psf, wind BC DL=5.0 psf. GCpi(+/-)=0.18

Wind loads and reactions based on MWFRS.

In lieu of structural panels use purlins to brace all flat TC @ 24" OC.

Deflection meets L/240 live and L/180 total load. Creep increase factor for dead load is 1.50.

Special loads
------(Lumber Dur.Fac.=1.25 / Plate Dur.Fac.=1.25)

TC- From	60 plf at	0.00 to	60 plf at	2.56		
TC- From	30 plf at	2.56 to	30 plf at	5.35		
TC- From	60 plf at	5.35 to	60 plf at	10.35		
BC- From	20 plf at	0.00 to	20 plf at	2.59		
BC- From	10 plf at	2.59 to	10 plf at	5.32		
BC- From	20 plf at	5.32 to	20 plf at	8.35		
BC- From	4 plf at	8.35 to	4 plf at	10.35		
TC- 80.76 lb Conc. Load at	2.59, 5.32					
TC- 47.85 lb Conc. Load at	3.96					
BC- 109.22 lb Conc. Load at	2.59, 5.32					
BC- 45.49 lb Conc. Load at	3.96					

Bottom chord checked for 10.00 psf non-concurrent live load.

The overall height of this truss excluding overhang is 1-10-3.

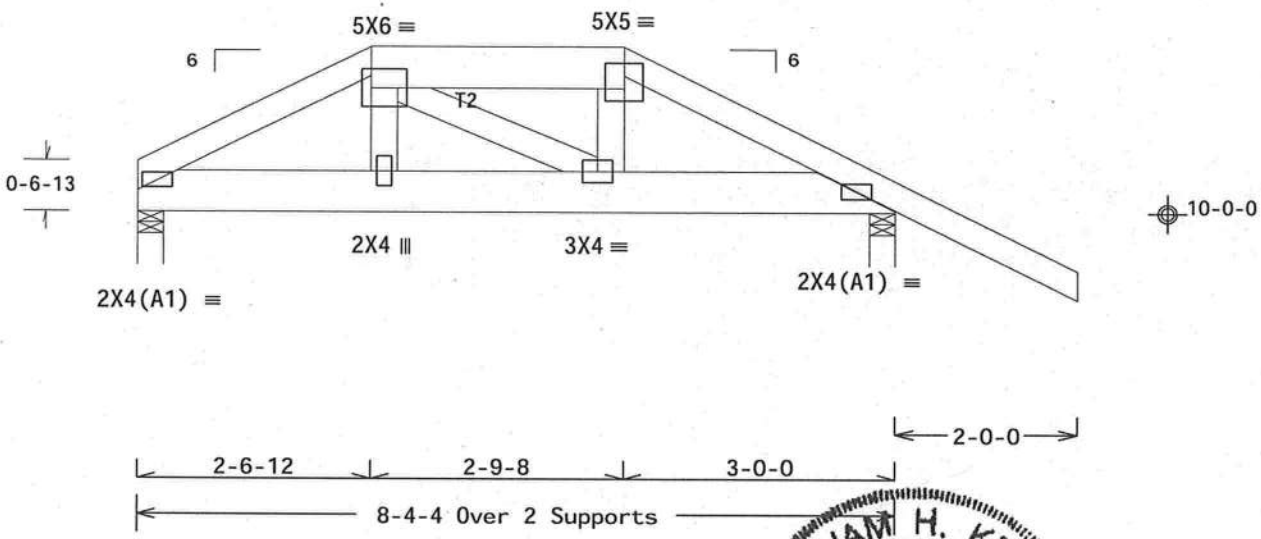

Design Crit: FBC2010Res/TPI-2007(STD)
FT/RT=20%(0%)/10(0)

PLT TYP. Wave

10.03.11.0209.20 QTY 1

FL/-/5/-/-/R/-

Scale =.5"/Ft.

WILLIAM H. KRICK LICENSE No. 70861 STATE OF FLORIDA PROFESSIONAL ENGINEER
01/22/2013

ALPINE
ITW Building Components Group Inc.
Haines City, FL 33844
FL COA #0 278

WARNING READ AND FOLLOW ALL NOTES ON THIS SHEET!
IMPORTANT FURNISH THIS DESIGN TO ALL CONTRACTORS INCLUDING INSTALLERS.

Trusses require extreme care in fabricating, handling, shipping, installing and bracing. Refer to and follow the latest edition of BCSI (Building Component Safety Information, by TPI and WTCA) for general practices prior to performing those functions. Installers shall provide temporary bracing per BCSI. Unless noted otherwise, top chord shall have properly attached structural sheathing and bottom chord shall have a properly attached rigid ceiling. Locations shown for permanent lateral restraint of webs shall have bracing installed per BCSI sections B3, B7 or B10, as applicable.

ITW Building Components Group Inc. (ITWBCG) shall not be responsible for any deviation from this design, any failure to build the truss in conformance with ANSI/TPI 1, or for handling, shipping, installation and bracing of trusses. Apply plates to each face of truss and position as shown above and on the Joint Details, unless noted otherwise. Refer to drawings 160A-Z for standard plate positions. A seal on this drawing or cover page listing this drawing, indicates acceptance of professional engineering responsibility solely for the design shown. The suitability and use of this design for any structure is the responsibility of the Building Designer per ANSI/TPI 1 Sec.2. For more information see: This job's general notes page; ITW-BCG: www.itwbcg.com; TPI: www.tpinst.org; WTCA: www.sbcindustry.com; ICC: www.iccsafe.org

TC LL	20.0 PSF	REF	R215-- 76689
TC DL	10.0 PSF	DATE	01/22/13
BC DL	10.0 PSF	DRW	HCUSR215 13022043
BC LL	0.0 PSF	HC-ENG	KD/AP
TOT.LD.	40.0 PSF	SEQN-	362653
DUR.FAC.	1.25	FROM	CDM
SPACING	24.0"	JREF-	1UT3215_Z01

(8025-/DERRINGTON PROPERTIES /Plumb Level Construction -- LAKE CITY, FL - B1)

THIS DWG PREPARED FROM COMPUTER INPUT (LOADS & DIMENSIONS) SUBMITTED BY TRUSS MFR.

Top chord 2x4 SP_#2_N__12A
Bot chord 2x4 SP_#2_N__12A

Lumber grades designated with "12A" use design values approved 1/5/2012 by ALSC.

Bottom chord checked for 10.00 psf non-concurrent live load.

The overall height of this truss excluding overhang is 2-6-9.

130 mph wind, 15.00 ft mean hgt, ASCE 7-10, CLOSED bldg, not located within 4.50 ft from roof edge, RISK CAT II, EXP C, wind TC DL=5.0 psf, wind BC DL=5.0 psf. GCpi(+/-)=0.18

Wind loads and reactions based on MWFRS with additional C&C member design.

Deflection meets L/240 live and L/180 total load. Creep increase factor for dead load is 1.50.

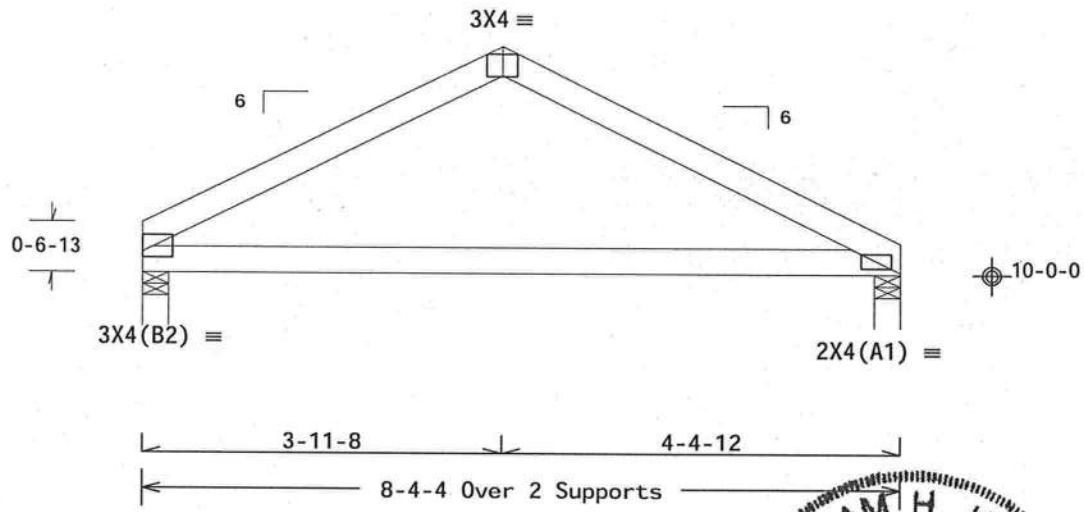

Design Crit: FBC2010Res/TPI-2007(STD)

PLT TYP. Wave

FT/RT=20%(0%)/10(0) ID.03.11.0209.20 QTY:3 FL/-/5/-/-/R/- Scale =.5"/Ft.

ALPINE
ITW Building Components Group Inc.
Haines City, FL 33844
FL COA #0 278

WARNING READ AND FOLLOW ALL NOTES ON THIS SHEET!
IMPORTANT FURNISH THIS DESIGN TO ALL CONTRACTORS INCLUDING INSTALLERS.

Trusses require extreme care in fabricating, handling, shipping, installing and bracing. Refer to and follow the latest edition of BCSI (Building Component Safety Information, by TPI and WTCA) for safety practices prior to performing these functions. Installers shall provide temporary bracing per BCSI. Unless noted otherwise, top chord shall have properly attached structural sheathing and bottom chord shall have a properly attached rigid ceiling. Locations shown for permanent lateral restraint of webs shall have bracing installed per BCSI sections B3, B7 or B10, as applicable.

ITW Building Components Group Inc. (ITWBCG) shall not be responsible for any deviation from this design, any failure to build the truss in conformance with ANSI/TPI 1, or for handling, shipping, installation and bracing of trusses. Apply plates to each face of truss and position as shown above and on the Joint Details, unless noted otherwise. Refer to drawings 160A-Z for standard plate positions. A seal on this drawing or cover page listing this drawing, indicates acceptance of professional engineering responsibility solely for the design shown. The suitability and use of this design for any structure is the responsibility of the Building Designer per ANSI/TPI 1 Sec.2. For more information see: This job's general notes page; ITW-BCG: www.itwbcg.com; TPI: www.tpinst.org; WTCA: www.sbcindustry.com; ICC: www.iccsafe.org

WILLIAM H. KRICK LICENSE No. 70861 STATE OF FLORIDA PROFESSIONAL ENGINEER

01/22/2013

TC LL	20.0 PSF	REF	R215-- 76690
TC DL	10.0 PSF	DATE	01/22/13
BC DL	10.0 PSF	DRW	HCUSR215 13022003
BC LL	0.0 PSF	HC-ENG	KD/AP
TOT.LD.	40.0 PSF	SEQN-	362650
DUR.FAC.	1.25	FROM	CDM
SPACING	24.0"	JREF-	1UT3215_Z01

(8025-/DERRINGTON PROPERTIES /Plumb Level Construction -- LAKE CITY, FL - C)

THIS DWG PREPARED FROM COMPUTER INPUT (LOADS & DIMENSIONS) SUBMITTED BY TRUSS MFR.

Top chord 2x4 SP_#2_N__12A :T2 2x6 SP_#2_N_12A:
Bot chord 2x6 SP_#2_N_12A
Webs 2x4 SP_#2_N__12A

Lumber grades designated with "12A" use design values approved 1/5/2012 by ALSC.

130 mph wind, 15.00 ft mean hgt, ASCE 7-10, CLOSED bldg, Located anywhere in roof, RISK CAT II, EXP C, wind TC DL=5.0 psf, wind BC DL=5.0 psf. GCpi(+/-)=0.18

Wind loads and reactions based on MWFRS.

In lieu of structural panels use purlins to brace all flat TC @ 24" OC.

Bottom chord checked for 10.00 psf non-concurrent live load.

The overall height of this truss excluding overhang is 1-4-3.

Special loads
------(Lumber Dur.Fac.=1.25 / Plate Dur.Fac.=1.25)
TC- From 60 plf at 0.00 to 60 plf at 2.00
TC- From 30 plf at 2.00 to 30 plf at 16.83
TC- From 60 plf at 16.83 to 60 plf at 20.83
BC- From 20 plf at 0.00 to 20 plf at 2.03
BC- From 10 plf at 2.03 to 10 plf at 16.80
BC- From 20 plf at 16.80 to 20 plf at 18.83
BC- From 4 plf at 18.83 to 4 plf at 20.83
TC- 11.41 lb Conc. Load at 2.03,16.80
TC- 2.00 lb Conc. Load at 4.06, 6.06, 8.06, 9.42 10.77,12.77,14.77
BC- 53.99 lb Conc. Load at 2.03,16.80
BC- 23.03 lb Conc. Load at 4.06, 6.06, 8.06, 9.42 10.77,12.77,14.77

Deflection meets L/240 live and L/180 total load. Creep increase factor for dead load is 1.50.

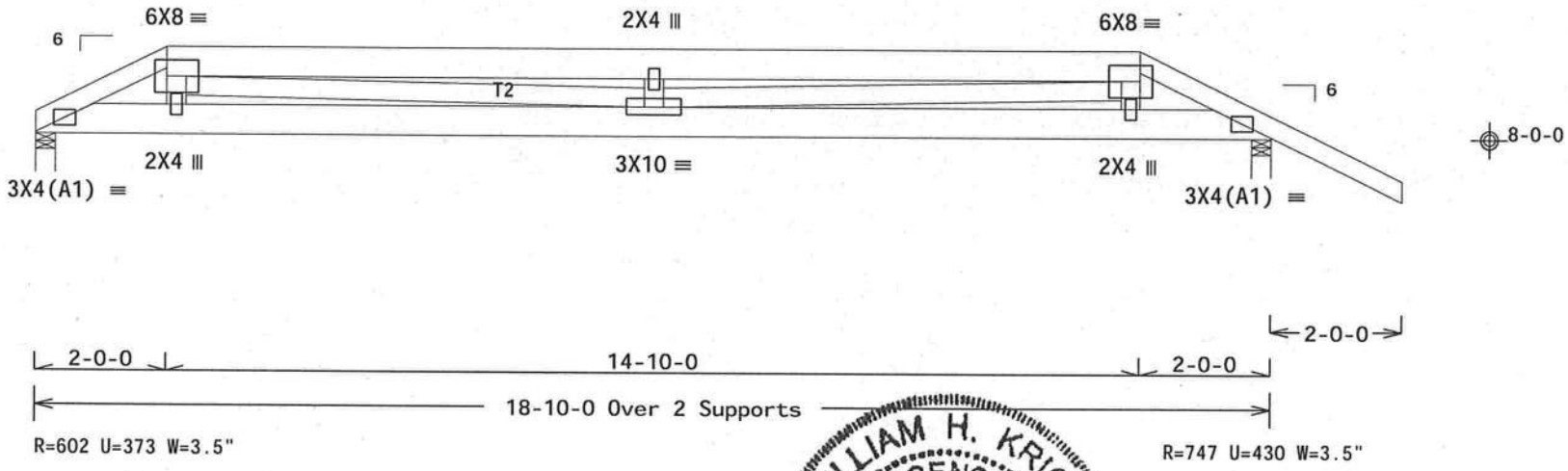

Design Crit: FBC2010Res/TPI-2007(STD)
PLT TYP. Wave FT/RT=20%(0%)/10(0) 10.03.11.0209 20 QTY:1 FL/-/5/-/-/R/- Scale =.375"/Ft.

ALPINE
ITW Building Components Group Inc.
Haines City, FL 33844
FL COA #0 278

WARNING READ AND FOLLOW ALL NOTES ON THIS SHEET!
IMPORTANT FURNISH THIS DESIGN TO ALL CONTRACTORS INCLUDING INSTALLERS.

Trusses require extreme care in fabricating, handling, shipping, installing and bracing. Refer to and follow the latest edition of BCSI (Building Component Safety Information, by TPI and WTCA) for safety practices prior to performing these functions. Installers shall provide temporary bracing per BCSI. Unless noted otherwise, top chord shall have properly attached structural sheathing and bottom chord shall have a properly attached rigid ceiling. Locations shown for permanent lateral restraint of webs shall have bracing installed per BCSI sections B3, B7 or B10, as applicable.

ITW Building Components Group Inc. (ITWBCG) shall not be responsible for any deviation from this design, any failure to build the truss in conformance with ANSI/TPI 1, or for handling, shipping, installation and bracing of trusses. Apply plates to each face of truss and position as shown above and on the Joint Details, unless noted otherwise. Refer to drawings 160A-Z for standard plate positions. A seal on this drawing or cover page listing this drawing, indicates acceptance of professional engineering responsibility solely for the design shown. The suitability and use of this design for any structure is the responsibility of the Building Designer per ANSI/TPI 1 Sec.2. For more information see: This job's general notes page; ITW-BCG: www.itwbcg.com; TPI: www.tpinst.org; WTCA: www.sbcindustry.com; ICC: www.iccsafe.org

WILLIAM H. KRICK LICENSE No 70861 STATE OF FLORIDA PROFESSIONAL ENGINEER
01/22/2013

TC LL	20.0 PSF	REF	R215-- 76691
TC DL	10.0 PSF	DATE	01/22/13
BC DL	10.0 PSF	DRW	HCUSR215 13022044
BC LL	0.0 PSF	HC-ENG	KD/AP
TOT.LD.	40.0 PSF	SEQN-	362835
DUR.FAC.	1.25	FROM	CDM
SPACING	24.0"	JREF-	1UT3215_Z01

Top chord 2x4 SP_#2_N__12A
Bot chord 2x4 SP_#2_N__12A
Webs 2x4 SP_#2_N__12A

Lumber grades designated with "12A" use design values approved 1/5/2012 by ALSC.

In lieu of structural panels use purlins to brace all flat TC @ 24" OC.

The overall height of this truss excluding overhang is 2-4-3.

130 mph wind, 15.00 ft mean hgt, ASCE 7-10, CLOSED bldg, not located within 4.50 ft from roof edge, RISK CAT II, EXP C, wind TC DL=5.0 psf, wind BC DL=5.0 psf. GCpi(+/-)=0.18

Wind loads and reactions based on MWFRS with additional C&C member design.

Bottom chord checked for 10.00 psf non-concurrent live load.

Deflection meets L/240 live and L/180 total load. Creep increase factor for dead load is 1.50.

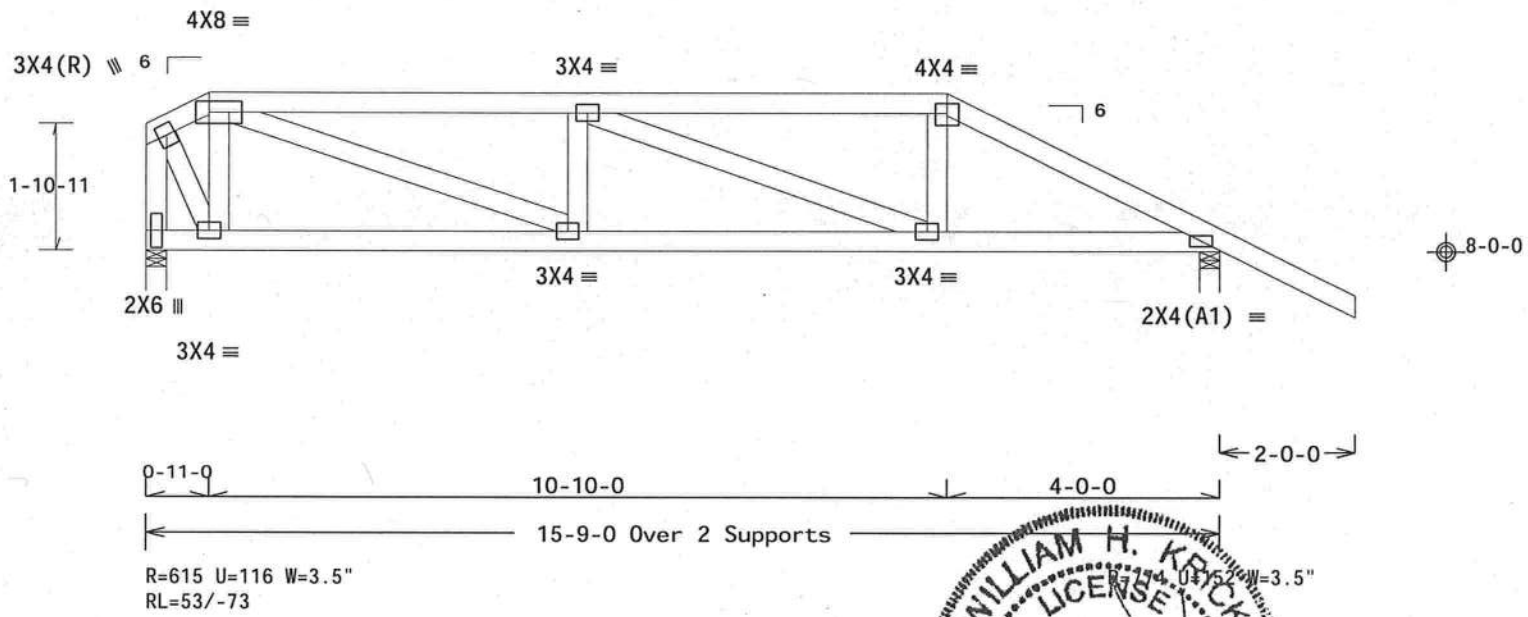

Design Crit: FBC2010Res/TPI-2007(STD)
FT/RT=20%(0%)/10(0)

PLT TYP. Wave

10.03.11.0209.20 QTY 1

FL/-/5/-/-/R/-

Scale =.375"/Ft.

WILLIAM H. KRICK
LICENSE
No. 70861
STATE OF FLORIDA
PROFESSIONAL ENGINEER
01/22/2013

ALPINE
ITW Building Components Group Inc.
Haines City, FL 33844
FL COA #0 278

WARNING READ AND FOLLOW ALL NOTES ON THIS SHEET!
IMPORTANT FURNISH THIS DESIGN TO ALL CONTRACTORS INCLUDING INSTALLERS.

Trusses require extreme care in fabricating, handling, shipping, installing and bracing. Refer to and follow the latest edition of BCSI (Building Component Safety Information, by TPI and WTCA) for general practices prior to performing these functions. Installers shall provide temporary bracing per BCSI. Unless noted otherwise, top chord shall have properly attached structural sheathing and bottom chord shall have a properly attached rigid ceiling. Locations shown for permanent lateral restraint of webs shall have bracing installed per BCSI sections B3, B7 or B10, as applicable.

ITW Building Components Group Inc. (ITWBCG) shall not be responsible for any deviation from this design, any failure to build the truss in conformance with ANSI/TPI 1, or for handling, shipping, installation and bracing of trusses. Apply plates to each face of truss and position as shown above and on the Joint Details, unless noted otherwise. Refer to drawings 160A-Z for standard plate positions. A seal on this drawing or cover page listing this drawing, indicates acceptance of professional engineering responsibility solely for the design shown. The suitability and use of this design for any structure is the responsibility of the Building Designer per ANSI/TPI 1 Sec.2. For more information see: This job's general notes page; ITW-BCG: www.itwbcg.com; TPI: www.tpinst.org; WTCA: www.sbcindustry.com; ICC: www.iccsafe.org

TC LL	20.0 PSF	REF	R215-- 76692
TC DL	10.0 PSF	DATE	01/22/13
BC DL	10.0 PSF	DRW	HCUSR215 13022004
BC LL	0.0 PSF	HC-ENG	KD/AP
TOT.LD.	40.0 PSF	SEQN-	362580
DUR.FAC.	1.25	FROM	CDM
SPACING	24.0"	JREF-	1UT3215_Z01

(8025-/DERRINGTON PROPERTIES /Plumb Level Construction -- LAKE CITY, FL - C2)

THIS DWG PREPARED FROM COMPUTER INPUT (LOADS & DIMENSIONS) SUBMITTED BY TRUSS MFR.

Top chord 2x4 SP_#2_N__12A
Bot chord 2x4 SP_#2_N__12A
Webs 2x4 SP_#2_N__12A

Lumber grades designated with "12A" use design values approved 1/5/2012 by ALSC.

In lieu of structural panels use purlins to brace all flat TC @ 24" OC.

The overall height of this truss excluding overhang is 3-3-7.

MWFRS loads based on trusses located at least 7.50 ft. from roof edge.

130 mph wind, 15.00 ft mean hgt, ASCE 7-10, CLOSED bldg, not located within 4.50 ft from roof edge, RISK CAT II, EXP C, wind TC DL=5.0 psf, wind BC DL=5.0 psf. GCpi(+/-)=0.18

Wind loads and reactions based on MWFRS with additional C&C member design.

Bottom chord checked for 10.00 psf non-concurrent live load.

Deflection meets L/240 live and L/180 total load. Creep increase factor for dead load is 1.50.

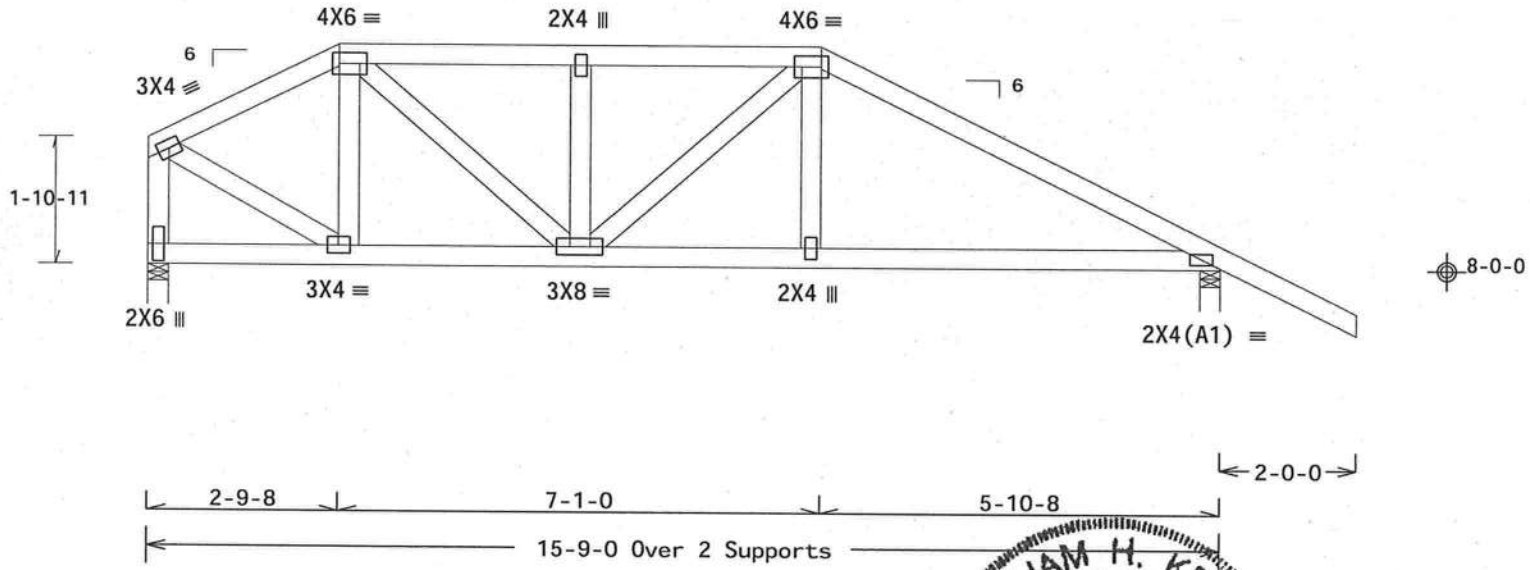

Design Crit: FBC2010Res/TPI-2007(STD)
FT/RT=20%(0%)/10(0)

PLT TYP. Wave

10.03.11.02.09.20 QTY 1

FL/-/5/-/-/R/-

Scale =.375"/Ft.

WILLIAM H. KRUCK
LICENSED
No. 70861
STATE OF FLORIDA
PROFESSIONAL ENGINEER
01/22/2013

ALPINE
ITW Building Components Group Inc.
Haines City, FL 33844
FL COA #0 278

WARNING READ AND FOLLOW ALL NOTES ON THIS SHEET!
IMPORTANT FURNISH THIS DESIGN TO ALL CONTRACTORS INCLUDING INSTALLERS.

Trusses require extreme care in fabricating, handling, shipping, installing and bracing. Refer to and follow the latest edition of BCSI (Building Component Safety Information, by TPI and WTCA) for safety practices prior to performing these functions. Installers shall provide temporary bracing per BCSI. Unless noted otherwise, top chord shall have properly attached structural sheathing and bottom chord shall have a properly attached rigid ceiling. Locations shown for permanent lateral restraint of webs shall have bracing installed per BCSI sections B3, B7 or B10, as applicable.

ITW Building Components Group Inc. (ITWBCG) shall not be responsible for any deviation from this design, any failure to build the truss in conformance with ANSI/TPI 1, or for handling, shipping, installation & bracing of trusses. Apply plates to each face of truss and position as shown above and on the Joint Details, unless noted otherwise. Refer to drawings 160A-Z for standard plate positions. A seal on this drawing or cover page listing this drawing, indicates acceptance of professional engineering responsibility solely for the design shown. The suitability and use of this design for any structure is the responsibility of the Building Designer per ANSI/TPI 1 Sec.2. For more information see: This job's general notes page; ITW-BCG: www.itwbcg.com; TPI: www.tpinst.org; WTCA: www.sbcindustry.com; ICC: www.iccsafe.org

TC LL	20.0 PSF	REF	R215-- 76693
TC DL	10.0 PSF	DATE	01/22/13
BC DL	10.0 PSF	DRW	HCUSR215 13022005
BC LL	0.0 PSF	HC-ENG	KD/AP
TOT.LD.	40.0 PSF	SEQN-	362567
DUR.FAC.	1.25	FROM	CDM
SPACING	24.0"	JREF-	1UT3215_Z01

Top chord 2x4 SP_SS_12A :T2, T3 2x6 SP_SS_12A:
Bot chord 2x6 SP_SS_12A
Webs 2x4 SP_#2_N__12A
:Lt Wedge 2x4 SP_#2_N__12A::Rt Wedge 2x4 SP_#2_N__12A:

Lumber grades designated with "12A" use design values approved 1/5/2012 by ALSC.

Brg blocks:0.131"x3", min. nails

brg	x-loc	#blocks	length/blk	#nails/blk	wall plate
1	0.000'	1	12"	5	Rigid Surface
2	37.458'	1	12"	5	Rigid Surface

Brg block to be same size and species as chord.
Refer to drawing CNNAILSP0109 for more information.

130 mph wind, 15.00 ft mean hgt, ASCE 7-10, CLOSED bldg, not located within 9.00 ft from roof edge, RISK CAT II, EXP C, wind TC DL=5.0 psf, wind BC DL=5.0 psf. GCpi(+/-)=0.18

Calculated horizontal deflection is 0.13" due to live load and 0.18" due to dead load.

Bottom chord checked for 10.00 psf non-concurrent live load.

Deflection meets L/240 live and L/180 total load. Creep increase factor for dead load is 1.50.

The overall height of this truss excluding overhang is 3-10-3.

Special loads
------(Lumber Dur.Fac.=1.25 / Plate Dur.Fac.=1.25)
TC- From 60 plf at -2.00 to 60 plf at 7.00
TC- From 30 plf at 7.00 to 30.75 plf at 30.75
TC- From 60 plf at 30.75 to 60 plf at 39.75
BC- From 4 plf at -2.00 to 4 plf at 0.00
BC- From 20 plf at 0.00 to 20 plf at 7.03
BC- From 10 plf at 7.03 to 10 plf at 30.72
BC- From 20 plf at 30.72 to 20 plf at 37.75
BC- From 4 plf at 37.75 to 4 plf at 39.75
TC- 250.02 lb Conc. Load at 7.03,30.72
TC- 175.74 lb Conc. Load at 9.06,11.06,13.06,15.06 17.06,18.88,20.69,22.69,24.69,26.69,28.69
BC- 419.98 lb Conc. Load at 7.03,30.72
BC- 126.06 lb Conc. Load at 9.06,11.06,13.06,15.06 17.06,18.88,20.69,22.69,24.69,26.69,28.69

Wind loads and reactions based on MWFRS.

(a) Continuous lateral bracing equally spaced on member.

In lieu of structural panels use purlins to brace all flat TC @ 24" OC.

Calculated vertical deflection is 0.52" due to live load and 0.77" due to dead load at X = 18-10-8.

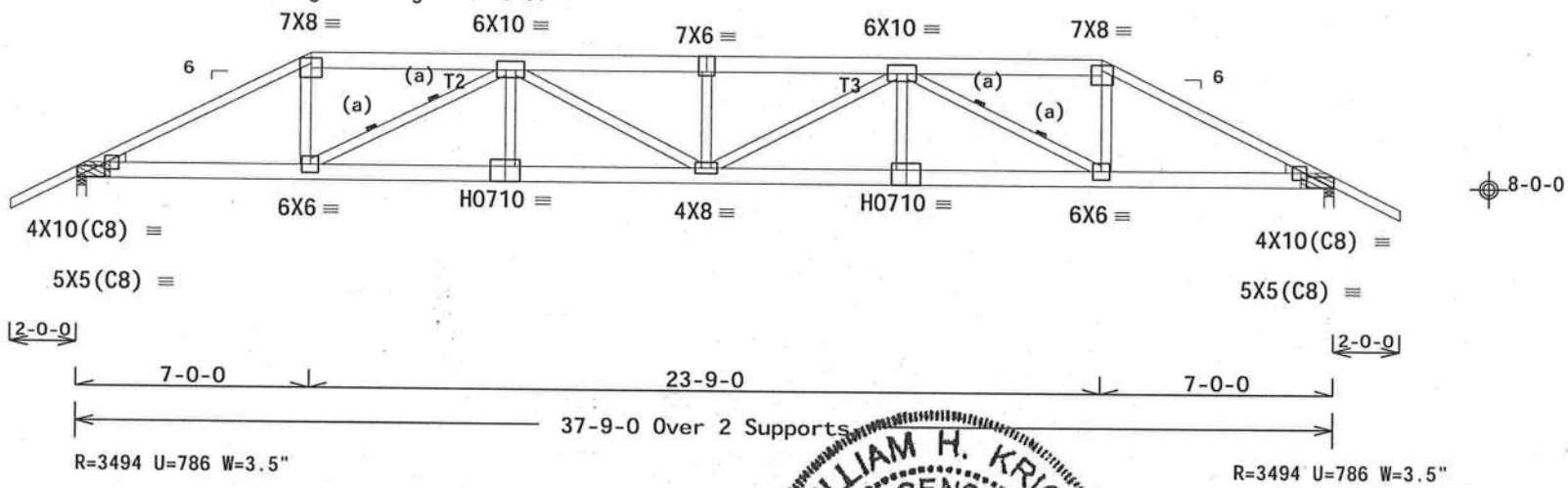

PLT TYP. 20 Gauge HS,Wave

Design Crit: FBC2010Res/TPI-2007(STD)
FT/RT=20%(0%)/10(0)

10.03.11.0209.20 OTP-1 FL/-/5/-/-/R/-

Scale =.1875"/Ft.

ALPINE
ITW Building Components Group Inc.
Haines City, FL 33844
FL COA #0 278

WARNING READ AND FOLLOW ALL NOTES ON THIS SHEET!
IMPORTANT FURNISH THIS DESIGN TO ALL CONTRACTORS INCLUDING INSTALLERS.

Trusses require extreme care in fabricating, handling, shipping, installing and bracing. Refer to and follow the latest edition of BCSI (Building Component Safety Information, by TPI and WTCA) for safety practices prior to performing these functions. Installers shall provide temporary bracing per BCSI. Unless noted otherwise, top chord shall have properly attached structural sheathing and bottom chord shall have a properly attached rigid ceiling. Locations shown for permanent lateral restraint of webs shall have bracing installed per BCSI sections B3, B7 or B10, as applicable.

ITW Building Components Group Inc. (ITWBCG) shall not be responsible for any deviation from this design, any failure to build the truss in conformance with ANSI/TPI 1, or for handling, shipping, installation and bracing of trusses. Apply plates to each face of truss and position as shown above and on the Joint Details, unless noted otherwise. Refer to drawings 160A-Z for standard plate positions. A seal on this drawing or cover page listing this drawing, indicates acceptance of professional engineering responsibility solely for the design shown. The suitability and use of this design for any structure is the responsibility of the Building Designer per ANSI/TPI 1 Sec.2. For more information see: This job's general notes page; ITW-BCG: www.itwbcg.com; TPI: www.tpinst.org; WTCA: www.sbcindustry.com; ICC: www.iccsafe.org

WILLIAM H. KRICK
LICENSE
No. 70861
STATE OF FLORIDA
PROFESSIONAL ENGINEER
01/22/2013

TC LL	20.0 PSF	REF	R215-- 76694
TC DL	10.0 PSF	DATE	01/22/13
BC DL	10.0 PSF	DRW	HCUSR215 13022045
BC LL	0.0 PSF	HC-ENG	KD/AP
TOT.LD.	40.0 PSF	SEQN-	362601
DUR.FAC.	1.25	FROM	CDM
SPACING	24.0"	JREF-	1UT3215_Z01

(8025-/DERRINGTON PROPERTIES /Plumb Level Construction -- LAKE CITY, FL - D1)

THIS DWG PREPARED FROM COMPUTER INPUT (LOADS & DIMENSIONS) SUBMITTED BY TRUSS MFR.

Top chord 2x4 SP_#2_N__12A
Bot chord 2x4 SP_#2_N__12A
Webs 2x4 SP_#2_N__12A

Lumber grades designated with "12A" use design values approved 1/5/2012 by ALSC.

In lieu of structural panels use purlins to brace all flat TC @ 24" OC.

The overall height of this truss excluding overhang is 4-10-3.

MWFRS loads based on trusses located at least 7.50 ft. from roof edge.

130 mph wind, 15.00 ft mean hgt, ASCE 7-10, CLOSED bldg, not located within 9.00 ft from roof edge, RISK CAT II, EXP C, wind TC DL=5.0 psf, wind BC DL=5.0 psf. GCpi(+/-)=0.18

Wind loads and reactions based on MWFRS with additional C&C member design.

Bottom chord checked for 10.00 psf non-concurrent live load.

Deflection meets L/240 live and L/180 total load. Creep increase factor for dead load is 1.50.

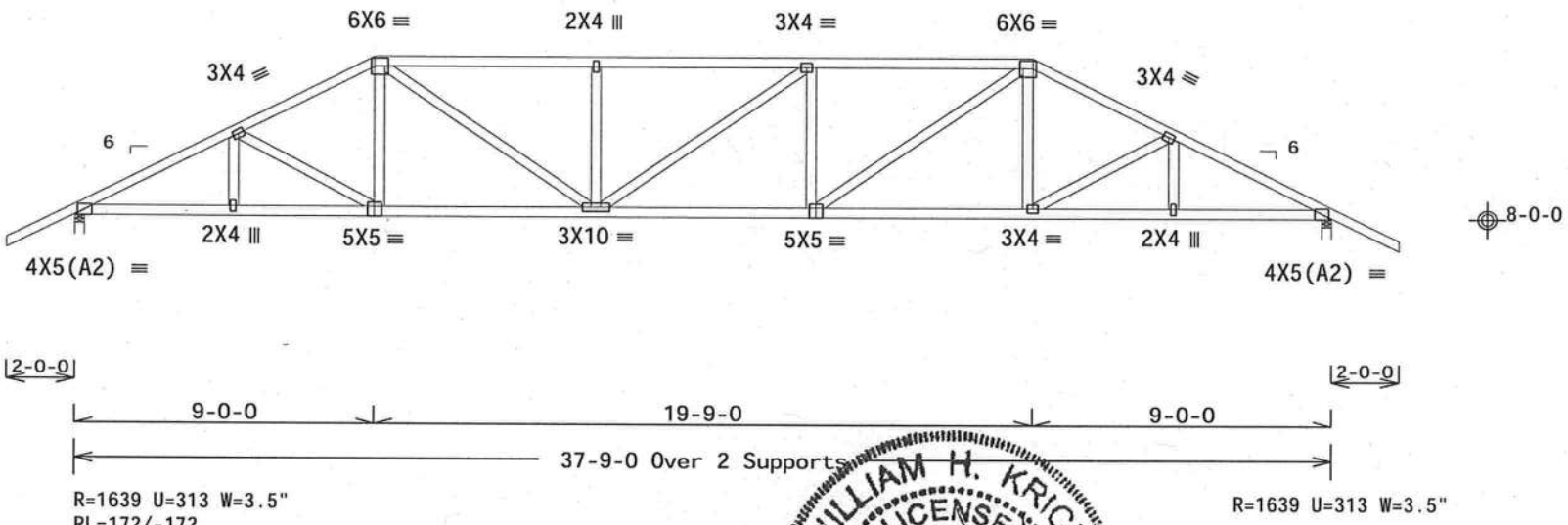

PLT TYP. Wave

Design Crit: FBC2010Res/TPI-2007(STD)
FT/RT=20%(0%)/10(0)

10.03.11.0209.20 QTY: 1

FL/-/5/-/-/R/-

Scale =.1875"/Ft.

WILLIAM H. KRICK
LICENSE
No. 70861
STATE OF FLORIDA
PROFESSIONAL ENGINEER

01/22/2013

ALPINE
ITW Building Components Group Inc.
Haines City, FL 33844
FL COA #0 278

WARNING READ AND FOLLOW ALL NOTES ON THIS SHEET!
IMPORTANT FURNISH THIS DESIGN TO ALL CONTRACTORS INCLUDING INSTALLERS.

Trusses require extreme care in fabricating, handling, shipping, installing and bracing. Refer to and follow the latest edition of BCSI (Building Component Safety Information, by TPI and WTCA) for handling practices prior to performing these functions. Installers shall provide temporary bracing per BCSI. Unless noted otherwise, top chord shall have properly attached structural sheathing and bottom chord shall have a properly attached rigid ceiling. Locations shown for permanent lateral restraint of webs shall have bracing installed per BCSI sections B3, B7 or B10, as applicable.

ITW Building Components Group Inc. (ITWBCG) shall not be responsible for any deviation from this design, any failure to build the truss in conformance with ANSI/TPI 1, or for handling, shipping, installation and bracing of trusses. Apply plates to each face of truss and position as shown above and on the Joint Details, unless noted otherwise. Refer to drawings 160A-Z for standard plate positions. A seal on this drawing or cover page listing this drawing, indicates acceptance of professional engineering responsibility solely for the design shown. The suitability and use of this design for any structure is the responsibility of the Building Designer per ANSI/TPI 1 Sec.2. For more information see: This job's general notes page; ITW-BCG: www.itwbcg.com; TPI: www.tpinst.org; WTCA: www.sbcindustry.com; ICC: www.iccsafe.org

TC LL	20.0 PSF	REF	R215-- 76695
TC DL	10.0 PSF	DATE	01/22/13
BC DL	10.0 PSF	DRW	HCUSR215 13022006
BC LL	0.0 PSF	HC-ENG	KD/AP
TOT.LD.	40.0 PSF	SEQN-	362584
DUR.FAC.	1.25	FROM	CDM
SPACING	24.0"	JREF-	1UT3215_Z01

(8025-/DERRINGTON PROPERTIES /Plumb Level Construction -- LAKE CITY, FL - D2)

THIS DWG PREPARED FROM COMPUTER INPUT (LOADS & DIMENSIONS) SUBMITTED BY TRUSS MFR.

Top chord 2x4 SP_#2_N__12A
Bot chord 2x4 SP_#2_N__12A
Webs 2x4 SP_#2_N__12A

Lumber grades designated with "12A" use design values approved 1/5/2012 by ALSC.

In lieu of structural panels use purlins to brace all flat TC @ 24" OC.

The overall height of this truss excluding overhang is 5-10-3.

MWFRS loads based on trusses located at least 7.50 ft. from roof edge.

130 mph wind, 15.00 ft mean hgt, ASCE 7-10, CLOSED bldg, not located within 9.00 ft from roof edge, RISK CAT II, EXP C, wind TC DL=5.0 psf, wind BC DL=5.0 psf. GCpi(+/-)=0.18

Wind loads and reactions based on MWFRS with additional C&C member design.

Bottom chord checked for 10.00 psf non-concurrent live load.

Deflection meets L/240 live and L/180 total load. Creep increase factor for dead load is 1.50.

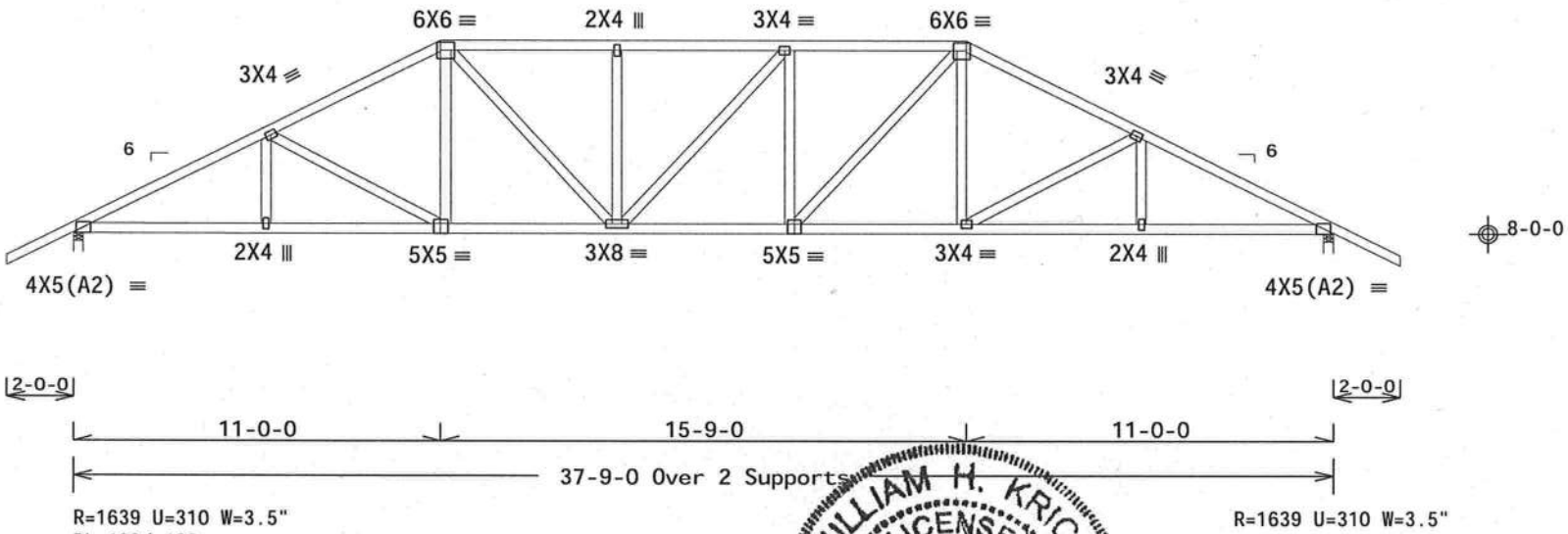

Design Crit: FBC2010Res/TPI-2007(STD)
FT/RT=20%(0%)/10(0)

PLT TYP. Wave

10.03.11.0209.20 QTY 1

FL/-/5/-/-/R/-

Scale =.1875"/Ft.

WILLIAM H. KRICK
LICENSE
No. 70861
STATE OF FLORIDA
PROFESSIONAL ENGINEER
01/22/2013

ALPINE
ITW Building Components Group Inc.
Haines City, FL 33844
FL COA #0 278

WARNING READ AND FOLLOW ALL NOTES ON THIS SHEET!
IMPORTANT FURNISH THIS DESIGN TO ALL CONTRACTORS INCLUDING INSTALLERS.

Trusses require extreme care in fabricating, handling, shipping, installing and bracing. Refer to and follow the latest edition of BCSI (Building Component Safety Information, by TPI and WTCA) for general practices prior to performing these functions. Installers shall provide temporary bracing per BCSI. Unless noted otherwise, top chord shall have property attached structural sheathing and bottom chord shall have a properly attached rigid ceiling. Locations shown for permanent lateral restraint of webs shall have bracing installed per BCSI sections B3, B7 or B10, as applicable.

ITW Building Components Group Inc. (ITWBCG) shall not be responsible for any deviation from this design, any failure to build the truss in conformance with ANSI/TPI 1, or for handling, shipping, installation & bracing of trusses. Apply plates to each face of truss and position as shown above and on the Joint Details, unless noted otherwise. Refer to drawings 160A-Z for standard plate positions. A seal on this drawing or cover page listing this drawing, indicates acceptance of professional engineering responsibility solely for the design shown. The suitability and use of this design for any structure is the responsibility of the Building Designer per ANSI/TPI 1 Sec.2. For more information see: This job's general notes page; ITW-BCG: www.itwbcg.com; TPI: www.tpinst.org; WTCA: www.sbcindustry.com; ICC: www.iccsafe.org

TC LL	20.0 PSF	REF	R215-- 76696
TC DL	10.0 PSF	DATE	01/22/13
BC DL	10.0 PSF	DRW	HCUSR215 13022007
BC LL	0.0 PSF	HC-ENG	KD/AP
TOT.LD.	40.0 PSF	SEQN-	362582
DUR.FAC.	1.25	FROM	CDM
SPACING	24.0"	JREF-	1UT3215_Z01

THIS DWG PREPARED FROM COMPUTER INPUT (LOADS & DIMENSIONS) SUBMITTED BY TRUSS MFR.

Top chord 2x4 SP_#2_N__12A
Bot chord 2x4 SP_#2_N__12A
Webs 2x4 SP_#2_N__12A

Lumber grades designated with "12A" use design values approved 1/5/2012 by ALSC.

In lieu of structural panels use purlins to brace all flat TC @ 24" OC.

The overall height of this truss excluding overhang is 6-8-7.

MWFRS loads based on trusses located at least 7.50 ft. from roof edge.

130 mph wind, 15.00 ft mean hgt, ASCE 7-10, CLOSED bldg, not located within 9.00 ft from roof edge, RISK CAT II, EXP C, wind TC DL=5.0 psf, wind BC DL=5.0 psf. GCpi(+/-)=0.18

Wind loads and reactions based on MWFRS with additional C&C member design.

Bottom chord checked for 10.00 psf non-concurrent live load.

Deflection meets L/240 live and L/180 total load. Creep increase factor for dead load is 1.50.

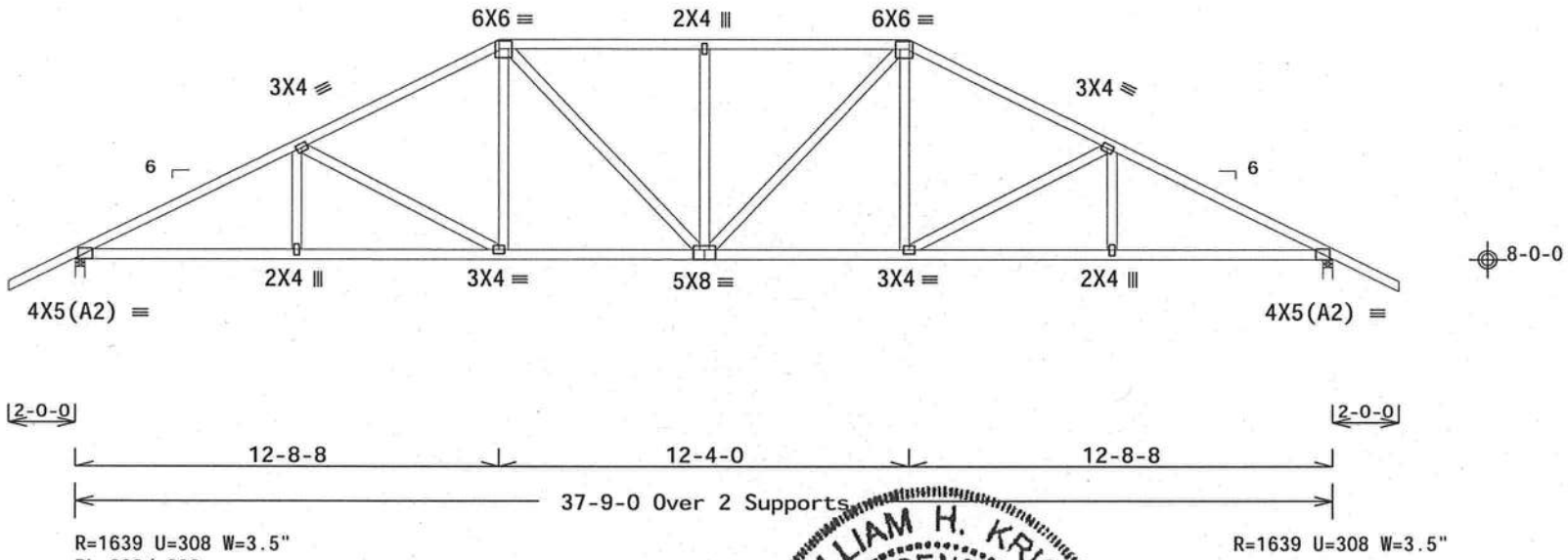

Design Crit: FBC2010Res/TPI-2007(STD)

PLT TYP. Wave — FT/RT=20%(0%)/10(0) — 10.03.11.0209 20 — QTY:1 — FL/-/5/-/-/R/- — Scale =.1875"/Ft.

WILLIAM H. KRICK LICENSE No. 70861 STATE OF FLORIDA PROFESSIONAL ENGINEER

01/22/2013

ALPINE
ITW Building Components Group Inc.
Haines City, FL 33844
FL COA #0 278

WARNING READ AND FOLLOW ALL NOTES ON THIS SHEET!
IMPORTANT FURNISH THIS DESIGN TO ALL CONTRACTORS INCLUDING INSTALLERS.

Trusses require extreme care in fabricating, handling, shipping, installing and bracing. Refer to and follow the latest edition of BCSI (Building Component Safety Information, by TPI and WTCA) for safety practices prior to performing these functions. Installers shall provide temporary bracing per BCSI. Unless noted otherwise, top chord shall have properly attached structural sheathing and bottom chord shall have a properly attached rigid ceiling. Locations shown for permanent lateral restraint of webs shall have bracing installed per BCSI sections B3, B7 or B10, as applicable.

ITW Building Components Group Inc. (ITWBCG) shall not be responsible for any deviation from this design, any failure to build the truss in conformance with ANSI/TPI 1, or for handling, shipping, installation and bracing of trusses. Apply plates to each face of truss and position as shown above and on the Joint Details, unless noted otherwise. Refer to drawings 160A-Z for standard plate positions. A seal on this drawing or cover page listing this drawing, indicates acceptance of professional engineering responsibility solely for the design shown. The suitability and use of this design for any structure is the responsibility of the Building Designer per ANSI/TPI 1 Sec.2. For more information see: This job's general notes page; ITW-BCG: www.itwbcg.com; TPI: www.tpinst.org; WTCA: www.sbcindustry.com; ICC: www.iccsafe.org

TC LL	20.0 PSF	REF	R215-- 76697
TC DL	10.0 PSF	DATE	01/22/13
BC DL	10.0 PSF	DRW	HCUSR215 13022008
BC LL	0.0 PSF	HC-ENG	KD/AP
TOT.LD.	40.0 PSF	SEQN-	362589
DUR.FAC.	1.25	FROM	CDM
SPACING	24.0"	JREF-	1UT3215_Z01

Top chord 2x4 SP_#2_N__12A :T1 2x4 SP_SS_12A:
:T2 2x6 SP_#2_N_12A:
Bot chord 2x6 SP_#2_N_12A :B2 2x6 SP_SS_12A:
Webs 2x4 SP_#2_N__12A :W12 2x4 SP_SS_12A:

Lumber grades designated with "12A" use design values approved 1/5/2012 by ALSC.

Special loads
------(Lumber Dur.Fac.=1.25 / Plate Dur.Fac.=1.25)

TC- From	60 plf at	-2.00 to	60 plf at	7.00	
TC- From	30 plf at	7.00 to	30 plf at	17.21	
TC- From	60 plf at	17.21 to	60 plf at	24.33	
TC- From	60 plf at	24.33 to	60 plf at	26.63	
TC- From	60 plf at	26.63 to	60 plf at	28.92	
TC- From	60 plf at	28.92 to	60 plf at	35.92	
BC- From	4 plf at	-2.00 to	4 plf at	0.00	
BC- From	20 plf at	0.00 to	20 plf at	5.35	
BC- From	10 plf at	5.35 to	10 plf at	17.21	
BC- From	20 plf at	17.21 to	20 plf at	19.85	
BC- From	20 plf at	19.85 to	20 plf at	26.63	
BC- From	20 plf at	26.63 to	20 plf at	35.92	
TC- 181.64 lb Conc. Load at 7.03					
TC- 191.23 lb Conc. Load at 9.06,11.06,13.06,15.06					
TC- 186.92 lb Conc. Load at 15.80					
BC- 501.84 lb Conc. Load at 7.03					
BC- 103.02 lb Conc. Load at 9.06,11.06,13.06,15.06					
BC- 130.00 lb Conc. Load at 15.80					
BC- 1371.00 lb Conc. Load at 17.27					

In lieu of structural panels use purlins to brace all flat TC @ 24" OC.

Calculated vertical deflection is 0.46" due to live load and 0.68" due to dead load at X = 15-8-0.

2 COMPLETE TRUSSES REQUIRED

Nail Schedule:0.131"x3", min. nails
Top Chord: 1 Row @12.00" o.c.
Bot Chord: 1 Row @12.00" o.c.
Webs : 1 Row @ 4" o.c.
Use equal spacing between rows and stagger nails in each row to avoid splitting.

*** WARNING! Reaction exceeds allowable ***

(**) 2 plate(s) require special positioning. Refer to scaled plate plot details for special positioning requirements.

130 mph wind, 15.00 ft mean hgt, ASCE 7-10, CLOSED bldg, Located anywhere in roof, RISK CAT II, EXP C, wind TC DL=5.0 psf, wind BC DL=5.0 psf. GCpi(+/-)=0.18

Wind loads and reactions based on MWFRS.

Right end vertical not exposed to wind pressure.

Calculated horizontal deflection is 0.13" due to live load and 0.19" due to dead load.

These support conditions used at bearings indicated
(H1) = ITW (KC) HDTP28-2 w/ (2)2x8 SP_SS_12A supporting member.
Supported Member Face: (8) 0.128"x3" nails
Supporting Member Face: (22) 0.128"x3" nails

Bottom chord checked for 10.00 psf non-concurrent live load.

Deflection meets L/240 live and L/180 total load. Creep increase factor for dead load is 1.50.

The overall height of this truss excluding overhang is 4-10-3.

NOTE: LATERALLY BRACE BOTTOM CHORD ABOVE FILLER AT 2'0" O.C. MAX. INCLUDING A LATERAL BRACE AT CHORD ENDS.

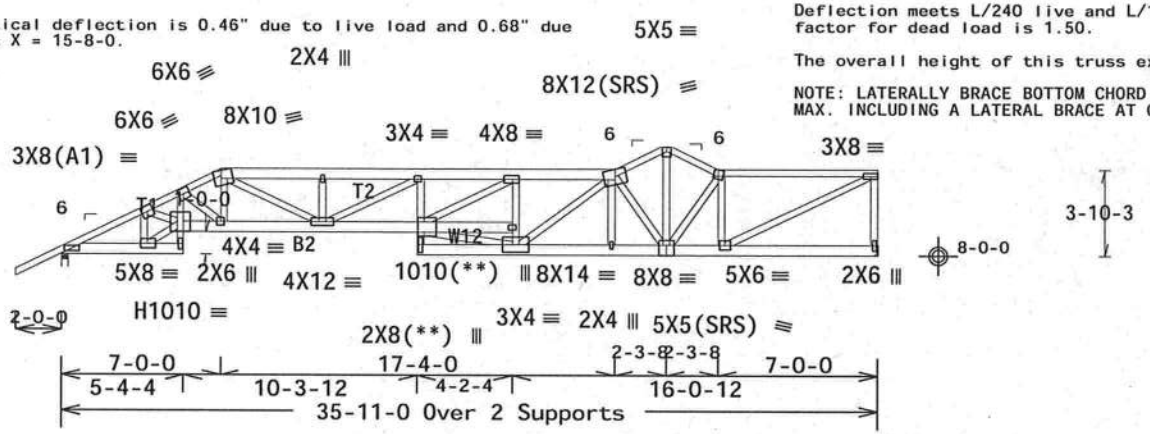

R=3520 U=678 W=3.5"

R=2606 U=802 H=ITW (KC) HDTP28-2
Supported Member Face: (8) 0.128"x3" nails
Supporting Member Face: (22) 0.128"x3" nails
Supporting Member: (2) 2x8 SP_SS_12A

Design Crit: FBC2010Res/TPI-2007(STD)

PLT TYP. 20 Gauge HS,Wave FT/RT=20%(0%)/10(0) 10.03.11.0209.20 QTY: 1 FL/-/5/-/-/R/- Scale =.125"/Ft.

WILLIAM H. HAGE JR. LICENSED STATE OF FLORIDA No. 70861 PROFESSIONAL ENGINEER 01/22/2013

ALPINE
ITW Building Components Group Inc.
Haines City, FL 33844
FL COA #0 278

WARNING READ AND FOLLOW ALL NOTES ON THIS SHEET!
IMPORTANT FURNISH THIS DESIGN TO ALL CONTRACTORS INCLUDING INSTALLERS.

Trusses require extreme care in fabricating, handling, shipping, installing and bracing. Refer to and follow the latest edition of BCSI (Building Component Safety Information, by TPI and WTCA) for safety practices prior to performing these functions. Installers shall provide temporary bracing per BCSI. Unless noted otherwise, top chord shall have properly attached structural sheathing and bottom chord shall have a properly attached rigid ceiling. Locations shown for permanent lateral restraint of webs shall have bracing installed per BCSI sections B3, B7 or B10, as applicable.

ITW Building Components Group Inc. (ITWBCG) shall not be responsible for any deviation from this design, any failure to build the truss in conformance with ANSI/TPI 1, or for handling, shipping, installation and bracing of trusses. Apply plates to each face of truss and position as shown above and on the Joint Details, unless noted otherwise. Refer to drawings 160A-Z for standard plate positions. A seal on this drawing or cover page listing this drawing, indicates acceptance of professional engineering responsibility solely for the design shown. The suitability and use of this design for any structure is the responsibility of the Building Designer per ANSI/TPI 1 Sec.2. For more information see: This job's general notes page: ITW-BCG: www.itwbcg.com; TPI: www.tpinst.org; WTCA: www.sbcindustry.com; ICC: www.iccsafe.org

TC LL	20.0 PSF	REF	R215-- 76698
TC DL	10.0 PSF	DATE	01/22/13
BC DL	10.0 PSF	DRW	HCUSR215 13022047
BC LL	0.0 PSF	HC-ENG	KD/AP
TOT.LD.	40.0 PSF	SEQN-	362815
DUR.FAC.	1.25	FROM	CDM
SPACING	24.0"	JREF-	1UT3215_Z01

Top chord 2x4 SP_SS_12A :T1 2x4 SP_#2_N__12A:
Bot chord 2x4 SP_#2_N__12A :B2 2x4 SP_SS_12A:
Webs 2x4 SP_#2_N__12A :W4 2x4 SP_SS_12A:

Lumber grades designated with "12A" use design values approved 1/5/2012 by ALSC.

These support conditions used at bearings indicated
(H1) = ITW (KC) ATH29 w/ (2)2x8 SP_SS_12A supporting member.
Supported Member Face: (4) 0.131"x1.5" nails
Supporting Member Face: (8) 0.128"x3" nails
Supporting Member Top: (4) 0.128"x3" nails

Bottom chord checked for 10.00 psf non-concurrent live load.

Deflection meets L/240 live and L/180 total load. Creep increase factor for dead load is 1.50.

(I) - plates so marked were sized using a Fabrication Tolerance of 0% and a Rotational Tolerance of 0 degrees.

130 mph wind, 15.00 ft mean hgt, ASCE 7-10, CLOSED bldg, not located within 9.00 ft from roof edge, RISK CAT II, EXP C, wind TC DL=5.0 psf, wind BC DL=5.0 psf. GCpi(+/-)=0.18

Wind loads and reactions based on MWFRS with additional C&C member design.

Right end vertical not exposed to wind pressure.

In lieu of structural panels use purlins to brace all flat TC @ 24" OC.

The overall height of this truss excluding overhang is 4-10-3.

MWFRS loads based on trusses located at least 7.50 ft. from roof edge.

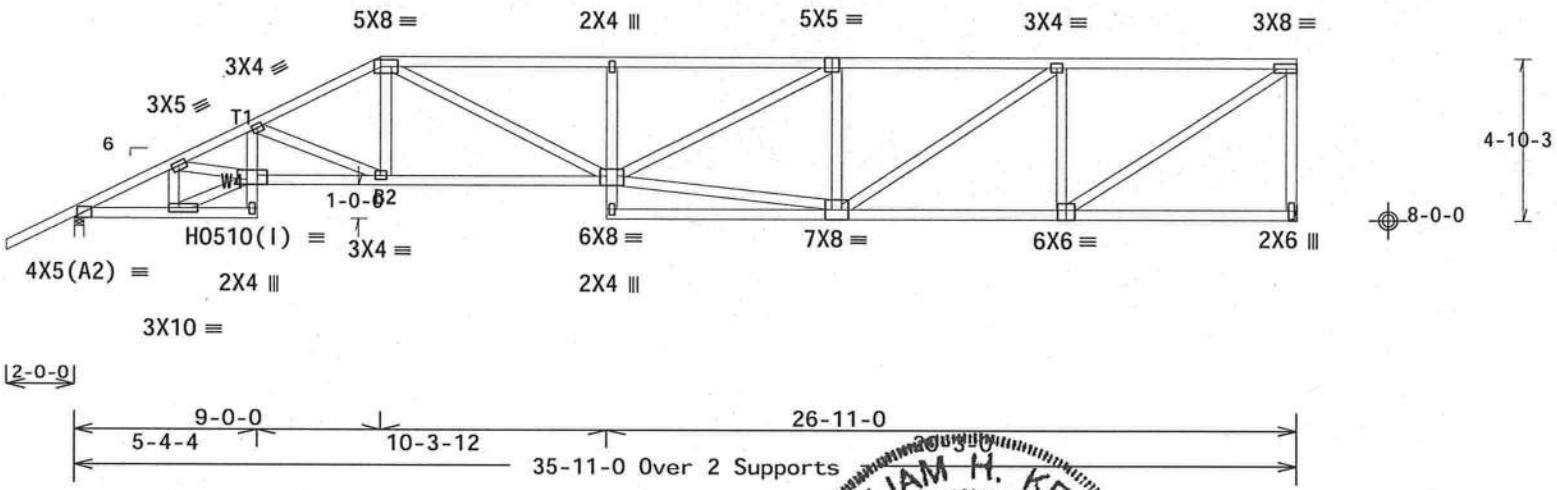

Design Crit: FBC2010Res/TPI-2007(STD)

PLT TYP. 20 Gauge HS,Wave FT/RT=20%(0%)/10(0) 10.03.11.0209.20 QTY 1 FL/-/5/-/-/R/- Scale =.1875"/Ft.

WILLIAM H. KRICK LICENSE No. 70861 STATE OF FLORIDA PROFESSIONAL ENGINEER

01/22/2013

ALPINE
ITW Building Components Group Inc.
Haines City, FL 33844
FL COA #0 278

WARNING READ AND FOLLOW ALL NOTES ON THIS SHEET!
IMPORTANT FURNISH THIS DESIGN TO ALL CONTRACTORS INCLUDING INSTALLERS.

Trusses require extreme care in fabricating, handling, shipping, installing and bracing. Refer to and follow the latest edition of BCSI (Building Component Safety Information, by TPI and WTCA) for general practices prior to performing these functions. Installers shall provide temporary bracing per BCSI. Unless noted otherwise, top chord shall have properly attached structural sheathing and bottom chord shall have a properly attached rigid ceiling. Locations shown for permanent lateral restraint of webs shall have bracing installed per BCSI sections B3, B7 or B10, as applicable.

ITW Building Components Group Inc. (ITWBCG) shall not be responsible for any deviation from this design, any failure to build the truss in conformance with ANSI/TPI 1, or for handling, shipping, installation & bracing of trusses. Apply plates to each face of truss and position as shown above and on the Joint Details, unless noted otherwise. Refer to drawings 160A-Z for standard plate positions. A seal on this drawing or cover page listing this drawing, indicates acceptance of professional engineering responsibility solely for the design shown. The suitability and use of this design for any structure is the responsibility of the Building Designer per ANSI/TPI 1 Sec.2. For more information see: This job's general notes page; ITW-BCG: www.itwbcg.com; TPI: www.tpinst.org; WTCA: www.sbcindustry.com; ICC: www.iccsafe.org

TC LL	20.0 PSF	REF	R215-- 76699
TC DL	10.0 PSF	DATE	01/22/13
BC DL	10.0 PSF	DRW	HCUSR215 13022009
BC LL	0.0 PSF	HC-ENG	KD/AP
TOT.LD.	40.0 PSF	SEQN-	362701
DUR.FAC.	1.25	FROM	CDM
SPACING	24.0"	JREF-	1UT3215_Z01

Top chord 2x4 SP_#2_N__12A
Bot chord 2x4 SP_#2_N__12A :B2 2x4 SP_SS_12A:
Webs 2x4 SP_#2_N__12A :W4 2x4 SP_SS_12A:

Lumber grades designated with "12A" use design values approved 1/5/2012 by ALSC.

These support conditions used at bearings indicated
(H1) = ITW (KC) ATH29 w/ (2)2x8 SP_SS_12A supporting member.
Supported Member Face: (4) 0.131"x1.5" nails
Supporting Member Face: (8) 0.128"x3" nails
Supporting Member Top: (4) 0.128"x3" nails

In lieu of structural panels use purlins to brace all flat TC @ 24" OC.

Deflection meets L/240 live and L/180 total load. Creep increase factor for dead load is 1.50.

(I) - plates so marked were sized using a Fabrication Tolerance of 0% and a Rotational Tolerance of 0 degrees.

130 mph wind, 15.00 ft mean hgt, ASCE 7-10, CLOSED bldg, not located within 9.00 ft from roof edge, RISK CAT II, EXP C, wind TC DL=5.0 psf, wind BC DL=5.0 psf. GCpi(+/-)=0.18

Wind loads and reactions based on MWFRS with additional C&C member design.

Right end vertical not exposed to wind pressure.

(a) Continuous lateral bracing equally spaced on member.

Bottom chord checked for 10.00 psf non-concurrent live load.

The overall height of this truss excluding overhang is 5-10-3.

MWFRS loads based on trusses located at least 7.50 ft. from roof edge.

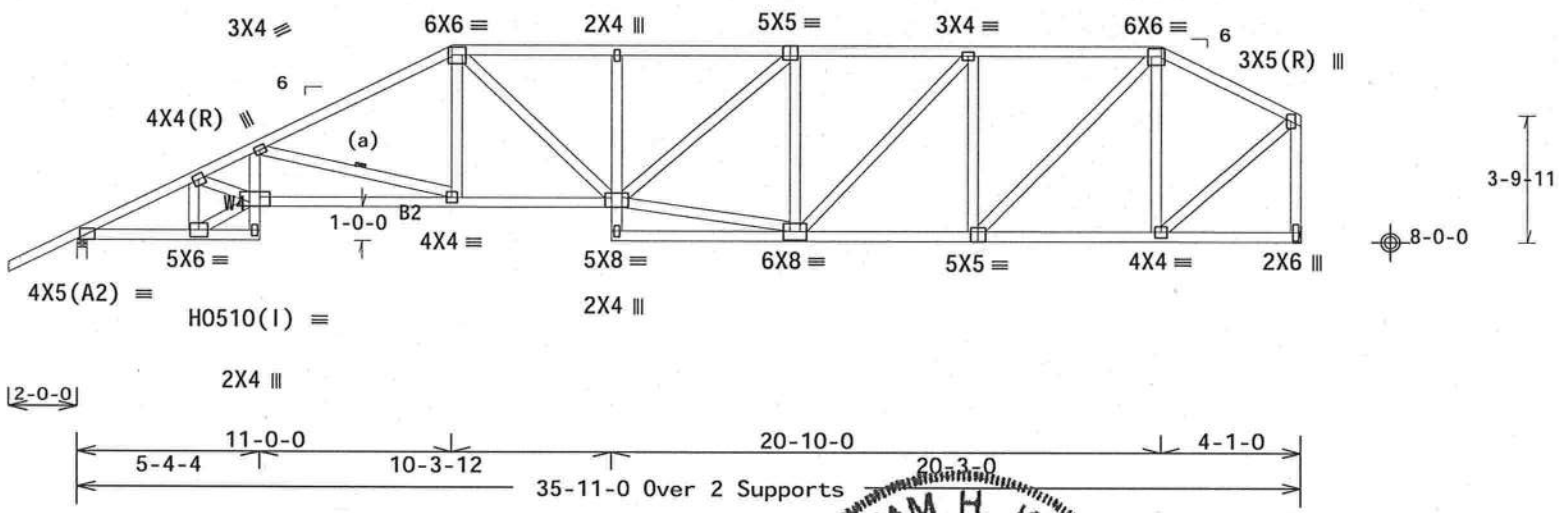

Design Crit: FBC2010Res/TPI-2007(STD)

PLT TYP. 20 Gauge HS,Wave FT/RT=20%(0%)/10(0) 10.03.11.0209.20 OTE:1 FL/-/5/-/-/R/- Scale =.1875"/Ft.

WILLIAM H. KRICK LICENSE No. 70861 STATE OF FLORIDA PROFESSIONAL ENGINEER

01/22/2013

ALPINE
ITW Building Components Group Inc.
Haines City, FL 33844
FL COA #0 278

WARNING READ AND FOLLOW ALL NOTES ON THIS SHEET!
IMPORTANT FURNISH THIS DESIGN TO ALL CONTRACTORS INCLUDING INSTALLERS.

Trusses require extreme care in fabricating, handling, shipping, installing and bracing. Refer to and follow the latest edition of BCSI (Building Component Safety Information, by TPI and WTCA) for safety practices prior to performing these functions. Installers shall provide temporary bracing per BCSI. Unless noted otherwise, top chord shall have properly attached structural sheathing and bottom chord shall have a properly attached rigid ceiling. Locations shown for permanent lateral restraint of webs shall have bracing installed per BCSI sections B3, B7 or B10, as applicable.

ITW Building Components Group Inc. (ITWBCG) shall not be responsible for any deviation from this design, any failure to build the truss in conformance with ANSI/TPI 1, or for handling, shipping, installation and bracing of trusses. Apply plates to each face of truss and position as shown above and on the Joint Details, unless noted otherwise. Refer to drawings 160A-Z for standard plate positions. A seal on this drawing or cover page listing this drawing, indicates acceptance of professional engineering responsibility solely for the design shown. The suitability and use of this design for any structure is the responsibility of the Building Designer per ANSI/TPI 1 Sec.2. For more information see: This job's general notes page; ITW-BCG: www.itwbcg.com; TPI: www.tpinst.org; WTCA: www.sbcindustry.com; ICC: www.iccsafe.org

TC LL	20.0 PSF	REF	R215-- 76700
TC DL	10.0 PSF	DATE	01/22/13
BC DL	10.0 PSF	DRW	HCUSR215 13022010
BC LL	0.0 PSF	HC-ENG	KD/AP
TOT.LD.	40.0 PSF	SEQN-	362712
DUR.FAC.	1.25	FROM	CDM
SPACING	24.0"	JREF-	1UT3215_Z01

Top chord 2x4 SP_#2_N__12A
Bot chord 2x4 SP_#2_N__12A
Webs 2x4 SP_#2_N__12A

Lumber grades designated with "12A" use design values approved 1/5/2012 by ALSC.

These support conditions used at bearings indicated
(H1) = ITW (KC) ATH29 w/ (2)2x8 SP_SS_12A supporting member.
Supported Member Face: (4) 0.131"x1.5" nails
Supporting Member Face: (8) 0.128"x3" nails
Supporting Member Top: (4) 0.128"x3" nails

Deflection meets L/240 live and L/180 total load. Creep increase factor for dead load is 1.50.

MWFRS loads based on trusses located at least 15.00 ft. from roof edge.

130 mph wind, 15.00 ft mean hgt, ASCE 7-10, CLOSED bldg, not located within 9.00 ft from roof edge, RISK CAT II, EXP C, wind TC DL=5.0 psf, wind BC DL=5.0 psf. GCpi(+/-)=0.18

Wind loads and reactions based on MWFRS with additional C&C member design.

Right end vertical not exposed to wind pressure.

In lieu of structural panels use purlins to brace all flat TC @ 24" OC.

Bottom chord checked for 10.00 psf non-concurrent live load.

The overall height of this truss excluding overhang is 6-10-3.

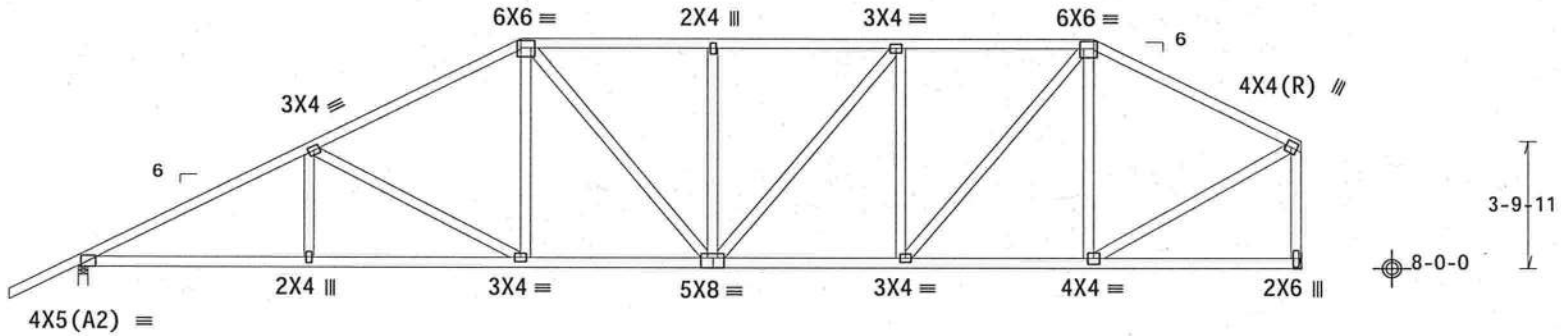

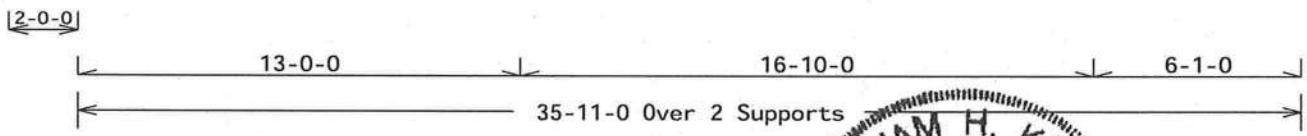

R=1576 U=122 W=3.5"
RL=165/-139

R=1427 U=108
H=H1

Design Crit: FBC2010Res/TPI-2007(STD)
FT/RT=20%(0%)/10(0)

PLT TYP. Wave

10.03.11.0809.20 QTY: 1

FL/-/5/-/-/R/-

Scale =.1875"/Ft.

WILLIAM H. KRICK
LICENSE
No. 70861
STATE OF FLORIDA
PROFESSIONAL ENGINEER
01/22/2013

ALPINE
ITW Building Components Group Inc.
Haines City, FL 33844
FL COA #0 278

WARNING READ AND FOLLOW ALL NOTES ON THIS SHEET!
IMPORTANT FURNISH THIS DESIGN TO ALL CONTRACTORS INCLUDING INSTALLERS.

Trusses require extreme care in fabricating, handling, shipping, installing and bracing. Refer to and follow the latest edition of BCSI (Building Component Safety Information, by TPI and WTCA) for safety practices prior to performing these functions. Installers shall provide temporary bracing per BCSI. Unless noted otherwise, top chord shall have properly attached structural sheathing and bottom chord shall have a properly attached rigid ceiling. Locations shown for permanent lateral restraint of webs shall have bracing installed per BCSI sections B3, B7 or B10, as applicable.

ITW Building Components Group Inc. (ITWBCG) shall not be responsible for any deviation from this design, any failure to build the truss in conformance with ANSI/TPI 1, or for handling, shipping, installation and bracing of trusses. Apply plates to each face of truss and position as shown above and on the Joint Details, unless noted otherwise. Refer to drawings 160A-Z for standard plate positions. A seal on this drawing or cover page listing this drawing, indicates acceptance of professional engineering responsibility solely for the design shown. The suitability and use of this design for any structure is the responsibility of the Building Designer per ANSI/TPI 1 Sec.2. For more information see: This job's general notes page; ITW-BCG: www.itwbcg.com; TPI: www.tpinst.org; WTCA: www.sbcindustry.com; ICC: www.iccsafe.org

TC LL	20.0 PSF	REF	R215-- 76701
TC DL	10.0 PSF	DATE	01/22/13
BC DL	10.0 PSF	DRW	HCUSR215 13022011
BC LL	0.0 PSF	HC-ENG	KD/AP
TOT.LD.	40.0 PSF	SEQN-	362684
DUR.FAC.	1.25	FROM	CDM
SPACING	24.0"	JREF-	1UT3215_Z01

(8025-/DERRINGTON PROPERTIES /Plumb Level Construction -- LAKE CITY, FL - G4)

THIS DWG PREPARED FROM COMPUTER INPUT (LOADS & DIMENSIONS) SUBMITTED BY TRUSS MFR.

Top chord 2x4 SP_#2_N__12A
Bot chord 2x4 SP_#2_N__12A
Webs 2x4 SP_#2_N__12A

Lumber grades designated with "12A" use design values approved 1/5/2012 by ALSC.

These support conditions used at bearings indicated
(H1) = ITW (KC) ATH29 w/ (2)2x8 SP_SS_12A supporting member.
Supported Member Face: (4) 0.131"x1.5" nails
Supporting Member Face: (8) 0.128"x3" nails
Supporting Member Top: (4) 0.128"x3" nails

Bottom chord checked for 10.00 psf non-concurrent live load.

The overall height of this truss excluding overhang is 7-10-3.

MWFRS loads based on trusses located at least 15.00 ft. from roof edge.

130 mph wind, 15.00 ft mean hgt, ASCE 7-10, CLOSED bldg, not located within 9.00 ft from roof edge, RISK CAT II, EXP C, wind TC DL=5.0 psf, wind BC DL=5.0 psf. GCpi(+/-)=0.18

Wind loads and reactions based on MWFRS with additional C&C member design.

Right end vertical not exposed to wind pressure.

(a) Continuous lateral bracing equally spaced on member.

In lieu of structural panels use purlins to brace all flat TC @ 24" OC.

Deflection meets L/240 live and L/180 total load. Creep increase factor for dead load is 1.50.

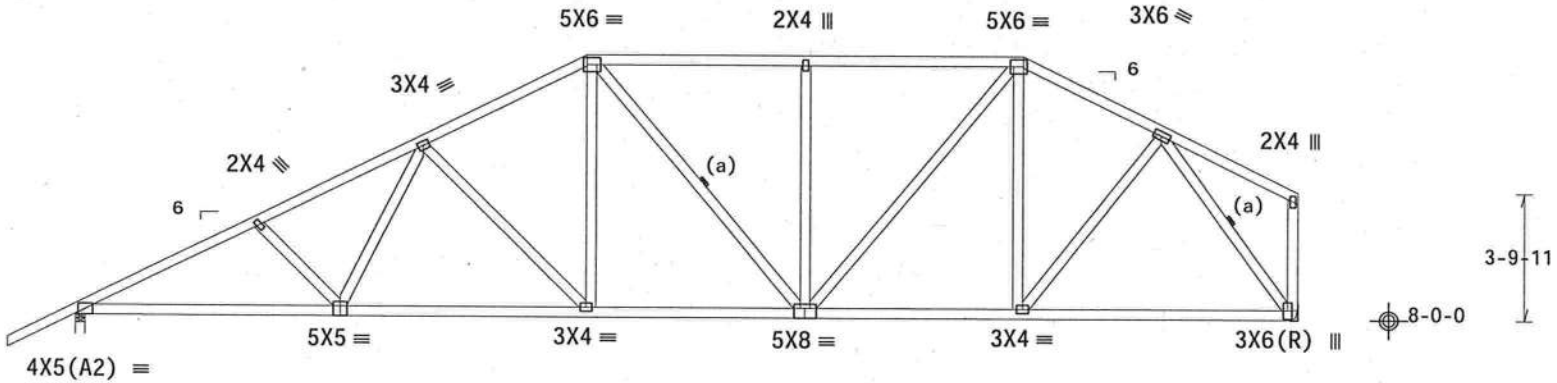

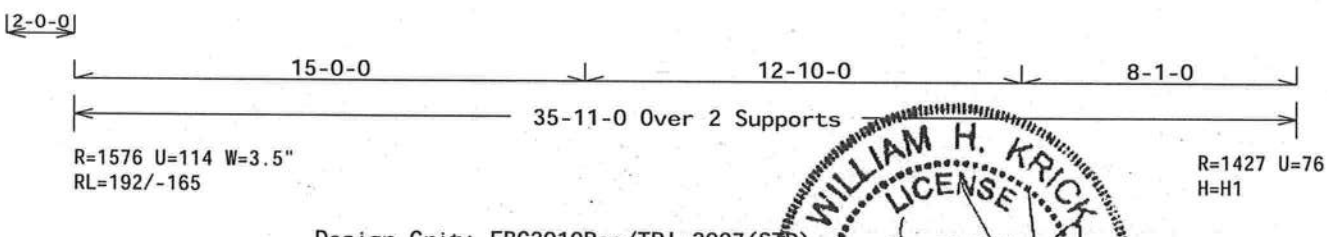

Design Crit: FBC2010Res/TPI-2007(STD)

PLT TYP. Wave

FT/RT=20%(0%)/10(0) 10.03.11.0209 20 QTY:1 FL/-/5/-/-/R/- Scale =.1875"/Ft.

WILLIAM H. KRICK LICENSE No. 70861 STATE OF FLORIDA PROFESSIONAL ENGINEER

01/22/2013

ALPINE
ITW Building Components Group Inc.
Haines City, FL 33844
FL COA #0 278

WARNING READ AND FOLLOW ALL NOTES ON THIS SHEET!
IMPORTANT FURNISH THIS DESIGN TO ALL CONTRACTORS INCLUDING INSTALLERS.

Trusses require extreme care in fabricating, handling, shipping, installing and bracing. Refer to and follow the latest edition of BCSI (Building Component Safety Information, by TPI and WTCA) for safety practices prior to performing these functions. Installers shall provide temporary bracing per BCSI. Unless noted otherwise, top chord shall have properly attached structural sheathing and bottom chord shall have a properly attached rigid ceiling. Locations shown for permanent lateral restraint of webs shall have bracing installed per BCSI sections B3, B7 or B10, as applicable.

ITW Building Components Group Inc. (ITWBCG) shall not be responsible for any deviation from this design, any failure to build the truss in conformance with ANSI/TPI 1, or for handling, shipping, installation and bracing of trusses. Apply plates to each face of truss and position as shown above and on the Joint Details, unless noted otherwise. Refer to drawings 160A-Z for standard plate positions. A seal on this drawing or cover page listing this drawing, indicates acceptance of professional engineering responsibility solely for the design shown. The suitability and use of this design for any structure is the responsibility of the Building Designer per ANSI/TPI 1 Sec.2. For more information see: This job's general notes page; ITW-BCG: www.itwbcg.com; TPI: www.tpinst.org; WTCA: www.sbcindustry.com; ICC: www.iccsafe.org

TC LL	20.0 PSF	REF	R215-- 76702
TC DL	10.0 PSF	DATE	01/22/13
BC DL	10.0 PSF	DRW	HCUSR215 13022012
BC LL	0.0 PSF	HC-ENG	KD/AP
TOT.LD.	40.0 PSF	SEQN-	362686
DUR.FAC.	1.25	FROM	CDM
SPACING	24.0"	JREF-	1UT3215_Z01

(8025-/DERRINGTON PROPERTIES /Plumb Level Construction -- LAKE CITY, FL - G5)

THIS DWG PREPARED FROM COMPUTER INPUT (LOADS & DIMENSIONS) SUBMITTED BY TRUSS MFR.

Top chord 2x4 SP_#2_N__12A
Bot chord 2x4 SP_#2_N__12A :B2 2x4 SP_SS_12A:
Webs 2x4 SP_#2_N__12A

Lumber grades designated with "12A" use design values approved 1/5/2012 by ALSC.

These support conditions used at bearings indicated
(H1) = ITW (KC) ATH29 w/ (2)2x8 SP_SS_12A supporting member.
Supported Member Face: (4) 0.131"x1.5" nails
Supporting Member Face: (8) 0.128"x3" nails
Supporting Member Top: (4) 0.128"x3" nails

Bottom chord checked for 10.00 psf non-concurrent live load.

The overall height of this truss excluding overhang is 8-10-3.

MWFRS loads based on trusses located at least 15.00 ft. from roof edge.

130 mph wind, 15.00 ft mean hgt, ASCE 7-10, CLOSED bldg, not located within 9.00 ft from roof edge, RISK CAT II, EXP C, wind TC DL=5.0 psf, wind BC DL=5.0 psf. GCpi(+/-)=0.18

Wind loads and reactions based on MWFRS with additional C&C member design.

Right end vertical not exposed to wind pressure.

(a) Continuous lateral bracing equally spaced on member.

In lieu of structural panels use purlins to brace all flat TC @ 24" OC.

Deflection meets L/240 live and L/180 total load. Creep increase factor for dead load is 1.50.

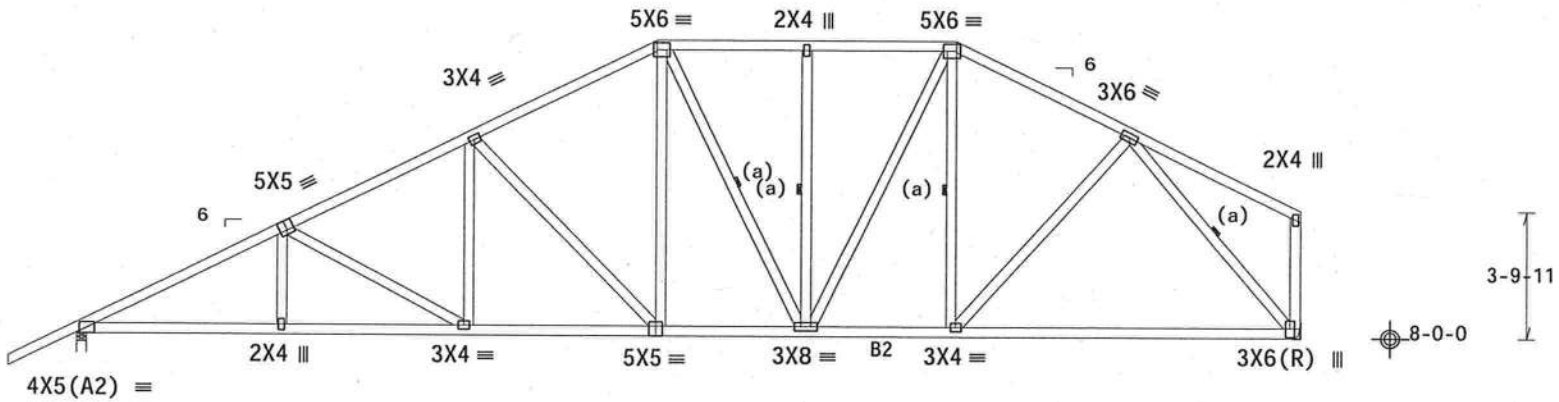

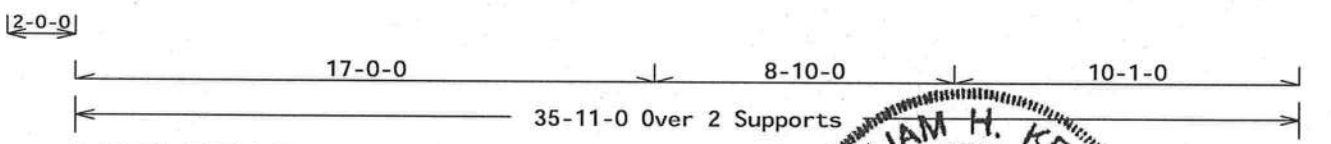

R=1576 U=102 W=3.5"
RL=218/-192

R=1427 U=48
H=H1

Design Crit: FBC2010Res/TPI-2007(STD)
FT/RT=20%(0%)/10(0)

PLT TYP. Wave

10.03.11.0209.20 QTY: 1

FL/-/5/-/-/R/-

Scale =.1875"/Ft.

WILLIAM H. KRICK
LICENSE
No. 70861
STATE OF FLORIDA
PROFESSIONAL ENGINEER

01/22/2013

ALPINE
ITW Building Components Group Inc.
Haines City, FL 33844
FL COA #0 278

WARNING READ AND FOLLOW ALL NOTES ON THIS SHEET!
IMPORTANT FURNISH THIS DESIGN TO ALL CONTRACTORS INCLUDING INSTALLERS.

Trusses require extreme care in fabricating, handling, shipping, installing and bracing. Refer to and follow the latest edition of BCSI (Building Component Safety Information, by TPI and WTCA) for general practices prior to performing these functions. Installers shall provide temporary bracing per BCSI. Unless noted otherwise, top chord shall have properly attached structural sheathing and bottom chord shall have a properly attached rigid ceiling. Locations shown for permanent lateral restraint of webs shall have bracing installed per BCSI sections B3, B7 or B10, as applicable.

ITW Building Components Group Inc. (ITWBCG) shall not be responsible for any deviation from this design, any failure to build the truss in conformance with ANSI/TPI 1, or for handling, shipping, installation and bracing of trusses. Apply plates to each face of truss and position as shown above and on the Joint Details, unless noted otherwise. Refer to drawings 16GA-Z for standard plate positions. A seal on this drawing or cover page listing this drawing, indicates acceptance of professional engineering responsibility solely for the design shown. The suitability and use of this design for any structure is the responsibility of the Building Designer per ANSI/TPI 1 Sec.2. For more information see: This job's general notes page: ITW-BCG: www.itwbcg.com; TPI: www.tpinst.org; WTCA: www.sbcindustry.com; ICC: www.iccsafe.org

TC LL	20.0 PSF	REF	R215-- 76703
TC DL	10.0 PSF	DATE	01/22/13
BC DL	10.0 PSF	DRW	HCUSR215 13022013
BC LL	0.0 PSF	HC-ENG	KD/AP
TOT.LD.	40.0 PSF	SEQN-	362688
DUR.FAC.	1.25	FROM	CDM
SPACING	24.0"	JREF-	1UT3215_Z01

(8025-/DERRINGTON PROPERTIES /Plumb Level Construction -- LAKE CITY, FL - G6)

THIS DWG PREPARED FROM COMPUTER INPUT (LOADS & DIMENSIONS) SUBMITTED BY TRUSS MFR.

Top chord 2x4 SP_#2_N__12A
Bot chord 2x4 SP_#2_N__12A
Webs 2x4 SP_#2_N__12A

Lumber grades designated with "12A" use design values approved 1/5/2012 by ALSC.

These support conditions used at bearings indicated
(H1) = ITW (KC) ATH29 w/ (2)2x8 SP_SS_12A supporting member.
Supported Member Face: (4) 0.131"x1.5" nails
Supporting Member Face: (8) 0.128"x3" nails
Supporting Member Top: (4) 0.128"x3" nails

Bottom chord checked for 10.00 psf non-concurrent live load.

The overall height of this truss excluding overhang is 9-10-3.

MWFRS loads based on trusses located at least 15.00 ft. from roof edge.

130 mph wind, 15.00 ft mean hgt, ASCE 7-10, CLOSED bldg, not located within 9.00 ft from roof edge, RISK CAT II, EXP C, wind TC DL=5.0 psf, wind BC DL=5.0 psf. GCpi(+/-)=0.18

Wind loads and reactions based on MWFRS with additional C&C member design.

Right end vertical not exposed to wind pressure.

(a) Continuous lateral bracing equally spaced on member.

In lieu of structural panels use purlins to brace all flat TC @ 24" OC.

Deflection meets L/240 live and L/180 total load. Creep increase factor for dead load is 1.50.

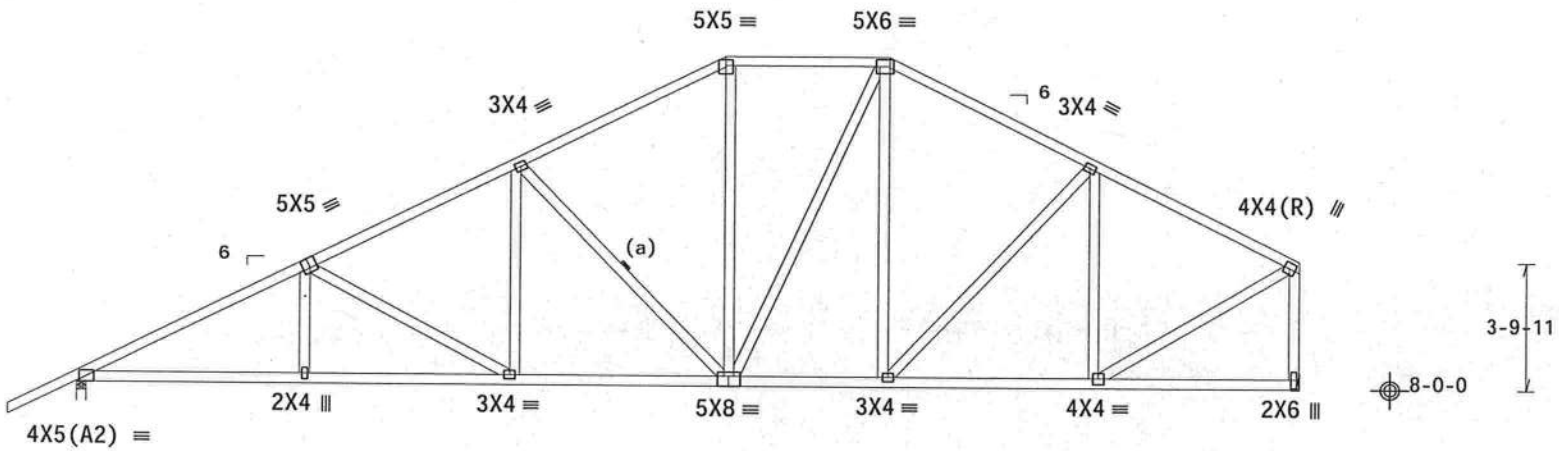

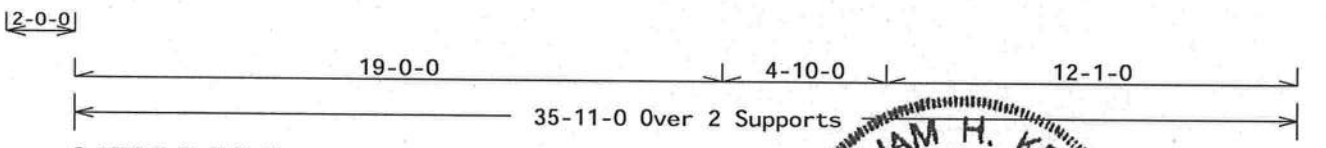

R=1576 U=81 W=3.5"
RL=245/-218

R=1427 U=31
H=H1

PLT TYP. Wave

Design Crit: FBC2010Res/TPI-2007(STD)
FT/RT=20%(0%)/10(0)

10.03.11.0809.20 QTY 1

FL/-/5/-/-/R/-

Scale =.1875"/Ft.

WILLIAM H. KRICK LICENSE No. 70861 STATE OF FLORIDA PROFESSIONAL ENGINEER
01/22/2013

ALPINE
ITW Building Components Group Inc.
Haines City, FL 33844
FL COA #0 278

WARNING READ AND FOLLOW ALL NOTES ON THIS SHEET!
IMPORTANT FURNISH THIS DESIGN TO ALL CONTRACTORS INCLUDING INSTALLERS.

Trusses require extreme care in fabricating, handling, shipping, installing and bracing. Refer to and follow the latest edition of BCSI (Building Component Safety Information, by TPI and WTCA) for safety practices prior to performing these functions. Installers shall provide temporary bracing per BCSI. Unless noted otherwise, top chord shall have properly attached structural sheathing and bottom chord shall have a properly attached rigid ceiling. Locations shown for permanent lateral restraint of webs shall have bracing installed per BCSI sections B3, B7 or B10, as applicable.

ITW Building Components Group Inc. (ITWBCG) shall not be responsible for any deviation from this design, any failure to build the truss in conformance with ANSI/TPI 1, or for handling, shipping, installation and bracing of trusses. Apply plates to each face of truss and position as shown above and on the Joint Details, unless noted otherwise. Refer to drawings 160A-Z for standard plate positions. A seal on this drawing or cover page listing this drawing, indicates acceptance of professional engineering responsibility solely for the design shown. The suitability and use of this design for any structure is the responsibility of the Building Designer per ANSI/TPI 1 Sec.2. For more information see: This job's general notes page; ITW-BCG: www.itwbcg.com; TPI: www.tpinst.org; WTCA: www.sbcindustry.com; ICC: www.iccsafe.org

TC LL	20.0 PSF	REF	R215-- 76704
TC DL	10.0 PSF	DATE	01/22/13
BC DL	10.0 PSF	DRW	HCUSR215 13022014
BC LL	0.0 PSF	HC-ENG	KD/AP
TOT.LD.	40.0 PSF	SEQN-	362690
DUR.FAC.	1.25	FROM	CDM
SPACING	24.0"	JREF-	1UT3215_Z01

Top chord 2x4 SP_#2_N__12A
Bot chord 2x4 SP_#2_N__12A
Webs 2x4 SP_#2_N__12A

Lumber grades designated with "12A" use design values approved 1/5/2012 by ALSC.

These support conditions used at bearings indicated
(H1) = ITW (KC) ATH29 w/ (2)2x8 SP_SS_12A supporting member.
Supported Member Face: (4) 0.131"x1.5" nails
Supporting Member Face: (8) 0.128"x3" nails
Supporting Member Top: (4) 0.128"x3" nails

Deflection meets L/240 live and L/180 total load. Creep increase factor for dead load is 1.50.

130 mph wind, 15.00 ft mean hgt, ASCE 7-10, CLOSED bldg, not located within 9.00 ft from roof edge, RISK CAT II, EXP C, wind TC DL=5.0 psf, wind BC DL=5.0 psf. GCpi(+/-)=0.18

Wind loads and reactions based on MWFRS with additional C&C member design.

Right end vertical not exposed to wind pressure.

(a) Continuous lateral bracing equally spaced on member.

Bottom chord checked for 10.00 psf non-concurrent live load.

The overall height of this truss excluding overhang is 10-10-3.

MWFRS loads based on trusses located at least 15.00 ft. from roof edge.

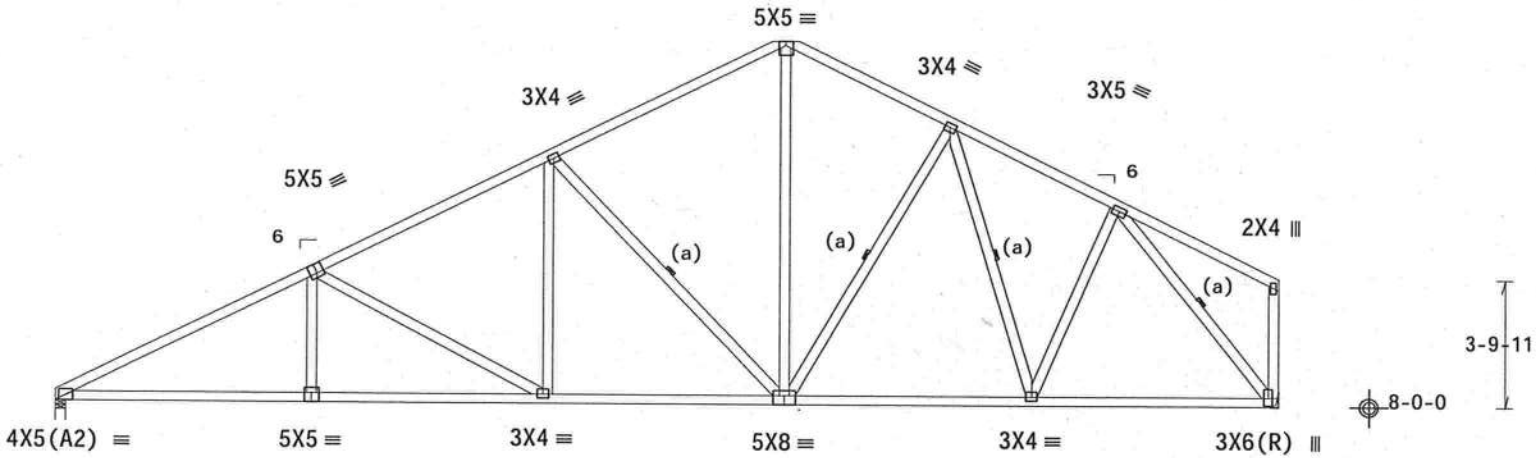

21-5-0 | 14-6-0

35-11-0 Over 2 Supports

R=1443 U=30 W=3.5"
RL=253/-212

R=1431 U=27
H=H1

Design Crit: FBC2010Res/TPI-2007(STD)
FT/RT=20%(0%)/10(0)

PLT TYP. Wave

10.03.11.0209.20 QTY: 1

FL/-/5/-/-/R/-

Scale =.1875"/Ft.

WILLIAM H. KRICK
LICENSE
No. 70861
STATE OF FLORIDA
PROFESSIONAL ENGINEER
01/22/2013

ALPINE
ITW Building Components Group Inc.
Haines City, FL 33844
FL COA #0 278

WARNING READ AND FOLLOW ALL NOTES ON THIS SHEET!
IMPORTANT FURNISH THIS DESIGN TO ALL CONTRACTORS INCLUDING INSTALLERS.

Trusses require extreme care in fabricating, handling, shipping, installing and bracing. Refer to and follow the latest edition of BCSI (Building Component Safety Information, by TPI and WTCA) for general practices prior to performing these functions. Installers shall provide temporary bracing per BCSI. Unless noted otherwise, top chord shall have properly attached structural sheathing and bottom chord shall have a properly attached rigid ceiling. Locations shown for permanent lateral restraint of webs shall have bracing installed per BCSI sections B3, B7 or B10, as applicable.

ITW Building Components Group Inc. (ITWBCG) shall not be responsible for any deviation from this design, any failure to build the truss in conformance with ANSI/TPI 1, or for handling, shipping, installation and bracing of trusses. Apply plates to each face of truss and position as shown above and on the Joint Details, unless noted otherwise. Refer to drawings 160A-Z for standard plate positions. A seal on this drawing or cover page listing this drawing, indicates acceptance of professional engineering responsibility solely for the design shown. The suitability and use of this design for any structure is the responsibility of the Building Designer per ANSI/TPI 1 Sec.2. For more information see: This job's general notes page; ITW-BCG: www.itwbcg.com; TPI: www.tpinst.org; WTCA: www.sbcindustry.com; ICC: www.iccsafe.org

TC LL	20.0 PSF	REF	R215-- 76705
TC DL	10.0 PSF	DATE	01/22/13
BC DL	10.0 PSF	DRW	HCUSR215 13022015
BC LL	0.0 PSF	HC-ENG	KD/AP
TOT.LD.	40.0 PSF	SEQN-	362692
DUR.FAC.	1.25	FROM	CDM
SPACING	24.0"	JREF-	1UT3215_Z01

(8025-/DERRINGTON PROPERTIES /Plumb Level Construction -- LAKE CITY, FL - G8)

THIS DWG PREPARED FROM COMPUTER INPUT (LOADS & DIMENSIONS) SUBMITTED BY TRUSS MFR.

Top chord 2x4 SP_#2_N__12A
Bot chord 2x4 SP_#2_N__12A
Webs 2x4 SP_#2_N__12A

Lumber grades designated with "12A" use design values approved 1/5/2012 by ALSC.

(a) Continuous lateral bracing equally spaced on member.

Deflection meets L/240 live and L/180 total load. Creep increase factor for dead load is 1.50.

130 mph wind, 15.00 ft mean hgt, ASCE 7-10, CLOSED bldg, not located within 9.00 ft from roof edge, RISK CAT II, EXP C, wind TC DL=5.0 psf, wind BC DL=5.0 psf. GCpi(+/-)=0.18

Wind loads and reactions based on MWFRS with additional C&C member design.

Bottom chord checked for 10.00 psf non-concurrent live load.

The overall height of this truss excluding overhang is 11-0-11.

MWFRS loads based on trusses located at least 15.00 ft. from roof edge.

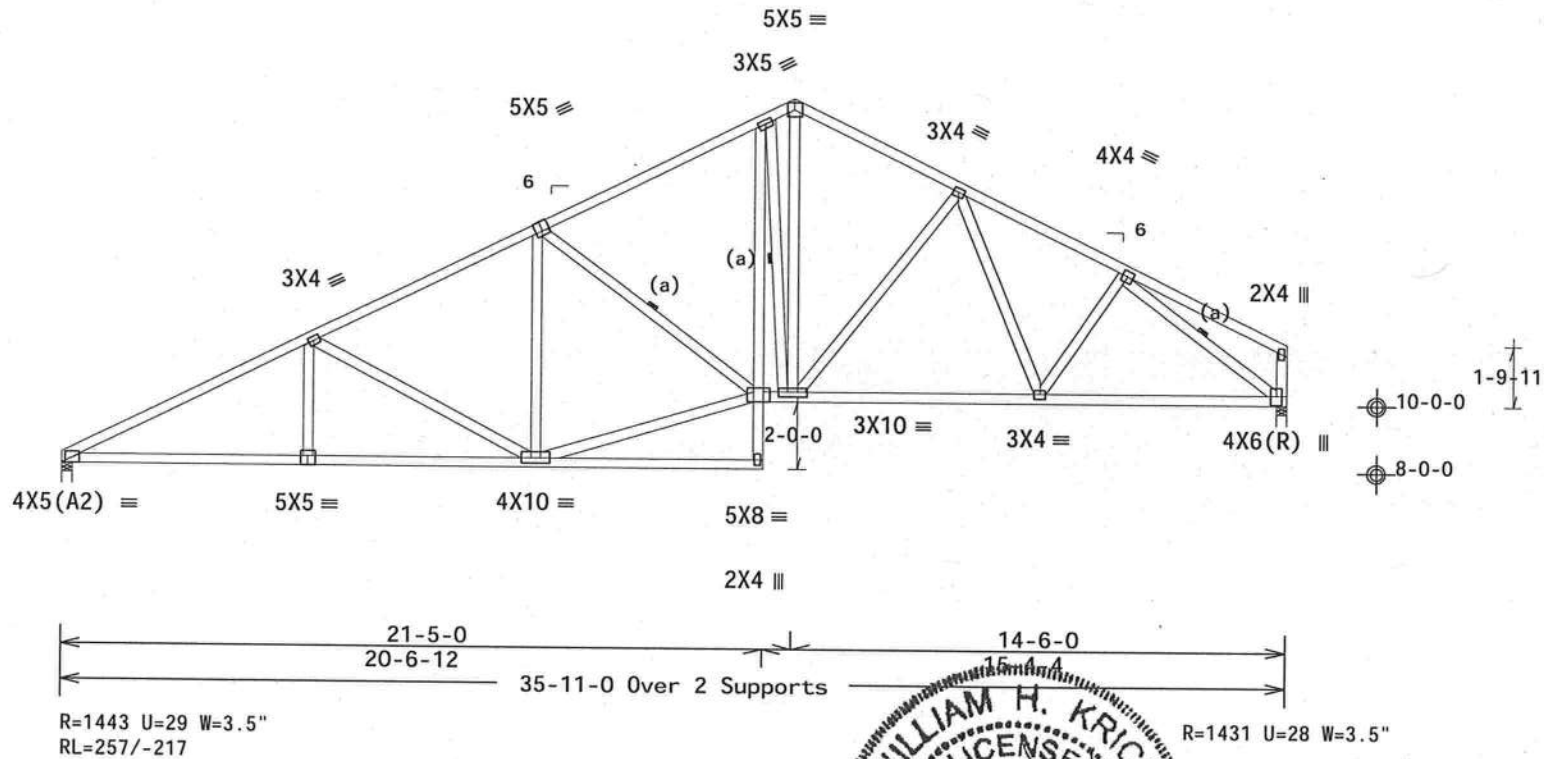

Design Crit: FBC2010Res/TPI-2007(STD)
FT/RT=20%(0%)/10(0)

PLT TYP. Wave

10.03.11.0209.20 QTY 1 FL/-/5/-/-/R/- Scale =.1875"/Ft.

WILLIAM H. KRICK LICENSE No. 70861 STATE OF FLORIDA PROFESSIONAL ENGINEER
01/22/2013

ALPINE
ITW Building Components Group Inc.
Haines City, FL 33844
FL COA #0 278

WARNING READ AND FOLLOW ALL NOTES ON THIS SHEET!
IMPORTANT FURNISH THIS DESIGN TO ALL CONTRACTORS INCLUDING INSTALLERS.

Trusses require extreme care in fabricating, handling, shipping, installing and bracing. Refer to and follow the latest edition of BCSI (Building Component Safety Information, by TPI and WTCA) for safety practices prior to performing these functions. Installers shall provide temporary bracing per BCSI. Unless noted otherwise, top chord shall have properly attached structural sheathing and bottom chord shall have a properly attached rigid ceiling. Locations shown for permanent lateral restraint of webs shall have bracing installed per BCSI sections B3, B7 or B10, as applicable.

ITW Building Components Group Inc. (ITWBCG) shall not be responsible for any deviation from this design, any failure to build the truss in conformance with ANSI/TPI 1, or for handling, shipping, installation and bracing of trusses. Apply plates to each face of truss and position as shown above and on the Joint Details, unless noted otherwise. Refer to drawings 160A-Z for standard plate positions. A seal on this drawing or cover page listing this drawing, indicates acceptance of professional engineering responsibility solely for the design shown. The suitability and use of this design for any structure is the responsibility of the Building Designer per ANSI/TPI 1 Sec.2. For more information see: This job's general notes page; ITW-BCG: www.itwbcg.com; TPI: www.tpinst.org; WTCA: www.sbcindustry.com; ICC: www.iccsafe.org

TC LL	20.0 PSF	REF	R215-- 76706
TC DL	10.0 PSF	DATE	01/22/13
BC DL	10.0 PSF	DRW	HCUSR215 13022016
BC LL	0.0 PSF	HC-ENG	KD/AP
TOT.LD.	40.0 PSF	SEQN-	362714
DUR.FAC.	1.25	FROM	CDM
SPACING	24.0"	JREF-	1UT3215_Z01

(8025-/DERRINGTON PROPERTIES /Plumb Level Construction -- LAKE CITY, FL - G9)

THIS DWG PREPARED FROM COMPUTER INPUT (LOADS & DIMENSIONS) SUBMITTED BY TRUSS MFR.

Top chord 2x4 SP_#2_N__12A :T4 2x6 SP_#2_N_12A:
Bot chord 2x4 SP_#2_N__12A
Webs 2x4 SP_#2_N__12A

Lumber grades designated with "12A" use design values approved 1/5/2012 by ALSC.

In lieu of structural panels use purlins to brace all flat TC @ 24" OC.

The overall height of this truss excluding overhang is 10-2-11.

MWFRS loads based on trusses located at least 15.00 ft. from roof edge.

NOTE: LATERALLY BRACE BOTTOM CHORD ABOVE FILLER AT 2'0" O.C. MAX. INCLUDING A LATERAL BRACE AT CHORD ENDS.

130 mph wind, 15.00 ft mean hgt, ASCE 7-10, CLOSED bldg, not located within 9.00 ft from roof edge, RISK CAT II, EXP C, wind TC DL=5.0 psf, wind BC DL=5.0 psf. GCpi(+/-)=0.18

Wind loads and reactions based on MWFRS with additional C&C member design.

Bottom chord checked for 10.00 psf non-concurrent live load.

Deflection meets L/240 live and L/180 total load. Creep increase factor for dead load is 1.50.

Top chord overhangs have been checked only for loads as indicated. Overhangs not checked for man loads or long-term deflection.

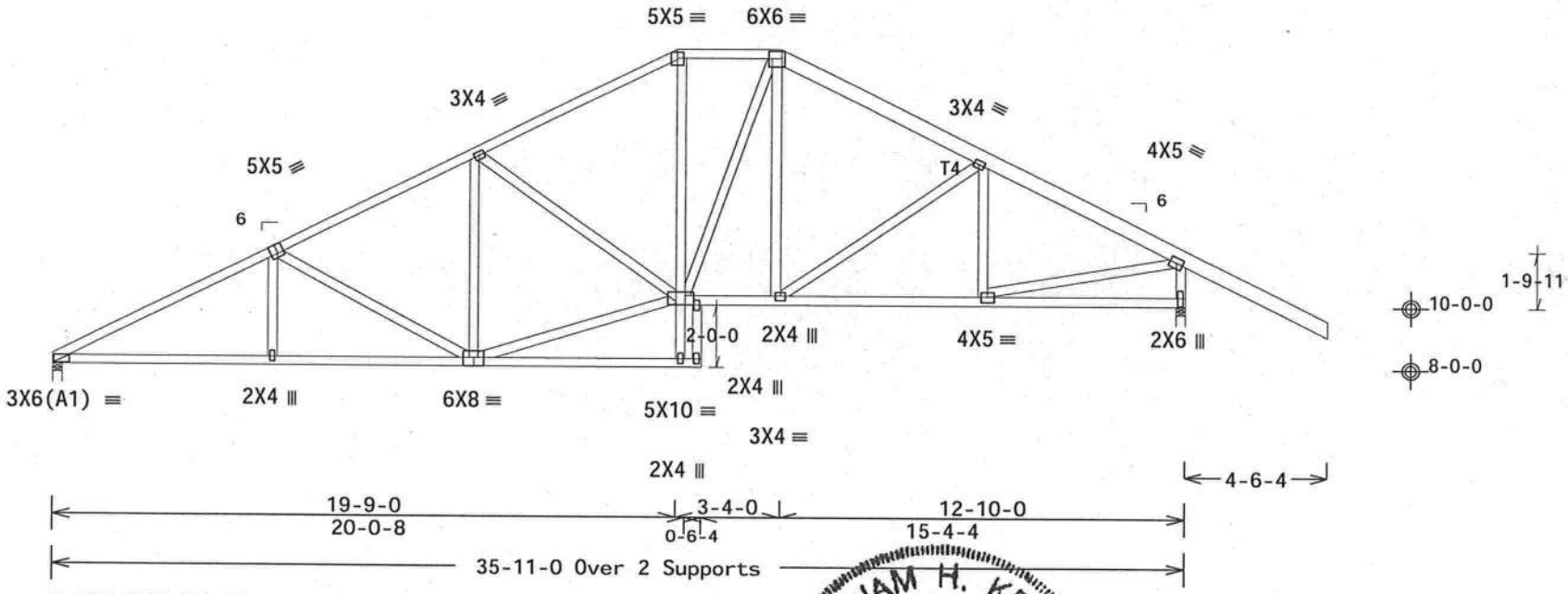

R=1424 U=53 W=3.5"
RL=310/-238

R=1741 U=104 W=3.5"

PLT TYP. Wave

Design Crit: FBC2010Res/TPI-2007(STD)
FT/RT=20%(0%)/10(0)

10.03.11.0209.20 QTY 1

FL/-/5/-/-/R/-

Scale =.1875"/Ft.

WILLIAM H. KRICK
LICENSE
No. 70861
STATE OF FLORIDA
PROFESSIONAL ENGINEER
01/22/2013

ALPINE
ITW Building Components Group Inc.
Haines City, FL 33844
FL COA #0 278

WARNING READ AND FOLLOW ALL NOTES ON THIS SHEET!
IMPORTANT FURNISH THIS DESIGN TO ALL CONTRACTORS INCLUDING INSTALLERS.

Trusses require extreme care in fabricating, handling, shipping, installing and bracing. Refer to and follow the latest edition of BCSI (Building Component Safety Information, by TPI and WTCA) for safety practices prior to performing these functions. Installers shall provide temporary bracing per BCSI. Unless noted otherwise, top chord shall have properly attached structural sheathing and bottom chord shall have a properly attached rigid ceiling. Locations shown for permanent lateral restraint of webs shall have bracing installed per BCSI sections B3, B7 or B10, as applicable.

ITW Building Components Group Inc. (ITWBCG) shall not be responsible for any deviation from this design, any failure to build the truss in conformance with ANSI/TPI 1, or for handling, shipping, installation and bracing of trusses. Apply plates to each face of truss and position as shown above and on the Joint Details, unless noted otherwise. Refer to drawings 160A-Z for standard plate positions. A seal on this drawing or cover page listing this drawing, indicates acceptance of professional engineering responsibility solely for the design shown. The suitability and use of this design for any structure is the responsibility of the Building Designer per ANSI/TPI 1 Sec.2. For more information see: This job's general notes page; ITW-BCG: www.itwbcg.com; TPI: www.tpinst.org; WTCA: www.sbcindustry.com; ICC: www.iccsafe.org

TC LL	20.0 PSF	REF	R215-- 76707
TC DL	10.0 PSF	DATE	01/22/13
BC DL	10.0 PSF	DRW	HCUSR215 13022017
BC LL	0.0 PSF	HC-ENG	KD/AP
TOT.LD.	40.0 PSF	SEQN-	362742
DUR.FAC.	1.25	FROM	CDM
SPACING	24.0"	JREF-	1UT3215_Z01

Top chord 2x4 SP_#2_N__12A :T1 2x4 SP_SS_12A:
:T4 2x6 SP_SS_12A:
Bot chord 2x4 SP_SS_12A :B2 2x4 SP_#2_N__12A:
Webs 2x4 SP_#2_N__12A
:Lt Slider 2x4 SP_#2_N__12A: BLOCK LENGTH = 3.580'

Lumber grades designated with "12A" use design values approved 1/5/2012 by ALSC.

In lieu of structural panels use purlins to brace all flat TC @ 24" OC.

The overall height of this truss excluding overhang is 7-9-7.

MWFRS loads based on trusses located at least 15.00 ft. from roof edge.

130 mph wind, 15.00 ft mean hgt, ASCE 7-10, CLOSED bldg, not located within 9.00 ft from roof edge, RISK CAT II, EXP C, wind TC DL=5.0 psf, wind BC DL=5.0 psf. GCpi(+/-)=0.18

Wind loads and reactions based on MWFRS with additional C&C member design.

(a) Continuous lateral bracing equally spaced on member.

Bottom chord checked for 10.00 psf non-concurrent live load.

Deflection meets L/240 live and L/180 total load. Creep increase factor for dead load is 1.50.

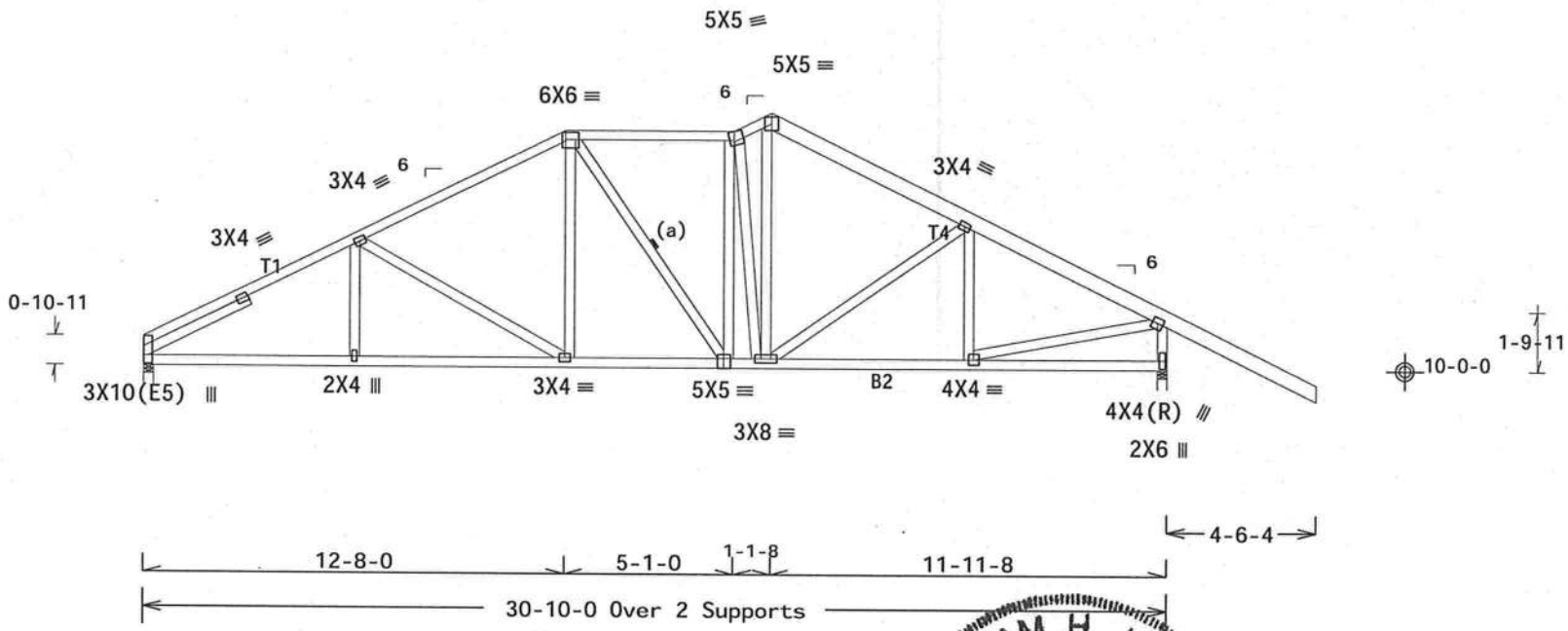

R=1212 U=57 W=3.5"
RL=242/-201

R=1546/0-11A W=3.5"

Design Crit: FBC2010Res/TPI-2007(STD)
FT/RT=20%(0%)/10(0)

PLT TYP. Wave

10.03.11.0209.20 QTY:1 FL/-/5/-/-/R/-

Scale =.1875"/Ft.

WILLIAM H. KRICK LICENSE No. 70861 STATE OF FLORIDA PROFESSIONAL ENGINEER

01/22/2013

ALPINE
ITW Building Components Group Inc.
Haines City, FL 33844
FL COA #0 278

WARNING READ AND FOLLOW ALL NOTES ON THIS SHEET!
IMPORTANT FURNISH THIS DESIGN TO ALL CONTRACTORS INCLUDING INSTALLERS.

Trusses require extreme care in fabricating, handling, shipping, installing and bracing. Refer to and follow the latest edition of BCSI (Building Component Safety Information, by TPI and WTCA) for safety practices prior to performing these functions. Installers shall provide temporary bracing per BCSI. Unless noted otherwise, top chord shall have properly attached structural sheathing and bottom chord shall have a properly attached rigid ceiling. Locations shown for permanent lateral restraint of webs shall have bracing installed per BCSI sections B3, B7 or B10, as applicable.

ITW Building Components Group Inc. (ITWBCG) shall not be responsible for any deviation from this design, any failure to build the truss in conformance with ANSI/TPI 1, or for handling, shipping, installation and bracing of trusses. Apply plates to each face of truss and position as shown above and on the Joint Details, unless noted otherwise. Refer to drawings 160A-Z for standard plate positions. A seal on this drawing or cover page listing this drawing, indicates acceptance of professional engineering responsibility solely for the design shown. The suitability and use of this design for any structure is the responsibility of the Building Designer per ANSI/TPI 1 Sec.2. For more information see: This job's general notes page; ITW-BCG: www.itwbcg.com; TPI: www.tpinst.org; WTCA: www.sbcindustry.com; ICC: www.iccsafe.org

TC LL	20.0 PSF	REF	R215-- 76708
TC DL	10.0 PSF	DATE	01/22/13
BC DL	10.0 PSF	DRW	HCUSR215 13022018
BC LL	0.0 PSF	HC-ENG	KD/AP
TOT.LD.	40.0 PSF	SEQN-	362748
DUR.FAC.	1.25	FROM	CDM
SPACING	24.0"	JREF-	1UT3215_Z01

THIS DWG PREPARED FROM COMPUTER INPUT (LOADS & DIMENSIONS) SUBMITTED BY TRUSS MFR.

Top chord 2x4 SP_#2_N__12A :T5 2x6 SP_SS_12A:
Bot chord 2x4 SP_#2_N__12A
Webs 2x4 SP_#2_N__12A

Lumber grades designated with "12A" use design values approved 1/5/2012 by ALSC.

In lieu of structural panels use purlins to brace all flat TC @ 24" OC.

The overall height of this truss excluding overhang is 7-9-7.

MWFRS loads based on trusses located at least 15.00 ft. from roof edge.

130 mph wind, 15.00 ft mean hgt, ASCE 7-10, CLOSED bldg, not located within 9.00 ft from roof edge, RISK CAT II, EXP C, wind TC DL=5.0 psf, wind BC DL=5.0 psf. GCpi(+/-)=0.18

Wind loads and reactions based on MWFRS with additional C&C member design.

Bottom chord checked for 10.00 psf non-concurrent live load.

Deflection meets L/240 live and L/180 total load. Creep increase factor for dead load is 1.50.

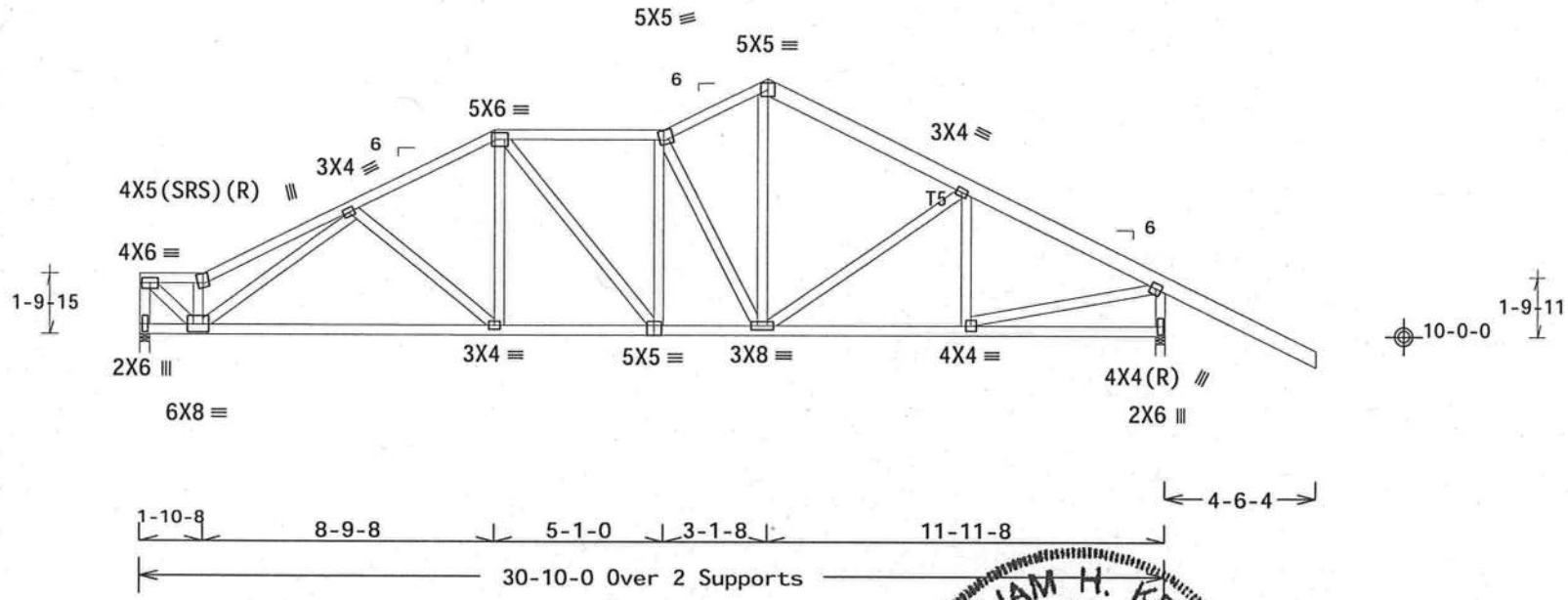

R=1212 U=40 W=3.5"
RL=224/-195

R=1546 U=95 W=3.5"

Design Crit: FBC2010Res/TPI-2007(STD)
FT/RT=20%(0%)/10(0)

PLT TYP. Wave

10.03.11.0209.20 QTY 1

FL/-/5/-/-/R/-

Scale =.1875"/Ft.

WILLIAM H. KRCK
LICENSE
No. 70861
STATE OF FLORIDA
PROFESSIONAL ENGINEER
01/22/2013

ALPINE
ITW Building Components Group Inc.
Haines City, FL 33844
FL COA #0 278

WARNING READ AND FOLLOW ALL NOTES ON THIS SHEET!
IMPORTANT FURNISH THIS DESIGN TO ALL CONTRACTORS INCLUDING INSTALLERS.

Trusses require extreme care in fabricating, handling, shipping, installing and bracing. Refer to and follow the latest edition of BCSI (Building Component Safety Information, by TPI and WTCA) for safety practices prior to performing these functions. Installers shall provide temporary bracing per BCSI. Unless noted otherwise, top chord shall have properly attached structural sheathing and bottom chord shall have a properly attached rigid ceiling. Locations shown for permanent lateral restraint of webs shall have bracing installed per BCSI sections B3, B7 or B10, as applicable.

ITW Building Components Group Inc. (ITWBCG) shall not be responsible for any deviation from this design, any failure to build the truss in conformance with ANSI/TPI 1, or for handling, shipping, installation and bracing of trusses. Apply plates to each face of truss and position as shown above and on the Joint Details, unless noted otherwise. Refer to drawings 160A-Z for standard plate positions. A seal on this drawing or cover page listing this drawing, indicates acceptance of professional engineering responsibility solely for the design shown. The suitability and use of this design for any structure is the responsibility of the Building Designer per ANSI/TPI 1 Sec.2. For more information see: This job's general notes page; ITW-BCG: www.itwbcg.com; TPI: www.tpinst.org; WTCA: www.sbcindustry.com; ICC: www.iccsafe.org

TC LL	20.0 PSF	REF	R215-- 76709
TC DL	10.0 PSF	DATE	01/22/13
BC DL	10.0 PSF	DRW	HCUSR215 13022019
BC LL	0.0 PSF	HC-ENG	KD/AP
TOT.LD.	40.0 PSF	SEQN-	362751
DUR.FAC.	1.25	FROM	CDM
SPACING	24.0"	JREF-	1UT3215_Z01

(8025-/DERRINGTON PROPERTIES /Plumb Level Construction -- LAKE CITY, FL - G12)

THIS DWG PREPARED FROM COMPUTER INPUT (LOADS & DIMENSIONS) SUBMITTED BY TRUSS MFR.

Top chord 2x4 SP_#2_N__12A
Bot chord 2x4 SP_#2_N__12A
Webs 2x4 SP_#2_N__12A

Lumber grades designated with "12A" use design values approved 1/5/2012 by ALSC.

Left end vertical not exposed to wind pressure.

Bottom chord checked for 10.00 psf non-concurrent live load.

The overall height of this truss excluding overhang is 7-9-7.

MWFRS loads based on trusses located at least 15.00 ft. from roof edge.

130 mph wind, 15.00 ft mean hgt, ASCE 7-10, CLOSED bldg, not located within 9.00 ft from roof edge, RISK CAT II, EXP C, wind TC DL=5.0 psf, wind BC DL=5.0 psf. GCpi(+/-)=0.18

Wind loads and reactions based on MWFRS with additional C&C member design.

In lieu of structural panels use purlins to brace all flat TC @ 24" OC.

Deflection meets L/240 live and L/180 total load. Creep increase factor for dead load is 1.50.

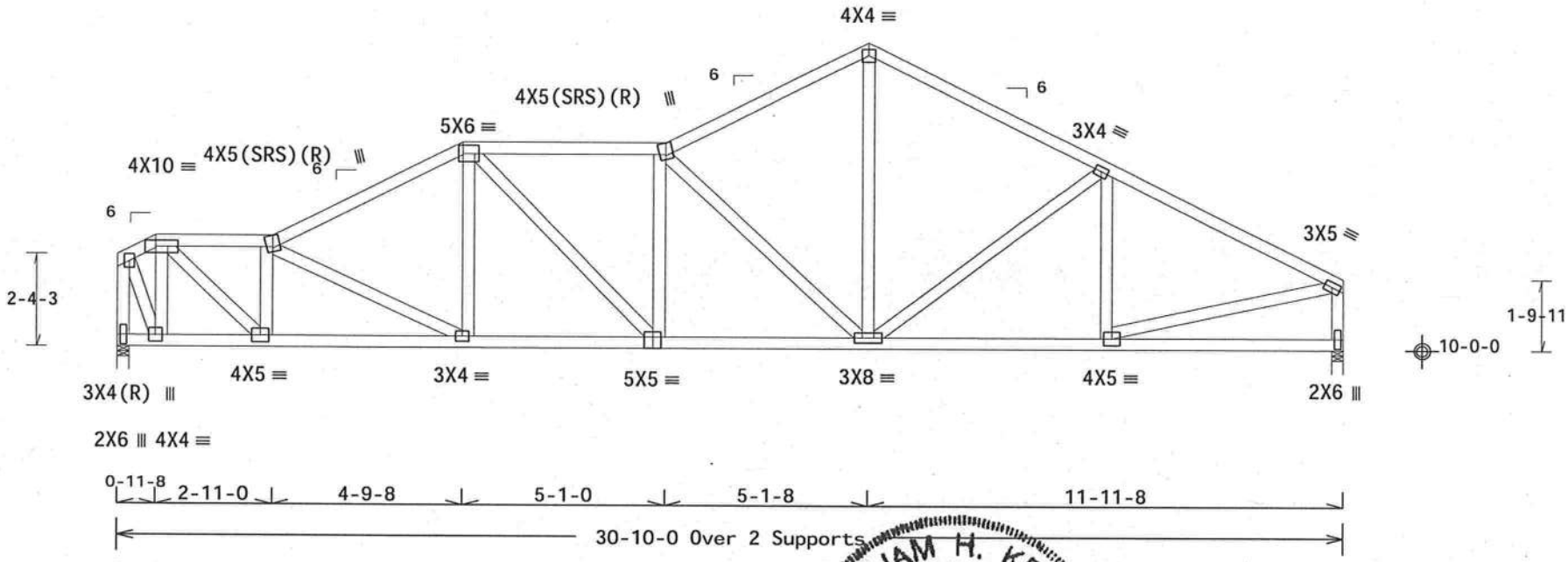

Design Crit: FBC2010Res/TPI-2007(STD)
FT/RT=20%(0%)/10(0)

PLT TYP. Wave

10.03.11.0209.20 QTY:1

FL/-/5/-/-/R/-

Scale =.25"/Ft.

WILLIAM H. KRICK
LICENSE
No. 70861
STATE OF FLORIDA
PROFESSIONAL ENGINEER
01/22/2013

ALPINE
ITW Building Components Group Inc.
Haines City, FL 33844
FL COA #0 278

WARNING READ AND FOLLOW ALL NOTES ON THIS SHEET!
IMPORTANT FURNISH THIS DESIGN TO ALL CONTRACTORS INCLUDING INSTALLERS.

Trusses require extreme care in fabricating, handling, shipping, installing and bracing. Refer to and follow the latest edition of BCSI (Building Component Safety Information, by TPI and WTCA) for safety practices prior to performing these functions. Installers shall provide temporary bracing per BCSI. Unless noted otherwise, top chord shall have properly attached structural sheathing and bottom chord shall have a properly attached rigid ceiling. Locations shown for permanent lateral restraint of webs shall have bracing installed per BCSI sections B3, B7 or B10, as applicable.

ITW Building Components Group Inc. (ITWBCG) shall not be responsible for any deviation from this design, any failure to build the truss in conformance with ANSI/TPI 1, or for handling, shipping, installation and bracing of trusses. Apply plates to each face of truss and position as shown above and on the Joint Details, unless noted otherwise. Refer to drawings 160A-Z for standard plate positions. A seal on this drawing or cover page listing this drawing, indicates acceptance of professional engineering responsibility solely for the design shown. The suitability and use of this design for any structure is the responsibility of the Building Designer per ANSI/TPI 1 Sec.2. For more information see: This job's general notes page; ITW-BCG: www.itwbcg.com; TPI: www.tpinst.org; WTCA: www.sbcindustry.com; ICC: www.iccsafe.org

TC LL	20.0 PSF	REF	R215-- 76710
TC DL	10.0 PSF	DATE	01/22/13
BC DL	10.0 PSF	DRW	HCUSR215 13022020
BC LL	0.0 PSF	HC-ENG	KD/AP
TOT.LD.	40.0 PSF	SEQN-	362757
DUR.FAC.	1.25	FROM	CDM
SPACING	24.0"	JREF-	1UT3215_Z01

(8025-/DERRINGTON PROPERTIES /Plumb Level Construction -- LAKE CITY, FL - G13)

THIS DWG PREPARED FROM COMPUTER INPUT (LOADS & DIMENSIONS) SUBMITTED BY TRUSS MFR.

Top chord 2x4 SP_#2_N__12A
Bot chord 2x4 SP_#2_N__12A
Webs 2x4 SP_#2_N__12A

Lumber grades designated with "12A" use design values approved 1/5/2012 by ALSC.

Left end vertical not exposed to wind pressure.

In lieu of structural panels use purlins to brace all flat TC @ 24" OC.

The overall height of this truss excluding overhang is 7-9-7.

MWFRS loads based on trusses located at least 15.00 ft. from roof edge.

130 mph wind, 15.00 ft mean hgt, ASCE 7-10, CLOSED bldg, not located within 9.00 ft from roof edge, RISK CAT II, EXP C, wind TC DL=5.0 psf, wind BC DL=5.0 psf. GCpi(+/-)=0.18

Wind loads and reactions based on MWFRS with additional C&C member design.

Max JT VERT DEFL: LL: 0.14" DL: 0.21" recommended camber 3/8"

Bottom chord checked for 10.00 psf non-concurrent live load.

Deflection meets L/240 live and L/180 total load. Creep increase factor for dead load is 1.50.

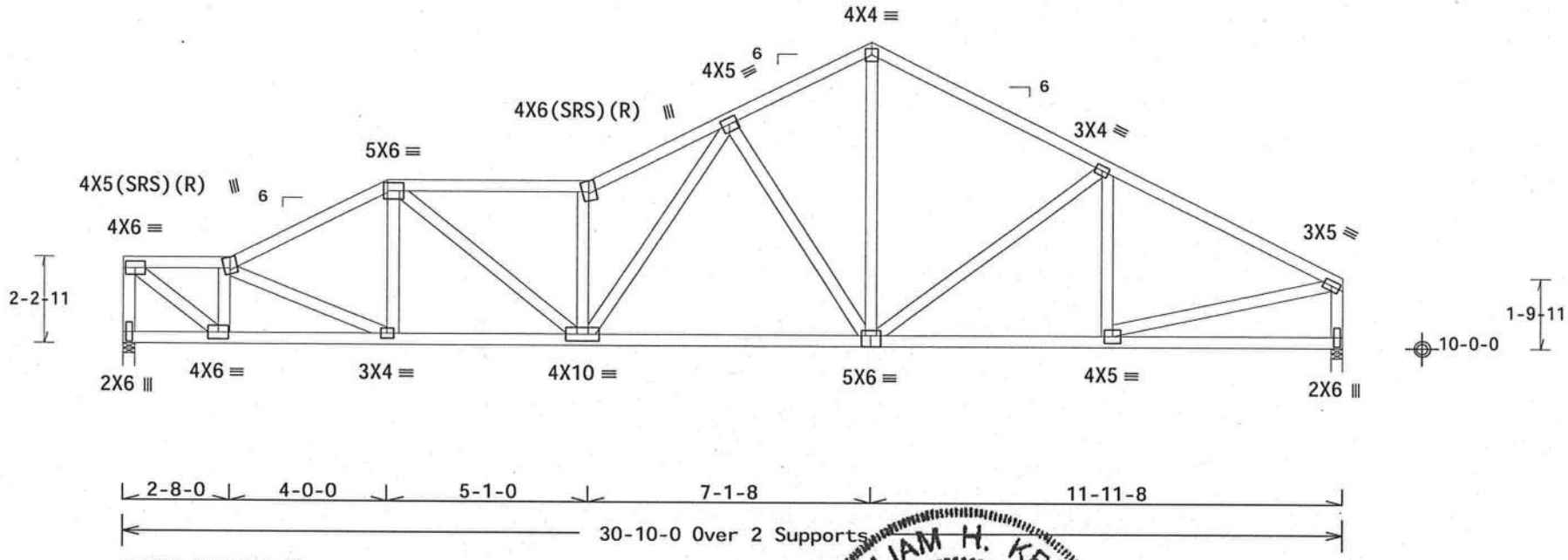

Design Crit: FBC2010Res/TPI-2007(STD)
FT/RT=20%(0%)/10(0)

10.03.11.0209.20 QTY 1

FL/-/5/-/-/R/-

Scale =.25"/Ft.

PLT TYP. Wave

WILLIAM H. KRICK
LICENSE
No. 70861
STATE OF FLORIDA
PROFESSIONAL ENGINEER
01/22/2013

ALPINE
ITW Building Components Group Inc.
Haines City, FL 33844
FL COA #0 278

WARNING READ AND FOLLOW ALL NOTES ON THIS SHEET!
IMPORTANT FURNISH THIS DESIGN TO ALL CONTRACTORS INCLUDING INSTALLERS.

Trusses require extreme care in fabricating, handling, shipping, installing and bracing. Refer to and follow the latest edition of BCSI (Building Component Safety Information, by TPI and WTCA) for safety practices prior to performing these functions. Installers shall provide temporary bracing per BCSI. Unless noted otherwise, top chord shall have properly attached structural sheathing and bottom chord shall have a properly attached rigid ceiling. Locations shown for permanent lateral restraint of webs shall have bracing installed per BCSI sections B3, B7 or B10, as applicable.

ITW Building Components Group Inc. (ITWBCG) shall not be responsible for any deviation from this design, any failure to build the truss in conformance with ANSI/TPI 1, or for handling, shipping, installation and bracing of trusses. Apply plates to each face of truss and position as shown above and on the Joint Details, unless noted otherwise. Refer to drawings 160A-Z for standard plate positions. A seal on this drawing or cover page listing this drawing, indicates acceptance of professional engineering responsibility solely for the design shown. The suitability and use of this design for any structure is the responsibility of the Building Designer per ANSI/TPI 1 Sec.2. For more information see: This job's general notes page; ITW-BCG: www.itwbcg.com; TPI: www.tpinst.org; WTCA: www.sbcindustry.com; ICC: www.iccsafe.org

TC LL	20.0 PSF	REF	R215-- 76711
TC DL	10.0 PSF	DATE	01/22/13
BC DL	10.0 PSF	DRW	HCUSR215 13022021
BC LL	0.0 PSF	HC-ENG	KD/AP
TOT.LD.	40.0 PSF	SEQN-	362724
DUR.FAC.	1.25	FROM	CDM
SPACING	24.0"	JREF-	1UT3215_Z01

(8025-/DERRINGTON PROPERTIES /Plumb Level Construction -- LAKE CITY, FL - G14)

THIS DWG PREPARED FROM COMPUTER INPUT (LOADS & DIMENSIONS) SUBMITTED BY TRUSS MFR.

Top chord 2x4 SP_#2_N__12A :T1, T2 2x4 SP_SS_12A:
Bot chord 2x4 SP_#2_N__12A
Webs 2x4 SP_#2_N__12A

Lumber grades designated with "12A" use design values approved 1/5/2012 by ALSC.

Max JT VERT DEFL: LL: 0.15" DL: 0.22" recommended camber 3/8"

In lieu of structural panels use purlins to brace all flat TC @ 24" OC.

Deflection meets L/240 live and L/180 total load. Creep increase factor for dead load is 1.50.

(**) 1 plate(s) require special positioning. Refer to scaled plate plot details for special positioning requirements.

130 mph wind, 15.00 ft mean hgt, ASCE 7-10, CLOSED bldg, not located within 9.00 ft from roof edge, RISK CAT II, EXP C, wind TC DL=5.0 psf, wind BC DL=5.0 psf. GCpi(+/-)=0.18

Wind loads and reactions based on MWFRS with additional C&C member design.

Bottom chord checked for 10.00 psf non-concurrent live load.

The overall height of this truss excluding overhang is 7-8-7.

MWFRS loads based on trusses located at least 15.00 ft. from roof edge.

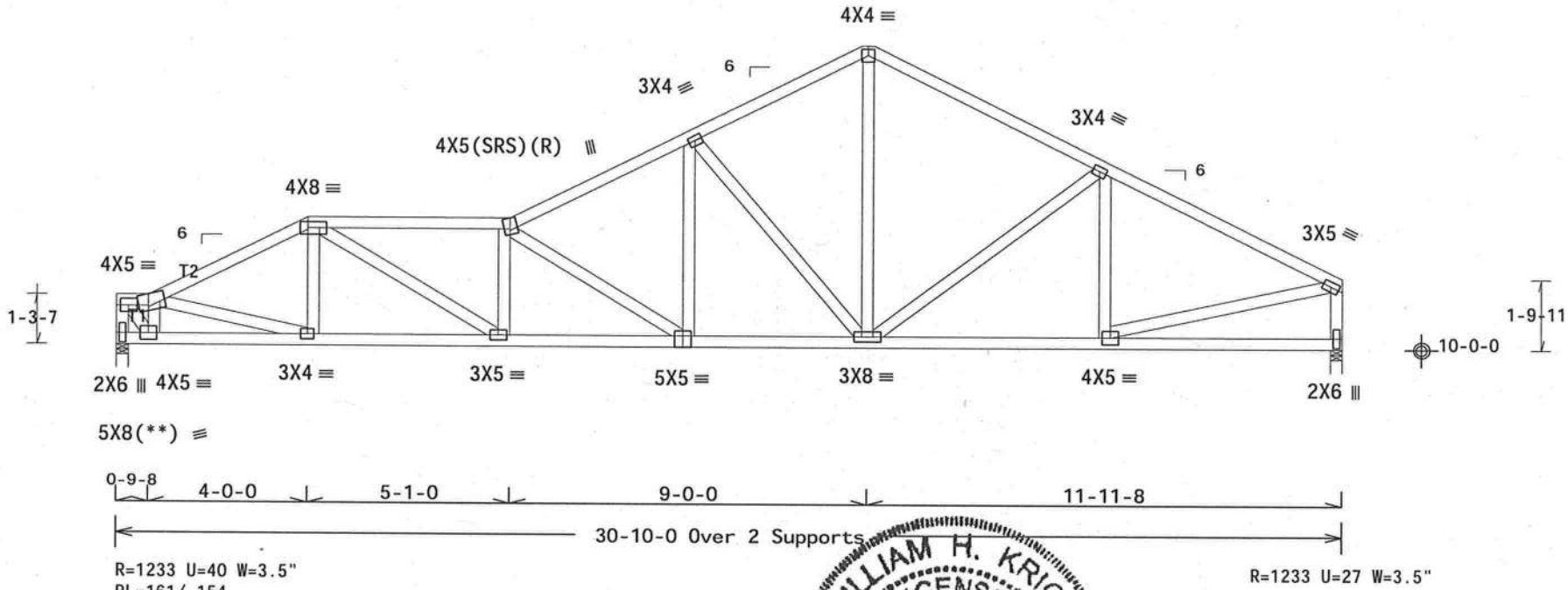

Design Crit: FBC2010Res/TPI-2007(STD)
FT/RT=20%(0%)/10(0)

PLT TYP. Wave

10.03.11.0209.20 QTY:1 FL/-/5/-/-/R/- Scale =.25"/Ft.

WILLIAM H. KRICK LICENSE No. 70861 STATE OF FLORIDA PROFESSIONAL ENGINEER

01/22/2013

ALPINE
ITW Building Components Group Inc.
Haines City, FL 33844
FL COA #0 278

WARNING READ AND FOLLOW ALL NOTES ON THIS SHEET!
IMPORTANT FURNISH THIS DESIGN TO ALL CONTRACTORS INCLUDING INSTALLERS.

Trusses require extreme care in fabricating, handling, shipping, installing and bracing. Refer to and follow the latest edition of BCSI (Building Component Safety Information, by TPI and WTCA) for safety practices prior to performing these functions. Installers shall provide temporary bracing per BCSI. Unless noted otherwise, top chord shall have properly attached structural sheathing and bottom chord shall have a properly attached rigid ceiling. Locations shown for permanent lateral restraint of webs shall have bracing installed per BCSI sections B3, B7 or B10, as applicable.

ITW Building Components Group Inc. (ITWBCG) shall not be responsible for any deviation from this design, any failure to build the truss in conformance with ANSI/TPI 1, or for handling, shipping, installation and bracing of trusses. Apply plates to each face of truss and position as shown above and on the Joint Details, unless noted otherwise. Refer to drawings 160A-Z for standard plate positions. A seal on this drawing or cover page listing this drawing, indicates acceptance of professional engineering responsibility solely for the design shown. The suitability and use of this design for any structure is the responsibility of the Building Designer per ANSI/TPI 1 Sec.2. For more information see: This job's general notes page; ITW-BCG: www.itwbcg.com; TPI: www.tpinst.org; WTCA: www.sbcindustry.com; ICC: www.iccsafe.org

TC LL	20.0 PSF	REF	R215-- 76712
TC DL	10.0 PSF	DATE	01/22/13
BC DL	10.0 PSF	DRW	HCUSR215 13022022
BC LL	0.0 PSF	HC-ENG	KD/AP
TOT.LD.	40.0 PSF	SEQN-	362763
DUR.FAC.	1.25	FROM	CDM
SPACING	24.0"	JREF-	1UT3215_Z01

THIS DWG PREPARED FROM COMPUTER INPUT (LOADS & DIMENSIONS) SUBMITTED BY TRUSS MFR.

(8025-/DERRINGTON PROPERTIES /Plumb Level Construction -- LAKE CITY, FL - G15)

Top chord 2x4 SP_#2_N__12A :T2, T5 2x4 SP_SS_12A:
Bot chord 2x4 SP_SS_12A
Webs 2x4 SP_#2_N__12A
:Lt Slider 2x4 SP_#2_N__12A: BLOCK LENGTH = 1.682'

Lumber grades designated with "12A" use design values approved 1/5/2012 by ALSC.

In lieu of structural panels use purlins to brace all flat TC @ 24" OC.

Deflection meets L/240 live and L/180 total load. Creep increase factor for dead load is 1.50.

130 mph wind, 15.00 ft mean hgt, ASCE 7-10, CLOSED bldg, not located within 9.00 ft from roof edge, RISK CAT II, EXP C, wind TC DL=5.0 psf, wind BC DL=5.0 psf. GCpi(+/-)=0.18

Wind loads and reactions based on MWFRS with additional C&C member design.

Right end vertical not exposed to wind pressure.

Bottom chord checked for 10.00 psf non-concurrent live load.

The overall height of this truss excluding overhang is 6-8-7.

MWFRS loads based on trusses located at least 15.00 ft. from roof edge.

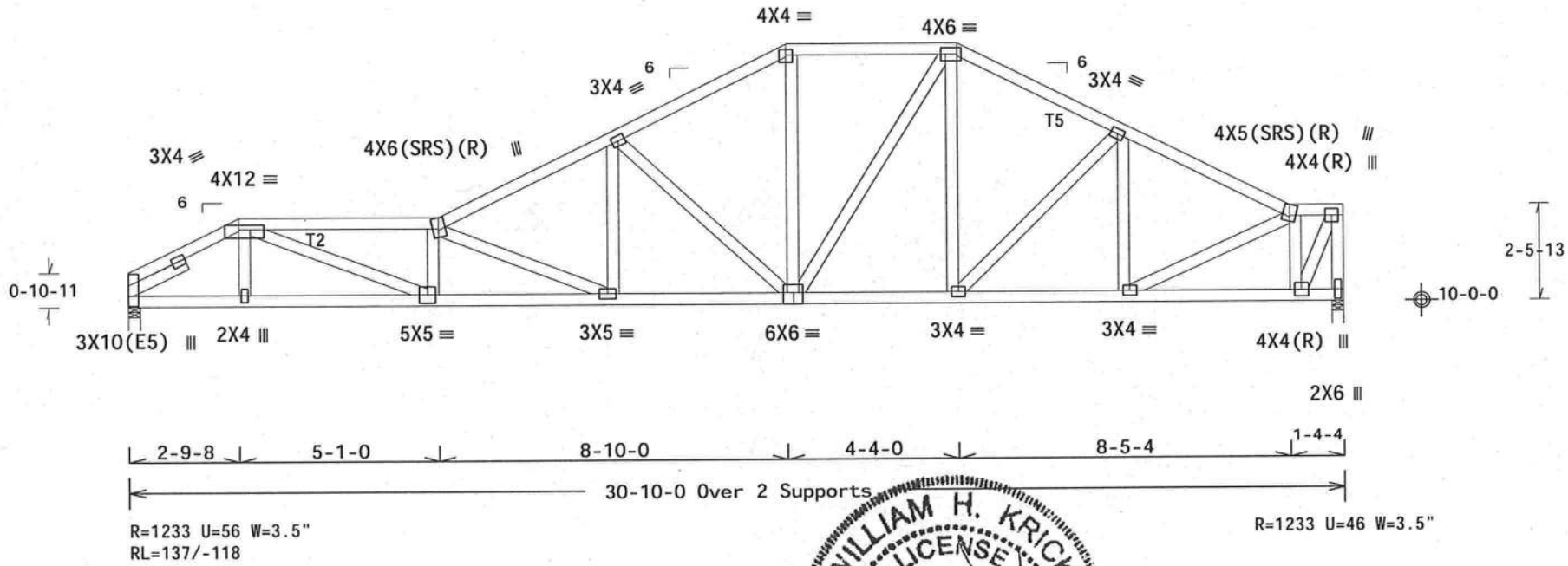

Design Crit: FBC2010Res/TPI-2007(STD)
FT/RT=20%(0%)/10(0) 10.03.11.0209 20 QTY:1 FL/-/5/-/-/R/-

PLT TYP. Wave

Scale =.25"/Ft.

WILLIAM H. KRICK LICENSE No. 70861 STATE OF FLORIDA PROFESSIONAL ENGINEER

01/22/2013

ALPINE
ITW Building Components Group Inc.
Haines City, FL 33844
FL COA #0 278

WARNING READ AND FOLLOW ALL NOTES ON THIS SHEET!
IMPORTANT FURNISH THIS DESIGN TO ALL CONTRACTORS INCLUDING INSTALLERS.

Trusses require extreme care in fabricating, handling, shipping, installing and bracing. Refer to and follow the latest edition of BCSI (Building Component Safety Information, by TPI and WTCA) for safety practices prior to performing these functions. Installers shall provide temporary bracing per BCSI. Unless noted otherwise, top chord shall have properly attached structural sheathing and bottom chord shall have a properly attached rigid ceiling. Locations shown for permanent lateral restraint of webs shall have bracing installed per BCSI sections B3, B7 or B10, as applicable.

ITW Building Components Group Inc. (ITWBCG) shall not be responsible for any deviation from this design, any failure to build the truss in conformance with ANSI/TPI 1, or for handling, shipping, installation and bracing of trusses. Apply plates to each face of truss and position as shown above and on the Joint Details, unless noted otherwise. Refer to drawings 160A-Z for standard plate positions. A seal on this drawing or cover page listing this drawing, indicates acceptance of professional engineering responsibility solely for the design shown. The suitability and use of this design for any structure is the responsibility of the Building Designer per ANSI/TPI 1 Sec.2. For more information see: This job's general notes page; ITW-BCG: www.itwbcg.com; TPI: www.tpinst.org; WTCA: www.sbcindustry.com; ICC: www.iccsafe.org

TC LL	20.0 PSF	REF	R215-- 76713
TC DL	10.0 PSF	DATE	01/22/13
BC DL	10.0 PSF	DRW	HCUSR215 13022023
BC LL	0.0 PSF	HC-ENG	KD/AP
TOT.LD.	40.0 PSF	SEQN-	362771
DUR.FAC.	1.25	FROM	CDM
SPACING	24.0"	JREF-	1UT3215_Z01

Top chord 2x4 SP_#2_N__12A :T2, T3 2x4 SP_SS_12A:
Bot chord 2x4 SP_SS_12A :B2 2x4 SP_#2_N__12A:
Webs 2x4 SP_#2_N__12A

Lumber grades designated with "12A" use design values approved 1/5/2012 by ALSC.

In lieu of structural panels use purlins to brace all flat TC @ 24" OC.

The overall height of this truss excluding overhang is 5-8-7.

MWFRS loads based on trusses located at least 15.00 ft. from roof edge.

130 mph wind, 15.00 ft mean hgt, ASCE 7-10, CLOSED bldg, not located within 9.00 ft from roof edge, RISK CAT II, EXP C, wind TC DL=5.0 psf, wind BC DL=5.0 psf. GCpi(+/-)=0.18

Wind loads and reactions based on MWFRS with additional C&C member design.

Bottom chord checked for 10.00 psf non-concurrent live load.

Deflection meets L/240 live and L/180 total load. Creep increase factor for dead load is 1.50.

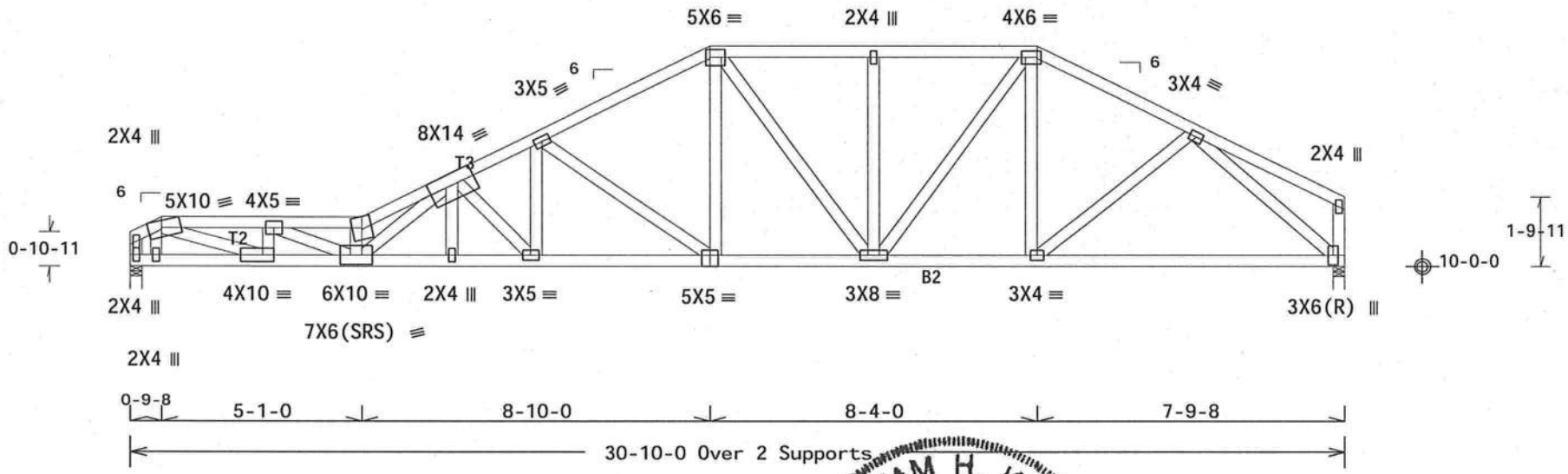

R=1233 U=75 W=3.5"
RL=116/-105

R=1233 U=53 W=3.5"

Design Crit: FBC2010Res/TPI-2007(STD)

PLT TYP. Wave FT/RT=20%(0%)/10(0) 10.03.11.0209.20 QTY:1 FL/-/5/-/-/R/- Scale =.25"/Ft.

WILLIAM H. KRICK LICENSE No. 70861 STATE OF FLORIDA PROFESSIONAL ENGINEER 01/22/2013

ALPINE
ITW Building Components Group Inc.
Haines City, FL 33844
FL COA #0 278

WARNING READ AND FOLLOW ALL NOTES ON THIS SHEET!
IMPORTANT FURNISH THIS DESIGN TO ALL CONTRACTORS INCLUDING INSTALLERS.

Trusses require extreme care in fabricating, handling, shipping, installing and bracing. Refer to and follow the latest edition of BCSI (Building Component Safety Information, by TPI and WTCA) for safety practices prior to performing these functions. Installers shall provide temporary bracing per BCSI. Unless noted otherwise, top chord shall have properly attached structural sheathing and bottom chord shall have a properly attached rigid ceiling. Locations shown for permanent lateral restraint of webs shall have bracing installed per BCSI sections B3, B7 or B10, as applicable.

ITW Building Components Group Inc. (ITWBCG) shall not be responsible for any deviation from this design, or any failure to build the truss in conformance with ANSI/TPI 1, or for handling, shipping, installation and bracing of trusses. Apply plates to each face of truss and position as shown above and on the Joint Details, unless noted otherwise. Refer to drawings 160A-Z for standard plate positions. A seal on this drawing or cover page listing this drawing, indicates acceptance of professional engineering responsibility solely for the design shown. The suitability and use of this design for any structure is the responsibility of the Building Designer per ANSI/TPI 1 Sec.2. For more information see: This job's general notes page; ITW-BCG: www.itwbcg.com; TPI: www.tpinst.org; WTCA: www.sbcindustry.com; ICC: www.iccsafe.org

TC LL	20.0 PSF	REF	R215-- 76714
TC DL	10.0 PSF	DATE	01/22/13
BC DL	10.0 PSF	DRW	HCUSR215 13022024
BC LL	0.0 PSF	HC-ENG	KD/AP
TOT.LD.	40.0 PSF	SEQN-	362799
DUR.FAC.	1.25	FROM	CDM
SPACING	24.0"	JREF-	1UT3215_Z01

(8025-/DERRINGTON PROPERTIES /Plumb Level Construction -- LAKE CITY, FL - H)

Top chord 2x4 SP_#2_N__12A :T2 2x6 SP_#2_N_12A:
Bot chord 2x6 SP_#2_N_12A
Webs 2x4 SP_#2_N__12A

Lumber grades designated with "12A" use design values approved 1/5/2012 by ALSC.

Special loads
------(Lumber Dur.Fac.=1.25 / Plate Dur.Fac.=1.25)

TC- From	60 plf at	0.00 to	60 plf at	1.87
TC- From	30 plf at	1.87 to	30 plf at	16.71
TC- From	60 plf at	16.71 to	60 plf at	18.58
BC- From	10 plf at	0.00 to	10 plf at	18.58

130 mph wind, 15.00 ft mean hgt, ASCE 7-10, CLOSED bldg, Located anywhere in roof, RISK CAT II, EXP C, wind TC DL=5.0 psf, wind BC DL=5.0 psf. GCpi(+/-)=0.18

Wind loads and reactions based on MWFRS.

In lieu of structural panels use purlins to brace all flat TC @ 24" OC.

Deflection meets L/240 live and L/180 total load. Creep increase factor for dead load is 1.50.

The overall height of this truss excluding overhang is 1-3-7.

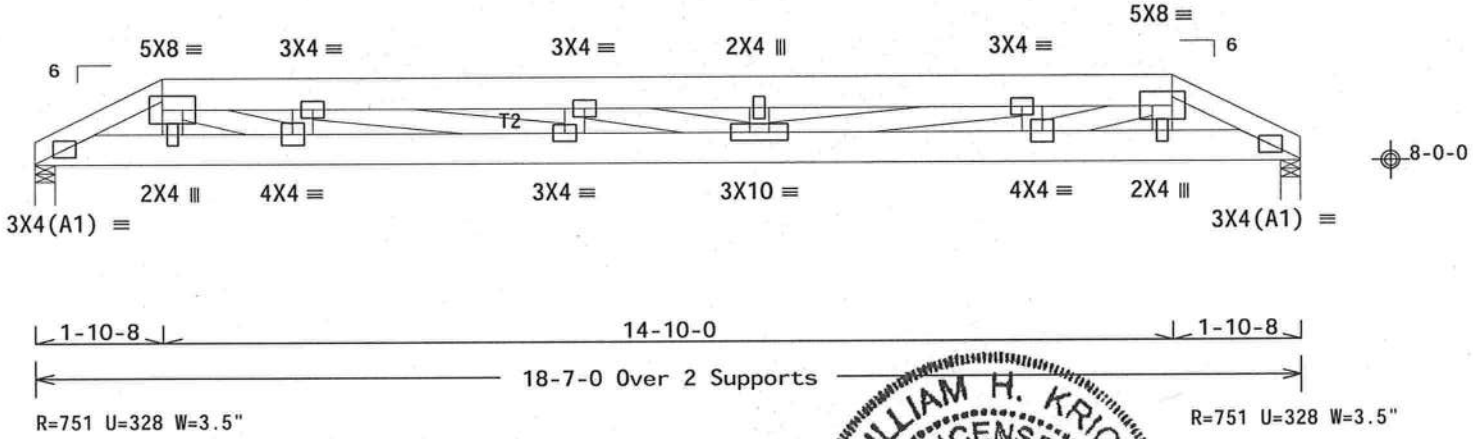

Design Crit: FBC2010Res/TPI-2007(STD)
FT/RT=20%(0%)/10(0)

PLT TYP. Wave

10.03.11.0209.20 QTY: 1 FL/-/5/-/-/R/- Scale =.375"/Ft.

WILLIAM H. KRICK LICENSE No. 70861 STATE OF FLORIDA PROFESSIONAL ENGINEER
01/22/2013

ALPINE
ITW Building Components Group Inc.
Haines City, FL 33844
FL COA #0 278

WARNING READ AND FOLLOW ALL NOTES ON THIS SHEET!
IMPORTANT FURNISH THIS DESIGN TO ALL CONTRACTORS INCLUDING INSTALLERS.

Trusses require extreme care in fabricating, handling, shipping, installing and bracing. Refer to and follow the latest edition of BCSI (Building Component Safety Information, by TPI and WTCA) for safety practices prior to performing these functions. Installers shall provide temporary bracing per BCSI. Unless noted otherwise, top chord shall have properly attached structural sheathing and bottom chord shall have a properly attached rigid ceiling. Locations shown for permanent lateral restraint of webs shall have bracing installed per BCSI sections B3, B7 or B10, as applicable.

ITW Building Components Group Inc. (ITWBCG) shall not be responsible for any deviation from this design, any failure to build the truss in conformance with ANSI/TPI 1, or for handling, shipping, installation and bracing of trusses. Apply plates to each face of truss and position as shown above and on the Joint Details, unless noted otherwise. Refer to drawings 160A-Z for standard plate positions. A seal on this drawing or cover page listing this drawing, indicates acceptance of professional engineering responsibility solely for the design shown. The suitability and use of this design for any structure is the responsibility of the Building Designer per ANSI/TPI 1 Sec.2. For more information see: This job's general notes page; ITW-BCG: www.itwbcg.com; TPI: www.tpinst.org; WTCA: www.sbcindustry.com; ICC: www.iccsafe.org

TC LL	20.0 PSF	REF	R215-- 76715
TC DL	10.0 PSF	DATE	01/22/13
BC DL	10.0 PSF	DRW	HCUSR215 13022041
BC LL	0.0 PSF	HC-ENG	KD/AP
TOT.LD.	40.0 PSF	SEQN-	362839
DUR.FAC.	1.25	FROM	CDM
SPACING	24.0"	JREF-	1UT3215_Z01

(8025-/DERRINGTON PROPERTIES /Plumb Level Construction -- LAKE CITY, FL - H1)

Top chord 2x4 SP_#2_N__12A
Bot chord 2x4 SP_SS_12A
Webs 2x4 SP_#2_N__12A

Lumber grades designated with "12A" use design values approved 1/5/2012 by ALSC.

Max JT VERT DEFL: LL: 0.23" DL: 0.34" recommended camber 5/8"

In lieu of structural panels use purlins to brace all flat TC @ 24" OC.

Bottom chord checked for 10.00 psf non-concurrent live load.

Deflection meets L/240 live and L/180 total load. Creep increase factor for dead load is 1.50.

130 mph wind, 15.00 ft mean hgt, ASCE 7-10, CLOSED bldg, not located within 4.50 ft from roof edge, RISK CAT II, EXP C, wind TC DL=5.0 psf, wind BC DL=5.0 psf. GCpi(+/-)=0.18

Wind loads and reactions based on MWFRS with additional C&C member design.

These support conditions used at bearings indicated
(H1) = ITW (KC) ATH29 w/ (2)2x8 SP_SS_12A supporting member.
Supported Member Face: (4) 0.131"x1.5" nails
Supporting Member Face: (8) 0.128"x3" nails
Supporting Member Top: (4) 0.128"x3" nails
(H2) = (J) Hanger not calculated (2)2x4 SP_#2_N__12A supporting member.

The overall height of this truss excluding overhang is 2-3-7.

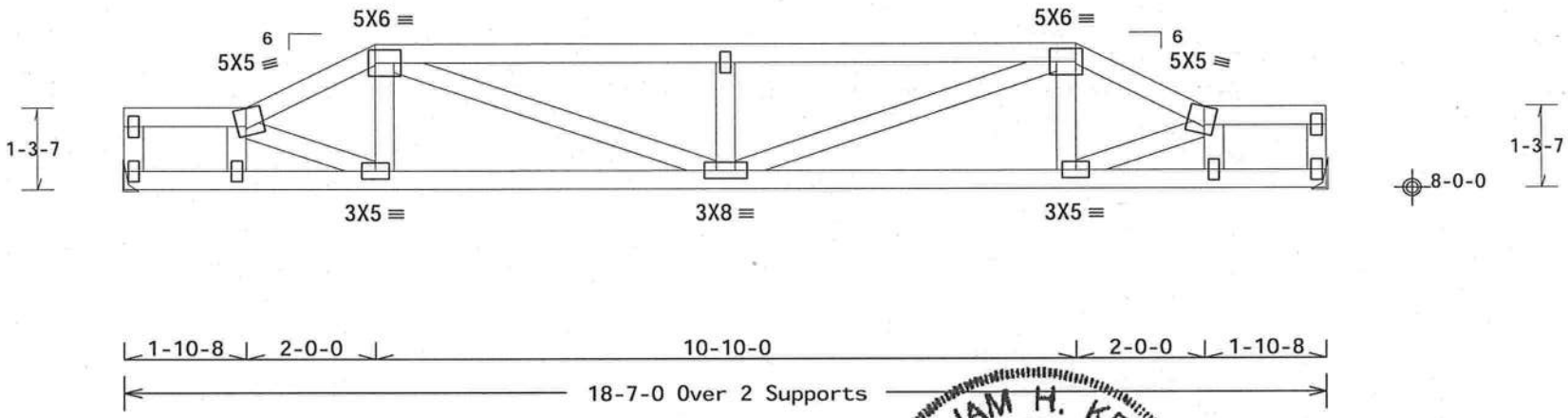

Note: All Plates Are 2X4 Except As Shown.

Design Crit: FBC2010Res/TPI-2007(STD)

PLT TYP. Wave

FT/RT=20%(0%)/10(0) 10.03.11.0209.20 QTY:1 FL/-/5/-/-/R/- Scale =.375"/Ft.

WILLIAM H. KRICK LICENSE No. 70861 STATE OF FLORIDA PROFESSIONAL ENGINEER

01/22/2013

ALPINE
ITW Building Components Group Inc.
Haines City, FL 33844
FL COA #0 278

WARNING READ AND FOLLOW ALL NOTES ON THIS SHEET!
IMPORTANT FURNISH THIS DESIGN TO ALL CONTRACTORS INCLUDING INSTALLERS.

Trusses require extreme care in fabricating, handling, shipping, installing and bracing. Refer to and follow the latest edition of BCSI (Building Component Safety Information, by TPI and WTCA) for safety practices prior to performing these functions. Installers shall provide temporary bracing per BCSI. Unless noted otherwise, top chord shall have properly attached structural sheathing and bottom chord shall have a properly attached rigid ceiling. Locations shown for permanent lateral restraint of webs shall have bracing installed per BCSI sections B3, B7 or B10, as applicable.

ITW Building Components Group Inc. (ITWBCG) shall not be responsible for any deviation from this design, any failure to build the truss in conformance with ANSI/TPI 1, or for handling, shipping, installation and bracing of trusses. Apply plates to each face of truss and position as shown above and on the Joint Details, unless noted otherwise. Refer to drawings 160A-Z for standard plate positions. A seal on this drawing or cover page listing this drawing, indicates acceptance of professional engineering responsibility solely for the design shown. The suitability and use of this design for any structure is the responsibility of the Building Designer per ANSI/TPI 1 Sec.2. For more information see: This job's general notes page; ITW-BCG: www.itwbcg.com; TPI: www.tpinst.org; WTCA: www.sbcindustry.com; ICC: www.iccsafe.org

TC LL	20.0 PSF	REF	R215-- 76716
TC DL	10.0 PSF	DATE	01/22/13
BC DL	10.0 PSF	DRW	HCUSR215 13022035
BC LL	0.0 PSF	HC-ENG	KD/AP
TOT.LD.	40.0 PSF	SEQN-	362605
DUR.FAC.	1.25	FROM	CDM
SPACING	24.0"	JREF-	1UT3215_Z01

(8025-/DERRINGTON PROPERTIES /Plumb Level Construction -- LAKE CITY, FL - H2)

Top chord 2x4 SP_#2_N__12A
Bot chord 2x4 SP_#2_N__12A
Webs 2x4 SP_#2_N__12A

Lumber grades designated with "12A" use design values approved 1/5/2012 by ALSC.

End verticals not exposed to wind pressure.

In lieu of structural panels use purlins to brace all flat TC @ 24" OC.

Bottom chord checked for 10.00 psf non-concurrent live load.

Deflection meets L/240 live and L/180 total load. Creep increase factor for dead load is 1.50.

MWFRS loads based on trusses located at least 7.50 ft. from roof edge.

130 mph wind, 15.00 ft mean hgt, ASCE 7-10, CLOSED bldg, not located within 4.50 ft from roof edge, RISK CAT II, EXP C, wind TC DL=5.0 psf, wind BC DL=5.0 psf. GCpi(+/-)=0.18

Wind loads and reactions based on MWFRS with additional C&C member design.

These support conditions used at bearings indicated
(H1) = ITW (KC) ATH29 w/ (2)2x8 SP_SS_12A supporting member.
Supported Member Face: (4) 0.131"x1.5" nails
Supporting Member Face: (8) 0.128"x3" nails
Supporting Member Top: (4) 0.128"x3" nails
(H2) = (J) Hanger not calculated (2)2x4 SP_#2_N__12A supporting member.

The overall height of this truss excluding overhang is 3-3-7.

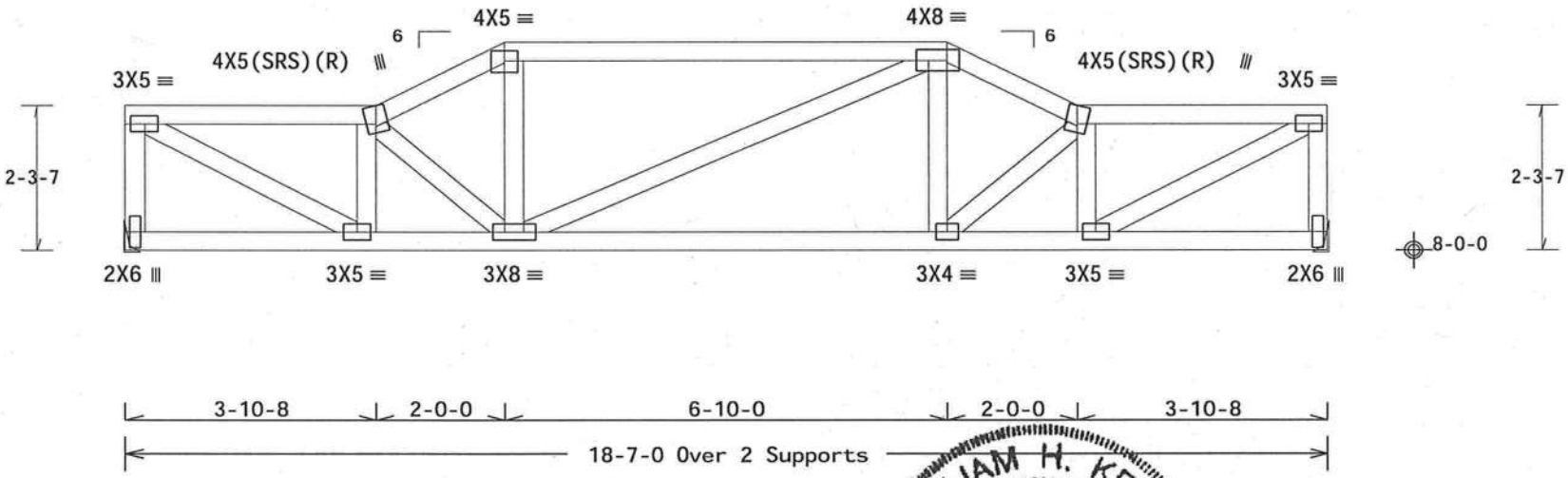

Design Crit: FBC2010Res/TPI-2007(STD)
FT/RT=20%(0%)/10(0)

PLT TYP. Wave

10.03.11.0209.20 QTY 1

FL/-/5/-/-/R/-

Scale =.375"/Ft.

WILLIAM H. KRICK
LICENSE
No. 70861
STATE OF FLORIDA
PROFESSIONAL ENGINEER
01/22/2013

ALPINE
ITW Building Components Group Inc.
Haines City, FL 33844
FL COA #0 278

WARNING READ AND FOLLOW ALL NOTES ON THIS SHEET!
IMPORTANT FURNISH THIS DESIGN TO ALL CONTRACTORS INCLUDING INSTALLERS.

Trusses require extreme care in fabricating, handling, shipping, installing and bracing. Refer to and follow the latest edition of BCSI (Building Component Safety Information, by TPI and WTCA) for safety practices prior to performing these functions. Installers shall provide temporary bracing per BCSI. Unless noted otherwise, top chord shall have properly attached structural sheathing and bottom chord shall have a properly attached rigid ceiling. Locations shown for permanent lateral restraint of webs shall have bracing installed per BCSI sections B3, B7 or B10, as applicable.

ITW Building Components Group Inc. (ITWBCG) shall not be responsible for any deviation from this design, any failure to build the truss in conformance with ANSI/TPI 1, or for handling, shipping, installation and bracing of trusses. Apply plates to each face of truss and position as shown above and on the Joint Details, unless noted otherwise. Refer to drawings 160A-Z for standard plate positions. A seal on this drawing or cover page listing this drawing, indicates acceptance of professional engineering responsibility solely for the design shown. The suitability and use of this design for any structure is the responsibility of the Building Designer per ANSI/TPI 1 Sec.2. For more information see: This job's general notes page; ITW-BCG: www.itwbcg.com; TPI: www.tpinst.org; WTCA: www.sbcindustry.com; ICC: www.iccsafe.org

TC LL	20.0 PSF	REF	R215-- 76717
TC DL	10.0 PSF	DATE	01/22/13
BC DL	10.0 PSF	DRW	HCUSR215 13022036
BC LL	0.0 PSF	HC-ENG	KD/AP
TOT.LD.	40.0 PSF	SEQN-	362606
DUR.FAC.	1.25	FROM	CDM
SPACING	24.0"	JREF-	1UT3215_Z01

(8025-/DERRINGTON PROPERTIES /Plumb Level Construction -- LAKE CITY, FL - H3)

Top chord 2x4 SP_#2_N__12A
Bot chord 2x4 SP_#2_N__12A
Webs 2x4 SP_#2_N__12A

Lumber grades designated with "12A" use design values approved 1/5/2012 by ALSC.

End verticals not exposed to wind pressure.

In lieu of structural panels use purlins to brace all flat TC @ 24" OC.

Bottom chord checked for 10.00 psf non-concurrent live load.

Deflection meets L/240 live and L/180 total load. Creep increase factor for dead load is 1.50.

MWFRS loads based on trusses located at least 7.50 ft. from roof edge.

130 mph wind, 15.00 ft mean hgt, ASCE 7-10, CLOSED bldg, not located within 9.00 ft from roof edge, RISK CAT II, EXP C, wind TC DL=5.0 psf, wind BC DL=5.0 psf. GCpi(+/-)=0.18

Wind loads and reactions based on MWFRS with additional C&C member design.

These support conditions used at bearings indicated
(H1) = ITW (KC) ATH29 w/ (2)2x8 SP_SS_12A supporting member.
Supported Member Face: (4) 0.131"x1.5" nails
Supporting Member Face: (8) 0.128"x3" nails
Supporting Member Top: (4) 0.128"x3" nails
(H2) = (J) Hanger not calculated (2)2x4 SP_#2_N__12A supporting member.

The overall height of this truss excluding overhang is 4-3-7.

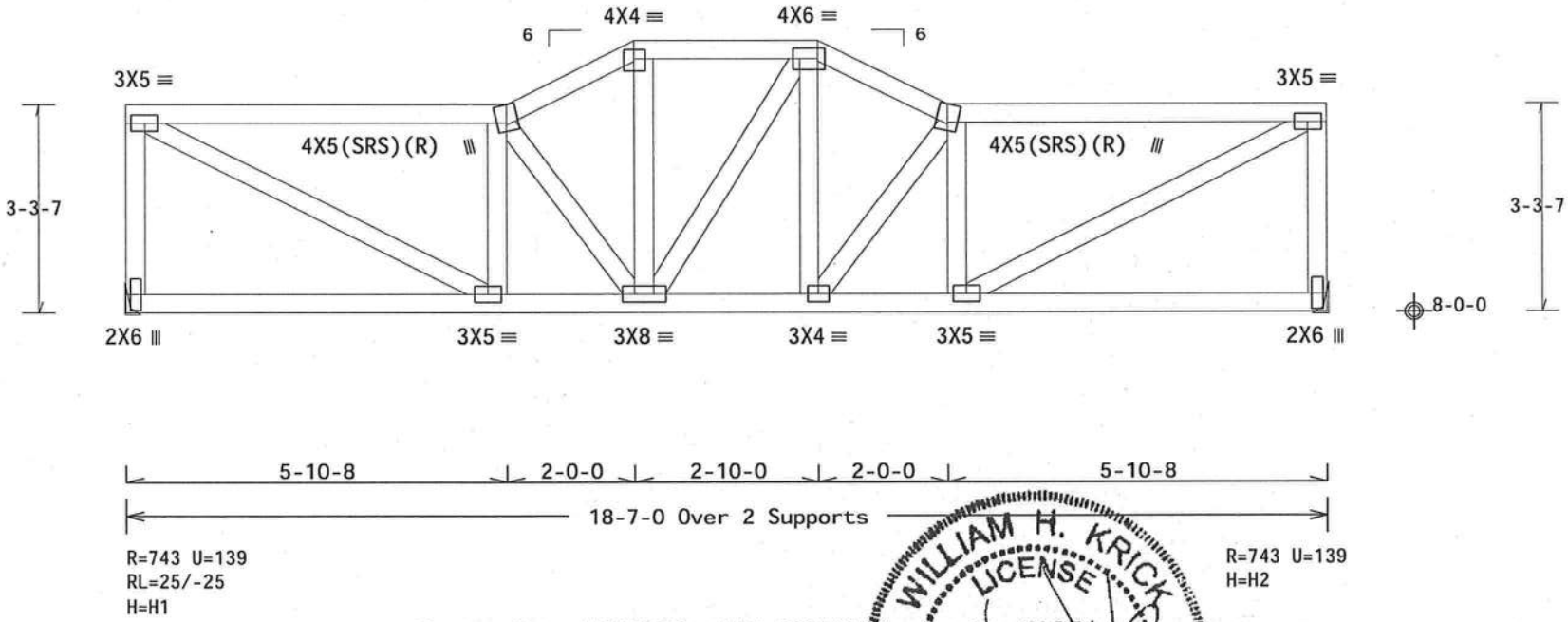

Design Crit: FBC2010Res/TPI-2007(STD)
FT/RT=20%(0%)/10(0)

PLT TYP. Wave

10.03.11.0209.20 QTY 1 FL/-/5/-/-/R/- Scale =.375"/Ft.

WILLIAM H. KRICK LICENSE No. 70861 STATE OF FLORIDA PROFESSIONAL ENGINEER
01/22/2013

ALPINE
ITW Building Components Group Inc.
Haines City, FL 33844
FL COA #0 278

WARNING READ AND FOLLOW ALL NOTES ON THIS SHEET!
IMPORTANT FURNISH THIS DESIGN TO ALL CONTRACTORS INCLUDING INSTALLERS.

Trusses require extreme care in fabricating, handling, shipping, installing and bracing. Refer to and follow the latest edition of BCSI (Building Component Safety Information, by TPI and WTCA) for safety practices prior to performing these functions. Installers shall provide temporary bracing per BCSI. Unless noted otherwise, top chord shall have properly attached structural sheathing and bottom chord shall have a properly attached rigid ceiling. Locations shown for permanent lateral restraint of webs shall have bracing installed per BCSI sections B3, B7 or B10, as applicable.

ITW Building Components Group Inc. (ITWBCG) shall not be responsible for any deviation from this design, any failure to build the truss in conformance with ANSI/TPI 1, or for handling, shipping, installation and bracing of trusses. Apply plates to each face of truss and position as shown above and on the Joint Details, unless noted otherwise. Refer to drawings 160A-Z for standard plate positions. A seal on this drawing or cover page listing this drawing, indicates acceptance of professional engineering responsibility solely for the design shown. The suitability and use of this design for any structure is the responsibility of the Building Designer per ANSI/TPI 1 Sec.2. For more information see: This job's general notes page; ITW-BCG: www.itwbcg.com; TPI: www.tpinst.org; WTCA: www.sbcindustry.com; ICC: www.iccsafe.org

TC LL	20.0 PSF	REF	R215-- 76718
TC DL	10.0 PSF	DATE	01/22/13
BC DL	10.0 PSF	DRW	HCUSR215 13022037
BC LL	0.0 PSF	HC-ENG	KD/AP
TOT.LD.	40.0 PSF	SEQN-	362607
DUR.FAC.	1.25	FROM	CDM
SPACING	24.0"	JREF-	1UT3215_Z01

(8025-/DERRINGTON PROPERTIES /Plumb Level Construction -- LAKE CITY, FL - J)

Top chord 2x4 SP_#2_N__12A
Bot chord 2x4 SP_#2_N__12A
Webs 2x4 SP_#2_N__12A

Lumber grades designated with "12A" use design values approved 1/5/2012 by ALSC.

130 mph wind, 15.00 ft mean hgt, ASCE 7-10, CLOSED bldg, not located within 9.00 ft from roof edge, RISK CAT II, EXP C, wind TC DL=5.0 psf, wind BC DL=5.0 psf. GCpi(+/-)=0.18

Wind loads and reactions based on MWFRS.

Bottom chord checked for 10.00 psf non-concurrent live load.

The overall height of this truss excluding overhang is 3-9-14.

Special loads
------(Lumber Dur.Fac.=1.25 / Plate Dur.Fac.=1.25)
TC- From 0 plf at -2.83 to 60 plf at 0.00
TC- From 2 plf at 0.00 to 2 plf at 9.90
BC- From 0 plf at -2.83 to 4 plf at 0.00
BC- From 2 plf at 0.00 to 2 plf at 9.90
TC- -73.40 lb Conc. Load at 1.48
TC- 95.69 lb Conc. Load at 4.31
TC- 232.01 lb Conc. Load at 7.13
BC- -8.12 lb Conc. Load at 1.48
BC- 90.98 lb Conc. Load at 4.31
BC- 173.27 lb Conc. Load at 7.13

Deflection meets L/240 live and L/180 total load. Creep increase factor for dead load is 1.50.

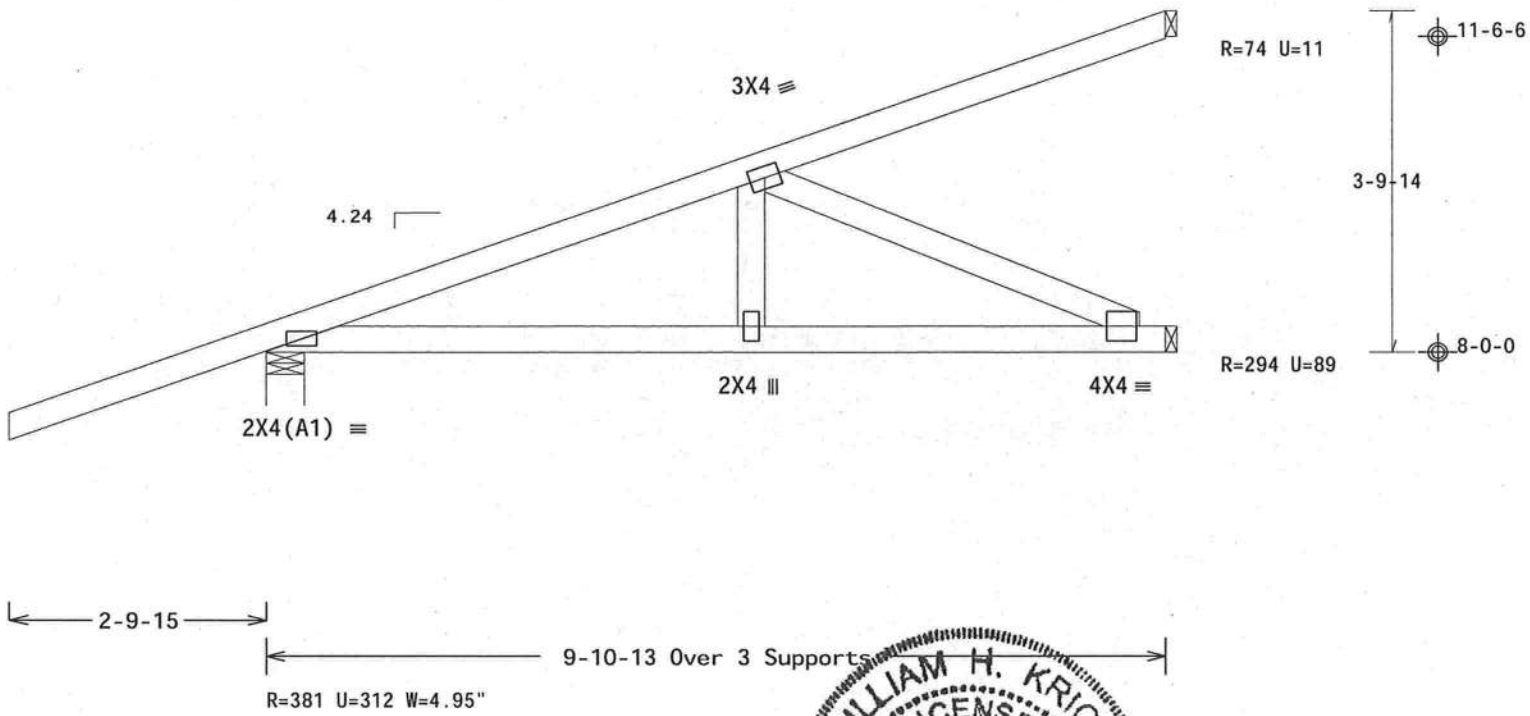

Design Crit: FBC2010Res/TPI-2007(STD)
PLT TYP. Wave FT/RT=20%(0%)/10(0) 10.03.11.0209.20 QTY:4 FL/-/5/-/-/R/- Scale =.5"/Ft.

WILLIAM H. KRICK LICENSE No. 70861 STATE OF FLORIDA PROFESSIONAL ENGINEER
01/22/2013

ALPINE
ITW Building Components Group Inc.
Haines City, FL 33844
FL COA #0 278

WARNING READ AND FOLLOW ALL NOTES ON THIS SHEET!
IMPORTANT FURNISH THIS DESIGN TO ALL CONTRACTORS INCLUDING INSTALLERS.

Trusses require extreme care in fabricating, handling, shipping, installing and bracing. Refer to and follow the latest edition of BCSI (Building Component Safety Information, by TPI and WTCA) for general practices prior to performing these functions. Installers shall provide temporary bracing per BCSI. Unless noted otherwise, top chord shall have properly attached structural sheathing and bottom chord shall have a properly attached rigid ceiling. Locations shown for permanent lateral restraint of webs shall have bracing installed per BCSI sections B3, B7 or B10, as applicable.

ITW Building Components Group Inc. (ITWBCG) shall not be responsible for any deviation from this design, any failure to build the truss in conformance with ANSI/TPI 1, or for handling, shipping, installation and bracing of trusses. Apply plates to each face of truss and position as shown above and on the Joint Details, unless noted otherwise. Refer to drawings 160A-Z for standard plate positions. A seal on this drawing or cover page listing this drawing, indicates acceptance of professional engineering responsibility solely for the design shown. The suitability and use of this design for any structure is the responsibility of the Building Designer per ANSI/TPI 1 Sec.2. For more information see: This job's general notes page; ITW-BCG: www.itwbcg.com; TPI: www.tpinst.org; WTCA: www.sbcindustry.com; ICC: www.iccsafe.org

TC LL	20.0 PSF	REF	R215-- 76719
TC DL	10.0 PSF	DATE	01/22/13
BC DL	10.0 PSF	DRW	HCUSR215 13022038
BC LL	0.0 PSF	HC-ENG	KD/AP
TOT.LD.	40.0 PSF	SEQN-	362590
DUR.FAC.	1.25	FROM	CDM
SPACING	24.0"	JREF-	1UT3215_Z01

(8025-/DERRINGTON PROPERTIES /Plumb Level Construction -- LAKE CITY, FL - J1)

Top chord 2x4 SP_#2_N__12A
Bot chord 2x4 SP_#2_N__12A

Lumber grades designated with "12A" use design values approved 1/5/2012 by ALSC.

Bottom chord checked for 10.00 psf non-concurrent live load.

The overall height of this truss excluding overhang is 0-10-3.

130 mph wind, 15.00 ft mean hgt, ASCE 7-10, CLOSED bldg, Located anywhere in roof, RISK CAT II, EXP C, wind TC DL=5.0 psf, wind BC DL=5.0 psf. GCpi(+/-)=0.18

Wind loads and reactions based on MWFRS with additional C&C member design.

Deflection meets L/240 live and L/180 total load. Creep increase factor for dead load is 1.50.

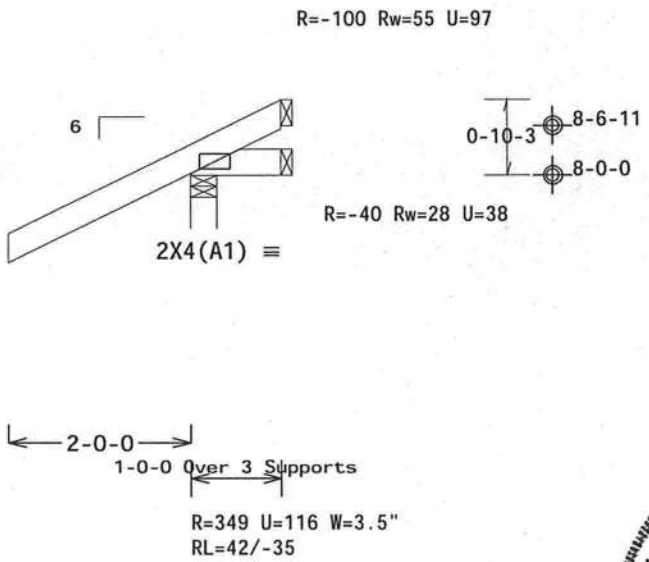

Design Crit: FBC2010Res/TPI-2007(STD)
FT/RT=20%(0%)/10(0)

PLT TYP. Wave

10.03.11.0209.20 QTY 22 FL/-/5/-/-/R/-

Scale =.5"/Ft.

WILLIAM H. KRICK
LICENSE
No. 70861
STATE OF FLORIDA
PROFESSIONAL ENGINEER
01/22/2013

ALPINE
ITW Building Components Group Inc.
Haines City, FL 33844
FL COA #0 278

WARNING READ AND FOLLOW ALL NOTES ON THIS SHEET!
IMPORTANT FURNISH THIS DESIGN TO ALL CONTRACTORS INCLUDING INSTALLERS.

Trusses require extreme care in fabricating, handling, shipping, installing and bracing. Refer to and follow the latest edition of BCSI (Building Component Safety Information, by TPI and WTCA) for recommended practices prior to performing these functions. Installers shall provide temporary bracing per BCSI. Unless noted otherwise, top chord shall have properly attached structural sheathing and bottom chord shall have a properly attached rigid ceiling. Locations shown for permanent lateral restraint of webs shall have bracing installed per BCSI sections B3, B7 or B10, as applicable.

ITW Building Components Group Inc. (ITWBCG) shall not be responsible for any deviation from this design, any failure to build the truss in conformance with ANSI/TPI 1, or for handling, shipping, installation & bracing of trusses. Apply plates to each face of truss and position as shown above and on the Joint Details, unless noted otherwise. Refer to drawings 160A-Z for standard plate positions. A seal on this drawing or cover page listing this drawing, indicates acceptance of professional engineering responsibility solely for the design shown. The suitability and use of this design for any structure is the responsibility of the Building Designer per ANSI/TPI 1 Sec.2. For more information see: This job's general notes page; ITW-BCG: www.itwbcg.com; TPI: www.tpinst.org; WTCA: www.sbcindustry.com; ICC: www.iccsafe.org

TC LL	20.0 PSF	REF	R215-- 76720
TC DL	10.0 PSF	DATE	01/22/13
BC DL	10.0 PSF	DRW	HCUSR215 13022039
BC LL	0.0 PSF	HC-ENG	KD/AP
TOT.LD.	40.0 PSF	SEQN-	362569
DUR.FAC.	1.25	FROM	CDM
SPACING	24.0"	JREF-	1UT3215_Z01

(8025-/DERRINGTON PROPERTIES /Plumb Level Construction -- LAKE CITY, FL - J2)

Top chord 2x4 SP_#2_N__12A
Bot chord 2x4 SP_#2_N__12A

Lumber grades designated with "12A" use design values approved 1/5/2012 by ALSC.

Bottom chord checked for 10.00 psf non-concurrent live load.

The overall height of this truss excluding overhang is 1-10-3.

130 mph wind, 15.00 ft mean hgt, ASCE 7-10, CLOSED bldg, Located anywhere in roof, RISK CAT II, EXP C, wind TC DL=5.0 psf, wind BC DL=5.0 psf. GCpi(+/-)=0.18

Wind loads and reactions based on MWFRS with additional C&C member design.

Deflection meets L/240 live and L/180 total load. Creep increase factor for dead load is 1.50.

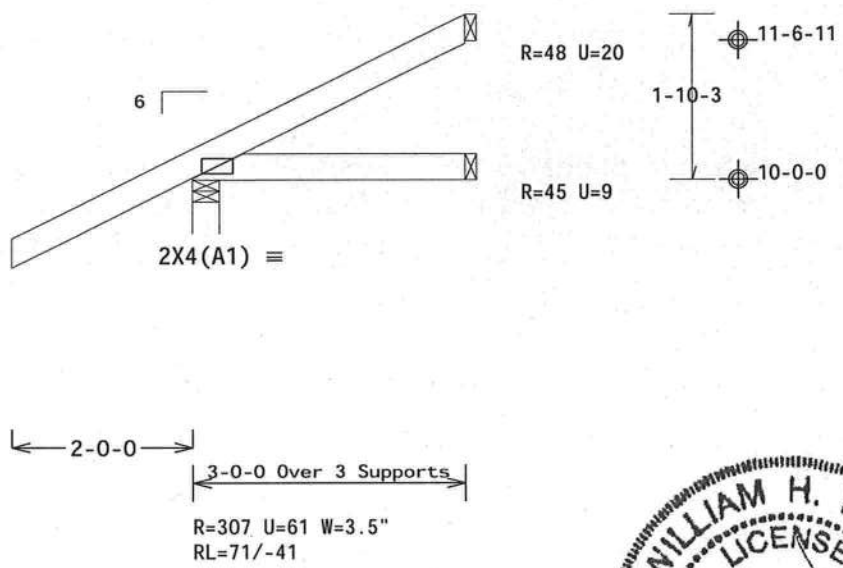

Design Crit: FBC2010Res/TPI-2007(STD)
FT/RT=20%(0%)/10(0)

10.03.11.0209.20 QTY:13 FL/-/5/-/-/R/-

PLT TYP. Wave

Scale =.5"/Ft.

WILLIAM H. KRICK
LICENSE
No. 70861
STATE OF FLORIDA
PROFESSIONAL ENGINEER
01/22/2013

ALPINE
ITW Building Components Group Inc.
Haines City, FL 33844
FL COA #0 278

WARNING READ AND FOLLOW ALL NOTES ON THIS SHEET!
IMPORTANT FURNISH THIS DESIGN TO ALL CONTRACTORS INCLUDING INSTALLERS.

Trusses require extreme care in fabricating, handling, shipping, installing and bracing. Refer to and follow the latest edition of BCSI (Building Component Safety Information, by TPI and WTCA) for safety practices prior to performing these functions. Installers shall provide temporary bracing per BCSI. Unless noted otherwise, top chord shall have properly attached structural sheathing and bottom chord shall have a properly attached rigid ceiling. Locations shown for permanent lateral restraint of webs shall have bracing installed per BCSI sections B3, B7 or B10, as applicable.

ITW Building Components Group Inc. (ITWBCG) shall not be responsible for any deviation from this design, any failure to build the truss in conformance with ANSI/TPI 1, or for handling, shipping, installation and bracing of trusses. Apply plates to each face of truss and position as shown above and on the Joint Details, unless noted otherwise. Refer to drawings 160A-Z for standard plate positions. A seal on this drawing or cover page listing this drawing, indicates acceptance of professional engineering responsibility solely for the design shown. The suitability and use of this design for any structure is the responsibility of the Building Designer per ANSI/TPI 1 Sec.2. For more information see: This job's general notes page; ITW-BCG: www.itwbcg.com; TPI: www.tpinst.org; WTCA: www.sbcindustry.com; ICC: www.iccsafe.org

TC LL	20.0 PSF	REF	R215-- 76721
TC DL	10.0 PSF	DATE	01/22/13
BC DL	10.0 PSF	DRW	HCUSR215 13022040
BC LL	0.0 PSF	HC-ENG	KD/AP
TOT.LD.	40.0 PSF	SEQN-	362586
DUR.FAC.	1.25	FROM	CDM
SPACING	24.0"	JREF-	1UT3215_Z01

(8025-/DERRINGTON PROPERTIES /Plumb Level Construction -- LAKE CITY, FL - J3)

Top chord 2x4 SP_#2_N__12A
Bot chord 2x4 SP_#2_N__12A

Lumber grades designated with "12A" use design values approved 1/5/2012 by ALSC.

Bottom chord checked for 10.00 psf non-concurrent live load.

The overall height of this truss excluding overhang is 2-10-3.

130 mph wind, 15.00 ft mean hgt, ASCE 7-10, CLOSED bldg, not located within 4.50 ft from roof edge, RISK CAT II, EXP C, wind TC DL=5.0 psf, wind BC DL=5.0 psf. GCpi(+/-)=0.18

Wind loads and reactions based on MWFRS with additional C&C member design.

Deflection meets L/240 live and L/180 total load. Creep increase factor for dead load is 1.50.

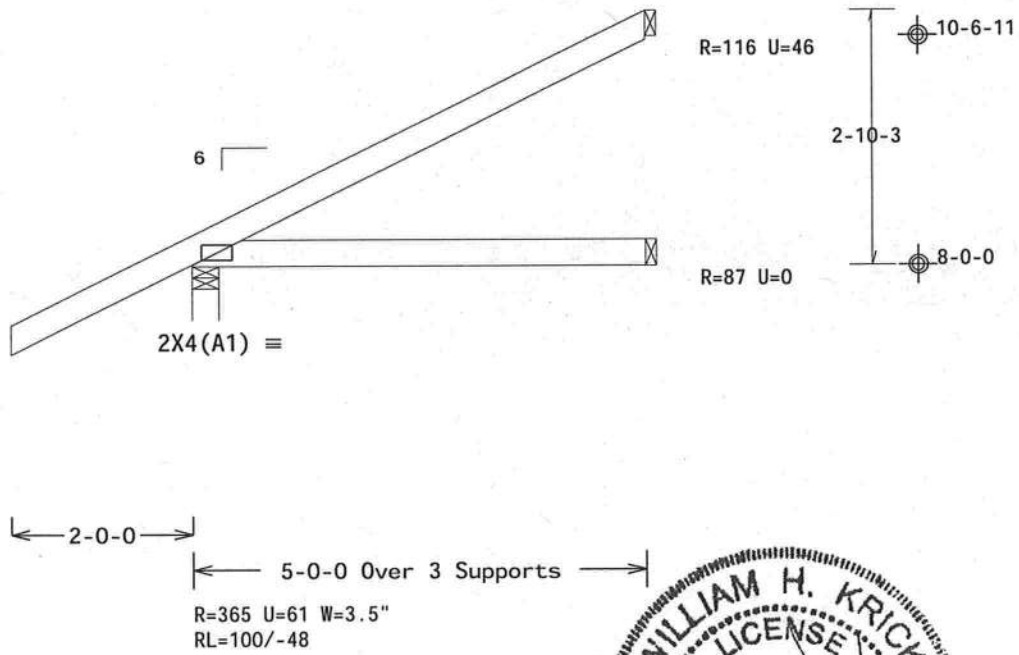

Design Crit: FBC2010Res/TPI-2007(STD)
FT/RT=20%(0%)/10(0) 10.03.11.0209.20 QTY:10 FL/-/5/-/-/R/- Scale =.5"/Ft.

PLT TYP. Wave

ALPINE
ITW Building Components Group Inc.
Haines City, FL 33844
FL COA #0 278

WARNING READ AND FOLLOW ALL NOTES ON THIS SHEET!
IMPORTANT FURNISH THIS DESIGN TO ALL CONTRACTORS INCLUDING INSTALLERS.

Trusses require extreme care in fabricating, handling, shipping, installing and bracing. Refer to and follow the latest edition of BCSI (Building Component Safety Information, by TPI and WTCA) regarding safety practices prior to performing these functions. Installers shall provide temporary bracing per BCSI. Unless noted otherwise, top chord shall have properly attached structural sheathing and bottom chord shall have a properly attached rigid ceiling. Locations shown for permanent lateral restraint of webs shall have bracing installed per BCSI sections B3, B7 or B10, as applicable.

ITW Building Components Group Inc. (ITWBCG) shall not be responsible for any deviation from this design, any failure to build the truss in conformance with ANSI/TPI 1, or for handling, shipping, installation and bracing of trusses. Apply plates to each face of truss and position as shown above and on the Joint Details, unless noted otherwise. Refer to drawings 160A-Z for standard plate positions. A seal on this drawing or cover page listing this drawing, indicates acceptance of professional engineering responsibility solely for the design shown. The suitability and use of this design for any structure is the responsibility of the Building Designer per ANSI/TPI 1 Sec.2. For more information see: This job's general notes page; ITW-BCG: www.itwbcg.com; TPI: www.tpinst.org; WTCA: www.sbcindustry.com; ICC: www.iccsafe.org

WILLIAM H. KRICK
LICENSE
No. 70861
STATE OF FLORIDA
PROFESSIONAL ENGINEER
01/22/2013

TC LL	20.0 PSF	REF	R215-- 76722
TC DL	10.0 PSF	DATE	01/22/13
BC DL	10.0 PSF	DRW	HCUSR215 13022029
BC LL	0.0 PSF	HC-ENG	KD/AP
TOT.LD.	40.0 PSF	SEQN-	362587
DUR.FAC.	1.25	FROM	CDM
SPACING	24.0"	JREF-	1UT3215_Z01

(8025-/DERRINGTON PROPERTIES /Plumb Level Construction -- LAKE CITY, FL - J4)

Top chord 2x4 SP_#2_N__12A
Bot chord 2x4 SP_#2_N__12A

Lumber grades designated with "12A" use design values approved 1/5/2012 by ALSC.

Bottom chord checked for 10.00 psf non-concurrent live load.

The overall height of this truss excluding overhang is 3-10-3.

MWFRS loads based on trusses located at least 7.50 ft. from roof edge.

130 mph wind, 15.00 ft mean hgt, ASCE 7-10, CLOSED bldg, Located anywhere in roof, RISK CAT II, EXP C, wind TC DL=5.0 psf, wind BC DL=5.0 psf. GCpi(+/-)=0.18

Wind loads and reactions based on MWFRS with additional C&C member design.

Deflection meets L/240 live and L/180 total load. Creep increase factor for dead load is 1.50.

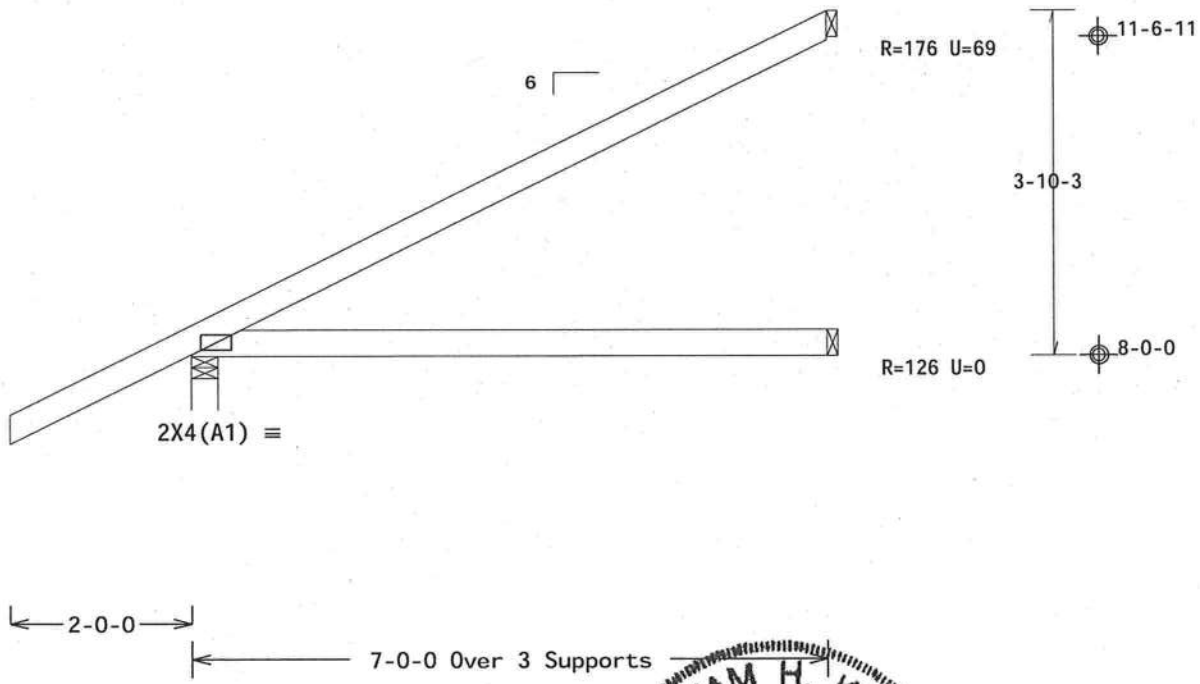

Design Crit: FBC2010Res/TPI-2007(STD)
FT/RT=20%(0%)/10(0) 10.03.11.0209.20 OT:18 FL/-/5/-/-/R/-

PLT TYP. Wave

Scale =.5"/Ft.

WILLIAM H. KRICK LICENSE No. 70861 STATE OF FLORIDA PROFESSIONAL ENGINEER
01/22/2013

ALPINE
ITW Building Components Group Inc.
Haines City, FL 33844
FL COA #0 278

WARNING READ AND FOLLOW ALL NOTES ON THIS SHEET!
IMPORTANT FURNISH THIS DESIGN TO ALL CONTRACTORS INCLUDING INSTALLERS.

Trusses require extreme care in fabricating, handling, shipping, installing and bracing. Refer to and follow the latest edition of BCSI (Building Component Safety Information, by TPI and WTCA) for safety practices prior to performing these functions. Installers shall provide temporary bracing per BCSI. Unless noted otherwise, top chord shall have properly attached structural sheathing and bottom chord shall have a properly attached rigid ceiling. Locations shown for permanent lateral restraint of webs shall have bracing installed per BCSI sections B3, B7 or B10, as applicable.

ITW Building Components Group Inc. (ITWBCG) shall not be responsible for any deviation from this design, any failure to build the truss in conformance with ANSI/TPI 1, or for handling, shipping, installation and bracing of trusses. Apply plates to each face of truss and position as shown above and on the Joint Details, unless noted otherwise. Refer to drawings 160A-Z for standard plate positions. A seal on this drawing or cover page listing this drawing, indicates acceptance of professional engineering responsibility solely for the design shown. The suitability and use of this design for any structure is the responsibility of the Building Designer per ANSI/TPI 1 Sec.2. For more information see: This job's general notes page; ITW-BCG: www.itwbcg.com; TPI: www.tpinst.org; WTCA: www.sbcindustry.com; ICC: www.iccsafe.org

TC LL	20.0 PSF	REF	R215-- 76723
TC DL	10.0 PSF	DATE	01/22/13
BC DL	10.0 PSF	DRW	HCUSR215 13022030
BC LL	0.0 PSF	HC-ENG	KD/AP
TOT.LD.	40.0 PSF	SEQN-	362585
DUR.FAC.	1.25	FROM	CDM
SPACING	24.0"	JREF-	1UT3215_Z01

(8025-/DERRINGTON PROPERTIES /Plumb Level Construction -- LAKE CITY, FL - J5)

Top chord 2x4 SP_#2_N__12A
Bot chord 2x4 SP_#2_N__12A

Lumber grades designated with "12A" use design values approved 1/5/2012 by ALSC.

130 mph wind, 15.00 ft mean hgt, ASCE 7-10, CLOSED bldg, Located anywhere in roof, RISK CAT II, EXP C, wind TC DL=5.0 psf, wind BC DL=5.0 psf. GCpi(+/-)=0.18

Bottom chord checked for 10.00 psf non-concurrent live load.

The overall height of this truss excluding overhang is 1-9-14.

Special loads
------(Lumber Dur.Fac.=1.25 / Plate Dur.Fac.=1.25)
TC- From 0 plf at -2.83 to 60 plf at 0.00
TC- From 2 plf at 0.00 to 2 plf at 4.24
BC- From 0 plf at -2.83 to 4 plf at 0.00
BC- From 2 plf at 0.00 to 2 plf at 4.24
TC- -73.40 lb Conc. Load at 1.48
BC- -8.12 lb Conc. Load at 1.48

Wind loads and reactions based on MWFRS.

Deflection meets L/240 live and L/180 total load. Creep increase factor for dead load is 1.50.

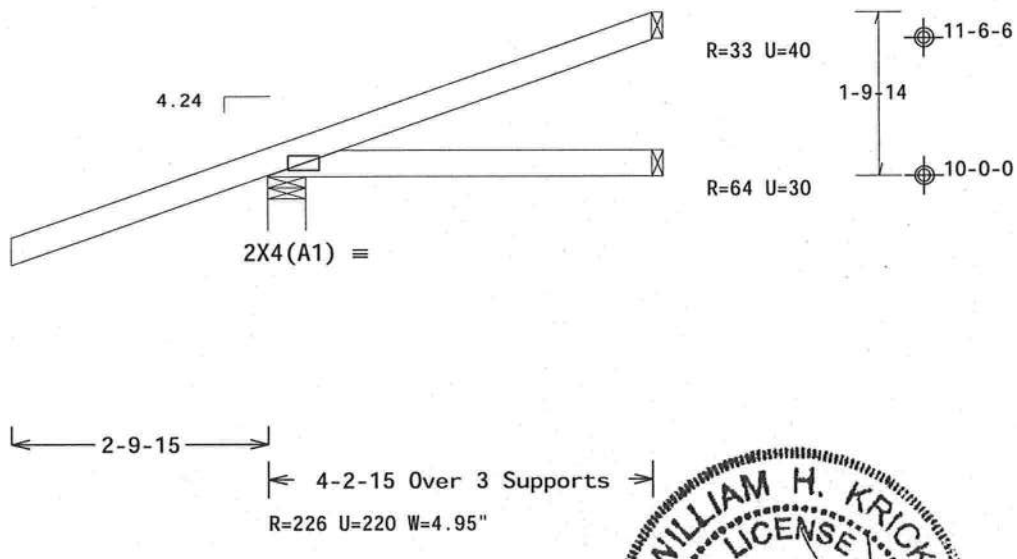

Design Crit: FBC2010Res/TPI-2007(STD)
FT/RT=20%(0%)/10(0)

PLT TYP. Wave

10.03.11.0209.20 QTY 2

FL/-/5/-/-/R/-

Scale =.5"/Ft.

WILLIAM H. KRICK
LICENSE
No. 70861
STATE OF FLORIDA
PROFESSIONAL ENGINEER
01/22/2013

ALPINE
ITW Building Components Group Inc.
Haines City, FL 33844
FL COA #0 278

WARNING READ AND FOLLOW ALL NOTES ON THIS SHEET!
IMPORTANT FURNISH THIS DESIGN TO ALL CONTRACTORS INCLUDING INSTALLERS.

Trusses require extreme care in fabricating, handling, shipping, installing and bracing. Refer to and follow the latest edition of BCSI (Building Component Safety Information, by TPI and WTCA) for safety practices prior to performing these functions. Installers shall provide temporary bracing per BCSI. Unless noted otherwise, top chord shall have properly attached structural sheathing and bottom chord shall have a properly attached rigid ceiling. Locations shown for permanent lateral restraint of webs shall have bracing installed per BCSI sections B3, B7 or B10, as applicable.

ITW Building Components Group Inc. (ITWBCG) shall not be responsible for any deviation from this design, any failure to build the truss in conformance with ANSI/TPI 1, or for handling, shipping, installation and bracing of trusses. Apply plates to each face of truss and position as shown above and on the Joint Details, unless noted otherwise. Refer to drawings 160A-Z for standard plate positions. A seal on this drawing or cover page listing this drawing, indicates acceptance of professional engineering responsibility solely for the design shown. The suitability and use of this design for any structure is the responsibility of the Building Designer per ANSI/TPI 1 Sec.2. For more information see: This job's general notes page; ITW-BCG: www.itwbcg.com; TPI: www.tpinst.org; WTCA: www.sbcindustry.com; ICC: www.iccsafe.org

TC LL	20.0 PSF	REF	R215-- 76724
TC DL	10.0 PSF	DATE	01/22/13
BC DL	10.0 PSF	DRW	HCUSR215 13022031
BC LL	0.0 PSF	HC-ENG	KD/AP
TOT.LD.	40.0 PSF	SEQN-	362652
DUR.FAC.	1.25	FROM	CDM
SPACING	24.0"	JREF-	1UT3215_Z01

(8025-/DERRINGTON PROPERTIES /Plumb Level Construction -- LAKE CITY, FL - J6)

Top chord 2x4 SP_#2_N__12A
Bot chord 2x4 SP_#2_N__12A

Lumber grades designated with "12A" use design values approved 1/5/2012 by ALSC.

130 mph wind, 15.00 ft mean hgt, ASCE 7-10, CLOSED bldg, Located anywhere in roof, RISK CAT II, EXP C, wind TC DL=5.0 psf, wind BC DL=5.0 psf. GCpi(+/-)=0.18

Bottom chord checked for 10.00 psf non-concurrent live load.

The overall height of this truss excluding overhang is 1-3-2.

Special loads
------(Lumber Dur.Fac.=1.25 / Plate Dur.Fac.=1.25)
TC- From 0 plf at -2.83 to 60 plf at 0.00
TC- From 2 plf at 0.00 to 2 plf at 2.65
BC- From 0 plf at -2.83 to 4 plf at 0.00
BC- From 2 plf at 0.00 to 2 plf at 2.65
TC- -73.40 lb Conc. Load at 1.48
BC- -8.12 lb Conc. Load at 1.48

Wind loads and reactions based on MWFRS.

Deflection meets L/240 live and L/180 total load. Creep increase factor for dead load is 1.50.

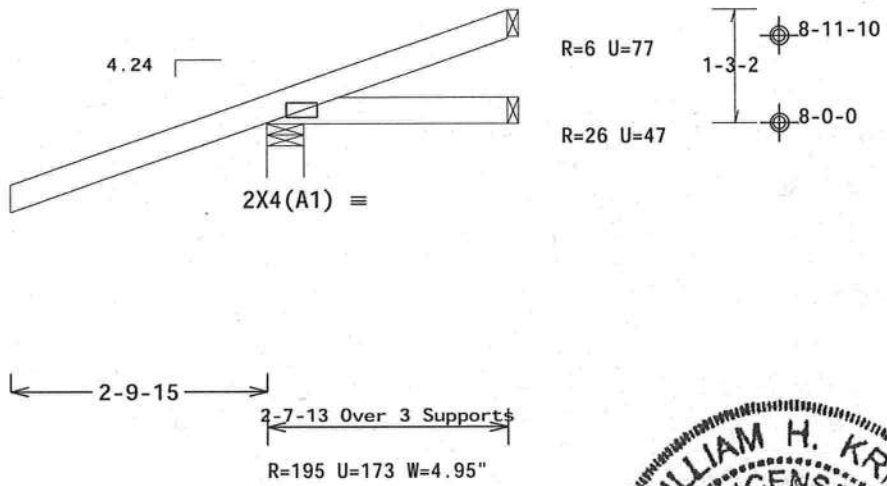

Design Crit: FBC2010Res/TPI-2007(STD)
FT/RT=20%(0%)/10(0)

10.03.11.0209.20 QTY:2 FL/-/5/-/-/R/-

PLT TYP. Wave

Scale =.5"/Ft.

WILLIAM H. KRICK
LICENSE
No. 70861
STATE OF FLORIDA
PROFESSIONAL ENGINEER
01/22/2013

ALPINE
ITW Building Components Group Inc.
Haines City, FL 33844
FL COA #0 278

WARNING READ AND FOLLOW ALL NOTES ON THIS SHEET!
IMPORTANT FURNISH THIS DESIGN TO ALL CONTRACTORS INCLUDING INSTALLERS.

Trusses require extreme care in fabricating, handling, shipping, installing and bracing. Refer to and follow the latest edition of BCSI (Building Component Safety Information, by TPI and WTCA) for safety practices prior to performing these functions. Installers shall provide temporary bracing per BCSI. Unless noted otherwise, top chord shall have properly attached structural sheathing and bottom chord shall have a properly attached rigid ceiling. Locations shown for permanent lateral restraint of webs shall have bracing installed per BCSI sections B3, B7 or B10, as applicable.

ITW Building Components Group Inc. (ITWBCG) shall not be responsible for any deviation from this design, any failure to build the truss in conformance with ANSI/TPI 1, or for handling, shipping, installation and bracing of trusses. Apply plates to each face of truss and position as shown above and on the Joint Details, unless noted otherwise. Refer to drawings 160A-Z for standard plate positions. A seal on this drawing or cover page listing this drawing, indicates acceptance of professional engineering responsibility solely for the design shown. The suitability and use of this design for any structure is the responsibility of the Building Designer per ANSI/TPI 1 Sec.2. For more information see: This job's general notes page; ITW-BCG: www.itwbcg.com; TPI: www.tpinst.org; WTCA: www.sbcindustry.com; ICC: www.iccsafe.org

TC LL	20.0 PSF	REF	R215-- 76725
TC DL	10.0 PSF	DATE	01/22/13
BC DL	10.0 PSF	DRW	HCUSR215 13022032
BC LL	0.0 PSF	HC-ENG	KD/AP
TOT.LD.	40.0 PSF	SEQN-	362837
DUR.FAC.	1.25	FROM	CDM
SPACING	24.0"	JREF-	1UT3215_Z01

(8025-/DERRINGTON PROPERTIES /Plumb Level Construction -- LAKE CITY, FL - J7)

Top chord 2x4 SP_#2_N__12A
Bot chord 2x4 SP_#2_N__12A

Lumber grades designated with "12A" use design values approved 1/5/2012 by ALSC.

Bottom chord checked for 10.00 psf non-concurrent live load.

The overall height of this truss excluding overhang is 1-3-7.

MWFRS loads based on trusses located at least 15.00 ft. from roof edge.

130 mph wind, 15.00 ft mean hgt, ASCE 7-10, CLOSED bldg, Located anywhere in roof, RISK CAT II, EXP C, wind TC DL=5.0 psf, wind BC DL=5.0 psf. GCpi(+/-)=0.18

Wind loads and reactions based on MWFRS with additional C&C member design.

Deflection meets L/240 live and L/180 total load. Creep increase factor for dead load is 1.50.

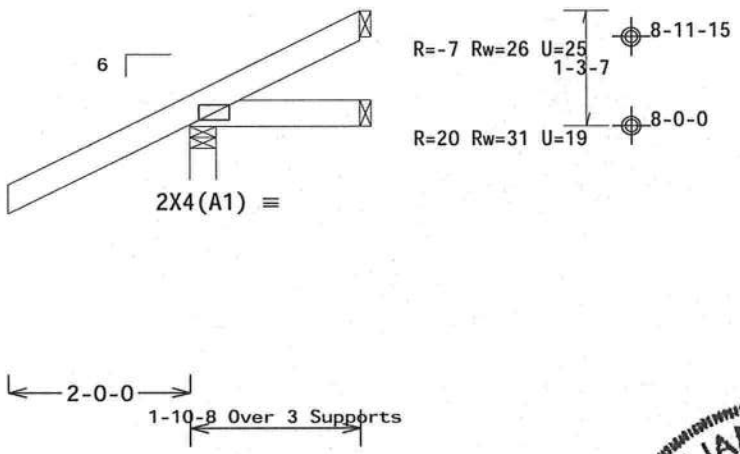

Design Crit: FBC2010Res/TPI-2007(STD)
FT/RT=20%(0%)/10(0)

10.03.11.0209.20 QTY:9

FL/-/5/-/-/R/-

Scale =.5"/Ft.

PLT TYP. Wave

WILLIAM H. KRICK
LICENSE
No. 70861
STATE OF FLORIDA
PROFESSIONAL ENGINEER
01/22/2013

ALPINE
ITW Building Components Group Inc.
Haines City, FL 33844
FL COA #0 278

WARNING READ AND FOLLOW ALL NOTES ON THIS SHEET!
IMPORTANT FURNISH THIS DESIGN TO ALL CONTRACTORS INCLUDING INSTALLERS.

Trusses require extreme care in fabricating, handling, shipping, installing and bracing. Refer to and follow the latest edition of BCSI (Building Component Safety Information, by TPI and WTCA) for general practices prior to performing these functions. Installers shall provide temporary bracing per BCSI. Unless noted otherwise, top chord shall have properly attached structural sheathing and bottom chord shall have a properly attached rigid ceiling. Locations shown for permanent lateral restraint of webs shall have bracing installed per BCSI sections B3, B7 or B10, as applicable.

ITW Building Components Group Inc. (ITWBCG) shall not be responsible for any deviation from this design, any failure to build the truss in conformance with ANSI/TPI 1, or for handling, shipping, installation and bracing of trusses. Apply plates to each face of truss and position as shown above and on the Joint Details, unless noted otherwise. Refer to drawings 160A-Z for standard plate positions. A seal on this drawing or cover page listing this drawing, indicates acceptance of professional engineering responsibility solely for the design shown. The suitability and use of this design for any structure is the responsibility of the Building Designer per ANSI/TPI 1 Sec.2. For more information see: This job's general notes page; ITW-BCG: www.itwbcg.com; TPI: www.tpinst.org; WTCA: www.sbcindustry.com; ICC: www.iccsafe.org

TC LL	20.0 PSF	REF	R215-- 76726
TC DL	10.0 PSF	DATE	01/22/13
BC DL	10.0 PSF	DRW	HCUSR215 13022025
BC LL	0.0 PSF	HC-ENG	KD/AP
TOT.LD.	40.0 PSF	SEQN-	362603
DUR.FAC.	1.25	FROM	CDM
SPACING	24.0"	JREF-	1UT3215_Z01

(8025-/DERRINGTON PROPERTIES /Plumb Level Construction -- LAKE CITY, FL - J8)

Top chord 2x4 SP_#2_N__12A
Bot chord 2x4 SP_#2_N__12A
Webs 2x4 SP_SS_12A :W2 2x4 SP_#2_N__12A:

Lumber grades designated with "12A" use design values approved 1/5/2012 by ALSC.

130 mph wind, 15.00 ft mean hgt, ASCE 7-10, CLOSED bldg, not located within 9.00 ft from roof edge, RISK CAT II, EXP C, wind TC DL=5.0 psf, wind BC DL=5.0 psf. GCpi(+/-)=0.18

Wind loads and reactions based on MWFRS.

Bottom chord checked for 10.00 psf non-concurrent live load.

The overall height of this truss excluding overhang is 3-9-14.

Special loads
------(Lumber Dur.Fac.=1.25 / Plate Dur.Fac.=1.25)
TC- From 0 plf at -2.83 to 60 plf at 0.00
TC- From 2 plf at 0.00 to 2 plf at 9.90
BC- From 0 plf at -2.83 to 4 plf at 0.00
BC- From 2 plf at 0.00 to 2 plf at 7.57
BC- From 2 plf at 7.57 to 2 plf at 9.90
TC- -73.40 lb Conc. Load at 1.48
TC- 95.69 lb Conc. Load at 4.31
TC- 232.01 lb Conc. Load at 7.13
BC- -8.12 lb Conc. Load at 1.48
BC- 90.98 lb Conc. Load at 4.31
BC- 173.27 lb Conc. Load at 7.13

Deflection meets L/240 live and L/180 total load. Creep increase factor for dead load is 1.50.

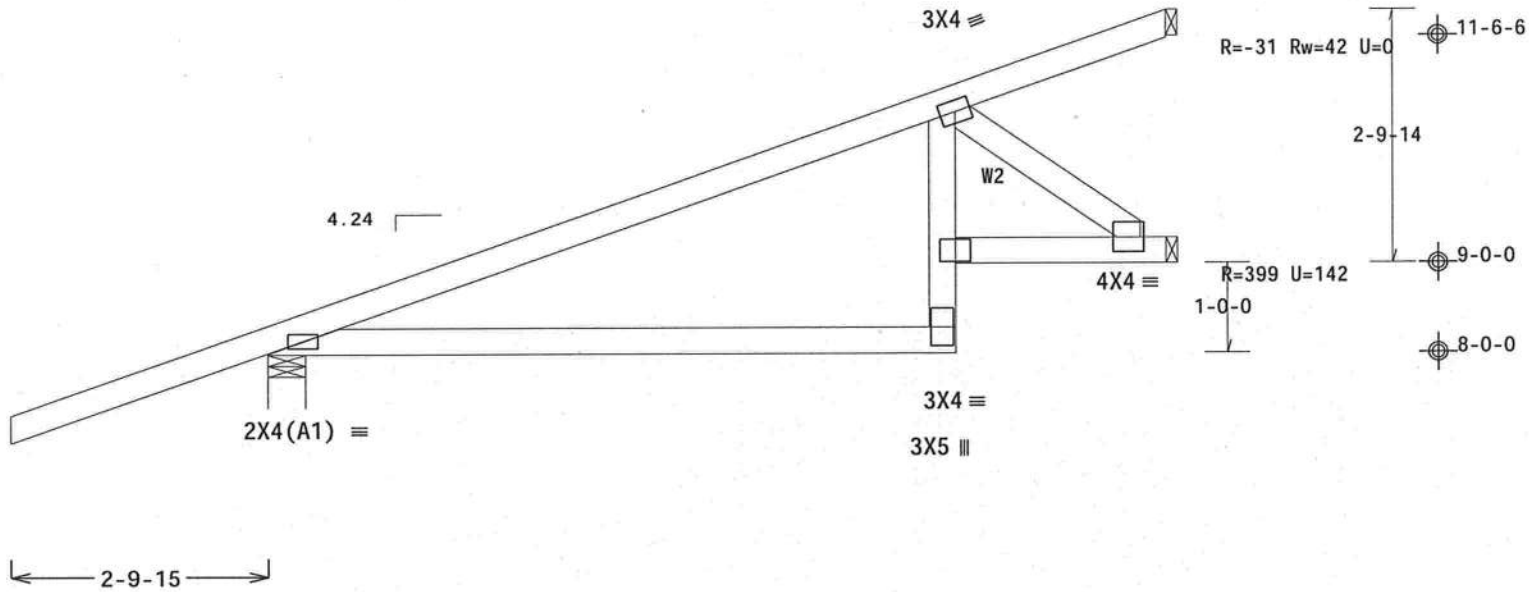

Design Crit: FBC2010Res/TPI-2007(STD)
FT/RT=20%(0%)/10(0)

PLT TYP. Wave

10.03.11.0209.20 QTY: 1

FL/-/5/-/-/R/-

Scale =.5"/Ft.

WILLIAM H. KRICK
LICENSE
No. 70861
STATE OF FLORIDA
PROFESSIONAL ENGINEER
01/22/2013

ALPINE
ITW Building Components Group Inc.
Haines City, FL 33844
FL COA #0 278

WARNING READ AND FOLLOW ALL NOTES ON THIS SHEET!
IMPORTANT FURNISH THIS DESIGN TO ALL CONTRACTORS INCLUDING INSTALLERS.

Trusses require extreme care in fabricating, handling, shipping, installing and bracing. Refer to and follow the latest edition of BCSI (Building Component Safety Information, by TPI and WTCA) for safety practices prior to performing these functions. Installers shall provide temporary bracing per BCSI. Unless noted otherwise, top chord shall have properly attached structural sheathing and bottom chord shall have a properly attached rigid ceiling. Locations shown for permanent lateral restraint of webs shall have bracing installed per BCSI sections B3, B7 or B10, as applicable.

ITW Building Components Group Inc. (ITWBCG) shall not be responsible for any deviation from this drawing, any failure to build the truss in conformance with ANSI/TPI 1, or for handling, shipping, installation and bracing of trusses. Apply plates to each face of truss and position as shown above and on the Joint Details, unless noted otherwise. Refer to drawings 160A-Z for standard plate positions. A seal on this drawing or cover page listing this drawing, indicates acceptance of professional engineering responsibility solely for the design shown. The suitability and use of this design for any structure is the responsibility of the Building Designer per ANSI/TPI 1 Sec.2. For more information see: This job's general notes page; ITW-BCG: www.itwbcg.com; TPI: www.tpinst.org; WTCA: www.sbcindustry.com; ICC: www.iccsafe.org

TC LL	20.0 PSF	REF	R215-- 76727
TC DL	10.0 PSF	DATE	01/22/13
BC DL	10.0 PSF	DRW	HCUSR215 13022026
BC LL	0.0 PSF	HC-ENG	KD/AP
TOT.LD.	40.0 PSF	SEQN-	362655
DUR.FAC.	1.25	FROM	CDM
SPACING	24.0"	JREF-	1UT3215_Z01

(8025-/DERRINGTON PROPERTIES /Plumb Level Construction -- LAKE CITY, FL - J9)

Top chord 2x4 SP_#2_N__12A
Bot chord 2x4 SP_#2_N__12A
Webs 2x4 SP_#2_N__12A

Lumber grades designated with "12A" use design values approved 1/5/2012 by ALSC.

Calculated horizontal deflection is 0.11" due to live load and 0.15" due to dead load.

The overall height of this truss excluding overhang is 3-10-3.

130 mph wind, 15.00 ft mean hgt, ASCE 7-10, CLOSED bldg, not located within 4.50 ft from roof edge, RISK CAT II, EXP C, wind TC DL=5.0 psf, wind BC DL=5.0 psf. GCpi(+/-)=0.18

Wind loads and reactions based on MWFRS with additional C&C member design.

Bottom chord checked for 10.00 psf non-concurrent live load.

Deflection meets L/240 live and L/180 total load. Creep increase factor for dead load is 1.50.

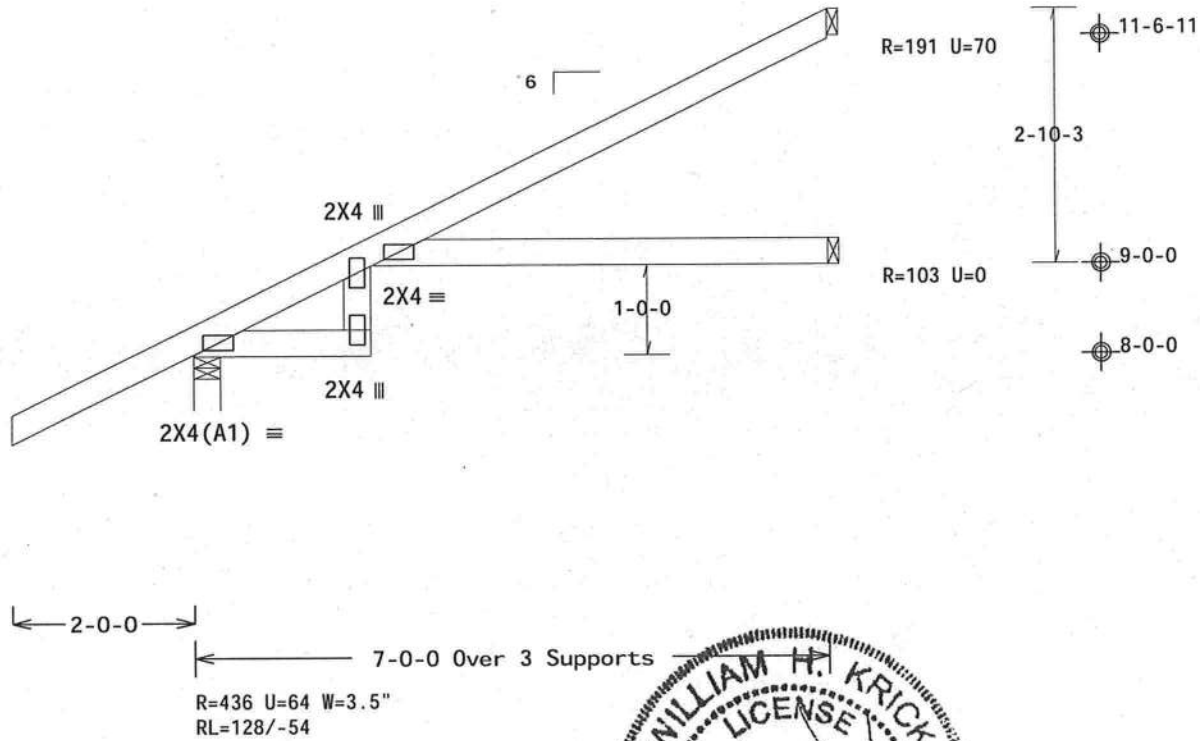

Design Crit: FBC2010Res/TPI-2007(STD)
FT/RT=20%(0%)/10(0)

10.03.11.0209.20 QTY:5

FL/-/5/-/-/R/-

Scale =.5"/Ft.

PLT TYP. Wave

WILLIAM H. KRICK LICENSE No. 70861 STATE OF FLORIDA PROFESSIONAL ENGINEER
01/22/2013

ALPINE
ITW Building Components Group Inc.
Haines City, FL 33844
FL COA #0 278

WARNING READ AND FOLLOW ALL NOTES ON THIS SHEET!
IMPORTANT FURNISH THIS DESIGN TO ALL CONTRACTORS INCLUDING INSTALLERS.

Trusses require extreme care in fabricating, handling, shipping, installing and bracing. Refer to and follow the latest edition of BCSI (Building Component Safety Information, by TPI and WTCA) for general practices prior to performing these functions. Installers shall provide temporary bracing per BCSI. Unless noted otherwise, top chord shall have properly attached structural sheathing and bottom chord shall have a properly attached rigid ceiling. Locations shown for permanent lateral restraint of webs shall have bracing installed per BCSI sections B3, B7 or B10, as applicable.

ITW Building Components Group Inc. (ITWBCG) shall not be responsible for any deviation from this design, any failure to build the truss in conformance with ANSI/TPI 1, or for handling, shipping, installation and bracing of trusses. Apply plates to each face of truss and position as shown above and on the Joint Details, unless noted otherwise. Refer to drawings 160A-Z for standard plate positions. A seal on this drawing or cover page listing this drawing, indicates acceptance of professional engineering responsibility solely for the design shown. The suitability and use of this design for any structure is the responsibility of the Building Designer per ANSI/TPI 1 Sec.2. For more information see: This job's general notes page; ITW-BCG: www.itwbcg.com; TPI: www.tpinst.org; WTCA: www.sbcindustry.com; ICC: www.iccsafe.org

TC LL	20.0 PSF	REF	R215-- 76728
TC DL	10.0 PSF	DATE	01/22/13
BC DL	10.0 PSF	DRW	HCUSR215 13022027
BC LL	0.0 PSF	HC-ENG	KD/AP
TOT.LD.	40.0 PSF	SEQN-	362664
DUR.FAC.	1.25	FROM	CDM
SPACING	24.0"	JREF-	1UT3215_Z01

(8025-/DERRINGTON PROPERTIES /Plumb Level Construction -- LAKE CITY, FL - J10)

Top chord 2x4 SP_#2_N__12A
Bot chord 2x4 SP_#2_N__12A

Lumber grades designated with "12A" use design values approved 1/5/2012 by ALSC.

Bottom chord checked for 10.00 psf non-concurrent live load.

The overall height of this truss excluding overhang is 3-10-3.

MWFRS loads based on trusses located at least 15.00 ft. from roof edge.

130 mph wind, 15.00 ft mean hgt, ASCE 7-10, CLOSED bldg, Located anywhere in roof, RISK CAT II, EXP C, wind TC DL=5.0 psf, wind BC DL=5.0 psf. GCpi(+/-)=0.18

Wind loads and reactions based on MWFRS with additional C&C member design.

Deflection meets L/240 live and L/180 total load. Creep increase factor for dead load is 1.50.

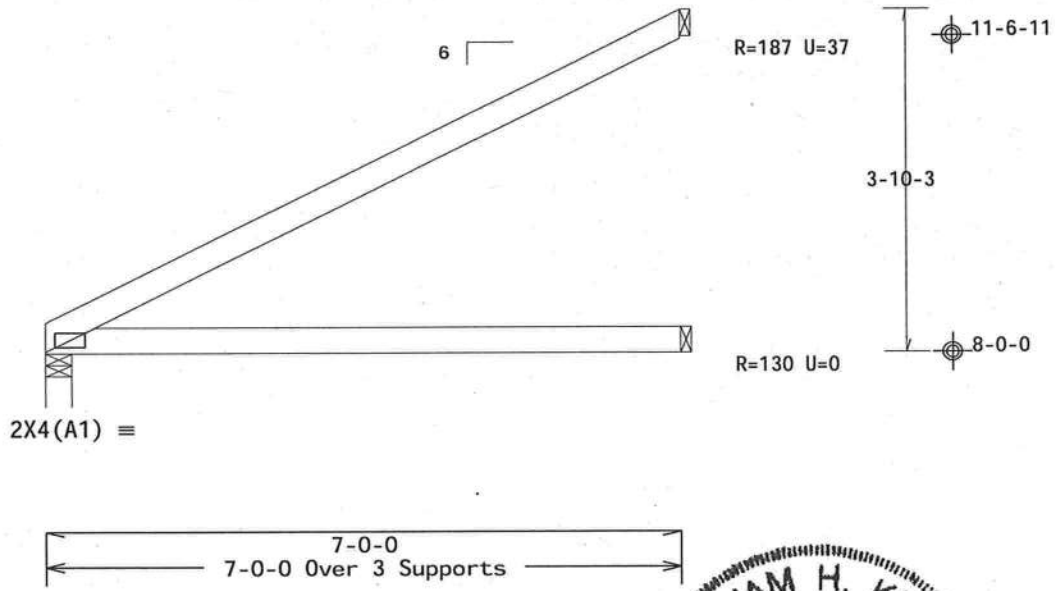

Design Crit: FBC2010Res/TPI-2007(STD)
FT/RT=20%(0%)/10(0)

10.03.11.0209.20 QTY:1 FL/-/5/-/-/R/-

Scale =.5"/Ft.

PLT TYP. Wave

ALPINE
ITW Building Components Group Inc.
Haines City, FL 33844
FL COA #0 278

WARNING READ AND FOLLOW ALL NOTES ON THIS SHEET!
IMPORTANT FURNISH THIS DESIGN TO ALL CONTRACTORS INCLUDING INSTALLERS.

Trusses require extreme care in fabricating, handling, shipping, installing and bracing. Refer to and follow the latest edition of BCSI (Building Component Safety Information, by TPI and WTCA) for safety practices prior to performing these functions. Installers shall provide temporary bracing per BCSI. Unless noted otherwise, top chord shall have properly attached structural sheathing and bottom chord shall have a properly attached rigid ceiling. Locations shown for permanent lateral restraint of webs shall have bracing installed per BCSI sections B3, B7 or B10, as applicable.

ITW Building Components Group Inc. (ITWBCG) shall not be responsible for any deviation from this drawing, any failure to build the truss in conformance with ANSI/TPI 1, or for handling, shipping, installation and bracing of trusses. Apply plates to each face of truss and position as shown above and on the Joint Details, unless noted otherwise. Refer to drawings 160A-Z for standard plate positions. A seal on this drawing or cover page listing this drawing, indicates acceptance of professional engineering responsibility solely for the design shown. The suitability and use of this design for any structure is the responsibility of the Building Designer per ANSI/TPI 1 Sec.2. For more information see: This job's general notes page; ITW-BCG: www.itwbcg.com; TPI: www.tpinst.org; WTCA: www.sbcindustry.com; ICC: www.iccsafe.org

WILLIAM H. KRICK
LICENSE
No. 70861
STATE OF FLORIDA
PROFESSIONAL ENGINEER
01/22/2013

TC LL	20.0 PSF	REF	R215-- 76729
TC DL	10.0 PSF	DATE	01/22/13
BC DL	10.0 PSF	DRW	HCUSR215 13022028
BC LL	0.0 PSF	HC-ENG	KD/AP
TOT.LD.	40.0 PSF	SEQN-	362658
DUR.FAC.	1.25	FROM	CDM
SPACING	24.0"	JREF-	1UT3215_Z01

(8025-/DERRINGTON PROPERTIES /Plumb Level Construction -- LAKE CITY, FL - J11)

Top chord 2x4 SP_#2_N__12A
Bot chord 2x4 SP_#2_N__12A
Webs 2x4 SP_#2_N__12A

Lumber grades designated with "12A" use design values approved 1/5/2012 by ALSC.

Special loads
------(Lumber Dur.Fac.=1.25 / Plate Dur.Fac.=1.25)
TC- From 30 plf at 0.00 to 30 plf at 7.00
BC- From 10 plf at 0.00 to 10 plf at 7.00
BC- 743.33 lb Conc. Load at 1.94, 3.94, 5.94

Wind loads and reactions based on MWFRS.

H = recommended connection based on manufacturer tested capacities and calculations. Conditions may exist that require different connections than indicated. Refer to manufacturer publication for additional information.

The overall height of this truss excluding overhang is 3-10-3.

2 COMPLETE TRUSSES REQUIRED

Nail Schedule:0.131"x3", min. nails
Top Chord: 1 Row @12.00" o.c.
Bot Chord: 1 Row @ 5.00" o.c.
Webs : 1 Row @ 4" o.c.
Use equal spacing between rows and stagger nails in each row to avoid splitting.

*** WARNING! Reaction exceeds allowable ***

130 mph wind, 15.00 ft mean hgt, ASCE 7-10, CLOSED bldg, Located anywhere in roof, RISK CAT II, EXP C, wind TC DL=5.0 psf, wind BC DL=5.0 psf. GCpi(+/-)=0.18

Right end vertical not exposed to wind pressure.

Deflection meets L/240 live and L/180 total load. Creep increase factor for dead load is 1.50.

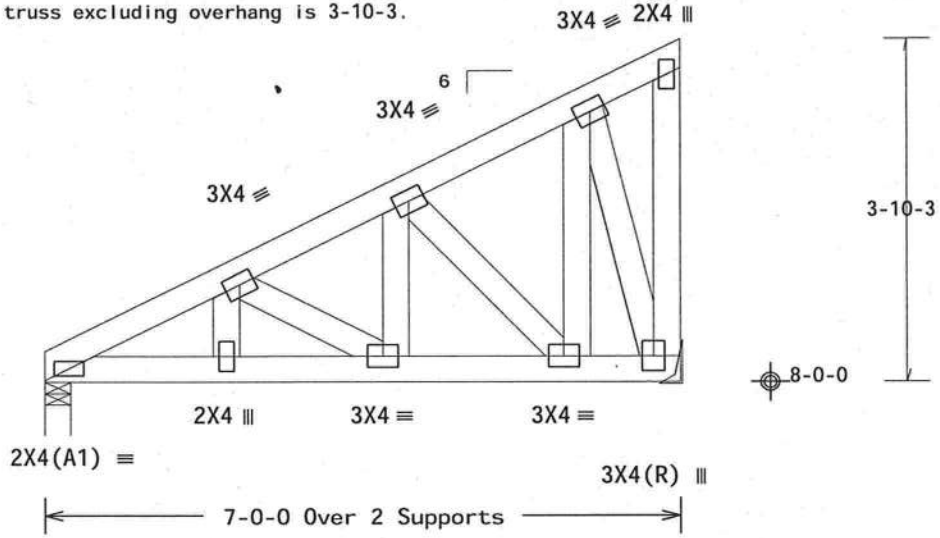

R=1371 U=257 H=ITW (100) HDTP26-2
Supported Member Face: (6) 0.128"x3" nails
Supporting Member Face: (14) 0.128"x3" nails
Supporting Member (2) 2x6 SP_#2_N__12A

R=1139 U=214 W=3.5"

Design Crit: FBC2010Res/TPI-2007(STD)
PLT TYP. Wave FT/RT=20%(0%)/10(0) 10.03.Pr.0209 20 QTY:1 FL/-/5/-/-/R/- Scale =.5"/Ft.

WILLIAM H. ... LICENSE ... No. 70861 STATE OF FLORIDA PROFESSIONAL ENGINEER 01/22/2013

ALPINE
ITW Building Components Group Inc.
Haines City, FL 33844
FL COA #0 278

WARNING READ AND FOLLOW ALL NOTES ON THIS SHEET!
IMPORTANT FURNISH THIS DESIGN TO ALL CONTRACTORS INCLUDING INSTALLERS.

Trusses require extreme care in fabricating, handling, shipping, installing and bracing. Refer to and follow the latest edition of BCSI (Building Component Safety Information, by TPI and WTCA) for safety practices prior to performing these functions. Installers shall provide temporary bracing per BCSI. Unless noted otherwise, top chord shall have properly attached structural sheathing and bottom chord shall have a properly attached rigid ceiling. Locations shown for permanent lateral restraint of webs shall have bracing installed per BCSI sections B3, B7 or B10, as applicable.

ITW Building Components Group Inc. (ITWBCG) shall not be responsible for any deviation from this design, any failure to build the truss in conformance with ANSI/TPI 1, or for handling, shipping, installation and bracing of trusses. Apply plates to each face of truss and position as shown above and on the Joint Details, unless noted otherwise. Refer to drawings 160A-Z for standard plate positions. A seal on this drawing or cover page listing this drawing, indicates acceptance of professional engineering responsibility solely for the design shown. The suitability and use of this design for any structure is the responsibility of the Building Designer per ANSI/TPI 1 Sec.2. For more information see: This job's general notes page; ITW-BCG: www.itwbcg.com; TPI: www.tpinst.org; WTCA: www.sbcindustry.com; ICC: www.iccsafe.org

TC LL	20.0 PSF	REF	R215-- 76730
TC DL	10.0 PSF	DATE	01/22/13
BC DL	10.0 PSF	DRW	HCUSR215 13022046
BC LL	0.0 PSF	HC-ENG	KD/AP
TOT.LD.	40.0 PSF	SEQN-	362633
DUR.FAC.	1.25	FROM	CDM
SPACING	24.0"	JREF-	1UT3215_Z01

(8025-/DERRINGTON PROPERTIES /Plumb Level Construction -- LAKE CITY, FL - J12)

Top chord 2x4 SP_#2_N__12A
Bot chord 2x4 SP_#2_N__12A

Lumber grades designated with "12A" use design values approved 1/5/2012 by ALSC.

130 mph wind, 15.00 ft mean hgt, ASCE 7-10, CLOSED bldg, Located anywhere in roof, RISK CAT II, EXP C, wind TC DL=5.0 psf, wind BC DL=5.0 psf. GCpi(+/-)=0.18

Bottom chord checked for 10.00 psf non-concurrent live load.

The overall height of this truss excluding overhang is 1-3-14.

Special loads
------(Lumber Dur.Fac.=1.25 / Plate Dur.Fac.=1.25)
TC- From 0 plf at -2.83 to 60 plf at 0.00
TC- From 2 plf at 0.00 to 2 plf at 2.83
BC- From 0 plf at -2.83 to 4 plf at 0.00
BC- From 2 plf at 0.00 to 2 plf at 2.83
TC- -73.40 lb Conc. Load at 1.48
BC- -8.12 lb Conc. Load at 1.48

Wind loads and reactions based on MWFRS.

Deflection meets L/240 live and L/180 total load. Creep increase factor for dead load is 1.50.

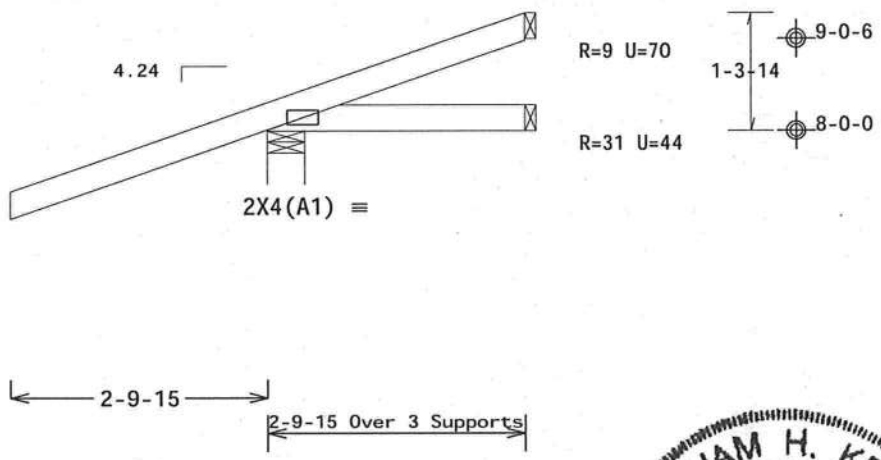

Design Crit: FBC2010Res/TPI-2007(STD)
FT/RT=20%(0%)/10(0) 10.03.11.0209.20 QTY: 2 FL/-/5/-/-/R/-

PLT TYP. Wave

Scale =.5"/Ft.

WILLIAM H. KRICK LICENSE No. 70861 STATE OF FLORIDA PROFESSIONAL ENGINEER
01/22/2013

ALPINE
ITW Building Components Group Inc.
Haines City, FL 33844
FL COA #0 278

WARNING READ AND FOLLOW ALL NOTES ON THIS SHEET!
IMPORTANT FURNISH THIS DESIGN TO ALL CONTRACTORS INCLUDING INSTALLERS.

Trusses require extreme care in fabricating, handling, shipping, installing and bracing. Refer to and follow the latest edition of BCSI (Building Component Safety Information, by TPI and WTCA) for safety practices prior to performing these functions. Installers shall provide temporary bracing per BCSI. Unless noted otherwise, top chord shall have properly attached structural sheathing and bottom chord shall have a properly attached rigid ceiling. Locations shown for permanent lateral restraint of webs shall have bracing installed per BCSI sections B3, B7 or B10, as applicable.

ITW Building Components Group Inc. (ITWBCG) shall not be responsible for any deviation from this design, any failure to build the truss in conformance with ANSI/TPI 1, or for handling, shipping, installation and bracing of trusses. Apply plates to each face of truss and position as shown above and on the Joint Details, unless noted otherwise. Refer to drawings 160A-Z for standard plate positions. A seal on this drawing or cover page listing this drawing, indicates acceptance of professional engineering responsibility solely for the design shown. The suitability and use of this design for any structure is the responsibility of the Building Designer per ANSI/TPI 1 Sec.2. For more information see: This job's general notes page; ITW-BCG: www.itwbcg.com; TPI: www.tpinst.org; WTCA: www.sbcindustry.com; ICC: www.iccsafe.org

TC LL	20.0 PSF	REF	R215-- 76731
TC DL	10.0 PSF	DATE	01/22/13
BC DL	10.0 PSF	DRW	HCUSR215 13022033
BC LL	0.0 PSF	HC-ENG	KD/AP
TOT.LD.	40.0 PSF	SEQN-	362833
DUR.FAC.	1.25	FROM	CDM
SPACING	24.0"	JREF-	1UT3215_Z01

THIS DWG PREPARED FROM COMPUTER INPUT (LOADS & DIMENSIONS) SUBMITTED BY TRUSS MFR.

Top chord 2x4 SP_#2_N__12A
Bot chord 2x4 SP_#2_N__12A

Lumber grades designated with "12A" use design values approved 1/5/2012 by ALSC.

Bottom chord checked for 10.00 psf non-concurrent live load.

The overall height of this truss excluding overhang is 1-4-3.

130 mph wind, 15.00 ft mean hgt, ASCE 7-10, CLOSED bldg, Located anywhere in roof, RISK CAT II, EXP C, wind TC DL=5.0 psf, wind BC DL=5.0 psf. GCpi(+/-)=0.18

Wind loads and reactions based on MWFRS with additional C&C member design.

Deflection meets L/240 live and L/180 total load. Creep increase factor for dead load is 1.50.

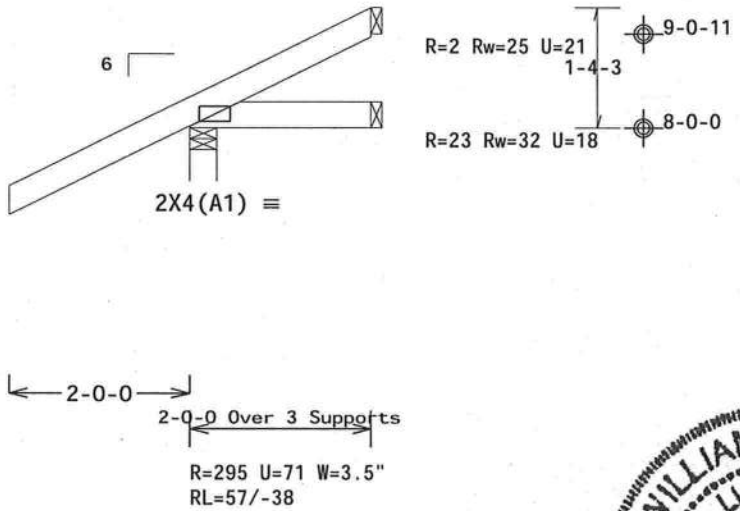

Design Crit: FBC2010Res/TPI-2007(STD)
FT/RT=20%(0%)/10(0) 10.03.11.0209.20 QTY:9 FL/-/5/-/-/R/-

PLT TYP. Wave

Scale =.5"/Ft.

ALPINE
ITW Building Components Group Inc.
Haines City, FL 33844
FL COA #0 278

WARNING READ AND FOLLOW ALL NOTES ON THIS SHEET!
IMPORTANT FURNISH THIS DESIGN TO ALL CONTRACTORS INCLUDING INSTALLERS.

Trusses require extreme care in fabricating, handling, shipping, installing and bracing. Refer to and follow the latest edition of BCSI (Building Component Safety Information, by TPI and WTCA) for safety practices prior to performing those functions. Installers shall provide temporary bracing per BCSI. Unless noted otherwise, top chord shall have properly attached structural sheathing and bottom chord shall have a properly attached rigid ceiling. Locations shown for permanent lateral restraint of webs shall have bracing installed per BCSI sections B3, B7 or B10, as applicable.

ITW Building Components Group Inc. (ITWBCG) shall not be responsible for any deviation from this design, any failure to build the truss in conformance with ANSI/TPI 1, or for handling, shipping, installation and bracing of trusses. Apply plates to each face of truss and position as shown above and on the Joint Details, unless noted otherwise. Refer to drawings 160A-Z for standard plate positions. A seal on this drawing or cover page listing this drawing, indicates acceptance of professional engineering responsibility solely for the design shown. The suitability and use of this design for any structure is the responsibility of the Building Designer per ANSI/TPI 1 Sec.2. For more information see: This job's general notes page; ITW-BCG: www.itwbcg.com; TPI: www.tpinst.org; WTCA: www.sbcindustry.com; ICC: www.iccsafe.org

WILLIAM H. KRICK
LICENSE
No. 70861
STATE OF FLORIDA
PROFESSIONAL ENGINEER
01/22/2013

TC LL	20.0 PSF	REF	R215-- 76732
TC DL	10.0 PSF	DATE	01/22/13
BC DL	10.0 PSF	DRW	HCUSR215 13022034
BC LL	0.0 PSF	HC-ENG	KD/AP
TOT.LD.	40.0 PSF	SEQN-	362568
DUR.FAC.	1.25	FROM	CDM
SPACING	24.0"	JREF-	1UT3215_Z01

NAIL SPACING DETAIL

MINIMUM SPACING FOR SINGLE BLOCK IS SHOWN. DOUBLE NAIL SPACINGS AND STAGGER NAILING FOR TWO BLOCKS. GREATER SPACING MAY BE REQUIRED TO AVOID SPLITTING.

BLOCK LOCATION, SIZE, LENGTH,GRADE AND TOTAL NUMBER AND TYPE OF NAILS ARE TO BE SPECIFIED ON SEALED DESIGN REFERENCING THIS DETAIL.

LOAD PERPENDICULAR TO GRAIN
A - EDGE DISTANCE AND SPACING BETWEEN STAGGERED ROWS OF NAILS (6 NAIL DIAMETERS)
B - SPACING OF NAILS IN A ROW (12 NAIL DIAMETERS)
C - END DISTANCE (15 NAIL DIAMETERS)

LOAD PARALLEL TO GRAIN
A - EDGE DISTANCE (6 NAIL DIAMETERS)
C - SPACING OF NAILS IN A ROW AND END DISTANCE (15 NAIL DIAMETERS)
D - SPACING BETWEEN STAGGERED ROWS OF NAILS (7 1/2 NAIL DIAMETERS)

IF NAIL HOLES ARE PREBORED, SOME SPACING MAY BE REDUCED BY THE AMOUNTS GIVEN BELOW:
* SPACING MAY BE REDUCED BY 50%
** SPACING MAY BE REDUCED BY 33%

MINIMUM NAIL SPACING DISTANCES

NAIL TYPE	DISTANCES A	B*	C**	D
8d BOX (0.113"X 2.5",MIN)	3/4"	1 3/8"	1 3/4"	7/8"
10d BOX (0.128"X 3.",MIN)	7/8"	1 5/8"	2"	1"
12d BOX (0.128"X 3.25",MIN)	7/8"	1 5/8"	2"	1"
16d BOX (0.135"X 3.5",MIN)	7/8"	1 5/8"	2 1/8"	1 1/8"
20d BOX (0.148"X 4.",MIN)	1"	1 7/8"	2 1/4"	1 1/8"
8d COMMON (0.131"X 2.5",MIN)	7/8"	1 5/8"	2"	1"
10d COMMON (0.148"X 3.",MIN)	1"	1 7/8"	2 1/4"	1 1/8"
12d COMMON (0.148"X 3.25",MIN)	1"	1 7/8"	2 1/4"	1 1/8"
16d COMMON (0.162"X 3.5",MIN)	1'	2"	2 1/2"	1 1/4"
GUN (0.120"X 2.5",MIN)	3/4"	1 1/2"	1 7/8"	1"
GUN (0.131"X 2.5",MIN)	7/8"	1 5/8"	2"	1"
GUN (0.120"X 3.",MIN)	3/4"	1 1/2"	1 7/8"	1"
GUN (0.131"X 3.",MIN)	7/8"	1 5/8"	2"	1"

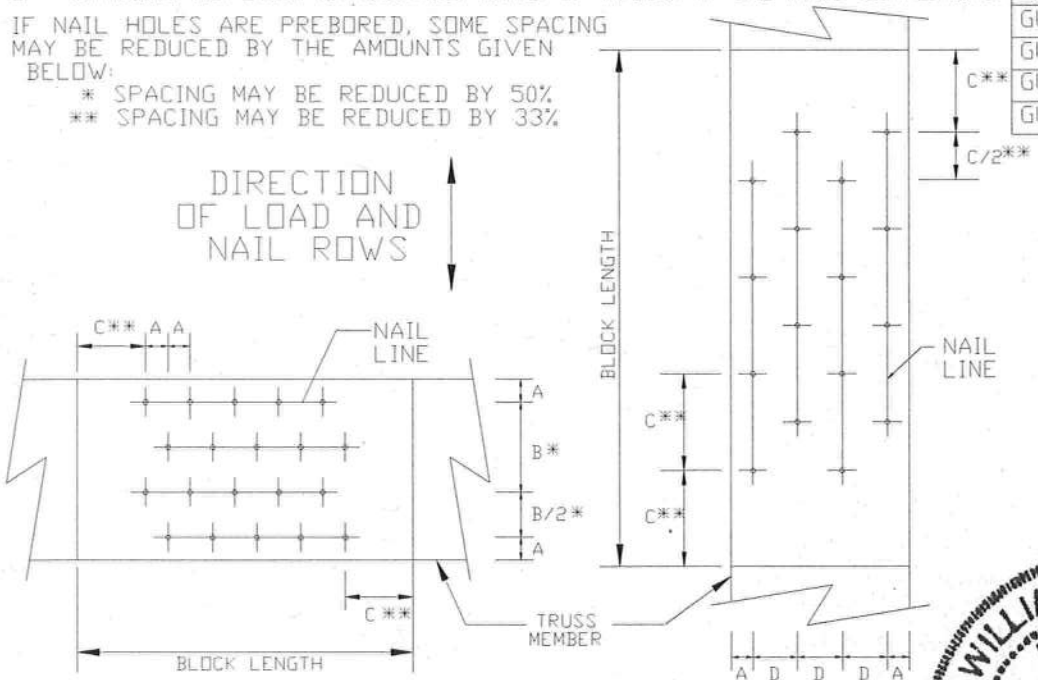

LOAD APPLIED PERPENDICULAR TO GRAIN LOAD APPLIED PARALLEL TO GRAIN

WILLIAM H. KRICK
LICENSE
No. 70861
STATE OF FLORIDA
PROFESSIONAL ENGINEER
01/22/2013
Jan 22 '13

ITW Building Components Group Inc.
Earth City, MO 63045

WARNING READ AND FOLLOW ALL NOTES ON THIS SHEET!
Trusses require extreme care in fabricating, handling, shipping, installing and bracing. Refer to and follow BCSI (Building Component Safety Information, by TPI and WTCA) for safety practices prior to performing these functions. Installers shall provide temporary bracing per BCSI. Unless noted otherwise, top chord shall have properly attached structural panels and bottom chord shall have properly attached rigid ceiling. Locations shown for permanent lateral restraint of webs shall have bracing installed per BCSI sections B3 & B7. See this job's general notes page for more info.

IMPORTANT FURNISH COPY OF THIS DESIGN TO INSTALLATION CONTRACTOR.
ITW Building Components Group Inc. (ITWBCG) shall not be responsible for any deviation from this design, any failure to build the truss in conformance with TPI, or fabricating, handling, shipping, installing & bracing of trusses. ITWBCG connector plates are made of 20/18/16GA (W,H/S/K) ASTM A653 grade 37/40/60 (K/W/H,S) galv. steel. Apply plates to each face of truss, positioned as shown above and on Joint Details.
A seal on this drawing or cover page indicates acceptance and professional engineering responsibility solely for the truss component design shown. The suitability and use of this component for any building is the responsibility of the Building Designer per ANSI/TPI 1 Sec. 2.
ITW-BCG: www.itwbcg.com; TPI: www.tpinst.com; WTCA: www.sbcindustry.com; ICC: www.iccsafe.org

REF	NAIL SPACE
DATE	1/1/09
DRWG	CNNAILSP0109

CLB WEB BRACE SUBSTITUTION

THIS DETAIL IS TO BE USED WHEN CONTINUOUS LATERAL BRACING (CLB) IS SPECIFIED ON A TRUSS DESIGN BUT AN ALTERNATIVE WEB BRACING METHOD IS DESIRED.

NOTES:

THIS DETAIL IS ONLY APPLICABLE FOR CHANGING THE SPECIFIED CLB SHOWN ON SINGLE PLY SEALED DESIGNS TO T-BRACING OR SCAB BRACING.

ALTERNATIVE BRACING SPECIFIED IN CHART BELOW MAY BE CONSERVATIVE. FOR MINIMUM ALTERNATIVE BRACING, RE-RUN DESIGN WITH APPROPRIATE BRACING.

WEB MEMBER SIZE	SPECIFIED CLB BRACING	ALTERNATIVE BRACING T OR L-BRACE	ALTERNATIVE BRACING SCAB BRACE
2X3 OR 2X4	1 ROW	2X4	1-2X4
2X3 OR 2X4	2 ROWS	2X6	2-2X4
2X6	1 ROW	2X4	1-2X6
2X6	2 ROWS	2X6	2-2X4(*)
2X8	1 ROW	2X6	1-2X8
2X8	2 ROWS	2X6	2-2X6(*)

T-BRACE, L-BRACE AND SCAB BRACE TO BE SAME SPECIES AND GRADE OR BETTER THAN WEB MEMBER UNLESS SPECIFIED OTHERWISE ON ENGINEER'S SEALED DESIGN.

(*) CENTER SCAB ON WIDE FACE OF WEB. APPLY (1) SCAB TO EACH FACE OF WEB.

T-BRACING OR L-BRACING:

APPLY TO EITHER SIDE OF WEB NARROW FACE.
ATTACH WITH 10d BOX OR GUN (0.128"x 3",MIN) NAILS.
AT 6" O.C.
BRACE IS A MINIMUM 80% OF WEB MEMBER LENGTH

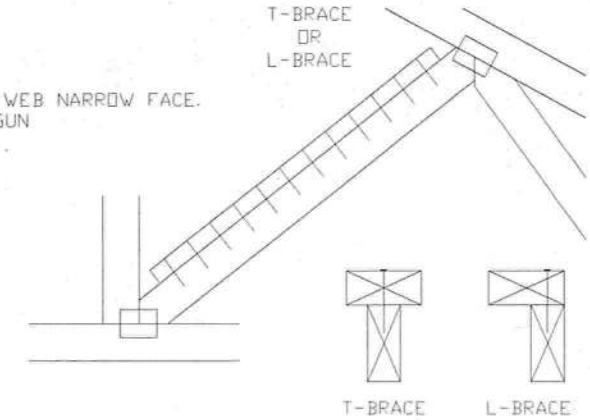

SCAB BRACING:

APPLY SCAB(S) TO WIDE FACE OF WEB.
NO MORE THAN (1) SCAB PER FACE.
ATTACH WITH 10d BOX OR GUN (0.128"x 3",MIN) NAILS.
AT 6" O.C.
BRACE IS A MINIMUM 80% OF WEB MEMBER LENGTH

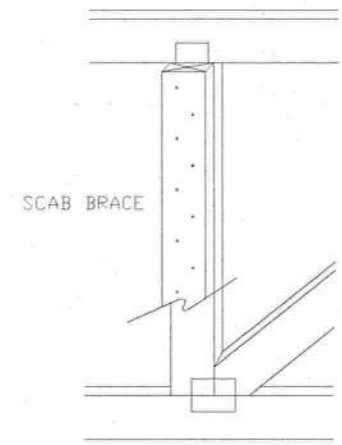

WILLIAM H. KRICK
LICENSE
No. 70861
STATE OF FLORIDA
PROFESSIONAL ENGINEER
01/22/2013

Jan 22 '13

TW
Building Components Group Inc.
Earth City, MO 63045

WARNING READ AND FOLLOW ALL NOTES ON THIS SHEET!
Trusses require extreme care in fabricating, handling, shipping, installing and bracing. Refer to and follow BCSI (Building Component Safety Information, by TPI and WTCA) for safety practices prior to performing these functions. Installers shall provide temporary bracing per BCSI. Unless noted otherwise, top chord shall have properly attached structural panels and bottom chord shall have properly attached rigid ceiling. Locations shown for permanent lateral restraint of webs shall have bracing installed per BCSI sections B3 & B7. See this job's general notes page for more info.

IMPORTANT FURNISH COPY OF THIS DESIGN TO INSTALLATION CONTRACTOR.
ITW Building Components Group Inc. (ITWBCG) shall not be responsible for any deviation from this design, any failure to build the truss in conformance with TPI, or fabricating, handling, shipping, installing & bracing of trusses. ITWBCG connector plates are made of 20/18/16GA (W,H/S/K) ASTM A653 grade 37/40/60 (K/W/H,S) galv. steel. Apply plates to each face of truss, positioned as shown above and on Joint Details.
A seal on this drawing or cover page indicates acceptance and professional engineering responsibility solely for the truss component design shown. The suitability and use of this component for any building is the responsibility of the Building Designer per ANSI/TPI 1 Sec. 2.
ITW-BCG: www.itwbcg.com; TPI: www.tpinst.com; WTCA: www.sbcindustry.com; ICC: www.iccsafe.org

TC LL	PSF	REF	CLB SUBST.
TC DL	PSF	DATE	1/1/09
BC DL	PSF	DRWG	BRCLBSUB0109
BC LL	PSF		
TOT. LD.	PSF		
DUR. FAC.			
SPACING			