AREA OF ATTIC	REQ'D L.F. OF VENT	NET FREE AREA OF INTAKE
1600 SF	20 LF	410 SQ.IN.
1900 SF	24 LF	490 SQ.IN.
2200 SF	28 LF	570 SQ.IN.
2500 SF	32 LF	650 SQ.IN.
2800 SF	36 LF	730 SQ.IN.
3100 SF	40 LF	820 SQ.IN.
3600 SF	44 LF	900 SQ.IN.

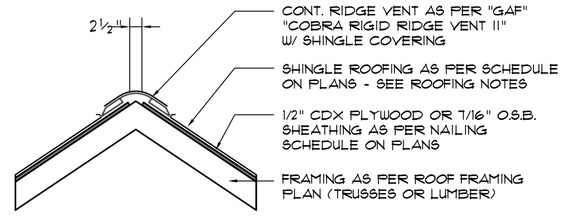

MIAMI/DADE PRODUCT APPROVAL REPORT: #98-0713.05

Ridge Vent DETAIL

SCALE: 3/4" = 1'-0"

R1

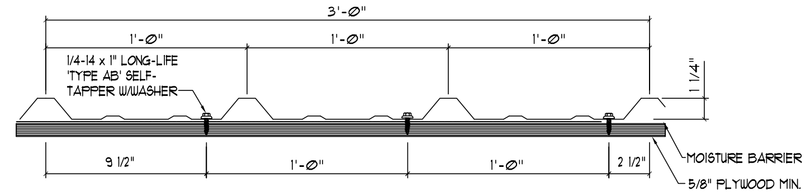

PBR FASTENER SPACING @ INTERMEDIATE SUPPORTS

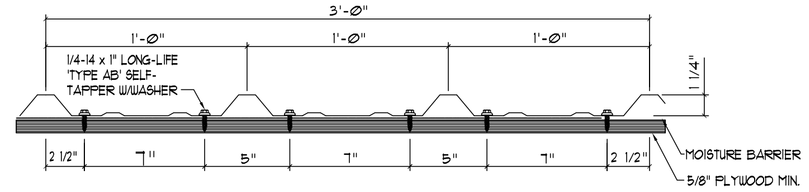

PBR FASTENER SPACING @ PANEL ENDS

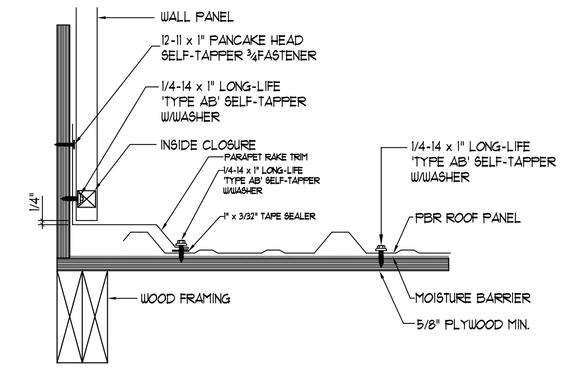

RAKE PARAPET OR SHEETED WALL

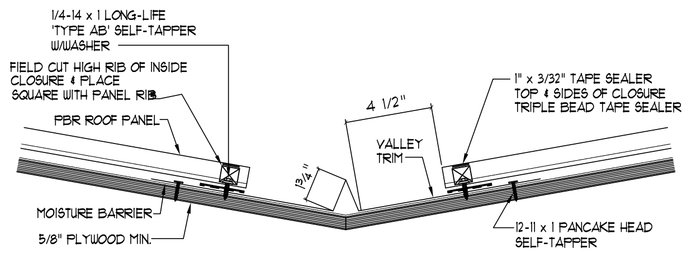

STANDARD VALLEY DETAIL

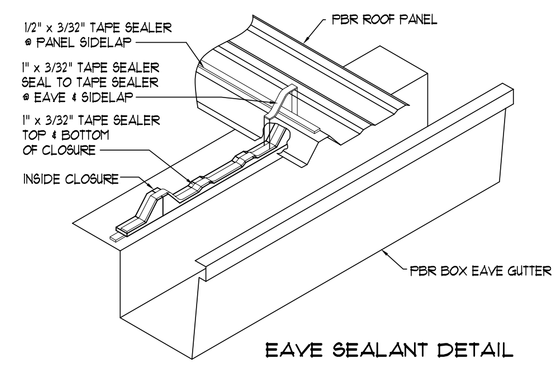

EAVE SEALANT DETAIL

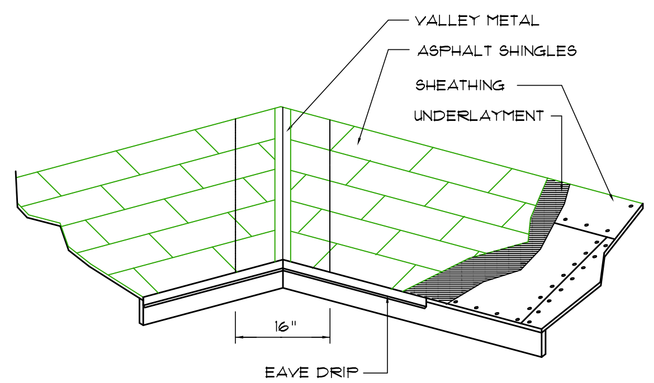

VALLEY FLASHING

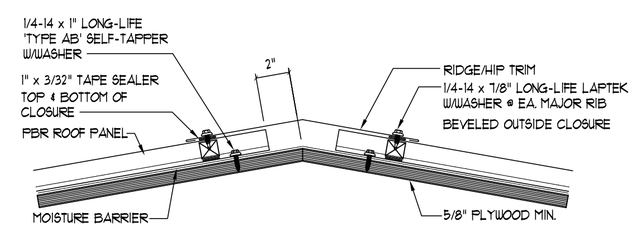

PBR FASTENER SPACING @ PANEL ENDS

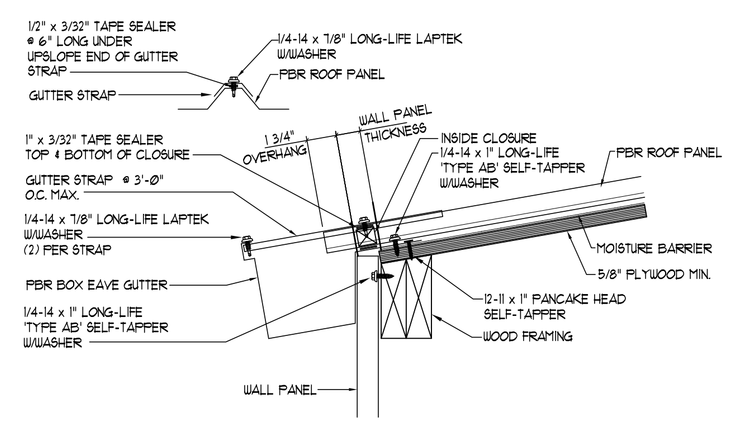

EAVE WITH BOX EAVE GUTTER

Metal Roofing NOTES:

DECK REQUIREMENTS:
METAL PANELS MUST BE FASTENED TO MIN. 1/2" CDX PLYWOOD.

SLOPE:
METAL PANELS SHALL BE USED ONLY ON ROOF SLOPES OF 3:12 OR GREATER TO INSURE PROPER DRAINAGE.

CAULKING:
MUST BE APPROVED BY THE MANUFACTURER, BUTYL SEALANT SUPPLIED IN TAPE OR GUN-GRADE FORM.

METAL PANEL:
METAL PANELS SHALL BE
MIN. 26 GUAGE AND COMPLY WITH ASTM A-792 AND D 7-98
EXPOSURE C AS ADOPTED IN SOUTH FLORIDA.

FASTENERS:
FASTENERS FOR METAL PANELS SHALL BE GALVANIZED
WOOD FAST SCREW, MINIMUM OF #9 X 1 1/2" HEX HEAD.

ATTACHMENT:
METAL PANELS SHALL BE SECURED TO THE ROOF WITH NOT LESS THAN 24" O.C. WHERE ROOF IS LOCATED IN BASIC WIND SPEED OF 110 MPH OR GREATER, SPECIAL METHODS OF FASTENING ARE REQUIRED. UNLESS OTHERWISE NOTED, ATTACHMENT OF METAL PANELS SHALL CONFORM WITH ASTM E 330 OR PA 125.

BASE AND CAP FLASHINGS:
BASE AND CAP FLASHING SHALL BE INSTALLED IN ACCORDANCE W/ MFG'RS INSTALLATION INSTRUCTIONS.

1. RC-1 - RIDGE CAP
2. ED-1 - EAVE DRIP
3. EF-3 - EAVE FLASHING
4. SW-1 - SIDEWALL FLASHING
5. EW-1 - ENDWALL FLASHING
6. GR-4 - GABLE END OR RAKE BOARD FLASHING
7. TF-1 - TRANSITION FLASHING
8. PV-2 - PREFORMED VALLEY FLASHING
9. BUTYL TAPE
10. SEALANT TAPE
11. PIPEBOOT

UNDERLAYMENT APPLICATION:
FOR ROOF SLOPES FROM 3:12 TO 4:12, UNDERLAYMENT SHALL BE A MINIMUM OF TWO LAYERS APPLIED AS FOLLOWS:

1. STARTING AT THE EAVE, A 19 INCH STRIP OF UNDERLAYMENT SHALL BE APPLIED PARALLEL WITH THE EAVE AND FASTENED SUFFICIENTLY TO STAY IN PLACE.
2. STARTING AT THE EAVE, 36 INCH WIDE STRIPS OF UNDERLAYMENT FELT SHALL BE APPLIED OVERLAPPING SUCCESSIVE SHEETS 19 INCHES AND FASTENED SUFFICIENTLY TO STAY IN PLACE.

FOR ROOF SLOPED 4:12 AND GREATER, UNDERLAYMENT SHALL BE A MINIMUM OF ONE LAYER OF UNDERLAYMENT FELT APPLIED AS FOLLOWS:
STARTING AT THE EAVE, UNDERLAYMENT SHALL BE APPLIED SHINGLE FASHION PARALLEL TO THE EAVE, LAPPED 2 INCHES, AND FASTENED SUFFICIENTLY TO STAY IN PLACE.

BASE AND CAP FLASHINGS:
BASE AND CAP FLASHING SHALL BE INSTALLED IN ACCORDANCE W/ MFGR'S INSTALLATION INSTRUCTIONS. BASE FLASHING SHALL BE EITHER CORROSION RESISTANT METAL OF MINIMUM NOMINAL THICKNESS 0.019 INCH OR MINERAL SURFACE ROLL ROOFING WEIGHING A MINIMUM OF 77 LBS PER 100 SQUARE FEET. CAP FLASHING SHALL BE CORROSION RESISTANT METAL OF MINIMUM NOMINAL THICKNESS OF 0.019 INCH.

VALLEYS:
VALLEY LININGS SHALL BE INSTALLED IN ACCORDANCE W/ MANUFACTURER'S INSTALLATION INSTRUCTIONS BEFORE APPLYING ROOFING MATERIAL. VALLEY LININGS OF THE FOLLOWING TYPES SHALL BE PERMITTED:

1. OPEN VALLEYS LINED WITH METAL. THE VALLEY LINING SHALL BE AT LEAST 16" WIDE AND OF ANY OF THE CORROSION RESISTANT METALS IN FBC TABLE 1507.3.9.2.
2. OPEN VALLEYS: VALLEY LINING OF TWO PLIES OF MINERAL SURFACE ROLL ROOFING SHALL BE PERMITTED. THE BOTTOM LAYER SHALL BE 18 INCHES AND THE TOP LAYER A MINIMUM OF 36 INCHES WIDE.
3. CLOSED VALLEYS: VALLEY LINING SHALL BE ONE OF THE FOLLOWING:
   1. BOTH TYPES I AND 2 ABOVE, COMBINED.
   2. ONE PLY OF SMOOTH ROLL ROOFING AT LEAST 36 INCHES WIDE AND COMPLYING WITH ASTM D 224.
   3. SPECIALTY UNDERLAYMENT AT LEAST 36 INCHES WIDE & COMPLYING WITH ASTM D 1970.

ROOFING METALS for FLASHING/ROOFING MINIMUM THICKNESS REQUIREMENTS			
MATERIAL	MINIMUM THICKNESS (in)	GAGE	WEIGHT (OZ.)
COPPER			16
ALUMINUM	0.024		
STAINLESS STEEL		28	
GALVANIZED STEEL	0.0179	26 (ZINC COATED G90)	
ZINC ALLOY LEAD PAINTED TERNE	0.027		40 20

Roofing/Flashing DETS.

SCALE: NONE

R2

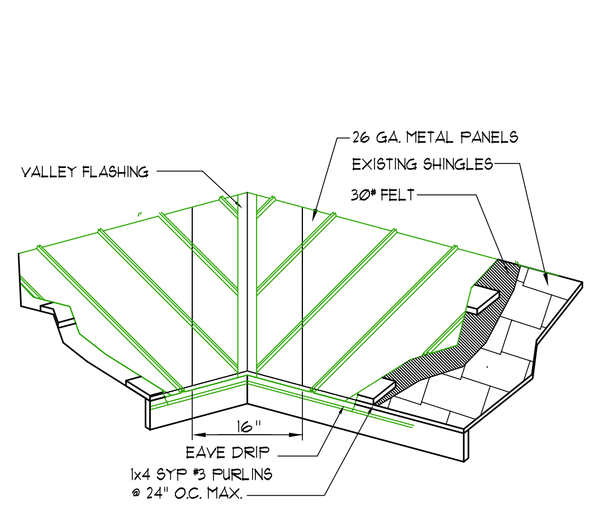

VALLEY FLASHING

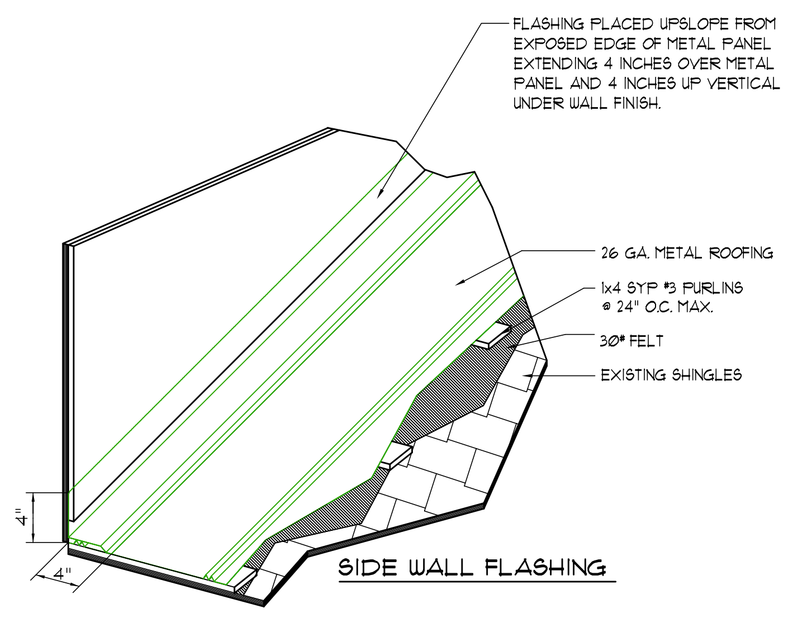

SIDE WALL FLASHING

ALTERNATE FASTENER SCHEDULE FOR VARIOUS WIND VELOCITIES
MANUFACTURER'S RECOMMENDED FASTENER SCHEDULE FOR BUILDINGS WITH MEAN HEIGHT UNDER 30 FT. & 3/12 PITCH BASED ON ASCE 7-98, EXPOSURE "C"

ROOF ZONE	FASTENER TYPE	FASTENER SIZE	PLACEMENT TO	90 - 110 TRIM	90 - 110 O/C SPACING	120 - 130 TRIM	120 - 130 O/C SPACING
1	WD. SCREW	#9 X 1 1/2"	WOOD	18"	36"	12"	24"
	MTL. SCR.	#12 X 1" #14 X 7/8"	< 18 GA. > 18 GA.	18"	36"	12"	24"
2 & 3	WD. SCREW	#9 X 1 1/2"	WOOD	18"	36"	12"	24"
	MTL. SCR.	#12 X 1" #14 X 7/8"	< 18 GA. > 18 GA.	18"	36"	12"	24"

TYPICAL PBR ROOFING DETAILS

RE-ROOFING OVER SHINGLES

R3

— P B R M e t a l R o o f D e t a i l s —

REVISION:

Copyright 2020 © N.P. Geisler, Architect

DRAWN: NPG

CUSTOM RESIDENTIAL DESIGN for
AREA 36
COLUMBIA COUNTY, FLORIDA
ROOFING DETAILS

Celebrating 48 Years of Service 1972 - 2020 N.P. Geisler, Architect AR0007005

NICHOLAS PAUL GEISLER ARCHITECT
N.C.A.R.B. Certified
1758 NW Brown Rd.
Lake City, FL 32055
386-365-4355

DATE: 28 OCT 2020

COMM: 2K2093

SHEET: A.8

8 OF 12

Digitally signed by: N.P. GEISLER
DN: CN = N.P. GEISLER C = US
O = AR0007005 OU = ARCHITECT
Date: 2021.01.19 15:14:53 -05'00'

AR0007005

These drawings, as instruments of service, are the sole property of the architect, and may not be used, copied or reproduced in whole or in part for use on or incorporated within any other job without specific and individual authorization by the architect.

ALL DRAWINGS NOT TO BE SCALED, WRITTEN DIMENSIONS TAKE PRECEDENCE OVER SCALED DIMENSIONS