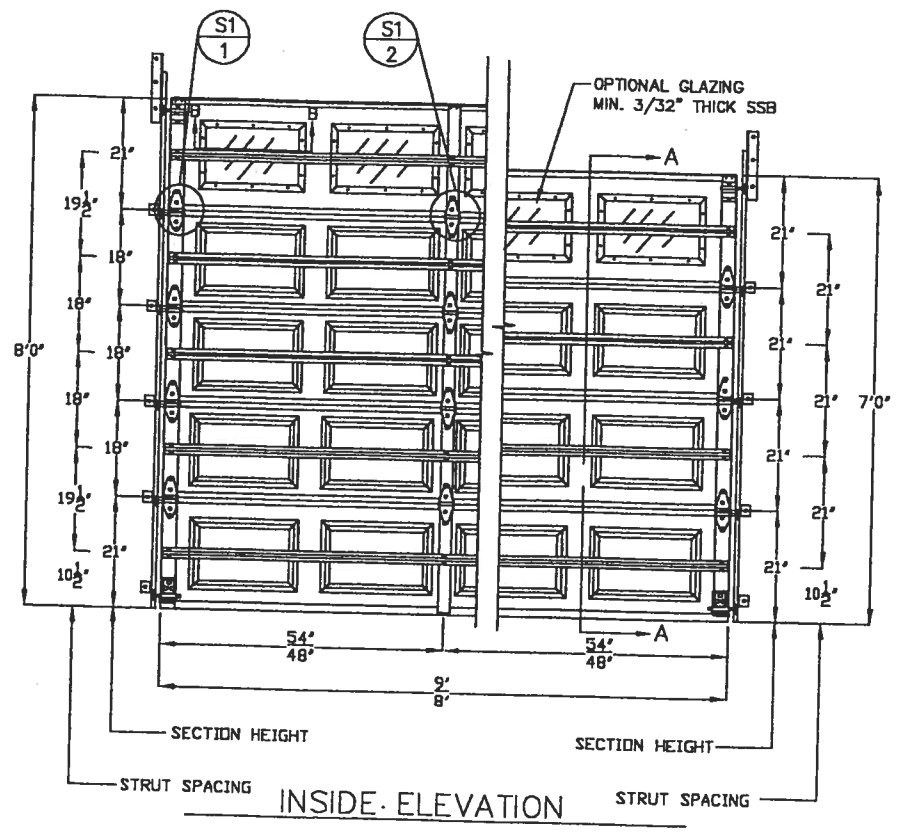

INSIDE ELEVATION

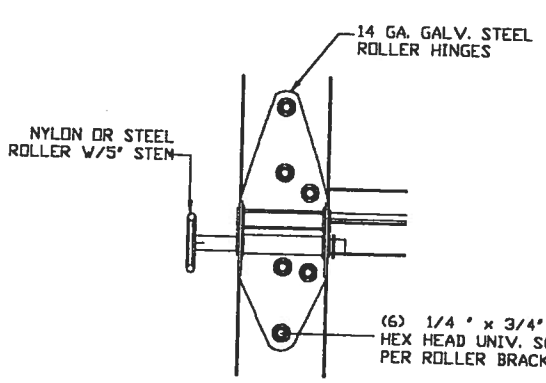

TYP. ROLLER BRACKET (S1/1)
N.T.S.

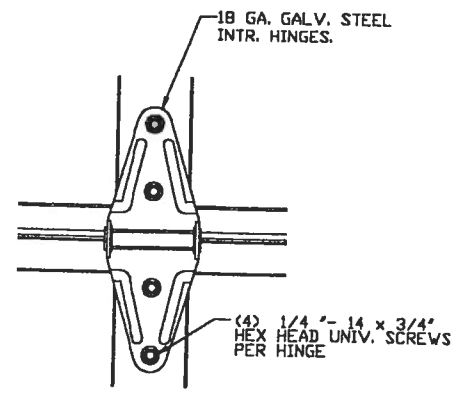

TYP. HINGE CONNECTION (S1/2)
N.T.S.

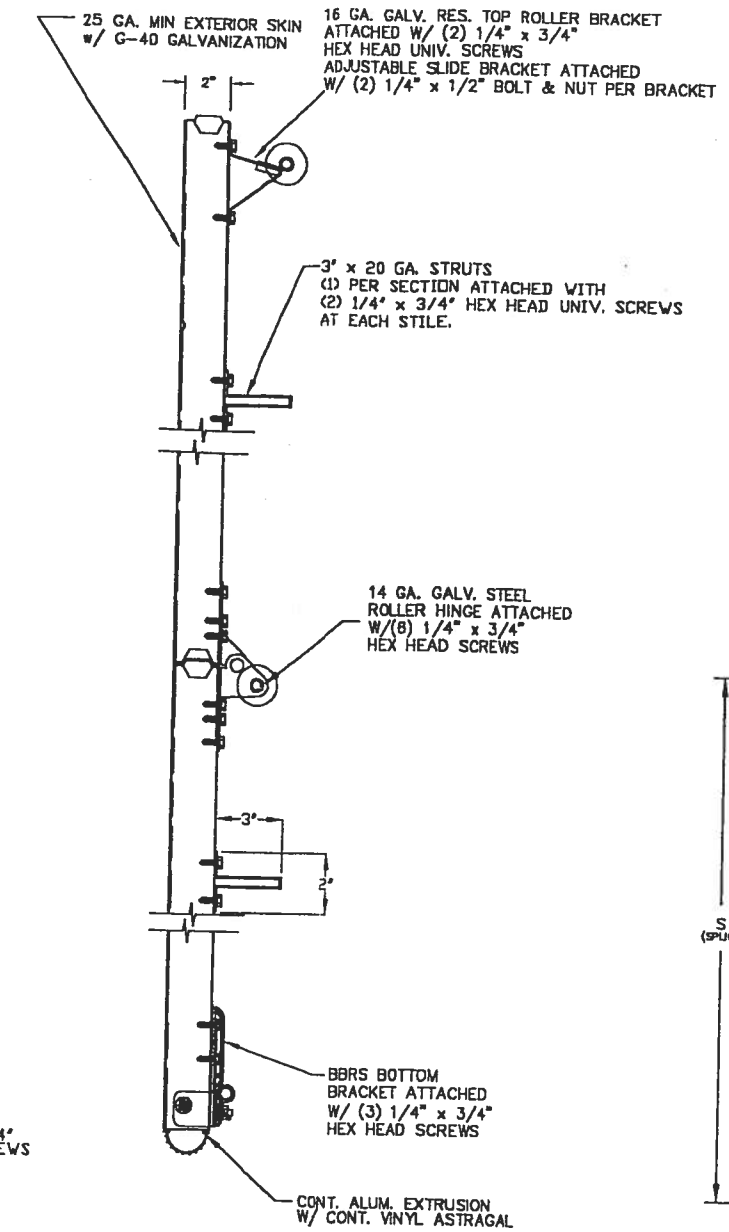

SECTION A–A (SIDE VIEW)

GLAZING OPTION CROSS SECTION

TEST No. SBC-580-011 ON OCTOBER 12, 1995 INCLUDED GLASS WINDOWS IN THE DOOR BEING USED. THE TEST PRESSURES WERE +48.4 PSF AND −54.7 PSF. BY COMPARISION, FOUR (4) WINDOWS MAY BE INSTALLED IN (1) ONE SECTION OF THE 9' X 7' AND 9' X 8' MODEL 600 AND 950 DOORS.

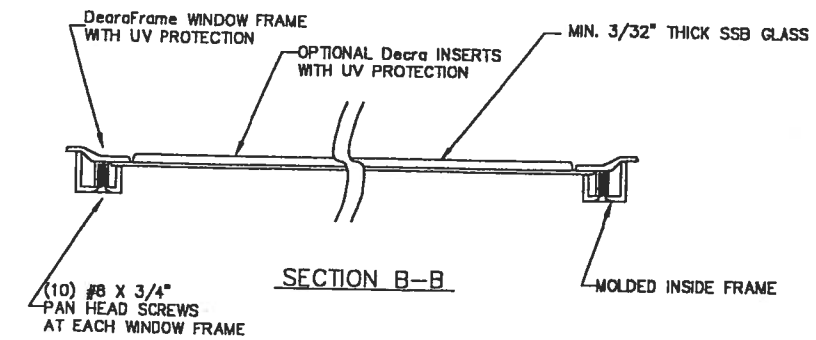

SECTION B–B

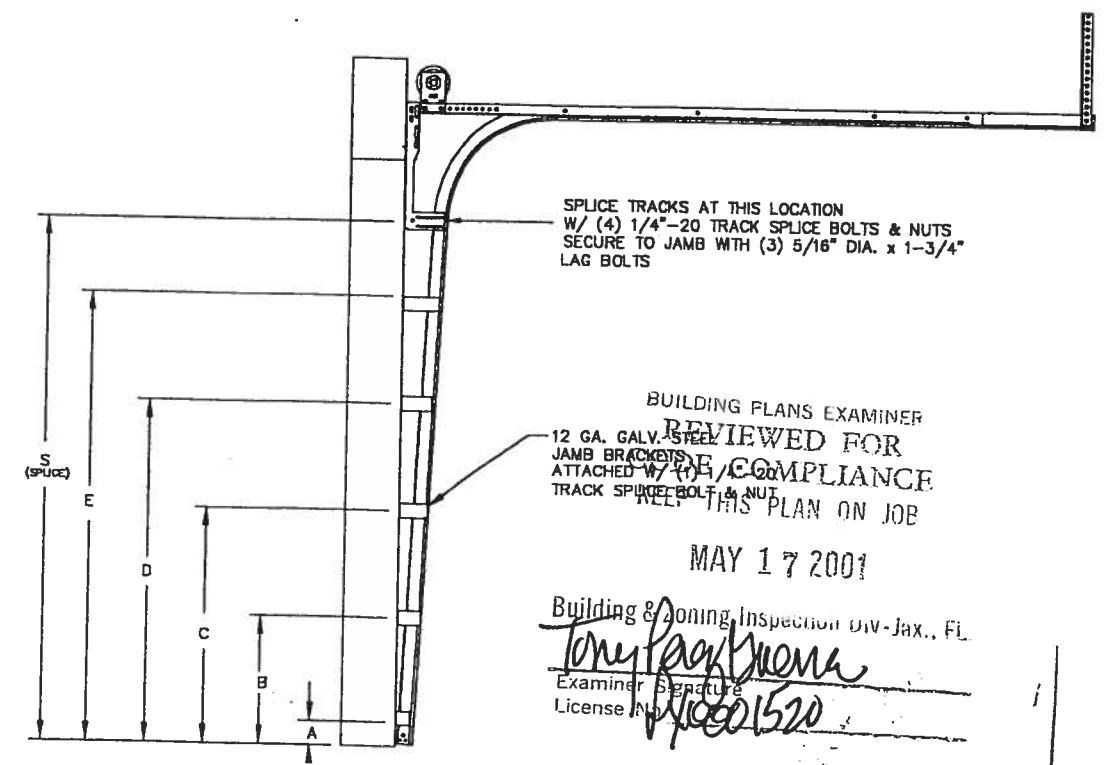

TRACK CONFIGURATION FOR 6'6" UP TO 8' TALL DOORS

BUILDING PLANS EXAMINER
REVIEWED FOR CODE COMPLIANCE
NOT REVIEWED THIS PLAN ON JOB

MAY 17 2001

Building & Zoning Inspection Div-Jax., FL
Examiner Signature
License No. M/10001520

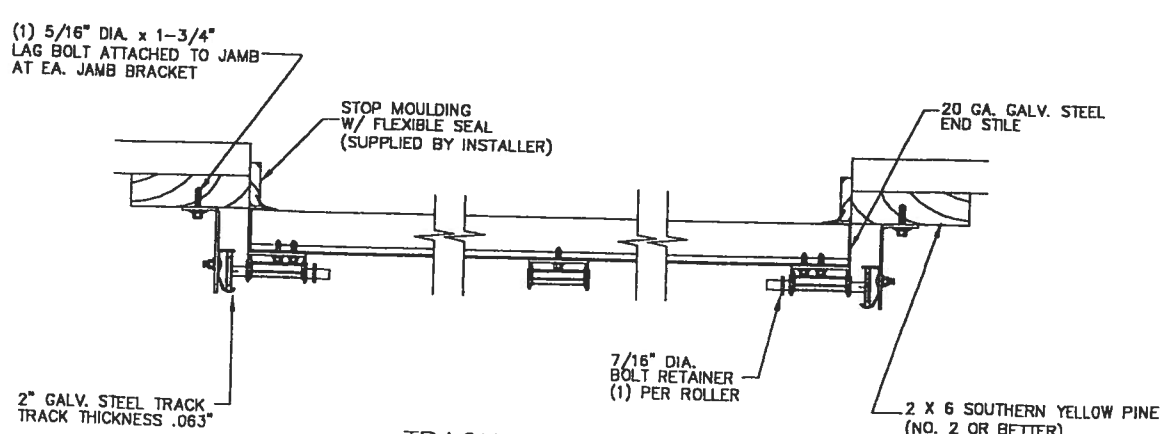

TRACK MOUNTING DETAIL

WOOD JAMB ATTACHMENT TO STRUCTURE

RATED FOR 110 MPH FASTEST-MILE BASIC WIND SPEEDS

VERTICAL JAMB ATTACHMENT TO WOOD FRAME STRUCTURE
5/16" X 3" LAG SCREWS STARTING 6" FROM ENDS THEN 24" O.C.

VERTICAL JAMB ATTACHMENT TO 2,000 PSI CONCRETE
HILTI KWIK BOLT 3/8" X 4" STARTING 6" FROM ENDS THEN 24" O.C.
HILTI SLEEVE ANCHOR 3/8" X 2-3/4" STARTING 6" FROM ENDS THEN 24" O.C.
ITW/RAMSET RED HEAD 3/8" X 3" STARTING 6" FROM ENDS THEN 24" O.C.

VERTICAL JAMB ATTACHMENT TO C-90 BLOCK
HILTI SLEEVE ANCHOR 3/8" X 2-3/4" STARTING 6" FROM ENDS THEN 24" O.C.
ITW/RAMSET TAPCON 1/4" X 2-3/4" STARTING 6" FROM ENDS, USE PAIRS OF FASTENERS (3" APART) AT 24" O.C.

*LAGS AND BOLTS CAN BE COUNTERSUNK TO PROVIDE A FLUSH MOUNTING SURFACE.
*PREPARATION OF WOOD JAMBS BY OTHERS

JAMB BRACKET LOCATIONS

	A	B	C	D	E	S
6'-6"	4"	21-1/2"	39"	57"		70"
7'-0"	4"	21-1/2"	42"	63"		76"
7'-6"	4"	18"	36"	54"	72"	82"
8'-0"	4"	21-1/2"	39"	57"	75"	88"

SPECIFICATIONS AND NOTES

1. DOORS AND HARDWARE WILL BE DESIGNED, MANUFACTURED AND INSTALLED WITH STANDARDS AS SET FORTH BY DASMA.
2. DOOR SECTIONS SHALL BE 25 GA. (.019") MIN. ROLL FORMED LIGHT COMMERCIAL QUALITY, G-40 GALVANIZATION.
3. DOORS UPTO 7'0" HIGH CONSIST OF (4) SECTIONS AS SHOWN.
4. DOORS UPTO 8'0" HIGH CONSIST OF (5) SECTIONS AS SHOWN.
5. SUPPORTING STRUCTURAL ELEMENTS SHALL BE DESIGNED BY A REGISTRED PROFESSIONAL ENGINEER FOR WIND LOADS INDICATED ON THIS DRAWING IN ADDITION TO OTHER LOADINGS.
6. THE METHOD OF TESTING WAS IN SUBSTANTIAL CONFORMANCE WITH THE PROCEDURE DESCRIBED IN ASTM E330-90, AND THE SOUTHERN BUILDING CODE SECTION 1606 WIND LOAD DESIGN CRITERIA THE PRESSURES SHOWN ON THE DRAWINGS WERE CALCULATED USING THE FOLLOWING PARAMETERS:
   A. BASIC WIND SPEED OF 110 MPH
   B. DOOR CAN BE INSTALLED WITH 5 FEET OF DOORS WIDTH INSIDE THE EDGE STRIP.
   C. 15' MEAN ROOF HEIGHT AT ANY SLOPE
   D. USE FACTOR OF 1.0
   E. EXPOSURE RATING OF C

MAX SIZE 9' x 8'

DESIGN LOADS +28.7 PSF −31.3 PSF

TEST LOADS +43.0 PSF −46.9 PSF

REV	DESCRIPTION OF REVISIONS	DATE	BY

Amarr GARAGE DOORS
5931 GRASSY CREEK BLVD. WINSTON-SALEM, N.C. 27103

MODEL #600 STRATFORD
MODEL #950 HERITAGE III

SIZE	DRAWN BY DLJ	DATE 04/10/01	DRAWING NUMBER
B	CHECKED BY	DATE	SBC-580-007-J
SCALE: NOT TO SCALE			SHEET 1 OF 1

A(9/0)