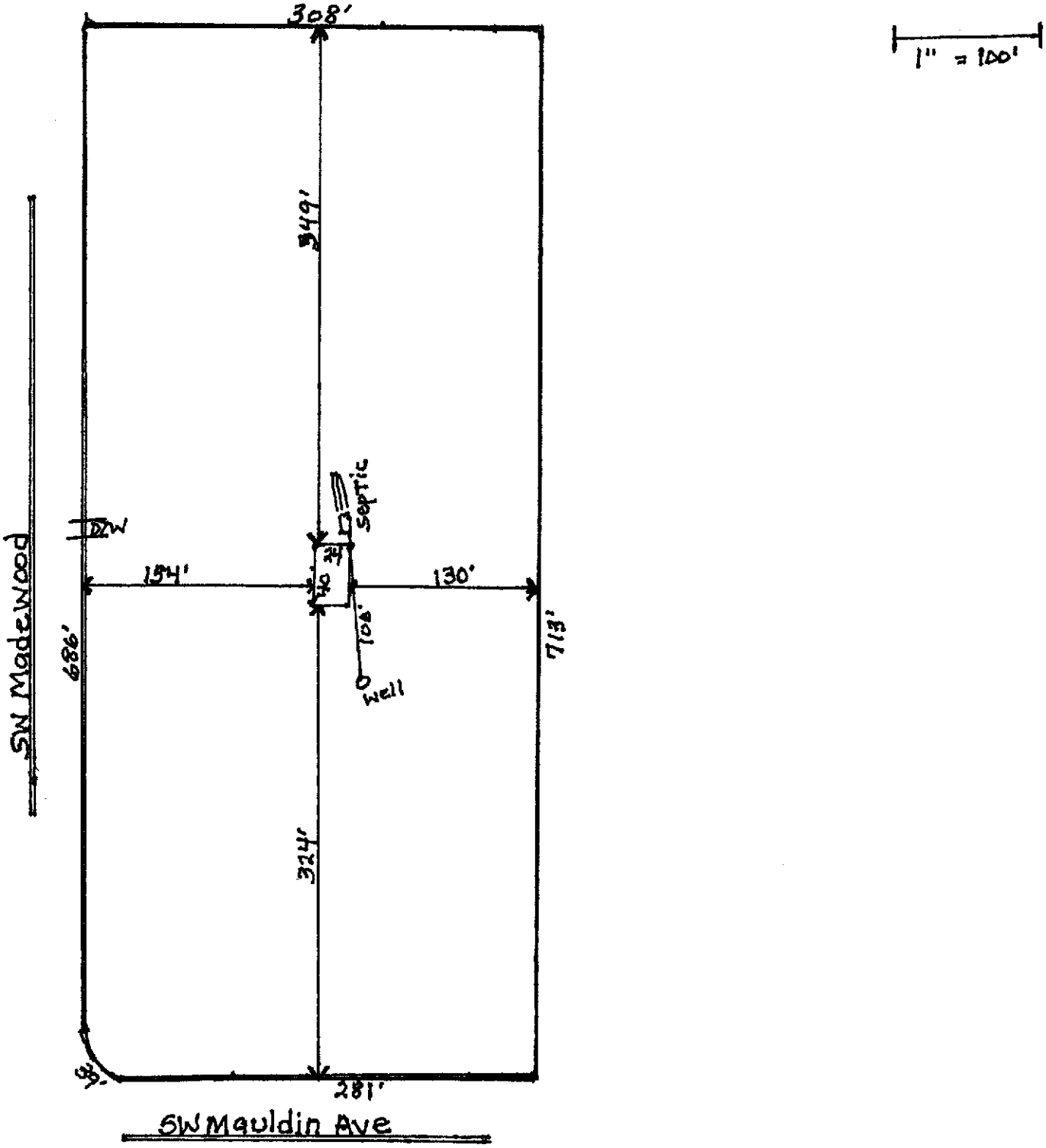
308'
1" = 100'
349'
Septic
DZW
154'
130'
34
40
108'
686'
713'
Well
SW Madewood
324'
38'
281'
SW Mauldin Ave

Humanes