OPTIONAL WOOD RAILING AND SPINDELS IN LIEU OF 42" DRYWALL SLOPED WALL

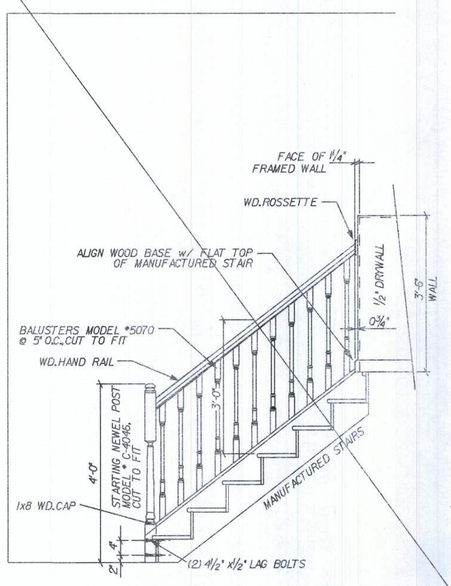

STAIR @ TOP OF LANDING [LEFT]

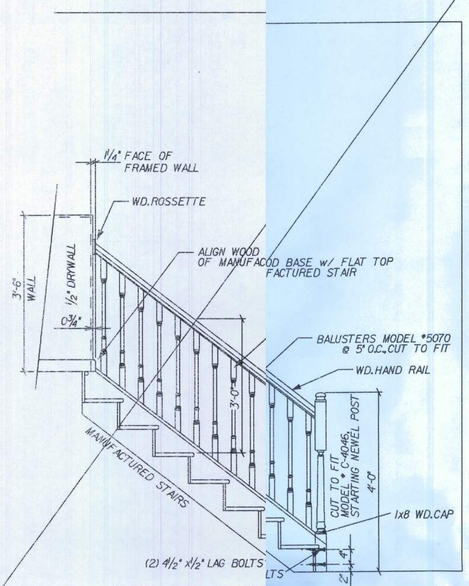

STAIR @ TOP OF LANDING [RIGHT]

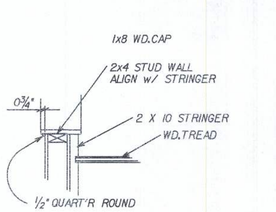

SECTION B

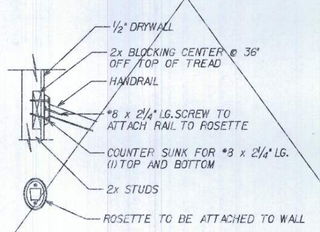

RAIL ATTACHMENT TO WALL

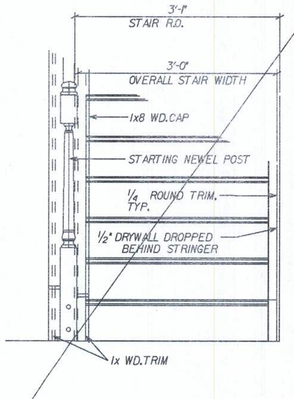

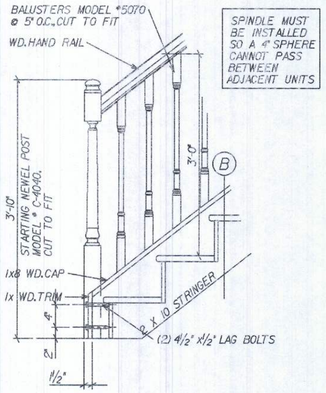

OPTIONAL OPEN RAIL STAIR DETAILS

REVISED 01-25-05 SCALE: 3/4" = 1'-0"

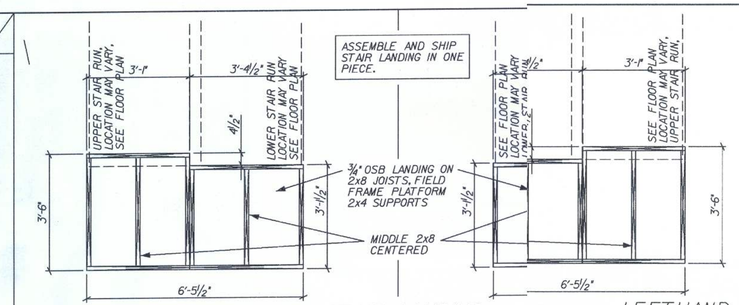

RIGHTHAND STAIR LANDING LEFTHAND

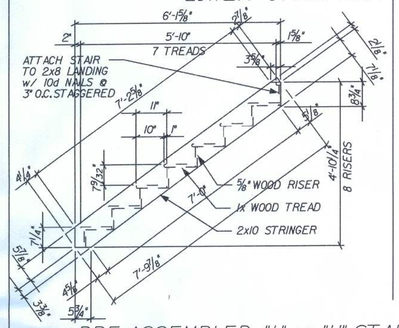

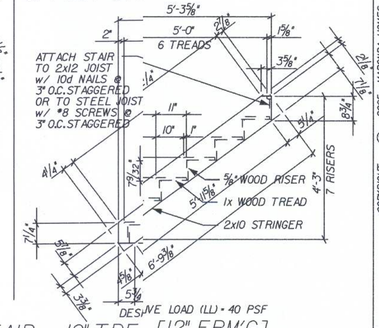

PRE-ASSEMBLED "L" or "U" STAIR : 10" TREADS [12" FRM'G]

REVISED 02-14-05 SCALE: 3/8" = 1'-0"

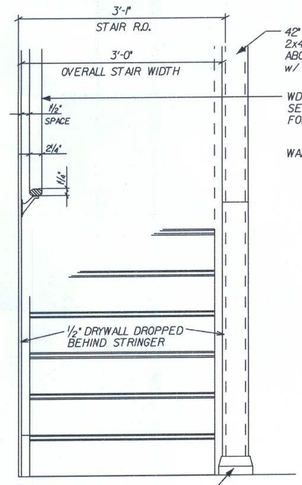

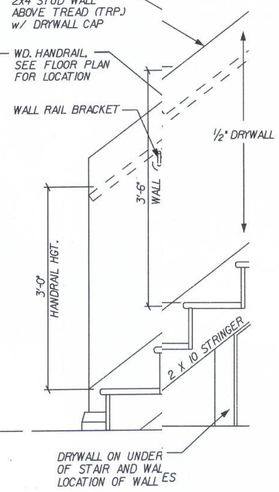

STANDARD STAIR w/ 42" HIGH WALL

REVISED 01-25-05 SCALE: 3/4" = 1'-0"

REVISIONS :
10-01-05 FBC 2004 - RESIDENTIAL
10-21-05 RIGHTHAND/LEFTHAND LANDINGS

COPYRIGHT © 2005 MARONDA HOMES

Maronda Homes

(407) 321-0064 4005 MARONDA WAY SANFORD, FLORIDA

05

12" FRM'G 15 RISER : "L" STAIR

STAIR DETAILS

PLOT DATE: 03 FEB 2006 GARAGE:

RELEASE DATE: 03-22-05

p:\1houses_05\gallery\ath\5-109_251.str

Maronda Systems
4005 Maronda Way
Sanford, FL 32771
(407)321-0064

Tomas Ponce P.E.
License No. 0050068
January 25, 2011

SHEET: STR

03 FEB 2006 09:30:07

1S DRAWING WAS PRINTED BY USING THE TAMERAN VIVOS SOFTWARE AND HAS BEEN REVIEWED BY SE, MF, JG, TP, EB, DR, TT AND TT.

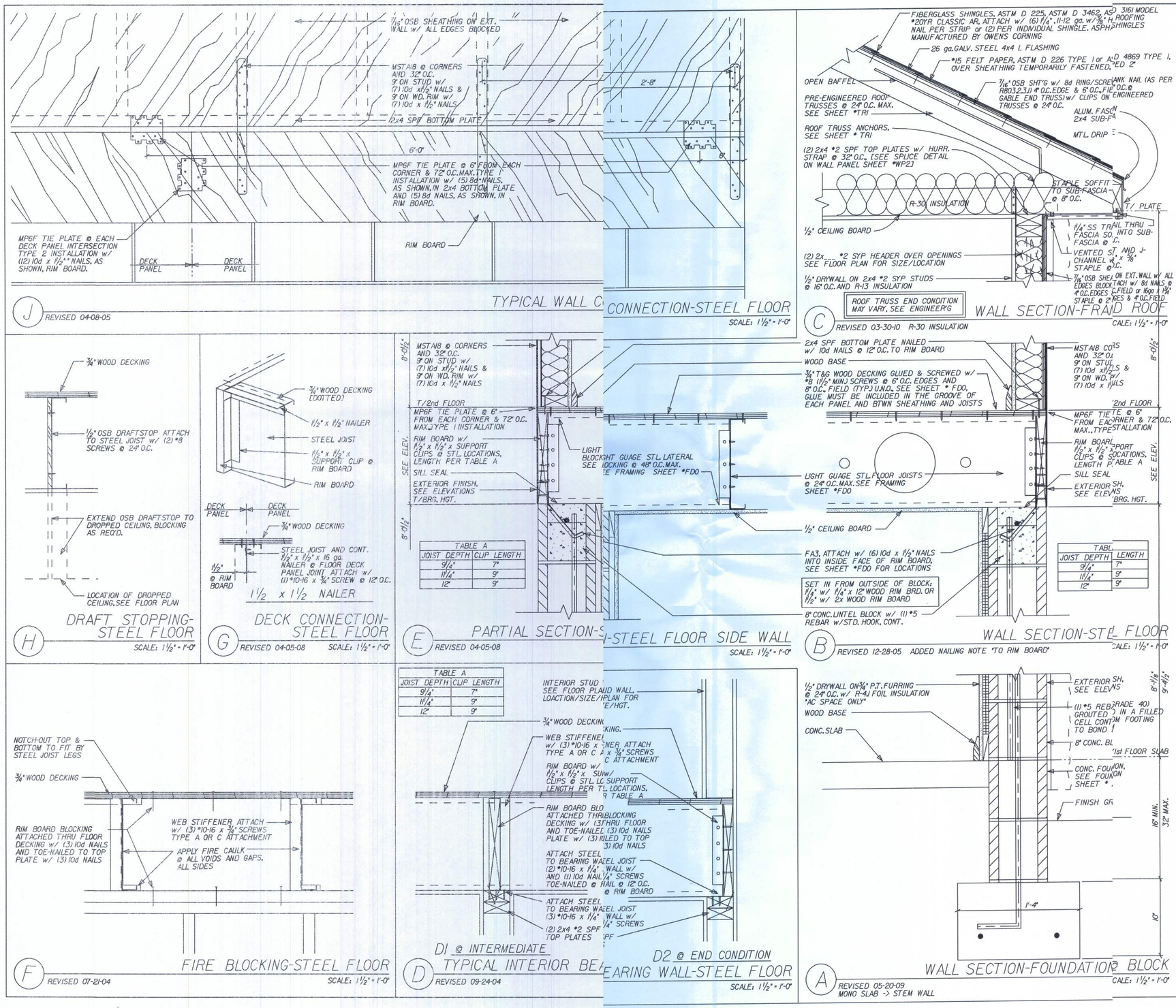

FLORIDA BUILDING CODE 2007 : RESIDENTIAL

REVISIONS :

03-01-09 REV. CODE INFORMATION

COPYRIGHT © 2005 MARONDA HOMES

Maronda Homes
(407) 321-0064 4005 MARONDA WAY SANFORD, FLORIDA

FLORIDA
THIS STRUCTURE WAS DESIGNED IN ACCORDANCE AND MEETS THE REQUIREMENTS OF SECTION R301 OF THE FLORIDA BUILDING CODE, 2007, RESIDENTIAL, AND ALL PLANS, DETAILS, CONNECTORS HAVE BEEN CHECKED TO MEET THE WIND LOADS REQUIRED FOR EXPOSURE B, ENCLOSED BUILDING.

DESIGNED WIND SPEED: 120mph 3 sec.GUST

p:\1\bouks_stek\bdy\ury\dt\ri_ws-si.dwl.dwg

TWO STORY | WALL SECTIONS

BAYBURY

GARAGE:

DRAWN BY:

RELEASE DATE: 03-22-05

16:28:26

PLOT DATE: 24 JUN 2010

Maronda Systems
4005 Maronda Way
Sanford, FL 32771
(407)321-0064

Tomas Ponce P.E.
License No. 0050068
January 25, 2011

SHEET:
WS-SI

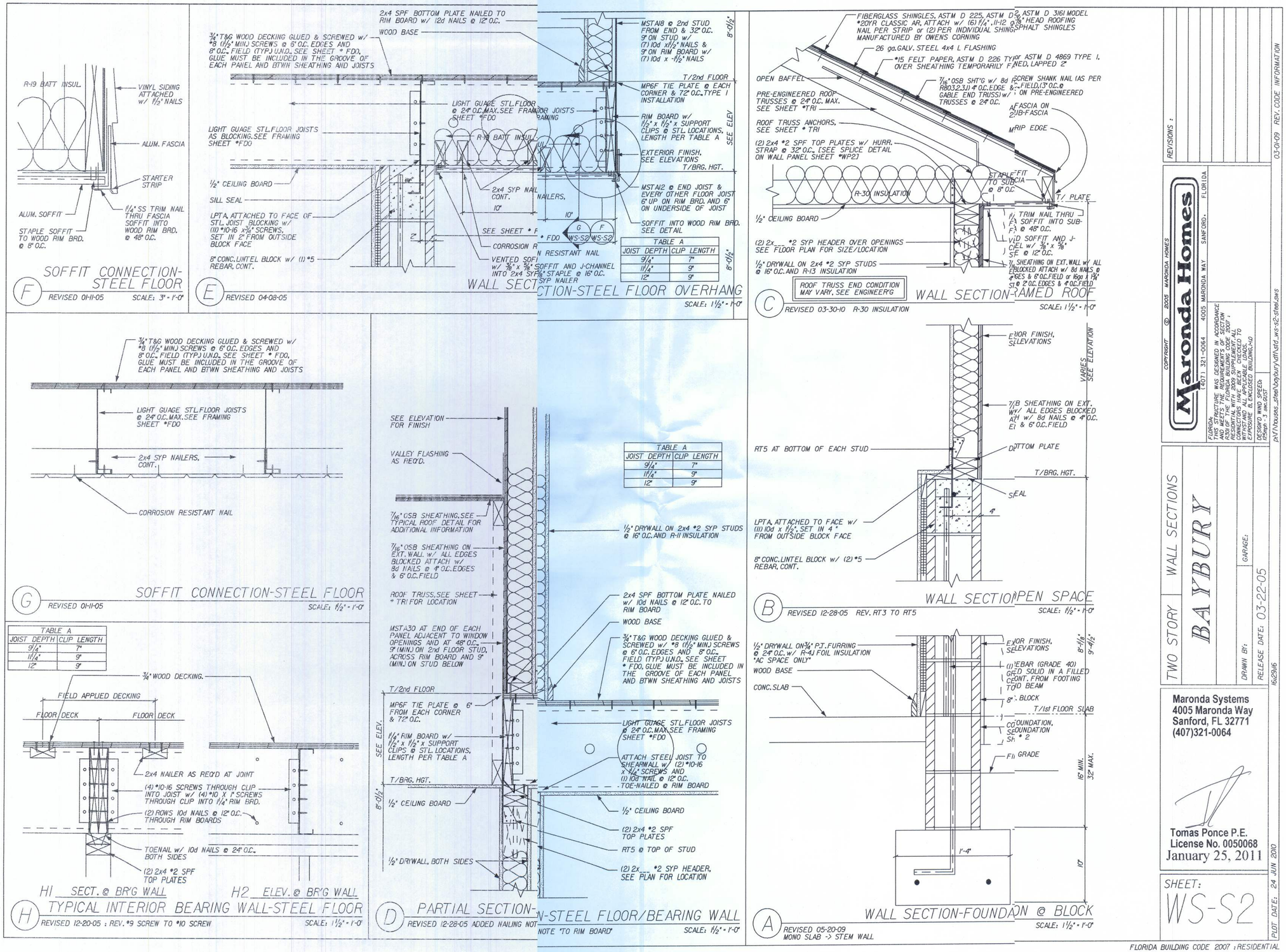

COPYRIGHT © 2005 MARONDA HOMES

Maronda Homes
4005 MARONDA WAY SANFORD, FLORIDA
(407) 321-0064

FLORIDA
THIS ARCHITECTURE WAS DESIGNED IN ACCORDANCE AND MEETS THE REQUIREMENTS OF SECTION R301 OF THE FLORIDA BUILDING CODE 2007. CONNECTORS HAVE BEEN CHECKED TO WITHSTAND UPLIFT FORCES. WALL EXPOSURE B, ENCLOSED BUILDING.

DESIGNED WIND SPEED 120mph - 3 sec.GUST

REVISIONS :

03-01-09 REV. CODE INFORMATION

TWO STORY | WALL SECTIONS

BAYBURY

GARAGE:

DRAWN BY:

RELEASE DATE: 03-22-05

PILOT DATE: 24 JUN 2010

pst\houses_steel\oglury\dft\st2_ws-s2-steel.sws

16d2946

Maronda Systems
4005 Maronda Way
Sanford, FL 32771
(407)321-0064

Tomas Ponce P.E.
License No. 0050068
January 25, 2011

SHEET:
WS-S2

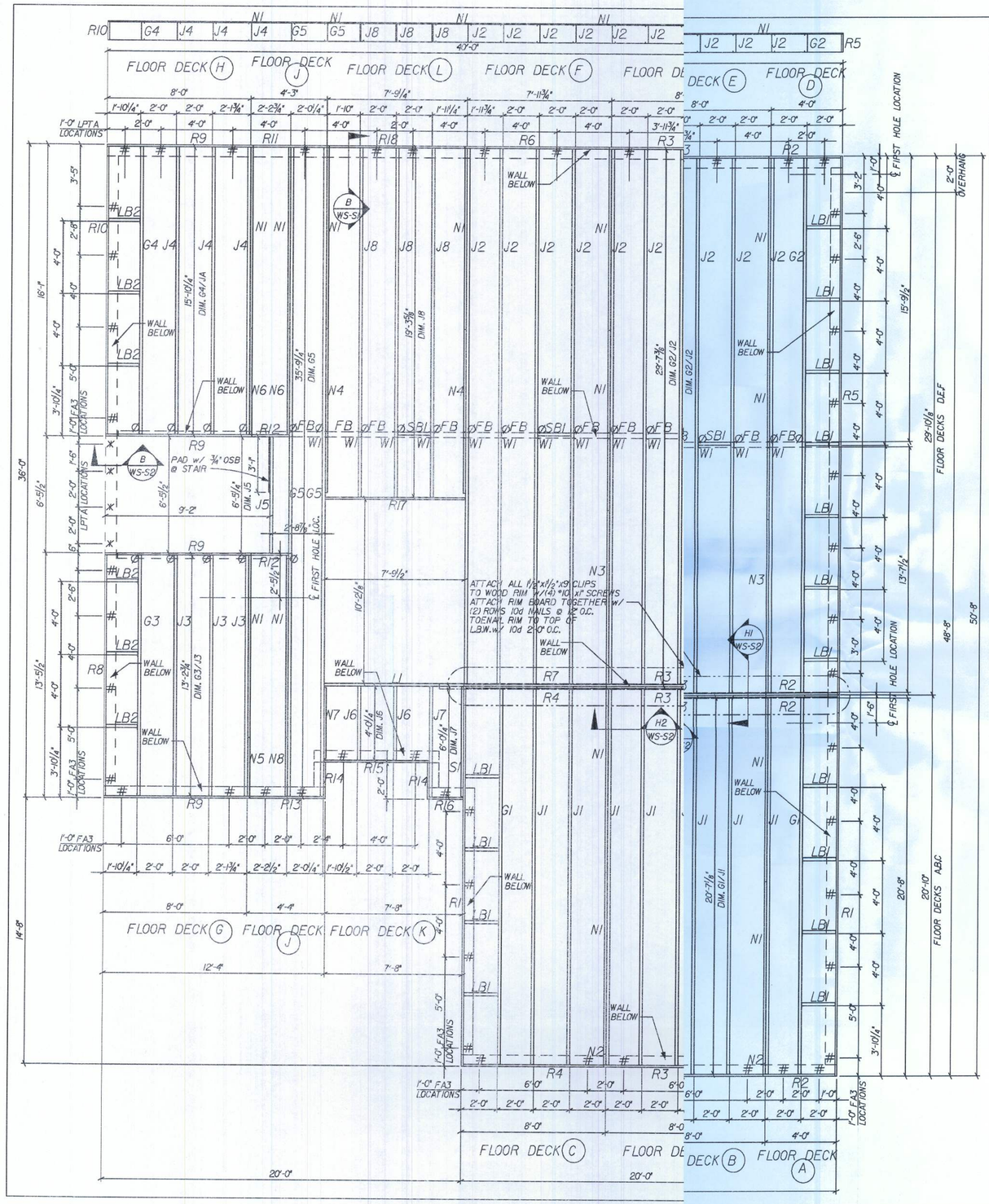

FLOOR FRAMING LEGEND

ITEM	DESCRIPTION
RI-RI8	1¼" RIM BOARD
GI-G5	GIRDER
JI-J8	JOIST
NI-N8	1½"x1½" NAILER
LBI-LB2	LATERAL BLOCKING
SBI	SOLID BLOCKING
WI	WEB STIFFENER
SI	2 x 4 BLOCKING
UI	12" x 1¾" LVL

ERECTION/INSTALLATION NOTES

⚠ WARNING!:

THE ERECTION/INSTALLATION CONTRACTOR SHOULD PROVIDE ADEQUATE RIGGING (CRANE, TAGLINES, SPREADER BARS) FOR SUFFICIENT CONTROL DURING LIFTING AND PLACEMENT TO ASSURE SAFETY TO PERSONNEL AND TO PREVENT DAMAGE TO FLOOR DECK PANELS AND PROPERTY.

NOTE:

AS PER BCSI-B2; TEMPORARY AND PERMANENT BRACING FOR PARALLEL CHORD TRUSSES FROM BCSI 2008 EDITION, STRONGBACKS ARE TO BE INSTALLED ONLY ON THE FLOOR TRUSSES WHERE THE TRUSS ENGINEERING SHEET INDICATES THAT THE L/480 LIVE LOAD DEFLECTION CRITERIA IS NOT MET.

ALL FLOOR DECK PANELS UP TO 30'; KEEP LINE ANGLE AT CRANING POINTS AT 60° OR LESS.

ALL FLOOR DECK PANELS 30' TO 60'; ATTACH FLOOR DECK PANEL TO SPREADER BAR WITH LINES THAT SLOPE INWARD OR "TOE-IN". LINES THAT "TOE-OUT" COULD CAUSE FLOOR DECK PANEL TO BUCKLE.

FLOOR FRAMING NOTES: 12"/14ga.

12" LIGHTGAGE STEEL FLOOR JOISTS (14ga) @ MAX O.C.

1¼" x 8" H WOOD RIM BOARD

MINIMUM SCREW EDGE DISTANCE AND SPACING IS 5/16", ⅞" RESPECTIVELY. THESE DIMENSIONS ARE MEASURED TO THE CENTERLINE OF THE SCREW.

DESIGN LOADS:
LIVE LOAD = 40 psf
DEAD LOAD = 12 psf
TOTAL LOAD = 52 psf

DEFLECTIONS:
LL .50
TL .40

ROOF IS ASSUMED TO BE BEARING ON PERIMETER WALLS ONLY.

FLOOR SHEATHING:
¾" T&G OSB DECKING GLUED AND SCREWED w/ #8 (1.5" MIN) SCREWS, 6" O.C. EDGES & 8" O.C. FIELD, U.N.O. GLUE IS TO BE INCLUDED IN THE GROOVE OF EACH PANEL BETWEEN SHEATHING AND JOISTS.

FLOOR VECTORS:

SEE DETAIL SHEET * WS-S1

Ø TOTAL ATTACHMENT TO BEARING WALL w/ #10-16 x 1¼" SCREWS. SEE DETAIL D1/WS-S1

FB STRONG WOOD FIRE BLOCKING SEE DETAIL F/WS-S1.

x SEE DETAIL SHEET B/WS-S2

& SEE DETAIL SHEET E/WS-S2

REVISED 01-05-05

REVISIONS:
01-06-11 REV. REAR WALL/DEL OVERHANG

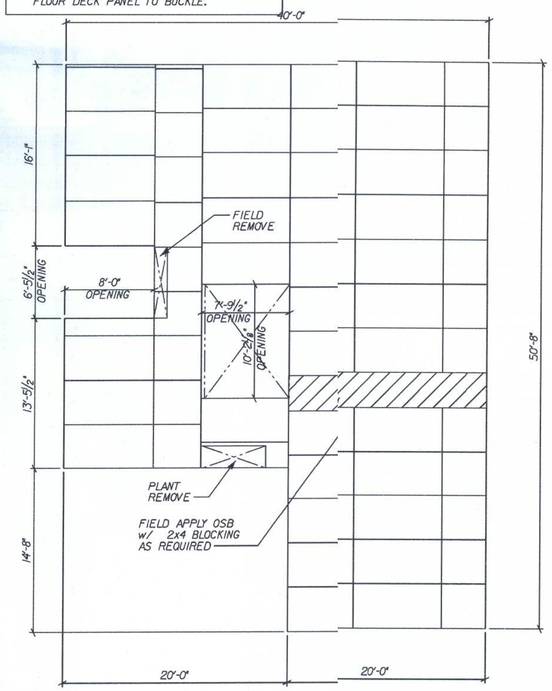

57 SHEETS 8 SHEATHING

SECOND FLOOR SHEATHING LAYOUT

COPYRIGHT © 2005 MARONDA HOMES

Maronda Homes
(407) 321-0064 4005 MARONDA WAY SANFORD, FLORIDA

FLORIDA:
THIS STRUCTURE WAS DESIGNED IN ACCORDANCE WITH THE FLORIDA BUILDING CODE 2007 AND OF THE FLORIDA BUILDING CODE 2007 RESIDENTIAL WITH 2008 SUPPLEMENTS. ALL STRUCTURAL MEMBERS ARE DESIGNED TO WITHSTAND ALL APPLICABLE LOADS. SEE STRUCTURAL DETAILS & SPECS BUILDING.
DESIGN WIND SPEED:
126mph - 3 sec GUST

AMERICANA
FRAMING PLAN
BAYBURY
2 CAR GARAGE
GARAGE: RIGHT
DRAWN BY:
RELEASE DATE: 03-22-05

Maronda Systems
4005 Maronda Way
Sanford, FL 32771
(407)321-0064

Tomas Ponce P.E.
License No. 0050068
January 25, 2011

SHEET:
FD0

03-01-09 REV. CODE INFORMATION

PLOT DATE: 20 JAN 2011

FLORIDA BUILDING CODE 2007 : RESIDENTIAL

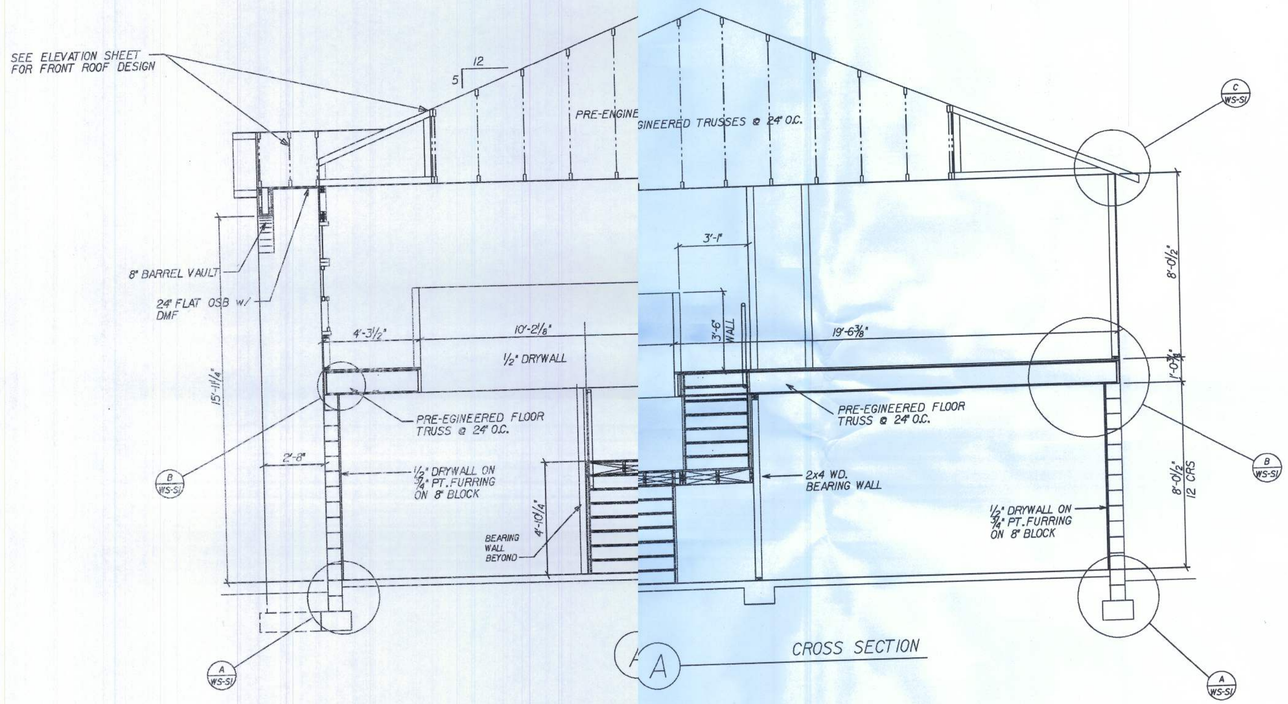

CROSS SECTION

REVISIONS :
01-06-11 REV. REAR WALL/DEL. OVERHANG

03-01-09 REV. CODE INFORMATION

COPYRIGHT © 2005 MARONDA HOMES

Maronda Homes
(407) 321-0064 4005 MARONDA WAY SANFORD, FLORIDA

FLORIDA:
THIS STRUCTURE WAS DESIGNED IN ACCORDANCE WITH THE REQUIREMENTS OF THE FLORIDA BUILDING CODE 2007 : RESIDENTIAL WITH 2009 SUPPLEMENT

AMERICANA

SECTION

BAYBURY

GARAGE: RIGHT

DRAWN BY:

RELEASE DATE: 03-22-05

D:\f\houses_05\baybury\arch_r\grf\sfed\bbr.csu

10:20:25

Maronda Systems
4005 Maronda Way
Sanford, FL 32771
(407)321-0064

Tomas Ponce P.E.
License No. 0050068
January 25, 2011

SHEET:
CSU

PLOT DATE: 20 JAN 2011

FLORIDA BUILDING CODE 2007 : RESIDENTIAL

NAN YA PLASTICS CORP.
PLASTPRO INC.

9 PEACH TREE HILL ROAD
LIVINGSTON, NEW JERSEY 07039

DISTINCTION SERIES OPAQUE FIBERGLASS DOOR W/ SIDELITES LIP LITE SCREW FRAME INSWING / OUTSWING "IMPACT"

GENERAL NOTES

1. This product has been evaluated and is in compliance with the 2007 Florida Building Code (FBC) structural requirements excluding the "High Velocity Hurricane Zone" (HVHZ).
2. Product anchors shall be as listed and spaced as shown on details. Anchor embedment to base material shall be beyond wall dressing or stucco.
3. When used in areas requiring wind borne debris protection this product complies with Section 1609.1.2 of the FBC and does not require an impact resistant covering. This product meets missile level "D" and includes Wind Zone 4 as defined in ASTM E1996. The sidelite must be protected with an impact resistant covering that complies with section 1609.1.2.
4. For 2x stud framing construction, anchoring of these units shall be the same as that shown for 2x buck masonry construction.
5. Site conditions that deviate from the details of this drawing require further engineering analysis by a licensed engineer or registered architect.

TABLE OF CONTENTS

SHEET #	DESCRIPTION
1	Typical elevation, design pressures, & general notes
2	Door panel details
3	Sidelite panel details
4	Horizontal cross sections
5	Vertical cross sections
6	Vertical cross sections
7	Buck and frame anchoring - 2X buck masonry construction
8	Frame anchoring - 1X buck masonry construction
9	Bill of materials, glazing detail & components

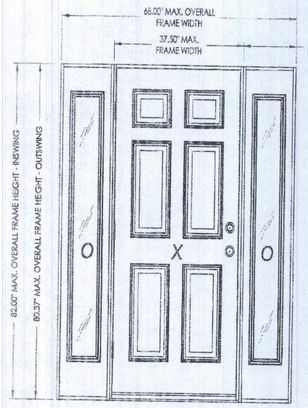

SWING	OVERALL FRAME DIMENSION	SIDELITE O.L.O. DIMENSION	GLASS TYPE	DESIGN PRESSURE (PSF)	
				POSITIVE	NEGATIVE
INSWING	68.00" x 82.00"	7.00" x 63.00"	G1	+50.0	-50.0
OUTSWING	68.00" x 80.37"	7.00" x 63.00"			

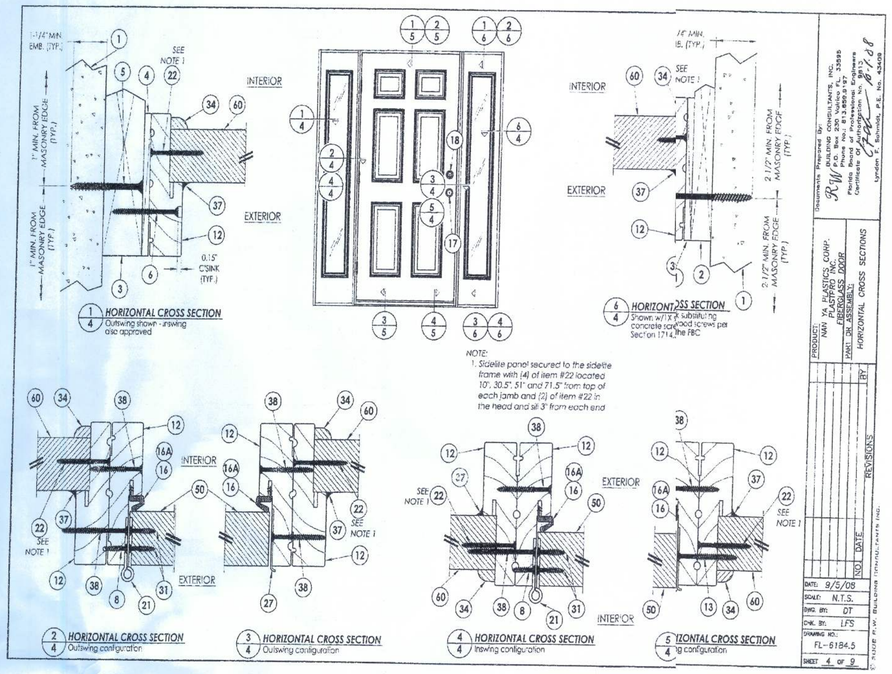

FLORIDA PRODUCT APPROVAL # 6184.5

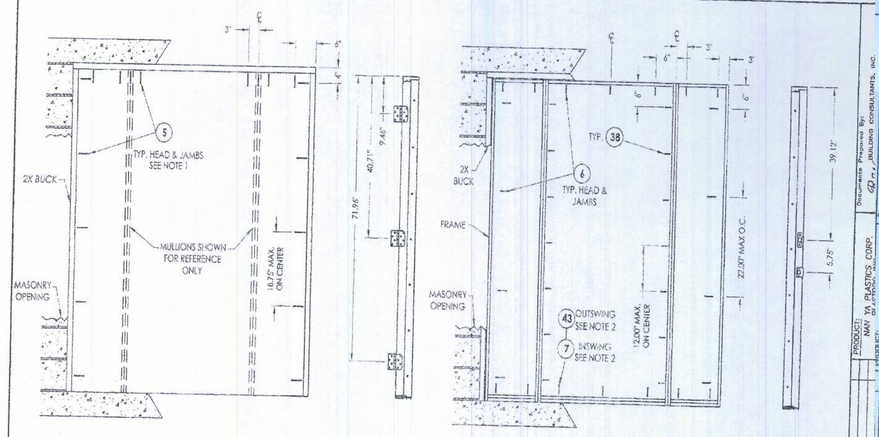

NOTES:

1. 1/4" Bico concrete screws anchoring 2x buck require a minimum 1" clearance to masonry edges, a 1-1/4" minimum embedment and a minimum 4" clearance to adjacent concrete screws. Substitution of equal concrete screws from a different supplier may have different edge distance and center distance requirements. Concrete screw locations at the corners and at mullion locations may be adjusted to maintain the minimum edge distance to mortar joints. If concrete screw locations noted as "MAX. ON CENTER" must be adjusted to maintain the minimum edge distance to mortar joints, additional concrete screws may be required to ensure the maximum on center dimension is not exceeded.
2. 1/4" ITW concrete screws anchoring frame and/or sill require a minimum 2-1/2" clearance to masonry edges, a 1-1/4" minimum embedment and a minimum 3" clearance to adjacent concrete screws. Substitution of equal concrete screws from a different supplier may have different edge distance and center distance requirements. Concrete screw locations at the corners and at mullion locations may be adjusted to maintain the minimum edge distance to mortar joints. If concrete screw locations noted as "MAX. ON CENTER" must be adjusted to maintain the minimum edge distance to mortar joints, additional concrete screws may be required to ensure the maximum on center dimension is not exceeded.

BILL OF MATERIALS

ITEM	DESCRIPTION	MATERIAL
1	MASONRY - 3,192 PSI MIN. CONCRETE CONFORMING TO ACI 301 OR HOLLOW BLOCK CONFORMING TO ASTM C90	CONCRETE
2	1X BUCK SG >= 0.55	WOOD
3	2X BUCK SG >= 0.55	WOOD
4	1/4" MAX. SHIM SPACE	
5	1/4" X 2-3/4" PFH BLCO CONCRETE SCREW	STEEL
6	#10 x 2-1/2" PFH WOOD SCREW	STEEL
7	1/4" x 2-1/4" PFH ITW CONCRETE SCREW	STEEL
8	#9 x 3/4" PFH WOOD SCREW	STEEL
9	DOOR SKIN (MIN. 0.075" THICK)	FIBERGLASS
10	INSWING VINYL DOOR BOTTOM SWEEP BY ENDURA	VINYL
10A	VINYL DOOR BOTTOM SWEEP #36DB BY HOLM IND.	VINYL
11	REINFORCEMENT WOOD FOR LOCK	WOOD
12	FINGER JOINTED PINE FRAME HEAD & HINGE JAMBS	WOOD
13	#9 x 2-1/4" PFH WOOD SCREW	STEEL
14	BOTTOM RAIL	CELLULAR PVC
15	INSWING ADJUSTABLE THRESHOLD BY ENDURA	ALUM. / WOOD
15A	INSWING ADJUSTABLE ALUMINUM THRESHOLD BY DLP	ALUM. / WOOD
16	FORCE 5 WEATHER STRIPPING BY ENDURA	FOAM
16A	COMPRESSION WEATHER STRIP QLON 650 BY SCHLEGEL	FOAM
17	KWIKSET KEYED ENTRY GRADE 2	STEEL
18	KWIKSET DEADBOLT GRADE 2	STEEL
19	CONTINUOUS SIDELITE STILE REINF.	WOOD
20	POLYURETHANE FOAM BY NANYA	POLYURETHANE
21	4" x 4" BUTT HINGE	STEEL
22	#8 x 2" PFH WOOD SCREW	STEEL
23	GLAZING SPACER	ALUM.
24	HINGE & LATCH STILE	CELLULAR PVC
25	TOP RAIL	CELLULAR PVC
26	SIDELITE STILE	CELLULAR PVC
27	STRIKE PLATE	STEEL
28	OUTSWING BUMP THRESHOLD	ALUM. / WOOD
29	DEADBOLT STRIKE PLATE	STEEL
30	LIP LITE ODL/WESTRIX REFLECTIONS HP	POLYPROPYLENE
31	#9 x 1" PPH WOOD SCREW	STEEL
32	1/4" x 3-3/4" PFH ITW CONCRETE SCREW	STEEL
33	SIDELITE TOP & BOTTOM RAIL	CELLULAR PVC
34	SHOE MOULD 5/8" x 3/8"	WOOD
35	GLAZING COMPOUND	SILCONE
36	#8 x 1-1/2" PFH LITE FRAME SCREW	STEEL
37	SEALANT	SILCONE
38	#9 x 2" PFH WOOD SCREW	STEEL
39	SIDELITE SPACER	PVC
40	HINGE & LATCH STILE REINFORCEMENT	LVL
43	1/4" x 2-3/4" PFH ITW CONCRETE SCREW	STEEL
50	DOOR PANEL - SEE DOOR PANEL DETAIL SHEET FOR CONSTRUCTION DETAILS	
60	SIDELITE PANEL - SEE DOOR PANEL DETAIL SHEET 3	

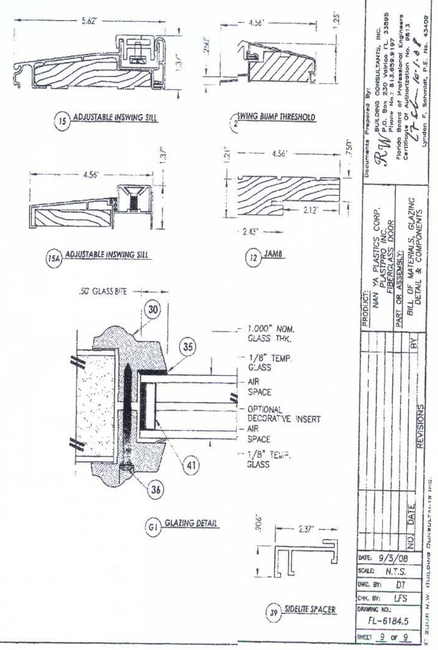

REVISIONS :
02-23-2009 UPDATED FOR 2007 CODES
06-16-09 REVISED FOR 2007 CODES

Maronda Homes
(407) 321-0064 4005 MARONDA WAY SANFORD, FLORIDA

COPYRIGHT © 2005 MARONDA HOMES

FIBERGLASS EXTERIOR DOORS
IN SWING / OUT SWING DOOR
WITH (TWO) SIDELITES
RELEASE DATE: 09/05/08

SHEET:
ED-2

FLORIDA BUILDING CODE 2007 : RESIDENTIAL

PRODUCT APPROVAL INFORMATION SHEET FOR FLORIDA

Project Name:_____ **Permit #**_____

Project Address:_____

As required by Florida Statute 553.842 and Florida Administrative Code 9B-72, please provide the information and product approval val number(s) for the building components listed below as applicable to the building construction project for the permit number listed above. You should ld contact your product supplier if you do not know the product approval number for any of the applicable listed products. Information regarding statewide de product approval may be obtained at: www.floridabuilding.org. REVISED 12-20-2010

Category/Subcategory	Manufacturer	Product Description	Limitation of Use	State 200 2007#	Design Pressures
A. EXTERIOR DOORS					
1. Swinging	Plastpro Inc. / Nanya Plastics Corp.	Fiberglass Dr Single	Evaluated for use in locations adhering to the Florida Building Code and where pressure requirements as determined by ACSE 7 Minimum Design Loads for Building and Other Structures.	FL 6184. 84.1	+65 / -70
		Fiberglass Dr w/ Sidelite		FL 6184. 84.3	+50 / -50
		Fiberglass Dr w/ Dbl Sidelites		FL 6184. 84.5	+50 / -50
		Fiberglass Dr Single Glazed		FL 6729. 29.1	+50 / -50
		Fiberglass DBL Fr Dr Glazed		FL 6729.2 29.4	+50 / -50
2. Sliding	Simonton Windows Florida Extruders	Sliding Glass Doors	500 72X80 SGD-R45 Milestone 1000 SGD	FL 5979.1 79.1 FL 8409.2 09.2	+50 / -50 +45 / -45
3. Sectional					
4. Roll up	Wayne Dalton Corp.	Garage Doors 130 10'-16' 9100 / 5120 8' – 9' Garage Doors 140 10'-16' 9100 / 5120 8' - 9'	As indicated in evaluation report and installation drawings. Not to be used in HVHZ.	FL 9174.3 74.3 FL 9174.4 74.1 FL 9174.4 74.6 FL 9174.5 74.5	+25.9 /-28.8 +26.9 /-30.8 +39.2 /-43.7 +43.2 /-49.6
B. WINDOWS					
1. Single hung	Florida Extruders	Milestone Series 1000	53" x 84" Max Windows have not been evaluated for use in High Velocity Hurricane Zones.	FL 9262 52	+45 / -45

Category/Subcategory	Manufacturer	Product Description	Limitation of Use	State 200 2007#	Design Pressures
2. Horizontal slider	Florida Extruders	Milestone Series 1000	74"x72" XO/OX Max Windows have not been evaluated for use in High Velocity Hurricane Zones.	FL 9236 36	+45 / -45
5. Fixed	Florida Extruders	Milestone Series 1000	73"x37" Max Windows have not been evaluated for use in High Velocity Hurricane Zones.	FL 9242 242	+45 / -45
7. Pass-through					
8. Projected					
9. Mullion	Florida Extruders	Milestone Tube Mull	Evaluated for use in locations adhering to the Florida Building Code and where pressure requirements as determined by ACSE 7 Minimum Design Loads for Building and Other Structures.	FL 3136- 36–R3	60 PSF
10. Wind breaker					
11. Dual action					
12. Other					
C. PANEL WALL					
1. Siding	James Hardie Building Products, Inc.	HardiePlank Lap Siding HardieShingle Siding (Cemplank fiber-cement siding)	Approved for use in HVHZ and outside HVAZ. Impact resistant	FL 1323 236 FL 1319 192	N/A N/A
	CertainTeed Corp. siding Products	CertainTeed Vinyl Siding	Not approved for use in HVHZ. Used for exterior cladding only.	FL 1573 73	+N/A/-91
2. Soffit	Alsco Metal Corp	Quad 4 Aluminum Soffit Systems	For use as soffit only. Not for use in HVHZ.	FL 4459- 59-R1	62.0 PSF
D. ROOFING PRODUCTS					
1. Asphalt shingles	Owens Corning	Asphalt Shingle	This Approval not for use in the HVHZ. All FBC sections that apply to counties except Broward and Miami-Dade Must be followed.	FL 1067 674-R1	N/A
	Certain Teed Corp.	Asphalt Shingle		FL 5444 444-R1	N/A

Category/Subcategory	Manufacturer	Product Description	Limitation of Use	State 2007#	Design Pressures
2. Underlayments	Black Warrior Roofing	15# Felt Paper Underlayment	For use under discontinuous roofing s with HVHZ. slopes greater than 2:12. Not to be u	FL 2077	N/A
4. Nonstructural metal roof					
5. Built-up roofing					
6. Modified bitumen	Polyglass USA	Two layer torch down	The max design pressure for lected assembly shall meet or exceed Zone 1 design pressure determined in ordance with FBC chapter 16.	FL 1654-R4	+N/A /-622.5
7. Single ply roofing					
8. Roofing tiles					
9. Roofing insulation					
11. Wood shingles/shakes					
12. Roofing slate					
13. Liquid applied roofing					
14. Cement-adhesive coats					
15. Roof tile adhesive					
16. Spray applied polyurethane roof					
17. Roof vents	Owens Corning Lamanco	Ridge Vent Off Ridge Vent	This Approval not for use i HVHZ. All FBC sections pply to counties except Broward Miami-Dade Must be follo	FL 10758 FL 3792-R3	N/A N/A
E. SHUTTERS					
1. Storm Panels	ASI Building Products	.018" Galvanized Steel Storm Panels	This product may only be led on concrete, hollow concrete or wood substrates. This prod NOT suitable for installation in high Velocity Hurricane Zone o Wind Speed > 140.	FL 7989-R2	+70 / -70
	Atrium Companies Inc..	24 GA Galv. Steel Panel		FL 12540.2	N/A
	Alufab Hurricane Shutters Inc.	24 & 22 GA Steel Panel		FL 4804	N/A
	KD Manufacturing	KD STORM PANEL		FL 2773	N/A

Category/Subcategory	Manufacturer	Product Description	Limitation of Use	State 2007#	Design Pressures
F. STRUCTURAL COMPONENTS					
Wood connector/anchor	United Steel Products	Anchors, Hangers Etc. Structural Components Wood Connectors	Subject to limitation and ation instructions specified in NC 0105.05.	565-R3,567-R3, 568-R2,569-R3, 570-R2,571-R2, 574-R2,576-R3, 578-R2,815-R1, 816-R1,817-R1, 819-R1,820-R2, 821-R1,822-R1, 859-R4,1247-R1 2033-R2, 4928-R1, 5631-R1, 9835-R1, 10739,11664, 11748, 11838, 11910	
2. Truss plates	Mitek Industries Inc.	Truss Connectors	No Limitation of Use.	FL 2197 R1	N/A
3. Engineered lumber					
4. Railing					
5. Coolers-freezers					
6. Concrete admixtures					
7. Material					
8. Insulation forms					
9. Plastics					
10. Deck-roof					
11. Wall					
13. Other	Powers Steel Inc.	PSbox8 PSbox8(5-5/8)	Lintels shall not exceed the able design load and spans. The li shall not be used in a fire resi rated assembly. A proper barr required when using corrosive products in contact with steel. Not for use in HVHZ Miami Broward counties at this time.	6264-R1	N/A
G. SKYLIGHTS					
1. Skylight					
2. Other					
H. NEW EXTERIOR ENVELOPE PRODUCTS					
1.					
2.					

In addition to completing the above list of manufacturers, product description and State approval number for the products used on this project, it is the Contractor's or Authorized Agent's responsibility to have a legible copy of each manufacturer's printed instructions along with the list above, on the job site available to the inspector.
The products listed below did not demonstrate product approval at time of plan review. I understand that before products can be inspected, they must be submitted for review for code compliance and approved by a Plans Examiner. This form will be revised to include each new product in the categories listed above and will be highlighted to indicate the new products and required information.

Authorized Project Agent:_____
(Contractor or Design Professional) (Print Name) (Signature)

Company Name:_____

Mailing Address:_____

City:_____ State:_____ Zip Code:_____

Telephone Number: ( )_____ Fax Number: ( )_____

Cell Phone Number: ( )_____ E-mail Address:_____

REVISIONS :
10-29-07 UPDATE LISTS
01-21-08 UPDATE ROLL UP DOORS
08-14-08 ADDED POWERS STEEL LINTELS
09-16-08 ADDED MANUF. ENGRS NOTE
02-23-2009 UPDATED FOR 2007 CODES
7-20-09 UPDATED SHUTTER INFO
3-3-10 revised for Hardie Siding
12-21-10 ADDED CERTAINTEED VINYL SIDING

COPYRIGHT © 2005 MARONDA HOMES

Maronda Homes
(407) 321-0064 4005 MARONDA WAY SANFORD, FLORIDA

FLORIDA
THIS STRUCTURE WAS DESIGNED IN ACCORDANCE AND MEETS THE REQUIREMENTS OF SECTION R301.2(4) OF THE FLORIDA BUILDING CODE, RESIDENTIAL 2007 EDITION. ALL ROOF & WALL CONNECTORS HAVE BEEN CHECKED TO MEET THE REQUIREMENTS FOR WIND EXPOSURE & ENCLOSED BUILDING.

PRODUCT APPROVAL

DRAWN BY: GARAGE:

RELEASE DATE: MARCH 1, 2009

pkf\fpr06_dpr0vds.dgn

1447-49

SHEET:

FLORIDA BUILDING CODE 2007 : RESIDENTIAL

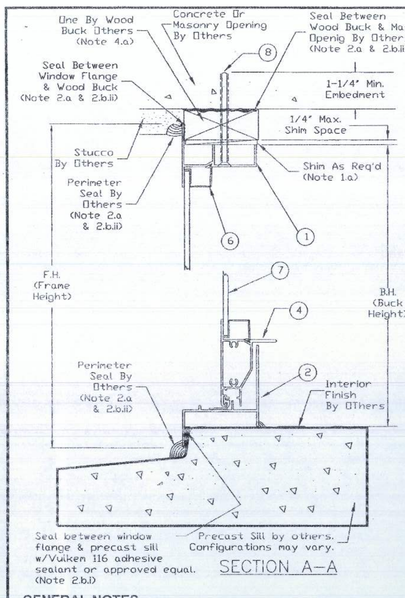

SECTION A–A

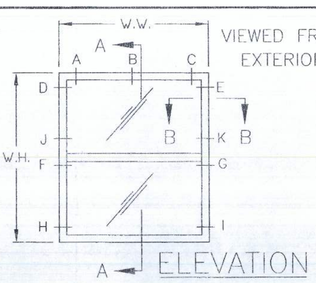

ELEVATION

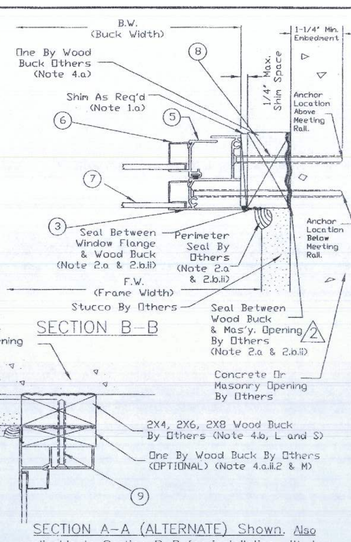

SECTION B–B

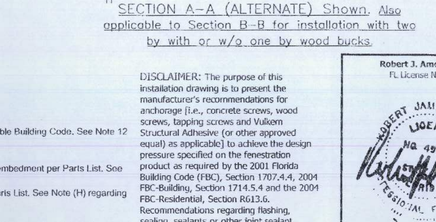

SECTION A–A (ALTERNATE) Shown. Also applicable to Section B–B for installation with two by with or w/o one by wood bucks.

PARTS LIST

1 Head - Flange Frame
2 Sill - Flange Frame
3 Jamb - Flange Frame
4 Lift Rail - Sash
5 Jamb - Sash
6 Glazing Bead
7 Glazing - See Note (B) and (C)
8 3/16" Dia. Flat Head Concrete Screw with minimum working load in shear of 180 lbs at 1 1/4" embedment. See Note (I) on Sheet 2 & Note 7 on Drawing FLEX20100.
9 #10 Flate Head Wood or Tapping Screw with a minimum embedment of 1-3/8" into "Structural Two By Buck or Framing". See Note (L) on Sheet 2 and Note 8 on Drawing FLEX20100.
10 #8 Flat Head Wood or Tapping Screw with a minimum embedment of 5/8" into the "One By Wood Buck". See Note (K) on Sheet 2 and Note 8 on Drawing FLEX20100.

GENERAL NOTES

(1 to 15) See General Notes Drawing FLEX20100, Sheet 1 & 2.
(A) Milestone Series 1000 Single Hung Aluminum Window is shown. Also applicable to Milestone Series 1500 and 2000 Single Hung Aluminum Windows.
(B) Drawing applicable to Non-Impact Resistant glazed windows.
(C) Production Glazing may differ from that tested as allowed by ANSI/AAMA/NWWDA 101/I.S. 2, 101/I.S. 2/NAFS or AAMA/WDMA/CSA 101/I.S. 2/A440 and applicable Building Code. See Note 12 and 13 on Drawing FLEX 20100 for further details.
(D) For Fastener Location & Quantities see Sheet 2 of this drawing. See Note (H) regarding deviations.
(E) Concrete screw edge distance measured from edge of concrete/masonry/block to centerline of concrete screw must meet or exceed 2 1/4". Minimum size and embedment per Parts List. See Note (H) regarding deviations.
(F) Wood screw edge distance measured from edge of wood to centerline of wood or tapping screw must meet or exceed 1". Minimum size and embedment per Parts List. See Note (H) regarding deviations.
(G) Not used.
(H) Any deviation less than the minimum requirements stated must be approved by the manufacturer or engineered by "other" Design Professional in accordance with the applicable Building Code and Product Approval.

DISCLAIMER: The purpose of this installation drawing is to present the manufacturer's recommendations for anchorage (i.e., concrete screws, wood screws, tapping screws and Vulkem Structural Adhesive (or other approved equal) as applicable) to achieve the design pressure specified on the fenestration product as required by the 2001 Florida Building Code (FBC), Section 1707.4.4, 2004 FBC-Building, Section 1714.5.4 and the 2004 FBC-Residential, Section R613.6. Recommendations regarding flashing, sealing, sealants or other joint sealant practices does not constitute a warranty either expressed or implied.

Robert J. Amaruso, P.E.
FL License No. 49752

ROBERT JAMES AMARUSO LICENSE No. 49752 STATE OF FLORIDA PROFESSIONAL ENGINEER
3/3/07

Drawing No. FLEX21110
Sheet 1 of 2

Florida Extruders Int'l., Inc.
2540 Jewett Lane - Sanford, FL 32771
407-323-3300 - 407-322-5507 (fax)
www.floridaextruders.com
Florida COA No. 9235

TITLE
Milestone Series 1000, 1500 & 2000 Non-Impact Resistant Aluminum Flange Frame Single Hung Window Installation Drawing for Masonry Substrate with Concrete Screws

REVISIONS			
No.	Date	By	Description
0	12/27/06	RJA	Supersedes FLEX0015
1	1/17/07	RJA	Revised Anchorage.
2	3/02/07	RJA	General Corrections.

Date: 3/02/07
Scale: NTS
Drawn By: RJA
Checked By: JH

FASTENER LOCATiON TABLE (see Elevation View)

Size Code	Buck Width	Buck Height	Concrete Screw Location Head	Concrete Screw Location Jambs
12	18 1/8	25	A, C	D, E, F, G, H, I
13	18 1/8	37 3/8	A, C	D, E, F, G, H, I
14	18 1/8	49 5/8	A, C	D, E, F, G, H, I
145	18 1/8	55 1/4	A, C	D, E, F, G, H, I
15	18 1/8	62	A, C	D, E, F, G, H, I
16	18 1/8	71	A, C	D, E, F, G, H, I, J, K
17	18 1/8	83	A, C	D, E, F, G, H, I, J, K
1H2	25 1/2	25	A, C	D, E, F, G, H, I
1H3	25 1/2	37 3/8	A, C	D, E, F, G, H, I
1H4	25 1/2	49 5/8	A, C	D, E, F, G, H, I
1H45	25 1/2	55 1/4	A, C	D, E, F, G, H, I
1H5	25 1/2	62	A, C	D, E, F, G, H, I
1H6	25 1/2	71	A, C	D, E, F, G, H, I, J, K
1H7	25 1/2	83	A, C	D, E, F, G, H, I, J, K
3H2	29 1/2	25	A, C	D, E, F, G, H, I
3H3	29 1/2	37 3/8	A, C	D, E, F, G, H, I
3H4	29 1/2	49 5/8	A, C	D, E, F, G, H, I
3H45	29 1/2	55 1/4	A, C	D, E, F, G, H, I
3H5	29 1/2	62	A, C	D, E, F, G, H, I
3H6	29 1/2	71	A, C	D, E, F, G, H, I, J, K
3H7	29 1/2	83	A, C	D, E, F, G, H, I, J, K
22	36	25	A, C	D, E, F, G, H, I
23	36	37 3/8	A, C	D, E, F, G, H, I
24	36	49 5/8	A, C	D, E, F, G, H, I
245	36	55 1/4	A, C	D, E, F, G, H, I
25	36	62	A, C	D, E, F, G, H, I
26	36	71	A, C	D, E, F, G, H, I, J, K
27	36	83	A, C	D, E, F, G, H, I, J, K
482	47	25	A, B, C	D, E, F, G, H, I
483	47	37 3/8	A, B, C	D, E, F, G, H, I
484	47	49 5/8	A, B, C	D, E, F, G, H, I
4845	47	55 1/4	A, B, C	D, E, F, G, H, I
485	47	62	A, B, C	D, E, F, G, H, I
486	47	71	A, B, C	D, E, F, G, H, I, J, K
32	52 1/8	25	A, B, C	D, E, F, G, H, I
33	52 1/8	37 3/8	A, B, C	D, E, F, G, H, I
34	52 1/8	49 5/8	A, B, C	D, E, F, G, H, I
345	52 1/8	55 1/4	A, B, C	D, E, F, G, H, I
35	52 1/8	62	A, B, C	D, E, F, G, H, I
36	52 1/8	71	A, B, C	D, E, F, G, H, I, J, K
37 (Note 1)	52 1/8	83	A, B, C	D, E, F, G, H, I, J, K

Notes 1) Only applicable to Series 2000.

FASTENER INSTALLATION INSTRUCTIONS - FLEX21110

3/16" DIA. CONCRETE SCREW WITH NON-STRUCTURAL ONE BY WOOD BUCK:

(I) Where window is installed in an opening with a non-structural one by wood buck for the head and jambs and masonry or concrete sill, installation is as follows:

- At the head and jambs, use a 3/16" diameter concrete screw of sufficient length to achieve minimum embedment of 1-1/4" into masonry or concretes. See "Parts List" on Sheet 1 of this drawing for concrete screw size, embedment and load requirements. See FLEX20100, Note 7 for additional concrete screw requirements.
- At the sill, apply a Structural Adhesive Sealant meeting the requirements of Note 2.b.i on FLEX20100 for the full length of the Sill.

(J) See fastener location table this sheet for concrete screw locations and any additional installation requirements.
(K) Any remaining factory applied installation fastener hole in the head at location "B" not used for concrete screw installation per the fastener location table shall be filled with a #8 wood screws of sufficient length to provide min. 5/8" embedment into wood buck. See "Parts List" on Sheet 1 of this drawing for wood screw size and embedment requirements. See FLEX20100, Note 8 for additional wood screw requirements.

#10 WOOD SCREW WITH STRUCTURAL TWO BY WOOD BUCK AND OPTIONAL ONE BY WOOD BUCK (SECTION A-A ALTERNATE ILLUSTRATES THIS OPTION, SIMILAR FOR SECTION B-B):

(L) Where window is installed in an opening with a structural two by wood buck for the head and jambs and a masonry or concrete sill, installation is as follows:

- At the head and jambs, use #10 wood screws of sufficient length to achieve 1-3/8" min. embedment into the two by wood buck. See "Parts List" on Sheet 1 of this drawing for wood screw size and embedment. See FLEX20100, Note 8 for additional wood screw requirements.
- At the sill, apply a Structural Adhesive Sealant meeting the requirements of Note 2.b.i on FLEX20100 for the full length of the Sill.

(M) If a two by and one by wood buck are used together (See Section A-A Alternate, similar for Section B-B), then #10 wood screws of sufficient length to achieve 1-3/8" min. embedment into the two by wood buck will be used and the one by wood buck will be secured to the two by wood buck as required in Note 4.a.ii.2 on drawing FLEX20100.
(N) #10 wood screws shall be installed at all factory applied installation fastener hole locations.
(O) Wood screws shall not be used to fasten assembly into the end grain of wood.

VIEWED FROM EXTERIOR (FASTENER LOCATIONS)

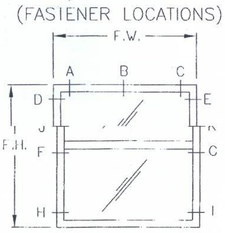

ELEVATION

DESIGN PRESSURE RATING & FBC CODE COMPLIANCE

(P) If exact window size is not listed in fastener installation table, use fastener quantity listed for next larger size.
(Q) Installations depicted in these instructions acceptable for design pressures to 70 PSF for the window sizes shown in the table. Design Pressures (D.P.) are positive and negative. Overall window assembly design pressure may be less than that shown in the fastener location table and shall be determined in accordance with Note 13 of FLEX20100.
(R) Production Glazing may differ from that tested as allowed by ANSI/AAMA/NWWDA 101/I.S. 2, 101/I.S. 2/NAFS or AAMA/WDMA/CSA 101/I.S. 2/A440 and applicable Building Code. See Note 12 and 13 on Drawing FLEX 20100 for further details.
(S) Anchors shall be fastened to the wood buck or other structural substrate per the FBC and the engineer of record's details as applicable.
(T) See FLEX20100, Notes 10 to 15 for additional FBC Code Compliance.

Drawing No. FLEX21110
Sheet 2 of 2

Florida Extruders Int'l., Inc.
2540 Jewett Lane - Sanford, FL 32771
407-323-3300 - 407-322-5507 (fax)
www.floridaextruders.com
Florida COA No. 9235

TITLE
Milestone Series 1000, 1500 & 2000 Non-Impact Resistant Aluminum Flange Frame Single Hung Window Installation Drawing for Masonry Substrate with Concrete Screws

REVISIONS			
No.	Date	By	Description
0	12/27/06	RJA	Supersedes FLEX0015
1	1/17/07	RJA	Revised Anchorage.
2	3/02/07	RJA	General Corrections.

Date: 3/02/07
Scale: NTS
Drawn By: RJA
Checked By: JH

Florida Product Approval # FL9262

SINGLE HING

SHEET: WINb

FLORIDA EXTRUDERS
WINDOWS IN BLOCK
1 of 6
RELEASE DATE: 09/03/08

COPYRIGHT © 2002 MARONDA HOMES

Maronda Homes
(407) 321-0064 4005 MARONDA WAY SANFORD, FLORIDA

REVISIONS :
2-16-09 Updated to Code.

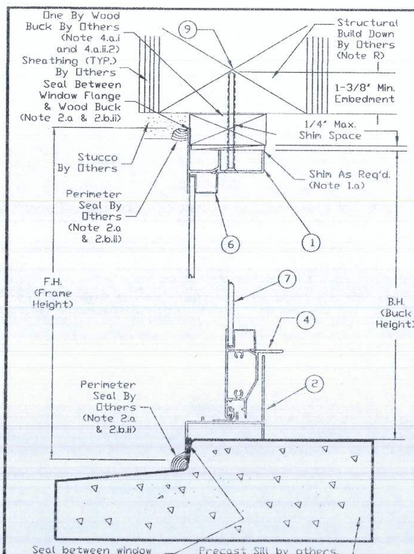

SECTION A-A

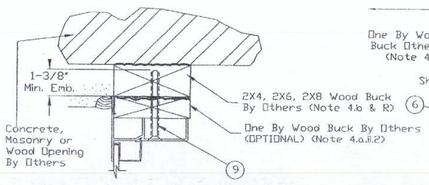

SECTION A-A (ALTERNATE) Shown. Also applicable to Section B-B for installation with two by with or w/o one by wood bucks.

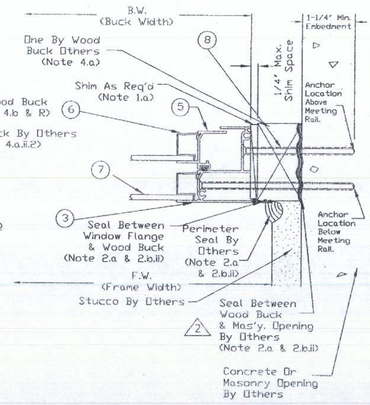

PARTS LIST

1. Head - Flange Frame
2. Sill - Flange Frame
3. Jamb - Flange Frame
4. Lift Rail - Sash
5. Jamb - Sash
6. Glazing Bead
7. Glazing - See Note (B) and (C)
8. 3/16" Dia. Flat Head Concrete Screw with minimum work load in shear of 180 lbs at 1 1/4" embedment. See Note (I) on this drawing and Note 7 on Drawing FLEX20100.
9. #10 Flat Head Wood or Tapping Screw with a minimum embedment of 1-3/8" into "Structural Two By Buck or Framing". See Note (K) on this drawing and Note 8 on Drawing FLEX20100. △2

DISCLAIMER: The purpose of this installation drawing is to present the manufacturer's recommendations for anchorage (i.e., concrete screws, wood screws, tapping screws and Vulkem Structural Adhesive (or other approved equal) as applicable) to achieve the design pressure specified on the fenestration product as required by the 2001 Florida Building Code (FBC), Section 1707.4.4, 2004 FBC-Building, Section 1714.5.4 and the 2004 FBC-Residential, Section R613.6. Recommendations regarding flashing, sealing, sealants or other joint sealant practices does not constitute a warranty either expressed or implied.

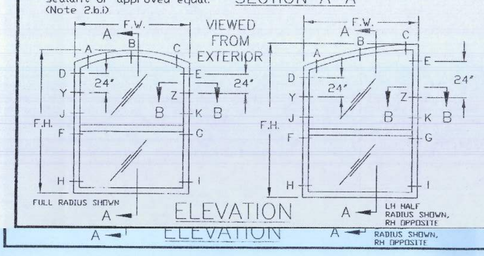

ELEVATION

ELEVATION

GENERAL NOTES

(1 to 15) See General Notes Drawing FLEX20100, Sheet 1 & 2.
(A) Milestone Series 1000 Single Hung Radius Head Aluminum Window is shown. Also applicable to Milestone Series 1500 and 2000 Single Hung Radius Head Aluminum Windows.
(B) Drawing applicable to Non-Impact Resistant glazed windows.
(C) Production Glazing may differ from that tested as allowed by ANSI/AAMA/NWWDA 101/I.S. 2, 101/I.S. 2/NAFS or AAMA/WDMA/CSA 101/I.S. 2/A440and applicable Building Code. See Note 12 and 13 on Drawing FLEX 20100 for further details.
(D) For Fastener Location & Quantities see Sheet 1 & 2 of this drawing respectively. See Note (H) regarding deviations.
(E) Concrete screw edge distance measured from edge of concrete/masonry/block to centerline of concrete screw must meet or exceed 2 1/4". Minimum size and embedment per Parts List. See Note (H) regarding deviations.
(F) Wood or tapping screw edge distance measured from edge of wood to centerline of wood or tapping screw must meet or exceed 1". Minimum size and embedment per Parts List. See Note (H) regarding deviations.
(G) Not used.
(H) Any deviation less than the minimum requirements stated must be approved by the manufacturer or engineered by "other" Design Professional in accordance with the applicable Building Code and Product Approval.

Florida Extruders Int'l., Inc.
2540 Jewett Lane - Sanford, FL 32771
407-323-3300 - 407-322-3507 (fax)
www.floridaextruders.com
Florida COA No. 9235

TITLE: Milestone Series 1000, 1500 & 2000 Non-Impact Resistant Aluminum Single Frame Radius Head SH Window Installation Dwg. for Masonry/Wood Substrate with Concrete/Wood Screws

No.	Date	By	Description
0	12/27/06	RJA	Supersedes FLEX0040
1	11/14/06	RJA	Revised Anchorage
2	3/02/07	RJA	External Connections

Date: 11/14/06
Scale: NTS
Drawn By: RJA
Checked By: JH

Robert J. Amoruso, P.E.
Fl. License No. 49752

ROBERT JAMES AMORUSO LICENSE No. 49752 PROFESSIONAL ENGINEER STATE OF FLORIDA
3/8/07

Drawing No. FLEX22110
Sheet 1 of 2
Sheet 1 of 2

FASTENER LOCATION TABLE (see Elevation View, Sheet 1)

Series	Size Code	Frame Width and Height: Width	Frame Width and Height: Height (Full Radius)	Frame Width and Height: Height (Half Radius)	Fastener Screw Location: Head (No. 10 WS)	Fastener Screw Location: Jambs (No. 10 WS or Concrete Screw)
1000/1500/2000	12	19 1/8	26 13/16	28 5/16	A, B, C	D, E, F, G, H, I
1000/1500/2000	13	19 1/8	39 3/16	40 11/16	A, B, C	D, E, F, G, H, I
1000/1500/2000	14	19 1/8	51 7/16	52 15/16	A, B, C	D, E, F, G, H, I
1000/1500/2000	145	19 1/8	57 1/16	58 9/16	A, B, C	D, E, F, G, H, I
1000/1500/2000	15	19 1/8	63 13/16	65 5/16	A, B, C	D, E, F, G, H, I
1000/1500/2000	16	19 1/8	72 13/16	74 5/16	A, B, C	D, E, F, G, H, I, J, K
1000/1500	17	19 1/8	84	84	A, B, C	D, E, F, G, H, I, J, K
2000	17	19 1/8	90	86 5/16	A, B, C	D, E, F, G, H, I, J, K, Y, Z
1000/1500/2000	1H2	26 1/2	27 7/16	29 9/16	A, B, C	D, E, F, G, H, I
1000/1500/2000	1H3	26 1/2	39 13/16	41 15/16	A, B, C	D, E, F, G, H, I
1000/1500/2000	1H4	26 1/2	52 1/16	54 3/16	A, B, C	D, E, F, G, H, I
1000/1500/2000	1H45	26 1/2	57 11/16	59 13/16	A, B, C	D, E, F, G, H, I
1000/1500/2000	1H5	26 1/2	64 7/16	66 9/16	A, B, C	D, E, F, G, H, I
1000/1500/2000	1H6	26 1/2	73 7/16	75 9/16	A, B, C	D, E, F, G, H, I, J, K
1000/1500	1H7	26 1/2	84	84	A, B, C	D, E, F, G, H, I, J, K
2000	1H7	26 1/2	90	87 9/16	A, B, C	D, E, F, G, H, I, J, K, Y, Z
1000/1500/2000	3H2	30 1/2	27 7/3/96	30 11/48	A, B, C	D, E, F, G, H, I
1000/1500/2000	3H3	30 1/2	40 13/96	42 29/48	A, B, C	D, E, F, G, H, I
1000/1500/2000	3H4	30 1/2	52 37/96	54 41/48	A, B, C	D, E, F, G, H, I
1000/1500/2000	3H45	30 1/2	58 1/96	60 23/48	A, B, C	D, E, F, G, H, I
1000/1500/2000	3H5	30 1/2	64 73/96	67 11/48	A, B, C	D, E, F, G, H, I
1000/1500/2000	3H6	30 1/2	73 73/96	76 11/48	A, B, C	D, E, F, G, H, I, J, K
1000/1500	3H7	30 1/2	84 1/96	83 47/48	A, B, C	D, E, F, G, H, I, J, K
2000	3H7	30 1/2	90 1/96	89 47/48	A, B, C	D, E, F, G, H, I, J, K, Y, Z
1000/1500/2000	22	37	28 5/16	31 5/16	A, B, C	D, E, F, G, H, I
1000/1500/2000	23	37	40 11/16	43 11/16	A, B, C	D, E, F, G, H, I
1000/1500/2000	24	37	52 15/16	55 15/16	A, B, C	D, E, F, G, H, I
1000/1500/2000	245	37	58 9/16	61 9/16	A, B, C	D, E, F, G, H, I
1000/1500/2000	25	37	65 5/16	68 5/16	A, B, C	D, E, F, G, H, I
1000/1500/2000	26	37	74 5/16	77 5/16	A, B, C	D, E, F, G, H, I, J, K
1000/1500	27	37	84	84	A, B, C	D, E, F, G, H, I, J, K
2000	27	37	90	89 5/16	A, B, C	D, E, F, G, H, I, J, K, Y, Z
1000/1500/2000	482	48	29 7/32	33 7/48	A, B, C	D, E, F, G, H, I
1000/1500/2000	483	48	41 19/32	45 25/48	A, B, C	D, E, F, G, H, I
1000/1500/2000	484	48	53 27/32	57 37/48	A, B, C	D, E, F, G, H, I
1000/1500/2000	4845	48	59 15/32	63 19/48	A, B, C	D, E, F, G, H, I
1000/1500/2000	485	48	66 7/32	70 7/48	A, B, C	D, E, F, G, H, I
1000/1500/2000	486	48	75 7/32	79 7/48	A, B, C	D, E, F, G, H, I, J, K
1000/1500	487	48	84	84 1/12	A, B, C	D, E, F, G, H, I, J, K
2000	487	48	90	90 1/12	A, B, C	D, E, F, G, H, I, J, K, Y, Z
1000/1500/2000	32	53 1/8	29 21/32	34	A, B, C	D, E, F, G, H, I
1000/1500/2000	33	53 1/8	42 1/32	46 3/8	A, B, C	D, E, F, G, H, I
1000/1500/2000	34	53 1/8	54 9/32	58 5/8	A, B, C	D, E, F, G, H, I
1000/1500/2000	345	53 1/8	59 29/32	64 1/4	A, B, C	D, E, F, G, H, I
1000/1500/2000	35	53 1/8	66 21/32	71	A, B, C	D, E, F, G, H, I
1000/1500/2000	36	53 1/8	75 21/32	80	A, B, C	D, E, F, G, H, I, J, K
1000/1500	n/a	n/a	n/a	n/a	n/a	n/a
2000	37	53 1/8	90	90	A, B, C	D, E, F, G, H, I, J, K, Y, Z

FASTENER INSTALLATION INSTRUCTIONS - FLEX22110

3/16" DIA. CONCRETE SCREW WITH NON-STRUCTURAL ONE BY WOOD BUCK:

(I) Where window is installed in an opening with a non-structural one by wood buck for the jambs and masonry or concrete sill, installation is as follows:
(1) At the jambs, use a 3/16" diameter concrete screw of sufficient length to achieve minimum embedment of 1-1/4" into masonry or concrete. See "Parts List" on Sheet 1 of this drawing for concrete screw size, embedment and load requirements. See FLEX20100, Note 7 for additional concrete screw requirements.
(2) At the sill, apply a Structural Adhesive Sealant for the full length of the Sill meeting the requirements of Note 2.b.i on FLEX 20100.
(J) See fastener installation table on this sheet for concrete screw locations in jambs and additional installation requirements.

#10 WOOD SCREW WITH (1) STRUCTURAL BUILD-DOWN FOR RADIUS HEAD, (2) OPTIONAL STRUCTURAL TWO BY WOOD BUCK AND (3) OPTIONAL ONE BY WOOD BUCK AT HEAD AND/OR JAMBS (SECTION A-A ALTERNATE ILLUSTRATES THIS OPTION FOR HEAD, SIMILAR FOR SECTION B-B AT JAMB):

(K) Where window is installed in an opening with a (1) structural build-down for radius head, (2) optional structural two by wood buck and (3) optional one by wood buck at head and/or jambs, installation is as follows:
(1) For structural build-down at the head and/or two by wood buck at the head and/or jambs as applicable, use #10 wood screws of sufficient length to achieve 1-3/8" min. embedment into the two by wood buck and/or or structural build-down. See "Parts List" on Sheet 1 of this drawing for wood screw size and embedment. See FLEX20100, Note 8 for additional wood screw requirements.
(2) For one by wood buck used in conjunction with a structural two by wood buck at the head and/or jambs as applicable use #10 wood screws of sufficient length to achieve 1-3/8" min. embedment into the two by wood buck. See "Parts List" on Sheet 1 of this drawing for wood screw size and embedment. See FLEX20100, Note 8 for additional wood screw requirements.
(3) At the sill, apply a Structural Adhesive Sealant for the full length of the Sill meeting the requirements of Note 2.b.i on FLEX 20100.

(L) If a two by and one by wood buck are used together (see Section A-A Alternate, similar for Section B-B), then #10 wood screws of sufficient length to achieve 1-3/8" min. embedment into the two by wood buck will be used and the one by wood buck will be secured to the two by wood buck as required in Note 4.a.ii.2 on drawing FLEX20100.
(M) #10 wood screws shall be installed at all factory applied installation fastener hole locations where applicable.
(N) Wood screws shall not be used to fasten assembly into the end grain of wood.

DESIGN PRESSURE RATING & FBC CODE COMPLIANCE

(O) If exact window size is not listed in fastener installation table, use fastener locations listed for next larger size.
(P) Installations depicted in these instructions acceptable for design pressures to 70 PSF for the window sizes shown in the chart. Design Pressures (D.P.) are positive and negative. Overall window assembly design pressure may be less than that shown in the fastener quantity table and shall be determined in accordance with Note 13 of FLEX20100.
(Q) Production Glazing may differ from that tested as allowed by ANSI/AAMA/NWWDA 101/I.S. 2, 101/I.S. 2/NAFS or AAMA/WDMA/CSA 101/I.S. 2/A440 and applicable Building Code. See Note 12 and 13 on Drawing FLEX 20100 for further details.
(R) Structural build-down at head, two by wood buck and/or framing at the head and jambs to be securely fastened to transfer the load to the masonry, concrete or other structural substrate per the FBC and the engineer of record's details as applicable.
(S) See FLEX20100, Notes 10 to 15 for additional FBC Code Compliance.

FASTENER LOCATION TABLE NOTES:
1. This chart and Notes I, J, K.1, L, M and N for use when Radius Head Flange Window is installed in opening with the following attributes:
   a. Wood Structural Build-Down at Head, and
   b. Masonry/Concrete Substrate and One-By Wood Buck at Jambs.
   a. Wood Structural Build-Down at Head,
   b. Optional Structural Two By Buck is installed at the head or jambs, and
   c. Optional One By Wood Buck is installed at the head or jambs.
3. See Note R regarding structural framing requirements.
4. See Sheet 1 for Fastener Location Diagrams.
5. Fasteners Y & Z applicable to Series 2000 Size 37 Only. 3/16" Hole must be drilled in field.

Florida Extruders Int'l., Inc.
2540 Jewett Lane - Sanford, FL 32771
407-323-3300 - 407-322-3507 (fax)
www.floridaextruders.com
Florida COA No. 9235

TITLE: Milestone Series 1000, 1500 & 2000 Non-Impact Resistant Aluminum Single Frame Radius Head SH Window Installation Dwg. for Masonry/Wood Substrate with Concrete/Wood Screws

No.	Date	By	Description
0	12/27/06	RJA	Supersedes FLEX0040
1	11/14/06	RJA	Revised Anchorage
2	3/02/07	RJA	External Connections

Date: 3/02/07
Scale: NTS
Drawn By: RJA
Checked By: JH

Drawing No. FLEX22110
Sheet 2 of 2

Florida Product Approval # FL9262

SINGLE HUNG

SHEET: WINb

FLORIDA EXTRUDERS
WINDOWS IN BLOCK
2 of 6
RELEASE DATE: 09/03/08

COPYRIGHT © 2002 MARONDA HOMES

Maronda Homes
(407) 321-0064 4005 MARONDA WAY SANFORD, FLORIDA

REVISIONS :
2-16-09 Updated to Code.

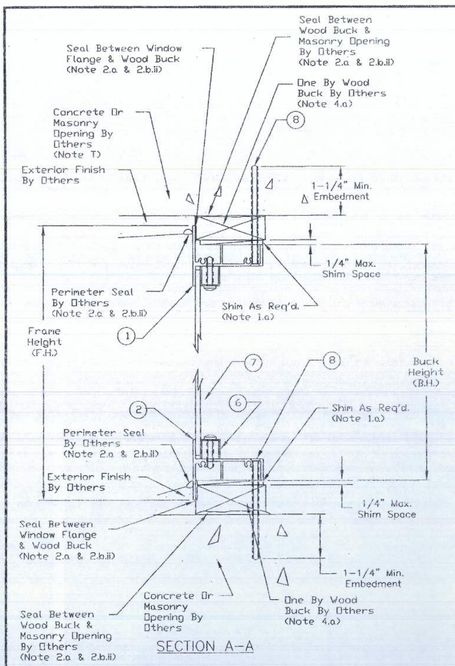

SECTION A–A

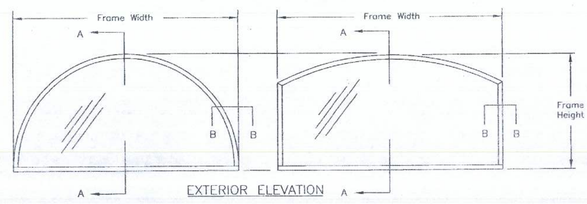

EXTERIOR ELEVATION

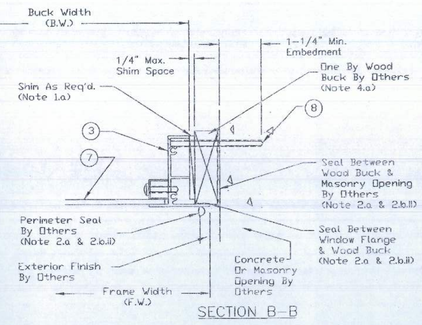

SECTION B–B

DISCLAIMER: The purpose of this installation drawing is to present the manufacturer's recommendations for anchorage [i.e., concrete screws, wood screws, and tapping screws] to achieve the design pressure specified on the fenestration product as required by the 2001 Florida Building Code (FBC), Section 1707.4.4, 2004 FBC-Building, Section 1714.5.4 and the 2004 FBC-Residential, Section R613.6. Recommendations regarding flashing, sealing, sealants or other joint sealant practices does not constitute a warranty either expressed or implied.

GENERAL NOTES

(1 to 15) See General Notes Drawing FLEX20100, Sheet 1 & 2.

(A) Milestone Series 1000 Designer Fixed Aluminum Window is shown. Also applicable to Series 2000 Designer Fixed Aluminum Windows.

(B) Drawing applicable to Non-Impact Resistant glazed windows.

(C) Production Glazing may differ from that tested as allowed by ANSI/AAMA/NWWDA 101/I.S. 2, 101/I.S. 2/NAFS or AAMA/WDMA/CSA 101/I.S. 2/A440 and applicable Building Code. See Note 12 and 13 on Drawing FLEX 20100 for further details.

(D) For Fastener Location & Quantities see Sheet 2 of this drawing. See Note (H) regarding deviations.

(E) Concrete screw edge distance measured from edge of concrete/masonry/block to centerline of concrete screw must meet or exceed 2 1/4". Minimum size and embedment per Parts List. See Note (H) regarding deviations.

(F) Wood or tapping screw edge distance measured from edge of wood to centerline of wood or tapping screw must meet or exceed 1". Minimum size and embedment per Parts List. See Note (H) regarding deviations.

(G) All field supplied holes in the frame (if required) will be 3/16" in diameter for 3/16" concrete screws and #10 wood screws.

(H) Any deviation less than the minimum requirements stated must be approved by the manufacturer or engineered by "other" Design Professional in accordance with the applicable Building Code and Product Approval.

accordance with the applicable Building Code and Product Approval.

PARTS LIST

1 Head - Flange Frame
2 Sill - Flange Frame
3 Jamb - Flange Frame
4 Not Used
5 Not Used
6 Glazing Bead
7 Glazing - See Note (B) and (C)
8 3/16" Dia. Flat Head Concrete Screw with minimum working load in shear of 180 lbs at 1 1/4" embedment. See Note (I) on Sheet 2 and Note 7 on Drawing FLEX20100.
9 #10 Flat Head Wood or Tapping Screw with a minimum embedment of 1-3/8" into "Structural Two By Buck or Framing". See Note (K) on Sheet 2 and Note 8 on Drawing FLEX20100.

Sheet 2 and Note 8 on Drawing FLEX20100.

Florida Extruders Int'l., Inc.
2540 Jewett Lane • Sanford, FL 32771
407-323-3300 • 407-322-3507 (fax)
www.floridaextruders.com
Florida COA No. 9235

TITLE
Milestone Series 1000 and 2000 Non-Impact Resistant Aluminum Flange Frame Designer Fixed Window Installation Drawing For Masonry Substrate & Concrete Header

REVISIONS

No.	Date	By	Description
0	12/27/06	RJA	Supersedes FLEX0035
1	1/14/08	RJA	Revised Anchorage
2	1/9/07	RJA	Revised edge distance note

Date: 1/9/07
Scale: NTS
Drawn By: RJA
Checked By: JH

Robert J. Amoruso, P.E.
FL License No. 49752

ROBERT JAMES AMORUSO LICENSE No. 49752 STATE OF FLORIDA PROFESSIONAL ENGINEER

Drawing No. FLEX28110
Sheet 1 of 2

FASTENER INSTALLATION INSTRUCTIONS - FLEX28110

3/16" DIA. CONCRETE SCREW WITH NON-STRUCTURAL ONE BY WOOD BUCK AND CONCRETE BUILD-DOWN:

(I) Where window is installed in an opening with a non-structural one by wood buck for the head, sill and jambs, use a 3/16" diameter concrete screw of sufficient length to achieve minimum embedment of 1-1/4" into masonry or concrete. See "Parts List" on Sheet 1 of this drawing for concrete screw size, embedment and load requirements. See FLEX20100, Note 7 for additional concrete screw requirements.
(J) Fastener spacing shall be per Notes (N), (P) and (Q) below.

#10 WOOD SCREW WITH STRUCTURAL TWO BY WOOD BUCK AND CONCRETE BUILD-DOWN. USED WHEN TWO BY BUCK EMPLOYED IN LIEU OF ONE BY BUCK (THIS CONFIGURATION NOT SHOWN):

(K) Where window is installed in an opening with a structural two by wood buck for the head, sill and jambs, use #10 wood screws of sufficient length to achieve 1-3/8" min. embedment into the two by wood buck. See "Parts List" on Sheet 1 of this drawing for wood screw size and embedment. See FLEX20100, Note 8 for additional wood screw requirements.
(L) Wood screws shall not be used to fasten assembly into the end grain of wood.
(M) Fastener spacing shall be per Notes (O), (P) and (Q) below.

FASTENER SPACING (See Elevation View on this Sheet):

(N) Concrete screw spacing shall be as follows:
- 5" maximum from each corner of head, sill or jambs,
- evenly spaced between corner anchors but not exceeding 15" o.c. spacing in head, sill or jambs of quarter-circle, quarter-circle arch and half-fan configurations, or
- evenly spaced between corner anchors but not exceeding 18" o.c. spacing in head, sill or jambs of all other configurations not mentioned above, and
- tolerance is +/- 1", and
- this tolerance is applicable to the evenly spaced distance. 2
- Corner distance measured from tip of frame.

(O) #10 wood screw spacing shall be as follows:
- 5" maximum from each corner of head, sill or jambs,
- evenly spaced between corner anchors but not exceeding 12" o.c. spacing in head, sill or jambs for the following configurations,
  - o eyebrow
  - o half-circle arch
  - o half-eyebrow
  - o octagon
  - o fan
  - o pentoid
  - o full-circle
  - o half-circle
  - o triangle
  - o trapezoid
  - o oval
- evenly spaced between corner anchors but not exceeding 9" o.c. spacing in head, sill or jambs for the following configurations,
  - o quarter-circle
  - o quarter-circle arch
  - o half-fan
- tolerance is +/- 1", and
- this tolerance is applicable to the evenly spaced distance. 2
- Corner distance measured from tip of frame.

(P) Spacing in Note (N) and (O) above based on the use of either a concrete screw or #10 wood screw as required for securing the window frame into the substrate as follows (see illustration this sheet).
(Q) If configuration requires combination of concrete screw and #10 wood screw in either a head, sill or jamb, the lower of the maximum spacings above shall be used.

DESIGN PRESSURE RATING & FBC CODE COMPLIANCE

(R) Installations depicted in these instructions acceptable for design pressures to 70 PSF. Design Pressures (D.P.) are positive and negative. Overall window assembly design pressure may be less than that shown in the fastener quantity table and shall be determined in accordance with Note 13 of FLEX20100.
(S) Production Glazing may differ from that tested as allowed by ANSI/AAMA/NWWDA 101/I.S. 2, 101/I.S. 2/NAFS or AAMA/WDMA/CSA 101/I.S. 2/A440 and applicable Building Code. See Note 12 and 13 on Drawing FLEX 20100 for further details.
(T) Concrete Header at head and/or two by wood buck and/or framing at the head, sill and jambs to be securely fastened to transfer the load to the masonry, concrete or other structural substrate per the FBC and the engineer of record's details as applicable.
(U) See FLEX20100, Notes 10 to 15 for additional FBC Code Compliance.

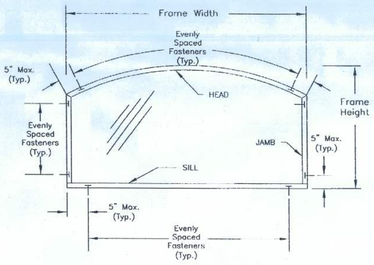

EXTERIOR ELEVATION

FASTENER SPACING ILLUSTRATION
EYEBROW ARCH DESIGNER WINDOW SHOWN AS EXAMPLE

EXAMPLE:

HEAD (CURVED PORTION) SECURED TO CONCRETE HEADER, JAMBS OR SILL SECURED TO CMU AND CAST-SILL RESPECTIVELY WITH ONE BY BUCK

USE 3/16" DIA. CONCRETE SCREWS AT 18" O.C. SPACING BETWEEN ANCHORS AND SPACED 5" MAXIMUM FROM CORNERS.

– or –

HEAD (CURVED PORTION), JAMBS OR SILL SECURED TO STRUCTURAL TWO BY BUCK (ATTACHED TO CONCRETE HEADER, JAMBS OR SILL)

USE #10 WOOD SCREWS AT 12" O.C. SPACING BETWEEN FASTENERS AND SPACED 5" MAXIMUM FROM CORNERS. (NOTE: 12" SPACING FOR EXAMPLE EYEBROW APPLICATION. OTHER APPLICATIONS MAY REQUIRE 9" SPACING

Florida Extruders Int'l., Inc.
2540 Jewett Lane • Sanford, FL 32771
407-323-3300 • 407-322-3507 (fax)
www.floridaextruders.com
Florida COA No. 9235

TITLE
Milestone Series 1000 and 2000 Non-Impact Resistant Aluminum Flange Frame Designer Fixed Window Installation Drawing For Masonry Substrate & Concrete Header

REVISIONS

No.	Date	By	Description
0	12/27/06	RJA	Supersedes FLEX0035
1	1/14/08	RJA	Revised Anchorage
2	1/9/07	RJA	Revised edge distance note

Date: 1/9/07
Scale: NTS
Drawn By: RJA
Checked By: JH

Drawing No. FLEX28110
Sheet 2 of 2

Florida Product Approval # FL9242

FIXED

SHEET: WINb

FLORIDA EXTRUDERS
WINDOWS IN BLOCK
3 of 6
RELEASE DATE: 09/03/08

COPYRIGHT © 2002 MARONDA HOMES

Maronda Homes
(407) 321-0064 4005 MARONDA WAY SANFORD, FLORIDA

REVISIONS :
2-16-09 Updated to Code.

FASTENER QUANTITIES TABLE (See Elevation View which depicts for illustrative purposes only maximum number of fasteners in Head & Jambs)

Series 1000 Horizontal Slider OX - OX Configuration

Size Code	Frame (1) Width	Frame (1) Height	Fastener Quantities (2) Head	Fastener Quantities (2) Jambs
1H2	26 1/2	26	4	2
1H3	26 1/2	38 3/8	4	2
1H4	26 1/2	50 5/8	4	3
1H45	26 1/2	56 1/4	4	4
1H5	26 1/2	63	4	4
1H6	26 1/2	72	4	4
3H2	30 1/2	26	4	2
3H3	30 1/2	38 3/8	4	2
3H4	30 1/2	50 5/8	4	3
3H45	30 1/2	56 1/4	4	4
3H5	30 1/2	63	4	4
3H6	30 1/2	72	4	4
22	37	26	4	2
23	37	38 3/8	4	2
24	37	50 5/8	4	3
245	37	56 1/4	4	4
25	37	63	4	4
26	37	72	4	4
482	48	26	4	2
483	48	38 3/8	4	2
484	48	50 5/8	4	3
4845	48	56 1/4	4	4
485	48	63	4	4
486	48	72	4	4
32	53 1/8	26	4	2
33	53 1/8	38 3/8	4	2
34	53 1/8	50 5/8	4	3
345	53 1/8	56 1/4	4	4
35	53 1/8	63	4	4
36	53 1/8	72	4	4

Series 1000 Horizontal Slider OX - OX Configuration

Size Code	Frame (1) Width	Frame (1) Height	Fastener Quantities (2) Head	Fastener Quantities (2) Jambs
D22	74	26	4	2
D23	74	38 3/8	4	2
D24	74	50 5/8	4	3
D245	74	56 1/4	4	4
D25	74	63	4	4
D26	74	72	4	4
2020	24	24	4	2
2030	24	36	4	2
2040	24	48	4	3
2046	24	54	4	4
2050	24	60	4	4
2060	24	72	4	4
3020	36	24	4	2
3030	36	36	4	2
3040	36	48	4	3
3046	36	54	4	4
3050	36	60	4	4
3060	36	72	4	4
4020	48	24	4	2
4030	48	36	4	2
4046	48	48	4	3
4046	48	54	4	4
4050	48	60	4	4
4060	48	72	4	4
4620	54	24	4	2
4630	54	36	4	2
4640	54	48	4	3
4646	54	54	4	4
4650	54	60	4	4
4660	54	72	4	4
5020	60	24	4	2
5030	60	36	4	3
5040	60	48	4	3
5046	60	54	4	4
5050	60	60	4	4
5060	60	72	4	4
6620	66	24	4	2
6630	66	36	4	2
6640	66	48	4	3
6646	66	54	4	4
6650	66	60	4	4
6660	66	72	4	4
8020	72	24	4	2
8030	72	36	4	2
8040	72	48	4	3
8046	72	54	4	4
8050	72	60	4	4
8060	72	72	4	4

Series 1000 Horizontal Slider XOX Configuration

Size Code	Frame (1) Width	Frame (1) Height	Fastener Quantities (2) Head	Fastener Quantities (2) Jambs
D22	74	26	6	2
D23	74	38 3/8	6	2
D24	74	50 5/8	6	3
D25	74	63	6	4
D26	74	72	6	4
D32	106 1/4	26	6	2
D33	106 1/4	38 3/8	6	2
D34	106 1/4	50 5/8	6	3
D35	106 1/4	63	6	4
D36	106 1/4	72	6	4
T22	111	26	6	2
T23	111	38 3/8	6	2
T24	111	50 5/8	6	3
M2	120	26	6	2
M3	120	38 3/8	6	2
M4	120	50 5/8	6	3
6020	72	24	6	2
6030	72	36	6	2
6040	72	48	6	3
6050	72	60	6	4
6060	72	72	6	4
7020	84	24	6	2
7030	84	36	6	2
7040	84	48	6	3
7050	84	60	6	4
7060	84	72	6	4
8020	96	24	6	2
8030	96	36	6	2
8040	96	48	6	3
8050	96	60	6	4
8060	96	72	6	4
9020	108	24	6	2
9030	108	36	6	2
9040	108	48	6	3
9050	108	60	6	4
9060	108	72	6	4
10020	120	24	6	2
10030	120	36	6	2
10040	120	48	6	3

Fastener Quantities Table Notes:
1) Buck Width and Height = Frame Width or Height – 1".
2) Only the required number of holes ot the correct locations will be present in the frame based on the number of fastners to be installed listed above.

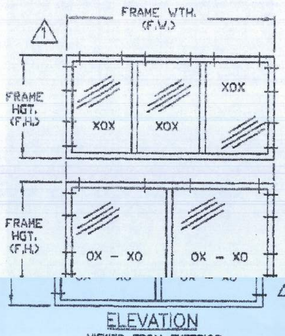

ELEVATION
VIEWED FROM EXTERIOR

DESIGN PRESSURE RATING & FBC CODE COMPLIANCE

(P) If exact window size is not listed in fastener installation chart, use fastener quantity listed for next larger size.
(Q) Installations depicted in these instructions acceptable for design pressures to 60 PSF for the window sizes shown in the table. Design Pressures (D.P.) are positive and negative. Overall window assembly design pressure may be less than 60 PSF and shall be determined in accordance with Note 13 of FLEX20100.
(Q) Installations depicted in these instructions acceptable for design pressures to 50 PSF for the window sizes shown in the table. Design Pressures (D.P.) are positive and negative. Overall window assembly design pressure may be less than 50 PSF and shall be determined in accordance with Note 13 of FLEX20100.
(R) Production Glazing may differ from that tested as allowed by ANSI/AAMA/NWWDA 101/I.S. 2, 101/I.S. 2/NAFS or AAMA/WDMA/CSA 101/I.S. 2/A440 and applicable Building Code. See Note 12 and 13 on Drawing FLEX 20100 for further details.
(S) Two by wood buck and/or framing at the head and jambs to be securely fastened to transfer the load to the masonry, concrete or other structural substrate per the FBC and the engineer of record's details as applicable.
(T) See FLEX20100, Notes 10 to 15 for additional FBC Code Compliance.

Florida Extruders Int'l, Inc.
2590 Jewett Lane - Sanford, FL 32771
407-323-3300 - 407-322-3587 (fax)
www.floridaextruders.com
Florida COA No. 9235

TITLE
Milestone Series 1000
Non-Impact Resistant Aluminum Range
Frame Horizontal Sliding Window
Installation Drawing for Masonry
Substrate with Concrete Screws

REVISIONS			
No.	Date	By	Description
			Supersedes FLEX0020
0	3/27/09	KJA	Supersedes FLEX0022
1	11/14/08	RJA	Revised Anchorage

Date: 11/14/08
Scale: N/S
Drawn By: RJA
Checked By: JH

Drawing No. FLEX25110
Sheet 2 of 2

Florida Product Approval # FL9236

HORIZONAL

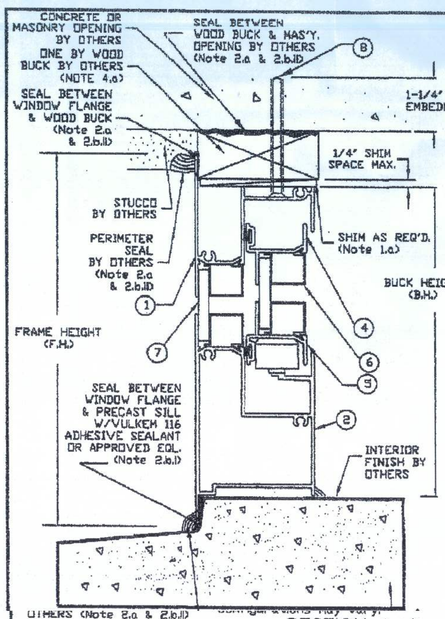

SECTION A–A

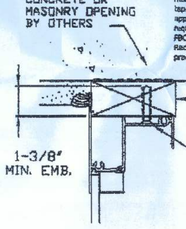

SECTION A–A (ALTERNATE)
For installation with two by wood bucks.
Similar for Section B–B (not shown).

DISCLAIMER: The purpose of this installation drawing is to present the manufacturer's recommendations for anchorage (i.e., concrete screws, wood screws, tapping screws and Vulkem Structural Adhesive (or other approved equal) as applicable) to achieve the design pressure specified on the fenestration product as restricted by the 2001 Florida Building Code (FBC), Section 1707.4.4, 2004 FBC-Building, Section 1714.5.4 and the 2004 FBC-Residential, Section R613.5. Recommendations regarding flashing, sealing, sealants or other joint sealant practices does not constitute a warranty either expressed or implied.

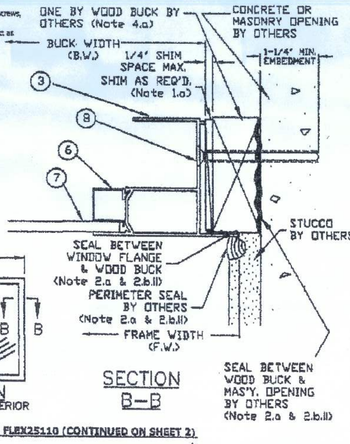

SECTION B–B

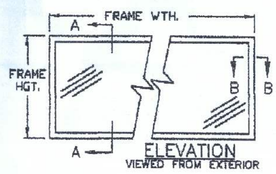

ELEVATION
VIEWED FROM EXTERIOR

GENERAL NOTES

(1 to 15) See General Notes Drawing FLEX20100, Sheet 1 & 2.
(A) Milestone Series 1000 Horizontal Sliding Aluminum Window in XO, OX and XOX configurations is shown.
(B) Drawing applicable to Non-Impact Resistant glazed windows.
(C) Production Glazing may differ from that tested as allowed by ANSI/AAMA/NWWDA 101/I.S. 2, 101/I.S. 2/NAFS or AAMA/WDMA/CSA 101/I.S. 2/A440 and applicable Building Code. See Note 12 and 13 on Drawing FLEX 20100 for further details.
(D) For Fastener Quantities see Sheet 2 of this drawing. See Note (H) regarding deviations.
(E) Concrete screw edge distance measured from edge of concrete/masonry/block to centerline of concrete screw must meet or exceed 2 1/4". Minimum size and embedment per Parts List. See Note (H) regarding distance measured from edge of wood to centerline of wood or tapping screw must meet or exceed 1". Minimum size and embedment per Parts List. See Note (H) regarding deviations.
(G) Not Used
(H) Any deviation less than the minimum requirements stated must be approved by the manufacturer or engineered by "other" Design Professional in accordance with the applicable Building Code and Product Approval.

PARTS LIST

1 Head - Flange Frame
2 Sill - Flange Frame
3 Jamb - Flange Frame
4 Head - Sash
5 Sill - Sash
6 Glazing Bead
7 Glazing - See Note (B) and (C)
8 3/16" Dia. Flat Head Concrete Screw with minimum working load in shear of 160 lbs at 1 1/4" embedment. See Note (I) on this drawing and Note 7 on Drawing FLEX20100.
9 #10 Flat Head Wood or Tapping Screw with a minimum embedment of 1-3/8" into "Structural Two By Buck or Framing". See Note (L) on this drawing and Note 8 on Drawing FLEX20100.

FASTENER INSTALLATION INSTRUCTIONS - FLEX25110 (CONTINUED ON SHEET 2)

3/16" DIA. CONCRETE SCREW WITH NON-STRUCTURAL ONE BY WOOD BUCK:

(I) Where window is installed in an opening with a non-structural one by wood buck for the head and jambs and masonry or concrete sill, installation is as follows:
- At the head and jambs, use a 3/16" diameter concrete screw of sufficient length to achieve minimum embedment of 1-1/4" into masonry or concrete. See "Parts List" on this drawing for concrete screw size, embedment and load requirements. See FLEX20100, Note 7 for additional concrete screw requirements.
- At the sill, apply a Structural Adhesive Sealant for the full length of the Sill meeting the requirements of Note 2.b.i on FLEX20100.

(J) See fastener quantity table on sheet 2 for concrete screw quantities and additional installation requirements. All factory applied installation fastener holes in the head and jambs will be filled with concrete screws in accordance with note (I) above.

#10 WOOD SCREW WITH STRUCTURAL TWO BY WOOD BUCK (See Section A-A, Alternate on Sheet 1. Similar for Section B-B):

(L) Where window is installed in an opening with a structural two by wood buck for the head and jambs and a masonry or concrete sill, installation is as follows:
- At the head and jambs, use #10 wood screws of sufficient length to achieve 1-3/8" min. embedment into the two by wood buck. See "Parts List" on this drawing for wood screw size and embedment. See FLEX20100, Note 8 for additional wood screw requirements.
- At the sill, apply a Structural Adhesive Sealant for the full length of the Sill meeting the requirements of Note 2.b.i on FLEX20100.

(M) See fastener quantity table this sheet for wood screw quantities and additional installation requirements.
(N) Horizontal Sliding XO-OX and XOX configurations are fabricated with the required number of holes for installations. All factory applied installation fastener holes in the head and jambs will be filled with #10 wood screws in accordance with note (L) above.
(O) Wood screws shall not be used to fasten assembly into the end grain of wood.

Florida Extruders Int'l, Inc.
2590 Jewett Lane - Sanford, FL 32771
407-323-3300 - 407-322-3587 (fax)
www.floridaextruders.com
Florida COA No. 9235

TITLE
Milestone Series 1000
Non-Impact Resistant Aluminum Range
Frame Horizontal Sliding Window
Installation Drawing for Masonry
Substrate with Concrete Screws

REVISIONS			
No.	Date	By	Description
			Supersedes FLEX0020
0	3/27/09	KJA	Supersedes FLEX0022
1	11/14/08	RJA	Revised Anchorage

Date: 11/14/08
Scale: N/S

Robert J. Amoruso, P.E.
FL License No. 49752

ROBERT JAMES AMORUSO LICENSE No. 49752 STATE OF FLORIDA PROFESSIONAL ENGINEER

Drawing No. FLEX25110
Sheet 1 of 2

SHEET:
WINb

FLORIDA EXTRUDERS
WINDOWS IN BLOCK
4 of 6
RELEASE DATE: 09/03/08

COPYRIGHT © 2002 MARONDA HOMES

Maronda Homes
(407) 321-0064 4005 MARONDA WAY SANFORD, FLORIDA

REVISIONS :
2-16-09 Updated to Code.

Florida Product Approval # FL3136-R3

MULLION

WIND

SHEET:

FLORIDA EXTRUDERS

WINDOWS IN BLOCK

5 of 6

RELEASE DATE: 09/03/08

COPYRIGHT © 2002 MARONDA HOMES

Maronda Homes

(407) 321-0064 4005 MARONDA WAY SANFORD, FLORIDA

REVISIONS:

2-16-09 Updated to Code.

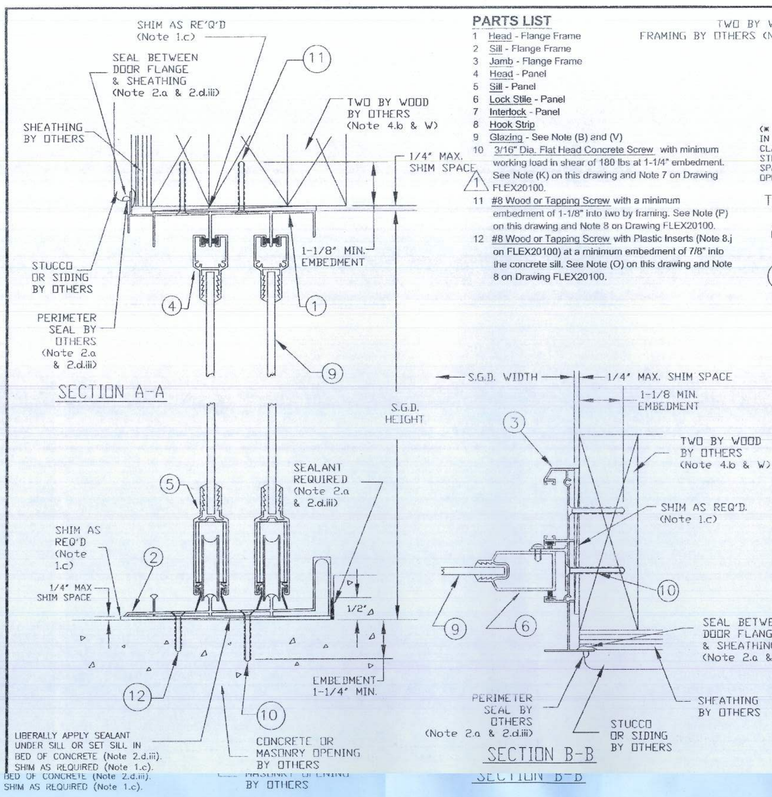

PARTS LIST

1. Head - Flange Frame
2. Sill - Flange Frame
3. Jamb - Flange Frame
4. Head - Panel
5. Sill - Panel
6. Lock Stile - Panel
7. Interlock - Panel
8. Hook Strip
9. Glazing - See Note (B) and (V)
10. 3/16" Dia. Flat Head Concrete Screw with minimum working load in shear of 180 lbs at 1-1/4" embedment. See Note (K) on this drawing and Note 7 on Drawing FLEX20100.
11. #8 Wood or Tapping Screw with a minimum embedment of 1-1/8" into two by framing. See Note (P) on this drawing and Note 8 on Drawing FLEX20100.
12. #8 Wood or Tapping Screw with Plastic Inserts (Note 8.j on FLEX20100) at a minimum embedment of 7/8" into the concrete sill. See Note (O) on this drawing and Note 8 on Drawing FLEX20100.

DISCLAIMER: The purpose of this installation drawing is to present the manufacturer's recommendations for anchorage (i.e., concrete screws, wood screws and tapping screws) to achieve the design pressure specified on the fenestration product as required by the 2001 Florida Building Code (FBC), Section 1707.4.4, 2004 FBC-Building, Section 1714.5.4 and the 2004 FBC-Residential, Section R613.6. Recommendations regarding flashing, sealing, sealants or other joint sealant practices does not constitute a warranty either expressed or implied.

Florida Extruders Int'l., Inc.
2540 Jewett Lane - Sanford, FL 32771
407-323-3300 - 407-322-3507 (fax)
www.floridaextruders.com
Florida COA No. 9235

TITLE: Milestone Series 1000 & 2000 Non-Impact Resistant Aluminum Flange Frame Sliding Glass Door Installation Drawing for Concrete Sill w/Concrete Screws & Wood Screws w/#8 Wood Screws

REVISIONS			
No.	Date	By	Description
0	12/27/06	RJA	Supersedes FLEX0027
1	1/30/07	TJD	Revised per client review

Date: 3/02/07
Scale: NTS
Drawn By: RJA
Checked By: JH

Robert J. Amoruso, P.E.
FL License No. 49752

ROBERT JAMES AMORUSO LICENSE No. 49752 STATE OF FLORIDA PROFESSIONAL ENGINEER

3/2/07

Drawing No. FLEX24111
Sheet 1 of 2

Fastener Installation Chart

Size Code	Configuration	Size Width	Size Height	Required Quantities of Fasteners Jamb (No. 8 WS)	Head (No. 8 WS)	Sill (3/16" CS)	Hook Strip (No. 8 WS)
4068	XX, OX, XO	48	80	8	6	3 (D0)	8
5068	XX, OX, XO	60	80	8	6	3 (D0)	8
6068	XX, OX, XO	72	80	8	8	4 (D0)	8
8068	XX, OX, XO	96	80	8	10	5 (D10)	8
10068	XX, OX, XO	120	80	8	12	7 (D1)	8
5080	XX, OX, XO	60	96	10	6	3 (D0)	10
6080	XX, OX, XO	72	96	10	8	4 (D0)	10
8080	XX, OX, XO	96	96	10	10	5 (D0)	10
10080	XX, OX, XO	120	96	10	12	8 (D02)	10
60100	XX, OX, XO	60	120	12	6	3 (D0)	12
60100	XX, OX, XO	72	120	12	8	4 (D0)	12
80100	XX, OX, XO	96	120	12	10	5 (D0)	12
9068	OXO	109 1/8	80	8	10	6 (D1)	8
12068	OXO	145 1/8	80	8	14	9 (D2)	8
15068	OXO	181 1/8	80	8	16	12 (D4)	8
9080	OXO	109 1/8	96	10	10	7 (D2)	10
12080	OXO	145 1/8	96	10	14	10 (D3)	10
15080	OXO	181 1/8	96	10	16	14 (D6)	10
90100	OXO	109 1/8	120	12	10	7 (D2)	12
120100	OXO	145 1/8	120	12	14	11 (D4)	12
9068	XXX	106 5/8	80	8	10	6 (D1)	8
12068	XXX	142 5/8	80	8	14	9 (D2)	8
15068	XXX	178 5/8	80	8	16	12 (D4)	8
9080	XXX	106 5/8	96	10	10	6 (D1)	10
12080	XXX	142 5/8	96	10	14	10 (D3)	10
15080	XXX	178 5/8	96	10	16	14 (D6)	10
90100	XXX	106 5/8	120	12	10	7 (D2)	12
12100	XXX	142 5/8	120	12	14	11 (D4)	12
10068	OXXO	119 5/8	80	8	12	7 (D1)	8
12068	OXXO	143 5/8	80	8	14	9 (D2)	8
16068	OXXO	191 5/8	80	8	18	13 (D4)	8
10080	OXXO	119 5/8	96	10	12	8 (D2)	10
12080	OXXO	143 5/8	96	10	14	10 (D3)	10
16080	OXXO	191 5/8	96	10	18	15 (D5)	10
100100	OXXO	119 5/8	120	12	12	8 (D2)	12
120100	OXXO	143 5/8	120	12	14	11 (D4)	12
160100	OXXO	191 5/8	120	12	18	17 (D8)	12
10068	XXXX	117 1/4	80	8	12	7 (D1)	8
12068	XXXX	141 1/4	80	8	14	9 (D2)	8
16068	XXXX	189 1/4	80	8	18	13 (D4)	8
10080	XXXX	117 1/4	96	10	12	8 (D2)	10
12080	XXXX	141 1/4	96	10	14	10 (D3)	10
16080	XXXX	189 1/4	96	10	18	15 (D5)	10
100100	XXXX	117 1/4	120	12	12	8 (D2)	12
120100	XXXX	141 1/4	120	12	14	11 (D4)	12
160100	XXXX	189 1/4	120	12	18	17 (D8)	12

Fastener Installation Chart Notes:

1) In some cases concrete screws are only required in one of the factory applied installation hole sets (i.e., a hole set being the two holes lying in a plane perpendicular to the width of the door frame). In those cases designated as "D0" in the installation chart, one of the holes will receive a Concrete Screw and the remaining holes will be filled in accordance with Notes O and P.
2) In some cases concrete screws are required in both factory applied installation hole sets. "D1" through "D8" designates in which size & configurations two concrete screws are required. The remaining holes will be filled in accordance with Notes O and P.
   c) "D3" means, install two concrete screws in three sets of installation holes.
   d) "D4" means, install two concrete screws in four sets of installation holes.
   e) "D5" means, install two concrete screws in five sets of installation holes.
   f) "D6" means, install two concrete screws in six sets of installation holes.
   g) "D7" means, install two concrete screws in seven sets of installation holes.
   h) "D8" means, install two concrete screws in eight sets of installation holes.
3) Location of additional concrete screws in head & sill should be prioritized as follows:
   a) First adjacent to interlock or butt stiles in head & sill.
   b) Secondly, at each end of head & sill near jamb corner, if needed.
   c) Locations in head & sill other than as listed in a & b.
4) Location of additional concrete screws in jambs should be prioritized as follows:
   a) First adjacent to locks in jambs.
   b) Secondly, at each end of jambs near head & sill corners.
   c) Locations in jambs other than as listed in a & b.
5) CS = concrete screw and WS = wood screw

GENERAL NOTES

(1 to 15) See General Notes Drawing FLEX20100, Sheet 1 & 2.
(A) Milestone Series 1000 Sliding Glass Door is shown. Also applicable to Milestone Series 2000 Sliding Glass Door.
(B) Drawing applicable to Non-Impact Resistant Sliding Glass Doors glazed with 3/16" fully tempered glass. See Note (V).
(C) Where "X" represents moving panel and "O" represents fixed panel, approved configurations are as listed on the fastener installation chart on Sheet 2.
(D) Not all configurations listed on the fastener chart are shown on this drawing, however installation sections "A-A", "B-B" & Hook Strip Detail apply to installation of all approved configurations.
(E) For pocket door configurations, use closest by-pass door size and configuration in the chart to the finished opening of the pocket door.
(F) Concrete screw edge distance measured from edge of concrete/masonry/block to centerline of concrete screw must meet or exceed 2 1/4". Minimum size and embedment per Parts List. See Note (J) regarding deviations.
(G) Wood or tapping screw edge distance measured from edge of wood receiving the point to centerline of wood or tapping screw must meet or exceed 1". Minimum size and embedment per Parts List. See Note (J) regarding deviations.
(H) All field supplied holes in the frame (if required) will be 3/16" in diameter.
(I) Wood screw withdrawal values used to generate the fastening requirements are based on Spruce-Pine-Fur with a Specific Gravity of 0.50. See Note (J) regarding deviations.
(J) Any deviation less than the minimum requirements stated must be approved by the manufacturer or engineered by "other" Design Professional in accordance with the applicable Building Code and Product Approval.

FASTENER INSTALLATION INSTRUCTIONS - FLEX24111

3/16" DIA. CONCRETE SCREW WITH SILL:

(K) Where door is installed in an opening with a masonry or concrete sill, use a 3/16" diameter concrete screw of sufficient length to achieve minimum embedment of 1-1/4" into masonry or concrete. See "Parts List" on Sheet 1 of this drawing for concrete screw size, embedment and load requirements. See FLEX20100, Note 7 for additional concrete screw requirements.
(L) See fastener installation chart this sheet for concrete screw quantities and additional installation requirements.
(M) Install one concrete screw in each pair of factory applied installation holes unless noted otherwize on the fastener installation chart. It is acceptable to install a 3/16" diameter concrete screw with a 1-1/4" embedment in all holes in the sill which will exceed the minimum requirements of the Fastener Installation Chart.
(N) Alternate concrete screw installation fasteners front to back in the sill frame member when both sets of holes are not used.
(O) All remaining factory applied installation fastener holes in the sill not used for concrete screw installation shall be anchored with plastic anchors (see FLEX20100, Note 8.j for details) and #8 wood screws of sufficient length to provide min. 7/8" in. embedment into the concrete or masonry. See "Parts List" on Sheet 1 of this drawing for wood screw size and embedment requirements. See FLEX20100, Note 8 for additional wood screw requirements.

#8 WOOD SCREW WITH STRUCTURAL TWO BY WOOD BUCK FOR HEAD, JAMBS AND POCKET DOOR HOOK STRIP:

(P) Where the head, jambs and pocket door hook strip is installed in a wood opening with a structural two by wood buck and/or framing, use #8 wood screws of sufficient length to achieve 1-1/8" minimum embedment into the two by wood buck and/or framing receiving the point at all factory applied installation holes. See "Parts List" on Sheet 1 of this drawing for wood screw size and embedment requirements. See FLEX20100, Note 8 for additional wood screw requirements.
(Q) See fastener installation chart this sheet for #8 wood screw requirements in jamb(s), head and hook strip.
(R) Not used.
(S) Wood screws shall not be used to fasten assembly into end grain of wood.

(T) If exact door size is not listed in fastener installation chart, use fastener quantity listed for next larger size, for the appropriate design pressure required.
(U) Installations depicted in these instructions acceptable for design pressures to 55 PSF for the window sizes shown in the chart. Design Pressures (D.P.) are positive and negative. Overall window assembly design pressure may be less than that shown in the fastener quantity table and shall be determined in accordance with Note 13 of FLEX20100.
(V) Production Glazing may differ from that tested as allowed by ANSI/AAMA/NWWDA 101/I.S. 2, 101/I.S. 2/NAFS or AAMA/WDMA/CSA 101/I.S. 2/A440 and applicable Building Code. See Note 12 and 13 on Drawing FLEX 20100 for further details.
(W) Two by wood and/or framing to be securely fastened to transfer the load to the masonry, concrete or other structural substrate per the FBC and the engineer of record's details as applicable.
(X) See FLEX20100, Notes 10 to 15 for additional FBC Code Compliance.

Florida Extruders Int'l., Inc.
2540 Jewett Lane - Sanford, FL 32771
407-323-3300 - 407-322-3507 (fax)
www.floridaextruders.com
Florida COA No. 9235

TITLE: Milestone Series 1000 & 2000 Non-Impact Resistant Aluminum Flange Frame Sliding Glass Door Installation Drawing for Concrete Sill w/Concrete Screws & Wood Screws w/#8 Wood Screws

REVISIONS			
No.	Date	By	Description
0	12/27/06	RJA	Supersedes FLEX0027
1	1/30/07	TJD	Revised per client review

Date: 3/02/07
Scale: NTS
Drawn By: RJA
Checked By: JH

Drawing No. FLEX24111
Sheet 2 of 2

Florida Product Approval # FL8409

SLIDING GLA'S DOORS

SHEET: WINb

FLORIDA EXTRUDERS
WINDOWS IN BLOCK
6 of 6
RELEASE DATE: 09/03/08

COPYRIGHT © 2002 MARONDA HOMES

Maronda Homes
(407) 321-0064 4005 MARONDA WAY SANFORD, FLORIDA

REVISIONS :
2-16-09 Updated to Code.

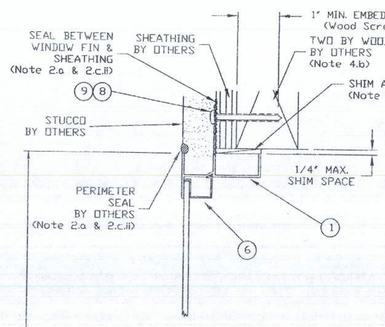

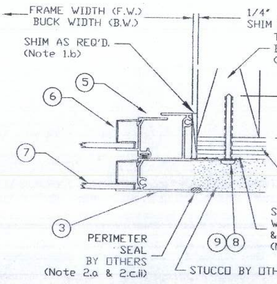

SECTION B--B

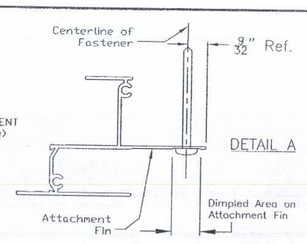

Wood Screw or Nail Head must be in full contact with Attachment Fin. Centerline of fastener shall be approximately 9/32" from edge of Attachment Fin.

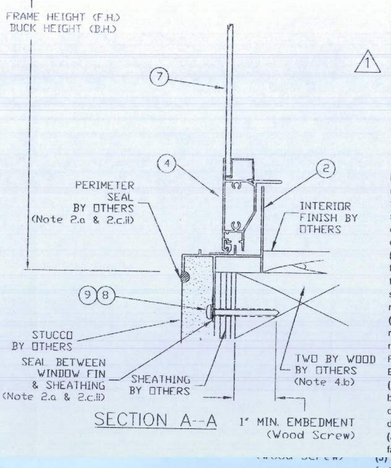

SECTION A--A

GENERAL NOTES

(1 to 15) See General Notes Drawing FLEX20100, Sheet 1 & 2.

(A) Milestone Series 1000 Single Hung Aluminum Window is shown. Also applicable to Milestone Series 1500 and 2000 Single Hung Aluminum Windows.

(B) Drawing applicable to Non-Impact Resistant glazed windows.

(C) Production Glazing may differ from that tested as allowed by ANSI/AAMA/NWWDA 101/I.S. 2, 101/I.S. 2/NAFS or AAMA/WDMA/CSA 101/I.S. 2/A440 and applicable Building Code. See Note 12 and 13 on Drawing FLEX 20100 for further details.

(D) For Fastener Quantities and Spacing see Sheet 2 of this drawing. See Note (H) regarding deviations.

(E) Wood screw and nail withdrawal values used to generate the fastening requirements are based on Spruce-Pine-Fur with a Specific Gravity of 0.50. See Note (H) regarding deviations.

(F) Wood or tapping screw edge distance measured from edge of wood to centerline of wood or tapping screw must meet or exceed 1". Minimum size and embedment per Parts List. See Note (H) regarding deviations.

(G) Nail edge distance measured from edge of wood to centerline of nail must meet or exceed 9/16" or 5 times Shank Diameter, whichever is larger. Minimum size and embedment per Parts List. See Note (H) regarding deviations.

(H) Any deviation less than the minimum requirements stated must be approved by the manufacturer or engineered by "other" Design Professional in accordance with the applicable Building Code and Product Approval.

(I) All field supplied holes in the frame (if required) will be 3/16" in diameter for #8 wood screws or the shank diameter of the nail rounded up to the next standard designation drill bit size.

(J) Wood Screws and Nails SHALL NOT be mixed to fasten the same assembly.

(J) Wood Screws and Nails SHALL NOT be mixed to fasten the same assembly.

DISCLAIMER: The purpose of this installation drawing is to present the manufacturer's recommendations for anchorage (i.e., wood screws, tapping screws, nails and Vulkem Structural Adhesive (or other approved equal) as applicable) to achieve the design pressure specified on the fenestration product as required by the 2001 Florida Building Code (FBC), Section 1707.4.4, 2004 FBC Building, Section 1714.5.4 and the 2004 FBC-Residential, Section R613.6. Recommendations regarding flashing, sealing, sealants or other joint sealant practices does not constitute a warranty either expressed or implied.

FASTENER INSTALLATION INSTRUCTIONS - FLEX21120

#8 WOOD SCREWS:

(K) See sheet 2 for #8 Wood Screw installation fastener chart.

(L) #8 Wood Screw must be of sufficient length to achieve minimum embedment of 1" into the two by wood framing.

(M) See Detail "A" for approximate location of the wood screw on the attachment fin.

(N) Wood screws shall not be used to fasten assembly into end grain of wood.

NAILS:

(O) Nails shall meet the following requirements:
- 0.113" diameter or greater,
- sufficient length to achieve minimum embedment of 1 7/8" into the two by wood framing (generally, nail 2 3/8" length or greater shall meet this requirement), and
- helical (screw) or annular (ring) shank style only.

(P) Manufacturer's nails meeting these requirements are (but not limited to) the following:
- Paslode deformed shank nail, No. 404947, 404537, 650111 and 650148.
- Duro-Fast deformed shank nail No. 325.

(Q) Spacing of nails shall be:
- 4" from each corner of the head, sill and jambs, and
- evenly spaced between corner fasteners and not exceeding the following O.C. spacing
  - a) 6" o.c. spacing for the jambs & 8" o.c. spacing for the head & sill at 61 PSF to 70 PSF, or
  - b) 7" o.c. spacing for the jambs & 9" o.c. spacing for the head & sill at 56 PSF to 60 PSF, or
  - c) 7" o.c. spacing for the jambs & 11" o.c. spacing for the head & sill at 51 PSF to 55 PSF, or
  - d) 8" o.c. spacing for the jambs & 13" o.c. spacing for the head & sill to 50 PSF.
- see Detail "A" for approximate location of the nail on the attachment fin.

(R) Nails shall not be used to fasten assembly into end grain of wood.

PARTS LIST

1. Head - FinFrame
2. Sill - Fin Frame
3. Jamb - Fin Frame
4. Lift Rail - Sash
5. Jamb - Sash
6. Glazing Bead
7. Glazing - See Note (B) and (C)
8. #8 Pan Head Wood or Tapping Screw with a minimum embedment of 1" into the structural wood substrate. See Note (K) & Detail A on this drawing and Note 4.b & 8 on Drawing FLEX20100.
9. Round Head Deformed Shank Nail with minimum 0.113" diameter (11 GA) and minimum embedment of 1-7/8" into the structural wood substrate. See Note (O) and Detail A on this drawing and Notes 4.b & 9 on Drawing FLEX20100.

Robert J. Amoruso, P.E.
FL License No. 49752

ROBERT JAMES AMORUSO LICENSE No. 49752 STATE OF FLORIDA PROFESSIONAL ENGINEER

Drawing No. FLEX21120
Sheet 1 of 2

Florida Extruders Int'l., Inc.
2540 Jewett Lane - Sanford, FL 32771
407-323-3300 - 407-322-3507 (fax)
www.floridaextruders.com
Florida CGA No. 9235

TITLE: Milestone Series 1000, 1500 & 2000 Non-Impact Resistant Aluminum Fin Frame Single Hung Window Installation Drawing for Wood Substrate with Wood Screws or Nails

No.	Date	By	Description
0	12/27/05	RJA	Supersedes FLEX0005
1	11/10/06	RJA	Revised Anchorage

Date: 11/10/06
Scale: NTS
Drawn By: RJA
Checked By: JH

No. 8 Wood and Tapping Screw Fastener Location Tables

Series 1000 & 1500

Commodity

Width	Eh / Es	Centerline of Head & Sill (yes/no)	Installation Dwg.
18 1/8	4	no	2
25 1/2	4	no	2
29 1/2	4	no	2
36	4	no	2
41	4	yes	1
47	4	yes	1
52 1/8	4	yes	1

Height	Et	L1	L2	L3	Eb	Installation Dwg.
25	1 1/2	n/a	14 1/8	21 1/8	3 7/8	2
37 3/8	1 1/2	n/a	17 1/8	33 1/2	3 7/8	2
49 5/8	1 1/2	n/a	26 3/8	45 3/4	3 7/8	2
55 1/4	1 1/2	n/a	29 1/4	51 3/8	3 7/8	2
62	1 1/2	7 3/8	32 5/8	58 1/8	3 7/8	1
71	1 1/2	16 3/8	41 5/8	67 1/8	3 7/8	1
83	1 1/2	28 3/8	53 5/8	79 1/8	3 7/8	1

Modular

Width	Eh / Es	Centerline of Head & Sill (yes/no)	Installation Dwg.
23 1/2	4	no	2
27 1/2	4	no	2
31 1/2	4	no	2
35 1/2	4	no	2
39 1/2	4	yes	1
43 1/2	4	yes	1
47 1/2	4	yes	1

Height	Et	L1	L2	L3	Eb	Installation Dwg.
27 1/2	1 1/2	n/a	15 3/8	23 5/8	3 7/8	2
35 1/2	1 1/2	n/a	19 3/8	31 5/8	3 7/8	2
43 1/2	1 1/2	n/a	23 3/8	39 5/8	3 7/8	2
47 1/2	1 1/2	n/a	25 3/8	43 5/8	3 7/8	2
51 1/2	1 1/2	n/a	27 3/8	47 5/8	3 7/8	2
59 1/2	1 1/2	n/a	31 3/8	55 5/8	3 7/8	2
71 1/2	1 1/2	19 3/8	43 3/8	67 5/8	3 7/8	1
83 1/2	1 1/2	31 3/8	55 3/8	79 5/8	3 7/8	1

Series 2000

Commodity

Width	Eh / Es	Centerline of Head & Sill (yes/no)	Installation Dwg.
18 1/8	4	no	2
25 1/2	4	no	2
29 1/2	4	no	2
36	4	no	2
41	4	yes	1
47	4	yes	1
52 1/8	4	yes	1

Height	Et	L1	L2	L3	Eb	Installation Dwg.
25	2	n/a	14 1/2	20 1/2	4 1/2	2
37 3/8	2	n/a	20 1/2	33	4 1/2	2
49 5/8	2	n/a	26 1/2	45	4 1/2	2
55 1/4	2	n/a	29 1/2	51	4 1/2	2
62	2	16	32 1/2	57 1/2	4 1/2	1
71	2	26	41 1/2	66 1/2	4 1/2	1
83	2	26	53 1/2	78 1/2	4 1/2	1

Modular

Width	Eh / Es	Centerline of Head & Sill (yes/no)	Installation Dwg.
23 1/2	4	no	2
27 1/2	4	no	2
31 1/2	4	no	2
35 1/2	4	no	2
39 1/2	4	yes	1
43 1/2	4	yes	1
47 1/2	4	yes	1

Height	Et	L1	L2	L3	Eb	Installation Dwg.
27 1/2	2	n/a	15 1/2	23	4 1/2	2
35 1/2	2	n/a	19 1/2	31	4 1/2	2
43 1/2	2	n/a	23 1/2	39	4 1/2	2
47 1/2	2	n/a	25 1/2	43	4 1/2	2
51 1/2	2	n/a	27 1/2	47	4 1/2	2
59 1/2	2	n/a	31 1/2	55	4 1/2	2
71 1/2	2	26	43 1/2	67	4 1/2	1
83 1/2	2	26	55 1/2	79	4 1/2	1

Fastener Location Table Notes:

1) All dimensions shown taken from the buck width or height of the window frame.
2) Based on the Milestone Series No. and size of the window to be installed, enter the correct table above to determine the locations of the No. 8 Wood or Tapping Screws based on either Installation No. 1 or No. 2 illustrations at right. The applicable installation illustration is noted in the table.
[illegible] table as "yes". If "no", an installation fastener is not required at the centerline of the head and sill.
5) This table is NOT applicable to the nailing option. See Notes O, P, Q, and R for nail installation locations and spacing.

DESIGN PRESSURE RATING & FBC CODE COMPLIANCE

(S) If exact window size is not listed in fastener location table, use fastener locations listed for next larger size.

(T) Installations depicted in these instructions acceptable for design pressures to 70 PSF for the window sizes shown in the table. Design Pressures (D.P.) are positive and negative. Overall window assembly design pressure may be less than 70 PSF and shall be determined in accordance with Note 13 of FLEX20100.

(U) Production Glazing may differ from that tested as allowed by ANSI/AAMA/NWWDA 101/I.S. 2, 101/I.S. 2/NAFS or AAMA/WDMA/CSA 101/I.S. 2/A440 and applicable Building Code. See Note 12 and 13 on Drawing FLEX 20100 for further details.

(V) Structural two by wood buck and/or framing at the head, sill and jambs to be securely fastened to transfer the load to the wood structural substrate per the FBC and the engineer of record's details as applicable.

(V) See FLEX20100, Notes 10 to 15 for additional FBC Code Compliance.

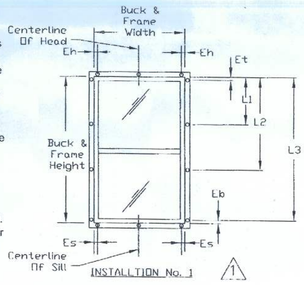

INSTALLTION No. 1

Window Size Applicability
>36" to 52-1/8" Wide at Head & Sill
>59-1/2" to 83-1/2" High at Jambs

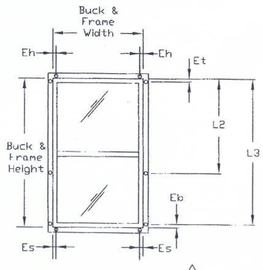

Window Size Applicability
>36" to 36" Wide at Head & Sill
>59-1/2" to 59-1/2" High at Jambs

Drawing No. FLEX21120
Sheet 2 of 2

Florida Extruders Int'l., Inc.
2540 Jewett Lane - Sanford, FL 32771
407-323-3300 - 407-322-3507 (fax)
www.floridaextruders.com
Florida CGA No. 9235

TITLE: Milestone Series 1000, 1500 & 2000 Non-Impact Resistant Aluminum Fin Frame Single Hung Window Installation Drawing for Wood Substrate with Wood Screws or Nails

No.	Date	By	Description
0	12/27/05	RJA	Supersedes FLEX0005
1	11/10/06	RJA	Revised Anchorage

Date: 11/10/06
Scale: NTS
Drawn By: RJA
Checked By: JH

Florida Product Approval # FL9262

SINGLE HUNG

SHEET: WINf

FLORIDA EXTRUDERS
WINDOWS IN FRAME
1 of 7
RELEASE DATE: 09/03/08

COPYRIGHT © 2002 MARONDA HOMES

Maronda Homes
(407) 321-0064 4005 MARONDA WAY SANFORD, FLORIDA

REVISIONS :
2-16-09 Updated to Code.

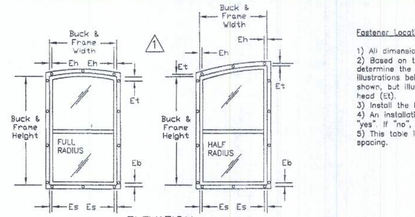

FULL AND HALF RADIUS HEAD WINDOWS

Fastener Location Tables (Sheet 3 and 4) are applicable to Full and Half Radius Head SH Windows shown above. Fastener edge distances shown above are applicable to Full and Half Radius Head SH Windows. For intermediate head, sill and jamb fasteners located between edge fasteners, see Installation Illustrations below.

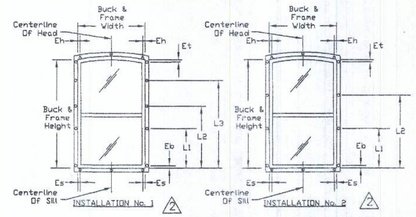

Installation Illustrations No. 1, 2 and 3 Showing Locations of Wood Screw Fasteners

See table on Sheet 3 for Series 1000 & 1500 Commodity and Modular Window Sizes

See table on Sheet 4 for Series 2000 Commodity and Modular Window Sizes

Fastener Location Table Notes (See Sheets 3 and 4 for Tables):

1) All dimensions shown taken from the buck width or height of the window frame.
2) Based on the Milestone Series No. and size of the window to be installed, enter the correct table above to determine the locations of the No. 8 Wood or Tapping Screws based on either Installation No. 1, No. 2 or No. 3 illustrations below. The applicable installation illustration is noted in the table. The full radius head frame is shown, but illustrations also applicable to half radius head window (see elevation for edge distances at frame head (Et).
3) Install the No. 8 Wood or Tapping Screws at the locations shown in the table. Tolerance is + / 1 1".
4) An installation fastener is only required at the centerline of the head and sill when indicated in the table as "yes". If "no", an installation fastener is not required at the centerline of the head and sill.
5) This table is NOT applicable to the nailing option. See Notes O, P, Q, and R for nail installation locations and spacing.

DESIGN PRESSURE RATING & FBC CODE COMPLIANCE

(S) If exact window size is not listed in fastener location table, use fastener locations listed for next larger size.
(T) Installations depicted in these instructions acceptable for design pressures to 70 PSF for the window sizes shown in the table. Design Pressures (D.P.) are positive and negative. Overall window assembly design pressure may be less than 70 PSF and shall be determined in accordance with Note 13 of FLEX22100.
(U) Production Glazing may differ from that tested as allowed by AAMA/WDMA/CSA 101/I.S. 2, 101/I.S. 2/A440 or AAMA/WDMA/CSA 101/I.S. 2/A440 and applicable Building Code. See Note 12 and 13 on Drawing FLEX 20100 for further details.
(V) Structural box by wood back and/or framing at the head, sill and jamb to be securely fastened to transfer the load to the wood structural substrate per the FBC and the engineer of record's details as applicable.
(W) See FLEX20100, Notes 10 to 15 for additional FBC Code Compliance.

Drawing No. FLEX22120
Sheet 2 of 4

Florida Extruders Int'l, Inc.
2450 Sweet Lane - Sanford, FL 32771
407-323-1300 - 407-323-7507 (fax)
www.flex-ext.com
Florida COA No. 9325

TITLE: Milestone Series 1000, 1500 & 2000 Non-Impact Stainless Aluminum Fin Frame Radius Head Single Hung Window Installation Drawing for Wood Substrate with Wood Screws or Nails

REVISIONS			
No.	Date	By	Description
1	1/30/06	KJA	Specimen Fabricated
2	11/10/06	KJA	Revised Drawings
3	1/22/07	KJA	Editorial Corrections

Date: 3/02/07
Scale: NTS
Drawn By: KJA
Checked By: JH

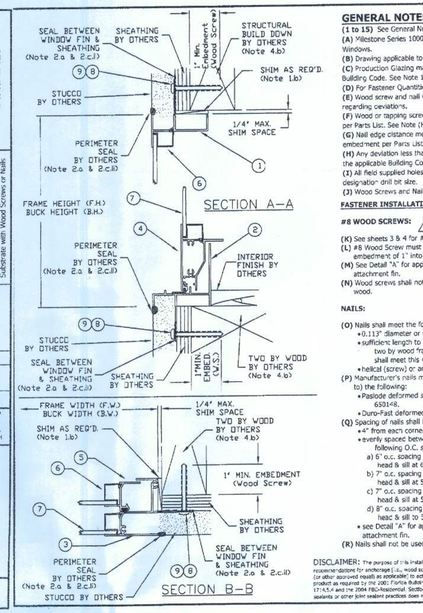

GENERAL NOTES

(1 to 15) See General Notes Drawing FLEX20100, Sheet 1 & 2.
(A) Milestone Series 1000 Single Hung Radius Head Aluminum Window is shown. Also applicable to Milestone Series 1500 and 2000 Single Hung Radius Head Aluminum Windows.
(B) Drawing applicable to Non-Impact Resistant glazed windows.
(C) Production Glazing may differ from that tested as allowed by ANSI/AAMA/NWWDA 101/I.S. 2, 101/I.S. 2/A440 or AAMA/WDMA/CSA 101/I.S. 2/A440 and applicable Building Code. See Note 12 and 13 on Drawing FLEX 20100 for further details.
(D) For Fastener Quantities and Gauge see Sheet 3 & 4 of this drawing. See Note (H) regarding deviations.
(E) Wood screw and nail withdrawal values used to generate the fastening requirements are based on SPF with a Specific Gravity of 0.50. See Note (H) regarding deviations.
(F) Wood or tapping screw edge distance measured from edge of wood to centerline of wood or tapping screw must meet or exceed 1". Minimum size and embedment per Parts List. See Note (H) regarding deviations.
(G) Nail edge distance measured from edge of wood to centerline of nail must meet or exceed 9/16" or Shank Diameter, whichever is larger. Minimum size and embedment per Parts List. See Note (H) regarding deviations.
(H) Any deviation less than the minimum requirements stated must be approved by the manufacturer or certified by "other" Design Professional in accordance with the applicable Building Code and Product Approval.
(I) All field supplied holes in the frame (if required) will be 3/16" in diameter for #8 wood screws or the diameter of the nail rounded up to the next standard designation drill bit size.
(J) Wood Screws and Nails SHALL NOT be mixed to fasten the same assembly.

FASTENER INSTALLATION INSTRUCTIONS - FLEX22120

#8 WOOD SCREWS:

(K) See sheets 3 & 4 for #8 Wood Screw installation fastener chart.
(L) #8 Wood Screw must be of sufficient length to achieve minimum embedment of 1" into the two by wood framing.
(M) See Detail "A" for approximate location of the wood screw on the attachment fin.
(N) Wood screws shall not be used to fastener assembly into end grain of wood.

NAILS:

(O) Nails shall meet the following requirements:
- 0.113" diameter or greater,
- sufficient length to achieve minimum embedment of 1 7/8" into the two by wood framing (generally, nail 2 3/8" length or greater shall meet this requirement), and
- helical (screw) or annular (ring) shank style only.

(P) Manufacturer's nails meeting these requirements are (but not limited to) the following:
- Paslode deformed shank nail, No. 404947, 404537, 650111 and 650146.
- Duro-Fast deformed shank nail No. 325.

(Q) Spacing of nails shall be:
- 4" from each corner of the head, sill and jambs, and
- evenly spaced between corner fasteners and not exceeding the following O.C. spacing
  - a) 5" o.c. spacing for the jambs & 8" o.c. spacing for the head & sill at 61 PSF to 70 PSF, or
  - b) 7" o.c. spacing for the jambs & 9" o.c. spacing for the head & sill at 56 PSF to 60 PSF, or
  - c) 7" o.c. spacing for the jambs & 11" o.c. spacing for the head & sill at 51 PSF to 55 PSF, or
  - d) 8" o.c. spacing for the jambs & 13" o.c. spacing for the head & sill to 50 PSF.
- see Detail "A" for approximate location of the nail on the attachment fin.

(R) Nails shall not be used to fasten assembly into end grain of wood.

DISCLAIMER: The purpose of this installation drawing is to present the manufacturer's recommendations for anchorage (i.e., wood screws, security screws, nails and volume Structural Adhesive (or other approved equals as applicable)) to achieve the design pressure specified on the Revelstoke product as required by the 2001 Florida Building Code, Section 1626.1 (Wind Loads), Section 1710.1 (Glass), Section 1710.5.1 and the 2004 FBC-Residential, Section R301.1.1. The recommendations contained in this drawing, warranty or other joint contract practices does not constitute a warranty either expressed or implied.

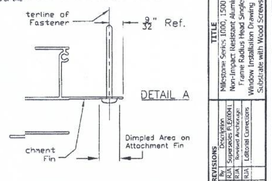

PARTS LIST

1 Head - Fin Frame
2 Sill - Fin Frame
3 Jamb - Fin Frame
4 Lift Rail - Sash
5 Jamb - Sash
6 Glazing Bead - Rigid
7 Glazing - See Note (C)
8 #8 Pan Head Wood Screw with a minimum embedment into the structural wood substrate. See Note 2 Detail A on this drawing and Note on Drawing FLEX20100.
9 Round Head Deformed Shank Nail with minimum 0.113" diameter (1 7/8" minimum) and minimum embedment of 1-7/8" into the structural wood substrate. See Note 2 Detail A on this drawing and Notes on Drawing FLEX20100.

Robert J. Amoroso, P.E.
FL License No. 49712
ROBERT JAMES AMOROSO LICENSE NO. 49712 STATE OF FLORIDA PROFESSIONAL ENGINEER
3/8/07

Drawing No. FLEX22120
Sheet 1 of 4

REVISIONS :
2-16-09 Updated to Code.

COPYRIGHT © 2002 MARONDA HOMES

Maronda Homes
(407) 321-0064 4005 MARONDA WAY SANFORD, FLORIDA

FLORIDA EXTRUDERS
WINDOWS IN FRAME
2 of 7
RELEASE DATE: 09/03/08

SHEET: WINf

No. 8 Wood and Tapping Screw Fastener Location Tables – Series 1000 & 1500 Single Hung Full and Half Radius Head Windows

Series 1000 & 1500 Half Radius and Full Radius Head SH Windows

Modular Cell Size		Buck Width and Height									
	Width	Height (Full Radius)	Height (Half Radius)	Eh/Es	Centerline of Head (yes/no)	Et	No. 8 Wood Screw Locations Et	Eb	L1	L2	L3	Installation No.
2024	23 1/2	28 25/32	30 23/32	4	no	1 1/2	1 1/2	3 7/8	12 1/8	—	—	3
2030	23 1/2	36 25/32	38 23/32	4	no	1 1/2	1 1/2	3 7/8	16 1/8	—	—	3
2036	23 1/2	44 25/32	46 23/32	4	no	1 1/2	1 1/2	3 7/8	20 1/8	—	—	3
2042	23 1/2	49 25/32	50 23/32	4	no	1 1/2	1 1/2	3 7/8	20 1/8	—	—	3
2044	23 1/2	52 25/32	54 23/32	4	no	1 1/2	1 1/2	3 7/8	22 1/8	—	—	3
2050	23 1/2	60 25/32	62 23/32	4	no	1 1/2	1 1/2	3 7/8	24 1/8	—	—	3
2060	23 1/2	72 25/32	74 23/32	4	no	1 1/2	1 1/2	3 7/8	29 3/8	54 5/8	—	2
2072	23 1/2	83 1/2	83 1/2	4	no	1 1/2	1 1/2	3 7/8	29 3/8	54 5/8	—	2
2424	27 1/2	29 3/32	31 13/32	4	no	1 1/2	1 1/2	3 7/8	29 3/8	54 5/8	—	2
2430	27 1/2	37 3/32	39 13/32	4	no	1 1/2	1 1/2	3 7/8	12 1/8	—	—	3
2436	27 1/2	45 3/32	47 13/32	4	no	1 1/2	1 1/2	3 7/8	16 1/8	—	—	3
2442	27 1/2	49 3/32	51 13/32	4	no	1 1/2	1 1/2	3 7/8	20 1/8	—	—	3
2444	27 1/2	53 3/32	55 13/32	4	no	1 1/2	1 1/2	3 7/8	22 1/8	—	—	3
2450	27 1/2	61 3/32	63 13/32	4	no	1 1/2	1 1/2	3 7/8	24 1/8	—	—	3
2460	27 1/2	73 3/32	75 13/32	4	no	1 1/2	1 1/2	3 7/8	29 3/8	54 5/8	—	2
2470	27 1/2	83 1/2	83 1/2	4	no	1 1/2	1 1/2	3 7/8	29 3/8	54 5/8	—	2
2824	31 1/2	29 7/16	32 1/16	4	no	1 1/2	1 1/2	3 7/8	29 3/8	54 5/8	—	2
2830	31 1/2	37 7/16	40 1/16	4	no	1 1/2	1 1/2	3 7/8	12 1/8	—	—	3
2836	31 1/2	45 7/16	48 1/16	4	no	1 1/2	1 1/2	3 7/8	16 1/8	—	—	3
2840	31 1/2	49 7/16	52 1/16	4	no	1 1/2	1 1/2	3 7/8	20 1/8	—	—	3
2844	31 1/2	53 7/16	56 1/16	4	no	1 1/2	1 1/2	3 7/8	22 1/8	—	—	3
2850	31 1/2	61 7/16	64 1/16	4	no	1 1/2	1 1/2	3 7/8	24 1/8	—	—	3
2860	31 1/2	73 7/16	76 1/16	4	no	1 1/2	1 1/2	3 7/8	29 3/8	54 5/8	—	2
2870	31 1/2	83 1/2	83 1/2	4	no	1 1/2	1 1/2	3 7/8	29 3/8	54 5/8	—	2
3024	35 1/2	29 25/32	32 23/32	4	no	1 1/2	1 1/2	3 7/8	29 3/8	54 5/8	—	2
3030	35 1/2	37 25/32	40 23/32	4	no	1 1/2	1 1/2	3 7/8	12 1/8	—	—	3
3036	35 1/2	45 25/32	48 23/32	4	no	1 1/2	1 1/2	3 7/8	16 1/8	—	—	3
3040	35 1/2	49 25/32	52 23/32	4	no	1 1/2	1 1/2	3 7/8	20 1/8	—	—	3
3044	35 1/2	53 25/32	56 23/32	4	no	1 1/2	1 1/2	3 7/8	22 1/8	—	—	3
3050	35 1/2	61 25/32	64 23/32	4	no	1 1/2	1 1/2	3 7/8	24 1/8	—	—	3
3060	35 1/2	73 25/32	76 23/32	4	no	1 1/2	1 1/2	3 7/8	29 3/8	54 5/8	—	2
3070	35 1/2	83 1/2	83 1/2	4	no	1 1/2	1 1/2	3 7/8	29 3/8	54 5/8	—	2
3424	39 1/2	30 3/32	32 13/32	4	yes	1 1/2	1 1/2	3 7/8	29 3/8	54 5/8	—	2
3430	39 1/2	38 3/32	41 13/32	4	yes	1 1/2	1 1/2	3 7/8	12 1/8	—	—	3
3436	39 1/2	46 3/32	49 13/32	4	yes	1 1/2	1 1/2	3 7/8	16 1/8	—	—	3
3440	39 1/2	50 3/32	53 13/32	4	yes	1 1/2	1 1/2	3 7/8	20 1/8	—	—	3
3444	39 1/2	54 3/32	57 13/32	4	yes	1 1/2	1 1/2	3 7/8	22 1/8	—	—	3
3450	39 1/2	62 3/32	65 13/32	4	yes	1 1/2	1 1/2	3 7/8	24 1/8	—	—	3
3460	39 1/2	74 3/32	77 13/32	4	yes	1 1/2	1 1/2	3 7/8	29 3/8	54 5/8	—	2
3470	39 1/2	n/a	n/a	n/a	n/a	n/a	n/a	n/a	n/a	n/a	n/a	2
3834	43 1/2	30 7/16	34 1/16	4	yes	1 1/2	n/a	n/a	n/a	n/a	n/a	n/a
3836	43 1/2	38 7/16	42 1/16	4	yes	1 1/2	1 1/2	3 7/8	12 1/8	—	—	3
3838	43 1/2	46 7/16	50 1/16	4	yes	1 1/2	1 1/2	3 7/8	16 1/8	—	—	3
3840	43 1/2	50 7/16	54 1/16	4	yes	1 1/2	1 1/2	3 7/8	20 1/8	—	—	3
3844	43 1/2	54 7/16	58 1/16	4	yes	1 1/2	1 1/2	3 7/8	22 1/8	—	—	3
3850	43 1/2	62 7/16	66 1/16	4	yes	1 1/2	1 1/2	3 7/8	24 1/8	—	—	3
3860	43 1/2	74 7/16	78 1/16	4	yes	1 1/2	1 1/2	3 7/8	29 3/8	54 5/8	—	2
3870	43 1/2	n/a	n/a	n/a	n/a	n/a	n/a	n/a	n/a	n/a	n/a	2
4024	47 1/2	29 25/32	34 23/32	4	yes	1 1/2	n/a	n/a	n/a	n/a	n/a	n/a
4030	47 1/2	38 25/32	42 23/32	4	yes	1 1/2	1 1/2	3 7/8	12 1/8	—	—	3
4036	47 1/2	46 25/32	50 23/32	4	yes	1 1/2	1 1/2	3 7/8	16 1/8	—	—	3
4040	47 1/2	50 25/32	54 23/32	4	yes	1 1/2	1 1/2	3 7/8	20 1/8	—	—	3
4044	47 1/2	54 25/32	58 23/32	4	yes	1 1/2	1 1/2	3 7/8	22 1/8	—	—	3
4050	47 1/2	62 25/32	66 23/32	4	yes	1 1/2	1 1/2	3 7/8	24 1/8	—	—	3
4060	47 1/2	74 25/32	78 23/32	4	yes	1 1/2	1 1/2	3 7/8	29 3/8	54 5/8	—	2
4070	47 1/2	n/a	n/a	n/a	n/a	n/a	n/a	n/a	n/a	n/a	n/a	n/a

See Sheet 2 for Fastener Installation Illustrations showing locations of fastener spacing dimensions Et, Eb, Eh, Es, L1, L2, L3 and centerline of head/sill requirements shown in the tables above.

No. 8 Wood and Tapping Screw Fastener Location Tables – Series 1000 & 1500 Single Hung Full and Half Radius Head Windows

Series 1000 & 1500 Half Radius and Full Radius Head SH Windows

Commodity Cell Size	Buck Width and Height											
	Width	Height (Full Radius)	Height (Half Radius)	Eh/Es	Centerline of Head (yes/no)	Et	No. 8 Wood Screw Locations Et	Eb	L1	L2	L3	Installation No.
12	18 1/8	25 13/16	27 5/16	4	no	1 1/2	1 1/2	3 7/8	12 1/8	—	—	3
13	18 1/8	38 3/16	39 11/16	4	no	1 1/2	1 1/2	3 7/8	20 1/4	—	—	3
14	18 1/8	50 7/16	51 15/16	4	no	1 1/2	1 1/2	3 7/8	23 1/4	—	—	3
14S	18 1/8	56 1/16	57 9/16	4	no	1 1/2	1 1/2	3 7/8	26	—	—	3
15	18 1/8	62 13/16	64 5/16	4	no	1 1/2	1 1/2	3 7/8	29 3/8	54 5/8	—	2
16	18 1/8	71 13/16	73 5/16	4	no	1 1/2	1 1/2	3 7/8	29 3/8	54 5/8	—	2
17	18 1/8	83	83	4	no	1 1/2	1 1/2	3 7/8	29 3/8	54 5/8	—	2
1H2	25 1/2	26 7/16	28 9/16	4	no	1 1/2	1 1/2	3 7/8	13 7/8	—	—	3
1H3	25 1/2	38 13/16	40 15/16	4	no	1 1/2	1 1/2	3 7/8	20 1/4	—	—	3
1H4	25 1/2	51 1/16	53 3/16	4	no	1 1/2	1 1/2	3 7/8	23 1/4	—	—	3
1H4S	25 1/2	56 11/16	58 13/16	4	no	1 1/2	1 1/2	3 7/8	26 1/2	—	—	3
1H5	25 1/2	63 7/16	65 9/16	4	no	1 1/2	1 1/2	3 7/8	29 3/8	54 5/8	—	2
1H6	25 1/2	72 7/16	74 9/16	4	no	1 1/2	1 1/2	3 7/8	29 3/8	54 5/8	—	2
1H7	25 1/2	83	83	4	no	1 1/2	1 1/2	3 7/8	29 3/8	54 5/8	—	2
3H2	29 1/2	26 13/16	29 11/48	4	no	1 1/2	1 1/2	3 7/8	13 7/8	—	—	3
3H3	29 1/2	39 13/16	41 23/48	4	no	1 1/2	1 1/2	3 7/8	20 1/4	—	—	3
3H4	29 1/2	51 37/96	53 41/48	4	no	1 1/2	1 1/2	3 7/8	23 1/4	—	—	3
3H4S	29 1/2	57 1/96	59 23/48	4	no	1 1/2	1 1/2	3 7/8	27	—	—	3
3H5	29 1/2	63 73/96	66 11/48	4	no	1 1/2	1 1/2	3 7/8	29 3/8	54 5/8	—	2
3H6	29 1/2	72 73/96	75 11/48	4	no	1 1/2	1 1/2	3 7/8	29 3/8	54 5/8	—	2
3H7	29 1/2	83 1/96	82 47/48	4	no	1 1/2	1 1/2	3 7/8	29 3/8	54 5/8	—	2
22	36	27 5/16	30 5/16	4	no	1 1/2	1 1/2	3 7/8	20 1/4	—	—	3
23	36	39 1/16	42 11/16	4	no	1 1/2	1 1/2	3 7/8	20 1/4	—	—	3
24	36	51 13/16	54 15/16	4	no	1 1/2	1 1/2	3 7/8	23 1/4	—	—	3
24S	36	57 9/16	60 5/16	4	no	1 1/2	1 1/2	3 7/8	26	—	—	3
25	36	64 5/16	67 5/16	4	no	1 1/2	1 1/2	3 7/8	29 3/8	54 5/8	—	2
26	36	73 5/16	76 5/16	4	no	1 1/2	1 1/2	3 7/8	29 3/8	54 5/8	—	2
27	36	83	83	4	no	1 1/2	1 1/2	3 7/8	29 3/8	54 5/8	—	2
48J	47	28 7/32	32 5/32	4	yes	1 1/2	1 1/2	3 7/8	12 7/8	—	—	3
48J	47	40 19/32	44 17/32	4	yes	1 1/2	1 1/2	3 7/8	20 1/4	—	—	3
48J	47	52 27/32	56 25/32	4	yes	1 1/2	1 1/2	3 7/8	24 1/4	—	—	3
48J5	47	58 15/32	62 13/32	4	yes	1 1/2	1 1/2	3 7/8	29 3/8	—	—	3
48S	47	65 1/32	68 5/32	4	yes	1 1/2	1 1/2	3 7/8	29 3/8	54 5/8	—	2
48S	47	74 7/32	78 5/32	4	yes	1 1/2	1 1/2	3 7/8	29 3/8	54 5/8	—	2
48T	47	83	83	4	yes	1 1/2	1 1/2	3 7/8	29 3/8	54 5/8	—	2
32	52 1/8	28 21/32	33	4	yes	1 1/2	1 1/2	3 7/8	10 7/8	—	—	3
33	52 1/8	41 1/32	45 12/32	4	yes	1 1/2	1 1/2	3 7/8	20 1/4	—	—	3
34	52 1/8	53 9/32	57 22/32	4	yes	1 1/2	1 1/2	3 7/8	23 1/4	—	—	3
34S	52 1/8	58 29/32	63 9/32	4	yes	1 1/2	1 1/2	3 7/8	29 3/8	48	—	2
35	52 1/8	65 21/32	70	4	yes	1 1/2	1 1/2	3 7/8	29 3/8	54 5/8	—	2
36	52 1/8	74 21/32	79	4	yes	1 1/2	1 1/2	3 7/8	29 3/8	54 5/8	—	2
37	n/a	n/a	n/a	n/a	n/a	n/a	n/a	n/a	n/a	n/a	n/a	n/a

Fastener Location Table Notes:

1) All dimensions shown taken from the buck width or height of the window frame.
2) Based on the Milestone Series No. and size of the window to be installed, enter the correct table above to determine the locations of the No. 8 Wood or Tapping Screws based on either Installation No. 1, No. 2 or No. 3 illustrations on Sheet 2. The applicable installation illustration is noted in the table. The full radius head frame is shown, but illustrations also applicable to half radius head window (see elevation for edge distances at frame head (Et).
3) Install the No. 8 Wood or Tapping Screws at the locations shown in the table. Tolerance is +/– 1
4) An installation fastener is only required at the centerline of the head and sill when indicated in the table as "yes". If "no", an installation fastener is not required at the centerline of the head and sill.
5) This table is NOT applicable to the nailing option. See Notes O, P, Q, and R for nail installation locations and spacing.

Drawing No. FLEX22120
Sheet 3 of 4

Florida Extruders Int'l, Inc.
2450 Sweet Lane - Sanford, FL 32771
407-323-1300 - 407-323-7507 (fax)
www.flex-ext.com
Florida COA No. 9325

TITLE: Milestone Series 1000, 1500 & 2000 Non-Impact Stainless Aluminum Fin Frame Radius Head Single Hung Window Installation Drawing for Wood Substrate with Wood Screws or Nails

REVISIONS			
No.	Date	By	Description
1	1/30/06	KJA	Specimen Fabricated
2	11/10/06	KJA	Revised Drawings
3	1/22/07	KJA	Editorial Corrections

Date: 3/02/07
Scale: NTS
Drawn By: KJA
Checked By: JH

Florida Product Approval # FL9262

SINGLE HUNG

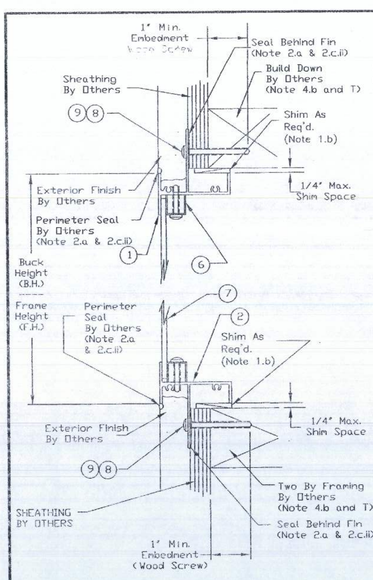

SECTION A-A

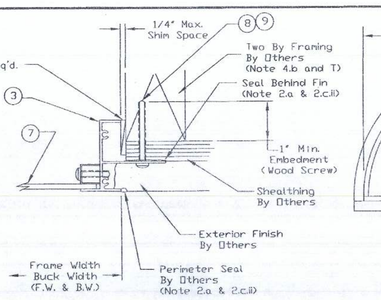

SECTION B-B

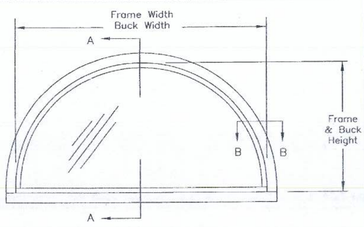

EXTERIOR ELEVATION

PARTS LIST

1. Head - FinFrame
2. Sill - Fin Frame
3. Jamb - Fin Frame
4. Not Used
5. Not Used
6. Glazing Bead - Rigid Vinyl
7. Glazing - See Note (B) and (C)
8. #8 Pan Head Wood or Tapping Screw with a minimum embedment of 1" into the structural wood substrate. See Note (K) on Sheet 2 and Detail A on this drawing and Note 4.b & 8 on Drawing FLEX20100.
9. Round Head Deformed Shank Nail with minimum 0.113" diameter (11 GA) and minimum embedment of 1-7/8" into the structural wood substrate. See Note (N) on Sheet 2 and Detail A on this drawing and Notes 4.b & 9 on Drawing FLEX20100.

GENERAL NOTES

(1 to 15) See General Notes Drawing FLEX20100, Sheet 1 & 2.
(A) Milestone Series 1000 Designer Fixed Aluminum Window is shown. Also applicable to Series 2000 Designer Fixed Aluminum Windows.
(B) Drawing applicable to Non-Impact Resistant glazed windows.
(C) Production Glazing may differ from that tested as allowed by ANSI/AAMA/NWWDA 101/I.S. 2, 101/I.S. 2/NAFS or AAMA/WDMA/CSA 101/I.S. 2/A440 and applicable Building Code. See Note 12 and 13 on Drawing FLEX 20100 for further details.
(D) For Fastener Spacing see Notes (L) and (P) on Sheet 2 of this drawing. See Note (H) regarding deviations.
(E) Wood screw and nail withdrawal values used to generate the fastening requirements are based on Spruce-Pine-Fur with a Specific Gravity of 0.50. See Note (H) regarding deviations.
(F) Wood or tapping screw edge distance measured from edge of wood to centerline of wood or tapping screw must meet or exceed 1". Minimum size and embedment per Parts List. See Note (H) regarding deviations.
(G) Nail edge distance measured from edge of wood to centerline of nail must meet or exceed 9/16" or 5 times Shank Diameter, whichever is larger. Minimum size and embedment per Parts List. See Note (H) regarding deviations.
(H) Any deviation less than the minimum requirements stated must be approved by the manufacturer or engineered by "other" Design Professional in accordance with the applicable Building Code and Product Approval.
(I) All field supplied holes in the frame (if required) will be 3/16" in diameter for #8 wood screws or the shank diameter of the nail rounded up to the next standard designation drill bit size.
(J) Wood Screws and Nails SHALL NOT be mixed to fasten the same assembly.

DISCLAIMER: The purpose of this installation drawing is to present the manufacturer's recommendations for anchorage [i.e., wood screws, tapping screws and nails] to achieve the design pressure specified on the fenestration product as required by the 2001 Florida Building Code (FBC), Section 1707.4.4, 2004 FBC-Building, Section 1714.5.4 and the 2004 FBC-Residential, Section R613.6. Recommendations regarding flashing, sealing, sealants or other joint sealant practices does not constitute a warranty either expressed or implied.

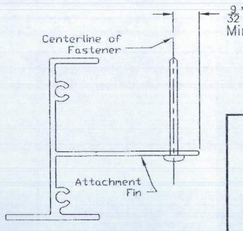

Wood Screw or Nail Head must be in full contact with Attachment Fin. Centerline of fastener shall be approximately 9/32" from edge of Attachment Fin.

DETAIL A

Robert J. Amoruso, P.E.
FL License No. 49752

ROBERT JAMES AMORUSO LICENSE No. 49752 STATE OF FLORIDA PROFESSIONAL ENGINEER 1-9-07

Drawing No. FLEX28120
Sheet 1 of 2

Florida Extruders Int'l., Inc.
2540 Jewett Lane - Sanford, FL 32771
407-323-3300 - 407-322-3507 (fax)
www.floridaext.com
Florida COA No. 9235

TITLE: Milestone Series 1000 & 2000 Non-Impact Resistant Aluminum Fin Frame Designer Fixed Window Installation Drawing for Wood Substrate with Wood Screws or Nails

REVISIONS			
No.	Date	By	Description
0	12/27/05	RJA	Supersedes FL20037
1	11/14/06	RJA	Revised Anchorage
2	1/9/07	RJA	Revised dpi-drawing numbers

Date: 1/9/07
Scale: NTS
Drawn By: RJA
Checked By: JH

Florida Product Approval # FL9242

FIXED

FASTENER INSTALLATION INSTRUCTIONS - FLEX28120

#8 WOOD SCREWS:

(K) #8 Wood Screw must be of sufficient length to achieve minimum embedment of 1" into the two by wood framing or the build-down framing component.
(L) #8 Wood Screw spacing shall be as follows:
- 4-1/2" maximum from each corner of head, sill or jambs,
- evenly spaced between corner fasteners but not exceeding 18" o.c. spacing in head, sill or jambs for the following configurations at design pressures to 70 PSF,
  - eyebrow
  - half-circle arch
  - half-eyebrow
  - octagon
  - fan
  - pentoid
  - full-circle
  - half-circle
  - triangle
  - trapezoid
  - oval
- evenly spaced between corner fasteners but not exceeding 15" o.c. spacing in head, sill or jambs for the following configurations at design pressures to 70 PSF,
  - quarter-circle
  - quarter-circle arch
  - half-fan
- tolerance is +/- 1", and
- this tolerance is applicable to the evenly spaced distance. (2)
- Corner distance measured from frame/buck width or height dimension of frame.

(M) Wood screws shall not be used to fasten assembly into end grain of wood.

NAILS:

(N) Nails shall meet the following requirements:
- 0.113" diameter or greater,
- sufficient length to achieve minimum embedment of 1 7/8" into the two by wood or build-down framing (generally, nail 2 3/8" length or greater shall meet this requirement), and
- helical (screw) or annular (ring) shank style only.

(O) Manufacturer's nails meeting these requirements are (but not limited to) the following:
- Paslode deformed shank nail, No. 404917, 404537, 650111 and 650148.
- Duro-Fast deformed shank nail No. 325.

(P) Spacing of nails shall be:
- 4-1/2" maximum from each corner of the head, sill and jambs,
- evenly spaced between corner fasteners but not exceeding the o.c. spacing in head, sill and jambs for the following configurations at design pressures 46 to 70 PSF,

eyebrow	5" o.c. spacing
half-eyebrow	5" o.c. spacing
fan	6" o.c. spacing
half-fan	4" o.c. spacing
half-circle arch	6" o.c. spacing
quarter-circle	4" o.c. spacing
quarter-circle arch	4" o.c. spacing
oval	12" o.c. spacing
octagon	7" o.c. spacing
pentoid	5" o.c. spacing
triangle	5" o.c. spacing
trapezoid	5" o.c. spacing

(P) Spacing of nails shall be (continued):
- evenly spaced between corner fasteners but not exceeding the o.c. spacing in head, sill and jambs for the following configurations at design pressures to 45 PSF,

eyebrow	9" o.c. spacing
half-eyebrow	9" o.c. spacing
fan	9" o.c. spacing
half-fan	7" o.c. spacing
full-circle	11" o.c. spacing
half-circle	9" o.c. spacing
half-circle arch	9" o.c. spacing
quarter-circle	7" o.c. spacing
quarter-circle arch	7" o.c. spacing
oval	17" o.c. spacing
octagon	11" o.c. spacing
pentoid	9" o.c. spacing
triangle	9" o.c. spacing
trapezoid	9" o.c. spacing

- tolerance is +/- 1", and
- this tolerance is applicable to the evenly spaced distance. (2)
- Corner distance measured from frame/buck width or height dimension of frame.

(Q) Nails shall not be used to fasten assembly into end grain of wood.

DESIGN PRESSURE RATING & FBC CODE COMPLIANCE

(R) Installations depicted in these instructions acceptable for design pressures to 70 PSF with fastener spacing in Notes (L) and (P). Design Pressures (D.P.) are positive and negative. Overall window assembly design pressure may be less than 70 PSF and shall be determined in accordance with Note 13 of FLEX20100.
(S) Production Glazing may differ from that tested as allowed byANSI/AAMA/NWWDA 101/I.S. 2, 101/I.S. 2/NAFS or AAMA/WDMA/CSA 101/I.S. 2/A440 and applicable Building Code. See Note 12 and 13 on Drawing FLEX 20100 for further details.
(T) Structural two by wood and/or framing at the head, sill and jambs to be securely fastened to transfer the load to the wood structural substrate per the FBC and the engineer of record's details as applicable.
(U) See FLEX20100, Notes 10 to 15 for additional FBC Code Compliance.

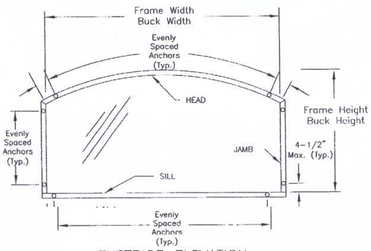

EXTERIOR ELEVATION

ANCHOR SPACING ILLUSTRATION
EYEBROW ARCH DESIGNER WINDOW

Drawing No. FLEX28120
Sheet 2 of 2

Florida Extruders Int'l., Inc.
2540 Jewett Lane - Sanford, FL 32771
407-323-3300 - 407-322-3507 (fax)
www.floridaext.com
Florida COA No. 9235

TITLE: Milestone Series 1000 & 2000 Non-Impact Resistant Aluminum Fin Frame Designer Fixed Window Installation Drawing for Wood Substrate with Wood Screws or Nails

REVISIONS			
No.	Date	By	Description
0	12/27/05	RJA	Supersedes FL20037
1	11/14/06	RJA	Revised Anchorage
2	1/9/07	RJA	Revised dpi-drawing numbers

Date: 1/9/07
Scale: NTS
Drawn By: RJA
Checked By: JH

SHEET: WINf

FLORIDA EXTRUDERS
WINDOWS IN FRAME
3 of 7
RELEASE DATE: 09/03/08

COPYRIGHT © 2002 MARONDA HOMES

Maronda Homes
(407) 321-0064 4005 MARONDA WAY SANFORD, FLORIDA

REVISIONS :
2-16-09 Updated to Code.

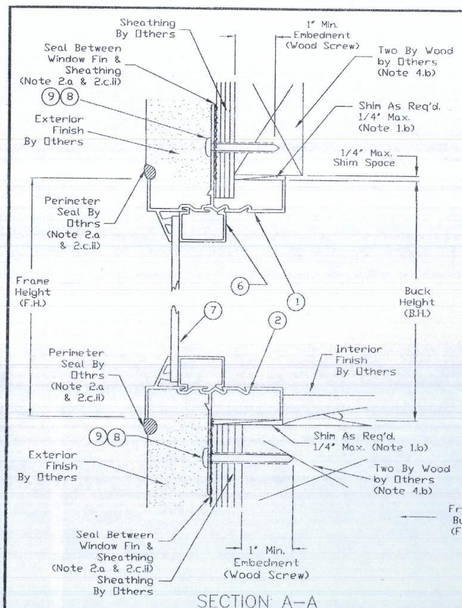

SECTION A–A

GENERAL NOTES

(1 to 15) See General Notes Drawing FLEX20100, Sheet 1 & 2.

(A) Milestone Series 2000 Fixed Aluminum Window is shown. Also applicable to Series 1000 Fixed Aluminum Windows.

(B) Drawing applicable to Non-Impact Resistant glazed windows.

(C) Production Glazing may differ from that tested as allowed by ANSI/AAMA/NWWDA 101/I.S. 2, 101/I.S. 2/NAFS or AAMA/WDMA/CSA 101/I.S. 2/A440 and applicable Building Code. See Note 12 and 13 on Drawing FLEX 20100 for further details.

(D) For Fastener Spacing see Elevation View on Sheet 1 and Notes (L) & (P) on Sheet 2 of this drawing. See Note (H) regarding deviations.

(E) Wood screw and nail withdrawal values used to generate the fastening requirements are based on Spruce-Pine-Fur with a Specific Gravity of 0.50. See Note (H) regarding deviations.

(F) Wood or tapping screw edge distance measured from edge of wood to centerline of wood or tapping screw must meet or exceed 1". Minimum size and embedment per Parts List. See Note (H) regarding deviations.

(G) Nail edge distance measured from edge of wood to centerline of nail must meet or exceed 9/16" or 5 times Shank Diameter, whichever is larger. Minimum size and embedment per Parts List. See Note (H) regarding deviations.

(H) Any deviation less than the minimum requirements stated must be approved by the manufacturer or engineered by "other" Design Professional in accordance with the applicable Building Code and Product Approval.

(I) All field supplied holes in the frame (if required) will be 3/16" in diameter for #8 wood screws or the shank diameter of the nail rounded up to the next standard designation drill bit size.

(J) Wood Screws and Nails SHALL NOT be mixed to fasten the same assembly.

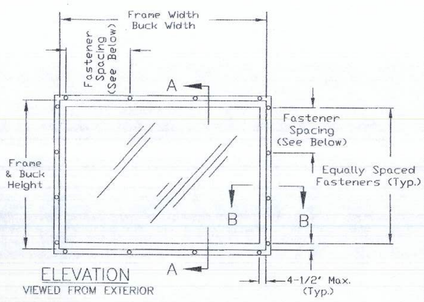

ELEVATION
VIEWED FROM EXTERIOR

Head, Sill & Jamb Anchor Spacing

Wood Screw – TO 70 PSF D.P.: 18" O.C. Max.

Nail
61 PSF TO 70 PSF D.P.: 5-1/2" O.C. Max.
51 PSF TO 60 PSF D.P.: 6-1/2" O.C. Max.
46 PSF TO 50 PSF D.P.: 8" O.C. Max.
41 PSF TO 45 PSF D.P.: 8-1/2" O.C. Max.
36 PSF TO 40 PSF D.P.: 9-1/2" O.C. Max.
TO 35 PSF D.P.: 12" O.C. Max.

DISCLAIMER: The purpose of this installation drawing is to present the manufacturer's recommendations for anchorage (i.e., wood screws, tapping screws, and nails) to achieve the design pressure specified on the fenestration product as required by the 2001 Florida Building Code (FBC), Section 1707.4.4, 2004 FBC-Building, Section 1714.5.4 and the 2004 FBC-Residential, Section R616.6. Recommendations regarding flashing, sealing, sealants or other joint sealant practices does not constitute a warranty either expressed or implied.

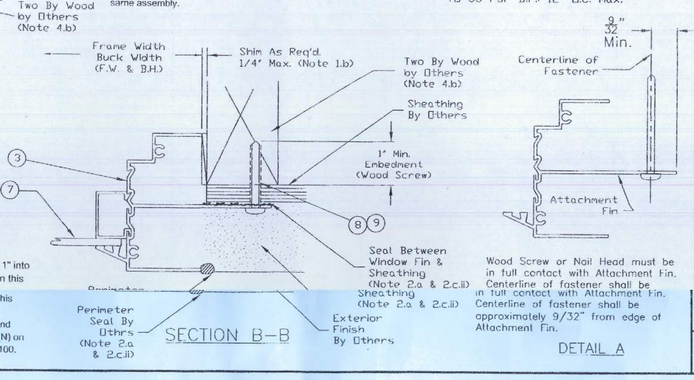

SECTION B–B

Wood Screw or Nail Head must be in full contact with Attachment Fin. Centerline of fastener shall be approximately 9/32" from edge of Attachment Fin.

DETAIL A

PARTS LIST

1 Head - FinFrame
2 Sill - Fin Frame
3 Jamb - Fin Frame
4 Not Used
5 Not Used
6 Glazing Bead
7 Glazing - See Note (B) and (C)
8 #8 Pan Head Wood or Tapping Screw with a minimum embedment of 1" into the structural wood substrate. See Note (K) on Sheet 2 and Detail A on this drawing and Note 4.b & 8 on Drawing FLEX20100.
9 Round Head Deformed Shank Nail with minimum 0.113" diameter (11 GA) and minimum embedment of 1-7/8" into the structural wood substrate. See Note (N) on Sheet 2 and Detail A on this drawing and Notes 4.b & 9 on Drawing FLEX20100.

Robert J. Amoruso, P.E.
FL License No. 49752

ROBERT JAMES AMORUSO LICENSE NO. 49752 STATE OF FLORIDA PROFESSIONAL ENGINEER

Drawing No. FLEX27120
Sheet 1 of 2

Florida Extruders Int'l., Inc.
2540 Jewett Lane • Sanford, FL 32771
407-323-3300 • 407-323-3370 (fax)
www.floridaextruders.com
Florida COA No. 9235

TITLE
Milestone Series 1000 & 2000
Non-Impact Resistant Aluminum Fin
Frame Fixed Window
Installation Drawing for Wood
Substrate with Wood Screws or Nails

REVISIONS

No.	Date	By	Description
0	12/27/06	RJA	Superseded FLEX20080
1	1/12/07	RJA	Revised Notes
2	1/9/07	RJA	Revised Per Reviewer Comments

Date: 1/9/07
Scale: NTS
Drawn By: RJA
Checked By: JH

FASTENER INSTALLATION INSTRUCTIONS - FLEX27120

#8 WOOD SCREWS:

(K) #8 Wood Screw must be of sufficient length to achieve minimum embedment of 1" into the two by wood framing.

(L) Spacing of wood screws shall be:
- 4-1/2" max. from each corner of the head, sill and jambs, and
- evenly spaced between corner fasteners but not exceeding 18" o.c. spacing for the head, sill and jambs as shown in Elevation View on Sheet 1 of this drawing.
- Tolerance is +/- 1". This tolerance is applicable to the evenly spaced distance. 2
- Corner distance measured from frame/buck width or height dimension of frame.

(M) Wood screws shall not be used to fasten assembly into end grain of wood.

NAILS:

(N) Nails shall meet the following requirements:
- 0.113" diameter or greater,
- sufficient length to achieve minimum embedment of 1 7/8" into the two by wood framing (generally, nail 2 3/8" length or greater shall meet this requirement), and
- helical (screw) or annular (ring) shank style only.

(O) Manufacturer's nails meeting these requirements are (but not limited to) the following:
- Paslode deformed shank nail, No. 404917, 404537, 650111 and 650148.
- Duro-Fast deformed shank nail No. 325.

(P) Spacing of nails shall be:
- 4-1/2" max. from each corner of the head, sill and jambs, and
- evenly spaced between corner fasteners and not exceeding o.c. spacing for the head, sill and jambs as shown in Elevation View on Sheet 1 of this drawing.
- Tolerance is +/- 1". This tolerance is applicable to the evenly spaced distance. 2
- Corner distance measured from frame/buck width or height dimension of frame.

(Q) Nails shall not be used to fasten assembly into end grain of wood.

DESIGN PRESSURE RATING & FBC CODE COMPLIANCE

(R) Installations depicted in these instructions acceptable for design pressures to 70 PSF with fastener spacing shown the Elevation View on Sheet 1 of this drawing for the following window sizes:
- to 52 1/8" x 95
- to 63" x 80"
- to 71" x 71"
- to 73" x 73"
- to 83" x 55 1/4"
- to 95" x 49 5/8"
- to 119" x 37 3/8"

Design Pressures (D.P.) are positive and negative. Overall window assembly design pressure may be less than 70 PSF and shall be determined in accordance with Note 13 of FLEX20100.

(S) Production Glazing may differ from that tested as allowed by ANSI/AAMA/NWWDA 101/I.S. 2, 101/I.S. 2/NAFS or AAMA/WDMA/CSA 101/I.S. 2/A440 and applicable Building Code. See Note 12 and 13 on Drawing FLEX 20100 for further details.

(T) Structural two by wood buck and/or framing at the head, sill and jambs to be securely fastened to transfer the load to the wood structural substrate per the FBC and the engineer of record's details as applicable.

(U) See FLEX20100, Notes 10 to 15 for additional FBC Code Compliance.

Florida Extruders Int'l., Inc.
2540 Jewett Lane • Sanford, FL 32771
407-323-3300 • 407-323-3370 (fax)
www.floridaextruders.com
Florida COA No. 9235

TITLE
Milestone Series 1000 & 2000
Non-Impact Resistant Aluminum Fin
Frame Fixed Window
Installation Drawing for Wood
Substrate with Wood Screws or Nails

REVISIONS

No.	Date	By	Description
0	12/27/06	RJA	Superseded FLEX20080
1	1/12/07	RJA	Revised Notes
2	1/9/07	RJA	Revised Per Reviewer Comments

Date: 1/9/07
Scale: NTS
Drawn By: RJA
Checked By: JH

Drawing No. FLEX27120
Sheet 2 of 2

Florida Product Approval # FL9242

FIXID

SHEET: WINf

FLORIDA EXTRUDERS
WINDOWS IN FRAME
4 of 7
RELEASE DATE: 09/03/08

COPYRIGHT © 2002 MARONDA HOMES

Maronda Homes
(407) 321-0064 4005 MARONDA WAY SANFORD, FLORIDA

REVISIONS :
3-11-08 Revised
2-16-09 Updated to Code.

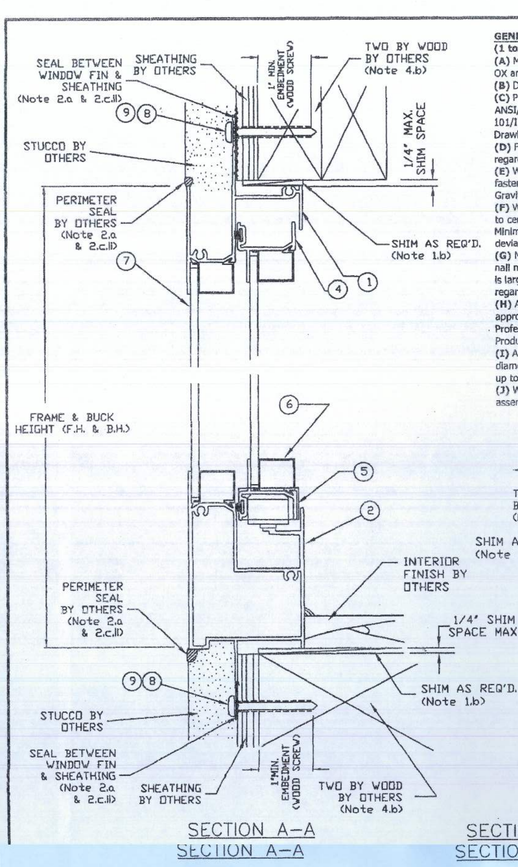

SECTION A–A

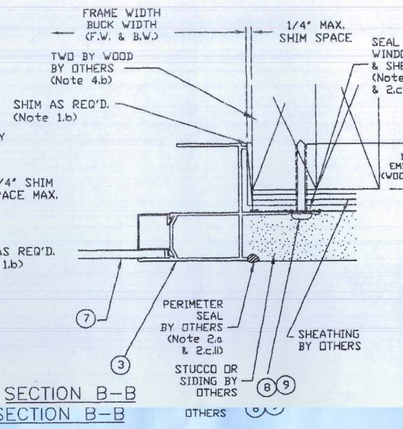

SECTION B–B

GENERAL NOTES

(1 to 15) See General Notes Drawing FLEX20100, Sheet 1 & 2.
(A) Milestone Series 1000 Horizontal Sliding Aluminum Window in XO, OX and XOX configurations are shown.
(B) Drawing applicable to Non-Impact Resistant glazed windows.
(C) Production Glazing may differ from that tested as allowed by ANSI/AAMA/NWWDA 101/I.S. 2, 101/I.S. 2/NAFS or AAMA/WDMA/CSA 101/I.S. 2/A440 and applicable Building Code. See Note 12 and 13 on Drawing FLEX 20100 for further details.
(D) For Fastener Locations see Sheet 2 of this drawing. See Note (H) regarding deviations.
(E) Wood screw and nail withdrawal values used to generate the fastening requirements are based on Spruce-Pine-Fur with a Specific Gravity of 0.50. See Note (H) regarding deviations.
(F) Wood or tapping screw edge distance measured from edge of wood to centerline of wood or tapping screw must meet or exceed 1". Minimum size and embedment per Parts List. See Note (H) regarding deviations.
(G) Nail edge distance measured from edge of wood to centerline of nail must meet or exceed 9/16" or 5 times Shank Diameter, whichever is larger. Minimum size and embedment per Parts List. See Note (H) regarding deviations.
(H) Any deviation less than the minimum requirements stated must be approved by the manufacturer or engineered by "other" Design Professional in accordance with the applicable Building Code and Product Approval.
(I) All field supplied holes in the frame (if required) will be 3/16" in diameter for #8 wood screws or the shank diameter of the nail rounded up to the next standard designation drill bit size.
(J) Wood Screws and Nails SHALL NOT be mixed to fasten the same assembly.

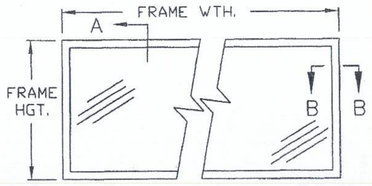

ELEVATION – VIEWED FROM EXTERIOR

DISCLAIMER: The purpose of this installation drawing is to present the manufacturer's recommendations for anchorage [i.e., wood screws, tapping screws and nails as applicable] to achieve the design pressure specified on the fenestration product as required by the 2001 Florida Building Code (FBC), Section 1707.4.4, 2004 FBC-Building, Section 1714.5.4 and the 2004 FBC-Residential, Section R616.6. Recommendations regarding flashing, sealing, sealants or other joint sealant practices does not constitute a warranty either expressed or implied.

PARTS LIST

1 Head - Fin Frame
2 Sill - Fin Frame
3 Jamb - Fin Frame
4 Head - Sash
5 Sill - Sash
6 Glazing Bead
7 Glazing - See Note (B) and (C)
8 #8 Pan Head Wood or Tapping Screw with a minimum embedment of 1" into the structural wood substrate. See Note (K to N) and Detail A on this drawing and Note 4.b & 8 on Drawing FLEX20100.
9 Round Head Deformed Shank Nail with minimum 0.113" diameter (11GA) and minimum embedment of 1-7/8" into the structural wood substrate. See Note (O to R) and Detail A on this drawing and Notes 4.b & 9 on Drawing FLEX20100.

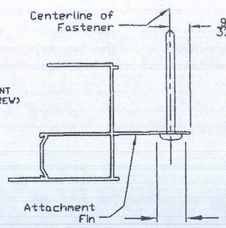

DETAIL A

Wood Screw or Nail Head must be in full contact with Attachment Fin. Centerline of fastener shall be approximately 9/32" from edge of Attachment Fin.

Florida Extruders Int'l., Inc.
2540 Jewett Lane - Sanford, FL 32771
407-323-3300 - 407-322-3507 (fax)
www.floridaextruders.com
Florida COA No. 9235

TITLE
Milestone Series 1000
Non-Impact Rated Aluminum Fin Frame Horizontal Sliding Window Installation Drawing for Wood Substrate with Wood Screws or Nails

REVISIONS			
No.	Date	By	Description
0	12/27/05	RJA	Supersedes FLEX0028
1	11/14/06	RJA	Supersedes FLEX0029
2	1/04/07	RJA	Revised Anchorage Connection Detail and Fastener Spacing

Date: 1/04/07
Scale: NTS
Drawn By: RJA
Checked By: JH

Robert J. Amoruso, P.E.
FL License No. 49752
ROBERT JAMES AMORUSO LICENSE NO. 49752 STATE OF FLORIDA PROFESSIONAL ENGINEER 1/4/07

Drawing No. FLEX25120
Sheet 1 of 2

Sheet 1 of 2

No. 8 Wood and Tapping Screw Fastener Location Tables 2

Series 1000 Horizontal Slider XO/OX and XOX - Modular

JAMBS	Buck Height	No. Fasteners in each Jamb	Eb	Et	L1	L2
	23	2	6	6	n/a	n/a
	35	2	6	6	n/a	n/a
	47	3	6	6	23 1/2	n/a
	53	4	6	6	19 3/4	13 1/2
	59	4	6	6	21 3/4	15 1/2
	71	4	6	6	25 3/4	19 1/2

Series 1000 Horizontal Slider XO/OX - Modular

HEAD & SILL	Buck Width	No. Fasteners in Head & Sill	Fastener Location Es	Eh	L3
	23	4	4 1/8	4 1/8	8 1/4
	35	4	4 1/8	4 1/8	14 1/4
	47	4	4 1/8	4 1/8	20 1/4
	53	4	4 1/8	4 1/8	23 1/4
	59	4	4 1/8	4 1/8	26 1/4
	65	4	4 1/8	4 1/8	29 1/4
	71	4	4 1/8	4 1/8	32 1/4

Series 1000 Horizontal Slider XOX - Modular

HEAD & SILL	Buck Width	No. Fasteners in Head & Sill	Fastener Location Es	Eh	L4
	71	6	4 1/8	4 1/8	14 1/4
	83	6	4 1/8	4 1/8	14 1/4
	95	6	4 1/8	4 1/8	20 1/4
	107	6	4 1/8	4 1/8	26 1/4
	119	6	4 1/8	4 1/8	26 1/4

FASTENER INSTALLATION INSTRUCTIONS - FLEX25120

#8 WOOD SCREWS:
(K) See fastener location table and Elevation Views on this sheet for location of #8 Wood Screws.
(L) #8 Wood Screw must be of sufficient length to achieve minimum embedment of 1" into the two by wood framing.
(M) See Detail "A" on sheet 1 for approximate location of the wood screw in the attachment fin.
(N) Wood screws shall not be used to fasten assembly into end grain of wood.
NAILS:
(O) Nails shall meet the following requirements:
- 0.113" diameter or greater,
- sufficient length to achieve minimum embedment of 1 7/8" into the two by wood framing (generally, nail 2 3/8" length or greater shall meet this requirement), and
- Paslode deformed shank nail, No. 404947, 404537, 650111 and 650148.
- Duro-Fast deformed shank nail No. 325.

(Q) Location of nails shall be (+/- 1" tolerance on spacing, edge distance is a maximum); 2
- 4" maximum from each corner of the head, sill and jambs or XO/OX & XOX configurations, and
- for the XO/OX Configuration, 7" O.C. Max. for Jamb, Head and Sill for 46 PSF to 60 PSF DP, or
- for the XO/OX Configuration, 9" O.C. Max. for Jamb, Head and Sill for 36 PSF to 45 PSF DP, or
- for the XO/OX Configuration, 12" O.C. Max. for Jamb, Head and Sill to 35 PSF DP, or
- for the XOX Configuration, 7" O.C. Max. for Jamb & 5" O.C. max. for Head and Sill for 46 PSF to 60 PSF DP, or
- for the XOX Configuration, 9" O.C. Max. for Jamb & 7" O.C. max. for Head and Sill for 36 PSF to 45 PSF DP, or
- for the XOX Configuration, 12" O.C. Max. for Jamb & 9" O.C. max. for Head and Sill to 35 PSF DP, and
- See Detail "A" on sheet 1 for approximate location of the nail in the attachment fin.

(R) Nails shall not be used to fasten assembly into end grain of wood.

DESIGN PRESSURE RATING & FBC CODE COMPLIANCE

(S) If exact window size is not listed in fastener location table, use fastener locations listed for next larger size.
(T) Installations depicted in these instructions acceptable for design pressures to 60 PSF for the window sizes shown in the table. Design Pressures (D.P.) are positive and negative. Overall window assembly design pressure may be less than 60 PSF and shall be determined in accordance with Note 13 of FLEX20100. Nailing schedule in Note (Q) for design pressures to 35 PSF, 45 PSF and 60 PSF.
(U) Production Glazing may differ from that tested as allowed by ANSI/AAMA/NWWDA 101/I.S. 2, 101/I.S. 2/NAFS or AAMA/WDMA/CSA 101/I.S. 2/A440 and applicable Building Code. See Note 12 and 13 on Drawing FLEX 20100 for further details.
(V) Structural two by wood buck and/or framing at the head, sill and jambs to be securely fastened to transfer the load to the wood structural substrate per the FBC and the engineer of record's details as applicable.
(W) See FLEX20100, Notes 10 to 15 for additional FBC Code Compliance. 2

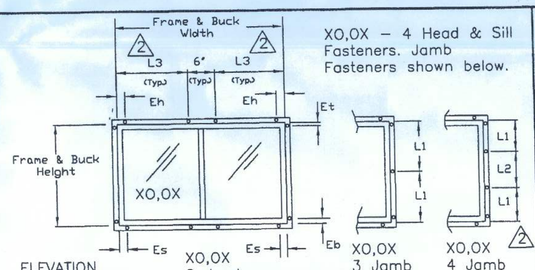

XO,OX – 4 Head & Sill Fasteners. Jamb Fasteners shown below.

ELEVATION VIEW, XO/OX — XO,OX 2 Jamb Fasteners — XO,OX 3 Jamb Fasteners — XO,OX 4 Jamb Fasteners

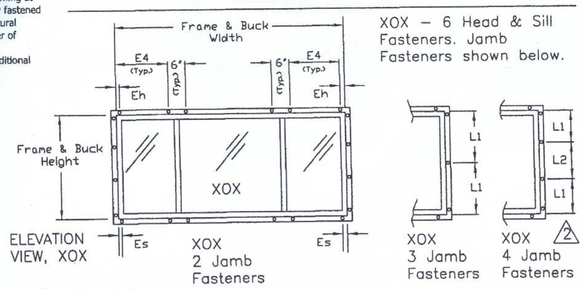

XOX – 6 Head & Sill Fasteners. Jamb Fasteners shown below.

ELEVATION VIEW, XOX — XOX 2 Jamb Fasteners — XOX 3 Jamb Fasteners — XOX 4 Jamb Fasteners

Fastener Location Table Notes:

1) All dimensions shown taken from the buck width or height of the window frame.
2) Based on size (buck width and height) and configuration (XO/OX or XOX) of the window to install the No. 8 wood or tapping screws determine the locations of the No. 8 Wood or ... 2
+ / – 1" for spacing. Edge distance is a maximum.
4) This table is NOT applicable to the nailing option. See Notes O, P, Q, and R for nail installation locations and spacing.

Florida Extruders Int'l., Inc.
2540 Jewett Lane - Sanford, FL 32771
407-323-3300 - 407-322-3507 (fax)
www.floridaextruders.com
Florida COA No. 9235

TITLE
Milestone Series 1000
Non-Impact Rated Aluminum Fin Frame Horizontal Sliding Window Installation Drawing for Wood Substrate with Wood Screws or Nails

REVISIONS			
No.	Date	By	Description
0	12/27/05	RJA	Supersedes FLEX0028
1	11/14/06	RJA	Supersedes FLEX0029
2	1/04/07	RJA	Revised Anchorage Connection Detail and Fastener Spacing

Date: 1/04/07
Scale: NTS
Drawn By: RJA
Checked By: JH

Drawing No. FLEX25120
Sheet 2 of 2

Florida Product Approval # FL9236

HORIZOTAL

WINf

SHEET:

FLORIDA EXTRUDERS
WINDOWS IN FRAME
5 of 7
RELEASE DATE: 09/03/08

COPYRIGHT © 2002 MARONDA HOMES

Maronda Homes
(407) 321-0064 4005 MARONDA WAY SANFORD, FLORIDA

REVISIONS :
2-16-09 Updated to Code.

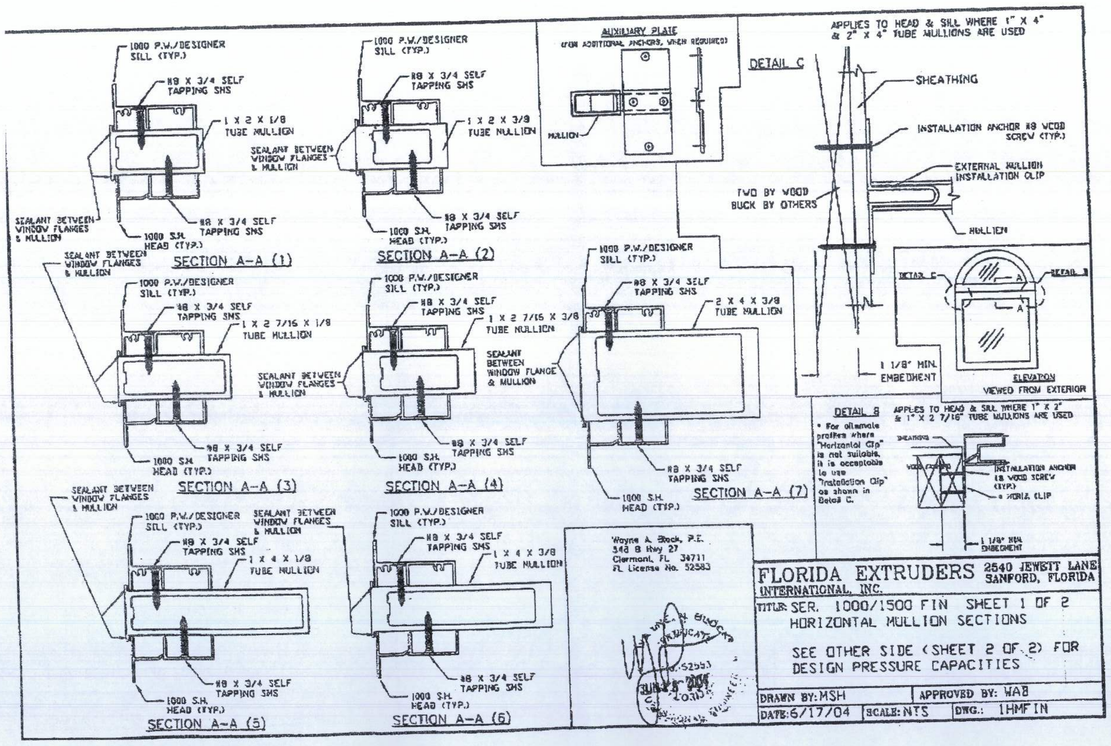

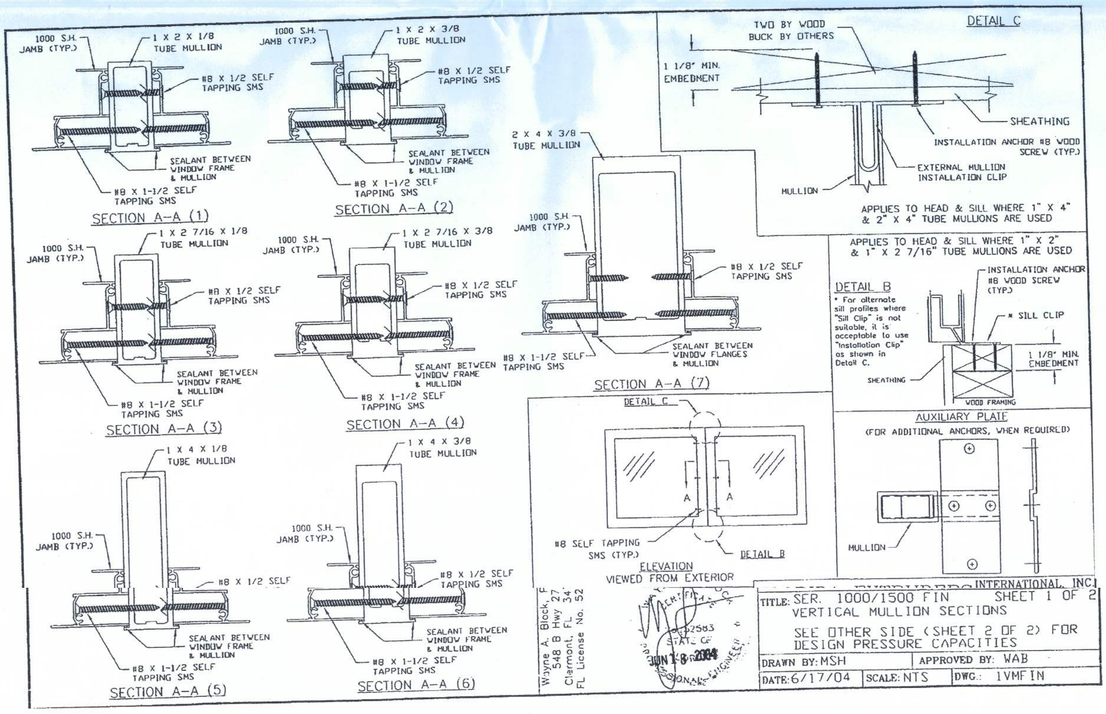

Florida Product Approval # FL3136-R3

MULLONS

SHEET: WINf

FLORIDA EXTRUDERS

WINDOWS IN FRAME

6 of 7

RELEASE DATE: 09/03/08

COPYRIGHT © 2002 MARONDA HOMES

Maronda Homes

(407) 321-0064 4005 MARONDA WAY SANFORD, FLORIDA

REVISIONS :

2-16-09 Updated to Code.

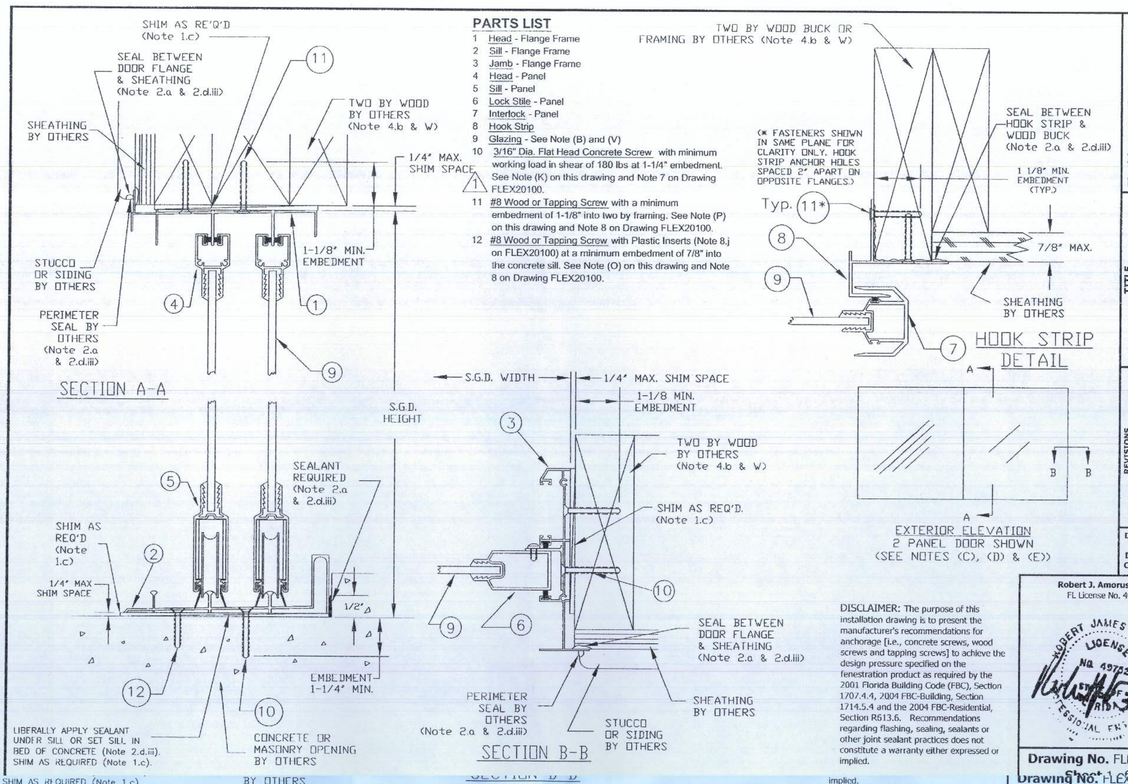

PARTS LIST

1 Head - Flange Frame
2 Sill - Flange Frame
3 Jamb - Flange Frame
4 Head - Panel
5 Sill - Panel
6 Lock Stile - Panel
7 Interlock - Panel
8 Hook Strip
9 Glazing - See Note (B) and (V)
10 3/16" Dia. Flat Head Concrete Screw with minimum working load in shear of 180 lbs at 1-1/4" embedment. See Note (K) on this drawing and Note 7 on Drawing FLEX20100.
11 #8 Wood or Tapping Screw with a minimum embedment of 1-1/8" into two by framing. See Note (P) on this drawing and Note 8 on Drawing FLEX20100.
12 #8 Wood or Tapping Screw with Plastic Inserts (Note 8.j on FLEX20100) at a minimum embedment of 7/8" into the concrete sill. See Note (O) on this drawing and Note 8 on Drawing FLEX20100.

DISCLAIMER: The purpose of this installation drawing is to present the manufacturer's recommendations for anchorage [i.e., concrete screws, wood screws and tapping screws] to achieve the design pressure specified on the fenestration product as required by the 2001 Florida Building Code (FBC), Section 1707.4.4, 2004 FBC-Building, Section 1714.5.4 and the 2004 FBC-Residential, Section R613.6. Recommendations regarding flashing, sealing, sealants or other joint sealant practices does not constitute a warranty either expressed or implied.

Florida Extruders Int'l., Inc.
2540 Jewett Lane - Sanford, FL 32771
407-323-3300 - 407-323-3507 (fax)
www.floridaextruders.com
Florida COA No. 9235

TITLE: Milestone Series 1000 & 2000 Non-Impact Resistant Aluminum Flange Frame Sliding Glass Door Installation Drawing for Concrete Sill w/Concrete Screws & Wood Substrate w/#8 Wood Screws

REVISIONS			
No.	Date	By	Description
0	12/27/06	RJA	Supersedes FLEX0027
1	3/02/07	RJA	Revised for new testing

Date: 3/02/07
Scale: NTS
Drawn By: RJA
Checked By: JH

Robert J. Amoruso, P.E.
FL License No. 49752

Drawing No. FLEX24111
Sheet 1 of 2

Fastener Installation Chart

Size Code	Configuration	Size: Width	Size: Height	Required Quantities of Fasteners: Jamb (No. 8 WS)	Head (No. 8 WS)	Sill (3/16" CS)	Hook Strip (No. 8 WS)
4068	XX, OX, XO	48	80	8	6	3 (D6)	8
5068	XX, OX, XO	60	80	8	6	3 (D6)	8
6068	XX, OX, XO	72	80	8	8	4 (D8)	8
8068	XX, OX, XO	96	80	8	10	5 (D10)	8
10068	XX, OX, XO	120	80	8	12	7 (D1)	8
5080	XX, OX, XO	60	96	10	6	3 (D6)	10
6080	XX, OX, XO	72	96	10	8	4 (D8)	10
8080	XX, OX, XO	96	96	10	10	5 (D10)	10
10080	XX, OX, XO	120	96	10	12	8 (D12)	10
50100	XX, OX, XO	60	120	12	6	3 (D6)	12
60100	XX, OX, XO	72	120	12	8	4 (D8)	12
80100	XX, OX, XO	96	120	12	10	5 (D10)	12
6068	OXO	109 1/8	80	8	10	6 (D1)	8
12068	OXO	145 1/8	80	8	14	9 (D2)	8
15068	OXO	181 1/8	80	8	16	12 (D4)	8
6080	OXO	109 1/8	96	10	10	7 (D2)	10
12080	OXO	145 1/8	96	10	14	10 (D3)	10
15080	OXO	181 1/8	96	10	16	14 (D6)	10
60100	OXO	109 1/8	120	12	10	7 (D2)	12
120100	OXO	145 1/8	120	12	14	11 (D4)	12
9068	XXX	136 5/8	80	8	10	6 (D1)	8
12068	XXX	142 5/8	80	8	14	9 (D2)	8
15068	XXX	178 5/8	80	8	16	12 (D4)	8
9080	XXX	136 5/8	96	10	10	6 (D1)	10
12080	XXX	142 5/8	96	10	14	10 (D3)	10
15080	XXX	178 5/8	96	10	16	14 (D6)	10
90100	XXX	136 5/8	120	12	10	7 (D2)	12
12100	XXX	142 5/8	120	12	14	11 (D4)	12
10068	OXXO	119 5/8	80	8	12	7 (D1)	8
12068	OXXO	143 5/8	80	8	14	9 (D2)	8
16068	OXXO	191 5/8	80	8	18	13 (D4)	8
10080	OXXO	119 5/8	96	10	12	8 (D2)	10
12080	OXXO	143 5/8	96	10	14	10 (D3)	10
16080	OXXO	191 5/8	96	10	18	15 (D6)	10
100100	OXXO	119 5/8	120	12	12	8 (D2)	12
120100	OXXO	143 5/8	120	12	14	11 (D4)	12
160100	OXXO	191 5/8	120	12	18	17 (D8)	12
10068	XXXX	117 1/4	80	8	12	7 (D1)	8
12068	XXXX	141 1/4	80	8	14	9 (D2)	8
16068	XXXX	189 1/4	80	8	18	13 (D4)	8
10080	XXXX	117 1/4	96	10	12	8 (D2)	10
12080	XXXX	141 1/4	96	10	14	10 (D3)	10
16080	XXXX	189 1/4	96	10	18	15 (D6)	10
100100	XXXX	117 1/4	120	12	12	8 (D2)	12
120100	XXXX	141 1/4	120	12	14	11 (D4)	12
160100	XXXX	189 1/4	120	12	18	17 (D8)	12

Fastener Installation Chart Notes:

1) In some cases concrete screws are only required in one of the factory applied installation hole sets (i.e., a hole set being the two holes lying in a plane perpendicular to the width of the door frame). In those cases designated as "D0" in the installation chart, one of the holes will receive a Concrete Screw and the remaining holes will be filled in accordance with Notes O and P.
2) In some cases concrete screws are required in both factory applied installation hole sets. "D1" through "D8" designates in which size & configurations two concrete screws are required. The remaining holes will be filled in accordance with Notes O and P.
a) "D1" means, install two concrete screws in one set of installation holes.
d) "D4" means, install two concrete screws in four sets of installation holes.
e) "D5" means, install two concrete screws in five sets of installation holes.
f) "D6" means, install two concrete screws in six sets of installation holes.
g) "D7" means, install two concrete screws in seven sets of installation holes.
h) "D8" means, install two concrete screws in eight sets of installation holes.
3) Location of additional concrete screws in head & sill should be prioritized as follows:
a) First adjacent to interlock or butt stiles in head & sill.
b) Secondly, at each end of head & sill near jamb corner, if needed.
c) Locations in head & sill other than as listed in a & b.
4) Location of additional concrete screws in jambs should be prioritized as follows:
a) First adjacent to locks in jambs.
b) Secondly, at each end of jambs near head & sill corners
c) Locations in jambs other than as listed in a & b.
5) CS = concrete screw and WS = wood screw

GENERAL NOTES

(1 to 15) See General Notes Drawing FLEX20100, Sheet 1 & 2.
(A) Milestone Series 1000 Sliding Glass Door is shown. Also applicable to Milestone Series 2000 Sliding Glass Door.
(B) Drawing applicable to Non-Impact Resistant Sliding Glass Doors glazed with 3/16" fully tempered glass. See Note (V).
(C) Where "X" represents moving panel and "O" represents fixed panel, approved configurations are as listed on the fastener installation chart on Sheet 2.
(D) Not all configurations listed on the fastener chart are shown on this drawing, however installation sections "A-A", "B-B" & Hook Strip Detail apply to installation of all approved configurations.
(E) For pocket door configurations, use closest by-pass door size and configuration in the chart to the finished opening of the pocket door.
(F) Concrete screw edge distance measured from edge of concrete/masonry/block to centerline of concrete screw must meet or exceed 2 1/4". Minimum size and embedment per Parts List. See Note (J) regarding deviations.
(G) Wood or tapping screw edge distance measured from edge of wood receiving the point to centerline of wood or tapping screw must meet or exceed 1". Minimum size and embedment per Parts List. See Note (J) regarding deviations.
(H) All field supplied holes in the frame (if required) will be 3/16" in diameter.
(I) Wood screw withdrawal values used to generate the fastening requirements are based on Spruce-Pine-Fur with a Specific Gravity of 0.50. See Note (J) regarding deviations.
(J) Any deviation less than the minimum requirements stated must be approved by the manufacturer or engineered by "other" Design Professional in accordance with the applicable Building Code and Product Approval.

FASTENER INSTALLATION INSTRUCTIONS - FLEX24111

3/16" DIA. CONCRETE SCREW WITH SILL:

(K) Where door is installed in an opening with a masonry or concrete sill, use a 3/16" diameter concrete screw of sufficient length to achieve minimum embedment of 1-1/4" into masonry or concrete. See "Parts List" on Sheet 1 of this drawing for concrete screw size, embedment and load requirements. See FLEX20100, Note 7 for additional concrete screw requirements.
(L) See fastener installation chart this sheet for concrete screw quantities and additional installation requirements.
(M) Install one concrete screw in each pair of factory applied installation holes unless noted otherwize on the fastener installation chart. It is acceptable to install a 3/16" diameter concrete screw with a 1-1/4" embedment in all holes in the sill which will exceed the minimum requirements of the Fastener Installation Chart.
(N) Alternate concrete screw installation fasteners front to back in the sill frame member when both sets of holes are not used.
(O) All remaining factory applied installation fastener holes in the sill not used for concrete screw installation shall be anchored with plastic anchors (see FLEX20100, Note 8.j for details) and #8 wood screws of sufficient length to provide min. 7/8" in. embedment into the concrete or masonry. See "Parts List" on Sheet 1 of this drawing for wood screw size and embedment requirements. See FLEX20100, Note 8 for additional wood screw requirements.

#8 WOOD SCREW WITH STRUCTURAL TWO BY WOOD BUCK FOR HEAD, JAMBS AND POCKET DOOR HOOK STRIP:

(P) Where the head, jambs and pocket door hook strip is installed in a wood opening with a structural two by wood buck and/or framing, use #8 wood screws of sufficient length to achieve 1-1/8" minimum embedment into the two by wood buck and/or framing receiving the point at all factory applied installation holes. See "Parts List" on Sheet 1 of this drawing for wood screw size and embedment requirements. See FLEX20100, Note 8 for additional wood screw requirements.
(Q) See fastener installation chart this sheet for #8 wood screw requirements in jamb(s), head and hook strip.
(R) Not used.
(S) Wood screws shall not be used to fasten assembly into end grain of wood.

(T) If exact door size is not listed in fastener installation chart, use fastener quantity listed for next larger size, for the appropriate design pressure required.
(U) Installations depicted in these instructions acceptable for design pressures to 55 PSF for the window sizes shown in the chart. Design Pressures (D.P.) are positive and negative. Overall window assembly design pressure may be less than that shown in the fastener quantity table and shall be determined in accordance with Note 13 of FLEX20100.
(V) Production Glazing may differ from that tested as allowed by ANSI/AAMA/NWWDA 101/I.S. 2, 101/I.S. 2/NAFS or AAMA/WDMA/CSA 101/I.S. 2/A440 and applicable Building Code. See Note 12 and 13 on Drawing FLEX 20100 for further details.
(W) Two by wood and/or framing to be securely fastened to transfer the load to the masonry, concrete or other structural substrate per the FBC and the engineer of record's details as applicable.
(X) See FLEX20100, Notes 10 to 15 for additional FBC Code Compliance.

Florida Extruders Int'l., Inc.
2540 Jewett Lane - Sanford, FL 32771
407-323-3300 - 407-323-3507 (fax)
www.floridaextruders.com
Florida COA No. 9235

TITLE: Milestone Series 1000 & 2000 Non-Impact Resistant Aluminum Flange Frame Sliding Glass Door Installation Drawing for Concrete Sill w/Concrete Screws & Wood Substrate w/#8 Wood Screws

REVISIONS			
No.	Date	By	Description
0	12/27/06	RJA	Supersedes FLEX0027
1	3/02/07	RJA	Revised for new testing

Date: 3/02/07
Scale: NTS
Drawn By: RJA
Checked By: JH

Drawing No. FLEX24111
Sheet 2 of 2

Florida Product Approval # FL8409

SLIDING GLASS DOORS

SHEET: WINf

FLORIDA EXTRUDERS
WINDOWS IN FRAME
7 of 7
RELEASE DATE: 09/03/08

COPYRIGHT © 2002 MARONDA HOMES

Maronda Homes
(407) 321-0064 4005 MARONDA WAY SANFORD, FLORIDA

REVISIONS :
2-16-09 Updated to Code.