ITW Building Components Group, Inc.

1950 Marley Drive Haines City, FL 33844
Florida Engineering Certificate of Authorization Number: 0 278
Florida Certificate of Product Approval # FL1999
Page 1 of 1 Document ID:1UT39114Z0322132240

WILLIAM H. KRICK
LICENSE
No. 70861
STATE OF FLORIDA
PROFESSIONAL ENGINEER
01/22/2013

Truss Fabricator:	**Anderson Truss Company**
Job Identification:	**120912F--Anderson Truss Co. Patel Residence -- Lot 1 Hills Of Lindsey**
Truss Count:	**84**
Model Code:	**Florida Building Code 2010**
Truss Criteria:	**FBC2010Res/TPI-2007(STD)**
Engineering Software:	**Alpine Software,Version 10.03.**
Structural Engineer of Record:	**The identity of the structural EOR did not exist as of**
Address:	**the seal date per section 61G15-31.003(5a) of the FAC**
Minimum Design Loads:	**Roof - N/A**
	Floor - 55.0 PSF @ 1.00 Duration
	Wind - No Wind

Notes:

1. **Determination as to the suitability of these truss components for the structure is the responsibility of the building designer/engineer of record, as defined in ANSI/TPI 1**
2. **The drawing date shown on this index sheet must match the date shown on the individual truss component drawing.**
3. **As shown on attached drawings; the drawing number is preceded by: HCUSR9114**

William H. Krick
-Truss Design Engineer-

1950 Marley Drive
Haines City, FL 33844

Details: STRBRIBR-CNSY42PL-

#	Ref Description	Drawing#	Date
1	81482--F1	13022168	01/22/13
2	81483--F2	13022169	01/22/13
3	81484--F3	13022170	01/22/13
4	81485--F4	13022171	01/22/13
5	81486--F5	13022172	01/22/13
6	81487--F6	13022173	01/22/13
7	81488--F7	13022174	01/22/13
8	81489--F8	13022175	01/22/13
9	81490--F9	13021261	01/21/13
10	81491--F10 2-PLY	13021259	01/21/13
11	81492--F11	13021260	01/21/13
12	81493--F12	13022176	01/22/13
13	81494--F13	13022177	01/22/13
14	81495--F14	13022178	01/22/13
15	81496--F15	13022179	01/22/13
16	81497--F16	13022180	01/22/13
17	81498--F17	13022181	01/22/13
18	81499--F18	13022182	01/22/13
19	81500--F19	13022183	01/22/13
20	81501--F20	13022184	01/22/13
21	81502--F20A	13022185	01/22/13
22	81503--F21	13021236	01/21/13
23	81504--F22	13022186	01/22/13
24	81505--F23	13022187	01/22/13
25	81506--F26	13022188	01/22/13
26	81507--F27	13021238	01/21/13
27	81508--F28	13022189	01/22/13
28	81509--F29	13021237	01/21/13
29	81510--F30	13022190	01/22/13
30	81511--F31	13022191	01/22/13
31	81512--F32	13022192	01/22/13
32	81513--F33	13022193	01/22/13
33	81514--F34	13022194	01/22/13
34	81515--F35	13022195	01/22/13
35	81516--F36	13022196	01/22/13
36	81517--F37	13022197	01/22/13
37	81518--F38	13022198	01/22/13
38	81519--F39	13022199	01/22/13

#	Ref Description	Drawing#	Date
39	81520--F40	13022200	01/22/13
40	81521--F41	13022201	01/22/13
41	81522--F42	13022202	01/22/13
42	81523--F43	13022203	01/22/13
43	81524--F44	13022204	01/22/13
44	81525--F45	13021239	01/21/13
45	81526--F46	13021246	01/21/13
46	81527--F47	13021244	01/21/13
47	81528--F48	13021241	01/21/13
48	81529--F49	13021243	01/21/13
49	81530--F50	13021240	01/21/13
50	81531--F51	13021242	01/21/13
51	81532--F52	13021247	01/21/13
52	81533--F53	13021258	01/21/13
53	81534--F54	13021248	01/21/13
54	81535--F55	13021245	01/21/13
55	81536--F56	13021226	01/21/13
56	81537--F57	13022205	01/22/13
57	81538--F58	13022206	01/22/13
58	81539--F59	13022207	01/22/13
59	81540--F60	13022208	01/22/13
60	81541--F61	13022209	01/22/13
61	81542--F62	13021249	01/21/13
62	81543--F63	13021250	01/21/13
63	81544--F64	13021251	01/21/13
64	81545--F65	13021252	01/21/13
65	81546--F66	13021253	01/21/13
66	81547--F67	13021254	01/21/13
67	81548--F68	13021255	01/21/13
68	81549--F69	13021256	01/21/13
69	81550--F70	13021257	01/21/13
70	81551--F71	13021224	01/21/13
71	81552--F72	13022210	01/22/13
72	81553--F73	13021221	01/21/13
73	81554--F89	13021225	01/21/13
74	81555--F90	13021223	01/21/13
75	81556--F91	13021222	01/21/13
76	81557--F92	13021227	01/21/13

#	Ref Description	Drawing#	Date
77	81558--F93	13021228	01/21/13
78	81559--F94	13021229	01/21/13
79	81560--F95	13021230	01/21/13
80	81561--F96	13021231	01/21/13
81	81562--F97	13021232	01/21/13
82	81563--F98	13021233	01/21/13
83	81564--F99	13021234	01/21/13
84	81565--F100	13021235	01/21/13

COLUMBIA COUNTY BUILDING DEPARTMENT
Received for
FILE COPY
Code Compliance
PLANS EXAMINER

(120912F--Anderson Truss Co. Patel Residence -- Lot 1 Hills Of Windsor , ** - F1)

Top chord 4x2 SP_#1_12A
Bot chord 4x2 SP_#1_12A
Webs 4x2 SP_#3__12A

Lumber grades designated with "12A" use design values approved 1/5/2012 by ALSC.

Deflection meets L/360 live and L/240 total load. Creep increase factor for dead load is 1.50.

Truss must be installed as shown with top chord up.

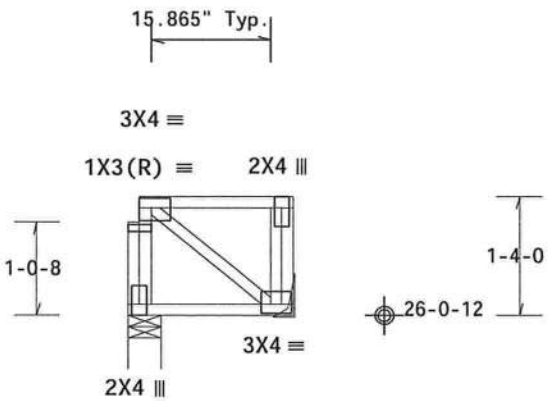

1-9-14 Over 2 Supports

R=86 W=4.325"
R=102
H=H1

Design Crit: FBC2010Res/TPI-2007(STD)
FT/RT=12%(0%)/10(0)

PLT TYP. Wave

10.03.11.0209.19 QTY 1

FL/-/5/-/-/R/-

Scale =.5"/Ft.

WILLIAM H. KRICK
LICENSE
No. 70861
STATE OF FLORIDA
PROFESSIONAL ENGINEER
01/22/2013

ALPINE
ITW Building Components Group Inc.
Haines City, FL 33844
FL COA #0 278

WARNING READ AND FOLLOW ALL NOTES ON THIS SHEET!
IMPORTANT FURNISH THIS DESIGN TO ALL CONTRACTORS INCLUDING INSTALLERS.

Trusses require extreme care in fabricating, handling, shipping, installing and bracing. Refer to and follow the latest edition of BCSI (Building Component Safety Information, by TPI and WTCA) for recommended practices prior to performing these functions. Installers shall provide temporary bracing per BCSI. Unless noted otherwise, top chord shall have properly attached structural sheathing and bottom chord shall have a properly attached rigid ceiling. Locations shown for permanent lateral restraint of webs shall have bracing installed per BCSI sections B3, B7 or B10, as applicable.

ITW Building Components Group Inc. (ITWBCG) shall not be responsible for any deviation from this design, any failure to build the truss in conformance with ANSI/TPI 1, or for handling, shipping, installation & bracing of trusses. Apply plates to each face of truss and position as shown above and on the Joint Details, unless noted otherwise. Refer to drawings 160A-Z for standard plate positions. A seal on this drawing or cover page listing this drawing, indicates acceptance of professional engineering responsibility solely for the design shown. The suitability and use of this design for any structure is the responsibility of the Building Designer per ANSI/TPI 1 Sec.2. For more information see: This job's general notes page; ITW-BCG: www.itwbcg.com; TPI: www.tpinst.org; WTCA: www.sbcindustry.com; ICC: www.iccsafe.org

TC LL	40.0 PSF	REF	R9114- 81482
TC DL	10.0 PSF	DATE	01/22/13
BC DL	5.0 PSF	DRW	HCUSR9114 13022168
BC LL	0.0 PSF	HC-ENG	WHK/WHK
TOT.LD.	55.0 PSF	SEQN-	97174
DUR.FAC.	1.00	FROM	SDY
SPACING	24.0"	JREF-	1UT39114Z03

(120912F--Anderson Truss Co. Patel Residence -- Lot 1 Hills Of Windsor , ** - F2)

Top chord 4x2 SP_#1_12A
Bot chord 4x2 SP_#1_12A
Webs 4x2 SP_#3__12A

Lumber grades designated with "12A" use design values approved 1/5/2012 by ALSC.

Deflection meets L/360 live and L/240 total load. Creep increase factor for dead load is 1.50.

Truss must be installed as shown with top chord up.

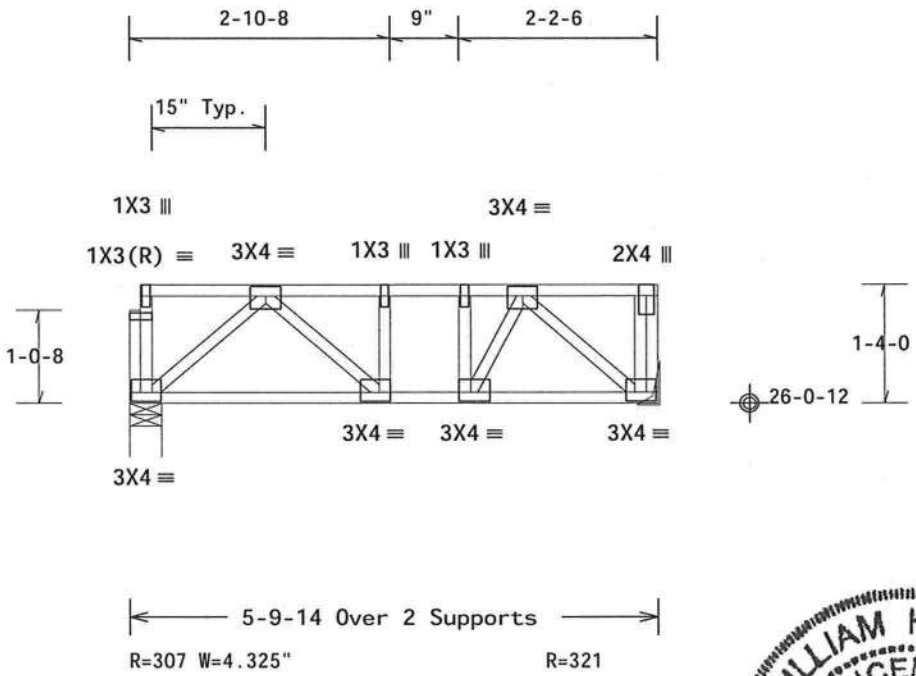

Design Crit: FBC2010Res/TPI-2007(STD)
FT/RT=12%(0%)/10(0)

10.03.11.0209.19 0TY1

PLT TYP. Wave

FL/-/5/-/-/R/-

Scale =.5"/Ft.

WILLIAM H. KRICK
LICENSE
No. 70861
STATE OF FLORIDA
PROFESSIONAL ENGINEER
01/22/2013

ALPINE
ITW Building Components Group Inc.
Haines City, FL 33844
FL COA #0 278

WARNING READ AND FOLLOW ALL NOTES ON THIS SHEET!
IMPORTANT FURNISH THIS DESIGN TO ALL CONTRACTORS INCLUDING INSTALLERS.

Trusses require extreme care in fabricating, handling, shipping, installing and bracing. Refer to and follow the latest edition of BCSI (Building Component Safety Information, by TPI and WTCA) for safety practices prior to performing these functions. Installers shall provide temporary bracing per BCSI. Unless noted otherwise, top chord shall have properly attached structural sheathing and bottom chord shall have a properly attached rigid ceiling. Locations shown for permanent lateral restraint of webs shall have bracing installed per BCSI sections B3, B7 or B10, as applicable.

ITW Building Components Group Inc. (ITWBCG) shall not be responsible for any deviation from this design, any failure to build the truss in conformance with ANSI/TPI 1, or for handling, shipping, installation and bracing of trusses. Apply plates to each face of truss and position as shown above and on the Joint Details, unless noted otherwise. Refer to drawings 160A-Z for standard plate positions. A seal on this drawing or cover page listing this drawing, indicates acceptance of professional engineering responsibility solely for the design shown. The suitability and use of this design for any structure is the responsibility of the Building Designer per ANSI/TPI 1 Sec.2. For more information see: This job's general notes page; ITW-BCG: www.itwbcg.com; TPI: www.tpinst.org; WTCA: www.sbcindustry.com; ICC: www.iccsafe.org

TC LL	40.0 PSF	REF	R9114- 81483
TC DL	10.0 PSF	DATE	01/22/13
BC DL	5.0 PSF	DRW	HCUSR9114 13022169
BC LL	0.0 PSF	HC-ENG	WHK/WHK
TOT.LD.	55.0 PSF	SEQN-	97175
DUR.FAC.	1.00	FROM	SDY
SPACING	24.0"	JREF-	1UT39114Z03

(120912F--Anderson Truss Co. Patel Residence -- Lot 1 Hills Of Windsor , ** - F3)

THIS DWG PREPARED FROM COMPUTER INPUT (LOADS & DIMENSIONS) SUBMITTED BY TRUSS MFR.

Top chord 4x2 SP_#1_12A
Bot chord 4x2 SP_#1_12A
Webs 4x2 SP_#3__12A

Lumber grades designated with "12A" use design values approved 1/5/2012 by ALSC.

Deflection meets L/360 live and L/240 total load. Creep increase factor for dead load is 1.50.

Truss must be installed as shown with top chord up.

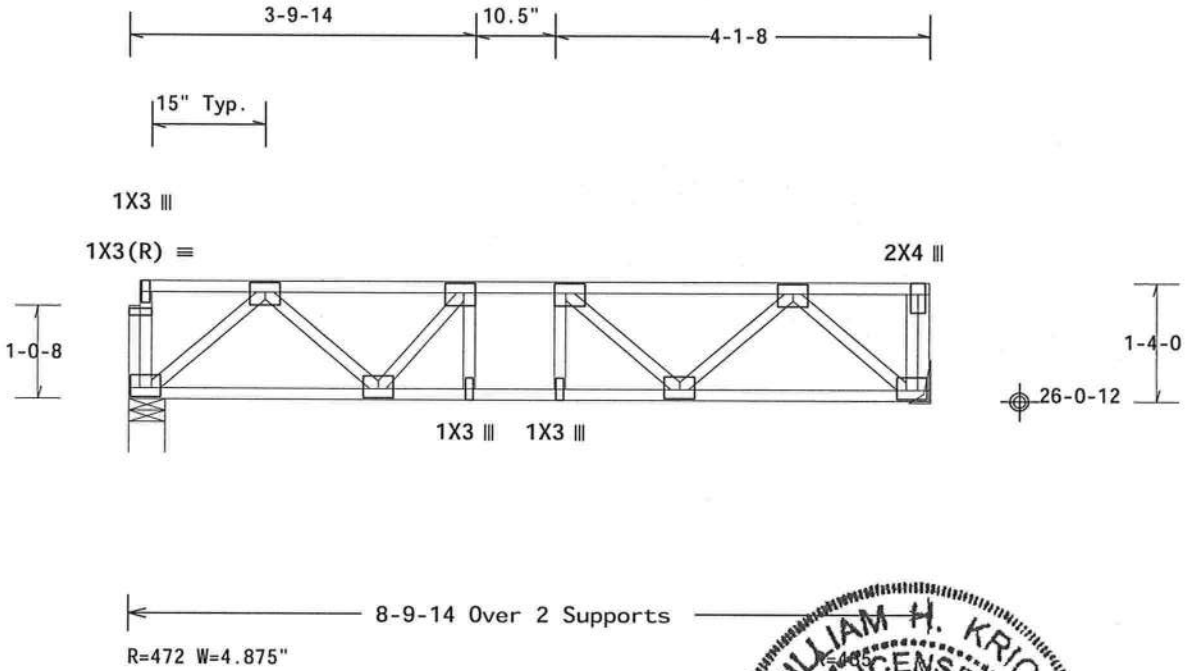

Note: All Plates Are 3X4 Except As Shown.

Design Crit: FBC2010Res/TPI-2007(STD)

PLT TYP. Wave

FT/RT=12%(0%)/10(0)

10.03.11.02.09.19 QTY 1

FL/-/5/-/-/R/-

Scale =.5"/Ft.

ALPINE

ITW Building Components Group Inc.

Haines City, FL 33844
FL COA #0 278

WARNING READ AND FOLLOW ALL NOTES ON THIS SHEET!
IMPORTANT FURNISH THIS DESIGN TO ALL CONTRACTORS INCLUDING INSTALLERS.

Trusses require extreme care in fabricating, handling, shipping, installing and bracing. Refer to and follow the latest edition of BCSI (Building Component Safety Information, by TPI and WTCA) for handling, installing & bracing practices prior to performing these functions. Installers shall provide temporary bracing per BCSI. Unless noted otherwise, top chord shall have properly attached structural sheathing and bottom chord shall have a properly attached rigid ceiling. Locations shown for permanent lateral restraint of webs shall have bracing installed per BCSI sections B3, B7 or B10, as applicable.

ITW Building Components Group Inc. (ITWBCG) shall not be responsible for any deviation from this design, any failure to build the truss in conformance with ANSI/TPI 1, or for handling, shipping, installation & bracing of trusses. Apply plates to each face of truss and position as shown above and on the Joint Details, unless noted otherwise. Refer to drawings 160A-Z for standard plate positions. A seal on this drawing or cover page listing this drawing, indicates acceptance of professional engineering responsibility solely for the design shown. The suitability and use of this design for any structure is the responsibility of the Building Designer per ANSI/TPI 1 Sec.2. For more information see: This job's general notes page; ITW-BCG: www.itwbcg.com; TPI: www.tpinst.org; WTCA: www.sbcindustry.com; ICC: www.iccsafe.org

WILLIAM H. KRICK
LICENSE
No. 70861
STATE OF FLORIDA
PROFESSIONAL ENGINEER

01/22/2013

TC LL	40.0 PSF	REF	R9114- 81484
TC DL	10.0 PSF	DATE	01/22/13
BC DL	5.0 PSF	DRW	HCUSR9114 13022170
BC LL	0.0 PSF	HC-ENG	WHK/WHK
TOT.LD.	55.0 PSF	SEQN-	97176
DUR.FAC.	1.00	FROM	SDY
SPACING	24.0"	JREF-	1UT39114Z03

(120912F--Anderson Truss Co. Patel Residence -- Lot 1 Hills Of Windsor , ** - F4)

THIS DWG PREPARED FROM COMPUTER INPUT (LOADS & DIMENSIONS) SUBMITTED BY TRUSS MFR.

Top chord 4x2 SP_#1_12A
Bot chord 4x2 SP_#1_12A
Webs 4x2 SP_#3__12A

Lumber grades designated with "12A" use design values approved 1/5/2012 by ALSC.

See detail STRBRIBR0211 for bracing and bridging recommendations.

Deflection meets L/360 live and L/240 total load. Creep increase factor for dead load is 1.50.

Truss must be installed as shown with top chord up.

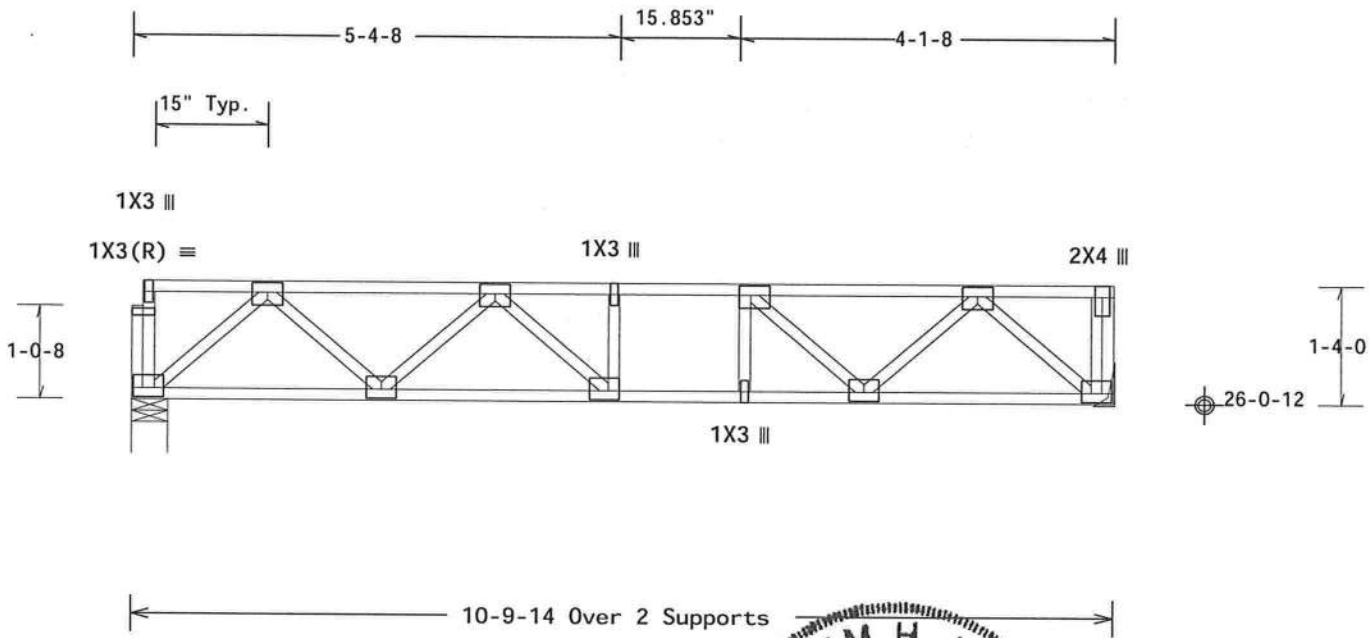

Note: All Plates Are 3X4 Except As Shown.

Design Crit: FBC2010Res/TPI-2007(STD)

PLT TYP. Wave

FT/RT=12%(0%)/10(0) 10.03.11.0209.19 QTY:1 FL/-/5/-/-/R/- Scale =.5"/Ft.

ALPINE

ITW Building Components Group Inc.

Haines City, FL 33844
FL COA #0 278

WARNING READ AND FOLLOW ALL NOTES ON THIS SHEET!
IMPORTANT FURNISH THIS DESIGN TO ALL CONTRACTORS INCLUDING INSTALLERS.

Trusses require extreme care in fabricating, handling, shipping, installing and bracing. Refer to and follow the latest edition of BCSI (Building Component Safety Information, by TPI and WTCA) for safety practices prior to performing these functions. Installers shall provide temporary bracing per BCSI. Unless noted otherwise, top chord shall have properly attached structural sheathing and bottom chord shall have a properly attached rigid ceiling. Locations shown for permanent lateral restraint of webs shall have bracing installed per BCSI sections B3, B7 or B10, as applicable.

ITW Building Components Group Inc. (ITWBCG) shall not be responsible for any deviation from this design, any failure to build the truss in conformance with ANSI/TPI 1, or for handling, shipping, installation and bracing of trusses. Apply plates to each face of truss and position as shown above and on the Joint Details, unless noted otherwise. Refer to drawings 160A-Z for standard plate positions. A seal on this drawing or cover page listing this drawing, indicates acceptance of professional engineering responsibility solely for the design shown. The suitability and use of this design for any structure is the responsibility of the Building Designer per ANSI/TPI 1 Sec.2. For more information see: This job's general notes page; ITW-BCG: www.itwbcg.com; TPI: www.tpinst.org; WTCA: www.sbcindustry.com; ICC: www.iccsafe.org

WILLIAM H. KRICK
LICENSE
No. 70861
STATE OF FLORIDA
PROFESSIONAL ENGINEER

01/22/2013

TC LL	40.0 PSF	REF	R9114- 81485
TC DL	10.0 PSF	DATE	01/22/13
BC DL	5.0 PSF	DRW	HCUSR9114 13022171
BC LL	0.0 PSF	HC-ENG	WHK/WHK
TOT.LD.	55.0 PSF	SEQN-	97177
DUR.FAC.	1.00	FROM	SDY
SPACING	24.0"	JREF-	1UT39114Z03

THIS DWG PREPARED FROM COMPUTER INPUT (LOADS & DIMENSIONS) SUBMITTED BY TRUSS MFR.

Top chord 4x2 SP_#1_12A
Bot chord 4x2 SP_#1_12A
Webs 4x2 SP_#3__12A

Lumber grades designated with "12A" use design values approved 1/5/2012 by ALSC.

+ 2x6 continuous strongback. See detail STRBRIBR0211 for bracing and bridging recommendations.

Deflection meets L/360 live and L/240 total load. Creep increase factor for dead load is 1.50.

Truss must be installed as shown with top chord up.

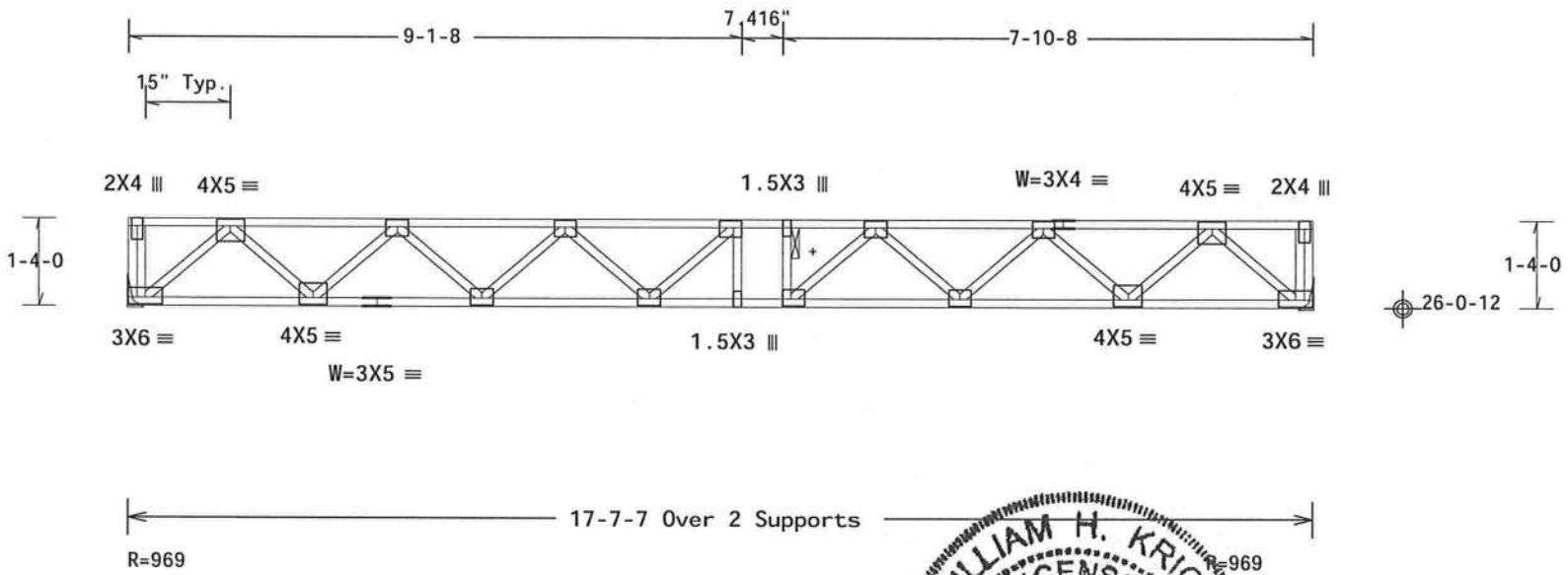

Note: All Plates Are 3X4 Except As Shown.

Design Crit: FBC2010Res/TPI-2007(STD)

PLT TYP. Wave FT/RT=12%(0%)/10(0) 10.03.11.02.09.19 QTY:16 FL/-/5/-/-/R/- Scale =.375"/Ft.

WILLIAM H. KRICK LICENSE No. 70861 STATE OF FLORIDA PROFESSIONAL ENGINEER 01/22/2013

ALPINE
ITW Building Components Group Inc.
Haines City, FL 33844
FL COA #0 278

WARNING READ AND FOLLOW ALL NOTES ON THIS SHEET!
IMPORTANT FURNISH THIS DESIGN TO ALL CONTRACTORS INCLUDING INSTALLERS.

Trusses require extreme care in fabricating, handling, shipping, installing and bracing. Refer to and follow the latest edition of BCSI (Building Component Safety Information, by TPI and WTCA) for general practices prior to performing these functions. Installers shall provide temporary bracing per BCSI. Unless noted otherwise, top chord shall have properly attached structural sheathing and bottom chord shall have a properly attached rigid ceiling. Locations shown for permanent lateral restraint of webs shall have bracing installed per BCSI sections B3, B7 or B10, as applicable.

ITW Building Components Group Inc. (ITWBCG) shall not be responsible for any deviation from this design, any failure to build the truss in conformance with ANSI/TPI 1, or for handling, shipping, installation and bracing of trusses. Apply plates to each face of truss and position as shown above and on the Joint Details, unless noted otherwise. Refer to drawings 160A-Z for standard plate positions. A seal on this drawing or cover page listing this drawing, indicates acceptance of professional engineering responsibility solely for the design shown. The suitability and use of this design for any structure is the responsibility of the Building Designer per ANSI/TPI 1 Sec.2. For more information see: This job's general notes page; ITW-BCG: www.itwbcg.com; TPI: www.tpinst.org; WTCA: www.sbcindustry.com; ICC: www.iccsafe.org

TC LL	40.0 PSF	REF	R9114- 81486
TC DL	10.0 PSF	DATE	01/22/13
BC DL	5.0 PSF	DRW	HCUSR9114 13022172
BC LL	0.0 PSF	HC-ENG	WHK/WHK
TOT.LD.	55.0 PSF	SEQN-	97178
DUR.FAC.	1.00	FROM	SDY
SPACING	24.0"	JREF-	1UT39114Z03

(120912F--Anderson Truss Co. Patel Residence -- Lot 1 Hills Of Windsor , ** - F6)

THIS DWG PREPARED FROM COMPUTER INPUT (LOADS & DIMENSIONS) SUBMITTED BY TRUSS MFR.

Top chord 4x2 SP_#1_12A
Bot chord 4x2 SP_#1_12A
Webs 4x2 SP_#3__12A

Lumber grades designated with "12A" use design values approved 1/5/2012 by ALSC.

+ 2x6 continuous strongback. See detail STRBRIBR0211 for bracing and bridging recommendations.

Deflection meets L/360 live and L/240 total load. Creep increase factor for dead load is 1.50.

Truss must be installed as shown with top chord up.

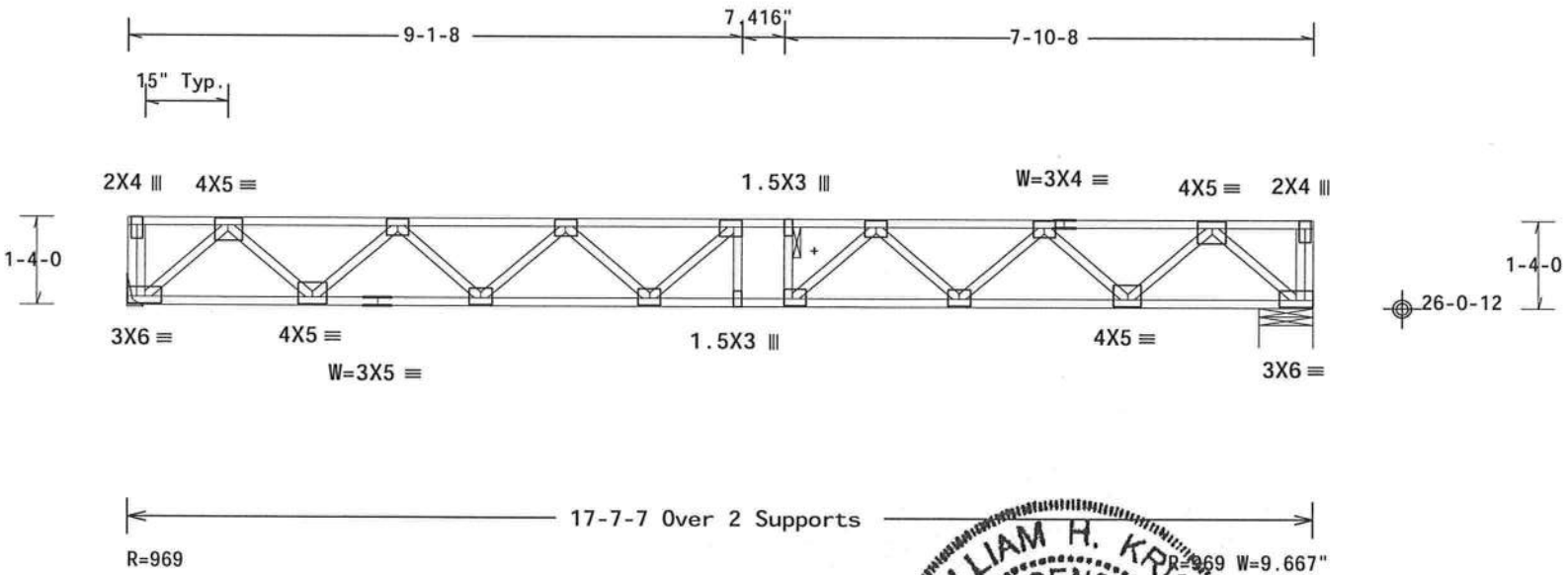

Note: All Plates Are 3X4 Except As Shown.

Design Crit: FBC2010Res/TPI-2007(STD)

PLT TYP. Wave

FT/RT=12%(0%)/10(0) 10.03.11.0209.19 QTY:2 FL/-/5/-/-/R/- Scale =.375"/Ft.

ALPINE

ITW Building Components Group Inc.

Haines City, FL 33844
FL COA #0 278

WARNING READ AND FOLLOW ALL NOTES ON THIS SHEET!
IMPORTANT FURNISH THIS DESIGN TO ALL CONTRACTORS INCLUDING INSTALLERS.

Trusses require extreme care in fabricating, handling, shipping, installing and bracing. Refer to and follow the latest edition of BCSI (Building Component Safety Information, by TPI and WTCA) for safety practices prior to performing these functions. Installers shall provide temporary bracing per BCSI. Unless noted otherwise, top chord shall have properly attached structural sheathing and bottom chord shall have a properly attached rigid ceiling. Locations shown for permanent lateral restraint of webs shall have bracing installed per BCSI sections B3, B7 or B10, as applicable.

ITW Building Components Group Inc. (ITWBCG) shall not be responsible for any deviation from this design, any failure to build the truss in conformance with ANSI/TPI 1, or for handling, shipping, installation and bracing of trusses. Apply plates to each face of truss and position as shown above and on the Joint Details, unless noted otherwise. Refer to drawings 160A-Z for standard plate positions. A seal on this drawing or cover page listing this drawing, indicates acceptance of professional engineering responsibility solely for the design shown. The suitability and use of this design for any structure is the responsibility of the Building Designer per ANSI/TPI 1 Sec.2. For more information see: This job's general notes page; ITW-BCG: www.itwbcg.com; TPI: www.tpinst.org; WTCA: www.sbcindustry.com; ICC: www.iccsafe.org

WILLIAM H. KRICK
LICENSE
No. 70861
STATE OF FLORIDA
PROFESSIONAL ENGINEER

01/22/2013

TC LL	40.0 PSF	REF	R9114- 81487
TC DL	10.0 PSF	DATE	01/22/13
BC DL	5.0 PSF	DRW	HCUSR9114 13022173
BC LL	0.0 PSF	HC-ENG	WHK/WHK
TOT.LD.	55.0 PSF	SEQN-	97179
DUR.FAC.	1.00	FROM	SDY
SPACING	24.0"	JREF-	1UT39114Z03

THIS DWG PREPARED FROM COMPUTER INPUT (LOADS & DIMENSIONS) SUBMITTED BY TRUSS MFR.

Top chord 4x2 SP_#1_12A
Bot chord 4x2 SP_#1_12A
Webs 4x2 SP_#3__12A

Lumber grades designated with "12A" use design values approved 1/5/2012 by ALSC.

Truss must be installed as shown with top chord up.

See detail STRBRIBRO211 for bracing and bridging recommendations.

Max JT VERT DEFL: LL: 0.34" DL: 0.24" recommended camber 3/8"

Deflection meets L/360 live and L/240 total load. Creep increase factor for dead load is 1.50.

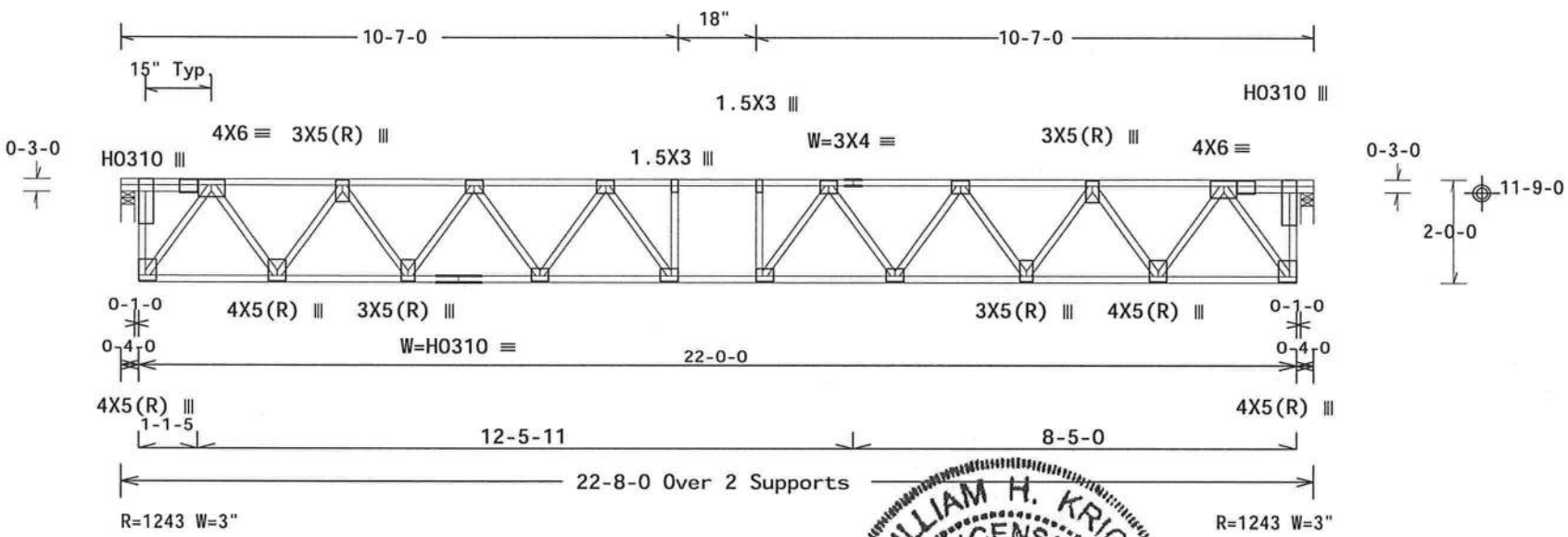

Note: All Plates Are 3X4 Except As Shown.

Design Crit: FBC2010Res/TPI-2007(STD)

PLT TYP. 20 Gauge HS,Wave

FT/RT=12%(0%)/10(0) 10.03.11.0209.19 QTY:26 FL/-/5/-/-/R/- Scale =.3125"/Ft.

WILLIAM H. KRICK LICENSE No. 70861 STATE OF FLORIDA PROFESSIONAL ENGINEER

01/22/2013

ALPINE

ITW Building Components Group Inc.

Haines City, FL 33844
FL COA #0 278

WARNING READ AND FOLLOW ALL NOTES ON THIS SHEET!
IMPORTANT FURNISH THIS DESIGN TO ALL CONTRACTORS INCLUDING INSTALLERS.

Trusses require extreme care in fabricating, handling, shipping, installing and bracing. Refer to and follow the latest edition of BCSI (Building Component Safety Information, by TPI and WTCA) for safety practices prior to performing these functions. Installers shall provide temporary bracing per BCSI. Unless noted otherwise, top chord shall have properly attached structural sheathing and bottom chord shall have a properly attached rigid ceiling. Locations shown for permanent lateral restraint of webs shall have bracing installed per BCSI sections B3, B7 or B10, as applicable.

ITW Building Components Group Inc. (ITWBCG) shall not be responsible for any deviation from this design, any failure to build the truss in conformance with ANSI/TPI 1, or for handling, shipping, installation and bracing of trusses. Apply plates to each face of truss and position as shown above and on the Joint Details, unless noted otherwise. Refer to drawings 160A-Z for standard plate positions. A seal on this drawing or cover page listing this drawing, indicates acceptance of professional engineering responsibility solely for the design shown. The suitability and use of this design for any structure is the responsibility of the Building Designer per ANSI/TPI 1 Sec.2. For more information see: This job's general notes page; ITW-BCG: www.itwbcg.com; TPI: www.tpinst.org; WTCA: www.sbcindustry.com; ICC: www.iccsafe.org

TC LL	40.0 PSF	REF	R9114- 81488
TC DL	10.0 PSF	DATE	01/22/13
BC DL	5.0 PSF	DRW	HCUSR9114 13022174
BC LL	0.0 PSF	HC-ENG	WHK/WHK
TOT.LD.	55.0 PSF	SEQN-	97180
DUR.FAC.	1.00	FROM	SDY
SPACING	24.0"	JREF-	1UT39114Z03

(120912F--Anderson Truss Co. Patel Residence -- Lot 1 Hills Of Windsor , ** - F8)

THIS DWG PREPARED FROM COMPUTER INPUT (LOADS & DIMENSIONS) SUBMITTED BY TRUSS MFR.

Top chord 4x2 SP_#1_12A
Bot chord 4x2 SP_#1_12A
Webs 4x2 SP_#3__12A

Lumber grades designated with "12A" use design values approved 1/5/2012 by ALSC.

(H1) = (J) Hanger not calculated (1)4x2 SP_#1_12A supporting member.

Deflection meets L/360 live and L/240 total load. Creep increase factor for dead load is 1.50.

Truss must be installed as shown with top chord up.

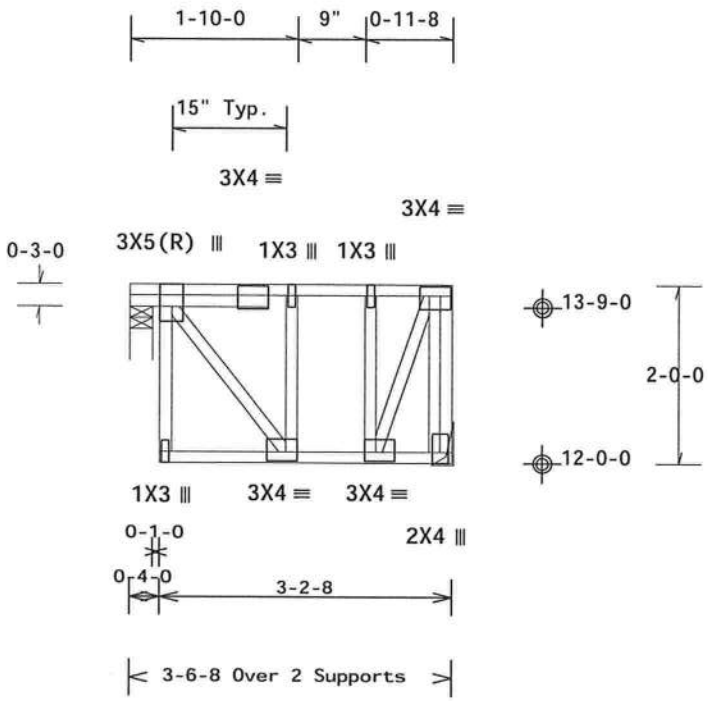

Design Crit: FBC2010Res/TPI-2007(STD)
FT/RT=12%(0%)/10(0) 10.03.11.0209.19 QTY:6 FL/-/5/-/-/R/-

PLT TYP. Wave

Scale =.5"/Ft.

ALPINE
ITW Building Components Group Inc.
Haines City, FL 33844
FL COA #0 278

WARNING READ AND FOLLOW ALL NOTES ON THIS SHEET!
IMPORTANT FURNISH THIS DESIGN TO ALL CONTRACTORS INCLUDING INSTALLERS.

Trusses require extreme care in fabricating, handling, shipping, installing and bracing. Refer to and follow the latest edition of BCSI (Building Component Safety Information, by TPI and WTCA) for safety practices prior to performing these functions. Installers shall provide temporary bracing per BCSI. Unless noted otherwise, top chord shall have properly attached structural sheathing and bottom chord shall have a properly attached rigid ceiling. Locations shown for permanent lateral restraint of webs shall have bracing installed per BCSI sections B3, B7 or B10, as applicable.

ITW Building Components Group Inc. (ITWBCG) shall not be responsible for any deviation from this design, any failure to build the truss in conformance with ANSI/TPI 1, or for handling, shipping, installation and bracing of trusses. Apply plates to each face of truss and position as shown above and on the Joint Details, unless noted otherwise. Refer to drawings 160A-Z for standard plate positions. A seal on this drawing or cover page listing this drawing, indicates acceptance of professional engineering responsibility solely for the design shown. The suitability and use of this design for any structure is the responsibility of the Building Designer per ANSI/TPI 1 Sec.2. For more information see: This job's general notes page; ITW-BCG: www.itwbcg.com; TPI: www.tpinst.org; WTCA: www.sbcindustry.com; ICC: www.iccsafe.org

WILLIAM H. KRICK
LICENSE
No. 70861
STATE OF FLORIDA
PROFESSIONAL ENGINEER
01/22/2013

TC LL	40.0 PSF	REF	R9114- 81489
TC DL	10.0 PSF	DATE	01/22/13
BC DL	5.0 PSF	DRW	HCUSR9114 13022175
BC LL	0.0 PSF	HC-ENG	WHK/WHK
TOT.LD.	55.0 PSF	SEQN-	97181
DUR.FAC.	1.00	FROM	SDY
SPACING	24.0"	JREF-	1UT39114Z03

THIS DWG PREPARED FROM COMPUTER INPUT (LOADS & DIMENSIONS) SUBMITTED BY TRUSS MFR.

Top chord 4x2 SP_#1_12A
Bot chord 4x2 SP_#1_12A
Webs 4x2 SP_#3__12A

Lumber grades designated with "12A" use design values approved 1/5/2012 by ALSC.

Deflection meets L/360 live and L/240 total load. Creep increase factor for dead load is 1.50.

Truss must be installed as shown with top chord up.

+ 2x6 continuous strongback. See detail STRBRIBR0211 for bracing and bridging recommendations.

Special loads
------(Lumber Dur.Fac.=1.00 / Plate Dur.Fac.=1.00)
TC- From 100 plf at 0.00 to 100 plf at 4.31
TC- From 50 plf at 4.31 to 50 plf at 12.31
TC- From 100 plf at 12.31 to 100 plf at 14.67
BC- From 10 plf at 0.00 to 10 plf at 4.31
BC- From 5 plf at 4.31 to 5 plf at 12.31
BC- From 10 plf at 12.31 to 10 plf at 14.67
TC- 202.44 lb Conc. Load at 4.31, 6.31, 8.31,10.31 12.31

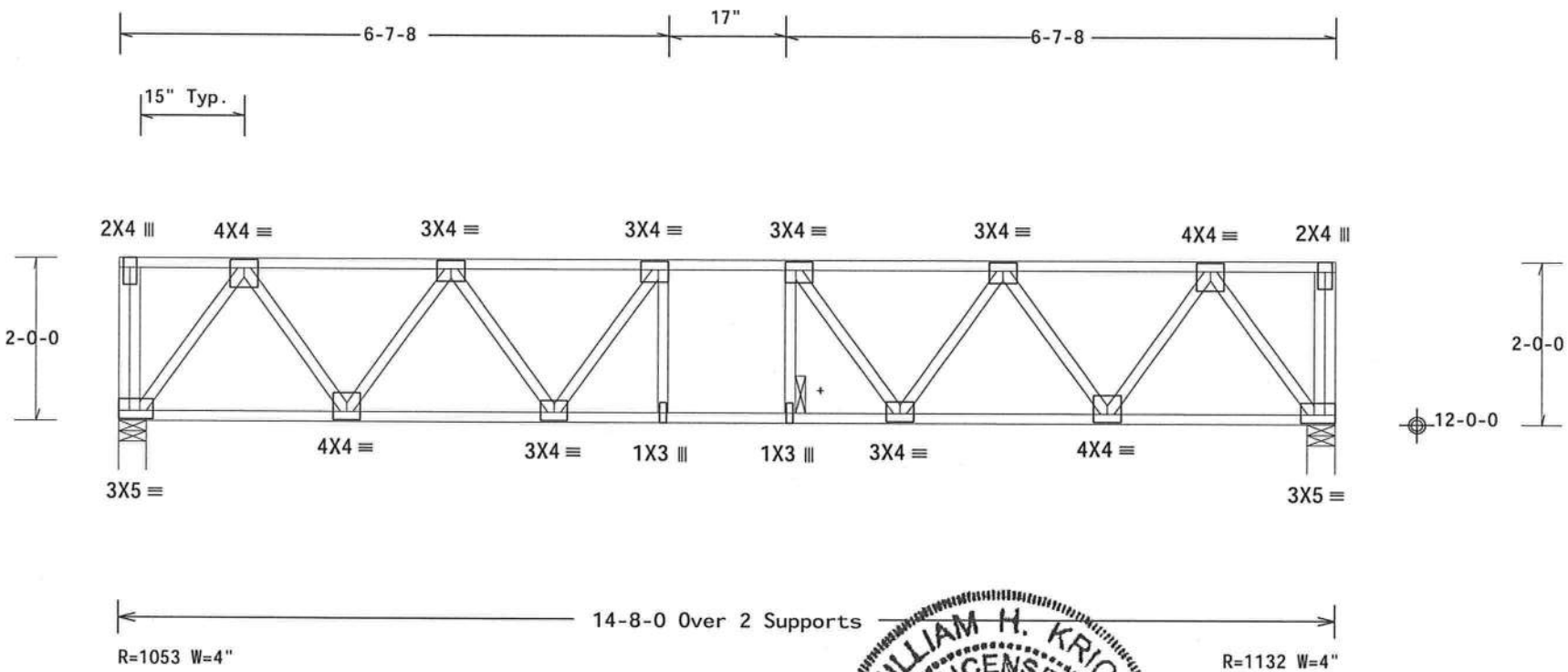

PLT TYP. Wave

Design Crit: FBC2010Res/TPI-2007(STD)
FT/RT=12%(0%)/10(0)

10.03.11.02.09.19 QTY 1

FL/-/5/-/-/R/-

Scale =.5"/Ft.

WILLIAM H. KRICK
LICENSE
No. 70861
STATE OF FLORIDA
PROFESSIONAL ENGINEER
01/22/2013

ALPINE
ITW Building Components Group Inc.
Haines City, FL 33844
FL COA #0 278

WARNING READ AND FOLLOW ALL NOTES ON THIS SHEET!
IMPORTANT FURNISH THIS DESIGN TO ALL CONTRACTORS INCLUDING INSTALLERS.

Trusses require extreme care in fabricating, handling, shipping, installing and bracing. Refer to and follow the latest edition of BCSI (Building Component Safety Information, by TPI and WTCA) for handling practices prior to performing these functions. Installers shall provide temporary bracing per BCSI. Unless noted otherwise, top chord shall have properly attached structural sheathing and bottom chord shall have a properly attached rigid ceiling. Locations shown for permanent lateral restraint of webs shall have bracing installed per BCSI sections B3, B7 or B10, as applicable.

ITW Building Components Group Inc. (ITWBCG) shall not be responsible for any deviation from this design, any failure to build the truss in conformance with ANSI/TPI 1, or for handling, shipping, installation & bracing of trusses. Apply plates to each face of truss and position as shown above and on the Joint Details, unless noted otherwise. Refer to drawings 160A-Z for standard plate positions. A seal on this drawing or cover page listing this drawing, indicates acceptance of professional engineering responsibility solely for the design shown. The suitability and use of this design for any structure is the responsibility of the Building Designer per ANSI/TPI 1 Sec.2. For more information see: This job's general notes page; ITW-BCG: www.itwbcg.com; TPI: www.tpinst.org; WTCA: www.sbcindustry.com; ICC: www.iccsafe.org

TC LL	40.0 PSF	REF	R9114- 81490
TC DL	10.0 PSF	DATE	01/21/13
BC DL	5.0 PSF	DRW	HCUSR9114 13021261
BC LL	0.0 PSF	HC-ENG	JB/AP
TOT.LD.	55.0 PSF	SEQN-	46855
DUR.FAC.	1.00	FROM	SDY
SPACING	24.0"	JREF-	1UT39114Z03

(120912F--Anderson Truss Co. Patel Residence -- Lot 1 Hills Of Windsor , ** - F10 2-PLY)

Top chord 4x2 SP_#1_12A
Bot chord 4x2 SP_#1_12A
Webs 4x2 SP_#3__12A

Lumber grades designated with "12A" use design values approved 1/5/2012 by ALSC.

Special loads
------(Lumber Dur.Fac.=1.00 / Plate Dur.Fac.=1.00)
TC- From 100 plf at 0.00 to 100 plf at 14.67
BC- From 10 plf at 0.00 to 10 plf at 14.67
TC- 682.92 lb Conc. Load at 2.31, 4.31,10.35,12.35

2 COMPLETE TRUSSES REQUIRED

See DWG CNSY42PL0109 for connection details of 2 ply trusses.

+ 2x6 continuous strongback. See detail STRBRIBR0211 for bracing and bridging recommendations.

Deflection meets L/360 live and L/240 total load. Creep increase factor for dead load is 1.50.

Truss must be installed as shown with top chord up.

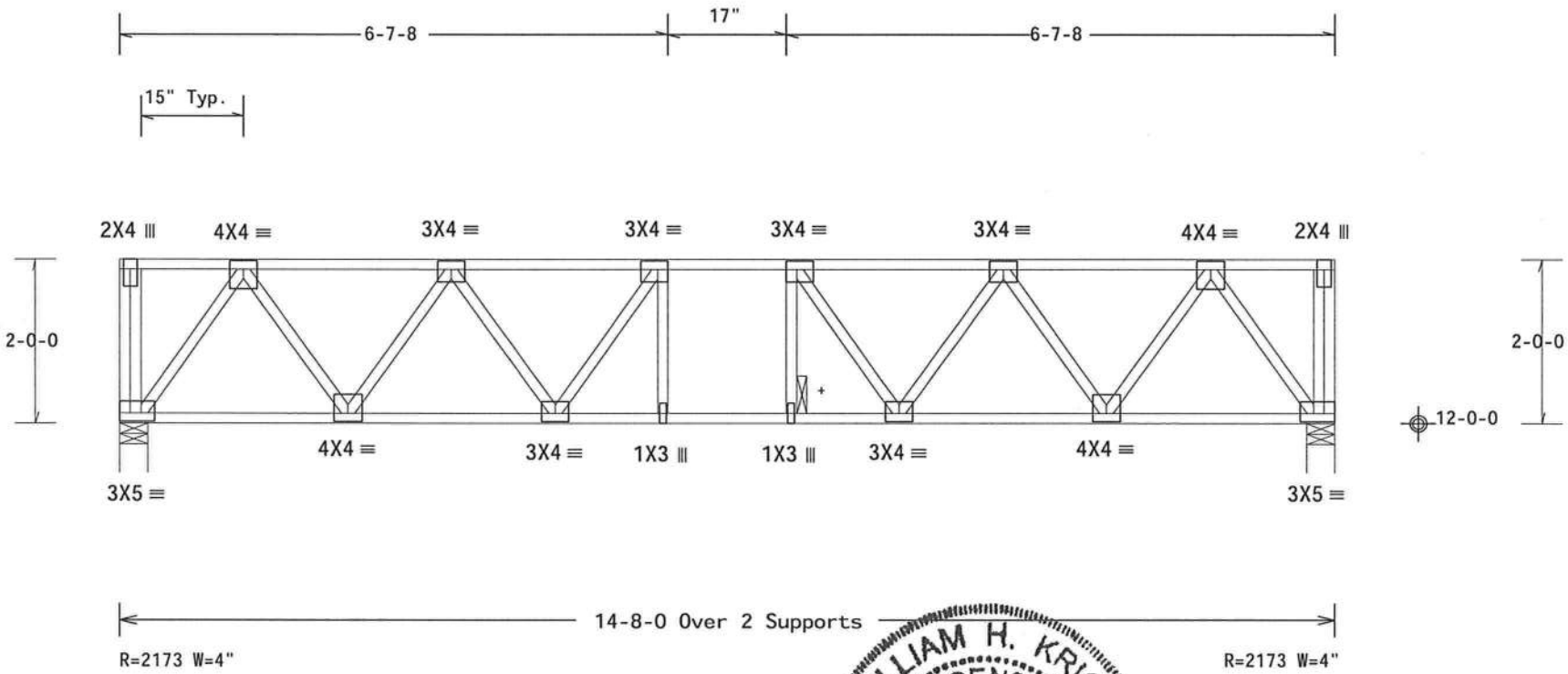

Design Crit: FBC2010Res/TPI-2007(STD)
FT/RT=12%(0%)/10(0) 10.03.11.0209.19 QTY:2 FL/-/5/-/-/R/-

PLT TYP. Wave

Scale =.5"/Ft.

WILLIAM H. KRICK LICENSE No. 70861 STATE OF FLORIDA PROFESSIONAL ENGINEER
01/22/2013

ALPINE
ITW Building Components Group Inc.
Haines City, FL 33844
FL COA #0 278

WARNING READ AND FOLLOW ALL NOTES ON THIS SHEET!
IMPORTANT FURNISH THIS DESIGN TO ALL CONTRACTORS INCLUDING INSTALLERS.

Trusses require extreme care in fabricating, handling, shipping, installing and bracing. Refer to and follow the latest edition of BCSI (Building Component Safety Information, by TPI and WTCA) for safety practices prior to performing these functions. Installers shall provide temporary bracing per BCSI. Unless noted otherwise, top chord shall have properly attached structural sheathing and bottom chord shall have a properly attached rigid ceiling. Locations shown for permanent lateral restraint of webs shall have bracing installed per BCSI sections B3, B7 or B10, as applicable.

ITW Building Components Group Inc. (ITWBCG) shall not be responsible for any deviation from this design, any failure to build the truss in conformance with ANSI/TPI 1, or for handling, shipping, installation and bracing of trusses. Apply plates to each face of truss and position as shown above and on the Joint Details, unless noted otherwise. Refer to drawings 160A-Z for standard plate positions. A seal on this drawing or cover page listing this drawing, indicates acceptance of professional engineering responsibility solely for the design shown. The suitability and use of this design for any structure is the responsibility of the Building Designer per ANSI/TPI 1 Sec.2. For more information see: This job's general notes page; ITW-BCG: www.itwbcg.com; TPI: www.tpinst.org; WTCA: www.sbcindustry.com; ICC: www.iccsafe.org

TC LL	40.0 PSF	REF	R9114- 81491
TC DL	10.0 PSF	DATE	01/21/13
BC DL	5.0 PSF	DRW	HCUSR9114 13021259
BC LL	0.0 PSF	HC-ENG	JB/AP
TOT.LD.	55.0 PSF	SEQN-	46856
DUR.FAC.	1.00	FROM	SDY
SPACING	24.0"	JREF-	1UT39114Z03

THIS DWG PREPARED FROM COMPUTER INPUT (LOADS & DIMENSIONS) SUBMITTED BY TRUSS MFR.

Top chord 4x2 SP_#1_12A
Bot chord 4x2 SP_#1_12A
Webs 4x2 SP_#3__12A

Lumber grades designated with "12A" use design values approved 1/5/2012 by ALSC.

Sheathing is required for any longitudinal(drag) forces. All connections to be designed by the building designer.

See detail STRBRIBR0211 for bracing and bridging recommendations.

Deflection meets L/360 live and L/240 total load. Creep increase factor for dead load is 1.50.

Truss must be installed as shown with top chord up.

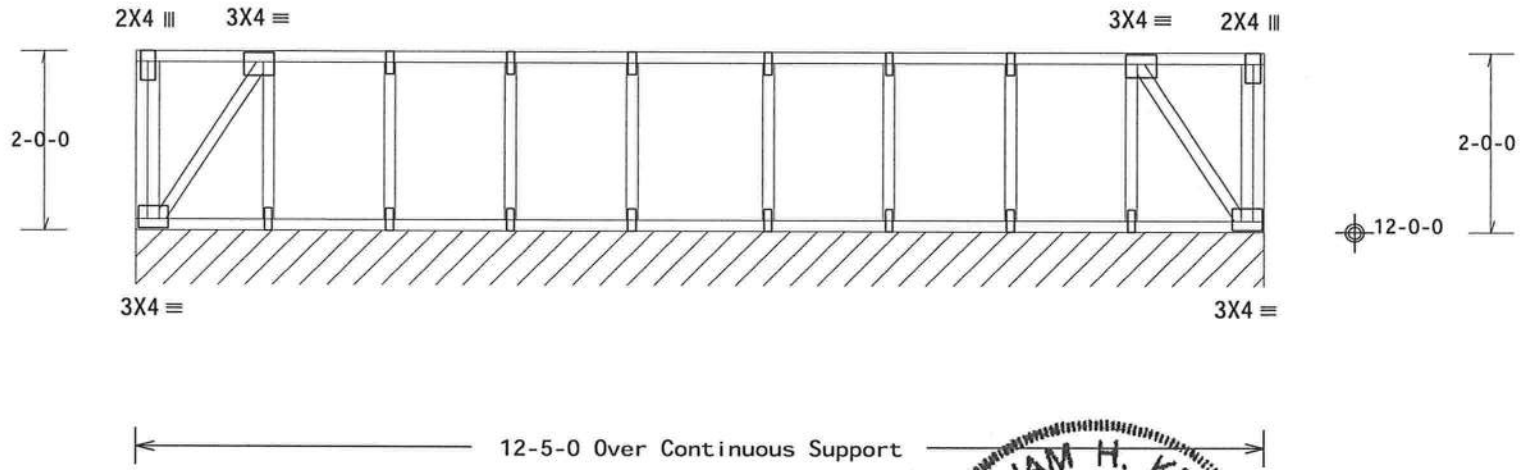

R=110 PLF W=12-5-0

Note: All Plates Are 1X3 Except As Shown.

Design Crit: FBC2010Res/TPI-2007(STD)

PLT TYP. Wave

FT/RT=12%(0%)/10(0)

10.03.11.0209.19 QTY:2

FL/-/5/-/-/R/-

Scale =.5"/Ft.

WILLIAM H. KRICK LICENSE No. 70861 STATE OF FLORIDA PROFESSIONAL ENGINEER

01/22/2013

ALPINE

ITW Building Components Group Inc.

Haines City, FL 33844
FL COA #0 278

WARNING READ AND FOLLOW ALL NOTES ON THIS SHEET!
IMPORTANT FURNISH THIS DESIGN TO ALL CONTRACTORS INCLUDING INSTALLERS.

Trusses require extreme care in fabricating, handling, shipping, installing and bracing. Refer to and follow the latest edition of BCSI (Building Component Safety Information, by TPI and WTCA) for general practices prior to performing these functions. Installers shall provide temporary bracing per BCSI. Unless noted otherwise, top chord shall have properly attached structural sheathing and bottom chord shall have a properly attached rigid ceiling. Locations shown for permanent lateral restraint of webs shall have bracing installed per BCSI sections B3, B7 or B10, as applicable.

ITW Building Components Group Inc. (ITWBCG) shall not be responsible for any deviation from this design, any failure to build the truss in conformance with ANSI/TPI 1, or for handling, shipping, installation and bracing of trusses. Apply plates to each face of truss and position as shown above and on the Joint Details, unless noted otherwise. Refer to drawings 160A-Z for standard plate positions. A seal on this drawing or cover page listing this drawing, indicates acceptance of professional engineering responsibility solely for the design shown. The suitability and use of this design for any structure is the responsibility of the Building Designer per ANSI/TPI 1 Sec.2. For more information see: This job's general notes page; ITW-BCG: www.itwbcg.com; TPI: www.tpinst.org; WTCA: www.sbcindustry.com; ICC: www.iccsafe.org

TC LL	40.0 PSF	REF	R9114- 81492
TC DL	10.0 PSF	DATE	01/21/13
BC DL	5.0 PSF	DRW	HCUSR9114 13021260
BC LL	0.0 PSF	HC-ENG	JB/AP
TOT.LD.	55.0 PSF	SEQN-	46787
DUR.FAC.	1.00	FROM	SDY
SPACING	24.0"	JREF-	1UT39114Z03

(120912F--Anderson Truss Co. Patel Residence -- Lot 1 Hills Of Windsor , ** - F12)

Top chord 4x2 SP_#1_12A
Bot chord 4x2 SP_#1_12A
Webs 4x2 SP_#3__12A

Lumber grades designated with "12A" use design values approved 1/5/2012 by ALSC.

Deflection meets L/360 live and L/240 total load. Creep increase factor for dead load is 1.50.

+ 2x6 continuous strongback. See detail STRBRIBR0211 for bracing and bridging recommendations.

(H1) = (J) Hanger not calculated (2)4x2 SP_#1_12A supporting member.
(H2) = (J) Hanger not calculated (2)4x2 SP_#1_12A supporting member.

Truss must be installed as shown with top chord up.

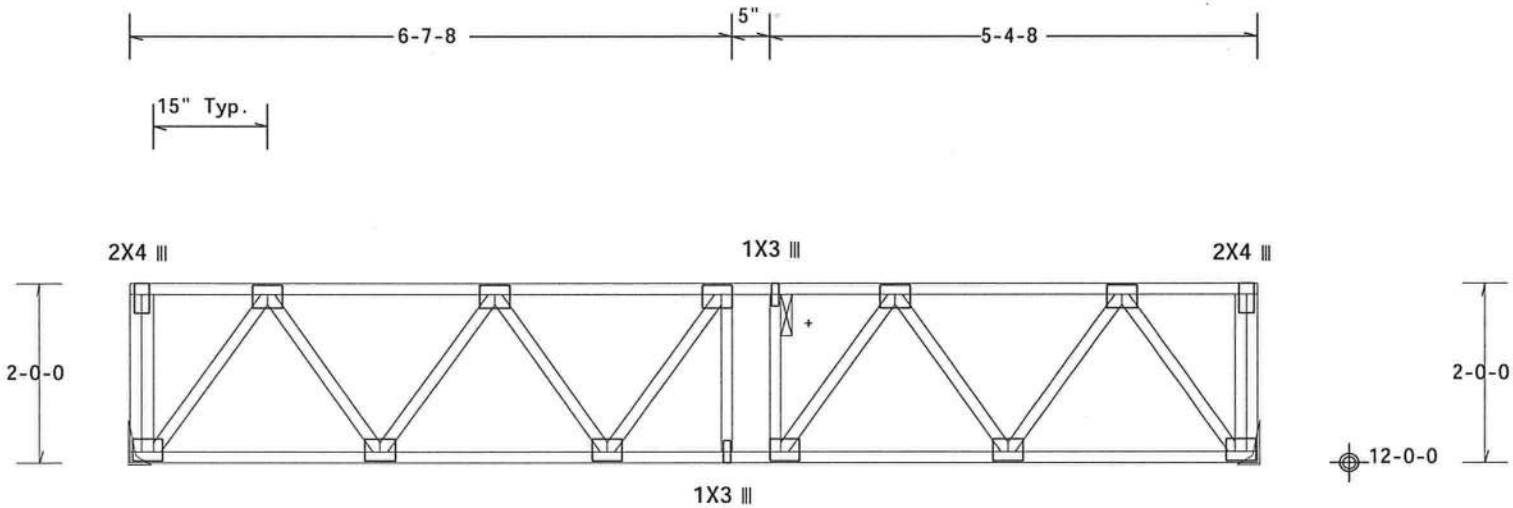

12-5-0 Over 2 Supports

R=683
H=H1

Note: All Plates Are 3X4 Except As Shown.

Design Crit: FBC2010Res/TPI-2007(STD)

PLT TYP. Wave

FT/RT=12%(0%)/10(0) 10.03.11.0209.19 QTY 24 FL/-/5/-/-/R/- Scale =.5"/Ft.

WILLIAM H. KRICK LICENSE No. 70861 STATE OF FLORIDA PROFESSIONAL ENGINEER
R=683 H=H1
01/22/2013

ALPINE
ITW Building Components Group Inc.
Haines City, FL 33844
FL COA #0 278

WARNING READ AND FOLLOW ALL NOTES ON THIS SHEET!
IMPORTANT FURNISH THIS DESIGN TO ALL CONTRACTORS INCLUDING INSTALLERS.

Trusses require extreme care in fabricating, handling, shipping, installing and bracing. Refer to and follow the latest edition of BCSI (Building Component Safety Information, by TPI and WTCA) for recommended practices prior to performing these functions. Installers shall provide temporary bracing per BCSI. Unless noted otherwise, top chord shall have properly attached structural sheathing and bottom chord shall have a properly attached rigid ceiling. Locations shown for permanent lateral restraint of webs shall have bracing installed per BCSI sections B3, B7 or B10, as applicable.

ITW Building Components Group Inc. (ITWBCG) shall not be responsible for any deviation from this design, any failure to build the truss in conformance with ANSI/TPI 1, or for handling, shipping, installation & bracing of trusses. Apply plates to each face of truss and position as shown above and on the Joint Details, unless noted otherwise. Refer to drawings 160A-Z for standard plate positions. A seal on this drawing or cover page listing this drawing, indicates acceptance of professional engineering responsibility solely for the design shown. The suitability and use of this design for any structure is the responsibility of the Building Designer per ANSI/TPI 1 Sec.2. For more information see: This job's general notes page; ITW-BCG: www.itwbcg.com; TPI: www.tpinst.org; WTCA: www.sbcindustry.com; ICC: www.iccsafe.org

TC LL	40.0 PSF	REF	R9114- 81493
TC DL	10.0 PSF	DATE	01/22/13
BC DL	5.0 PSF	DRW	HCUSR9114 13022176
BC LL	0.0 PSF	HC-ENG	WHK/WHK
TOT.LD.	55.0 PSF	SEQN-	97185
DUR.FAC.	1.00	FROM	SDY
SPACING	24.0"	JREF-	1UT39114Z03

(120912F--Anderson Truss Co. Patel Residence -- Lot 1 Hills Of Windsor , ** - F13)

Top chord 4x2 SP_#1_12A
Bot chord 4x2 SP_#1_12A
Webs 4x2 SP_#3__12A

Lumber grades designated with "12A" use design values approved 1/5/2012 by ALSC.

+ 2x6 continuous strongback. See detail STRBRIBR0211 for bracing and bridging recommendations.

Deflection meets L/360 live and L/240 total load. Creep increase factor for dead load is 1.50.

Truss must be installed as shown with top chord up.

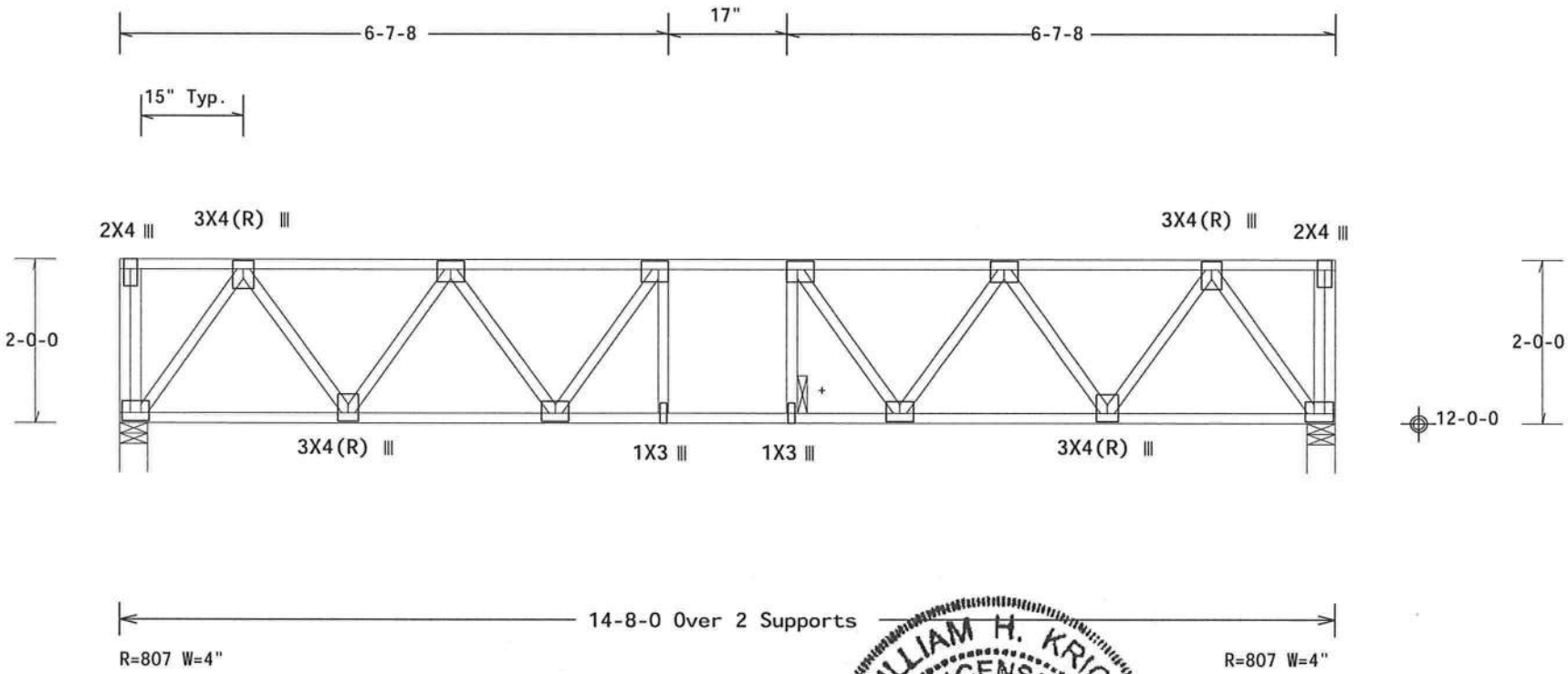

Note: All Plates Are 3X4 Except As Shown.

Design Crit: FBC2010Res/TPI-2007(STD)

PLT TYP. Wave FT/RT=12%(0%)/10(0) 10.03.11.0209.19 QTY:2 FL/-/5/-/-/R/- Scale =.5"/Ft.

ALPINE
ITW Building Components Group Inc.
Haines City, FL 33844
FL COA #0 278

WARNING READ AND FOLLOW ALL NOTES ON THIS SHEET!
IMPORTANT FURNISH THIS DESIGN TO ALL CONTRACTORS INCLUDING INSTALLERS.

Trusses require extreme care in fabricating, handling, shipping, installing and bracing. Refer to and follow the latest edition of BCSI (Building Component Safety Information, by TPI and WTCA) for safety practices prior to performing these functions. Installers shall provide temporary bracing per BCSI. Unless noted otherwise, top chord shall have properly attached structural sheathing and bottom chord shall have a properly attached rigid ceiling. Locations shown for permanent lateral restraint of webs shall have bracing installed per BCSI sections B3, B7 or B10, as applicable.

ITW Building Components Group Inc. (ITWBCG) shall not be responsible for any deviation from this design, any failure to build the truss in conformance with ANSI/TPI 1, or for handling, shipping, installation and bracing of trusses. Apply plates to each face of truss and position as shown above and on the Joint Details, unless noted otherwise. Refer to drawings 160A-Z for standard plate positions. A seal on this drawing or cover page listing this drawing, indicates acceptance of professional engineering responsibility solely for the design shown. The suitability and use of this design for any structure is the responsibility of the Building Designer per ANSI/TPI 1 Sec.2. For more information see: This job's general notes page; ITW-BCG: www.itwbcg.com; TPI: www.tpinst.org; WTCA: www.sbcindustry.com; ICC: www.iccsafe.org

WILLIAM H. KRICK
LICENSE
No. 70861
STATE OF FLORIDA
PROFESSIONAL ENGINEER
01/22/2013

TC LL	40.0 PSF	REF	R9114- 81494
TC DL	10.0 PSF	DATE	01/22/13
BC DL	5.0 PSF	DRW	HCUSR9114 13022177
BC LL	0.0 PSF	HC-ENG	WHK/WHK
TOT.LD.	55.0 PSF	SEQN-	97186
DUR.FAC.	1.00	FROM	SDY
SPACING	24.0"	JREF-	1UT39114Z03

THIS DWG PREPARED FROM COMPUTER INPUT (LOADS & DIMENSIONS) SUBMITTED BY TRUSS MFR.

Top chord 4x2 SP_#1_12A
Bot chord 4x2 SP_#1_12A
Webs 4x2 SP_#3__12A

Lumber grades designated with "12A" use design values approved 1/5/2012 by ALSC.

+ 2x6 continuous strongback. See detail STRBRIBR0211 for bracing and bridging recommendations.

Deflection meets L/360 live and L/240 total load. Creep increase factor for dead load is 1.50.

Truss must be installed as shown with top chord up.

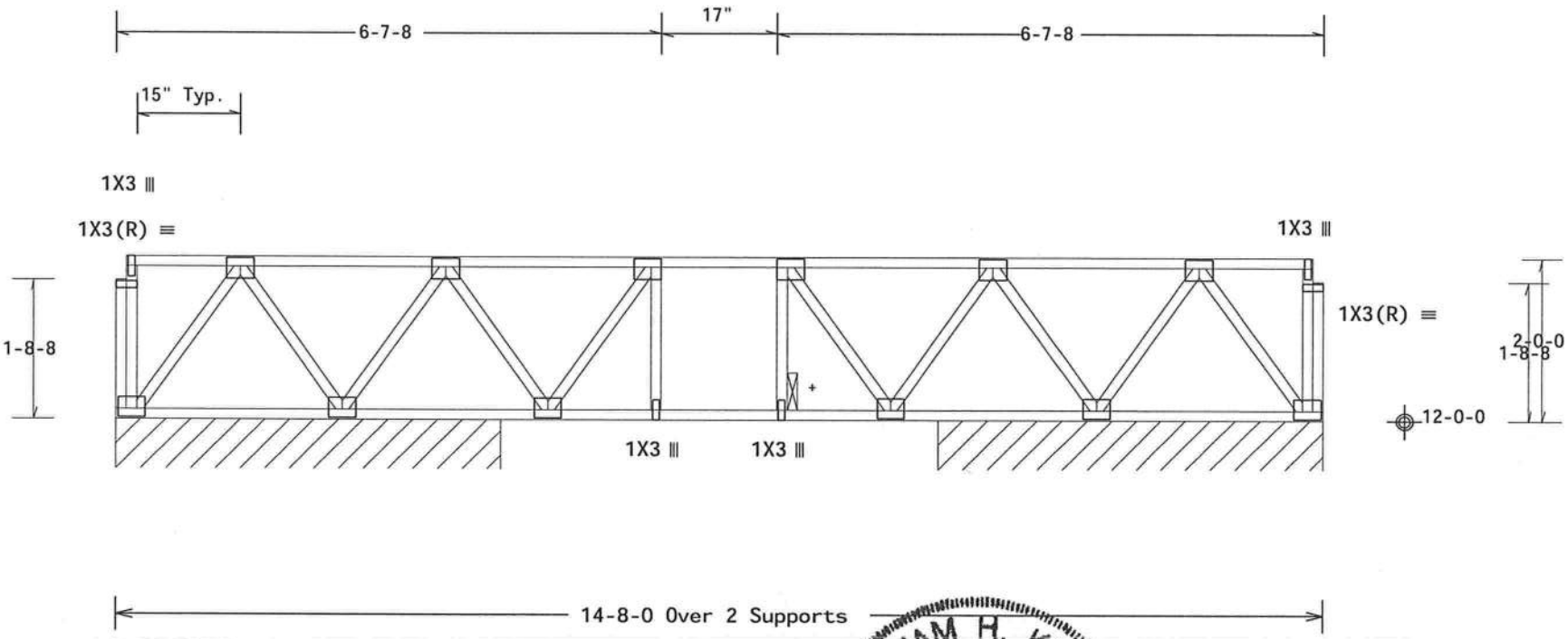

R=170 PLF W=4-8-0

Note: All Plates Are 3X4 Except As Shown.

Design Crit: FBC2010Res/TPI-2007(STD)

PLT TYP. Wave

FT/RT=12%(0%)/10(0) 10.03.11.0209.19 QTY:1 FL/-/5/-/-/R/- Scale =.5"/Ft.

WILLIAM H. KRICK LICENSE No. 70861 STATE OF FLORIDA PROFESSIONAL ENGINEER

01/22/2013

ALPINE
ITW Building Components Group Inc.
Haines City, FL 33844
FL COA #0 278

WARNING READ AND FOLLOW ALL NOTES ON THIS SHEET!
IMPORTANT FURNISH THIS DESIGN TO ALL CONTRACTORS INCLUDING INSTALLERS.

Trusses require extreme care in fabricating, handling, shipping, installing and bracing. Refer to and follow the latest edition of BCSI (Building Component Safety Information, by TPI and WTCA) for safety practices prior to performing these functions. Installers shall provide temporary bracing per BCSI. Unless noted otherwise, top chord shall have properly attached structural sheathing and bottom chord shall have a properly attached rigid ceiling. Locations shown for permanent lateral restraint shall have bracing installed per BCSI sections B3, B7 or B10, as applicable.

ITW Building Components Group Inc. (ITWBCG) shall not be responsible for any deviation from this drawing, any failure to build the truss in conformance with ANSI/TPI 1, or for handling, shipping, installation and bracing of trusses. Apply plates to each face of truss and position as shown above and on the Joint Details, unless noted otherwise. Refer to drawings 160A-Z for standard plate positions. A seal on this drawing or cover page listing this drawing, indicates acceptance of professional engineering responsibility solely for the design shown. The suitability and use of this design for any structure is the responsibility of the Building Designer per ANSI/TPI 1 Sec.2. For more information see: This job's general notes page; ITW-BCG: www.itwbcg.com; TPI: www.tpinst.org; WTCA: www.sbcindustry.com; ICC: www.iccsafe.org

TC LL	40.0 PSF	REF	R9114- 81495
TC DL	10.0 PSF	DATE	01/22/13
BC DL	5.0 PSF	DRW	HCUSR9114 13022178
BC LL	0.0 PSF	HC-ENG	WHK/WHK
TOT.LD.	55.0 PSF	SEQN-	97187
DUR.FAC.	1.00	FROM	SDY
SPACING	24.0"	JREF-	1UT39114Z03

(120912F--Anderson Truss Co. Patel Residence -- Lot 1 Hills Of Windsor , ** - F15)

Top chord 4x2 SP_#1_12A
Bot chord 4x2 SP_#1_12A
Webs 4x2 SP_#3__12A

Lumber grades designated with "12A" use design values approved 1/5/2012 by ALSC.

Deflection meets L/360 live and L/240 total load. Creep increase factor for dead load is 1.50.

Truss must be installed as shown with top chord up.

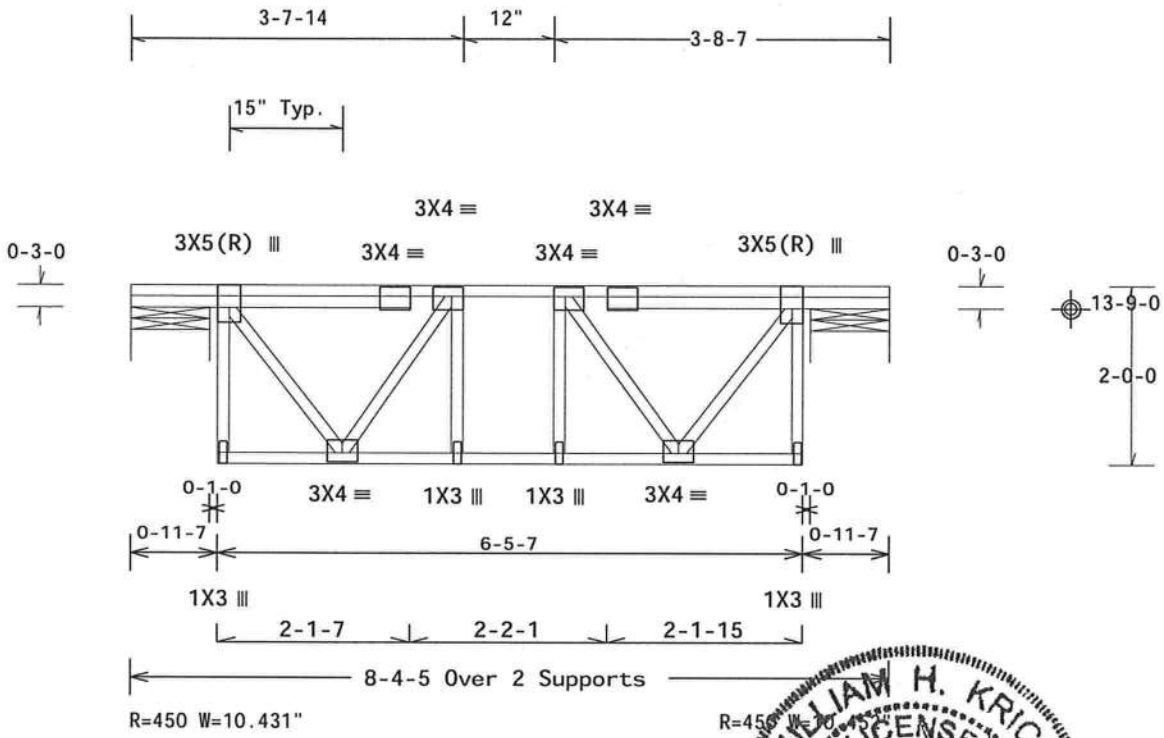

Design Crit: FBC2010Res/TPI-2007(STD)
FT/RT=12%(0%)/10(0)

PLT TYP. Wave

10.03.11.02.09.19 QTY 1

FL/-/5/-/-/R/-

Scale =.5"/Ft.

WILLIAM H. KRICK
LICENSE
No. 70861
STATE OF FLORIDA
PROFESSIONAL ENGINEER
01/22/2013

ALPINE
ITW Building Components Group Inc.
Haines City, FL 33844
FL COA #0 278

WARNING READ AND FOLLOW ALL NOTES ON THIS SHEET!
IMPORTANT FURNISH THIS DESIGN TO ALL CONTRACTORS INCLUDING INSTALLERS.

Trusses require extreme care in fabricating, handling, shipping, installing and bracing. Refer to and follow the latest edition of BCSI (Building Component Safety Information, by TPI and WTCA) for safety practices prior to performing these functions. Installers shall provide temporary bracing per BCSI. Unless noted otherwise, top chord shall have properly attached structural sheathing and bottom chord shall have a properly attached rigid ceiling. Locations shown for permanent lateral restraint of webs shall have bracing installed per BCSI sections B3, B7 or B10, as applicable.

ITW Building Components Group Inc. (ITWBCG) shall not be responsible for any deviation from this design, any failure to build the truss in conformance with ANSI/TPI 1, or for handling, shipping, installation & bracing of trusses. Apply plates to each face of truss and position as shown above and on the Joint Details, unless noted otherwise. Refer to drawings 160A-Z for standard plate positions. A seal on this drawing or cover page listing this drawing, indicates acceptance of professional engineering responsibility solely for the design shown. The suitability and use of this design for any structure is the responsibility of the Building Designer per ANSI/TPI 1 Sec.2. For more information see: This job's general notes page; ITW-BCG: www.itwbcg.com; TPI: www.tpinst.org; WTCA: www.sbcindustry.com; ICC: www.iccsafe.org

TC LL	40.0 PSF	REF	R9114- 81496
TC DL	10.0 PSF	DATE	01/22/13
BC DL	5.0 PSF	DRW	HCUSR9114 13022179
BC LL	0.0 PSF	HC-ENG	WHK/WHK
TOT.LD.	55.0 PSF	SEQN-	97188
DUR.FAC.	1.00	FROM	SDY
SPACING	24.0"	JREF-	1UT39114Z03

(120912F--Anderson Truss Co. Patel Residence -- Lot 1 Hills Of Windsor , ** - F16)

Top chord 4x2 SP_#1_12A
Bot chord 4x2 SP_#1_12A
Webs 4x2 SP_#3__12A

Lumber grades designated with "12A" use design values approved 1/5/2012 by ALSC.

+ 2x6 continuous strongback. See detail STRBRIBR0211 for bracing and bridging recommendations.

Deflection meets L/360 live and L/240 total load. Creep increase factor for dead load is 1.50.

Truss must be installed as shown with top chord up.

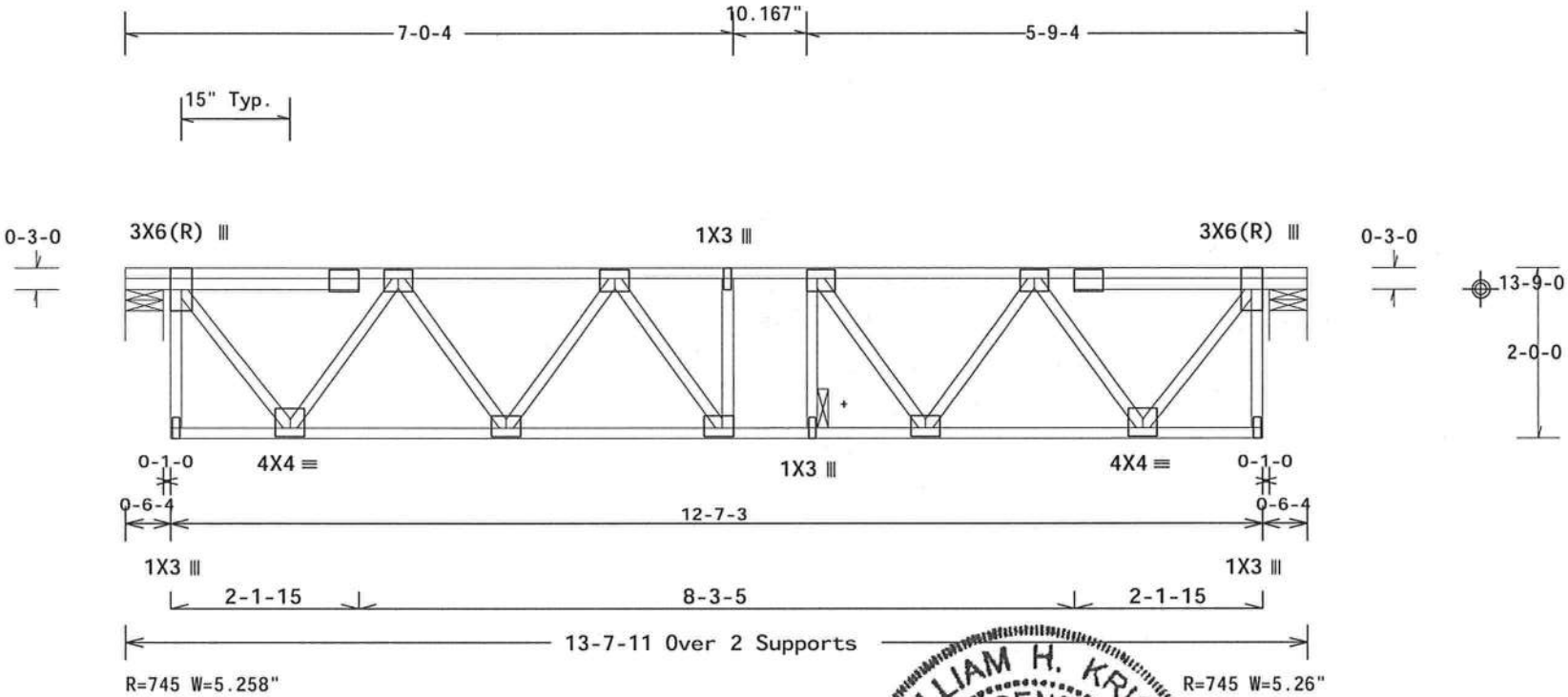

Note: All Plates Are 3X4 Except As Shown.

Design Crit: FBC2010Res/TPI-2007(STD)

PLT TYP. Wave

FT/RT=12%(0%)/10(0) 10.03.11.0209.19 QTY:1 FL/-/5/-/-/R/- Scale =.5"/Ft.

WILLIAM H. KRICK LICENSE No. 70861 STATE OF FLORIDA PROFESSIONAL ENGINEER

01/22/2013

ALPINE
ITW Building Components Group Inc.
Haines City, FL 33844
FL COA #0 278

WARNING READ AND FOLLOW ALL NOTES ON THIS SHEET!
IMPORTANT FURNISH THIS DESIGN TO ALL CONTRACTORS INCLUDING INSTALLERS.

Trusses require extreme care in fabricating, handling, shipping, installing and bracing. Refer to and follow the latest edition of BCSI (Building Component Safety Information, by TPI and WTCA) for safety practices prior to performing these functions. Installers shall provide temporary bracing per BCSI. Unless noted otherwise, top chord shall have properly attached structural sheathing and bottom chord shall have a properly attached rigid ceiling. Locations shown for permanent lateral restraint of webs shall have bracing installed per BCSI sections B3, B7 or B10, as applicable.

ITW Building Components Group Inc. (ITWBCG) shall not be responsible for any deviation from this design, any failure to build the truss in conformance with ANSI/TPI 1, or for handling, shipping, installation and bracing of trusses. Apply plates to each face of truss and position as shown above and on the Joint Details, unless noted otherwise. Refer to drawings 160A-Z for standard plate positions. A seal on this drawing or cover page listing this drawing, indicates acceptance of professional engineering responsibility solely for the design shown. The suitability and use of this design for any structure is the responsibility of the Building Designer per ANSI/TPI 1 Sec.2. For more information see: This job's general notes page; ITW-BCG: www.itwbcg.com; TPI: www.tpinst.org; WTCA: www.sbcindustry.com; ICC: www.iccsafe.org

TC LL	40.0 PSF	REF	R9114- 81497
TC DL	10.0 PSF	DATE	01/22/13
BC DL	5.0 PSF	DRW	HCUSR9114 13022180
BC LL	0.0 PSF	HC-ENG	WHK/WHK
TOT.LD.	55.0 PSF	SEQN-	97189
DUR.FAC.	1.00	FROM	SDY
SPACING	24.0"	JREF-	1UT39114Z03

(120912F--Anderson Truss Co. Patel Residence -- Lot 1 Hills Of Windsor , ** - F17)

Top chord 4x2 SP_#1_12A
Bot chord 4x2 SP_#1_12A
Webs 4x2 SP_#3__12A

Lumber grades designated with "12A" use design values approved 1/5/2012 by ALSC.

See detail STRBRIBR0211 for bracing and bridging recommendations.

Deflection meets L/360 live and L/240 total load. Creep increase factor for dead load is 1.50.

Truss must be installed as shown with top chord up.

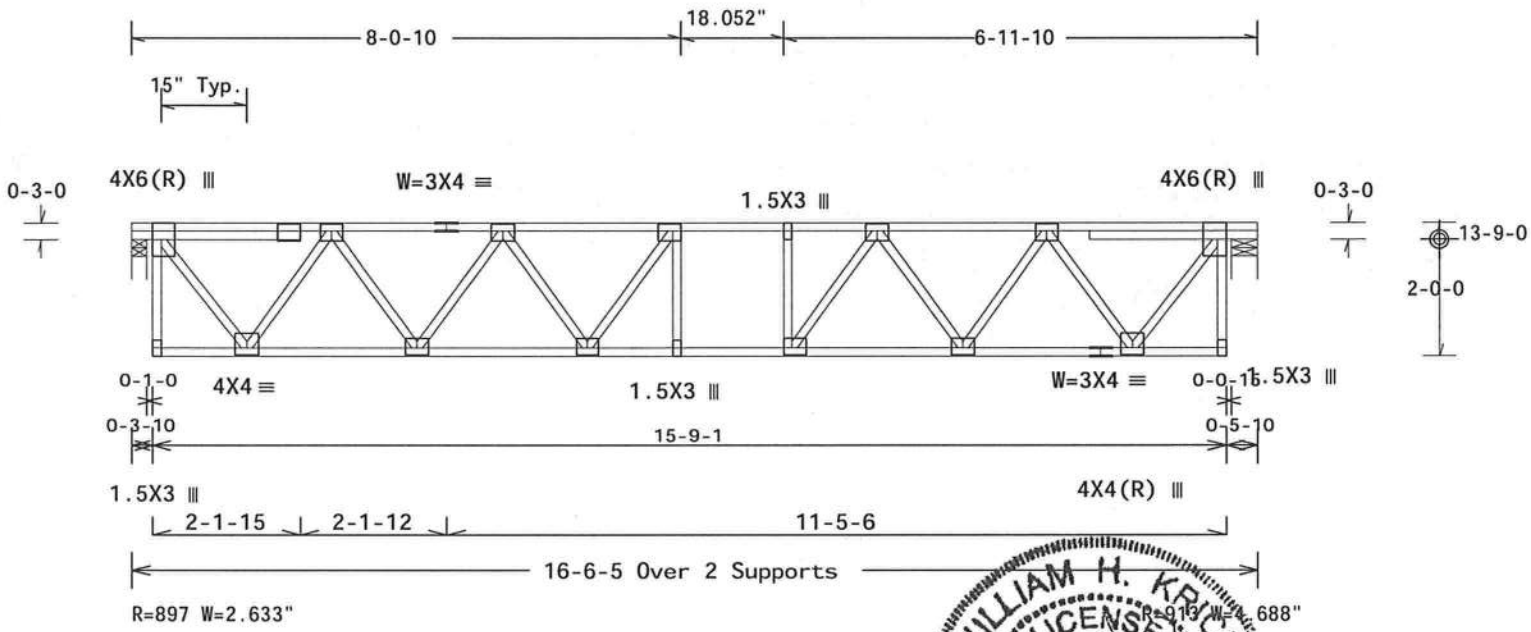

Note: All Plates Are 3X4 Except As Shown.

Design Crit: FBC2010Res/TPI-2007(STD)

PLT TYP. Wave

FT/RT=12%(0%)/10(0)

10.03.11.02.09.19 QTY 1

FL/-/5/-/-/R/-

Scale =.375"/Ft.

ALPINE

ITW Building Components Group Inc.

Haines City, FL 33844
FL COA #0 278

WARNING READ AND FOLLOW ALL NOTES ON THIS SHEET!
IMPORTANT FURNISH THIS DESIGN TO ALL CONTRACTORS INCLUDING INSTALLERS.

Trusses require extreme care in fabricating, handling, shipping, installing and bracing. Refer to and follow the latest edition of BCSI (Building Component Safety Information, by TPI and WTCA) for general practices prior to performing these functions. Installers shall provide temporary bracing per BCSI. Unless noted otherwise, top chord shall have properly attached structural sheathing and bottom chord shall have a properly attached rigid ceiling. Locations shown for permanent lateral restraint of webs shall have bracing installed per BCSI sections B3, B7 or B10, as applicable.

ITW Building Components Group Inc. (ITWBCG) shall not be responsible for any deviation from this design, any failure to build the truss in conformance with ANSI/TPI 1, or for handling, shipping, installation & bracing of trusses. Apply plates to each face of truss and position as shown above and on the Joint Details, unless noted otherwise. Refer to drawings 160A-Z for standard plate positions. A seal on this drawing or cover page listing this drawing, indicates acceptance of professional engineering responsibility solely for the design shown. The suitability and use of this design for any structure is the responsibility of the Building Designer per ANSI/TPI 1 Sec.2. For more information see: This job's general notes page; ITW-BCG: www.itwbcg.com; TPI: www.tpinst.org; WTCA: www.sbcindustry.com; ICC: www.iccsafe.org

WILLIAM H. KRICK
LICENSE
No. 70861
STATE OF FLORIDA
PROFESSIONAL ENGINEER

01/22/2013

TC LL	40.0 PSF	REF	R9114- 81498
TC DL	10.0 PSF	DATE	01/22/13
BC DL	5.0 PSF	DRW	HCUSR9114 13022181
BC LL	0.0 PSF	HC-ENG	WHK/WHK
TOT.LD.	55.0 PSF	SEQN-	97190
DUR.FAC.	1.00	FROM	SDY
SPACING	24.0"	JREF-	1UT39114Z03

(120912F--Anderson Truss Co. Patel Residence -- Lot 1 Hills Of Windsor , ** - F18)

Top chord 4x2 SP_#1_12A
Bot chord 4x2 SP_#1_12A
Webs 4x2 SP_#3__12A

Lumber grades designated with "12A" use design values approved 1/5/2012 by ALSC.

+ 2x6 continuous strongback. See detail STRBRIBR0211 for bracing and bridging recommendations.

Deflection meets L/360 live and L/240 total load. Creep increase factor for dead load is 1.50.

Truss must be installed as shown with top chord up.

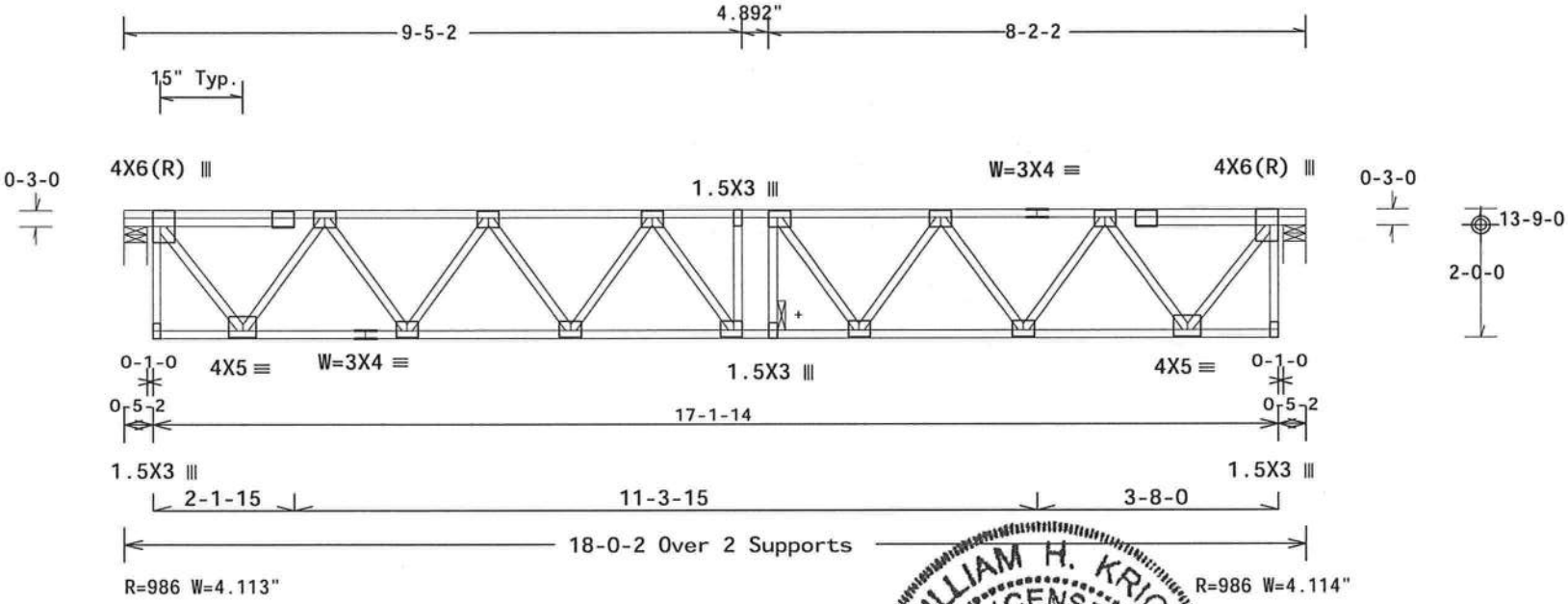

Note: All Plates Are 3X4 Except As Shown.

Design Crit: FBC2010Res/TPI-2007(STD)

PLT TYP. Wave

FT/RT=12%(0%)/10(0) 10.03.11.0209.19 QTY 1 FL/-/5/-/-/R/- Scale =.375"/Ft.

ALPINE

ITW Building Components Group Inc.

Haines City, FL 33844
FL COA #0 278

WARNING READ AND FOLLOW ALL NOTES ON THIS SHEET!
IMPORTANT FURNISH THIS DESIGN TO ALL CONTRACTORS INCLUDING INSTALLERS.

Trusses require extreme care in fabricating, handling, shipping, installing and bracing. Refer to and follow the latest edition of BCSI (Building Component Safety Information, by TPI and WTCA) for safety practices prior to performing these functions. Installers shall provide temporary bracing per BCSI. Unless noted otherwise, top chord shall have properly attached structural sheathing and bottom chord shall have a properly attached rigid ceiling. Locations shown for permanent lateral restraint of webs shall have bracing installed per BCSI sections B3, B7 or B10, as applicable.

ITW Building Components Group Inc. (ITWBCG) shall not be responsible for any deviation from this design, any failure to build the truss in conformance with ANSI/TPI 1, or for handling, shipping, installation and bracing of trusses. Apply plates to each face of truss and position as shown above and on the Joint Details, unless noted otherwise. Refer to drawings 160A-Z for standard plate positions. A seal on this drawing or cover page listing this drawing, indicates acceptance of professional engineering responsibility solely for the design shown. The suitability and use of this design for any structure is the responsibility of the Building Designer per ANSI/TPI 1 Sec.2. For more information see: This job's general notes page; ITW-BCG: www.itwbcg.com; TPI: www.tpinst.org; WTCA: www.sbcindustry.com; ICC: www.iccsafe.org

WILLIAM H. KRICK
LICENSE
No. 70861
STATE OF FLORIDA
PROFESSIONAL ENGINEER

01/22/2013

TC LL	40.0 PSF	REF	R9114- 81499
TC DL	10.0 PSF	DATE	01/22/13
BC DL	5.0 PSF	DRW	HCUSR9114 13022182
BC LL	0.0 PSF	HC-ENG	WHK/WHK
TOT.LD.	55.0 PSF	SEQN-	97191
DUR.FAC.	1.00	FROM	SDY
SPACING	24.0"	JREF-	1UT39114Z03

(120912F--Anderson Truss Co. Patel Residence -- Lot 1 Hills Of Windsor , ** - F19)

Top chord 4x2 SP_#1_12A
Bot chord 4x2 SP_#1_12A
Webs 4x2 SP_#3__12A

Lumber grades designated with "12A" use design values approved 1/5/2012 by ALSC.

+ 2x6 continuous strongback. See detail STRBRIBR0211 for bracing and bridging recommendations.

Deflection meets L/360 live and L/240 total load. Creep increase factor for dead load is 1.50.

Truss must be installed as shown with top chord up.

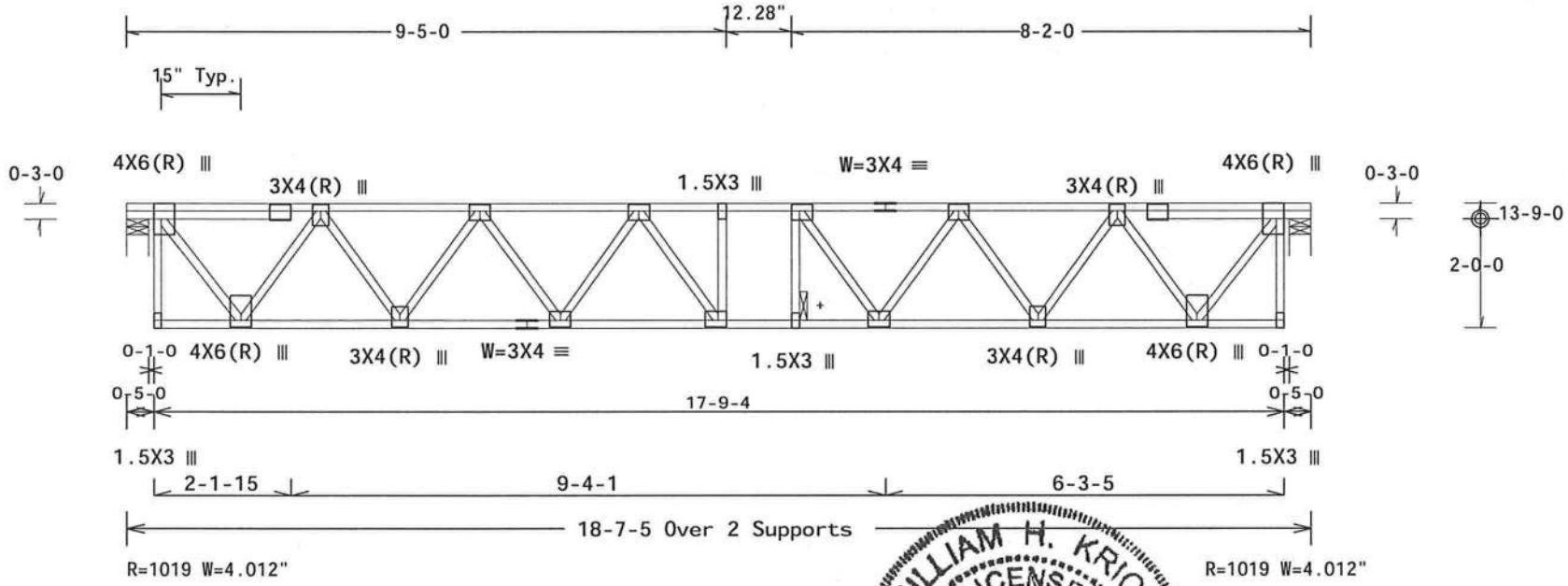

Note: All Plates Are 3X4 Except As Shown.

Design Crit: FBC2010Res/TPI-2007(STD)

PLT TYP. Wave

FT/RT=12%(0%)/10(0) 10.03.11.0209.19 0TY1 FL/-/5/-/-/R/- Scale =.375"/Ft.

WILLIAM H. KRICK LICENSE No. 70861 STATE OF FLORIDA PROFESSIONAL ENGINEER

01/22/2013

ALPINE

ITW Building Components Group Inc.

Haines City, FL 33844
FL COA #0 278

WARNING READ AND FOLLOW ALL NOTES ON THIS SHEET!
IMPORTANT FURNISH THIS DESIGN TO ALL CONTRACTORS INCLUDING INSTALLERS.

Trusses require extreme care in fabricating, handling, shipping, installing and bracing. Refer to and follow the latest edition of BCSI (Building Component Safety Information, by TPI and WTCA) for general practices prior to performing these functions. Installers shall provide temporary bracing per BCSI. Unless noted otherwise, top chord shall have properly attached structural sheathing and bottom chord shall have a properly attached rigid ceiling. Locations shown for permanent lateral restraint of webs shall have bracing installed per BCSI sections B3, B7 or B10, as applicable.

ITW Building Components Group Inc. (ITWBCG) shall not be responsible for any deviation from this design, any failure to build the truss in conformance with ANSI/TPI 1, or for handling, shipping, installation and bracing of trusses. Apply plates to each face of truss and position as shown above and on the Joint Details, unless noted otherwise. Refer to drawings 160A-Z for standard plate positions. A seal on this drawing or cover page listing this drawing, indicates acceptance of professional engineering responsibility solely for the design shown. The suitability and use of this design for any structure is the responsibility of the Building Designer per ANSI/TPI 1 Sec.2. For more information see: This job's general notes page; ITW-BCG: www.itwbcg.com; TPI: www.tpinst.org; WTCA: www.sbcindustry.com; ICC: www.iccsafe.org

TC LL	40.0 PSF	REF	R9114- 81500
TC DL	10.0 PSF	DATE	01/22/13
BC DL	5.0 PSF	DRW	HCUSR9114 13022183
BC LL	0.0 PSF	HC-ENG	WHK/WHK
TOT.LD.	55.0 PSF	SEQN-	97192
DUR.FAC.	1.00	FROM	SDY
SPACING	24.0"	JREF-	1UT39114Z03

(120912F--Anderson Truss Co. Patel Residence -- Lot 1 Hills Of Windsor , ** - F20)

Top chord 4x2 SP_#1_12A
Bot chord 4x2 SP_#1_12A
Webs 4x2 SP_#3__12A

Lumber grades designated with "12A" use design values approved 1/5/2012 by ALSC.

Deflection meets L/360 live and L/240 total load. Creep increase factor for dead load is 1.50.

Truss must be installed as shown with top chord up.

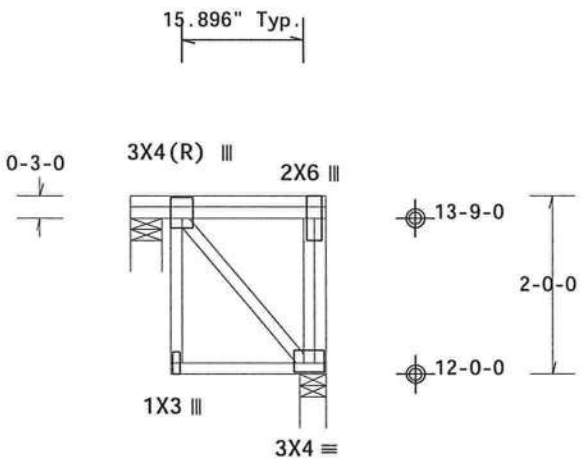

2-1-12 Over 2 Supports

R=99 W=4.243"
R=133 W=3.5"

Design Crit: FBC2010Res/TPI-2007(STD)
FT/RT=12%(0%)/10(0) 10.03.11.0209.19 QTY: 1 FL/-/5/-/-/R/-

PLT TYP. Wave

Scale =.5"/Ft.

WILLIAM H. KRICK LICENSE No. 70861 STATE OF FLORIDA PROFESSIONAL ENGINEER
01/22/2013

ALPINE
ITW Building Components Group Inc.
Haines City, FL 33844
FL COA #0 278

WARNING READ AND FOLLOW ALL NOTES ON THIS SHEET!
IMPORTANT FURNISH THIS DESIGN TO ALL CONTRACTORS INCLUDING INSTALLERS.

Trusses require extreme care in fabricating, handling, shipping, installing and bracing. Refer to and follow the latest edition of BCSI (Building Component Safety Information, by TPI and WTCA) for safety practices prior to performing these functions. Installers shall provide temporary bracing per BCSI. Unless noted otherwise, top chord shall have properly attached structural sheathing and bottom chord shall have a properly attached rigid ceiling. Locations shown for permanent lateral restraint of webs shall have bracing installed per BCSI sections B3, B7 or B10, as applicable.

ITW Building Components Group Inc. (ITWBCG) shall not be responsible for any deviation from this design, any failure to build the truss in conformance with ANSI/TPI 1, or for handling, shipping, installation and bracing of trusses. Apply plates to each face of truss and position as shown above and on the Joint Details, unless noted otherwise. Refer to drawings 160A-Z for standard plate positions. A seal on this drawing or cover page listing this drawing, indicates acceptance of professional engineering responsibility solely for the design shown. The suitability and use of this design for any structure is the responsibility of the Building Designer per ANSI/TPI 1 Sec.2. For more information see: This job's general notes page; ITW-BCG: www.itwbcg.com; TPI: www.tpinst.org; WTCA: www.sbcindustry.com; ICC: www.iccsafe.org

TC LL	40.0 PSF	REF	R9114- 81501
TC DL	10.0 PSF	DATE	01/22/13
BC DL	5.0 PSF	DRW	HCUSR9114 13022184
BC LL	0.0 PSF	HC-ENG	WHK/WHK
TOT.LD.	55.0 PSF	SEQN-	97193
DUR.FAC.	1.00	FROM	SDY
SPACING	24.0"	JREF-	1UT39114Z03

(120912F--Anderson Truss Co. Patel Residence -- Lot 1 Hills Of Windsor , ** - F20A)

Top chord 4x2 SP_#1_12A
Bot chord 4x2 SP_#1_12A
Webs 4x2 SP_#3__12A

Lumber grades designated with "12A" use design values approved 1/5/2012 by ALSC.

Deflection meets L/360 live and L/240 total load. Creep increase factor for dead load is 1.50.

Truss must be installed as shown with top chord up.

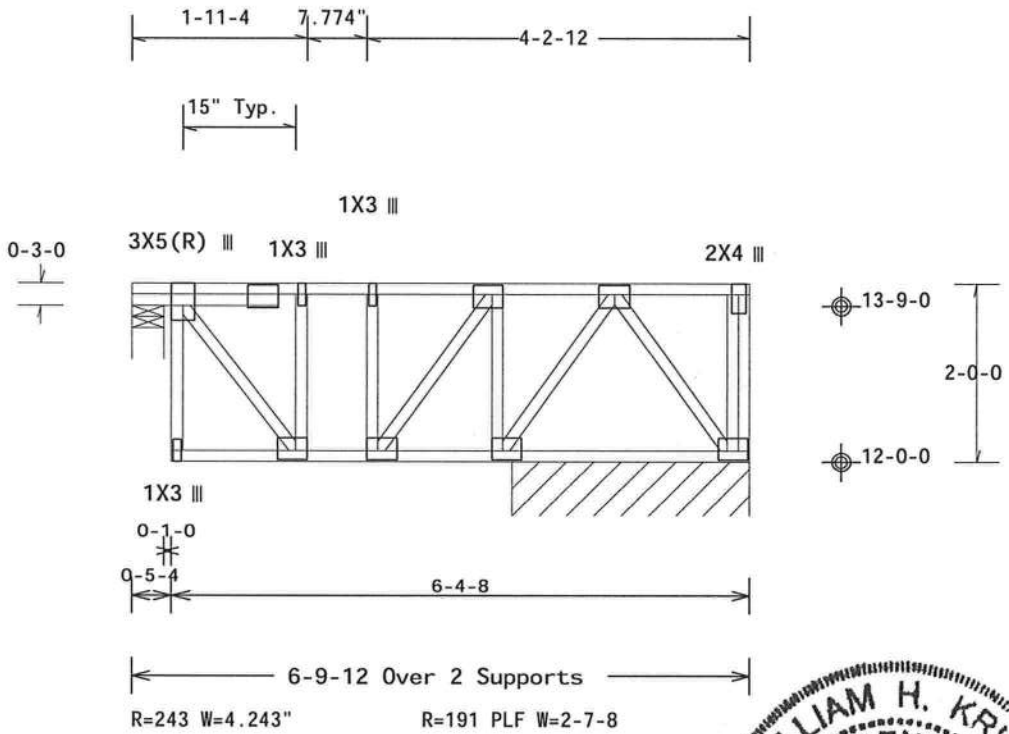

Note: All Plates Are 3X4 Except As Shown.

Design Crit: FBC2010Res/TPI-2007(STD)

PLT TYP. Wave

FT/RT=12%(0%)/10(0) 10.03.PI.0209 19 QTY: 1 FL/-/5/-/-/R/- Scale =.5"/Ft.

WILLIAM H. KRICK LICENSE No 70861 STATE OF FLORIDA PROFESSIONAL ENGINEER

01/22/2013

ALPINE
ITW Building Components Group Inc.
Haines City, FL 33844
FL COA #0 278

WARNING READ AND FOLLOW ALL NOTES ON THIS SHEET!
IMPORTANT FURNISH THIS DESIGN TO ALL CONTRACTORS INCLUDING INSTALLERS.

Trusses require extreme care in fabricating, handling, shipping, installing and bracing. Refer to and follow the latest edition of BCSI (Building Component Safety Information, by TPI and WTCA) for safety practices prior to performing these functions. Installers shall provide temporary bracing per BCSI. Unless noted otherwise, top chord shall have properly attached structural sheathing and bottom chord shall have a properly attached rigid ceiling. Locations shown for permanent lateral restraint of webs shall have bracing installed per BCSI sections B3, B7 or B10, as applicable.

ITW Building Components Group Inc. (ITWBCG) shall not be responsible for any deviation from this design, any failure to build the truss in conformance with ANSI/TPI 1, or for handling, shipping, installation and bracing of trusses. Apply plates to each face of truss and position as shown above and on the Joint Details, unless noted otherwise. Refer to drawings 160A-Z for standard plate positions. A seal on this drawing or cover page listing this drawing, indicates acceptance of professional engineering responsibility solely for the design shown. The suitability and use of this design for any structure is the responsibility of the Building Designer per ANSI/TPI 1 Sec.2. For more information see: This job's general notes page; ITW-BCG: www.itwbcg.com; TPI: www.tpinst.org; WTCA: www.sbcindustry.com; ICC: www.iccsafe.org

TC LL	40.0 PSF	REF	R9114- 81502
TC DL	10.0 PSF	DATE	01/22/13
BC DL	5.0 PSF	DRW	HCUSR9114 13022185
BC LL	0.0 PSF	HC-ENG	WHK/WHK
TOT.LD.	55.0 PSF	SEQN-	97194
DUR.FAC.	1.00	FROM	SDY
SPACING	24.0"	JREF-	1UT39114Z03

(120912F--Anderson Truss Co. Patel Residence -- Lot 1 Hills Of Windsor , ** - F21)

Top chord 4x2 SP_#1_12A
Bot chord 4x2 SP_#1_12A
Webs 4x2 SP_#3__12A

Lumber grades designated with "12A" use design values approved 1/5/2012 by ALSC.

Deflection meets L/360 live and L/240 total load. Creep increase factor for dead load is 1.50.

Truss must be installed as shown with top chord up.

Sheathing is required for any longitudinal(drag) forces. All connections to be designed by the building designer.

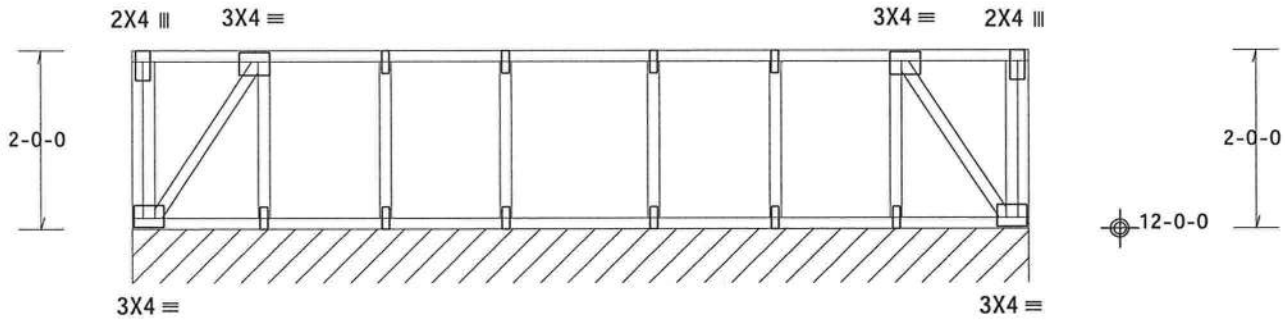

9-10-8 Over Continuous Support

R=110 PLF W=9-10-8

Note: All Plates Are 1X3 Except As Shown.

Design Crit: FBC2010Res/TPI-2007(STD)

PLT TYP. Wave FT/RT=12%(0%)/10(0) 10.03.11.0209.19 QTY:1 FL/-/5/-/-/R/- Scale =.5"/Ft.

WILLIAM H. KRICK LICENSE No 70861 STATE OF FLORIDA PROFESSIONAL ENGINEER

01/22/2013

ALPINE

ITW Building Components Group Inc.

Haines City, FL 33844
FL COA #0 278

WARNING READ AND FOLLOW ALL NOTES ON THIS SHEET!
IMPORTANT FURNISH THIS DESIGN TO ALL CONTRACTORS INCLUDING INSTALLERS.

Trusses require extreme care in fabricating, handling, shipping, installing and bracing. Refer to and follow the latest edition of BCSI (Building Component Safety Information, by TPI and WTCA) for safety practices prior to performing these functions. Installers shall provide temporary bracing per BCSI. Unless noted otherwise, top chord shall have properly attached structural sheathing and bottom chord shall have a properly attached rigid ceiling. Locations shown for permanent lateral restraint of webs shall have bracing installed per BCSI sections B3, B7 or B10, as applicable.

ITW Building Components Group Inc. (ITWBCG) shall not be responsible for any deviation from this design, any failure to build the truss in conformance with ANSI/TPI 1, or for handling, shipping, installation and bracing of trusses. Apply plates to each face of truss and position as shown above and on the Joint Details, unless noted otherwise. Refer to drawings 160A-Z for standard plate positions. A seal on this drawing or cover page listing this drawing, indicates acceptance of professional engineering responsibility solely for the design shown. The suitability and use of this design for any structure is the responsibility of the Building Designer per ANSI/TPI 1 Sec.2. For more information see: This job's general notes page; ITW-BCG: www.itwbcg.com; TPI: www.tpinst.org; WTCA: www.sbcindustry.com; ICC: www.iccsafe.org

TC LL	40.0 PSF	REF	R9114- 81503
TC DL	10.0 PSF	DATE	01/21/13
BC DL	5.0 PSF	DRW	HCUSR9114 13021236
BC LL	0.0 PSF	HC-ENG	JB/AP
TOT.LD.	55.0 PSF	SEQN-	46798
DUR.FAC.	1.00	FROM	SDY
SPACING	24.0"	JREF-	1UT39114Z03

THIS DWG PREPARED FROM COMPUTER INPUT (LOADS & DIMENSIONS) SUBMITTED BY TRUSS MFR.

(120912F--Anderson Truss Co. Patel Residence -- Lot 1 Hills Of Windsor , ** - F22)

Top chord 4x2 SP_#1_12A
Bot chord 4x2 SP_#1_12A
Webs 4x2 SP_#3__12A

Lumber grades designated with "12A" use design values approved 1/5/2012 by ALSC.

Deflection meets L/360 live and L/240 total load. Creep increase factor for dead load is 1.50.

Truss must be installed as shown with top chord up.

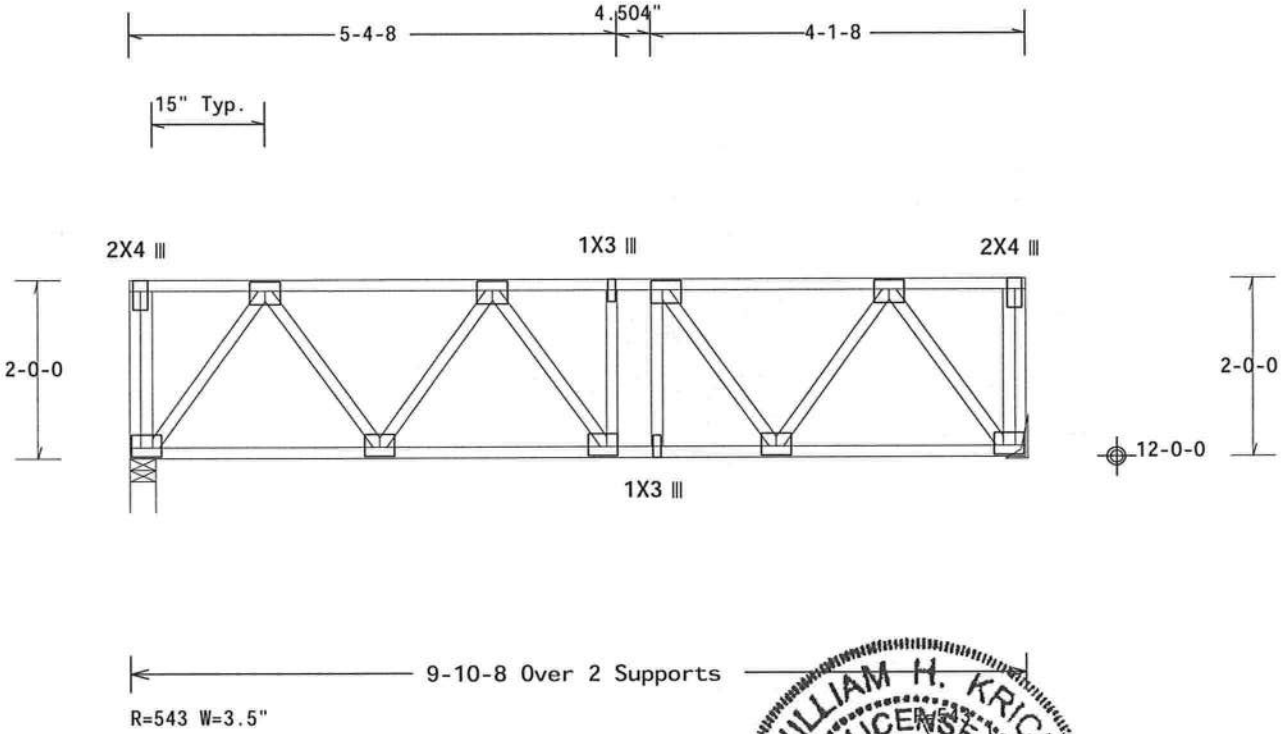

Note: All Plates Are 3X4 Except As Shown.

Design Crit: FBC2010Res/TPI-2007(STD)

PLT TYP. Wave

FT/RT=12%(0%)/10(0)

10.03.11.02.09.19 QTY 1

FL/-/5/-/-/R/-

Scale =.5"/Ft.

WILLIAM H. KRICK LICENSE No. 70861 STATE OF FLORIDA PROFESSIONAL ENGINEER

01/22/2013

ALPINE

ITW Building Components Group Inc.

Haines City, FL 33844
FL COA #0 278

WARNING READ AND FOLLOW ALL NOTES ON THIS SHEET!
IMPORTANT FURNISH THIS DESIGN TO ALL CONTRACTORS INCLUDING INSTALLERS.

Trusses require extreme care in fabricating, handling, shipping, installing and bracing. Refer to and follow the latest edition of BCSI (Building Component Safety Information, by TPI and WTCA) for safety practices prior to performing these functions. Installers shall provide temporary bracing per BCSI. Unless noted otherwise, top chord shall have properly attached structural sheathing and bottom chord shall have a properly attached rigid ceiling. Locations shown for permanent lateral restraint of webs shall have bracing installed per BCSI sections B3, B7 or B10, as applicable.

ITW Building Components Group Inc. (ITWBCG) shall not be responsible for any deviation from this design, any failure to build the truss in conformance with ANSI/TPI 1, or for handling, shipping, installation & bracing of trusses. Apply plates to each face of truss and position as shown above and on the Joint Details, unless noted otherwise. Refer to drawings 160A-Z for standard plate positions. A seal on this drawing or cover page listing this drawing, indicates acceptance of professional engineering responsibility solely for the design shown. The suitability and use of this design for any structure is the responsibility of the Building Designer per ANSI/TPI 1 Sec.2. For more information see: This job's general notes page; ITW-BCG: www.itwbcg.com; TPI: www.tpinst.org; WTCA: www.sbcindustry.com; ICC: www.iccsafe.org

TC LL	40.0 PSF	REF	R9114- 81504
TC DL	10.0 PSF	DATE	01/22/13
BC DL	5.0 PSF	DRW	HCUSR9114 13022186
BC LL	0.0 PSF	HC-ENG	WHK/WHK
TOT.LD.	55.0 PSF	SEQN-	97196
DUR.FAC.	1.00	FROM	SDY
SPACING	24.0"	JREF-	1UT39114Z03

(120912F--Anderson Truss Co. Patel Residence -- Lot 1 Hills Of Windsor , ** - F23)

Top chord 4x2 SP_#1_12A
Bot chord 4x2 SP_#1_12A
Webs 4x2 SP_#3__12A

Lumber grades designated with "12A" use design values approved 1/5/2012 by ALSC.

Deflection meets L/360 live and L/240 total load. Creep increase factor for dead load is 1.50.

Truss must be installed as shown with top chord up.

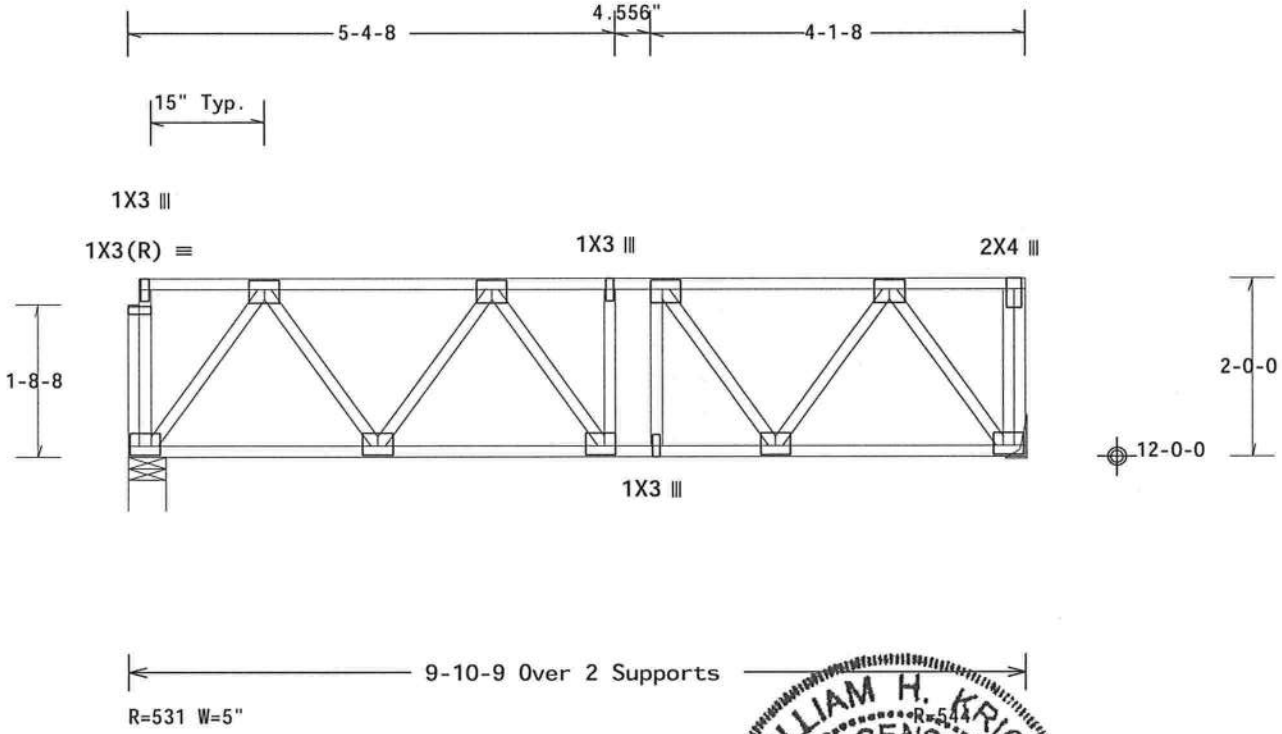

Note: All Plates Are 3X4 Except As Shown.

Design Crit: FBC2010Res/TPI-2007(STD)

PLT TYP. Wave FT/RT=12%(0%)/10(0) 10.03.11.0209.19 OTL-5 FL/-/5/-/-/R/- Scale =.5"/Ft.

ALPINE
ITW Building Components Group Inc.
Haines City, FL 33844
FL COA #0 278

WARNING READ AND FOLLOW ALL NOTES ON THIS SHEET!
IMPORTANT FURNISH THIS DESIGN TO ALL CONTRACTORS INCLUDING INSTALLERS.

Trusses require extreme care in fabricating, handling, shipping, installing and bracing. Refer to and follow the latest edition of BCSI (Building Component Safety Information, by TPI and WTCA) for safety practices prior to performing these functions. Installers shall provide temporary bracing per BCSI. Unless noted otherwise, top chord shall have properly attached structural sheathing and bottom chord shall have a properly attached rigid ceiling. Locations shown for permanent lateral restraint of webs shall have bracing installed per BCSI sections B3, B7 or B10, as applicable.

ITW Building Components Group Inc. (ITWBCG) shall not be responsible for any deviation from this design, any failure to build the truss in conformance with ANSI/TPI 1, or for handling, shipping, installation and bracing of trusses. Apply plates to each face of truss and position as shown above and on the Joint Details, unless noted otherwise. Refer to drawings 160A-Z for standard plate positions. A seal on this drawing or cover page listing this drawing, indicates acceptance of professional engineering responsibility solely for the design shown. The suitability and use of this design for any structure is the responsibility of the Building Designer per ANSI/TPI 1 Sec.2. For more information see: This job's general notes page; ITW-BCG: www.itwbcg.com; TPI: www.tpinst.org; WTCA: www.sbcindustry.com; ICC: www.iccsafe.org

WILLIAM H. KRICK LICENSE No. 70861 STATE OF FLORIDA PROFESSIONAL ENGINEER
01/22/2013

TC LL	40.0 PSF	REF	R9114- 81505
TC DL	10.0 PSF	DATE	01/22/13
BC DL	5.0 PSF	DRW	HCUSR9114 13022187
BC LL	0.0 PSF	HC-ENG	WHK/WHK
TOT.LD.	55.0 PSF	SEQN-	97197
DUR.FAC.	1.00	FROM	SDY
SPACING	24.0"	JREF-	1UT39114Z03

(120912F--Anderson Truss Co. Patel Residence -- Lot 1 Hills Of Windsor , ** - F26)

Top chord 4x2 SP_#1_12A
Bot chord 4x2 SP_#1_12A
Webs 4x2 SP_#3__12A

Lumber grades designated with "12A" use design values approved 1/5/2012 by ALSC.

+ 2x6 continuous strongback. See detail STRBRIBR0211 for bracing and bridging recommendations.

Deflection meets L/360 live and L/240 total load. Creep increase factor for dead load is 1.50.

Truss must be installed as shown with top chord up.

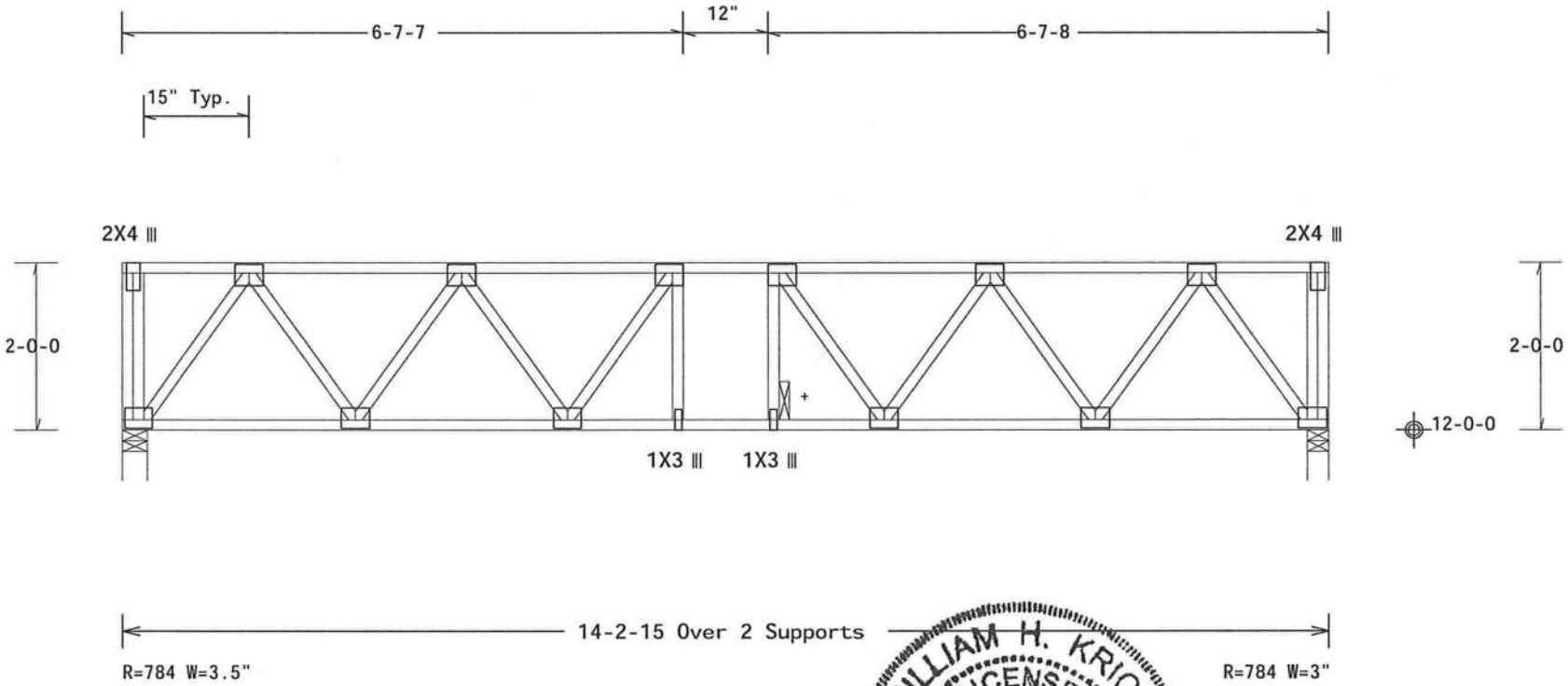

Note: All Plates Are 3X4 Except As Shown.

Design Crit: FBC2010Res/TPI-2007(STD)

PLT TYP. Wave

FT/RT=12%(0%)/10(0) 10.03.11.0209.19 QTY:8 FL/-/5/-/-/R/- Scale =.5"/Ft.

WILLIAM H. KRICK LICENSE No. 70861 STATE OF FLORIDA PROFESSIONAL ENGINEER

01/22/2013

ALPINE

ITW Building Components Group Inc.

Haines City, FL 33844
FL COA #0 278

WARNING READ AND FOLLOW ALL NOTES ON THIS SHEET!
IMPORTANT FURNISH THIS DESIGN TO ALL CONTRACTORS INCLUDING INSTALLERS.

Trusses require extreme care in fabricating, handling, shipping, installing and bracing. Refer to and follow the latest edition of BCSI (Building Component Safety Information, by TPI and WTCA) for safety practices prior to performing these functions. Installers shall provide temporary bracing per BCSI. Unless noted otherwise, top chord shall have properly attached structural sheathing and bottom chord shall have a properly attached rigid ceiling. Locations shown for permanent lateral restraint of webs shall have bracing installed per BCSI sections B3, B7 or B10, as applicable.

ITW Building Components Group Inc. (ITWBCG) shall not be responsible for any deviation from this design, any failure to build the truss in conformance with ANSI/TPI 1, or for handling, shipping, installation and bracing of trusses. Apply plates to each face of truss and position as shown above and on the Joint Details, unless noted otherwise. Refer to drawings 160A-Z for standard plate positions. A seal on this drawing or cover page listing this drawing, indicates acceptance of professional engineering responsibility solely for the design shown. The suitability and use of this design for any structure is the responsibility of the Building Designer per ANSI/TPI 1 Sec.2. For more information see: This job's general notes page; ITW-BCG: www.itwbcg.com; TPI: www.tpinst.org; WTCA: www.sbcindustry.com; ICC: www.iccsafe.org

TC LL	40.0 PSF	REF	R9114- 81506
TC DL	10.0 PSF	DATE	01/22/13
BC DL	5.0 PSF	DRW	HCUSR9114 13022188
BC LL	0.0 PSF	HC-ENG	WHK/WHK
TOT.LD.	55.0 PSF	SEQN-	97198
DUR.FAC.	1.00	FROM	SDY
SPACING	24.0"	JREF-	1UT39114Z03

(120912F--Anderson Truss Co. Patel Residence -- Lot 1 Hills Of Windsor , ** - F27)

Top chord 4x2 SP_#1_12A
Bot chord 4x2 SP_#1_12A
Webs 4x2 SP_#3__12A

Lumber grades designated with "12A" use design values approved 1/5/2012 by ALSC.

Deflection meets L/360 live and L/240 total load. Creep increase factor for dead load is 1.50.

Truss must be installed as shown with top chord up.

Sheathing is required for any longitudinal(drag) forces. All connections to be designed by the building designer.

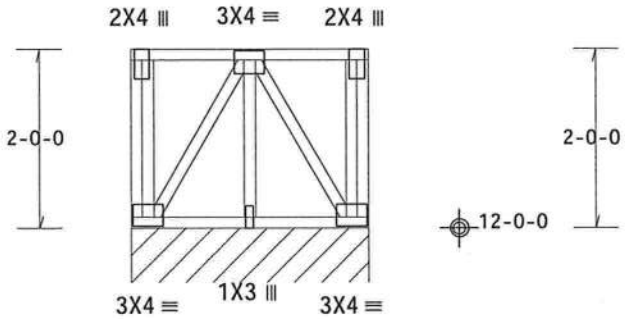

2-7-8 Over Continuous Support

R=110 PLF W=2-7-8

Design Crit: FBC2010Res/TPI-2007(STD)
FT/RT=12%(0%)/10(0) 10.03.PI.0209 19 QTY:1 FL/-/5/-/-/R/-

PLT TYP. Wave

Scale =.5"/Ft.

WILLIAM H. KRICK LICENSE No 70861 STATE OF FLORIDA PROFESSIONAL ENGINEER

01/22/2013

ALPINE
ITW Building Components Group Inc.
Haines City, FL 33844
FL COA #0 278

WARNING READ AND FOLLOW ALL NOTES ON THIS SHEET!
IMPORTANT FURNISH THIS DESIGN TO ALL CONTRACTORS INCLUDING INSTALLERS.

Trusses require extreme care in fabricating, handling, shipping, installing and bracing. Refer to and follow the latest edition of BCSI (Building Component Safety Information, by TPI and WTCA) for safety practices prior to performing these functions. Installers shall provide temporary bracing per BCSI. Unless noted otherwise, top chord shall have properly attached structural sheathing and bottom chord shall have a properly attached rigid ceiling. Locations shown for permanent lateral restraint of webs shall have bracing installed per BCSI sections B3, B7 or B10, as applicable.

ITW Building Components Group Inc. (ITWBCG) shall not be responsible for any deviation from this design, any failure to build the truss in conformance with ANSI/TPI 1, or for handling, shipping, installation and bracing of trusses. Apply plates to each face of truss and position as shown above and on the Joint Details, unless noted otherwise. Refer to drawings 160A-Z for standard plate positions. A seal on this drawing or cover page listing this drawing, indicates acceptance of professional engineering responsibility solely for the design shown. The suitability and use of this design for any structure is the responsibility of the Building Designer per ANSI/TPI 1 Sec.2. For more information see: This job's general notes page; ITW-BCG: www.itwbcg.com; TPI: www.tpinst.org; WTCA: www.sbcindustry.com; ICC: www.iccsafe.org

TC LL	40.0 PSF	REF	R9114- 81507
TC DL	10.0 PSF	DATE	01/21/13
BC DL	5.0 PSF	DRW	HCUSR9114 13021238
BC LL	0.0 PSF	HC-ENG	JB/AP
TOT.LD.	55.0 PSF	SEQN-	46802
DUR.FAC.	1.00	FROM	SDY
SPACING	24.0"	JREF-	1UT39114Z03

(120912F--Anderson Truss Co. Patel Residence -- Lot 1 Hills Of Windsor , ** - F28)

Top chord 4x2 SP_#1_12A
Bot chord 4x2 SP_#1_12A
Webs 4x2 SP_#3__12A

Lumber grades designated with "12A" use design values approved 1/5/2012 by ALSC.

+ 2x6 continuous strongback. See detail STRBRIBR0211 for bracing and bridging recommendations.

Deflection meets L/360 live and L/240 total load. Creep increase factor for dead load is 1.50.

Truss must be installed as shown with top chord up.

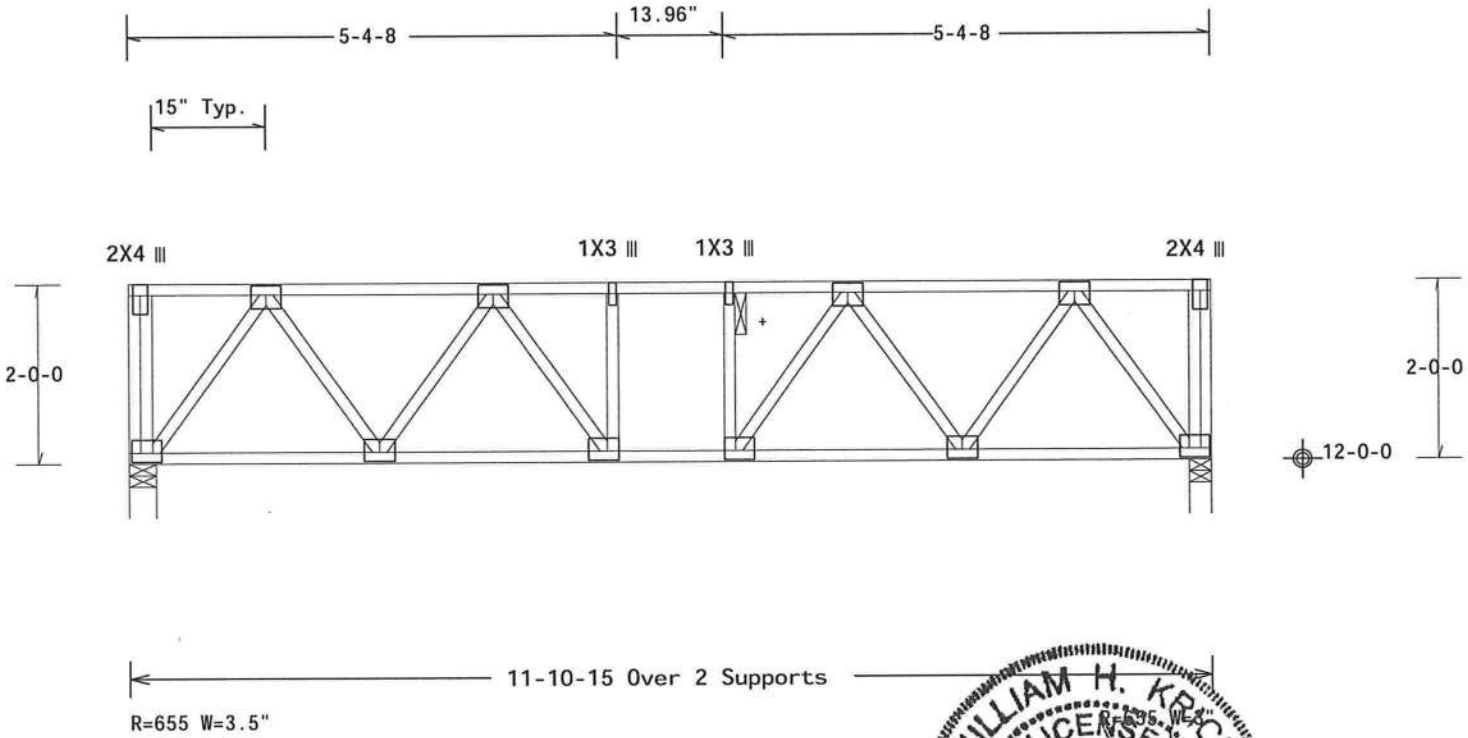

Note: All Plates Are 3X4 Except As Shown.

Design Crit: FBC2010Res/TPI-2007(STD)

PLT TYP. Wave

FT/RT=12%(0%)/10(0)

10.03.11.0209.19 QTY 3

FL/-/5/-/-/R/-

Scale =.5"/Ft.

WILLIAM H. KRUCK LICENSE No. 70861 STATE OF FLORIDA PROFESSIONAL ENGINEER

01/22/2013

ALPINE
ITW Building Components Group Inc.
Haines City, FL 33844
FL COA #0 278

WARNING READ AND FOLLOW ALL NOTES ON THIS SHEET!
IMPORTANT FURNISH THIS DESIGN TO ALL CONTRACTORS INCLUDING INSTALLERS.

Trusses require extreme care in fabricating, handling, shipping, installing and bracing. Refer to and follow the latest edition of BCSI (Building Component Safety Information, by TPI and WTCA) for safety practices prior to performing these functions. Installers shall provide temporary bracing per BCSI. Unless noted otherwise, top chord shall have properly attached structural sheathing and bottom chord shall have a properly attached rigid ceiling. Locations shown for permanent lateral restraint of webs shall have bracing installed per BCSI sections B3, B7 or B10, as applicable.

ITW Building Components Group Inc. (ITWBCG) shall not be responsible for any deviation from this design, any failure to build the truss in conformance with ANSI/TPI 1, or for handling, shipping, installation and bracing of trusses. Apply plates to each face of truss and position as shown above and on the Joint Details, unless noted otherwise. Refer to drawings 160A-Z for standard plate positions. A seal on this drawing or cover page listing this drawing, indicates acceptance of professional engineering responsibility solely for the design shown. The suitability and use of this design for any structure is the responsibility of the Building Designer per ANSI/TPI 1 Sec.2. For more information see: This job's general notes page; ITW-BCG: www.itwbcg.com; TPI: www.tpinst.org; WTCA: www.sbcindustry.com; ICC: www.iccsafe.org

TC LL	40.0 PSF	REF	R9114- 81508
TC DL	10.0 PSF	DATE	01/22/13
BC DL	5.0 PSF	DRW	HCUSR9114 13022189
BC LL	0.0 PSF	HC-ENG	WHK/WHK
TOT.LD.	55.0 PSF	SEQN-	97200
DUR.FAC.	1.00	FROM	SDY
SPACING	24.0"	JREF-	1UT39114Z03

(120912F--Anderson Truss Co. Patel Residence -- Lot 1 Hills Of Windsor , ** - F29)

Top chord 4x2 SP_#1_12A
Bot chord 4x2 SP_#1_12A
Webs 4x2 SP_#3__12A

Lumber grades designated with "12A" use design values approved 1/5/2012 by ALSC.

See detail STRBRIBR0211 for bracing and bridging recommendations.

Deflection meets L/360 live and L/240 total load. Creep increase factor for dead load is 1.50.

Truss must be installed as shown with top chord up.

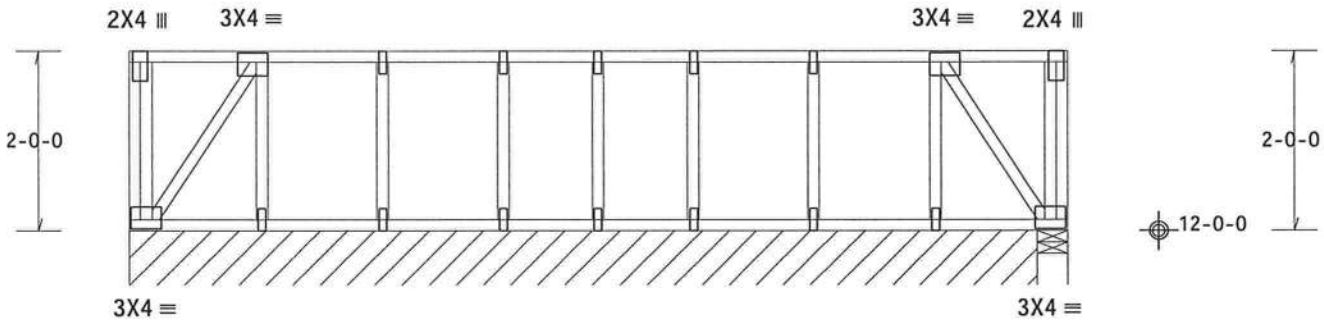

10-4-0 Over 2 Supports

R=104 PLF W=10-0-0

R=93 W=4"

Note: All Plates Are 1X3 Except As Shown.

Design Crit: FBC2010Res/TPI-2007(STD)

PLT TYP. Wave

FT/RT=12%(0%)/10(0) 10.03.11.0909.19 QTY: 1 FL/-/5/-/-/R/- Scale =.5"/Ft.

WILLIAM H. KRICK LICENSE No. 70861 STATE OF FLORIDA PROFESSIONAL ENGINEER

01/22/2013

ALPINE

ITW Building Components Group Inc.

Haines City, FL 33844
FL COA #0 278

WARNING READ AND FOLLOW ALL NOTES ON THIS SHEET!
IMPORTANT FURNISH THIS DESIGN TO ALL CONTRACTORS INCLUDING INSTALLERS.

Trusses require extreme care in fabricating, handling, shipping, installing and bracing. Refer to and follow the latest edition of BCSI (Building Component Safety Information, by TPI and WTCA) for safety practices prior to performing these functions. Installers shall provide temporary bracing per BCSI. Unless noted otherwise, top chord shall have properly attached structural sheathing and bottom chord shall have a properly attached rigid ceiling. Locations shown for permanent lateral restraint of webs shall have bracing installed per BCSI sections B3, B7 or B10, as applicable.

ITW Building Components Group Inc. (ITWBCG) shall not be responsible for any deviation from this design, any failure to build the truss in conformance with ANSI/TPI 1, or for handling, shipping, installation and bracing of trusses. Apply plates to each face of truss and position as shown above and on the Joint Details, unless noted otherwise. Refer to drawings 160A-Z for standard plate positions. A seal on this drawing or cover page listing this drawing, indicates acceptance of professional engineering responsibility solely for the design shown. The suitability and use of this design for any structure is the responsibility of the Building Designer per ANSI/TPI 1 Sec.2. For more information see: This job's general notes page; ITW-BCG: www.itwbcg.com; TPI: www.tpinst.org; WTCA: www.sbcindustry.com; ICC: www.iccsafe.org

TC LL	40.0 PSF	REF	R9114- 81509
TC DL	10.0 PSF	DATE	01/21/13
BC DL	5.0 PSF	DRW	HCUSR9114 13021237
BC LL	0.0 PSF	HC-ENG	JB/AP
TOT.LD.	55.0 PSF	SEQN-	46804
DUR.FAC.	1.00	FROM	SDY
SPACING	24.0"	JREF-	1UT39114Z03

(120912F--Anderson Truss Co. Patel Residence -- Lot 1 Hills Of Windsor , ** - F30)

Top chord 4x2 SP_#1_12A
Bot chord 4x2 SP_#1_12A
Webs 4x2 SP_#3__12A

Lumber grades designated with "12A" use design values approved 1/5/2012 by ALSC.

Deflection meets L/360 live and L/240 total load. Creep increase factor for dead load is 1.50.

Truss must be installed as shown with top chord up.

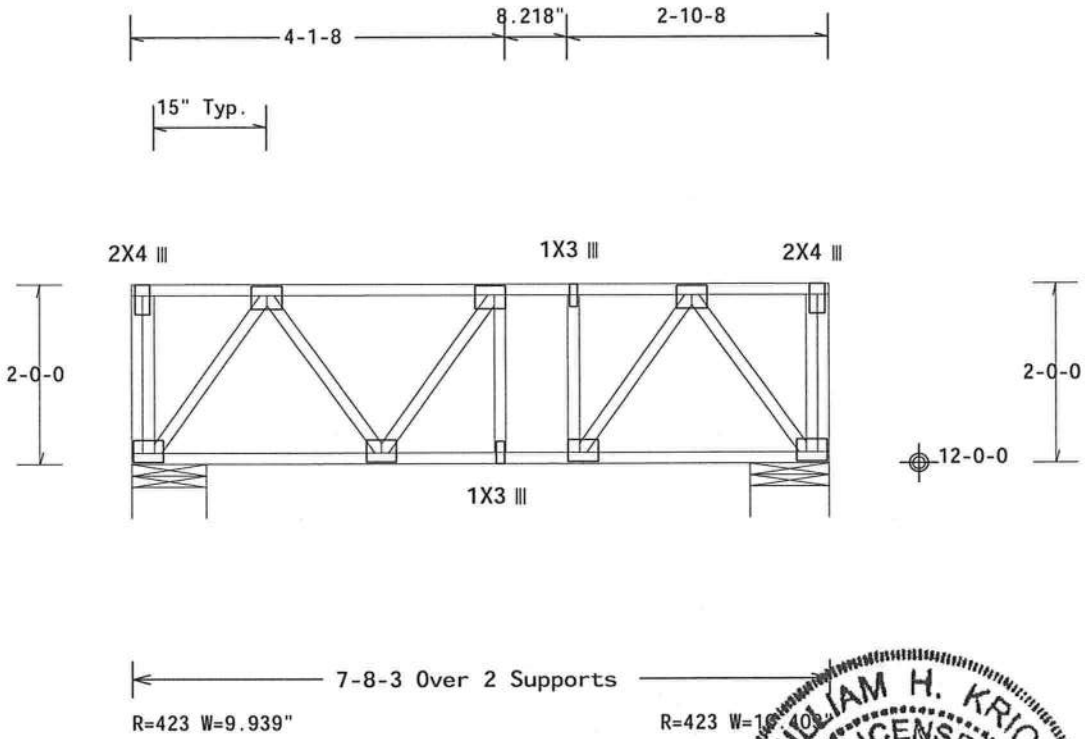

Note: All Plates Are 3X4 Except As Shown.

Design Crit: FBC2010Res/TPI-2007(STD)

PLT TYP. Wave

FT/RT=12%(0%)/10(0)

10.03.11.0209.19 QTY 1

FL/-/5/-/-/R/-

Scale =.5"/Ft.

WILLIAM H. KRICK LICENSE No. 70861 STATE OF FLORIDA PROFESSIONAL ENGINEER

01/22/2013

ALPINE
ITW Building Components Group Inc.
Haines City, FL 33844
FL COA #0 278

WARNING READ AND FOLLOW ALL NOTES ON THIS SHEET!
IMPORTANT FURNISH THIS DESIGN TO ALL CONTRACTORS INCLUDING INSTALLERS.

Trusses require extreme care in fabricating, handling, shipping, installing and bracing. Refer to and follow the latest edition of BCSI (Building Component Safety Information, by TPI and WTCA) for general practices prior to performing these functions. Installers shall provide temporary bracing per BCSI. Unless noted otherwise, top chord shall have properly attached structural sheathing and bottom chord shall have a properly attached rigid ceiling. Locations shown for permanent lateral restraint of webs shall have bracing installed per BCSI sections B3, B7 or B10, as applicable.

ITW Building Components Group Inc. (ITWBCG) shall not be responsible for any deviation from this design, any failure to build the truss in conformance with ANSI/TPI 1, or for handling, shipping, installation bracing of trusses. Apply plates to each face of truss and position as shown above and on the Joint Details, unless noted otherwise. Refer to drawings 160A-Z for standard plate positions. A seal on this drawing or cover page listing this drawing, indicates acceptance of professional engineering responsibility solely for the design shown. The suitability and use of this design for any structure is the responsibility of the Building Designer per ANSI/TPI 1 Sec.2. For more information see: This job's general notes page; ITW-BCG: www.itwbcg.com; TPI: www.tpinst.org; WTCA: www.sbcindustry.com; ICC: www.iccsafe.org

TC LL	40.0 PSF	REF	R9114- 81510
TC DL	10.0 PSF	DATE	01/22/13
BC DL	5.0 PSF	DRW	HCUSR9114 13022190
BC LL	0.0 PSF	HC-ENG	WHK/WHK
TOT.LD.	55.0 PSF	SEQN-	97202
DUR.FAC.	1.00	FROM	SDY
SPACING	24.0"	JREF-	1UT39114Z03

(120912F--Anderson Truss Co. Patel Residence -- Lot 1 Hills Of Windsor , ** - F31)

Top chord 4x2 SP_#1_12A
Bot chord 4x2 SP_#1_12A
Webs 4x2 SP_#3__12A

Lumber grades designated with "12A" use design values approved 1/5/2012 by ALSC.

+ 2x6 continuous strongback. See detail STRBRIBR0211 for bracing and bridging recommendations.

Deflection meets L/360 live and L/240 total load. Creep increase factor for dead load is 1.50.

Truss must be installed as shown with top chord up.

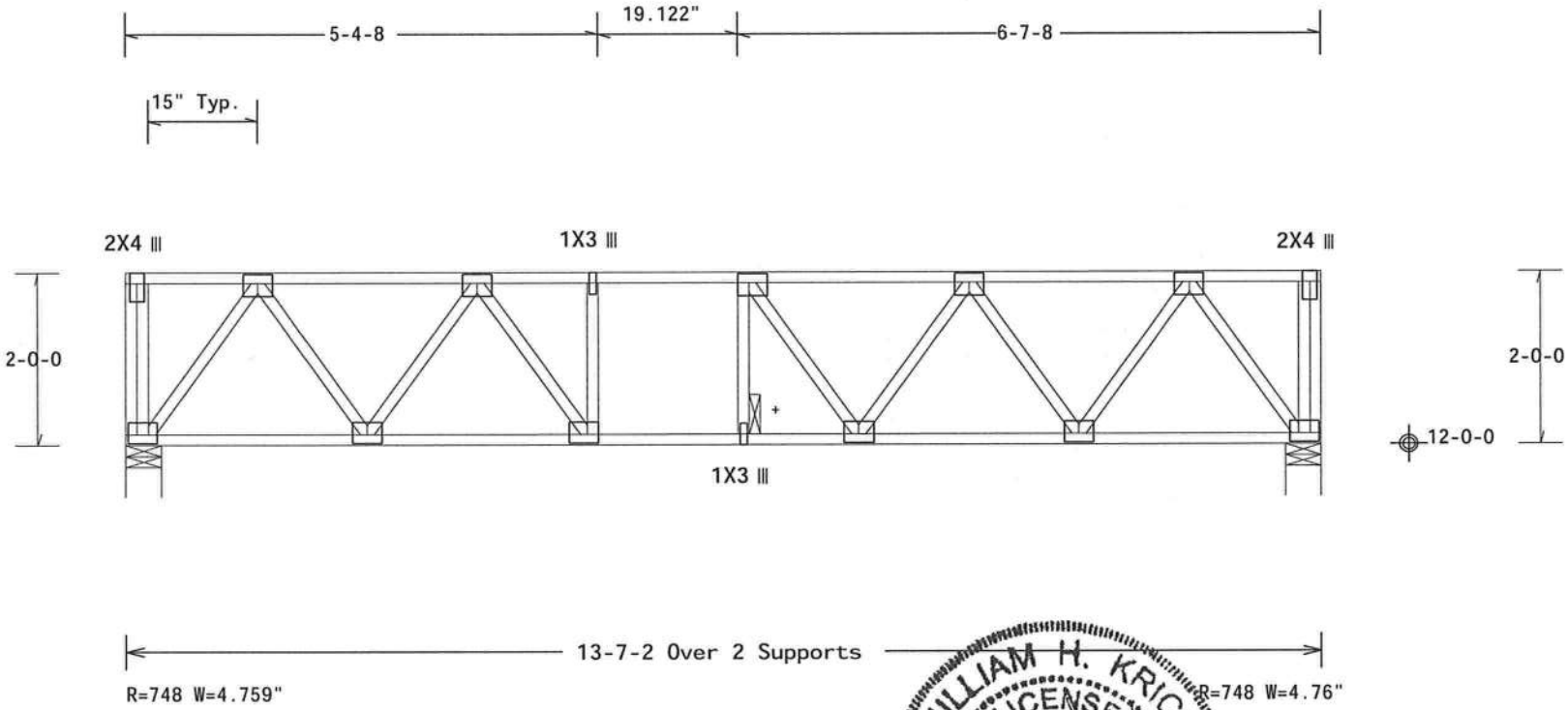

Note: All Plates Are 3X4 Except As Shown.

Design Crit: FBC2010Res/TPI-2007(STD)

PLT TYP. Wave

FT/RT=12%(0%)/10(0) 10.03.11.0209.19 QTY:1 FL/-/5/-/-/R/- Scale =.5"/Ft.

ALPINE
ITW Building Components Group Inc.
Haines City, FL 33844
FL COA #0 278

WARNING READ AND FOLLOW ALL NOTES ON THIS SHEET!
IMPORTANT FURNISH THIS DESIGN TO ALL CONTRACTORS INCLUDING INSTALLERS.

Trusses require extreme care in fabricating, handling, shipping, installing and bracing. Refer to and follow the latest edition of BCSI (Building Component Safety Information, by TPI and WTCA) for standard practices prior to performing these functions. Installers shall provide temporary bracing per BCSI. Unless noted otherwise, top chord shall have properly attached structural sheathing and bottom chord shall have a properly attached rigid ceiling. Locations shown for permanent lateral restraint of webs shall have bracing installed per BCSI sections B3, B7 or B10, as applicable.

ITW Building Components Group Inc. (ITWBCG) shall not be responsible for any deviation from this design, any failure to build the truss in conformance with ANSI/TPI 1, or for handling, shipping, installation and bracing of trusses. Apply plates to each face of truss and position as shown above and on the Joint Details, unless noted otherwise. Refer to drawings 160A-Z for standard plate positions. A seal on this drawing or cover page listing this drawing, indicates acceptance of professional engineering responsibility solely for the design shown. The suitability and use of this design for any structure is the responsibility of the Building Designer per ANSI/TPI 1 Sec.2. For more information see: This job's general notes page; ITW-BCG: www.itwbcg.com; TPI: www.tpinst.org; WTCA: www.sbcindustry.com; ICC: www.iccsafe.org

WILLIAM H. KRICK
LICENSE
No. 70861
STATE OF FLORIDA
PROFESSIONAL ENGINEER
01/22/2013

TC LL	40.0 PSF	REF	R9114- 81511
TC DL	10.0 PSF	DATE	01/22/13
BC DL	5.0 PSF	DRW	HCUSR9114 13022191
BC LL	0.0 PSF	HC-ENG	WHK/WHK
TOT.LD.	55.0 PSF	SEQN-	97203
DUR.FAC.	1.00	FROM	SDY
SPACING	24.0"	JREF-	1UT39114Z03

(120912F--Anderson Truss Co. Patel Residence -- Lot 1 Hills Of Windsor , ** - F32)

Top chord 4x2 SP_#1_12A
Bot chord 4x2 SP_#1_12A
Webs 4x2 SP_#3__12A

Lumber grades designated with "12A" use design values approved 1/5/2012 by ALSC.

+ 2x6 continuous strongback. See detail STRBRIBR0211 for bracing and bridging recommendations.

Deflection meets L/360 live and L/240 total load. Creep increase factor for dead load is 1.50.

Truss must be installed as shown with top chord up.

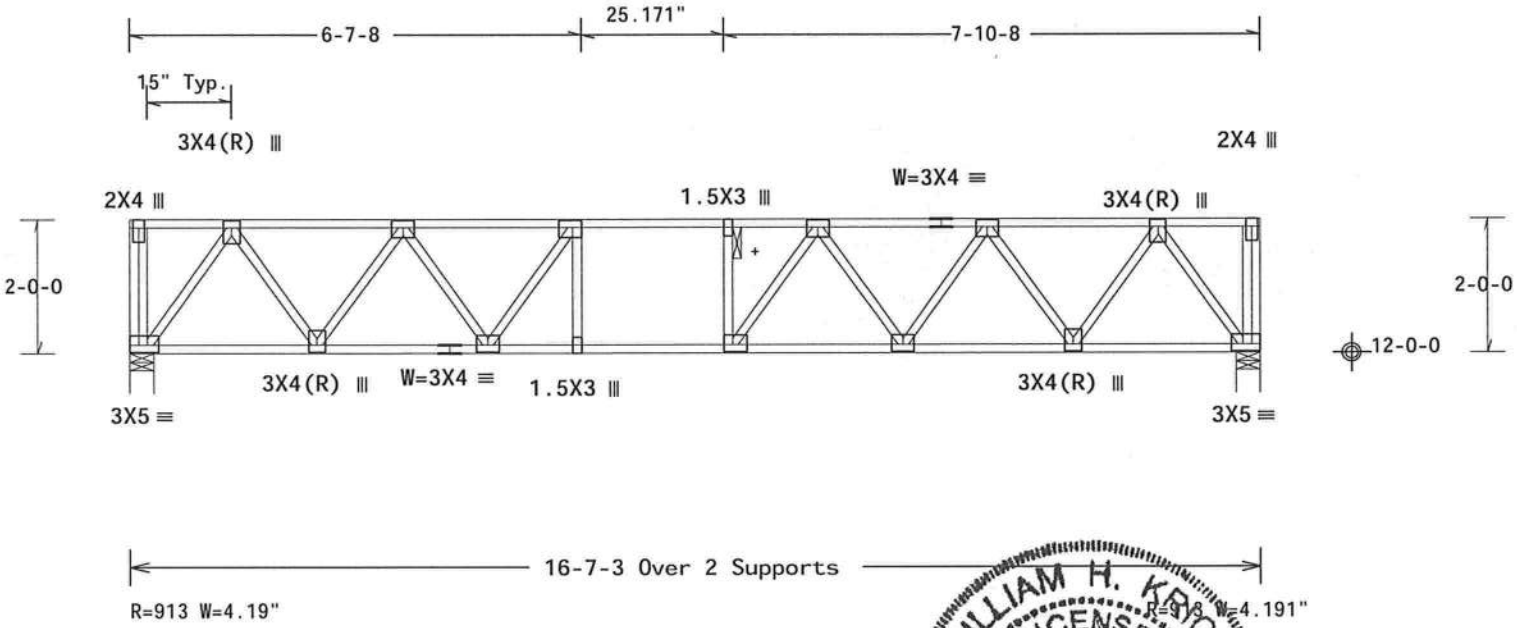

Note: All Plates Are 3X4 Except As Shown.

Design Crit: FBC2010Res/TPI-2007(STD)

PLT TYP. Wave

FT/RT=12%(0%)/10(0) 10.03.11.0209.19 QTY 1 FL/-/5/-/-/R/- Scale =.375"/Ft.

WILLIAM H. KRICK LICENSE No. 70861 STATE OF FLORIDA PROFESSIONAL ENGINEER

01/22/2013

ALPINE
ITW Building Components Group Inc.
Haines City, FL 33844
FL COA #0 278

WARNING READ AND FOLLOW ALL NOTES ON THIS SHEET!
IMPORTANT FURNISH THIS DESIGN TO ALL CONTRACTORS INCLUDING INSTALLERS.

Trusses require extreme care in fabricating, handling, shipping, installing and bracing. Refer to and follow the latest edition of BCSI (Building Component Safety Information, by TPI and WTCA) for safety practices prior to performing these functions. Installers shall provide temporary bracing per BCSI. Unless noted otherwise, top chord shall have properly attached structural sheathing and bottom chord shall have a properly attached rigid ceiling. Locations shown for permanent lateral restraint of webs shall have bracing installed per BCSI sections B3, B7 or B10, as applicable.

ITW Building Components Group Inc. (ITWBCG) shall not be responsible for any deviation from this design, any failure to build the truss in conformance with ANSI/TPI 1, or for handling, shipping, installation and bracing of trusses. Apply plates to each face of truss and position as shown above and on the Joint Details, unless noted otherwise. Refer to drawings 160A-Z for standard plate positions. A seal on this drawing or cover page listing this drawing, indicates acceptance of professional engineering responsibility solely for the design shown. The suitability and use of this design for any structure is the responsibility of the Building Designer per ANSI/TPI 1 Sec.2. For more information see: This job's general notes page; ITW-BCG: www.itwbcg.com; TPI: www.tpinst.org; WTCA: www.sbcindustry.com; ICC: www.iccsafe.org

TC LL	40.0 PSF	REF	R9114- 81512
TC DL	10.0 PSF	DATE	01/22/13
BC DL	5.0 PSF	DRW	HCUSR9114 13022192
BC LL	0.0 PSF	HC-ENG	WHK/WHK
TOT.LD.	55.0 PSF	SEQN-	97204
DUR.FAC.	1.00	FROM	SDY
SPACING	24.0"	JREF-	1UT39114Z03

(120912F--Anderson Truss Co. Patel Residence -- Lot 1 Hills Of Windsor , ** - F33)

Top chord 4x2 SP_#1_12A
Bot chord 4x2 SP_#1_12A
Webs 4x2 SP_#3__12A

Lumber grades designated with "12A" use design values approved 1/5/2012 by ALSC.

See detail STRBRIBR0211 for bracing and bridging recommendations.

Deflection meets L/360 live and L/240 total load. Creep increase factor for dead load is 1.50.

Truss must be installed as shown with top chord up.

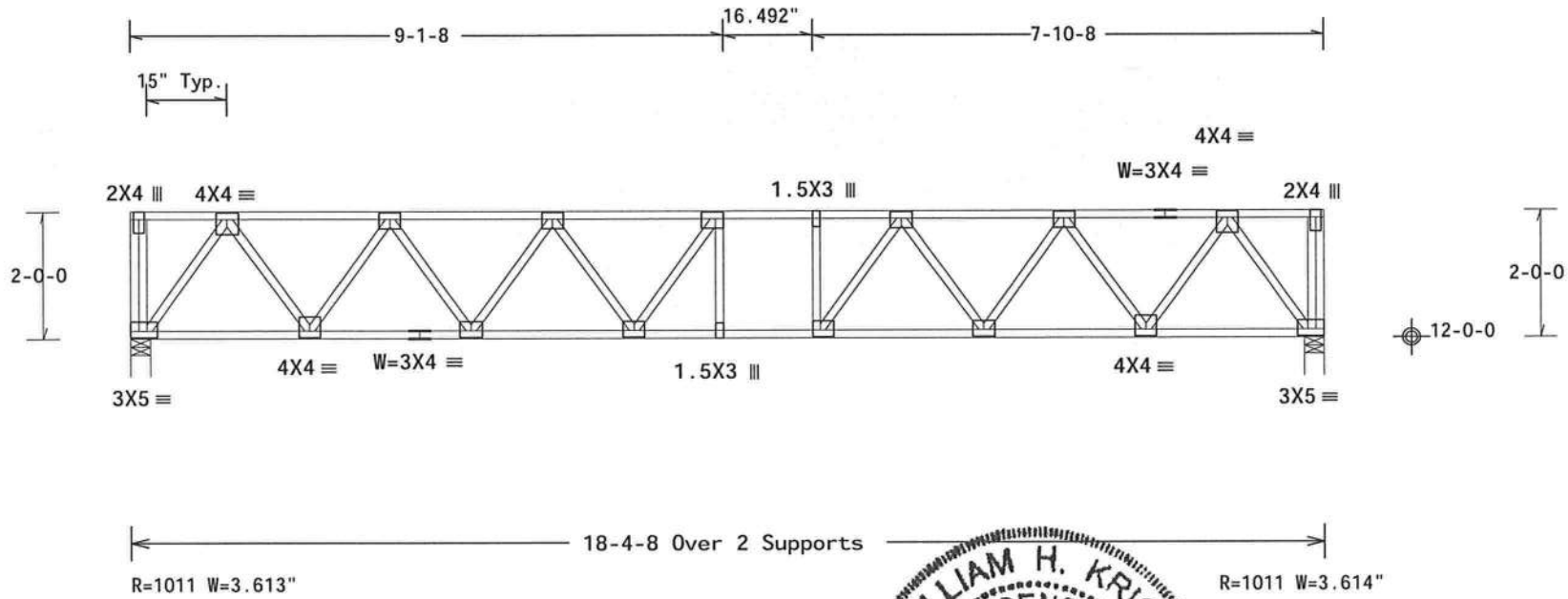

Note: All Plates Are 3X4 Except As Shown.

Design Crit: FBC2010Res/TPI-2007(STD)

PLT TYP. Wave FT/RT=12%(0%)/10(0) 10.03.Pl.0209 19 QTY: 1 FL/-/5/-/-/R/- Scale =.375"/Ft.

WILLIAM H. KRICK LICENSE No 70861 STATE OF FLORIDA PROFESSIONAL ENGINEER

01/22/2013

ALPINE
ITW Building Components Group Inc.
Haines City, FL 33844
FL COA #0 278

WARNING READ AND FOLLOW ALL NOTES ON THIS SHEET!
IMPORTANT FURNISH THIS DESIGN TO ALL CONTRACTORS INCLUDING INSTALLERS.

Trusses require extreme care in fabricating, handling, shipping, installing and bracing. Refer to and follow the latest edition of BCSI (Building Component Safety Information, by TPI and WTCA) for safety practices prior to performing these functions. Installers shall provide temporary bracing per BCSI. Unless noted otherwise, top chord shall have properly attached structural sheathing and bottom chord shall have a properly attached rigid ceiling. Locations shown for permanent lateral restraint of webs shall have bracing installed per BCSI sections B3, B7 or B10, as applicable.

ITW Building Components Group Inc. (ITWBCG) shall not be responsible for any deviation from this design, any failure to build the truss in conformance with ANSI/TPI 1, or for handling, shipping, installation and bracing of trusses. Apply plates to each face of truss and position as shown above and on the Joint Details, unless noted otherwise. Refer to drawings 160A-Z for standard plate positions. A seal on this drawing or cover page listing this drawing, indicates acceptance of professional engineering responsibility solely for the design shown. The suitability and use of this design for any structure is the responsibility of the Building Designer per ANSI/TPI 1 Sec.2. For more information see: This job's general notes page; ITW-BCG: www.itwbcg.com; TPI: www.tpinst.org; WTCA: www.sbcindustry.com; ICC: www.iccsafe.org

TC LL	40.0 PSF	REF	R9114- 81513
TC DL	10.0 PSF	DATE	01/22/13
BC DL	5.0 PSF	DRW	HCUSR9114 13022193
BC LL	0.0 PSF	HC-ENG	WHK/WHK
TOT.LD.	55.0 PSF	SEQN-	97205
DUR.FAC.	1.00	FROM	SDY
SPACING	24.0"	JREF-	1UT39114Z03

(120912F--Anderson Truss Co. Patel Residence -- Lot 1 Hills Of Windsor , ** - F34)

Top chord 4x2 SP_#1_12A
Bot chord 4x2 SP_#1_12A
Webs 4x2 SP_#3__12A

Lumber grades designated with "12A" use design values approved 1/5/2012 by ALSC.

+ 2x6 continuous strongback. See detail STRBRIBR0211 for bracing and bridging recommendations.

Deflection meets L/360 live and L/240 total load. Creep increase factor for dead load is 1.50.

Truss must be installed as shown with top chord up.

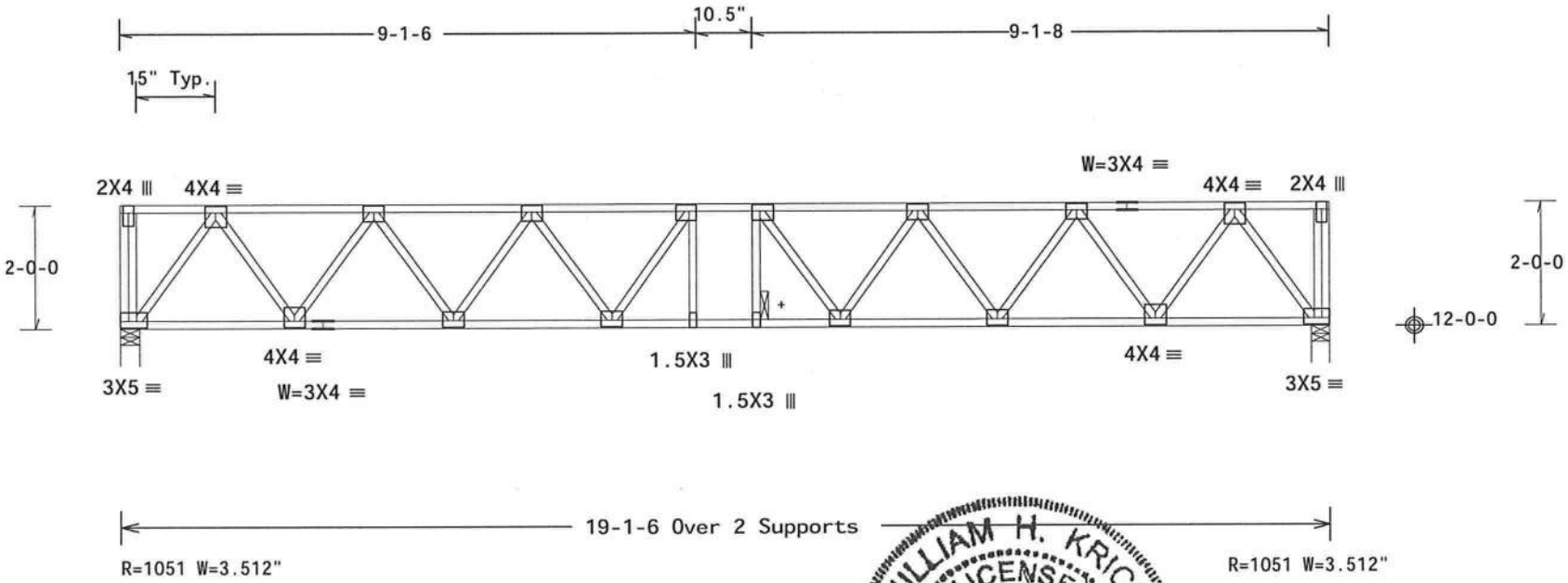

Note: All Plates Are 3X4 Except As Shown.

Design Crit: FBC2010Res/TPI-2007(STD)

PLT TYP. Wave

FT/RT=12%(0%)/10(0)

10.03.11.0209.19 QTY 1

FL/-/5/-/-/R/-

Scale =.375"/Ft.

WILLIAM H. KRICK
LICENSE
No. 70861
STATE OF FLORIDA
PROFESSIONAL ENGINEER
01/22/2013

ALPINE
ITW Building Components Group Inc.
Haines City, FL 33844
FL COA #0 278

WARNING READ AND FOLLOW ALL NOTES ON THIS SHEET!
IMPORTANT FURNISH THIS DESIGN TO ALL CONTRACTORS INCLUDING INSTALLERS.

Trusses require extreme care in fabricating, handling, shipping, installing and bracing. Refer to and follow the latest edition of BCSI (Building Component Safety Information, by TPI and WTCA) for safety practices prior to performing these functions. Installers shall provide temporary bracing per BCSI. Unless noted otherwise, top chord shall have properly attached structural sheathing and bottom chord shall have a properly attached rigid ceiling. Locations shown for permanent lateral restraint of webs shall have bracing installed per BCSI sections B3, B7 or B10, as applicable.

ITW Building Components Group Inc. (ITWBCG) shall not be responsible for any deviation from this design, any failure to build the truss in conformance with ANSI/TPI 1, or for handling, shipping, installation and bracing of trusses. Apply plates to each face of truss and position as shown above and on the Joint Details, unless noted otherwise. Refer to drawings 160A-Z for standard plate positions. A seal on this drawing or cover page listing this drawing, indicates acceptance of professional engineering responsibility solely for the design shown. The suitability and use of this design for any structure is the responsibility of the Building Designer per ANSI/TPI 1 Sec.2. For more information see: This job's general notes page; ITW-BCG: www.itwbcg.com; TPI: www.tpinst.org; WTCA: www.sbcindustry.com; ICC: www.iccsafe.org

TC LL	40.0 PSF	REF	R9114- 81514
TC DL	10.0 PSF	DATE	01/22/13
BC DL	5.0 PSF	DRW	HCUSR9114 13022194
BC LL	0.0 PSF	HC-ENG	WHK/WHK
TOT.LD.	55.0 PSF	SEQN-	97206
DUR.FAC.	1.00	FROM	SDY
SPACING	24.0"	JREF-	1UT39114Z03

(120912F--Anderson Truss Co. Patel Residence -- Lot 1 Hills Of Windsor , ** - F35)

Top chord 4x2 SP_#1_12A
Bot chord 4x2 SP_#1_12A
Webs 4x2 SP_#3__12A

Lumber grades designated with "12A" use design values approved 1/5/2012 by ALSC.

Truss must be installed as shown with top chord up.

+ 2x6 continuous strongback. See detail STRBRIBR0211 for bracing and bridging recommendations.

Trusses to be spaced at 16.0" OC maximum.

Deflection meets L/360 live and L/240 total load. Creep increase factor for dead load is 1.50.

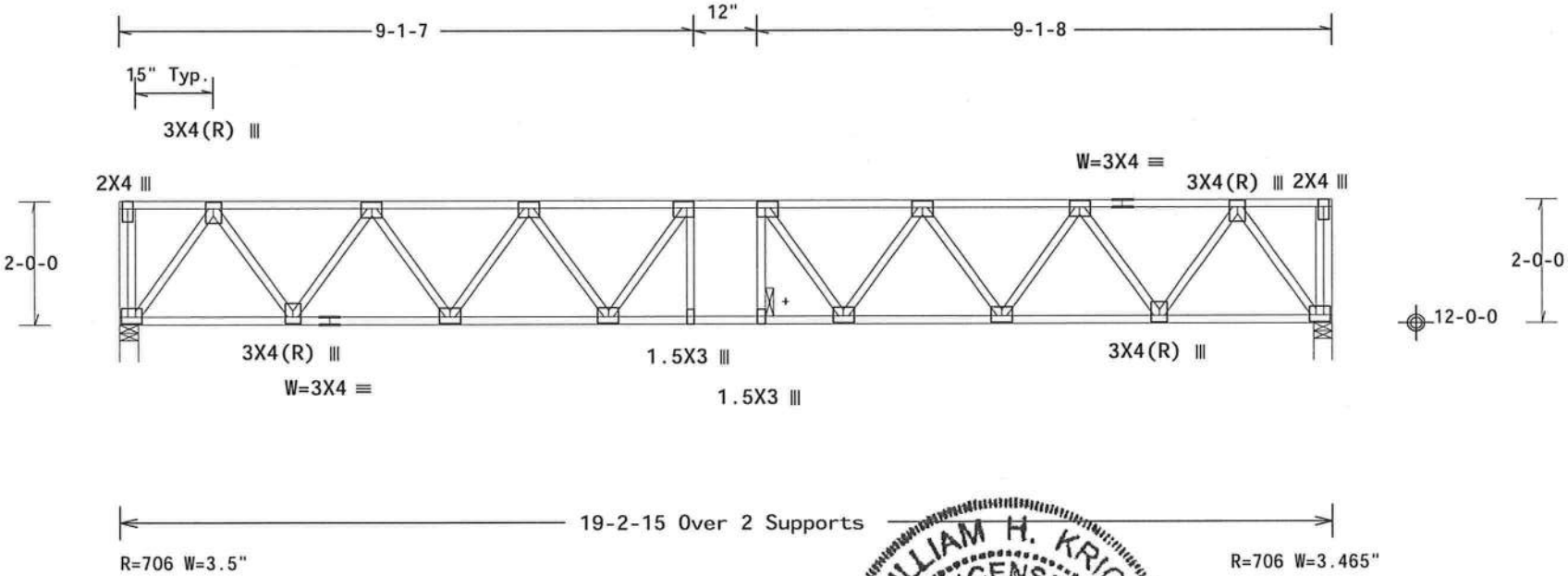

Note: All Plates Are 3X4 Except As Shown.

Design Crit: FBC2010Res/TPI-2007(STD)

PLT TYP. Wave FT/RT=12%(0%)/10(0) 10.03.11.0209.19 QTY:4 FL/-/5/-/-/R/- Scale =.375"/Ft.

ALPINE
ITW Building Components Group Inc.
Haines City, FL 33844
FL COA #0 278

WARNING READ AND FOLLOW ALL NOTES ON THIS SHEET!
IMPORTANT FURNISH THIS DESIGN TO ALL CONTRACTORS INCLUDING INSTALLERS.

Trusses require extreme care in fabricating, handling, shipping, installing and bracing. Refer to and follow the latest edition of BCSI (Building Component Safety Information, by TPI and WTCA) for safety practices prior to performing these functions. Installers shall provide temporary bracing per BCSI. Unless noted otherwise, top chord shall have properly attached structural sheathing and bottom chord shall have a properly attached rigid ceiling. Locations shown for permanent lateral restraint of webs shall have bracing installed per BCSI sections B3, B7 or B10, as applicable.

ITW Building Components Group Inc. (ITWBCG) shall not be responsible for any deviation from this design, any failure to build the truss in conformance with ANSI/TPI 1, or for handling, shipping, installation and bracing of trusses. Apply plates to each face of truss and position as shown above and on the Joint Details, unless noted otherwise. Refer to drawings 160A-Z for standard plate positions. A seal on this drawing or cover page listing this drawing, indicates acceptance of professional engineering responsibility solely for the design shown. The suitability and use of this design for any structure is the responsibility of the Building Designer per ANSI/TPI 1 Sec.2. For more information see: This job's general notes page; ITW-BCG: www.itwbcg.com; TPI: www.tpinst.org; WTCA: www.sbcindustry.com; ICC: www.iccsafe.org

WILLIAM H. KRICK LICENSE No. 70861 STATE OF FLORIDA PROFESSIONAL ENGINEER
01/22/2013

TC LL	40.0 PSF	REF	R9114- 81515
TC DL	10.0 PSF	DATE	01/22/13
BC DL	5.0 PSF	DRW	HCUSR9114 13022195
BC LL	0.0 PSF	HC-ENG	WHK/WHK
TOT.LD.	55.0 PSF	SEQN-	97207
DUR.FAC.	1.00	FROM	SDY
SPACING	16.0"	JREF-	1UT39114Z03

(120912F--Anderson Truss Co. Patel Residence -- Lot 1 Hills Of Windsor , ** - F36)

Top chord 4x2 SP_#1_12A
Bot chord 4x2 SP_#1_12A
Webs 4x2 SP_#3__12A

Lumber grades designated with "12A" use design values approved 1/5/2012 by ALSC.

Truss must be installed as shown with top chord up.

+ 2x6 continuous strongback. See detail STRBRIBR0211 for bracing and bridging recommendations.

Trusses to be spaced at 16.0" OC maximum.

Deflection meets L/360 live and L/240 total load. Creep increase factor for dead load is 1.50.

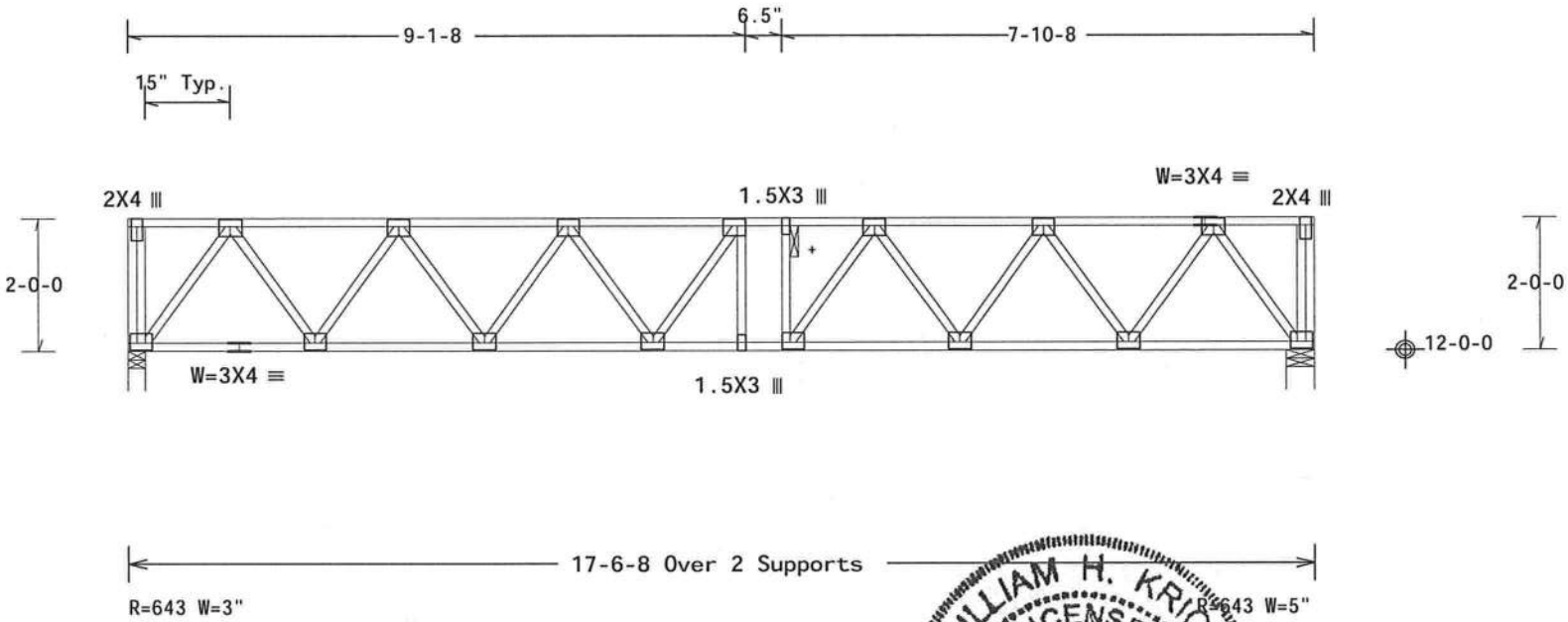

Note: All Plates Are 3X4 Except As Shown.

Design Crit: FBC2010Res/TPI-2007(STD)

PLT TYP. Wave FT/RT=12%(0%)/10(0) 10.03.11.0209.19 QTY:4 FL/-/5/-/-/R/- Scale =.375"/Ft.

WILLIAM H. KRICK LICENSE No. 70861 STATE OF FLORIDA PROFESSIONAL ENGINEER

01/22/2013

ALPINE
ITW Building Components Group Inc.
Haines City, FL 33844
FL COA #0 278

WARNING READ AND FOLLOW ALL NOTES ON THIS SHEET!
IMPORTANT FURNISH THIS DESIGN TO ALL CONTRACTORS INCLUDING INSTALLERS.

Trusses require extreme care in fabricating, handling, shipping, installing and bracing. Refer to and follow the latest edition of BCSI (Building Component Safety Information, by TPI and WTCA) for general practices prior to performing these functions. Installers shall provide temporary bracing per BCSI. Unless noted otherwise, top chord shall have properly attached structural sheathing and bottom chord shall have a properly attached rigid ceiling. Locations shown for permanent lateral restraint of webs shall have bracing installed per BCSI sections B3, B7 or B10, as applicable.

ITW Building Components Group Inc. (ITWBCG) shall not be responsible for any deviation from this design, any failure to build the truss in conformance with ANSI/TPI 1, or for handling, shipping, installation and bracing of trusses. Apply plates to each face of truss and position as shown above and on the Joint Details, unless noted otherwise. Refer to drawings 160A-Z for standard plate positions. A seal on this drawing or cover page listing this drawing, indicates acceptance of professional engineering responsibility solely for the design shown. The suitability and use of this design for any structure is the responsibility of the Building Designer per ANSI/TPI 1 Sec.2. For more information see: This job's general notes page; ITW-BCG: www.itwbcg.com; TPI: www.tpinst.org; WTCA: www.sbcindustry.com; ICC: www.iccsafe.org

TC LL	40.0 PSF	REF	R9114- 81516
TC DL	10.0 PSF	DATE	01/22/13
BC DL	5.0 PSF	DRW	HCUSR9114 13022196
BC LL	0.0 PSF	HC-ENG	WHK/WHK
TOT.LD.	55.0 PSF	SEQN-	97208
DUR.FAC.	1.00	FROM	SDY
SPACING	16.0"	JREF-	1UT39114Z03

(120912F--Anderson Truss Co. Patel Residence -- Lot 1 Hills Of Windsor , ** - F37)

Top chord 4x2 SP_#1_12A
Bot chord 4x2 SP_#1_12A
Webs 4x2 SP_#3__12A

Lumber grades designated with "12A" use design values approved 1/5/2012 by ALSC.

+ 2x6 continuous strongback. See detail STRBRIBRO211 for bracing and bridging recommendations.

Deflection meets L/360 live and L/240 total load. Creep increase factor for dead load is 1.50.

Truss must be installed as shown with top chord up.

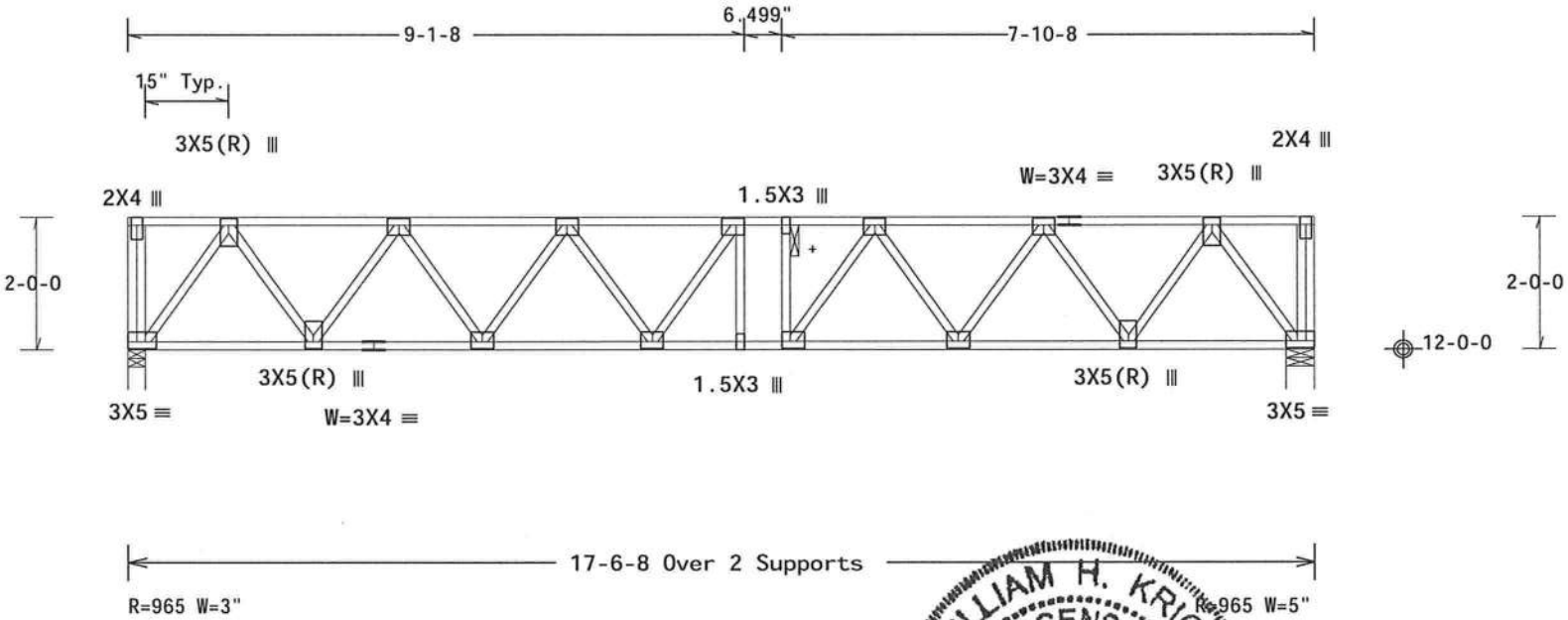

Note: All Plates Are 3X4 Except As Shown.

Design Crit: FBC2010Res/TPI-2007(STD)

PLT TYP. Wave FT/RT=12%(0%)/10(0) 10.03.11.0809.19 QTY=5 FL/-/5/-/-/R/- Scale =.375"/Ft.

WILLIAM H. KRICK LICENSE No. 70861 STATE OF FLORIDA PROFESSIONAL ENGINEER

01/22/2013

ALPINE
ITW Building Components Group Inc.
Haines City, FL 33844
FL COA #0 278

WARNING READ AND FOLLOW ALL NOTES ON THIS SHEET!
IMPORTANT FURNISH THIS DESIGN TO ALL CONTRACTORS INCLUDING INSTALLERS.

Trusses require extreme care in fabricating, handling, shipping, installing and bracing. Refer to and follow the latest edition of BCSI (Building Component Safety Information, by TPI and WTCA) for safety practices prior to performing these functions. Installers shall provide temporary bracing per BCSI. Unless noted otherwise, top chord shall have properly attached structural sheathing and bottom chord shall have a properly attached rigid ceiling. Locations shown for permanent lateral restraint of webs shall have bracing installed per BCSI sections B3, B7 or B10, as applicable.

ITW Building Components Group Inc. (ITWBCG) shall not be responsible for any deviation from this design, any failure to build the truss in conformance with ANSI/TPI 1, or for handling, shipping, installation and bracing of trusses. Apply plates to each face of truss and position as shown above and on the Joint Details, unless noted otherwise. Refer to drawings 160A-Z for standard plate positions. A seal on this drawing or cover page listing this drawing, indicates acceptance of professional engineering responsibility solely for the design shown. The suitability and use of this design for any structure is the responsibility of the Building Designer per ANSI/TPI 1 Sec.2. For more information see: This job's general notes page; ITW-BCG: www.itwbcg.com; TPI: www.tpinst.org; WTCA: www.sbcindustry.com; ICC: www.iccsafe.org

TC LL	40.0 PSF	REF	R9114- 81517
TC DL	10.0 PSF	DATE	01/22/13
BC DL	5.0 PSF	DRW	HCUSR9114 13022197
BC LL	0.0 PSF	HC-ENG	WHK/WHK
TOT.LD.	55.0 PSF	SEQN-	97209
DUR.FAC.	1.00	FROM	SDY
SPACING	24.0"	JREF-	1UT39114Z03

(120912F--Anderson Truss Co. Patel Residence -- Lot 1 Hills Of Windsor , ** - F38)

Top chord 4x2 SP_#1_12A
Bot chord 4x2 SP_#1_12A
Webs 4x2 SP_#3__12A

Lumber grades designated with "12A" use design values approved 1/5/2012 by ALSC.

+ 2x6 continuous strongback. See detail STRBRIBR0211 for bracing and bridging recommendations.

Deflection meets L/360 live and L/240 total load. Creep increase factor for dead load is 1.50.

Truss must be installed as shown with top chord up.

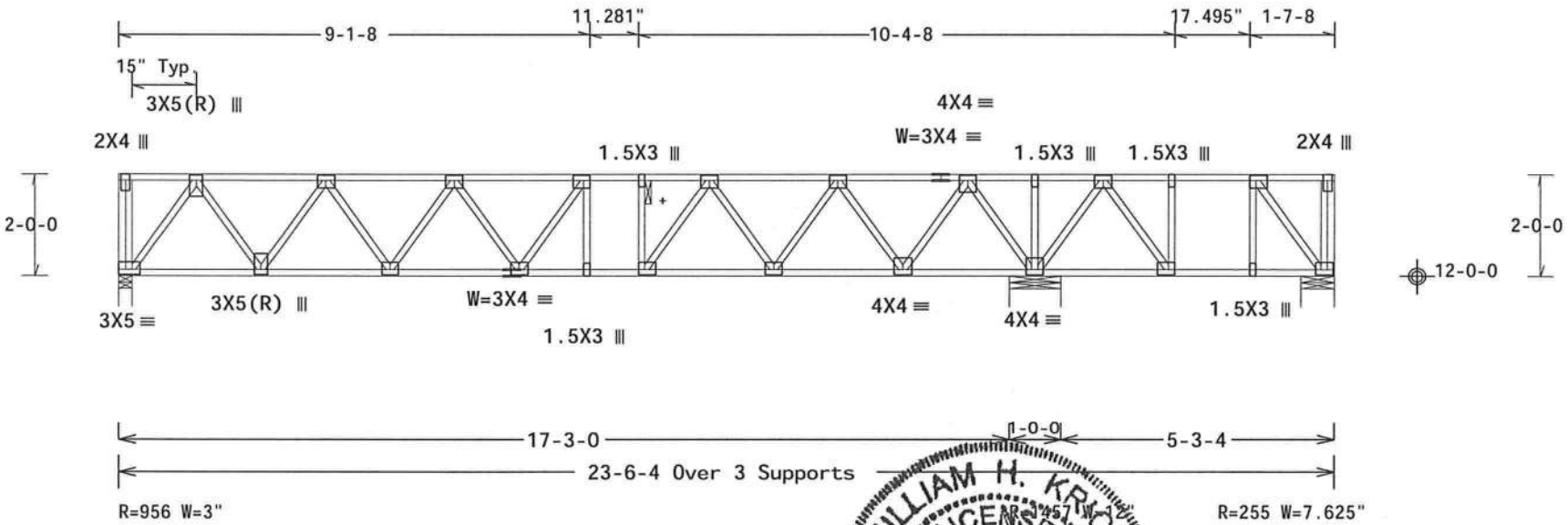

Note: All Plates Are 3X4 Except As Shown.

Design Crit: FBC2010Res/TPI-2007(STD)

PLT TYP. Wave

FT/RT=12%(0%)/10(0)

10.03.11.02.09.19 QTY 3

FL/-/5/-/-/R/-

Scale =.3125"/Ft.

WILLIAM H. KRUCK LICENSE No. 70861 STATE OF FLORIDA PROFESSIONAL ENGINEER

01/22/2013

ALPINE
ITW Building Components Group Inc.
Haines City, FL 33844
FL COA #0 278

WARNING READ AND FOLLOW ALL NOTES ON THIS SHEET!
IMPORTANT FURNISH THIS DESIGN TO ALL CONTRACTORS INCLUDING INSTALLERS.

Trusses require extreme care in fabricating, handling, shipping, installing and bracing. Refer to and follow the latest edition of BCSI (Building Component Safety Information, by TPI and WTCA) for recommended practices prior to performing these functions. Installers shall provide temporary bracing per BCSI. Unless noted otherwise, top chord shall have properly attached structural sheathing and bottom chord shall have a properly attached rigid ceiling. Locations shown for permanent lateral restraint of webs shall have bracing installed per BCSI sections B3, B7 or B10, as applicable.

ITW Building Components Group Inc. (ITWBCG) shall not be responsible for any deviation from this design, any failure to build the truss in conformance with ANSI/TPI 1, or for handling, shipping, installation & bracing of trusses. Apply plates to each face of truss and position as shown above and on the Joint Details, unless noted otherwise. Refer to drawings 160A-Z for standard plate positions. A seal on this drawing or cover page listing this drawing, indicates acceptance of professional engineering responsibility solely for the design shown. The suitability and use of this design for any structure is the responsibility of the Building Designer per ANSI/TPI 1 Sec.2. For more information see: This job's general notes page; ITW-BCG: www.itwbcg.com; TPI: www.tpinst.org; WTCA: www.sbcindustry.com; ICC: www.iccsafe.org

TC LL	40.0 PSF	REF	R9114- 81518
TC DL	10.0 PSF	DATE	01/22/13
BC DL	5.0 PSF	DRW	HCUSR9114 13022198
BC LL	0.0 PSF	HC-ENG	WHK/WHK
TOT.LD.	55.0 PSF	SEQN-	97210
DUR.FAC.	1.00	FROM	SDY
SPACING	24.0"	JREF-	1UT39114Z03

(120912F--Anderson Truss Co. Patel Residence -- Lot 1 Hills Of Windsor , ** - F39)

THIS DWG PREPARED FROM COMPUTER INPUT (LOADS & DIMENSIONS) SUBMITTED BY TRUSS MFR.

Top chord 4x2 SP_#1_12A
Bot chord 4x2 SP_#1_12A
Webs 4x2 SP_#3__12A

Lumber grades designated with "12A" use design values approved 1/5/2012 by ALSC.

Special loads
------(Lumber Dur.Fac.=1.25 / Plate Dur.Fac.=1.25)
TC- From 100 plf at 0.00 to 100 plf at 21.05
BC- From 10 plf at 0.00 to 10 plf at 21.05
TC- 738.00 lb Conc. Load at 4.42
TC- 330.00 lb Conc. Load at 21.05

See detail STRBRIBR0211 for bracing and bridging recommendations.

Deflection meets L/360 live and L/240 total load. Creep increase factor for dead load is 1.50.

Truss must be installed as shown with top chord up.

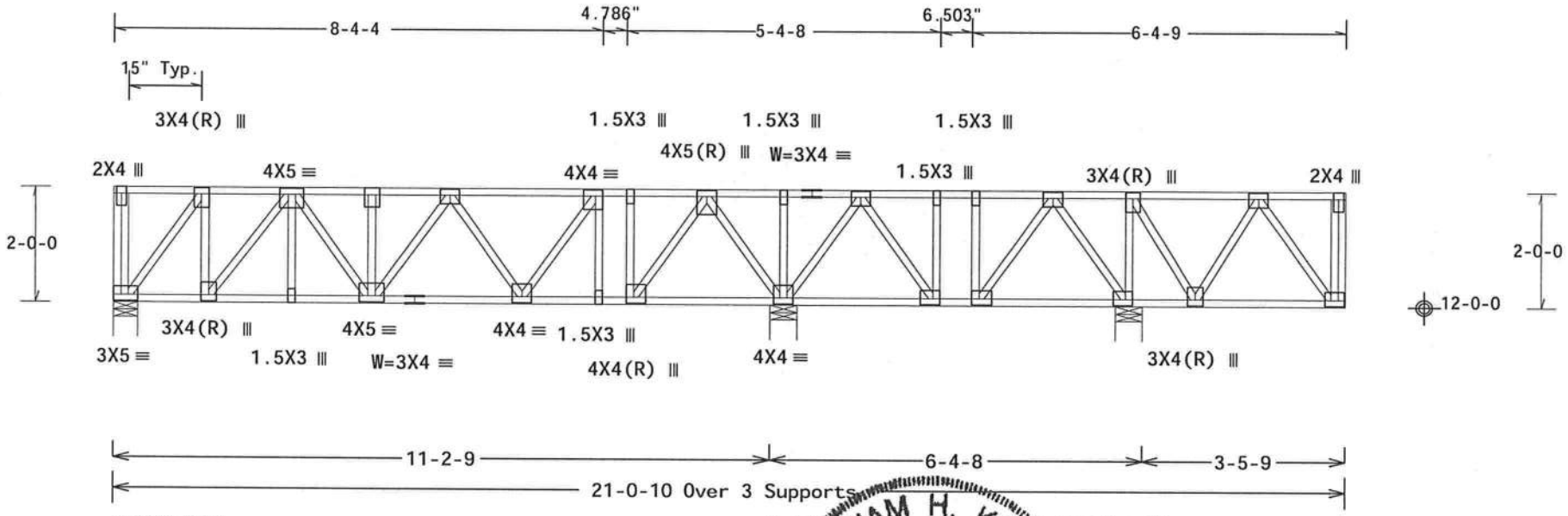

Note: All Plates Are 3X4 Except As Shown.

Design Crit: FBC2010Res/TPI-2007(STD)

PLT TYP. Wave

FT/RT=12%(0%)/10(0) 10.03.11.0209.19 QTY:1 FL/-/5/-/-/R/- Scale =.375"/Ft.

WILLIAM H. KRICK LICENSE No. 70861 STATE OF FLORIDA PROFESSIONAL ENGINEER

01/22/2013

ALPINE
ITW Building Components Group Inc.
Haines City, FL 33844
FL COA #0 278

WARNING READ AND FOLLOW ALL NOTES ON THIS SHEET!
IMPORTANT FURNISH THIS DESIGN TO ALL CONTRACTORS INCLUDING INSTALLERS.

Trusses require extreme care in fabricating, handling, shipping, installing and bracing. Refer to and follow the latest edition of BCSI (Building Component Safety Information, by TPI and WTCA) for safety practices prior to performing these functions. Installers shall provide temporary bracing per BCSI. Unless noted otherwise, top chord shall have properly attached structural sheathing and bottom chord shall have a properly attached rigid ceiling. Locations shown for permanent lateral restraint of webs shall have bracing installed per BCSI sections B3, B7 or B10, as applicable.

ITW Building Components Group Inc. (ITWBCG) shall not be responsible for any deviation from this design, any failure to build the truss in conformance with ANSI/TPI 1, or for handling, shipping, installation and bracing of trusses. Apply plates to each face of truss and position as shown above and on the Joint Details, unless noted otherwise. Refer to drawings 160A-Z for standard plate positions. A seal on this drawing or cover page listing this drawing, indicates acceptance of professional engineering responsibility solely for the design shown. The suitability and use of this design for any structure is the responsibility of the Building Designer per ANSI/TPI 1 Sec.2. For more information see: This job's general notes page; ITW-BCG: www.itwbcg.com; TPI: www.tpinst.org; WTCA: www.sbcindustry.com; ICC: www.iccsafe.org

TC LL	40.0 PSF	REF	R9114- 81519
TC DL	10.0 PSF	DATE	01/22/13
BC DL	5.0 PSF	DRW	HCUSR9114 13022199
BC LL	0.0 PSF	HC-ENG	WHK/WHK
TOT.LD.	55.0 PSF	SEQN-	97211
DUR.FAC.	1.00	FROM	SDY
SPACING	24.0"	JREF-	1UT39114Z03

(120912F--Anderson Truss Co. Patel Residence -- Lot 1 Hills Of Windsor , ** - F40)

THIS DWG PREPARED FROM COMPUTER INPUT (LOADS & DIMENSIONS) SUBMITTED BY TRUSS MFR.

Top chord 4x2 SP_#1_12A
Bot chord 4x2 SP_#1_12A
Webs 4x2 SP_#3__12A

Lumber grades designated with "12A" use design values approved 1/5/2012 by ALSC.

Special loads
------(Lumber Dur.Fac.=1.00 / Plate Dur.Fac.=1.00)
TC- From 100 plf at 0.00 to 100 plf at 21.47
BC- From 10 plf at 0.00 to 10 plf at 21.47
TC- 738.00 lb Conc. Load at 4.42

+ 2x6 continuous strongback. See detail STRBRIBR0211 for bracing and bridging recommendations.

Max JT VERT DEFL: LL: 0.32" DL: 0.25" recommended camber 3/8"

Deflection meets L/360 live and L/240 total load. Creep increase factor for dead load is 1.50.

Truss must be installed as shown with top chord up.

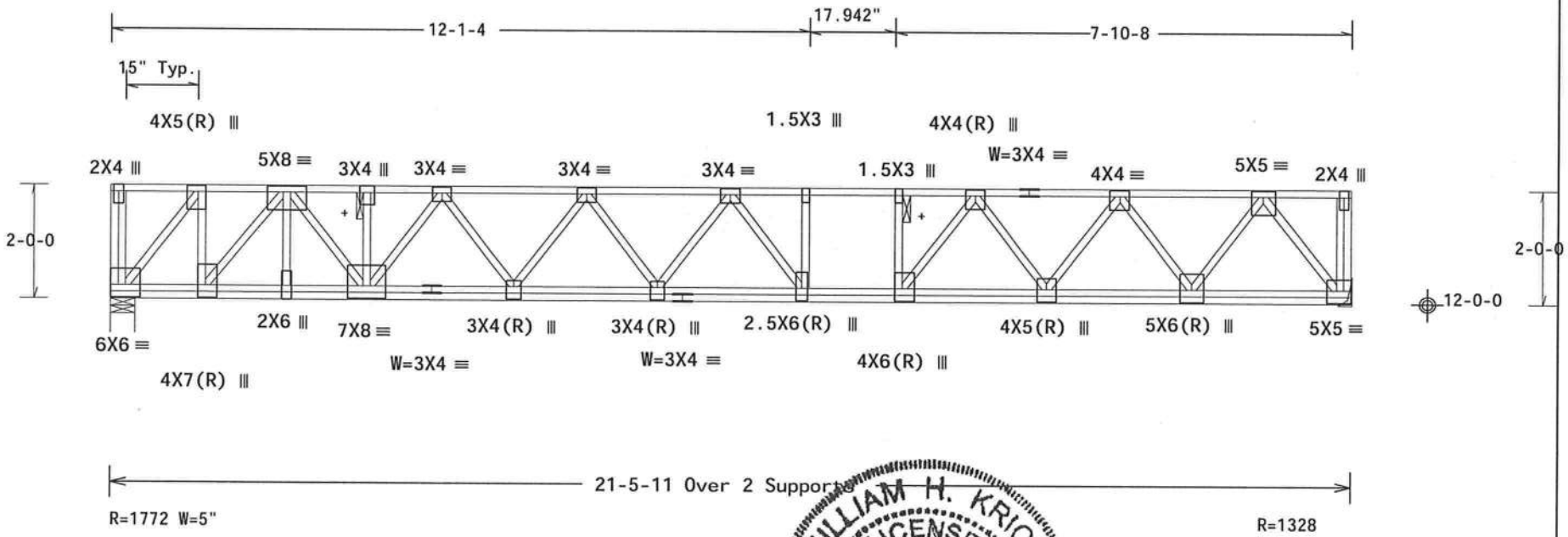

Design Crit: FBC2010Res/TPI-2007(STD)
FT/RT=12%(0%)/10(0)

10.03.11.0209.19 QTY:1

PLT TYP. Wave

FL/-/5/-/-/R/-

Scale =.375"/Ft.

WILLIAM H. KRICK
LICENSE
No. 70861
STATE OF FLORIDA
PROFESSIONAL ENGINEER
01/22/2013

ALPINE
ITW Building Components Group Inc.
Haines City, FL 33844
FL COA #0 278

WARNING READ AND FOLLOW ALL NOTES ON THIS SHEET!
IMPORTANT FURNISH THIS DESIGN TO ALL CONTRACTORS INCLUDING INSTALLERS.

Trusses require extreme care in fabricating, handling, shipping, installing and bracing. Refer to and follow the latest edition of BCSI (Building Component Safety Information, by TPI and WTCA) for handling practices prior to performing these functions. Installers shall provide temporary bracing per BCSI. Unless noted otherwise, top chord shall have properly attached structural sheathing and bottom chord shall have a properly attached rigid ceiling. Locations shown for permanent lateral restraint of webs shall have bracing installed per BCSI sections B3, B7 or B10, as applicable.

ITW Building Components Group Inc. (ITWBCG) shall not be responsible for any deviation from this design, any failure to build the truss in conformance with ANSI/TPI 1, or for handling, shipping, installation & bracing of trusses. Apply plates to each face of truss and position as shown above and on the Joint Details, unless noted otherwise. Refer to drawings 160A-Z for standard plate positions. A seal on this drawing or cover page listing this drawing, indicates acceptance of professional engineering responsibility solely for the design shown. The suitability and use of this design for any structure is the responsibility of the Building Designer per ANSI/TPI 1 Sec.2. For more information see: This job's general notes page; ITW-BCG: www.itwbcg.com; TPI: www.tpinst.org; WTCA: www.sbcindustry.com; ICC: www.iccsafe.org

TC LL	40.0 PSF	REF	R9114- 81520
TC DL	10.0 PSF	DATE	01/22/13
BC DL	5.0 PSF	DRW	HCUSR9114 13022200
BC LL	0.0 PSF	HC-ENG	WHK/WHK
TOT.LD.	55.0 PSF	SEQN-	97212
DUR.FAC.	1.00	FROM	SDY
SPACING	24.0"	JREF-	1UT39114Z03

(120912F--Anderson Truss Co. Patel Residence -- Lot 1 Hills Of Windsor , ** - F41)

Top chord 4x2 SP_#1_12A
Bot chord 4x2 SP_#1_12A
Webs 4x2 SP_#3__12A

Lumber grades designated with "12A" use design values approved 1/5/2012 by ALSC.

Special loads
------(Lumber Dur.Fac.=1.00 / Plate Dur.Fac.=1.00)
TC- From 100 plf at 0.00 to 100 plf at 19.47
BC- From 10 plf at 0.00 to 10 plf at 19.47
TC- 738.00 lb Conc. Load at 4.42

See detail STRBRIBR0211 for bracing and bridging recommendations.

Max JT VERT DEFL: LL: 0.26" DL: 0.27" recommended camber 3/8"

Deflection meets L/360 live and L/240 total load. Creep increase factor for dead load is 1.50.

Truss must be installed as shown with top chord up.

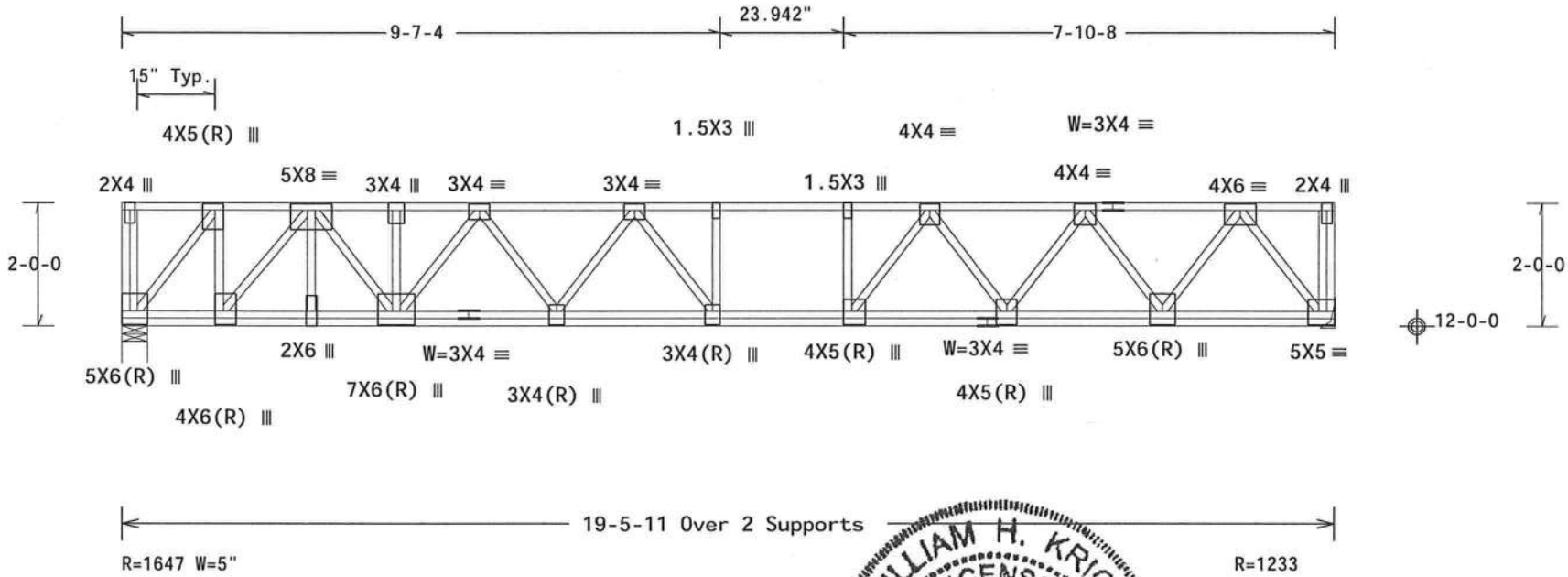

Design Crit: FBC2010Res/TPI-2007(STD)
FT/RT=12%(0%)/10(0)

PLT TYP. Wave

10.03.11.0209.19 QTY 1

FL/-/5/-/-/R/-

Scale =.375"/Ft.

WILLIAM H. KRICK
LICENSE
No. 70861
STATE OF FLORIDA
PROFESSIONAL ENGINEER
01/22/2013

ALPINE
ITW Building Components Group Inc.
Haines City, FL 33844
FL COA #0 278

WARNING READ AND FOLLOW ALL NOTES ON THIS SHEET!
IMPORTANT FURNISH THIS DESIGN TO ALL CONTRACTORS INCLUDING INSTALLERS.

Trusses require extreme care in fabricating, handling, shipping, installing and bracing. Refer to and follow the latest edition of BCSI (Building Component Safety Information, by TPI and WTCA) for safety practices prior to performing these functions. Installers shall provide temporary bracing per BCSI. Unless noted otherwise, top chord shall have properly attached structural sheathing and bottom chord shall have a properly attached rigid ceiling. Locations shown for permanent lateral restraint of webs shall have bracing installed per BCSI sections B3, B7 or B10, as applicable.

ITW Building Components Group Inc. (ITWBCG) shall not be responsible for any deviation from this design, any failure to build the truss in conformance with ANSI/TPI 1, or for handling, shipping, installation and bracing of trusses. Apply plates to each face of truss and position as shown above and on the Joint Details, unless noted otherwise. Refer to drawings 160A-Z for standard plate positions. A seal on this drawing or cover page listing this drawing, indicates acceptance of professional engineering responsibility solely for the design shown. The suitability and use of this design for any structure is the responsibility of the Building Designer per ANSI/TPI 1 Sec.2. For more information see: This job's general notes page; ITW-BCG: www.itwbcg.com; TPI: www.tpinst.org; WTCA: www.sbcindustry.com; ICC: www.iccsafe.org

TC LL	40.0 PSF	REF	R9114- 81521
TC DL	10.0 PSF	DATE	01/22/13
BC DL	5.0 PSF	DRW	HCUSR9114 13022201
BC LL	0.0 PSF	HC-ENG	WHK/WHK
TOT.LD.	55.0 PSF	SEQN-	97213
DUR.FAC.	1.00	FROM	SDY
SPACING	24.0"	JREF-	1UT39114Z03

(120912F--Anderson Truss Co. Patel Residence -- Lot 1 Hills Of Windsor , ** - F42)

Top chord 4x2 SP_#1_12A
Bot chord 4x2 SP_#1_12A
Webs 4x2 SP_#3__12A

Lumber grades designated with "12A" use design values approved 1/5/2012 by ALSC.

Special loads
------(Lumber Dur.Fac.=1.00 / Plate Dur.Fac.=1.00)
TC- From 100 plf at 0.00 to 100 plf at 17.47
BC- From 10 plf at 0.00 to 10 plf at 17.47
TC- 738.00 lb Conc. Load at 4.42

+ 2x6 continuous strongback. See detail STRBRIBR0211 for bracing and bridging recommendations.

Deflection meets L/360 live and L/240 total load. Creep increase factor for dead load is 1.50.

Truss must be installed as shown with top chord up.

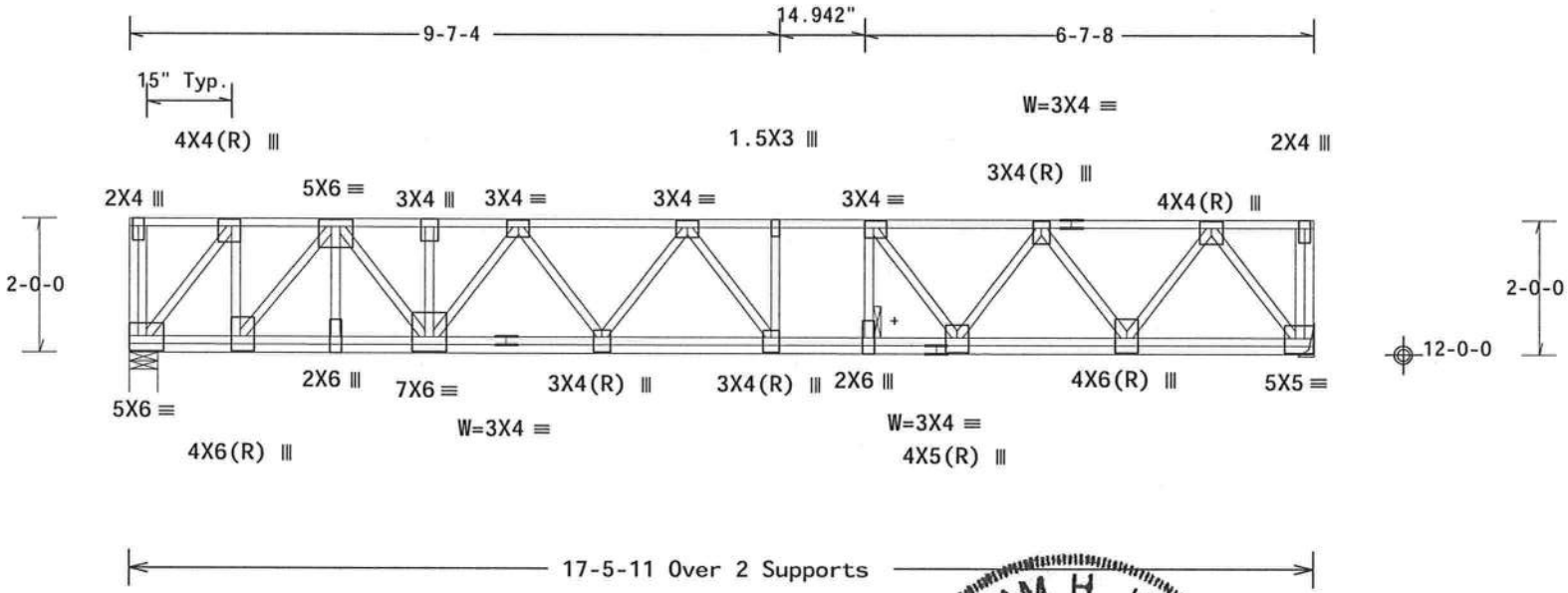

Design Crit: FBC2010Res/TPI-2007(STD)
FT/RT=12%(0%)/10(0) 10.03.11.0209 19 QTY:1 FL/-/5/-/-/R/-

PLT TYP. Wave

Scale =.375"/Ft.

WILLIAM H. KRICK LICENSE No. 70861 STATE OF FLORIDA PROFESSIONAL ENGINEER

01/22/2013

ALPINE
ITW Building Components Group Inc.
Haines City, FL 33844
FL COA #0 278

WARNING READ AND FOLLOW ALL NOTES ON THIS SHEET!
IMPORTANT FURNISH THIS DESIGN TO ALL CONTRACTORS INCLUDING INSTALLERS.

Trusses require extreme care in fabricating, handling, shipping, installing and bracing. Refer to and follow the latest edition of BCSI (Building Component Safety Information, by TPI and WTCA) for safety practices prior to performing these functions. Installers shall provide temporary bracing per BCSI. Unless noted otherwise, top chord shall have properly attached structural sheathing and bottom chord shall have a properly attached rigid ceiling. Locations shown for permanent lateral restraint of webs shall have bracing installed per BCSI sections B3, B7 or B10, as applicable.

ITW Building Components Group Inc. (ITWBCG) shall not be responsible for any deviation from this design, any failure to build the truss in conformance with ANSI/TPI 1, or for handling, shipping, installation and bracing of trusses. Apply plates to each face of truss and position as shown above and on the Joint Details, unless noted otherwise. Refer to drawings 160A-Z for standard plate positions. A seal on this drawing or cover page listing this drawing, indicates acceptance of professional engineering responsibility solely for the design shown. The suitability and use of this design for any structure is the responsibility of the Building Designer per ANSI/TPI 1 Sec.2. For more information see: This job's general notes page; ITW-BCG: www.itwbcg.com; TPI: www.tpinst.org; WTCA: www.sbcindustry.com; ICC: www.iccsafe.org

TC LL	40.0 PSF	REF	R9114- 81522
TC DL	10.0 PSF	DATE	01/22/13
BC DL	5.0 PSF	DRW	HCUSR9114 13022202
BC LL	0.0 PSF	HC-ENG	WHK/WHK
TOT.LD.	55.0 PSF	SEQN-	97214
DUR.FAC.	1.00	FROM	SDY
SPACING	24.0"	JREF-	1UT39114Z03

(120912F--Anderson Truss Co. Patel Residence -- Lot 1 Hills Of Windsor , ** - F43)

Top chord 4x2 SP_#1_12A
Bot chord 4x2 SP_#1_12A
Webs 4x2 SP_#3__12A

Lumber grades designated with "12A" use design values approved 1/5/2012 by ALSC.

+ 2x6 continuous strongback. See detail STRBRIBR0211 for bracing and bridging recommendations.

Deflection meets L/360 live and L/240 total load. Creep increase factor for dead load is 1.50.

Truss must be installed as shown with top chord up.

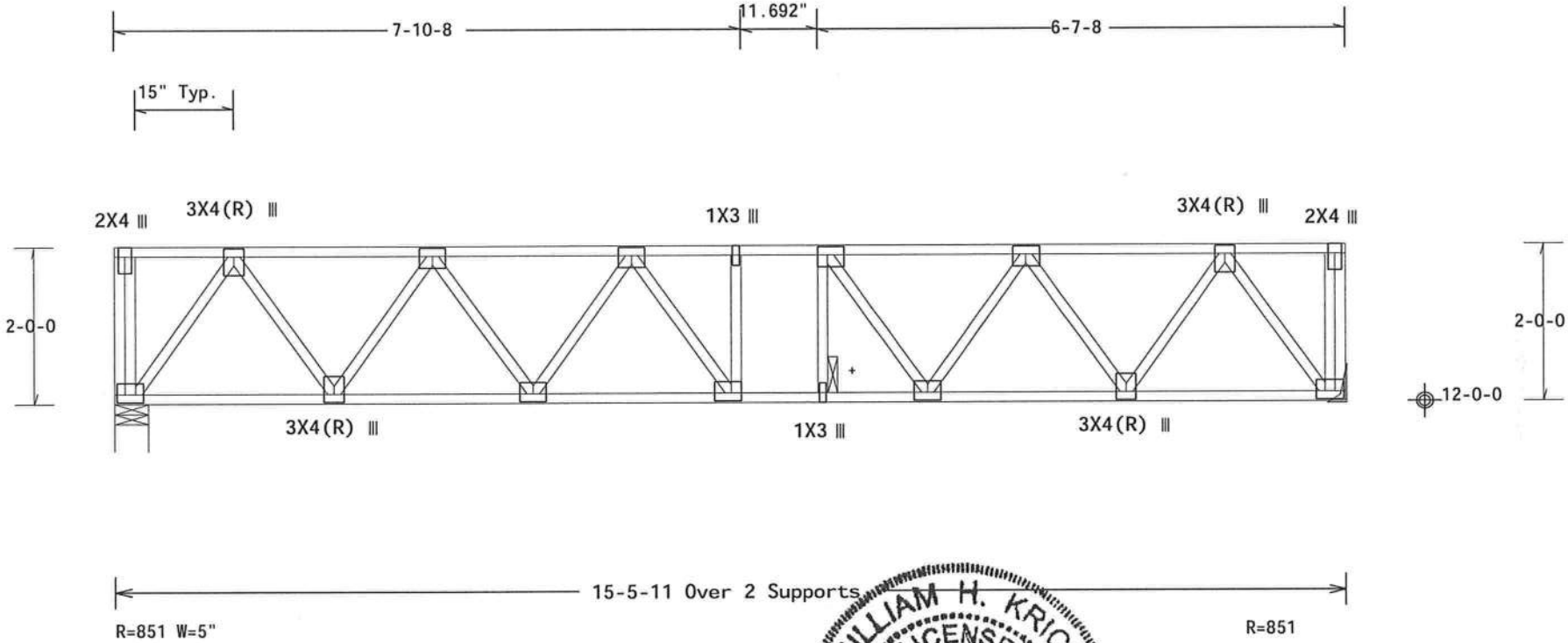

Note: All Plates Are 3X4 Except As Shown.

Design Crit: FBC2010Res/TPI-2007(STD)

PLT TYP. Wave

FT/RT=12%(0%)/10(0) 10.03.11.0209.19 QTY:1 FL/-/5/-/-/R/- Scale =.5"/Ft.

ALPINE
ITW Building Components Group Inc.
Haines City, FL 33844
FL COA #0 278

WARNING READ AND FOLLOW ALL NOTES ON THIS SHEET!
IMPORTANT FURNISH THIS DESIGN TO ALL CONTRACTORS INCLUDING INSTALLERS.

Trusses require extreme care in fabricating, handling, shipping, installing and bracing. Refer to and follow the latest edition of BCSI (Building Component Safety Information, by TPI and WTCA) for general practices prior to performing these functions. Installers shall provide temporary bracing per BCSI. Unless noted otherwise, top chord shall have properly attached structural sheathing and bottom chord shall have a properly attached rigid ceiling. Locations shown for permanent lateral restraint of webs shall have bracing installed per BCSI sections B3, B7 or B10, as applicable.

ITW Building Components Group Inc. (ITWBCG) shall not be responsible for any deviation from this design, any failure to build the truss in conformance with ANSI/TPI 1, or for handling, shipping, installation and bracing of trusses. Apply plates to each face of truss and position as shown above and on the Joint Details, unless noted otherwise. Refer to drawings 160A-Z for standard plate positions. A seal on this drawing or cover page listing this drawing, indicates acceptance of professional engineering responsibility solely for the design shown. The suitability and use of this design for any structure is the responsibility of the Building Designer per ANSI/TPI 1 Sec.2. For more information see: This job's general notes page; ITW-BCG: www.itwbcg.com; TPI: www.tpinst.org; WTCA: www.sbcindustry.com; ICC: www.iccsafe.org

WILLIAM H. KRICK LICENSE No. 70861 STATE OF FLORIDA PROFESSIONAL ENGINEER
01/22/2013

TC LL	40.0 PSF	REF	R9114- 81523
TC DL	10.0 PSF	DATE	01/22/13
BC DL	5.0 PSF	DRW	HCUSR9114 13022203
BC LL	0.0 PSF	HC-ENG	WHK/WHK
TOT.LD.	55.0 PSF	SEQN-	97215
DUR.FAC.	1.00	FROM	SDY
SPACING	24.0"	JREF-	1UT39114Z03

(120912F--Anderson Truss Co. Patel Residence -- Lot 1 Hills Of Windsor , ** - F44)

Top chord 4x2 SP_#1_12A
Bot chord 4x2 SP_#1_12A
Webs 4x2 SP_#3__12A

Lumber grades designated with "12A" use design values approved 1/5/2012 by ALSC.

Deflection meets L/360 live and L/240 total load. Creep increase factor for dead load is 1.50.

Truss must be installed as shown with top chord up.

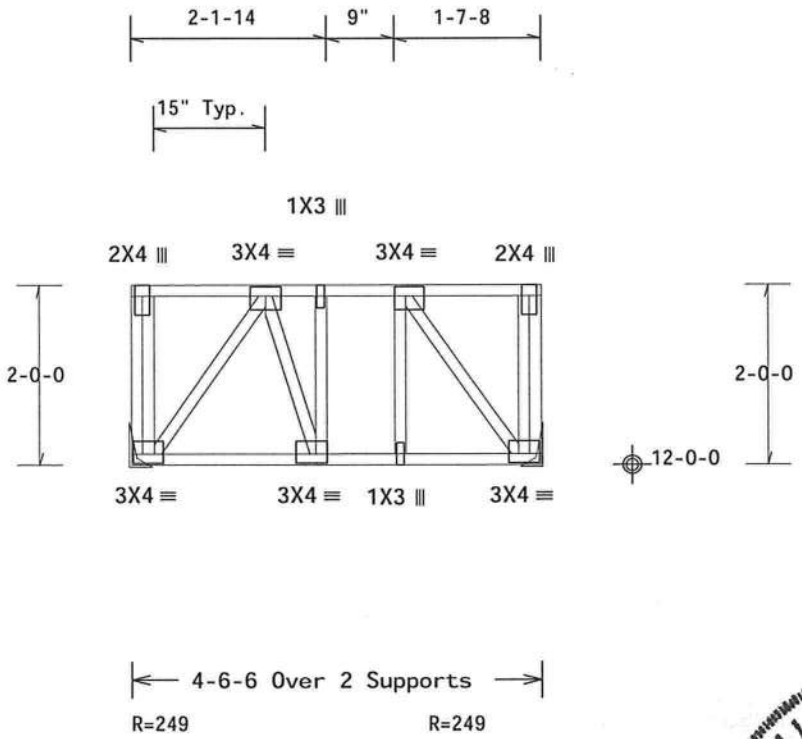

Design Crit: FBC2010Res/TPI-2007(STD)
FT/RT=12%(0%)/10(0) 10.03.11.0209 19 QTY:1 FL/-/5/-/-/R/-

PLT TYP. Wave

Scale =.5"/Ft.

WILLIAM H. KRICK LICENSE No 70861 STATE OF FLORIDA PROFESSIONAL ENGINEER

01/22/2013

ALPINE
ITW Building Components Group Inc.
Haines City, FL 33844
FL COA #0 278

WARNING READ AND FOLLOW ALL NOTES ON THIS SHEET!
IMPORTANT FURNISH THIS DESIGN TO ALL CONTRACTORS INCLUDING INSTALLERS.

Trusses require extreme care in fabricating, handling, shipping, installing and bracing. Refer to and follow the latest edition of BCSI (Building Component Safety Information, by TPI and WTCA) for safety practices prior to performing these functions. Installers shall provide temporary bracing per BCSI. Unless noted otherwise, top chord shall have properly attached structural sheathing and bottom chord shall have a properly attached rigid ceiling. Locations shown for permanent lateral restraint of webs shall have bracing installed per BCSI sections B3, B7 or B10, as applicable.

ITW Building Components Group Inc. (ITWBCG) shall not be responsible for any deviation from this design, any failure to build the truss in conformance with ANSI/TPI 1, or for handling, shipping, installation and bracing of trusses. Apply plates to each face of truss and position as shown above and on the Joint Details, unless noted otherwise. Refer to drawings 160A-Z for standard plate positions. A seal on this drawing or cover page listing this drawing, indicates acceptance of professional engineering responsibility solely for the design shown. The suitability and use of this design for any structure is the responsibility of the Building Designer per ANSI/TPI 1 Sec.2. For more information see: This job's general notes page: ITW-BCG: www.itwbcg.com; TPI: www.tpinst.org; WTCA: www.sbcindustry.com; ICC: www.iccsafe.org

TC LL	40.0 PSF	REF	R9114- 81524
TC DL	10.0 PSF	DATE	01/22/13
BC DL	5.0 PSF	DRW	HCUSR9114 13022204
BC LL	0.0 PSF	HC-ENG	WHK/WHK
TOT.LD.	55.0 PSF	SEQN-	97216
DUR.FAC.	1.00	FROM	SDY
SPACING	24.0"	JREF-	1UT39114Z03

(120912F--Anderson Truss Co. Patel Residence -- Lot 1 Hills Of Windsor , ** - F45)

Top chord 4x2 SP_#1_12A
Bot chord 4x2 SP_#1_12A
Webs 4x2 SP_#3__12A

Lumber grades designated with "12A" use design values approved 1/5/2012 by ALSC.

Truss must be installed as shown with top chord up.

This truss spaced @ 24.0" OC supports additional concentrated load at right end from 12.00' stud wall (13.75 PSF) supporting 0-0-0 roof spans with 0-0-0 overhang. Roof load: 20.00 psf LL and 17.00 psf DL.

Deflection meets L/360 live and L/240 total load. Creep increase factor for dead load is 1.50.

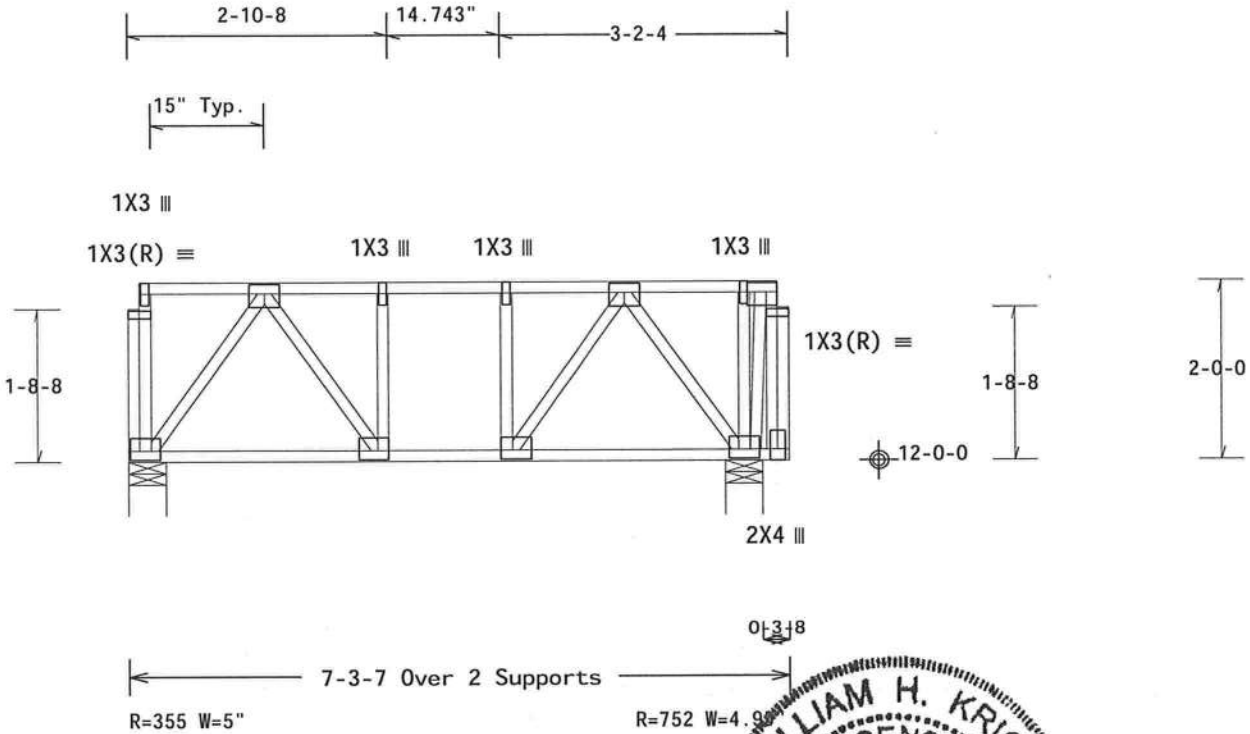

Note: All Plates Are 3X4 Except As Shown.

Design Crit: FBC2010Res/TPI-2007(STD)

PLT TYP. Wave FT/RT=12%(0%)/10(0) 10.03.11.0209.19 QTY: 1 FL/-/5/-/-/R/- Scale =.5"/Ft.

ALPINE
ITW Building Components Group Inc.
Haines City, FL 33844
FL COA #0 278

WARNING READ AND FOLLOW ALL NOTES ON THIS SHEET!
IMPORTANT FURNISH THIS DESIGN TO ALL CONTRACTORS INCLUDING INSTALLERS.

Trusses require extreme care in fabricating, handling, shipping, installing and bracing. Refer to and follow the latest edition of BCSI (Building Component Safety Information, by TPI and WTCA) for safety practices prior to performing these functions. Installers shall provide temporary bracing per BCSI. Unless noted otherwise, top chord shall have properly attached structural sheathing and bottom chord shall have a properly attached rigid ceiling. Locations shown for permanent lateral restraint of webs shall have bracing installed per BCSI sections B3, B7 or B10, as applicable.

ITW Building Components Group Inc. (ITWBCG) shall not be responsible for any deviation from this design, any failure to build the truss in conformance with ANSI/TPI 1, or for handling, shipping, installation and bracing of trusses. Apply plates to each face of truss and position as shown above and on the Joint Details, unless noted otherwise. Refer to drawings 160A-Z for standard plate positions. A seal on this drawing or cover page listing this drawing, indicates acceptance of professional engineering responsibility solely for the design shown. The suitability and use of this design for any structure is the responsibility of the Building Designer per ANSI/TPI 1 Sec.2. For more information see: This job's general notes page; ITW-BCG: www.itwbcg.com; TPI: www.tpinst.org; WTCA: www.sbcindustry.com; ICC: www.iccsafe.org

WILLIAM H. KRICK
LICENSE
No. 70861
STATE OF FLORIDA
PROFESSIONAL ENGINEER
01/22/2013

TC LL	40.0 PSF	REF	R9114- 81525
TC DL	10.0 PSF	DATE	01/21/13
BC DL	5.0 PSF	DRW	HCUSR9114 13021239
BC LL	0.0 PSF	HC-ENG	JB/AP
TOT.LD.	55.0 PSF	SEQN-	46816
DUR.FAC.	1.00	FROM	SDY
SPACING	24.0"	JREF-	1UT39114Z03

(120912F--Anderson Truss Co. Patel Residence -- Lot 1 Hills Of Windsor , ** - F46)

Top chord 4x2 SP_#1_12A
Bot chord 4x2 SP_#1_12A
Webs 4x2 SP_#3__12A

Lumber grades designated with "12A" use design values approved 1/5/2012 by ALSC.

Deflection meets L/360 live and L/240 total load. Creep increase factor for dead load is 1.50.

Truss must be installed as shown with top chord up.

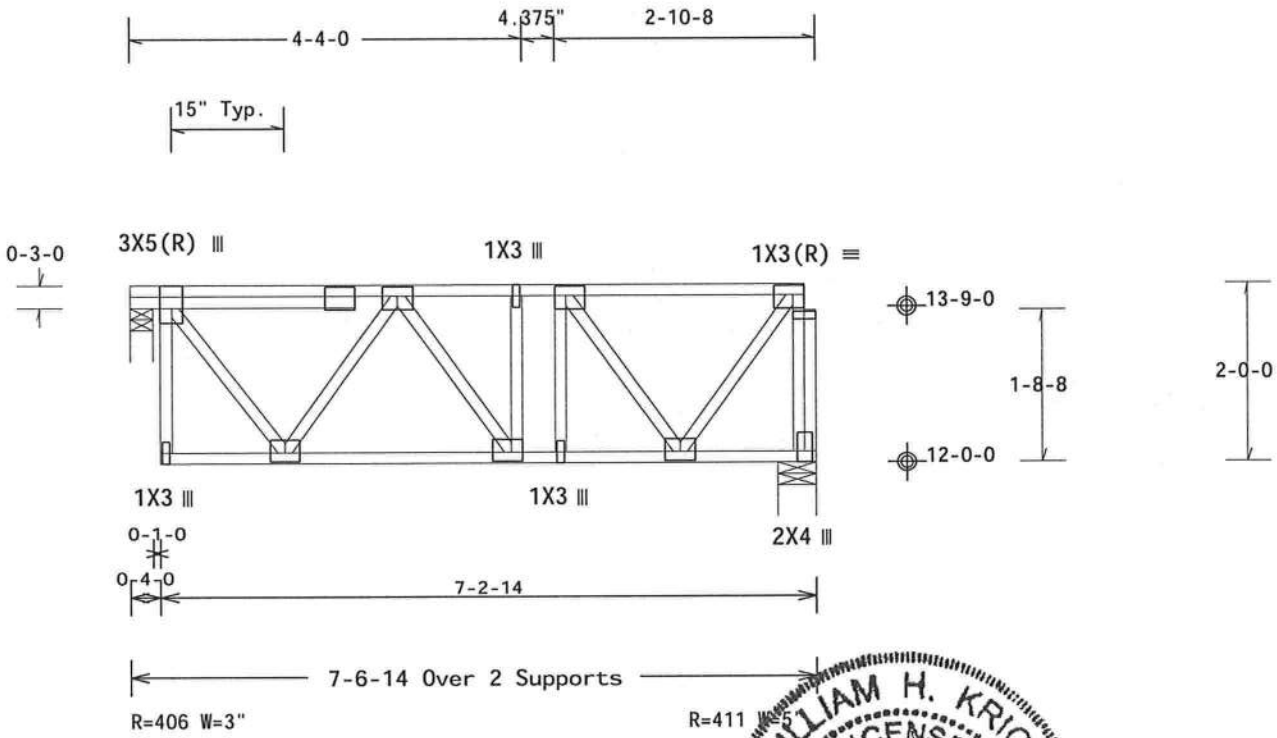

Note: All Plates Are 3X4 Except As Shown.

Design Crit: FBC2010Res/TPI-2007(STD)

PLT TYP. Wave

FT/RT=12%(0%)/10(0) 10.03.11.0209.19 QTY:3 FL/-/5/-/-/R/- Scale =.5"/Ft.

WILLIAM H. KRICK LICENSE No. 70861 STATE OF FLORIDA PROFESSIONAL ENGINEER

01/22/2013

ALPINE
ITW Building Components Group Inc.
Haines City, FL 33844
FL COA #0 278

WARNING READ AND FOLLOW ALL NOTES ON THIS SHEET!
IMPORTANT FURNISH THIS DESIGN TO ALL CONTRACTORS INCLUDING INSTALLERS.

Trusses require extreme care in fabricating, handling, shipping, installing and bracing. Refer to and follow the latest edition of BCSI (Building Component Safety Information, by TPI and WTCA) for safety practices prior to performing these functions. Installers shall provide temporary bracing per BCSI. Unless noted otherwise, top chord shall have properly attached structural sheathing and bottom chord shall have a properly attached rigid ceiling. Locations shown for permanent lateral restraint of webs shall have bracing installed per BCSI sections B3, B7 or B10, as applicable.

ITW Building Components Group Inc. (ITWBCG) shall not be responsible for any deviation from this design, any failure to build the truss in conformance with ANSI/TPI 1, or for handling, shipping, installation and bracing of trusses. Apply plates to each face of truss and position as shown above and on the Joint Details, unless noted otherwise. Refer to drawings 160A-Z for standard plate positions. A seal on this drawing or cover page listing this drawing, indicates acceptance of professional engineering responsibility solely for the design shown. The suitability and use of this design for any structure is the responsibility of the Building Designer per ANSI/TPI 1 Sec.2. For more information see: This job's general notes page; ITW-BCG: www.itwbcg.com; TPI: www.tpinst.org; WTCA: www.sbcindustry.com; ICC: www.iccsafe.org

TC LL	40.0 PSF	REF	R9114- 81526
TC DL	10.0 PSF	DATE	01/21/13
BC DL	5.0 PSF	DRW	HCUSR9114 13021246
BC LL	0.0 PSF	HC-ENG	JB/AP
TOT.LD.	55.0 PSF	SEQN-	46817
DUR.FAC.	1.00	FROM	SDY
SPACING	24.0"	JREF-	1UT39114Z03

(120912F--Anderson Truss Co. Patel Residence -- Lot 1 Hills Of Windsor , ** - F47)

Top chord 4x2 SP_#1_12A
Bot chord 4x2 SP_#1_12A
Webs 4x2 SP_#3__12A

Lumber grades designated with "12A" use design values approved 1/5/2012 by ALSC.

Deflection meets L/360 live and L/240 total load. Creep increase factor for dead load is 1.50.

Special loads
------(Lumber Dur.Fac.=1.00 / Plate Dur.Fac.=1.00)
TC- From 50 plf at 0.00 to 50 plf at 4.64
TC- From 100 plf at 4.64 to 100 plf at 7.45
BC- From 5 plf at 0.33 to 5 plf at 4.64
BC- From 10 plf at 4.64 to 10 plf at 7.57
TC- 341.10 lb Conc. Load at 1.81
TC- 231.10 lb Conc. Load at 4.64

Truss must be installed as shown with top chord up.

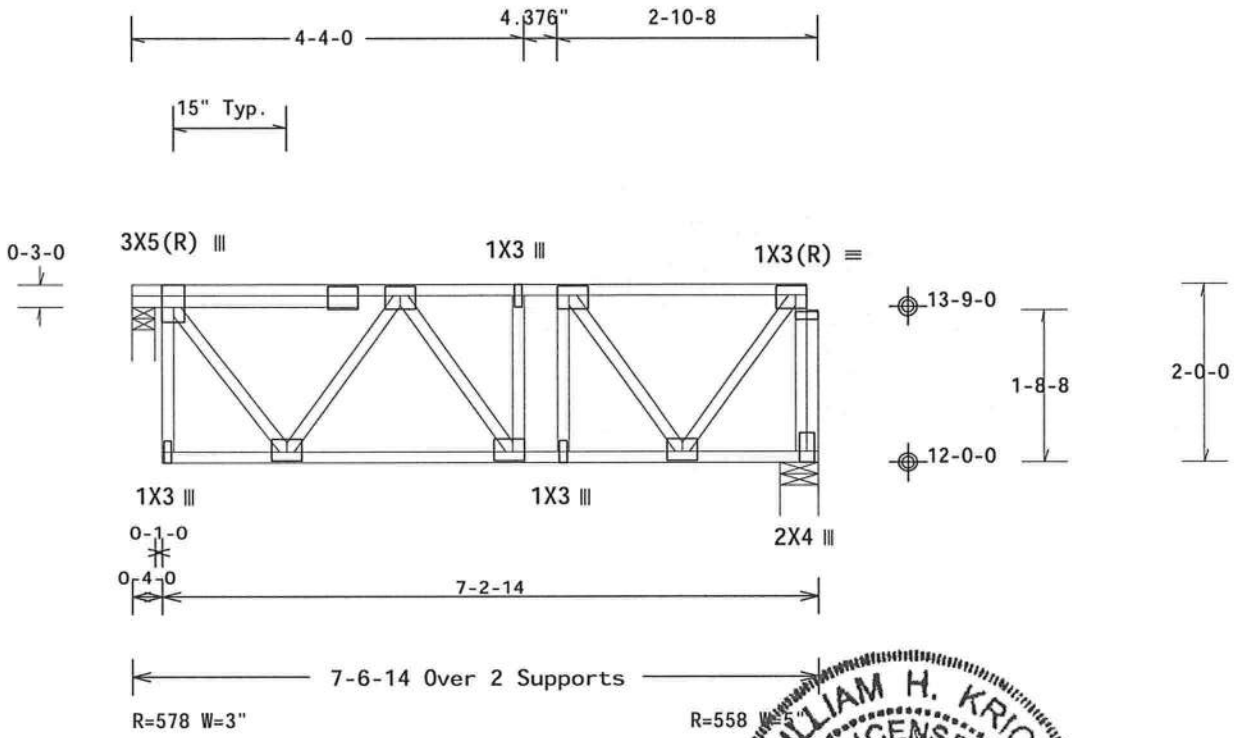

Note: All Plates Are 3X4 Except As Shown.

Design Crit: FBC2010Res/TPI-2007(STD)

PLT TYP. Wave FT/RT=12%(0%)/10(0) 10.03.11.0209.19 QTY: 1 FL/-/5/-/-/R/- Scale =.5"/Ft.

WILLIAM H. KRICK LICENSE No. 70861 STATE OF FLORIDA PROFESSIONAL ENGINEER
01/22/2013

ALPINE
ITW Building Components Group Inc.
Haines City, FL 33844
FL COA #0 278

WARNING READ AND FOLLOW ALL NOTES ON THIS SHEET!
IMPORTANT FURNISH THIS DESIGN TO ALL CONTRACTORS INCLUDING INSTALLERS.

Trusses require extreme care in fabricating, handling, shipping, installing and bracing. Refer to and follow the latest edition of BCSI (Building Component Safety Information, by TPI and WTCA) for safety practices prior to performing these functions. Installers shall provide temporary bracing per BCSI. Unless noted otherwise, top chord shall have properly attached structural sheathing and bottom chord shall have a properly attached rigid ceiling. Locations shown for permanent lateral restraint of webs shall have bracing installed per BCSI sections B3, B7 or B10, as applicable.

ITW Building Components Group Inc. (ITWBCG) shall not be responsible for any deviation from this design, any failure to build the truss in conformance with ANSI/TPI 1, or for handling, shipping, installation and bracing of trusses. Apply plates to each face of truss and position as shown above and on the Joint Details, unless noted otherwise. Refer to drawings 160A-Z for standard plate positions. A seal on this drawing or cover page listing this drawing, indicates acceptance of professional engineering responsibility solely for the design shown. The suitability and use of this design for any structure is the responsibility of the Building Designer per ANSI/TPI 1 Sec.2. For more information see: This job's general notes page; ITW-BCG: www.itwbcg.com; TPI: www.tpinst.org; WTCA: www.sbcindustry.com; ICC: www.iccsafe.org

TC LL	40.0 PSF	REF	R9114- 81527
TC DL	10.0 PSF	DATE	01/21/13
BC DL	5.0 PSF	DRW	HCUSR9114 13021244
BC LL	0.0 PSF	HC-ENG	JB/AP
TOT.LD.	55.0 PSF	SEQN-	46857
DUR.FAC.	1.00	FROM	SDY
SPACING	24.0"	JREF-	1UT39114Z03

(120912F--Anderson Truss Co. Patel Residence -- Lot 1 Hills Of Windsor , ** - F48)

Top chord 4x2 SP_#1_12A
Bot chord 4x2 SP_#1_12A
Webs 4x2 SP_#3__12A

Lumber grades designated with "12A" use design values approved 1/5/2012 by ALSC.

(H1) = (J) Hanger not calculated (1)4x2 SP_#1_12A supporting member.

Deflection meets L/360 live and L/240 total load. Creep increase factor for dead load is 1.50.

Truss must be installed as shown with top chord up.

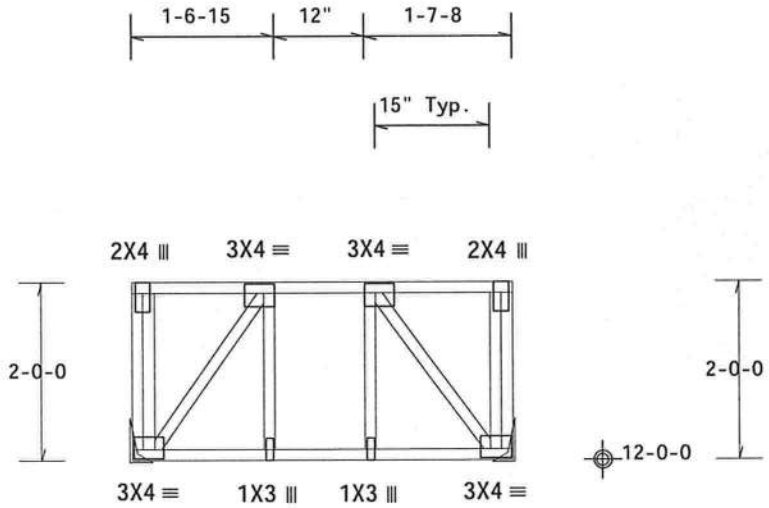

← 4-2-7 Over 2 Supports →

R=231 H=H1

R=231 H=H2

Design Crit: FBC2010Res/TPI-2007(STD)
FT/RT=12%(0%)/10(0)

PLT TYP. Wave

10.03.11.0209.19 QTY: 1

FL/-/5/-/-/R/-

Scale =.5"/Ft.

WILLIAM H. KRICK LICENSE No. 70861 STATE OF FLORIDA PROFESSIONAL ENGINEER

01/22/2013

ALPINE
ITW Building Components Group Inc.
Haines City, FL 33844
FL COA #0 278

WARNING READ AND FOLLOW ALL NOTES ON THIS SHEET!
IMPORTANT FURNISH THIS DESIGN TO ALL CONTRACTORS INCLUDING INSTALLERS.

Trusses require extreme care in fabricating, handling, shipping, installing and bracing. Refer to and follow the latest edition of BCSI (Building Component Safety Information, by TPI and WTCA) for safety practices prior to performing these functions. Installers shall provide temporary bracing per BCSI. Unless noted otherwise, top chord shall have properly attached structural sheathing and bottom chord shall have a properly attached rigid ceiling. Locations shown for permanent lateral restraint of webs shall have bracing installed per BCSI sections B3, B7 or B10, as applicable.

ITW Building Components Group Inc. (ITWBCG) shall not be responsible for any deviation from this design, any failure to build the truss in conformance with ANSI/TPI 1, or for handling, shipping, installation and bracing of trusses. Apply plates to each face of truss and position as shown above and on the Joint Details, unless noted otherwise. Refer to drawings 160A-Z for standard plate positions. A seal on this drawing or cover page listing this drawing, indicates acceptance of professional engineering responsibility solely for the design shown. The suitability and use of this design for any structure is the responsibility of the Building Designer per ANSI/TPI 1 Sec.2. For more information see: This job's general notes page; ITW-BCG: www.itwbcg.com; TPI: www.tpinst.org; WTCA: www.sbcindustry.com; ICC: www.iccsafe.org

TC LL	40.0 PSF	REF	R9114- 81528
TC DL	10.0 PSF	DATE	01/21/13
BC DL	5.0 PSF	DRW	HCUSR9114 13021241
BC LL	0.0 PSF	HC-ENG	JB/AP
TOT.LD.	55.0 PSF	SEQN-	46818
DUR.FAC.	1.00	FROM	SDY
SPACING	24.0"	JREF-	1UT39114Z03

(120912F--Anderson Truss Co. Patel Residence -- Lot 1 Hills Of Windsor , ** - F49)

Top chord 4x2 SP_#1_12A
Bot chord 4x2 SP_#1_12A
Webs 4x2 SP_#3__12A

Lumber grades designated with "12A" use design values approved 1/5/2012 by ALSC.

(H1) = (J) Hanger not calculated (1)4x2 SP_#1_12A supporting member.

Deflection meets L/360 live and L/240 total load. Creep increase factor for dead load is 1.50.

Truss must be installed as shown with top chord up.

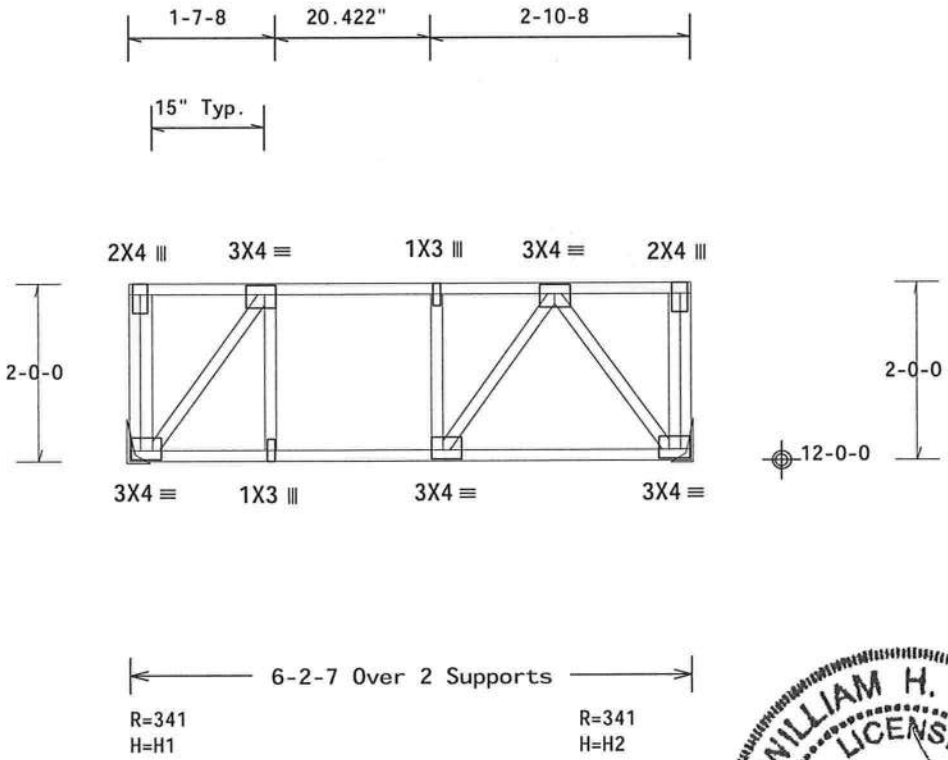

Design Crit: FBC2010Res/TPI-2007(STD)
FT/RT=12%(0%)/10(0)

10.03.11.0209.19 QTY: 1

FL/-/5/-/-/R/-

Scale =.5"/Ft.

PLT TYP. Wave

ALPINE
ITW Building Components Group Inc.
Haines City, FL 33844
FL COA #0 278

WARNING READ AND FOLLOW ALL NOTES ON THIS SHEET!
IMPORTANT FURNISH THIS DESIGN TO ALL CONTRACTORS INCLUDING INSTALLERS.

Trusses require extreme care in fabricating, handling, shipping, installing and bracing. Refer to and follow the latest edition of BCSI (Building Component Safety Information, by TPI and WTCA) for safety practices prior to performing these functions. Installers shall provide temporary bracing per BCSI. Unless noted otherwise, top chord shall have properly attached structural sheathing and bottom chord shall have a properly attached rigid ceiling. Locations shown for permanent lateral restraint of webs shall have bracing installed per BCSI sections B3, B7 or B10, as applicable.

ITW Building Components Group Inc. (ITWBCG) shall not be responsible for any deviation from this design, any failure to build the truss in conformance with ANSI/TPI 1, or for handling, shipping, installation and bracing of trusses. Apply plates to each face of truss and position as shown above and on the Joint Details, unless noted otherwise. Refer to drawings 160A-Z for standard plate positions. A seal on this drawing or cover page listing this drawing, indicates acceptance of professional engineering responsibility solely for the design shown. The suitability and use of this design for any structure is the responsibility of the Building Designer per ANSI/TPI 1 Sec.2. For more information see: This job's general notes page; ITW-BCG: www.itwbcg.com; TPI: www.tpinst.org; WTCA: www.sbcindustry.com; ICC: www.iccsafe.org

WILLIAM H. KRICK
LICENSE
No. 70861
STATE OF FLORIDA
PROFESSIONAL ENGINEER
01/22/2013

TC LL	40.0 PSF	REF	R9114- 81529
TC DL	10.0 PSF	DATE	01/21/13
BC DL	5.0 PSF	DRW	HCUSR9114 13021243
BC LL	0.0 PSF	HC-ENG	JB/AP
TOT.LD.	55.0 PSF	SEQN-	46819
DUR.FAC.	1.00	FROM	SDY
SPACING	24.0"	JREF-	1UT39114Z03

THIS DWG PREPARED FROM COMPUTER INPUT (LOADS & DIMENSIONS) SUBMITTED BY TRUSS MFR.

(120912F--Anderson Truss Co. Patel Residence -- Lot 1 Hills Of Windsor , ** - F50)

Top chord 4x2 SP_#1_12A
Bot chord 4x2 SP_#1_12A
Webs 4x2 SP_#3__12A

Lumber grades designated with "12A" use design values approved 1/5/2012 by ALSC.

Deflection meets L/360 live and L/240 total load. Creep increase factor for dead load is 1.50.

Truss must be installed as shown with top chord up.

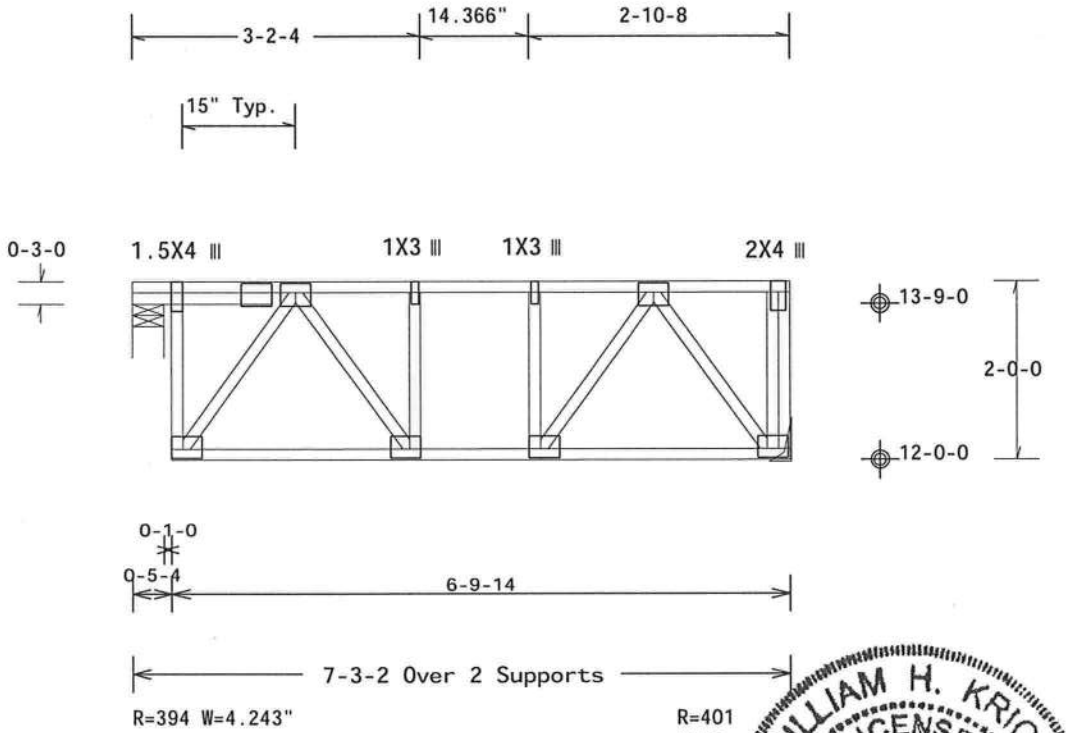

Note: All Plates Are 3X4 Except As Shown.

Design Crit: FBC2010Res/TPI-2007(STD)

PLT TYP. Wave

FT/RT=12%(0%)/10(0)

10.03.11.0209.19 QTY: 1

FL/-/5/-/-/R/-

Scale =.5"/Ft.

WILLIAM H. KRICK
LICENSE
No. 70861
STATE OF FLORIDA
PROFESSIONAL ENGINEER

01/22/2013

ALPINE
ITW Building Components Group Inc.
Haines City, FL 33844
FL COA #0 278

WARNING READ AND FOLLOW ALL NOTES ON THIS SHEET!
IMPORTANT FURNISH THIS DESIGN TO ALL CONTRACTORS INCLUDING INSTALLERS.

Trusses require extreme care in fabricating, handling, shipping, installing and bracing. Refer to and follow the latest edition of BCSI (Building Component Safety Information, by TPI and WTCA) for general practices prior to performing these functions. Installers shall provide temporary bracing per BCSI. Unless noted otherwise, top chord shall have properly attached structural sheathing and bottom chord shall have a properly attached rigid ceiling. Locations shown for permanent lateral restraint of webs shall have bracing installed per BCSI sections B3, B7 or B10, as applicable.

ITW Building Components Group Inc. (ITWBCG) shall not be responsible for any deviation from this design, any failure to build the truss in conformance with ANSI/TPI 1, or for handling, shipping, installation and bracing of trusses. Apply plates to each face of truss and position as shown above and on the Joint Details, unless noted otherwise. Refer to drawings 160A-Z for standard plate positions. A seal on this drawing or cover page listing this drawing, indicates acceptance of professional engineering responsibility solely for the design shown. The suitability and use of this design for any structure is the responsibility of the Building Designer per ANSI/TPI 1 Sec.2. For more information see: This job's general notes page; ITW-BCG: www.itwbcg.com; TPI: www.tpinst.org; WTCA: www.sbcindustry.com; ICC: www.iccsafe.org

TC LL	40.0 PSF	REF	R9114- 81530
TC DL	10.0 PSF	DATE	01/21/13
BC DL	5.0 PSF	DRW	HCUSR9114 13021240
BC LL	0.0 PSF	HC-ENG	JB/AP
TOT.LD.	55.0 PSF	SEQN-	46820
DUR.FAC.	1.00	FROM	SDY
SPACING	24.0"	JREF-	1UT39114Z03

(120912F--Anderson Truss Co. Patel Residence -- Lot 1 Hills Of Windsor , ** - F51)

Top chord 4x2 SP_#1_12A
Bot chord 4x2 SP_#1_12A
Webs 4x2 SP_#3__12A

Lumber grades designated with "12A" use design values approved 1/5/2012 by ALSC.

Deflection meets L/360 live and L/240 total load. Creep increase factor for dead load is 1.50.

Truss must be installed as shown with top chord up.

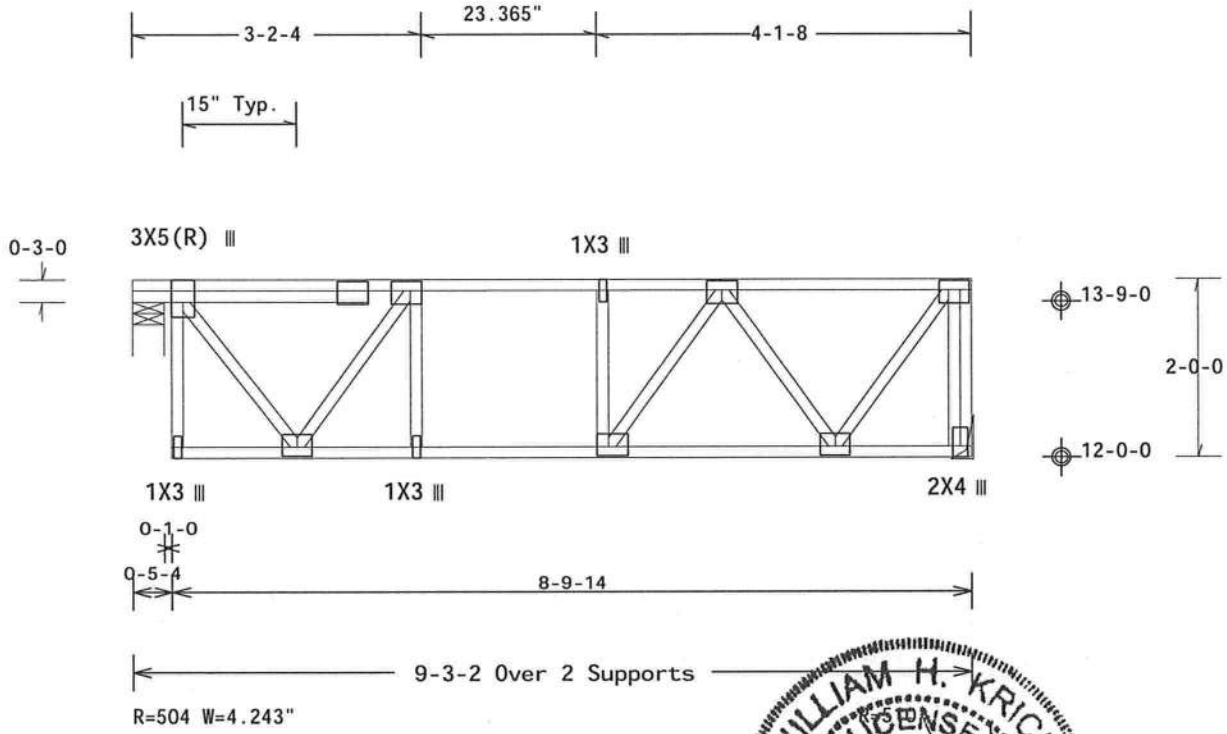

Note: All Plates Are 3X4 Except As Shown.

Design Crit: FBC2010Res/TPI-2007(STD)

PLT TYP. Wave

FT/RT=12%(0%)/10(0)

10.03.11.02.09.19 QTY 1

FL/-/5/-/-/R/-

Scale =.5"/Ft.

WILLIAM H. KRICK
LICENSE
No. 70861
STATE OF FLORIDA
PROFESSIONAL ENGINEER
01/22/2013

ALPINE
ITW Building Components Group Inc.
Haines City, FL 33844
FL COA #0 278

WARNING READ AND FOLLOW ALL NOTES ON THIS SHEET!
IMPORTANT FURNISH THIS DESIGN TO ALL CONTRACTORS INCLUDING INSTALLERS.

Trusses require extreme care in fabricating, handling, shipping, installing and bracing. Refer to and follow the latest edition of BCSI (Building Component Safety Information, by TPI and WTCA) for safety practices prior to performing these functions. Installers shall provide temporary bracing per BCSI. Unless noted otherwise, top chord shall have properly attached structural sheathing and bottom chord shall have a properly attached rigid ceiling. Locations shown for permanent lateral restraint of webs shall have bracing installed per BCSI sections B3, B7 or B10, as applicable.

ITW Building Components Group Inc. (ITWBCG) shall not be responsible for any deviation from this design, any failure to build the truss in conformance with ANSI/TPI 1, or for handling, shipping, installation & bracing of trusses. Apply plates to each face of truss and position as shown above and on the Joint Details, unless noted otherwise. Refer to drawings 160A-Z for standard plate positions. A seal on this drawing or cover page listing this drawing, indicates acceptance of professional engineering responsibility solely for the design shown. The suitability and use of this design for any structure is the responsibility of the Building Designer per ANSI/TPI 1 Sec.2. For more information see: This job's general notes page; ITW-BCG: www.itwbcg.com; TPI: www.tpinst.org; WTCA: www.sbcindustry.com; ICC: www.iccsafe.org

TC LL	40.0 PSF	REF	R9114- 81531
TC DL	10.0 PSF	DATE	01/21/13
BC DL	5.0 PSF	DRW	HCUSR9114 13021242
BC LL	0.0 PSF	HC-ENG	JB/AP
TOT.LD.	55.0 PSF	SEQN-	46821
DUR.FAC.	1.00	FROM	SDY
SPACING	24.0"	JREF-	1UT39114Z03

(120912F--Anderson Truss Co. Patel Residence -- Lot 1 Hills Of Windsor , ** - F52)

Top chord 4x2 SP_#1_12A
Bot chord 4x2 SP_#1_12A
Webs 4x2 SP_#3__12A

Lumber grades designated with "12A" use design values approved 1/5/2012 by ALSC.

Truss must be installed as shown with top chord up.

See detail STRBRIBR0211 for bracing and bridging recommendations.

(H1) = (J) Hanger not calculated Unavailable supporting member.

Deflection meets L/360 live and L/240 total load. Creep increase factor for dead load is 1.50.

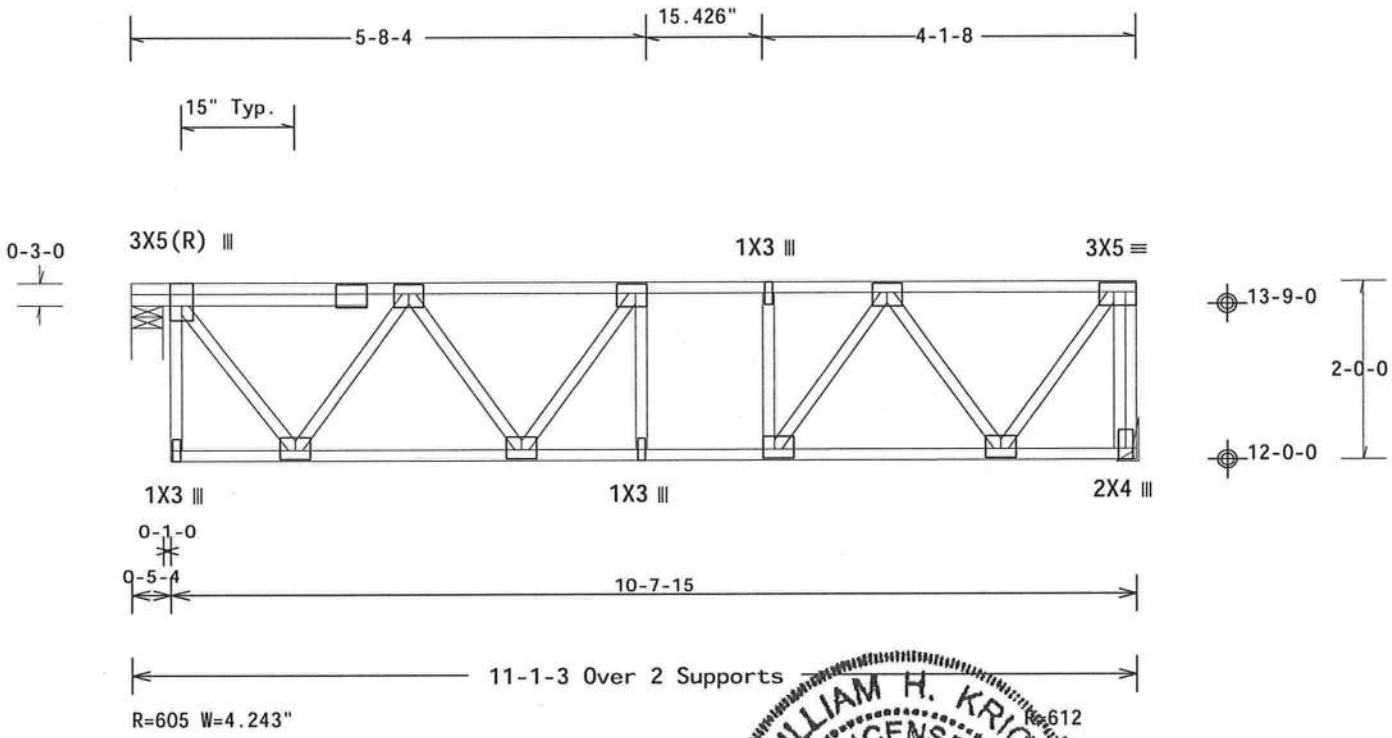

Note: All Plates Are 3X4 Except As Shown.

Design Crit: FBC2010Res/TPI-2007(STD)

PLT TYP. Wave

FT/RT=12%(0%)/10(0) 10.03.11.0209.19 QTY:1 FL/-/5/-/-/R/- Scale =.5"/Ft.

ALPINE
ITW Building Components Group Inc.
Haines City, FL 33844
FL COA #0 278

WARNING READ AND FOLLOW ALL NOTES ON THIS SHEET!
IMPORTANT FURNISH THIS DESIGN TO ALL CONTRACTORS INCLUDING INSTALLERS.

Trusses require extreme care in fabricating, handling, shipping, installing and bracing. Refer to and follow the latest edition of BCSI (Building Component Safety Information, by TPI and WTCA) for safety practices prior to performing these functions. Installers shall provide temporary bracing per BCSI. Unless noted otherwise, top chord shall have properly attached structural sheathing and bottom chord shall have a properly attached rigid ceiling. Locations shown for permanent lateral restraint of webs shall have bracing installed per BCSI sections B3, B7 or B10, as applicable.

ITW Building Components Group Inc. (ITWBCG) shall not be responsible for any deviation from this design, any failure to build the truss in conformance with ANSI/TPI 1, or for handling, shipping, installation and bracing of trusses. Apply plates to each face of truss and position as shown above and on the Joint Details, unless noted otherwise. Refer to drawings 160A-Z for standard plate positions. A seal on this drawing or cover page listing this drawing, indicates acceptance of professional engineering responsibility solely for the design shown. The suitability and use of this design for any structure is the responsibility of the Building Designer per ANSI/TPI 1 Sec.2. For more information see: This job's general notes page; ITW-BCG: www.itwbcg.com; TPI: www.tpinst.org; WTCA: www.sbcindustry.com; ICC: www.iccsafe.org

WILLIAM H. KRICK LICENSE No. 70861 STATE OF FLORIDA PROFESSIONAL ENGINEER
01/22/2013

TC LL	40.0 PSF	REF	R9114- 81532
TC DL	10.0 PSF	DATE	01/21/13
BC DL	5.0 PSF	DRW	HCUSR9114 13021247
BC LL	0.0 PSF	HC-ENG	JB/AP
TOT.LD.	55.0 PSF	SEQN-	46822
DUR.FAC.	1.00	FROM	SDY
SPACING	24.0"	JREF-	1UT39114Z03

(120912F--Anderson Truss Co. Patel Residence -- Lot 1 Hills Of Windsor , ** - F53)

Top chord 4x2 SP_#1_12A
Bot chord 4x2 SP_#1_12A
Webs 4x2 SP_#3__12A

Lumber grades designated with "12A" use design values approved 1/5/2012 by ALSC.

Truss must be installed as shown with top chord up.

See detail STRBRIBR0211 for bracing and bridging recommendations.

(H1) = (J) Hanger not calculated Unavailable supporting member.

Deflection meets L/360 live and L/240 total load. Creep increase factor for dead load is 1.50.

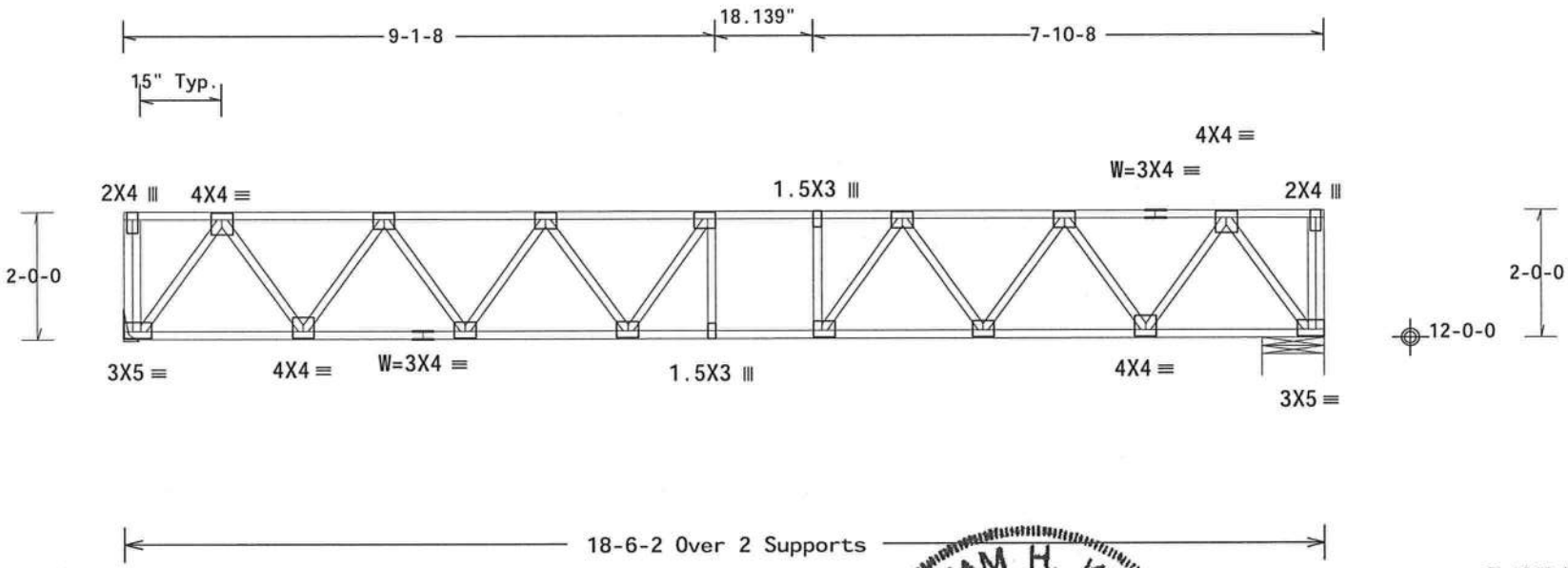

R=1018
H=H1

R=1018 W=11.5"

Note: All Plates Are 3X4 Except As Shown.

Design Crit: FBC2010Res/TPI-2007(STD)

PLT TYP. Wave

FT/RT=12%(0%)/10(0) 10.03.11.0209.19 QTY:8 FL/-/5/-/-/R/- Scale =.375"/Ft.

WILLIAM H. KRICK LICENSE No. 70861 STATE OF FLORIDA PROFESSIONAL ENGINEER

01/22/2013

ALPINE
ITW Building Components Group Inc.
Haines City, FL 33844
FL COA #0 278

WARNING READ AND FOLLOW ALL NOTES ON THIS SHEET!
IMPORTANT FURNISH THIS DESIGN TO ALL CONTRACTORS INCLUDING INSTALLERS.

Trusses require extreme care in fabricating, handling, shipping, installing and bracing. Refer to and follow the latest edition of BCSI (Building Component Safety Information, by TPI and WTCA) for safety practices prior to performing these functions. Installers shall provide temporary bracing per BCSI. Unless noted otherwise, top chord shall have properly attached structural sheathing and bottom chord shall have a properly attached rigid ceiling. Locations shown for permanent lateral restraint of webs shall have bracing installed per BCSI sections B3, B7 or B10, as applicable.

ITW Building Components Group Inc. (ITWBCG) shall not be responsible for any deviation from this design, any failure to build the truss in conformance with ANSI/TPI 1, or for handling, shipping, installation and bracing of trusses. Apply plates to each face of truss and position as shown above and on the Joint Details, unless noted otherwise. Refer to drawings 160A-Z for standard plate positions. A seal on this drawing or cover page listing this drawing, indicates acceptance of professional engineering responsibility solely for the design shown. The suitability and use of this design for any structure is the responsibility of the Building Designer per ANSI/TPI 1 Sec.2. For more information see: This job's general notes page; ITW-BCG: www.itwbcg.com; TPI: www.tpinst.org; WTCA: www.sbcindustry.com; ICC: www.iccsafe.org

TC LL	40.0 PSF	REF	R9114- 81533
TC DL	10.0 PSF	DATE	01/21/13
BC DL	5.0 PSF	DRW	HCUSR9114 13021258
BC LL	0.0 PSF	HC-ENG	JB/AP
TOT.LD.	55.0 PSF	SEQN-	46823
DUR.FAC.	1.00	FROM	SDY
SPACING	24.0"	JREF-	1UT39114Z03

(120912F--Anderson Truss Co. Patel Residence -- Lot 1 Hills Of Windsor , ** - F54)

Top chord 4x2 SP_#1_12A
Bot chord 4x2 SP_#1_12A
Webs 4x2 SP_#3__12A

Lumber grades designated with "12A" use design values approved 1/5/2012 by ALSC.

Deflection meets L/360 live and L/240 total load. Creep increase factor for dead load is 1.50.

Truss must be installed as shown with top chord up.

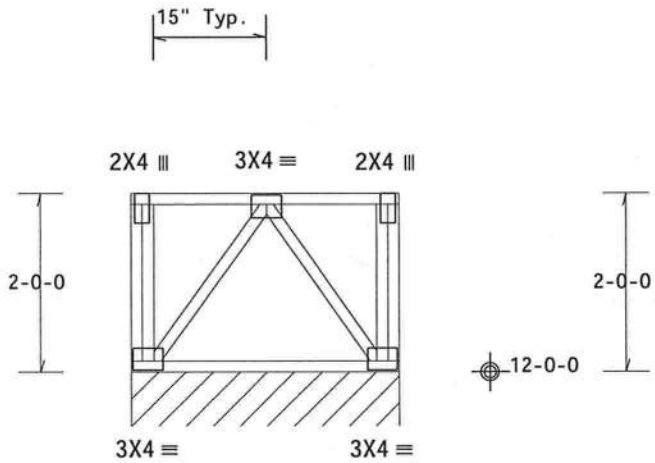

R=110 PLF W=2-11-8

Design Crit: FBC2010Res/TPI-2007(STD)
FT/RT=12%(0%)/10(0) 10.03.11.0809.19 QTY:1

PLT TYP. Wave

FL/-/5/-/-/R/-

Scale =.5"/Ft.

ALPINE
ITW Building Components Group Inc.
Haines City, FL 33844
FL COA #0 278

WARNING READ AND FOLLOW ALL NOTES ON THIS SHEET!
IMPORTANT FURNISH THIS DESIGN TO ALL CONTRACTORS INCLUDING INSTALLERS.

Trusses require extreme care in fabricating, handling, shipping, installing and bracing. Refer to and follow the latest edition of BCSI (Building Component Safety Information, by TPI and WTCA) for safety practices prior to performing these functions. Installers shall provide temporary bracing per BCSI. Unless noted otherwise, top chord shall have properly attached structural sheathing and bottom chord shall have a properly attached rigid ceiling. Locations shown for permanent lateral restraint of webs shall have bracing installed per BCSI sections B3, B7 or B10, as applicable.

ITW Building Components Group Inc. (ITWBCG) shall not be responsible for any deviation from this design, any failure to build the truss in conformance with ANSI/TPI 1, or for handling, shipping, installation and bracing of trusses. Apply plates to each face of truss and position as shown above and on the Joint Details, unless noted otherwise. Refer to drawings 160A-Z for standard plate positions. A seal on this drawing or cover page listing this drawing, indicates acceptance of professional engineering responsibility solely for the design shown. The suitability and use of this design for any structure is the responsibility of the Building Designer per ANSI/TPI 1 Sec.2. For more information see: This job's general notes page; ITW-BCG: www.itwbcg.com; TPI: www.tpinst.org; WTCA: www.sbcindustry.com; ICC: www.iccsafe.org

WILLIAM H. KRICK
LICENSE
No. 70861
STATE OF FLORIDA
PROFESSIONAL ENGINEER
01/22/2013

TC LL	40.0 PSF	REF	R9114- 81534
TC DL	10.0 PSF	DATE	01/21/13
BC DL	5.0 PSF	DRW	HCUSR9114 13021248
BC LL	0.0 PSF	HC-ENG	JB/AP
TOT.LD.	55.0 PSF	SEQN-	46824
DUR.FAC.	1.00	FROM	SDY
SPACING	24.0"	JREF-	1UT39114Z03

(120912F--Anderson Truss Co. Patel Residence -- Lot 1 Hills Of Windsor , ** - F55)

Top chord 4x2 SP_#1_12A
Bot chord 4x2 SP_#1_12A
Webs 4x2 SP_#3__12A

Lumber grades designated with "12A" use design values approved 1/5/2012 by ALSC.

Truss must be installed as shown with top chord up.

See detail STRBRIBR0211 for bracing and bridging recommendations.

(H1) = (J) Hanger not calculated Unavailable supporting member.

Deflection meets L/360 live and L/240 total load. Creep increase factor for dead load is 1.50.

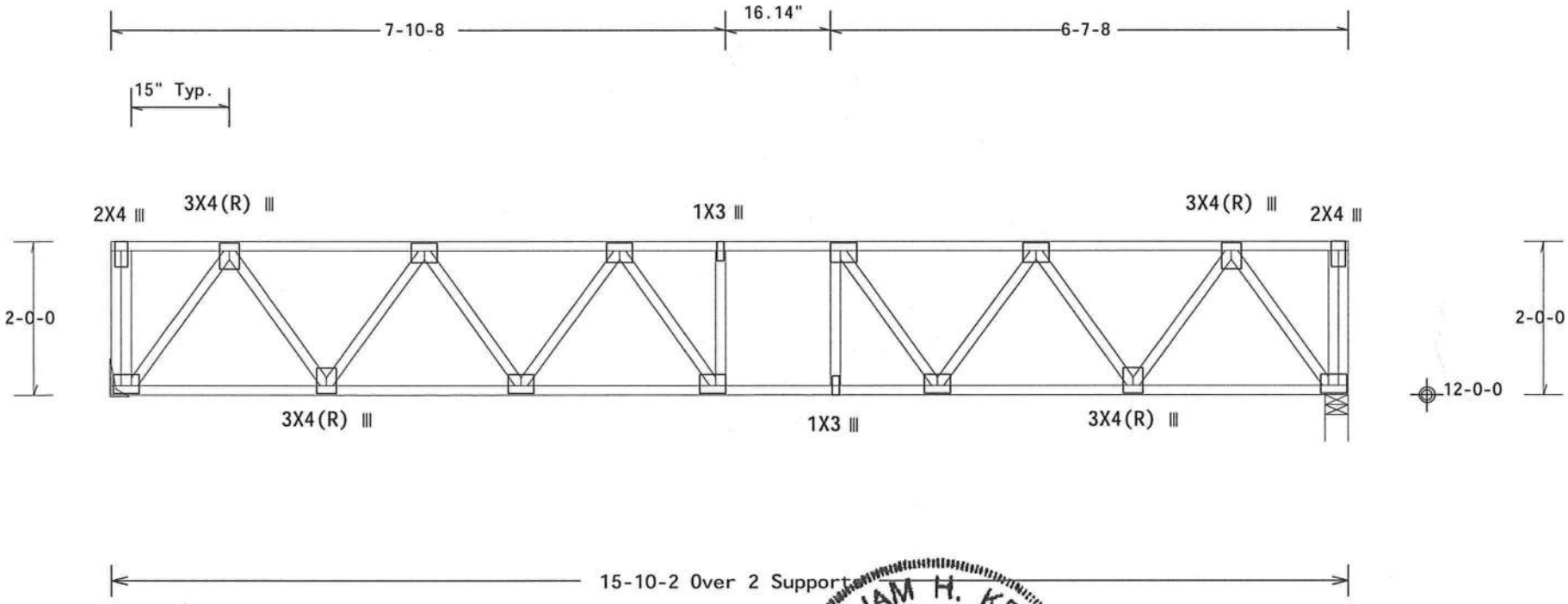

Note: All Plates Are 3X4 Except As Shown.

Design Crit: FBC2010Res/TPI-2007(STD)

PLT TYP. Wave

FT/RT=12%(0%)/10(0) 10.03.11.0209.19 QTY: 1 FL/-/5/-/-/R/- Scale =.5"/Ft.

WILLIAM H. KRICK LICENSE No. 70861 STATE OF FLORIDA PROFESSIONAL ENGINEER 01/22/2013

ALPINE
ITW Building Components Group Inc.
Haines City, FL 33844
FL COA #0 278

WARNING READ AND FOLLOW ALL NOTES ON THIS SHEET!
IMPORTANT FURNISH THIS DESIGN TO ALL CONTRACTORS INCLUDING INSTALLERS.

Trusses require extreme care in fabricating, handling, shipping, installing and bracing. Refer to and follow the latest edition of BCSI (Building Component Safety Information, by TPI and WTCA) for safety practices prior to performing these functions. Installers shall provide temporary bracing per BCSI. Unless noted otherwise, top chord shall have properly attached structural sheathing and bottom chord shall have a properly attached rigid ceiling. Locations shown for permanent lateral restraint of webs shall have bracing installed per BCSI sections B3, B7 or B10, as applicable.

ITW Building Components Group Inc. (ITWBCG) shall not be responsible for any deviation from this design, any failure to build the truss in conformance with ANSI/TPI 1, or for handling, shipping, installation and bracing of trusses. Apply plates to each face of truss and position as shown above and on the Joint Details, unless noted otherwise. Refer to drawings 160A-Z for standard plate positions. A seal on this drawing or cover page listing this drawing, indicates acceptance of professional engineering responsibility solely for the design shown. The suitability and use of this design for any structure is the responsibility of the Building Designer per ANSI/TPI 1 Sec.2. For more information see: This job's general notes page; ITW-BCG: www.itwbcg.com; TPI: www.tpinst.org; WTCA: www.sbcindustry.com; ICC: www.iccsafe.org

TC LL	40.0 PSF	REF	R9114- 81535
TC DL	10.0 PSF	DATE	01/21/13
BC DL	5.0 PSF	DRW	HCUSR9114 13021245
BC LL	0.0 PSF	HC-ENG	JB/AP
TOT.LD.	55.0 PSF	SEQN-	46825
DUR.FAC.	1.00	FROM	SDY
SPACING	24.0"	JREF-	1UT39114Z03

THIS DWG PREPARED FROM COMPUTER INPUT (LOADS & DIMENSIONS) SUBMITTED BY TRUSS MFR.

Top chord 4x2 SP_#1_12A
Bot chord 4x2 SP_#1_12A
Webs 4x2 SP_#3__12A

Lumber grades designated with "12A" use design values approved 1/5/2012 by ALSC.

See detail STRBRIBR0211 for bracing and bridging recommendations.

Deflection meets L/360 live and L/240 total load. Creep increase factor for dead load is 1.50.

Truss must be installed as shown with top chord up.

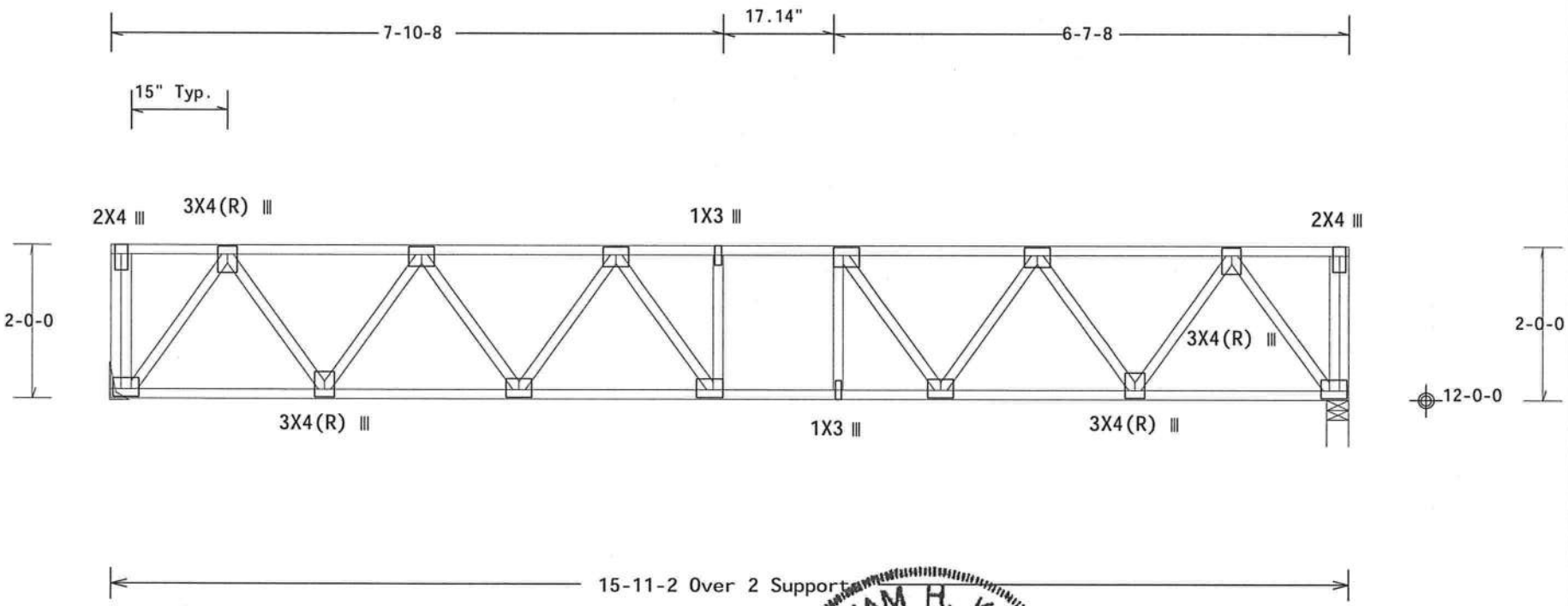

Note: All Plates Are 3X4 Except As Shown.

Design Crit: FBC2010Res/TPI-2007(STD)

PLT TYP. Wave

FT/RT=12%(0%)/10(0) 10.03.11.0209.19 QTY: 4 FL/-/5/-/-/R/- Scale =.5"/Ft.

WILLIAM H. KRICK LICENSE No. 70861 STATE OF FLORIDA PROFESSIONAL ENGINEER

01/22/2013

ALPINE
ITW Building Components Group Inc.
Haines City, FL 33844
FL COA #0 278

WARNING READ AND FOLLOW ALL NOTES ON THIS SHEET!
IMPORTANT FURNISH THIS DESIGN TO ALL CONTRACTORS INCLUDING INSTALLERS.

Trusses require extreme care in fabricating, handling, shipping, installing and bracing. Refer to and follow the latest edition of BCSI (Building Component Safety Information, by TPI and WTCA) for safety practices prior to performing these functions. Installers shall provide temporary bracing per BCSI. Unless noted otherwise, top chord shall have properly attached structural sheathing and bottom chord shall have a properly attached rigid ceiling. Locations shown for permanent lateral restraint of webs shall have bracing installed per BCSI sections B3, B7 or B10, as applicable.

ITW Building Components Group Inc. (ITWBCG) shall not be responsible for any deviation from this design, any failure to build the truss in conformance with ANSI/TPI 1, or for handling, shipping, installation and bracing of trusses. Apply plates to each face of truss and position as shown above and on the Joint Details, unless noted otherwise. Refer to drawings 160A-Z for standard plate positions. A seal on this drawing or cover page listing this drawing, indicates acceptance of professional engineering responsibility solely for the design shown. The suitability and use of this design for any structure is the responsibility of the Building Designer per ANSI/TPI 1 Sec.2. For more information see: This job's general notes page; ITW-BCG: www.itwbcg.com; TPI: www.tpinst.org; WTCA: www.sbcindustry.com; ICC: www.iccsafe.org

TC LL	40.0 PSF	REF	R9114- 81536
TC DL	10.0 PSF	DATE	01/21/13
BC DL	5.0 PSF	DRW	HCUSR9114 13021226
BC LL	0.0 PSF	HC-ENG	JB/AP
TOT.LD.	55.0 PSF	SEQN-	46826
DUR.FAC.	1.00	FROM	SDY
SPACING	24.0"	JREF-	1UT39114Z03

THIS DWG PREPARED FROM COMPUTER INPUT (LOADS & DIMENSIONS) SUBMITTED BY TRUSS MFR.

(120912F--Anderson Truss Co. Patel Residence -- Lot 1 Hills Of Windsor , ** - F57)

Top chord 4x2 SP_#1_12A
Bot chord 4x2 SP_#1_12A
Webs 4x2 SP_#3__12A

Lumber grades designated with "12A" use design values approved 1/5/2012 by ALSC.

See detail STRBRIBR0211 for bracing and bridging recommendations.

Deflection meets L/360 live and L/240 total load. Creep increase factor for dead load is 1.50.

Truss must be installed as shown with top chord up.

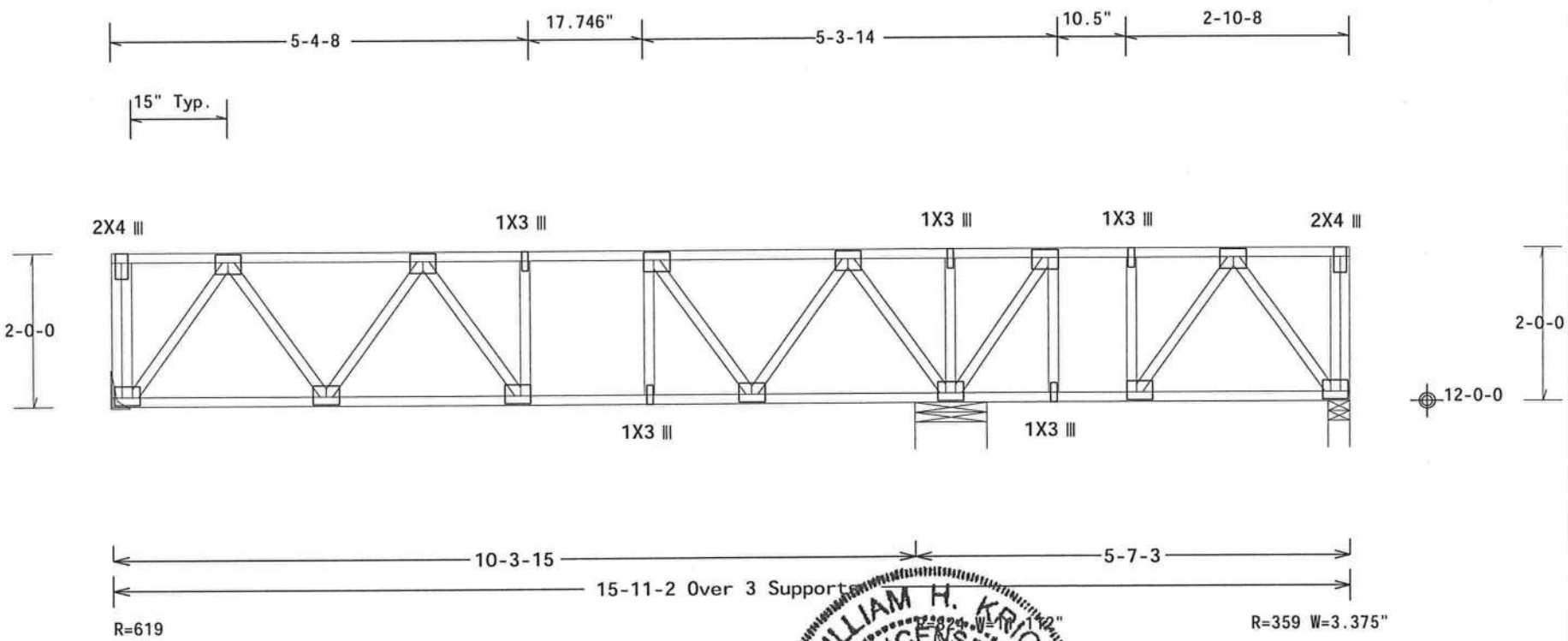

Note: All Plates Are 3X4 Except As Shown.

Design Crit: FBC2010Res/TPI-2007(STD)

PLT TYP. Wave

FT/RT=12%(0%)/10(0)

10.03.11.0809.19 QTY: 1

FL/-/5/-/-/R/-

Scale =.5"/Ft.

WILLIAM H. KRICK LICENSE No. 70861 STATE OF FLORIDA PROFESSIONAL ENGINEER

01/22/2013

ALPINE
ITW Building Components Group Inc.
Haines City, FL 33844
FL COA #0 278

WARNING READ AND FOLLOW ALL NOTES ON THIS SHEET!
IMPORTANT FURNISH THIS DESIGN TO ALL CONTRACTORS INCLUDING INSTALLERS.

Trusses require extreme care in fabricating, handling, shipping, installing and bracing. Refer to and follow the latest edition of BCSI (Building Component Safety Information, by TPI and WTCA) for safety practices prior to performing these functions. Installers shall provide temporary bracing per BCSI. Unless noted otherwise, top chord shall have properly attached structural sheathing and bottom chord shall have a properly attached rigid ceiling. Locations shown for permanent lateral restraint of webs shall have bracing installed per BCSI sections B3, B7 or B10, as applicable.

ITW Building Components Group Inc. (ITWBCG) shall not be responsible for any deviation from this design, any failure to build the truss in conformance with ANSI/TPI 1, or for handling, shipping, installation and bracing of trusses. Apply plates to each face of truss and position as shown above and on the Joint Details, unless noted otherwise. Refer to drawings 160A-Z for standard plate positions. A seal on this drawing or cover page listing this drawing, indicates acceptance of professional engineering responsibility solely for the design shown. The suitability and use of this design for any structure is the responsibility of the Building Designer per ANSI/TPI 1 Sec.2. For more information see: This job's general notes page; ITW-BCG: www.itwbcg.com; TPI: www.tpinst.org; WTCA: www.sbcindustry.com; ICC: www.iccsafe.org

TC LL	40.0 PSF	REF	R9114- 81537
TC DL	10.0 PSF	DATE	01/22/13
BC DL	5.0 PSF	DRW	HCUSR9114 13022205
BC LL	0.0 PSF	HC-ENG	WHK/WHK
TOT.LD.	55.0 PSF	SEQN-	97229
DUR.FAC.	1.00	FROM	SDY
SPACING	24.0"	JREF-	1UT39114Z03

(120912F--Anderson Truss Co. Patel Residence -- Lot 1 Hills Of Windsor , ** - F58)

Top chord 4x2 SP_#1_12A
Bot chord 4x2 SP_#1_12A
Webs 4x2 SP_#3__12A

Lumber grades designated with "12A" use design values approved 1/5/2012 by ALSC.

See detail STRBRIBR0211 for bracing and bridging recommendations.

Deflection meets L/360 live and L/240 total load. Creep increase factor for dead load is 1.50.

Truss must be installed as shown with top chord up.

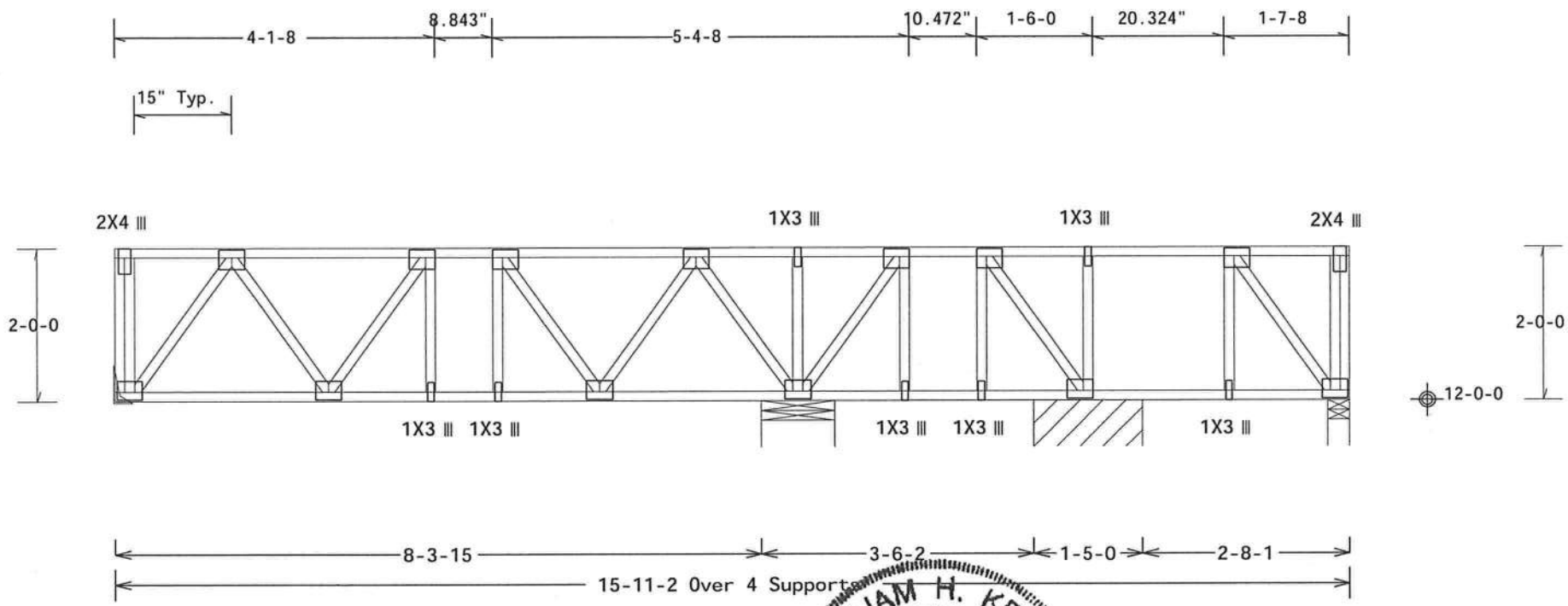

Note: All Plates Are 3X4 Except As Shown.

Design Crit: FBC2010Res/TPI-2007(STD)

PLT TYP. Wave

FT/RT=12%(0%)/10(0)

10.03.11.0209.19 QTY: 1

FL/-/5/-/-/R/-

Scale =.5"/Ft.

WILLIAM H. KRICK LICENSE No. 70861 STATE OF FLORIDA PROFESSIONAL ENGINEER

01/22/2013

ALPINE

ITW Building Components Group Inc.

Haines City, FL 33844
FL COA #0 278

WARNING READ AND FOLLOW ALL NOTES ON THIS SHEET!
IMPORTANT FURNISH THIS DESIGN TO ALL CONTRACTORS INCLUDING INSTALLERS.

Trusses require extreme care in fabricating, handling, shipping, installing and bracing. Refer to and follow the latest edition of BCSI (Building Component Safety Information, by TPI and WTCA) for general practices prior to performing these functions. Installers shall provide temporary bracing per BCSI. Unless noted otherwise, top chord shall have properly attached structural sheathing and bottom chord shall have a properly attached rigid ceiling. Locations shown for permanent lateral restraint of webs shall have bracing installed per BCSI sections B3, B7 or B10, as applicable.

ITW Building Components Group Inc. (ITWBCG) shall not be responsible for any deviation from this design, any failure to build the truss in conformance with ANSI/TPI 1, or for handling, shipping, installation and bracing of trusses. Apply plates to each face of truss and position as shown above and on the Joint Details, unless noted otherwise. Refer to drawings 160A-Z for standard plate positions. A seal on this drawing or cover page listing this drawing, indicates acceptance of professional engineering responsibility solely for the design shown. The suitability and use of this design for any structure is the responsibility of the Building Designer per ANSI/TPI 1 Sec.2. For more information see: This job's general notes page; ITW-BCG: www.itwbcg.com; TPI: www.tpinst.org; WTCA: www.sbcindustry.com; ICC: www.iccsafe.org

TC LL	40.0 PSF	REF	R9114- 81538
TC DL	10.0 PSF	DATE	01/22/13
BC DL	5.0 PSF	DRW	HCUSR9114 13022206
BC LL	0.0 PSF	HC-ENG	WHK/WHK
TOT.LD.	55.0 PSF	SEQN-	97230
DUR.FAC.	1.00	FROM	SDY
SPACING	24.0"	JREF-	1UT39114Z03

(120912F--Anderson Truss Co. Patel Residence -- Lot 1 Hills Of Windsor , ** - F59)

Top chord 4x2 SP_#1_12A
Bot chord 4x2 SP_#1_12A
Webs 4x2 SP_#3__12A

Lumber grades designated with "12A" use design values approved 1/5/2012 by ALSC.

See detail STRBRIBR0211 for bracing and bridging recommendations.

Deflection meets L/360 live and L/240 total load. Creep increase factor for dead load is 1.50.

Truss must be installed as shown with top chord up.

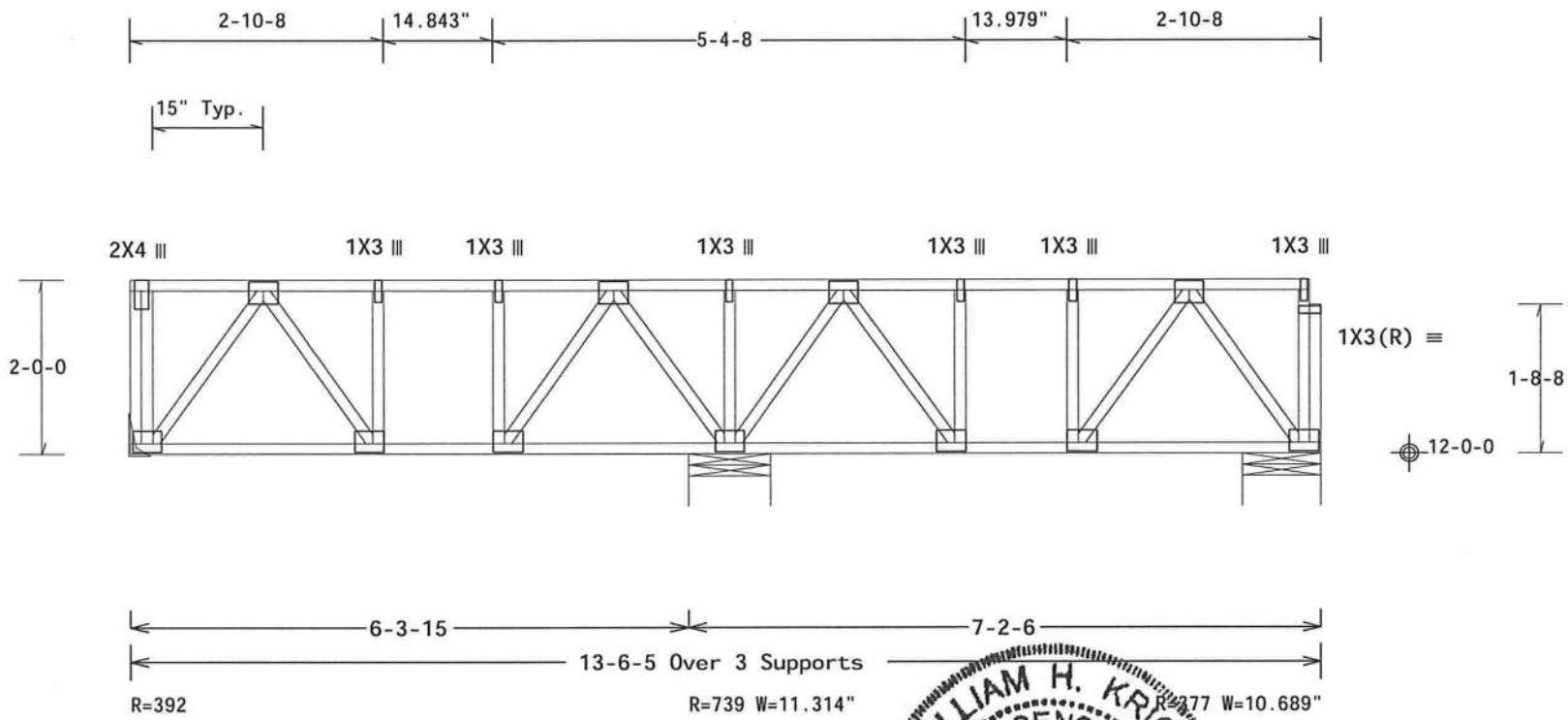

Note: All Plates Are 3X4 Except As Shown.

Design Crit: FBC2010Res/TPI-2007(STD)

PLT TYP. Wave

FT/RT=12%(0%)/10(0) 10.03.11.0209.19 QTY:1 FL/-/5/-/-/R/- Scale =.5"/Ft.

WILLIAM H. KRICK LICENSE No. 70861 STATE OF FLORIDA PROFESSIONAL ENGINEER

01/22/2013

ALPINE
ITW Building Components Group Inc.
Haines City, FL 33844
FL COA #0 278

WARNING READ AND FOLLOW ALL NOTES ON THIS SHEET!
IMPORTANT FURNISH THIS DESIGN TO ALL CONTRACTORS INCLUDING INSTALLERS.

Trusses require extreme care in fabricating, handling, shipping, installing and bracing. Refer to and follow the latest edition of BCSI (Building Component Safety Information, by TPI and WTCA) for safety practices prior to performing these functions. Installers shall provide temporary bracing per BCSI. Unless noted otherwise, top chord shall have properly attached structural sheathing and bottom chord shall have a properly attached rigid ceiling. Locations shown for permanent lateral restraint of webs shall have bracing installed per BCSI sections B3, B7 or B10, as applicable.

ITW Building Components Group Inc. (ITWBCG) shall not be responsible for any deviation from this design, any failure to build the truss in conformance with ANSI/TPI 1, or for handling, shipping, installation and bracing of trusses. Apply plates to each face of truss and position as shown above and on the Joint Details, unless noted otherwise. Refer to drawings 160A-Z for standard plate positions. A seal on this drawing or cover page listing this drawing, indicates acceptance of professional engineering responsibility solely for the design shown. The suitability and use of this design for any structure is the responsibility of the Building Designer per ANSI/TPI 1 Sec.2. For more information see: This job's general notes page: ITW-BCG: www.itwbcg.com; TPI: www.tpinst.org; WTCA: www.sbcindustry.com; ICC: www.iccsafe.org

TC LL	40.0 PSF	REF	R9114- 81539
TC DL	10.0 PSF	DATE	01/22/13
BC DL	5.0 PSF	DRW	HCUSR9114 13022207
BC LL	0.0 PSF	HC-ENG	WHK/WHK
TOT.LD.	55.0 PSF	SEQN-	97231
DUR.FAC.	1.00	FROM	SDY
SPACING	24.0"	JREF-	1UT39114Z03

(120912F--Anderson Truss Co. Patel Residence -- Lot 1 Hills Of Windsor , ** - F60)

Top chord 4x2 SP_#1_12A
Bot chord 4x2 SP_#1_12A
Webs 4x2 SP_#3__12A

Lumber grades designated with "12A" use design values approved 1/5/2012 by ALSC.

See detail STRBRIBR0211 for bracing and bridging recommendations.

Deflection meets L/360 live and L/240 total load. Creep increase factor for dead load is 1.50.

Truss must be installed as shown with top chord up.

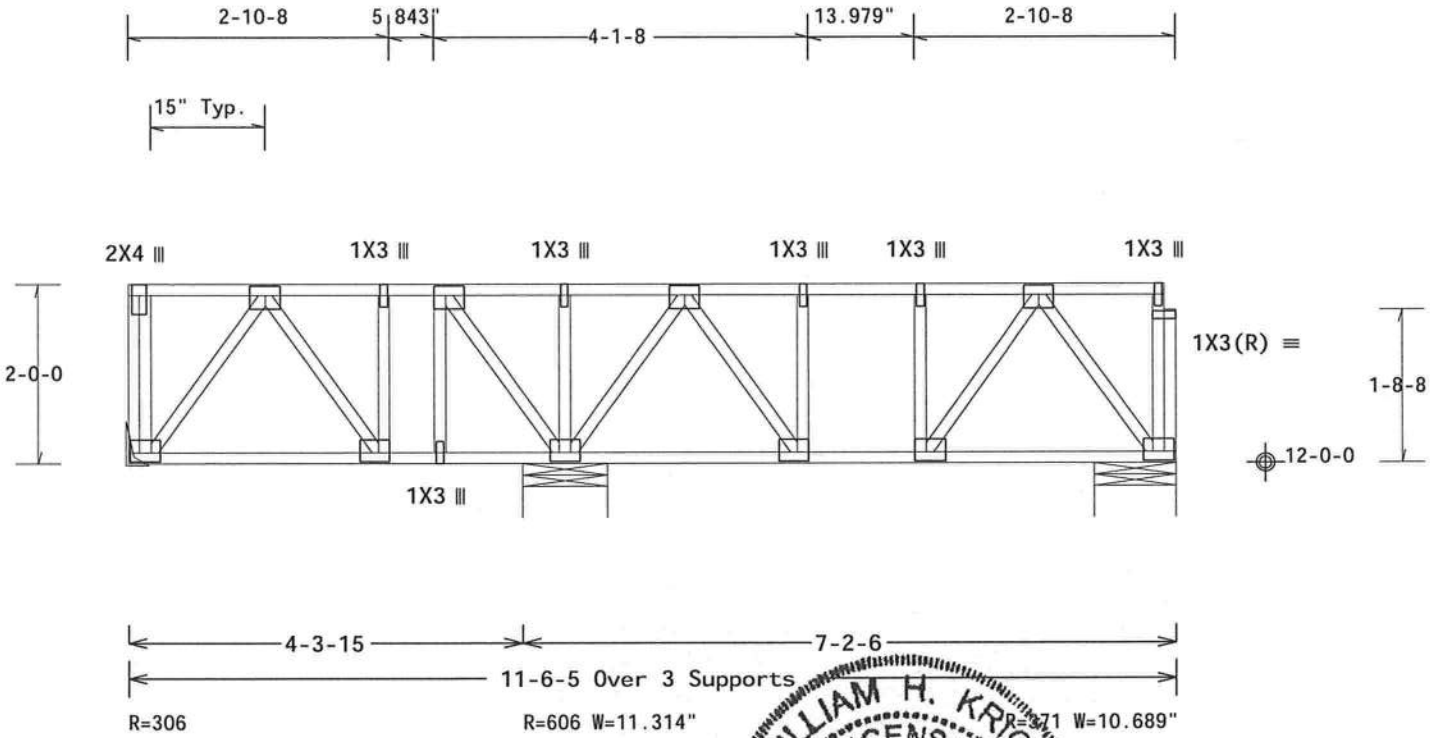

Note: All Plates Are 3X4 Except As Shown.

Design Crit: FBC2010Res/TPI-2007(STD)

PLT TYP. Wave

FT/RT=12%(0%)/10(0) 10.03.11.0309.19 QTY 1 FL/-/5/-/-/R/- Scale =.5"/Ft.

WILLIAM H. KRICK LICENSE No. 70861 STATE OF FLORIDA PROFESSIONAL ENGINEER

01/22/2013

ALPINE
ITW Building Components Group Inc.
Haines City, FL 33844
FL COA #0 278

WARNING READ AND FOLLOW ALL NOTES ON THIS SHEET!
IMPORTANT FURNISH THIS DESIGN TO ALL CONTRACTORS INCLUDING INSTALLERS.

Trusses require extreme care in fabricating, handling, shipping, installing and bracing. Refer to and follow the latest edition of BCSI (Building Component Safety Information, by TPI and WTCA) for safety practices prior to performing these functions. Installers shall provide temporary bracing per BCSI. Unless noted otherwise, top chord shall have properly attached structural sheathing and bottom chord shall have a properly attached rigid ceiling. Locations shown for permanent lateral restraint of webs shall have bracing installed per BCSI sections B3, B7 or B10, as applicable.

ITW Building Components Group Inc. (ITWBCG) shall not be responsible for any deviation from this design, any failure to build the truss in conformance with ANSI/TPI 1, or for handling, shipping, installation and bracing of trusses. Apply plates to each face of truss and position as shown above and on the Joint Details, unless noted otherwise. Refer to drawings 160A-Z for standard plate positions. A seal on this drawing or cover page listing this drawing, indicates acceptance of professional engineering responsibility solely for the design shown. The suitability and use of this design for any structure is the responsibility of the Building Designer per ANSI/TPI 1 Sec.2. For more information see: This job's general notes page: ITW-BCG: www.itwbcg.com; TPI: www.tpinst.org; WTCA: www.sbcindustry.com; ICC: www.iccsafe.org

TC LL	40.0 PSF	REF	R9114- 81540
TC DL	10.0 PSF	DATE	01/22/13
BC DL	5.0 PSF	DRW	HCUSR9114 13022208
BC LL	0.0 PSF	HC-ENG	WHK/WHK
TOT.LD.	55.0 PSF	SEQN-	97232
DUR.FAC.	1.00	FROM	SDY
SPACING	24.0"	JREF-	1UT39114Z03

THIS DWG PREPARED FROM COMPUTER INPUT (LOADS & DIMENSIONS) SUBMITTED BY TRUSS MFR.

(120912F--Anderson Truss Co. Patel Residence -- Lot 1 Hills Of Windsor , ** - F61)

Top chord 4x2 SP_#1_12A
Bot chord 4x2 SP_#1_12A
Webs 4x2 SP_#3__12A

Lumber grades designated with "12A" use design values approved 1/5/2012 by ALSC.

Deflection meets L/360 live and L/240 total load. Creep increase factor for dead load is 1.50.

Truss must be installed as shown with top chord up.

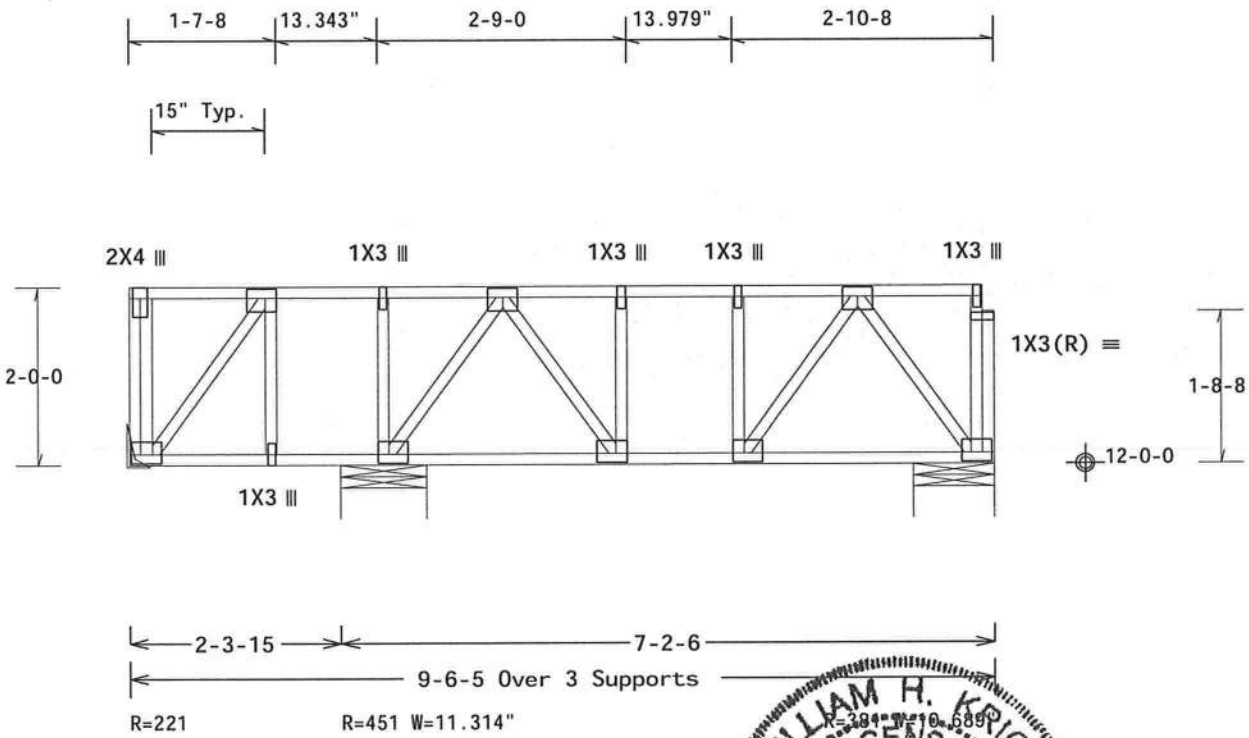

Note: All Plates Are 3X4 Except As Shown.

Design Crit: FBC2010Res/TPI-2007(STD)

PLT TYP. Wave FT/RT=12%(0%)/10(0) ID.03.11.0209.19 QTY: 1 FL/-/5/-/-/R/- Scale =.5"/Ft.

WILLIAM H. KRICK LICENSE No. 70861 STATE OF FLORIDA PROFESSIONAL ENGINEER

01/22/2013

ALPINE
ITW Building Components Group Inc.
Haines City, FL 33844
FL COA #0 278

WARNING READ AND FOLLOW ALL NOTES ON THIS SHEET!
IMPORTANT FURNISH THIS DESIGN TO ALL CONTRACTORS INCLUDING INSTALLERS.

Trusses require extreme care in fabricating, handling, shipping, installing and bracing. Refer to and follow the latest edition of BCSI (Building Component Safety Information, by TPI and WTCA) for safety practices prior to performing these functions. Installers shall provide temporary bracing per BCSI. Unless noted otherwise, top chord shall have properly attached structural sheathing and bottom chord shall have a properly attached rigid ceiling. Locations shown for permanent lateral restraint of webs shall have bracing installed per BCSI sections B3, B7 or B10, as applicable.

ITW Building Components Group Inc. (ITWBCG) shall not be responsible for any deviation from this design, any failure to build the truss in conformance with ANSI/TPI 1, or for handling, shipping, installation and bracing of trusses. Apply plates to each face of truss and position as shown above and on the Joint Details, unless noted otherwise. Refer to drawings 160A-Z for standard plate positions. A seal on this drawing or cover page listing this drawing, indicates acceptance of professional engineering responsibility solely for the design shown. The suitability and use of this design for any structure is the responsibility of the Building Designer per ANSI/TPI 1 Sec.2. For more information see: This job's general notes page; ITW-BCG: www.itwbcg.com; TPI: www.tpinst.org; WTCA: www.sbcindustry.com; ICC: www.iccsafe.org

TC LL	40.0 PSF	REF	R9114- 81541
TC DL	10.0 PSF	DATE	01/22/13
BC DL	5.0 PSF	DRW	HCUSR9114 13022209
BC LL	0.0 PSF	HC-ENG	WHK/WHK
TOT.LD.	55.0 PSF	SEQN-	97233
DUR.FAC.	1.00	FROM	SDY
SPACING	24.0"	JREF-	1UT39114Z03

THIS DWG PREPARED FROM COMPUTER INPUT (LOADS & DIMENSIONS) SUBMITTED BY TRUSS MFR.

(120912F--Anderson Truss Co. Patel Residence -- Lot 1 Hills Of Windsor , ** - F62)

Top chord 4x2 SP_#1_12A
Bot chord 4x2 SP_#1_12A
Webs 4x2 SP_#3__12A

Lumber grades designated with "12A" use design values approved 1/5/2012 by ALSC.

Deflection meets L/360 live and L/240 total load. Creep increase factor for dead load is 1.50.

Truss must be installed as shown with top chord up.

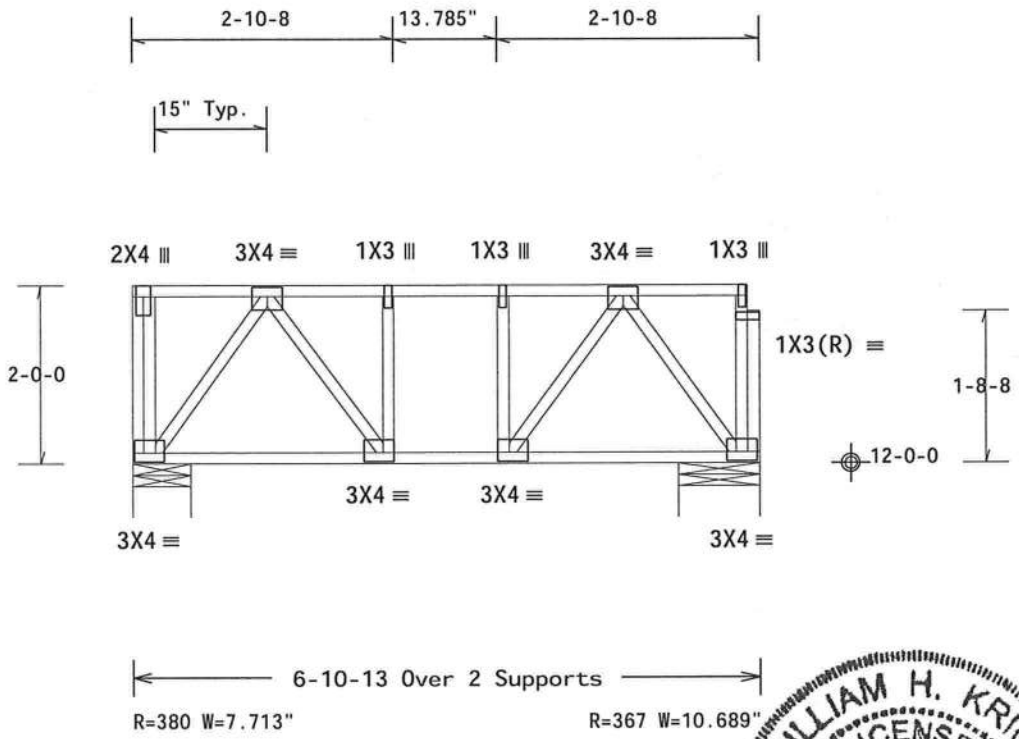

Design Crit: FBC2010Res/TPI-2007(STD)
FT/RT=12%(0%)/10(0)

10.03.11.0209.19 QTY 1

FL/-/5/-/-/R/-

Scale =.5"/Ft.

PLT TYP. Wave

WILLIAM H. KRICK LICENSE No. 70861 STATE OF FLORIDA PROFESSIONAL ENGINEER

01/22/2013

ALPINE
ITW Building Components Group Inc.
Haines City, FL 33844
FL COA #0 278

WARNING READ AND FOLLOW ALL NOTES ON THIS SHEET!
IMPORTANT FURNISH THIS DESIGN TO ALL CONTRACTORS INCLUDING INSTALLERS.

Trusses require extreme care in fabricating, handling, shipping, installing and bracing. Refer to and follow the latest edition of BCSI (Building Component Safety Information, by TPI and WTCA) for safety practices prior to performing these functions. Installers shall provide temporary bracing per BCSI. Unless noted otherwise, top chord shall have properly attached structural sheathing and bottom chord shall have a properly attached rigid ceiling. Locations shown for permanent lateral restraint of webs shall have bracing installed per BCSI sections B3, B7 or B10, as applicable.

ITW Building Components Group Inc. (ITWBCG) shall not be responsible for any deviation from this design, any failure to build the truss in conformance with ANSI/TPI 1, or for handling, shipping, installation and bracing of trusses. Apply plates to each face of truss and position as shown above and on the Joint Details, unless noted otherwise. Refer to drawings 160A-Z for standard plate positions. A seal on this drawing or cover page listing this drawing, indicates acceptance of professional engineering responsibility solely for the design shown. The suitability and use of this design for any structure is the responsibility of the Building Designer per ANSI/TPI 1 Sec.2. For more information see: This job's general notes page; ITW-BCG: www.itwbcg.com; TPI: www.tpinst.org; WTCA: www.sbcindustry.com; ICC: www.iccsafe.org

TC LL	40.0 PSF	REF	R9114- 81542
TC DL	10.0 PSF	DATE	01/21/13
BC DL	5.0 PSF	DRW	HCUSR9114 13021249
BC LL	0.0 PSF	HC-ENG	JB/AP
TOT.LD.	55.0 PSF	SEQN-	46832
DUR.FAC.	1.00	FROM	SDY
SPACING	24.0"	JREF-	1UT39114Z03

(120912F--Anderson Truss Co. Patel Residence -- Lot 1 Hills Of Windsor , ** - F63)

Top chord 4x2 SP_#1_12A
Bot chord 4x2 SP_#1_12A
Webs 4x2 SP_#3__12A

Lumber grades designated with "12A" use design values approved 1/5/2012 by ALSC.

(H1) = (J) Hanger not calculated (1)4x2 SP_#1_12A supporting member.

Deflection meets L/360 live and L/240 total load. Creep increase factor for dead load is 1.50.

Truss must be installed as shown with top chord up.

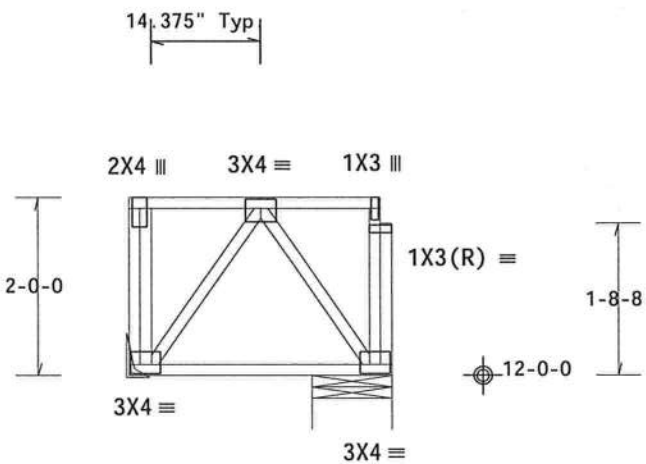

2-10-13 Over 2 Supports

R=160
H=H1 R=146 W=10.689"

Design Crit: FBC2010Res/TPI-2007(STD)
FT/RT=12%(0%)/10(0)

10.03.11.0209.19 QTY:1

FL/-/5/-/-/R/-

Scale =.5"/Ft.

PLT TYP. Wave

WILLIAM H. KRICK
LICENSE
No. 70861
STATE OF FLORIDA
PROFESSIONAL ENGINEER
01/22/2013

ALPINE
ITW Building Components Group Inc.
Haines City, FL 33844
FL COA #0 278

WARNING READ AND FOLLOW ALL NOTES ON THIS SHEET!
IMPORTANT FURNISH THIS DESIGN TO ALL CONTRACTORS INCLUDING INSTALLERS.

Trusses require extreme care in fabricating, handling, shipping, installing and bracing. Refer to and follow the latest edition of BCSI (Building Component Safety Information, by TPI and WTCA) for general practices prior to performing these functions. Installers shall provide temporary bracing per BCSI. Unless noted otherwise, top chord shall have properly attached structural sheathing and bottom chord shall have a properly attached rigid ceiling. Locations shown for permanent lateral restraint of webs shall have bracing installed per BCSI sections B3, B7 or B10, as applicable.

ITW Building Components Group Inc. (ITWBCG) shall not be responsible for any deviation from this design, any failure to build the truss in conformance with ANSI/TPI 1, or for handling, shipping, installation and bracing of trusses. Apply plates to each face of truss and position as shown above and on the Joint Details, unless noted otherwise. Refer to drawings 160A-Z for standard plate positions. A seal on this drawing or cover page listing this drawing, indicates acceptance of professional engineering responsibility solely for the design shown. The suitability and use of this design for any structure is the responsibility of the Building Designer per ANSI/TPI 1 Sec.2. For more information see: This job's general notes page; ITW-BCG: www.itwbcg.com; TPI: www.tpinst.org; WTCA: www.sbcindustry.com; ICC: www.iccsafe.org

TC LL	40.0 PSF	REF	R9114- 81543
TC DL	10.0 PSF	DATE	01/21/13
BC DL	5.0 PSF	DRW	HCUSR9114 13021250
BC LL	0.0 PSF	HC-ENG	JB/AP
TOT.LD.	55.0 PSF	SEQN-	46833
DUR.FAC.	1.00	FROM	SDY
SPACING	24.0"	JREF-	1UT39114Z03

(120912F--Anderson Truss Co. Patel Residence -- Lot 1 Hills Of Windsor , ** - F64)

Top chord 4x2 SP_#1_12A
Bot chord 4x2 SP_#1_12A
Webs 4x2 SP_#3__12A

Lumber grades designated with "12A" use design values approved 1/5/2012 by ALSC.

Truss must be installed as shown with top chord up.

Special loads
------(Lumber Dur.Fac.=1.00 / Plate Dur.Fac.=1.00)
TC- From 100 plf at 0.00 to 100 plf at 5.10
BC- From 10 plf at 0.00 to 10 plf at 5.23
TC- 160.41 lb Conc. Load at 3.09

Deflection meets L/360 live and L/240 total load. Creep increase factor for dead load is 1.50.

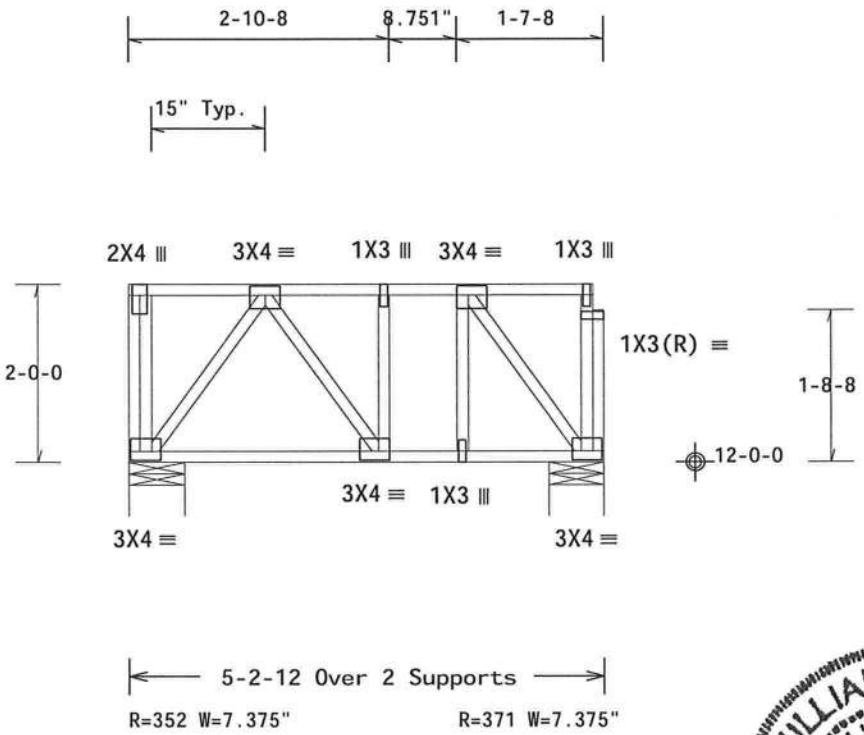

WILLIAM H. KRICK
LICENSE
No. 70861
STATE OF FLORIDA
PROFESSIONAL ENGINEER
01/22/2013

Design Crit: FBC2010Res/TPI-2007(STD)
FT/RT=12%(0%)/10(0) 10.03.11.02.09.19 QTY 1

PLT TYP. Wave

FL/-/5/-/-/R/- Scale =.5"/Ft.

ALPINE
ITW Building Components Group Inc.
Haines City, FL 33844
FL COA #0 278

WARNING READ AND FOLLOW ALL NOTES ON THIS SHEET!
IMPORTANT FURNISH THIS DESIGN TO ALL CONTRACTORS INCLUDING INSTALLERS.

Trusses require extreme care in fabricating, handling, shipping, installing and bracing. Refer to and follow the latest edition of BCSI (Building Component Safety Information, by TPI and WTCA) for general practices prior to performing these functions. Installers shall provide temporary bracing per BCSI. Unless noted otherwise, top chord shall have properly attached structural sheathing and bottom chord shall have a properly attached rigid ceiling. Locations shown for permanent lateral restraint of webs shall have bracing installed per BCSI sections B3, B7 or B10, as applicable.

ITW Building Components Group Inc. (ITWBCG) shall not be responsible for any deviation from this design, any failure to build the truss in conformance with ANSI/TPI 1, or for handling, shipping, installation & bracing of trusses. Apply plates to each face of truss and position as shown above and on the Joint Details, unless noted otherwise. Refer to drawings 160A-Z for standard plate positions. A seal on this drawing or cover page listing this drawing, indicates acceptance of professional engineering responsibility solely for the design shown. The suitability and use of this design for any structure is the responsibility of the Building Designer per ANSI/TPI 1 Sec.2. For more information see: This job's general notes page; ITW-BCG: www.itwbcg.com; TPI: www.tpinst.org; WTCA: www.sbcindustry.com; ICC: www.iccsafe.org

TC LL	40.0 PSF	REF	R9114- 81544
TC DL	10.0 PSF	DATE	01/21/13
BC DL	5.0 PSF	DRW	HCUSR9114 13021251
BC LL	0.0 PSF	HC-ENG	JB/AP
TOT.LD.	55.0 PSF	SEQN-	46858
DUR.FAC.	1.00	FROM	SDY
SPACING	24.0"	JREF-	1UT39114Z03

(120912F--Anderson Truss Co. Patel Residence -- Lot 1 Hills Of Windsor , ** - F65)

Top chord 4x2 SP_#1_12A
Bot chord 4x2 SP_#1_12A
Webs 4x2 SP_#3__12A

Lumber grades designated with "12A" use design values approved 1/5/2012 by ALSC.

Deflection meets L/360 live and L/240 total load. Creep increase factor for dead load is 1.50.

Truss must be installed as shown with top chord up.

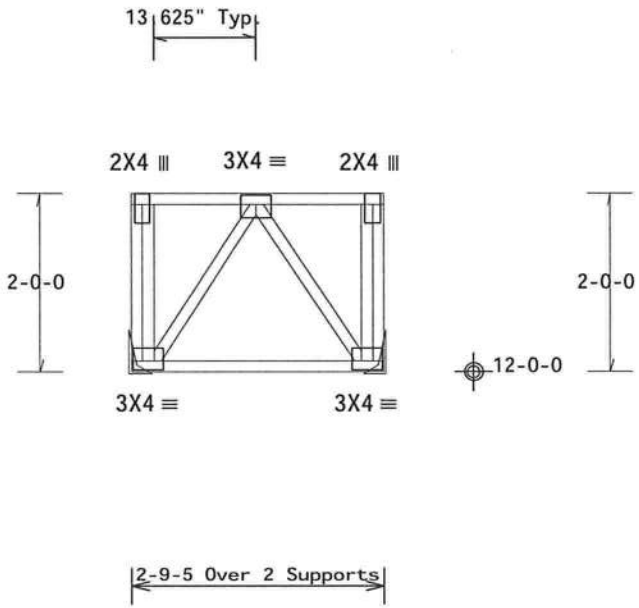

Design Crit: FBC2010Res/TPI-2007(STD)

PLT TYP. Wave FT/RT=12%(0%)/10(0) 10.03.11.0209.19 QTY 1 FL/-/5/-/-/R/- Scale =.5"/Ft.

WILLIAM H. KRICK LICENSE No. 70861 STATE OF FLORIDA PROFESSIONAL ENGINEER

01/22/2013

ALPINE
ITW Building Components Group Inc.
Haines City, FL 33844
FL COA #0 278

WARNING READ AND FOLLOW ALL NOTES ON THIS SHEET!
IMPORTANT FURNISH THIS DESIGN TO ALL CONTRACTORS INCLUDING INSTALLERS.

Trusses require extreme care in fabricating, handling, shipping, installing and bracing. Refer to and follow the latest edition of BCSI (Building Component Safety Information, by TPI and WTCA) for safety practices prior to performing these functions. Installers shall provide temporary bracing per BCSI. Unless noted otherwise, top chord shall have properly attached structural sheathing and bottom chord shall have a properly attached rigid ceiling. Locations shown for permanent lateral restraint of webs shall have bracing installed per BCSI sections B3, B7 or B10, as applicable.

ITW Building Components Group Inc. (ITWBCG) shall not be responsible for any deviation from this design, any failure to build the truss in conformance with ANSI/TPI 1, or for handling, shipping, installation and bracing of trusses. Apply plates to each face of truss and position as shown above and on the Joint Details, unless noted otherwise. Refer to drawings 160A-Z for standard plate positions. A seal on this drawing or cover page listing this drawing, indicates acceptance of professional engineering responsibility solely for the design shown. The suitability and use of this design for any structure is the responsibility of the Building Designer per ANSI/TPI 1 Sec.2. For more information see: This job's general notes page; ITW-BCG: www.itwbcg.com; TPI: www.tpinst.org; WTCA: www.sbcindustry.com; ICC: www.iccsafe.org

TC LL	40.0 PSF	REF	R9114- 81545
TC DL	10.0 PSF	DATE	01/21/13
BC DL	5.0 PSF	DRW	HCUSR9114 13021252
BC LL	0.0 PSF	HC-ENG	JB/AP
TOT.LD.	55.0 PSF	SEQN-	46834
DUR.FAC.	1.00	FROM	SDY
SPACING	24.0"	JREF-	1UT39114Z03

THIS DWG PREPARED FROM COMPUTER INPUT (LOADS & DIMENSIONS) SUBMITTED BY TRUSS MFR.

(120912F--Anderson Truss Co. Patel Residence -- Lot 1 Hills Of Windsor , ** - F66)

Top chord 4x2 SP_#1_12A
Bot chord 4x2 SP_#1_12A
Webs 4x2 SP_#3__12A

Lumber grades designated with "12A" use design values approved 1/5/2012 by ALSC.

Deflection meets L/360 live and L/240 total load. Creep increase factor for dead load is 1.50.

Truss must be installed as shown with top chord up.

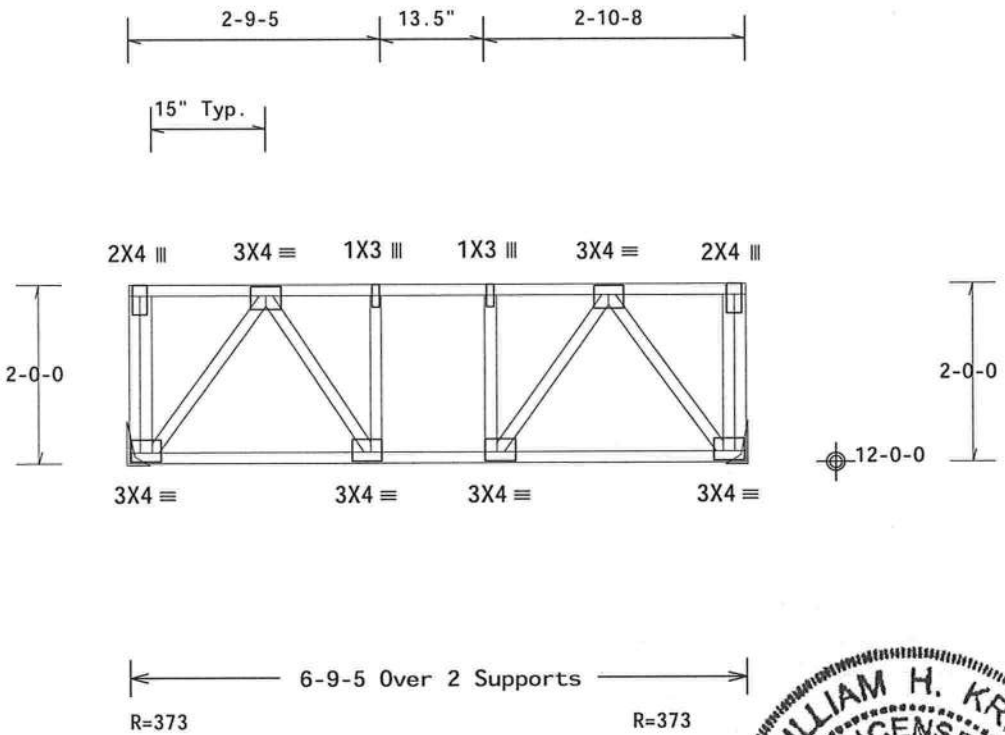

Design Crit: FBC2010Res/TPI-2007(STD)
FT/RT=12%(0%)/10(0)

10.03.11.0209.19 QTY: 1

FL/-/5/-/-/R/-

Scale =.5"/Ft.

PLT TYP. Wave

ALPINE
ITW Building Components Group Inc.
Haines City, FL 33844
FL COA #0 278

WARNING READ AND FOLLOW ALL NOTES ON THIS SHEET!
IMPORTANT FURNISH THIS DESIGN TO ALL CONTRACTORS INCLUDING INSTALLERS.

Trusses require extreme care in fabricating, handling, shipping, installing and bracing. Refer to and follow the latest edition of BCSI (Building Component Safety Information, by TPI and WTCA) for general practices prior to performing these functions. Installers shall provide temporary bracing per BCSI. Unless noted otherwise, top chord shall have properly attached structural sheathing and bottom chord shall have a properly attached rigid ceiling. Locations shown for permanent lateral restraint of webs shall have bracing installed per BCSI sections B3, B7 or B10, as applicable.

ITW Building Components Group Inc. (ITWBCG) shall not be responsible for any deviation from this design, any failure to build the truss in conformance with ANSI/TPI 1, or for handling, shipping, installation and bracing of trusses. Apply plates to each face of truss and position as shown above and on the Joint Details, unless noted otherwise. Refer to drawings 160A-Z for standard plate positions. A seal on this drawing or cover page listing this drawing, indicates acceptance of professional engineering responsibility solely for the design shown. The suitability and use of this design for any structure is the responsibility of the Building Designer per ANSI/TPI 1 Sec.2. For more information see: This job's general notes page; ITW-BCG: www.itwbcg.com; TPI: www.tpinst.org; WTCA: www.sbcindustry.com; ICC: www.iccsafe.org

WILLIAM H. KRICK
LICENSE
No. 70861
STATE OF FLORIDA
PROFESSIONAL ENGINEER
01/22/2013

TC LL	40.0 PSF	REF	R9114- 81546
TC DL	10.0 PSF	DATE	01/21/13
BC DL	5.0 PSF	DRW	HCUSR9114 13021253
BC LL	0.0 PSF	HC-ENG	JB/AP
TOT.LD.	55.0 PSF	SEQN-	46835
DUR.FAC.	1.00	FROM	SDY
SPACING	24.0"	JREF-	1UT39114Z03

THIS DWG PREPARED FROM COMPUTER INPUT (LOADS & DIMENSIONS) SUBMITTED BY TRUSS MFR.

(120912F--Anderson Truss Co. Patel Residence -- Lot 1 Hills Of Windsor , ** - F67)

Top chord 4x2 SP_#1_12A
Bot chord 4x2 SP_#1_12A
Webs 4x2 SP_#3__12A

Lumber grades designated with "12A" use design values approved 1/5/2012 by ALSC.

See detail STRBRIBR0211 for bracing and bridging recommendations.

Deflection meets L/360 live and L/240 total load. Creep increase factor for dead load is 1.50.

Truss must be installed as shown with top chord up.

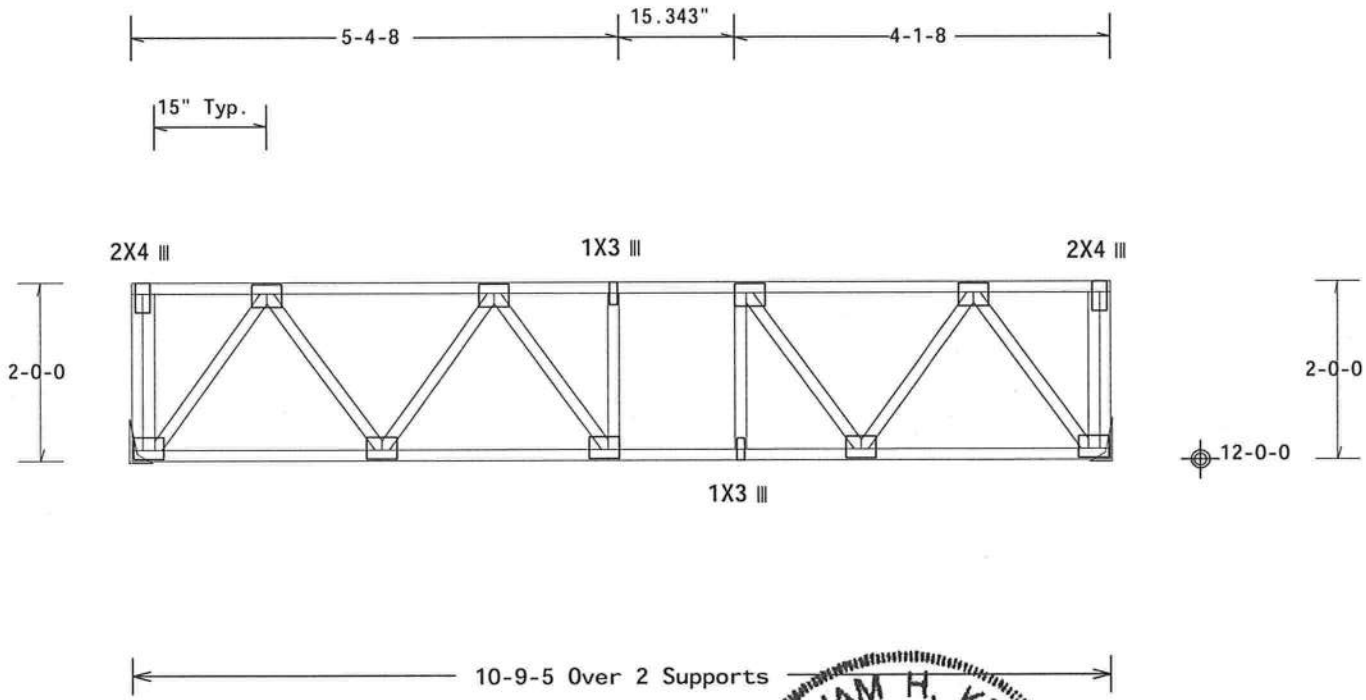

Note: All Plates Are 3X4 Except As Shown.

Design Crit: FBC2010Res/TPI-2007(STD)

PLT TYP. Wave FT/RT=12%(0%)/10(0) 10.03.11.0209.19 QTY: 1 FL/-/5/-/-/R/- Scale =.5"/Ft.

WILLIAM H. KRICK LICENSE No. 70861 STATE OF FLORIDA PROFESSIONAL ENGINEER

01/22/2013

ALPINE
ITW Building Components Group Inc.
Haines City, FL 33844
FL COA #0 278

WARNING READ AND FOLLOW ALL NOTES ON THIS SHEET!
IMPORTANT FURNISH THIS DESIGN TO ALL CONTRACTORS INCLUDING INSTALLERS.

Trusses require extreme care in fabricating, handling, shipping, installing and bracing. Refer to and follow the latest edition of BCSI (Building Component Safety Information, by TPI and WTCA) for safety practices prior to performing these functions. Installers shall provide temporary bracing per BCSI. Unless noted otherwise, top chord shall have properly attached structural sheathing and bottom chord shall have a properly attached rigid ceiling. Locations shown for permanent lateral restraint of webs shall have bracing installed per BCSI sections B3, B7 or B10, as applicable.

ITW Building Components Group Inc. (ITWBCG) shall not be responsible for any deviation from this design, any failure to build the truss in conformance with ANSI/TPI 1, or for handling, shipping, installation and bracing of trusses. Apply plates to each face of truss and position as shown above and on the Joint Details, unless noted otherwise. Refer to drawings 160A-Z for standard plate positions. A seal on this drawing or cover page listing this drawing, indicates acceptance of professional engineering responsibility solely for the design shown. The suitability and use of this design for any structure is the responsibility of the Building Designer per ANSI/TPI 1 Sec.2. For more information see: This job's general notes page; ITW-BCG: www.itwbcg.com; TPI: www.tpinst.org; WTCA: www.sbcindustry.com; ICC: www.iccsafe.org

TC LL	40.0 PSF	REF	R9114- 81547
TC DL	10.0 PSF	DATE	01/21/13
BC DL	5.0 PSF	DRW	HCUSR9114 13021254
BC LL	0.0 PSF	HC-ENG	JB/AP
TOT.LD.	55.0 PSF	SEQN-	46836
DUR.FAC.	1.00	FROM	SDY
SPACING	24.0"	JREF-	1UT39114Z03

(120912F--Anderson Truss Co. Patel Residence -- Lot 1 Hills Of Windsor , ** - F68)

Top chord 4x2 SP_#1_12A
Bot chord 4x2 SP_#1_12A
Webs 4x2 SP_#3__12A

Lumber grades designated with "12A" use design values approved 1/5/2012 by ALSC.

+ 2x6 continuous strongback. See detail STRBRIBR0211 for bracing and bridging recommendations.

Deflection meets L/360 live and L/240 total load. Creep increase factor for dead load is 1.50.

Truss must be installed as shown with top chord up.

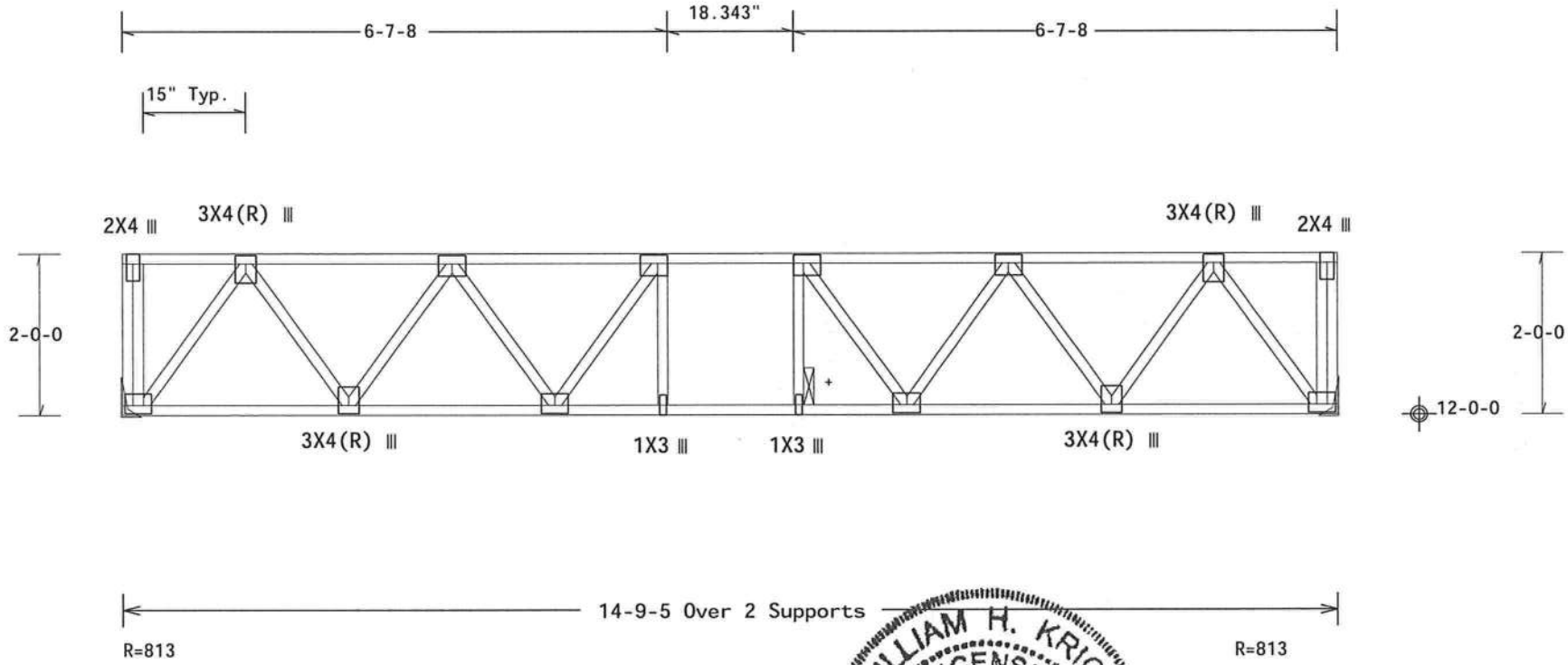

Note: All Plates Are 3X4 Except As Shown.

Design Crit: FBC2010Res/TPI-2007(STD)

PLT TYP. Wave FT/RT=12%(0%)/10(0) 10.03.11.0909.19 QTY:1 FL/-/5/-/-/R/- Scale =.5"/Ft.

WILLIAM H. KRICK LICENSE No. 70861 STATE OF FLORIDA PROFESSIONAL ENGINEER 01/22/2013

ALPINE
ITW Building Components Group Inc.
Haines City, FL 33844
FL COA #0 278

WARNING READ AND FOLLOW ALL NOTES ON THIS SHEET!
IMPORTANT FURNISH THIS DESIGN TO ALL CONTRACTORS INCLUDING INSTALLERS.

Trusses require extreme care in fabricating, handling, shipping, installing and bracing. Refer to and follow the latest edition of BCSI (Building Component Safety Information, by TPI and WTCA) for safety practices prior to performing these functions. Installers shall provide temporary bracing per BCSI. Unless noted otherwise, top chord shall have properly attached structural sheathing and bottom chord shall have a properly attached rigid ceiling. Locations shown for permanent lateral restraint of webs shall have bracing installed per BCSI sections B3, B7 or B10, as applicable.

ITW Building Components Group Inc. (ITWBCG) shall not be responsible for any deviation from this design, any failure to build the truss in conformance with ANSI/TPI 1, or for handling, shipping, installation and bracing of trusses. Apply plates to each face of truss and position as shown above and on the Joint Details, unless noted otherwise. Refer to drawings 160A-Z for standard plate positions. A seal on this drawing or cover page listing this drawing, indicates acceptance of professional engineering responsibility solely for the design shown. The suitability and use of this design for any structure is the responsibility of the Building Designer per ANSI/TPI 1 Sec.2. For more information see: This job's general notes page; ITW-BCG: www.itwbcg.com; TPI: www.tpinst.org; WTCA: www.sbcindustry.com; ICC: www.iccsafe.org

TC LL	40.0 PSF	REF	R9114- 81548
TC DL	10.0 PSF	DATE	01/21/13
BC DL	5.0 PSF	DRW	HCUSR9114 13021255
BC LL	0.0 PSF	HC-ENG	JB/AP
TOT.LD.	55.0 PSF	SEQN-	46837
DUR.FAC.	1.00	FROM	SDY
SPACING	24.0"	JREF-	1UT39114Z03

(120912F--Anderson Truss Co. Patel Residence -- Lot 1 Hills Of Windsor , ** - F69)

Top chord 4x2 SP_#1_12A
Bot chord 4x2 SP_#1_12A
Webs 4x2 SP_#3__12A

Lumber grades designated with "12A" use design values approved 1/5/2012 by ALSC.

+ 2x6 continuous strongback. See detail STRBRIBR0211 for bracing and bridging recommendations.

Deflection meets L/360 live and L/240 total load. Creep increase factor for dead load is 1.50.

Truss must be installed as shown with top chord up.

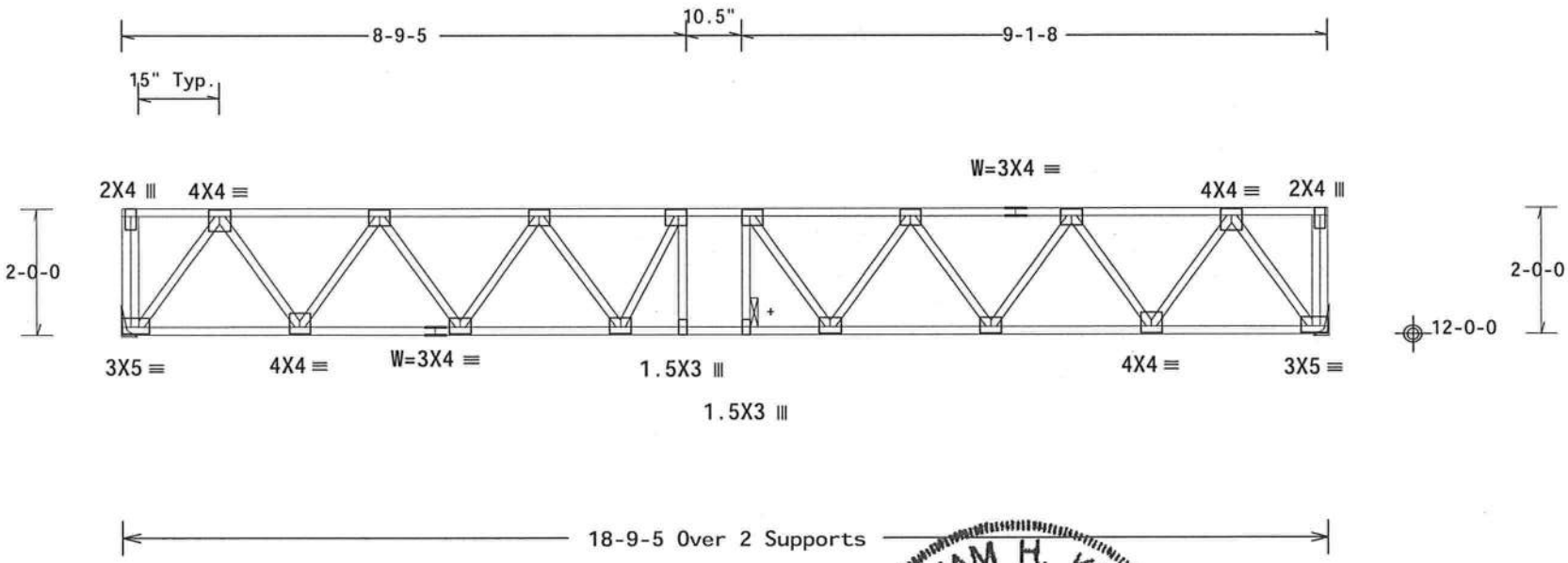

Note: All Plates Are 3X4 Except As Shown.

Design Crit: FBC2010Res/TPI-2007(STD)

PLT TYP. Wave FT/RT=12%(0%)/10(0) 10.03.11.0209.19 QTY: 1 FL/-/5/-/-/R/- Scale =.375"/Ft.

WILLIAM H. KRICK LICENSE No. 70861 STATE OF FLORIDA PROFESSIONAL ENGINEER

01/22/2013

ALPINE
ITW Building Components Group Inc.
Haines City, FL 33844
FL COA #0 278

WARNING READ AND FOLLOW ALL NOTES ON THIS SHEET!
IMPORTANT FURNISH THIS DESIGN TO ALL CONTRACTORS INCLUDING INSTALLERS.

Trusses require extreme care in fabricating, handling, shipping, installing and bracing. Refer to and follow the latest edition of BCSI (Building Component Safety Information, by TPI and WTCA) for safety practices prior to performing these functions. Installers shall provide temporary bracing per BCSI. Unless noted otherwise, top chord shall have properly attached structural sheathing and bottom chord shall have a properly attached rigid ceiling. Locations shown for permanent lateral restraint of webs shall have bracing installed per BCSI sections B3, B7 or B10, as applicable.

ITW Building Components Group Inc. (ITWBCG) shall not be responsible for any deviation from this design, any failure to build the truss in conformance with ANSI/TPI 1, or for handling, shipping, installation and bracing of trusses. Apply plates to each face of truss and position as shown above and on the Joint Details, unless noted otherwise. Refer to drawings 160A-Z for standard plate positions. A seal on this drawing or cover page listing this drawing, indicates acceptance of professional engineering responsibility solely for the design shown. The suitability and use of this design for any structure is the responsibility of the Building Designer per ANSI/TPI 1 Sec.2. For more information see: This job's general notes page; ITW-BCG: www.itwbcg.com; TPI: www.tpinst.org; WTCA: www.sbcindustry.com; ICC: www.iccsafe.org

TC LL	40.0 PSF	REF	R9114- 81549
TC DL	10.0 PSF	DATE	01/21/13
BC DL	5.0 PSF	DRW	HCUSR9114 13021256
BC LL	0.0 PSF	HC-ENG	JB/AP
TOT.LD.	55.0 PSF	SEQN-	46838
DUR.FAC.	1.00	FROM	SDY
SPACING	24.0"	JREF-	1UT39114Z03

(120912F--Anderson Truss Co. Patel Residence -- Lot 1 Hills Of Windsor , ** - F70)

Top chord 4x2 SP_#1_12A
Bot chord 4x2 SP_#1_12A
Webs 4x2 SP_#3__12A

Lumber grades designated with "12A" use design values approved 1/5/2012 by ALSC.

Truss must be installed as shown with top chord up.

+ 2x6 continuous strongback. See detail STRBRIBR0211 for bracing and bridging recommendations.

Max JT VERT DEFL: LL: 0.30" DL: 0.19" recommended camber 1/4"

Deflection meets L/360 live and L/240 total load. Creep increase factor for dead load is 1.50.

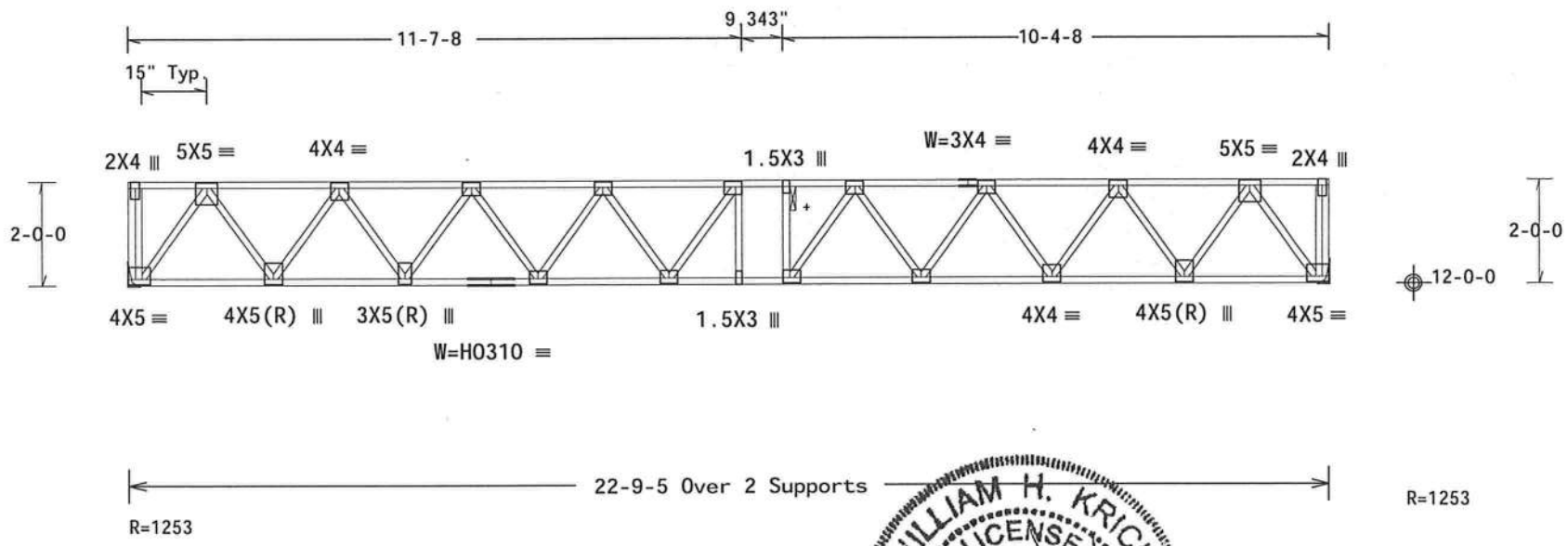

Note: All Plates Are 3X4 Except As Shown.

Design Crit: FBC2010Res/TPI-2007(STD)

PLT TYP. 20 Gauge HS,Wave

FT/RT=12%(0%)/10(0)

10.03.11.0209.19 QTY 1

FL/-/5/-/-/R/-

Scale =.3125"/Ft.

WILLIAM H. KRICK LICENSE No. 70861 STATE OF FLORIDA PROFESSIONAL ENGINEER

01/22/2013

ALPINE
ITW Building Components Group Inc.
Haines City, FL 33844
FL COA #0 278

WARNING READ AND FOLLOW ALL NOTES ON THIS SHEET!
IMPORTANT FURNISH THIS DESIGN TO ALL CONTRACTORS INCLUDING INSTALLERS.

Trusses require extreme care in fabricating, handling, shipping, installing and bracing. Refer to and follow the latest edition of BCSI (Building Component Safety Information, by TPI and WTCA) for safety practices prior to performing these functions. Installers shall provide temporary bracing per BCSI. Unless noted otherwise, top chord shall have properly attached structural sheathing and bottom chord shall have a properly attached rigid ceiling. Locations shown for permanent lateral restraint of webs shall have bracing installed per BCSI sections B3, B7 or B10, as applicable.

ITW Building Components Group Inc. (ITWBCG) shall not be responsible for any deviation from this design, any failure to build the truss in conformance with ANSI/TPI 1, or for handling, shipping, installation and bracing of trusses. Apply plates to each face of truss and position as shown above and on the Joint Details, unless noted otherwise. Refer to drawings 160A-Z for standard plate positions. A seal on this drawing or cover page listing this drawing, indicates acceptance of professional engineering responsibility solely for the design shown. The suitability and use of this design for any structure is the responsibility of the Building Designer per ANSI/TPI 1 Sec.2. For more information see: This job's general notes page; ITW-BCG: www.itwbcg.com; TPI: www.tpinst.org; WTCA: www.sbcindustry.com; ICC: www.iccsafe.org

TC LL	40.0 PSF	REF	R9114- 81550
TC DL	10.0 PSF	DATE	01/21/13
BC DL	5.0 PSF	DRW	HCUSR9114 13021257
BC LL	0.0 PSF	HC-ENG	JB/AP
TOT.LD.	55.0 PSF	SEQN-	46839
DUR.FAC.	1.00	FROM	SDY
SPACING	24.0"	JREF-	1UT39114Z03

THIS DWG PREPARED FROM COMPUTER INPUT (LOADS & DIMENSIONS) SUBMITTED BY TRUSS MFR.

(120912F--Anderson Truss Co. Patel Residence -- Lot 1 Hills Of Windsor , ** - F71)

Top chord 4x2 SP_#1_12A
Bot chord 4x2 SP_#1_12A
Webs 4x2 SP_#3__12A

Lumber grades designated with "12A" use design values approved 1/5/2012 by ALSC.

See detail STRBRIBR0211 for bracing and bridging recommendations.

Deflection meets L/360 live and L/240 total load. Creep increase factor for dead load is 1.50.

Truss must be installed as shown with top chord up.

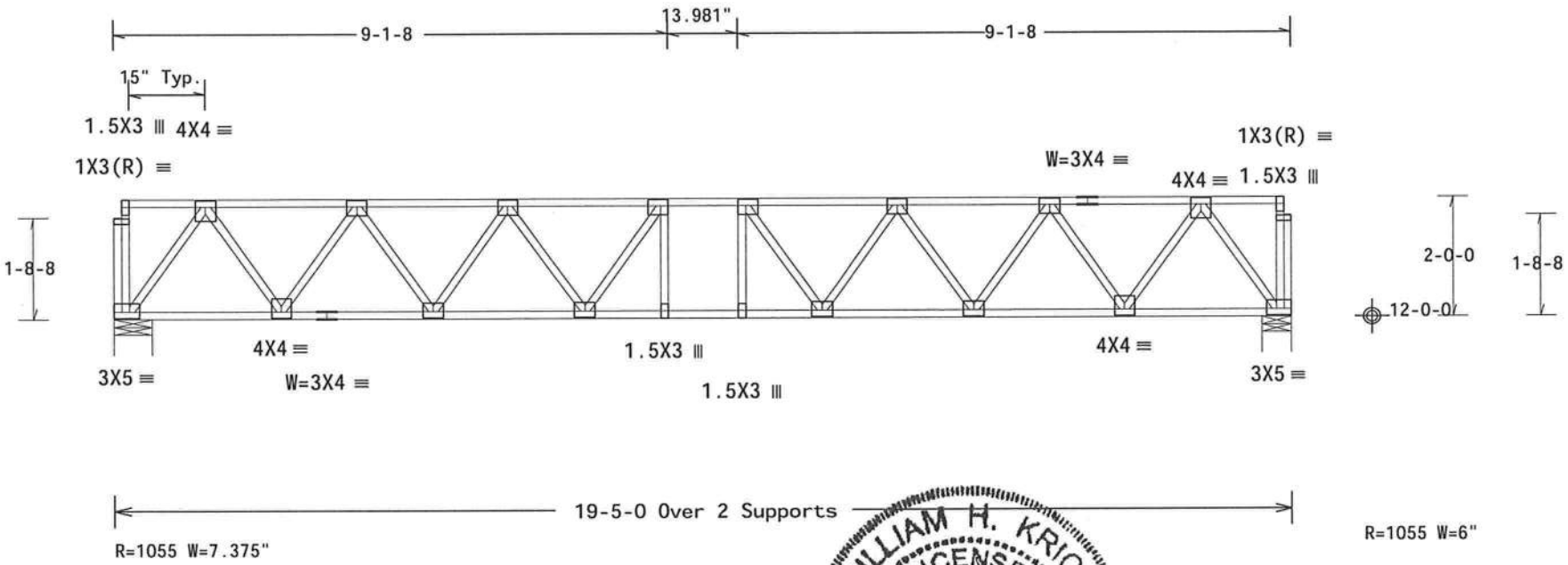

Note: All Plates Are 3X4 Except As Shown.

Design Crit: FBC2010Res/TPI-2007(STD)

PLT TYP. Wave

FT/RT=12%(0%)/10(0) 10.03.11.0209.19 QTY:1 FL/-/5/-/-/R/- Scale =.375"/Ft.

WILLIAM H. KRICK LICENSE No. 70861 STATE OF FLORIDA PROFESSIONAL ENGINEER

01/22/2013

ALPINE
ITW Building Components Group Inc.
Haines City, FL 33844
FL COA #0 278

WARNING READ AND FOLLOW ALL NOTES ON THIS SHEET!
IMPORTANT FURNISH THIS DESIGN TO ALL CONTRACTORS INCLUDING INSTALLERS.

Trusses require extreme care in fabricating, handling, shipping, installing and bracing. Refer to and follow the latest edition of BCSI (Building Component Safety Information, by TPI and WTCA) for safety practices prior to performing these functions. Installers shall provide temporary bracing per BCSI. Unless noted otherwise, top chord shall have properly attached structural sheathing and bottom chord shall have a properly attached rigid ceiling. Locations shown for permanent lateral restraint of webs shall have bracing installed per BCSI sections B3, B7 or B10, as applicable.

ITW Building Components Group Inc. (ITWBCG) shall not be responsible for any deviation from this design, any failure to build the truss in conformance with ANSI/TPI 1, or for handling, shipping, installation and bracing of trusses. Apply plates to each face of truss and position as shown above and on the Joint Details, unless noted otherwise. Refer to drawings 160A-Z for standard plate positions. A seal on this drawing or cover page listing this drawing, indicates acceptance of professional engineering responsibility solely for the design shown. The suitability and use of this design for any structure is the responsibility of the Building Designer per ANSI/TPI 1 Sec.2. For more information see: This job's general notes page; ITW-BCG: www.itwbcg.com; TPI: www.tpinst.org; WTCA: www.sbcindustry.com; ICC: www.iccsafe.org

TC LL	40.0 PSF	REF	R9114- 81551
TC DL	10.0 PSF	DATE	01/21/13
BC DL	5.0 PSF	DRW	HCUSR9114 13021224
BC LL	0.0 PSF	HC-ENG	JB/AP
TOT.LD.	55.0 PSF	SEQN-	46840
DUR.FAC.	1.00	FROM	SDY
SPACING	24.0"	JREF-	1UT39114Z03

(120912F--Anderson Truss Co. Patel Residence -- Lot 1 Hills Of Windsor , ** - F72)

Top chord 4x2 SP_#1_12A
Bot chord 4x2 SP_#1_12A
Webs 4x2 SP_#3__12A

Lumber grades designated with "12A" use design values approved 1/5/2012 by ALSC.

+ 2x6 continuous strongback. See detail STRBRIBR0211 for bracing and bridging recommendations.

Deflection meets L/360 live and L/240 total load. Creep increase factor for dead load is 1.50.

Truss must be installed as shown with top chord up.

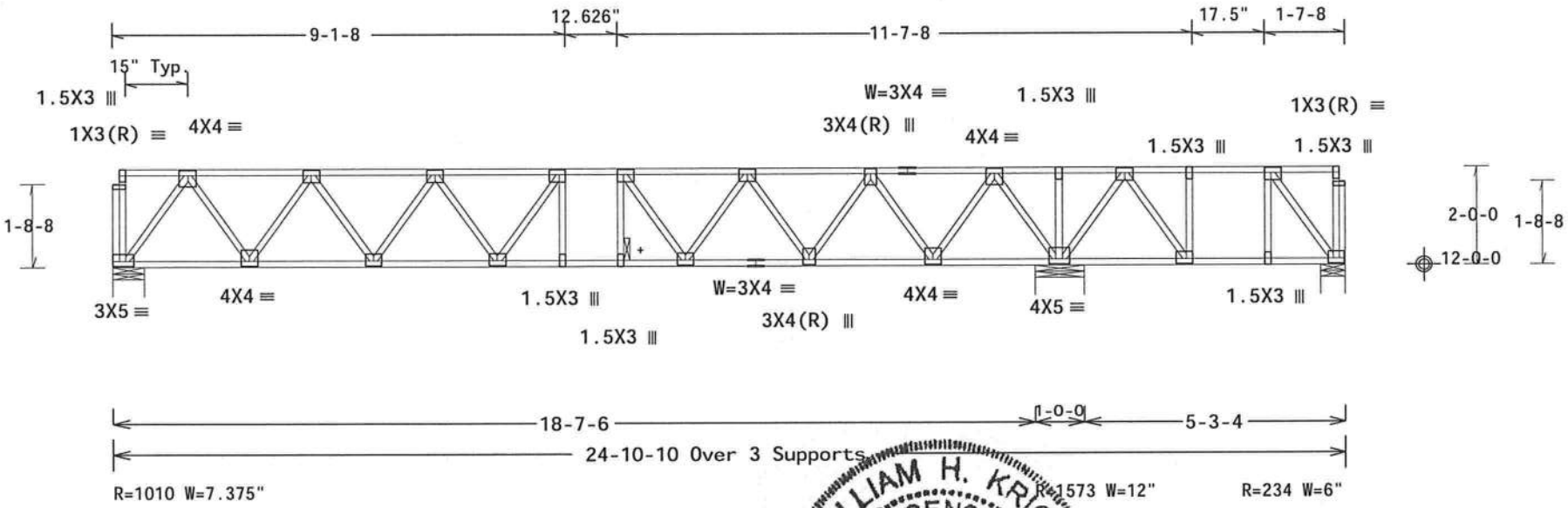

Note: All Plates Are 3X4 Except As Shown.

Design Crit: FBC2010Res/TPI-2007(STD)

PLT TYP. Wave

FT/RT=12%(0%)/10(0) 10.03.11.0209.19 QTY:2 FL/-/5/-/-/R/- Scale =.3125"/Ft.

WILLIAM H. KRICK LICENSE No. 70861 STATE OF FLORIDA PROFESSIONAL ENGINEER

01/22/2013

ALPINE

ITW Building Components Group Inc.

Haines City, FL 33844
FL COA #0 278

WARNING READ AND FOLLOW ALL NOTES ON THIS SHEET!
IMPORTANT FURNISH THIS DESIGN TO ALL CONTRACTORS INCLUDING INSTALLERS.

Trusses require extreme care in fabricating, handling, shipping, installing and bracing. Refer to and follow the latest edition of BCSI (Building Component Safety Information, by TPI and WTCA) for safety practices prior to performing these functions. Installers shall provide temporary bracing per BCSI. Unless noted otherwise, top chord shall have properly attached structural sheathing and bottom chord shall have a properly attached rigid ceiling. Locations shown for permanent lateral restraint of webs shall have bracing installed per BCSI sections B3, B7 or B10, as applicable.

ITW Building Components Group Inc. (ITWBCG) shall not be responsible for any deviation from this design, any failure to build the truss in conformance with ANSI/TPI 1, or for handling, shipping, installation and bracing of trusses. Apply plates to each face of truss and position as shown above and on the Joint Details, unless noted otherwise. Refer to drawings 160A-Z for standard plate positions. A seal on this drawing or cover page listing this drawing, indicates acceptance of professional engineering responsibility solely for the design shown. The suitability and use of this design for any structure is the responsibility of the Building Designer per ANSI/TPI 1 Sec.2. For more information see: This job's general notes page; ITW-BCG: www.itwbcg.com; TPI: www.tpinst.org; WTCA: www.sbcindustry.com; ICC: www.iccsafe.org

TC LL	40.0 PSF	REF	R9114- 81552
TC DL	10.0 PSF	DATE	01/22/13
BC DL	5.0 PSF	DRW	HCUSR9114 13022210
BC LL	0.0 PSF	HC-ENG	WHK/WHK
TOT.LD.	55.0 PSF	SEQN-	97244
DUR.FAC.	1.00	FROM	SDY
SPACING	24.0"	JREF-	1UT39114Z03

(120912F--Anderson Truss Co. Patel Residence -- Lot 1 Hills Of Windsor , ** - F73)

Top chord 4x2 SP_#1_12A
Bot chord 4x2 SP_#1_12A
Webs 4x2 SP_#3__12A

Lumber grades designated with "12A" use design values approved 1/5/2012 by ALSC.

Deflection meets L/360 live and L/240 total load. Creep increase factor for dead load is 1.50.

Truss must be installed as shown with top chord up.

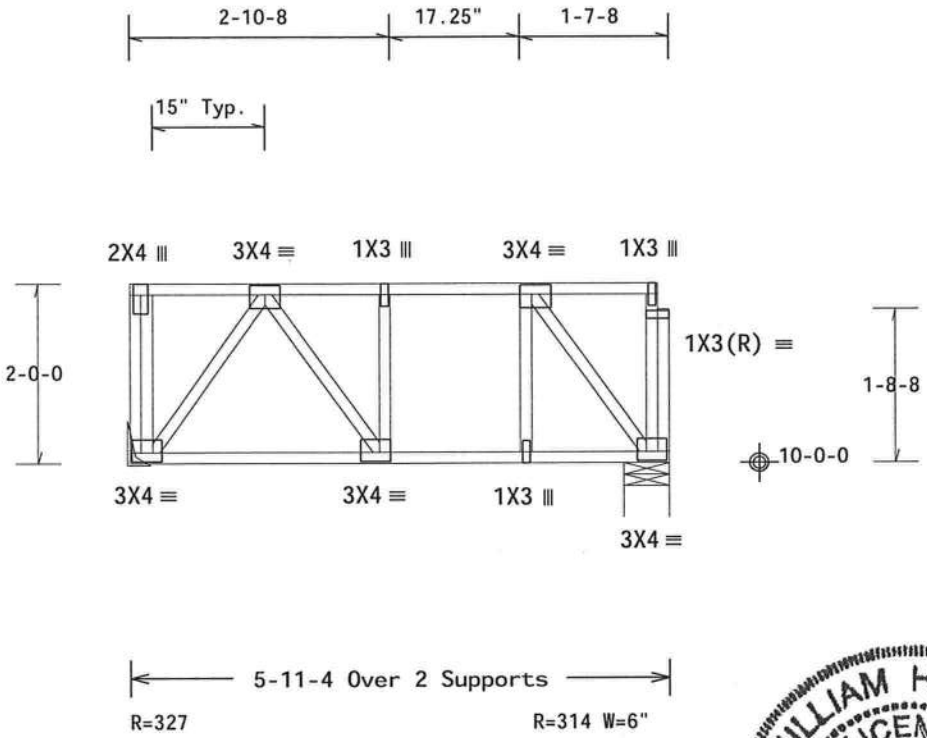

Design Crit: FBC2010Res/TPI-2007(STD)
FT/RT=12%(0%)/10(0)

10.03.11.0709.19 TOTY 1

FL/-/5/-/-/R/-

Scale =.5"/Ft.

PLT TYP. Wave

ALPINE
ITW Building Components Group Inc.
Haines City, FL 33844
FL COA #0 278

WARNING READ AND FOLLOW ALL NOTES ON THIS SHEET!
IMPORTANT FURNISH THIS DESIGN TO ALL CONTRACTORS INCLUDING INSTALLERS.

Trusses require extreme care in fabricating, handling, shipping, installing and bracing. Refer to and follow the latest edition of BCSI (Building Component Safety Information, by TPI and WTCA) for safety practices prior to performing these functions. Installers shall provide temporary bracing per BCSI. Unless noted otherwise, top chord shall have properly attached structural sheathing and bottom chord shall have a properly attached rigid ceiling. Locations shown for permanent lateral restraint of webs shall have bracing installed per BCSI sections B3, B7 or B10, as applicable.

ITW Building Components Group Inc. (ITWBCG) shall not be responsible for any deviation from this design, any failure to build the truss in conformance with ANSI/TPI 1, or for handling, shipping, installation and bracing of trusses. Apply plates to each face of truss and position as shown above and on the Joint Details, unless noted otherwise. Refer to drawings 160A-Z for standard plate positions. A seal on this drawing or cover page listing this drawing, indicates acceptance of professional engineering responsibility solely for the design shown. The suitability and use of this design for any structure is the responsibility of the Building Designer per ANSI/TPI 1 Sec.2. For more information see: This job's general notes page; ITW-BCG: www.itwbcg.com; TPI: www.tpinst.org; WTCA: www.sbcindustry.com; ICC: www.iccsafe.org

WILLIAM H. KRICK
LICENSE
No. 70861
STATE OF FLORIDA
PROFESSIONAL ENGINEER

01/22/2013

TC LL	40.0 PSF	REF	R9114- 81553
TC DL	10.0 PSF	DATE	01/21/13
BC DL	5.0 PSF	DRW	HCUSR9114 13021221
BC LL	0.0 PSF	HC-ENG	JB/AP
TOT.LD.	55.0 PSF	SEQN-	46842
DUR.FAC.	1.00	FROM	SDY
SPACING	24.0"	JREF-	1UT39114Z03

(120912F--Anderson Truss Co. Patel Residence -- Lot 1 Hills Of Windsor , ** - F89)

Top chord 4x2 SP_#1_12A
Bot chord 4x2 SP_#1_12A
Webs 4x2 SP_#3__12A

Lumber grades designated with "12A" use design values approved 1/5/2012 by ALSC.

+ 2x6 continuous strongback. See detail STRBRIBR0211 for bracing and bridging recommendations.

Deflection meets L/360 live and L/240 total load. Creep increase factor for dead load is 1.50.

Truss must be installed as shown with top chord up.

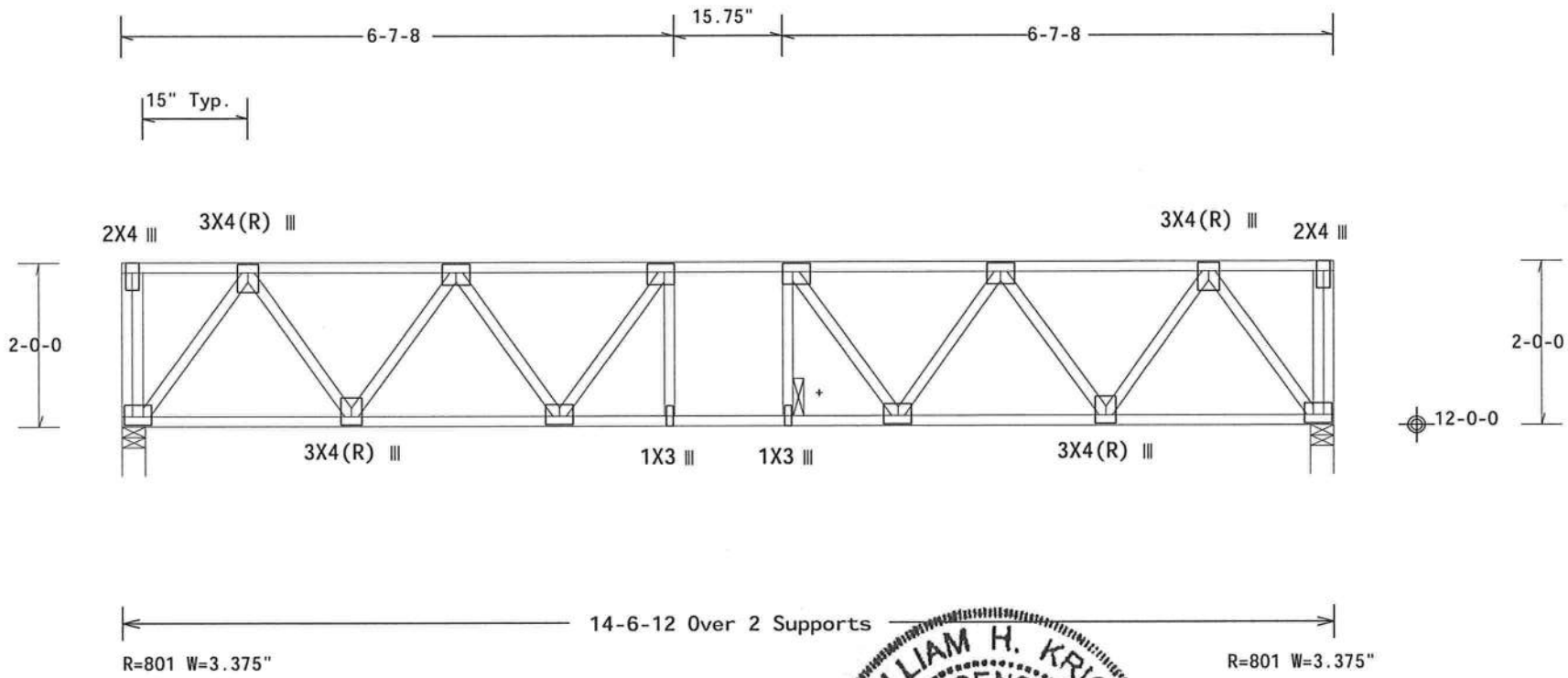

Note: All Plates Are 3X4 Except As Shown.

Design Crit: FBC2010Res/TPI-2007(STD)

PLT TYP. Wave

FT/RT=12%(0%)/10(0) 10.03.11.0209 19 QTY:10 FL/-/5/-/-/R/- Scale =.5"/Ft.

ALPINE
ITW Building Components Group Inc.
Haines City, FL 33844
FL COA #0 278

WARNING READ AND FOLLOW ALL NOTES ON THIS SHEET!
IMPORTANT FURNISH THIS DESIGN TO ALL CONTRACTORS INCLUDING INSTALLERS.

Trusses require extreme care in fabricating, handling, shipping, installing and bracing. Refer to and follow the latest edition of BCSI (Building Component Safety Information, by TPI and WTCA) for safety practices prior to performing these functions. Installers shall provide temporary bracing per BCSI. Unless noted otherwise, top chord shall have properly attached structural sheathing and bottom chord shall have a properly attached rigid ceiling. Locations shown for permanent lateral restraint of webs shall have bracing installed per BCSI sections B3, B7 or B10, as applicable.

ITW Building Components Group Inc. (ITWBCG) shall not be responsible for any deviation from this design, any failure to build the truss in conformance with ANSI/TPI 1, or for handling, shipping, installation and bracing of trusses. Apply plates to each face of truss and position as shown above and on the Joint Details, unless noted otherwise. Refer to drawings 160A-Z for standard plate positions. A seal on this drawing or cover page listing this drawing, indicates acceptance of professional engineering responsibility solely for the design shown. The suitability and use of this design for any structure is the responsibility of the Building Designer per ANSI/TPI 1 Sec.2. For more information see: This job's general notes page; ITW-BCG: www.itwbcg.com; TPI: www.tpinst.org; WTCA: www.sbcindustry.com; ICC: www.iccsafe.org

WILLIAM H. KRICK LICENSE No. 70861 STATE OF FLORIDA PROFESSIONAL ENGINEER

01/22/2013

TC LL	40.0 PSF	REF	R9114- 81554
TC DL	10.0 PSF	DATE	01/21/13
BC DL	5.0 PSF	DRW	HCUSR9114 13021225
BC LL	0.0 PSF	HC-ENG	JB/AP
TOT.LD.	55.0 PSF	SEQN-	46843
DUR.FAC.	1.00	FROM	SDY
SPACING	24.0"	JREF-	1UT39114Z03

THIS DWG PREPARED FROM COMPUTER INPUT (LOADS & DIMENSIONS) SUBMITTED BY TRUSS MFR.

(120912F--Anderson Truss Co. Patel Residence -- Lot 1 Hills Of Windsor , ** - F90)

Top chord 4x2 SP_#1_12A
Bot chord 4x2 SP_#1_12A
Webs 4x2 SP_#3__12A

Lumber grades designated with "12A" use design values approved 1/5/2012 by ALSC.

See detail STRBRIBR0211 for bracing and bridging recommendations.

Deflection meets L/360 live and L/240 total load. Creep increase factor for dead load is 1.50.

Truss must be installed as shown with top chord up.

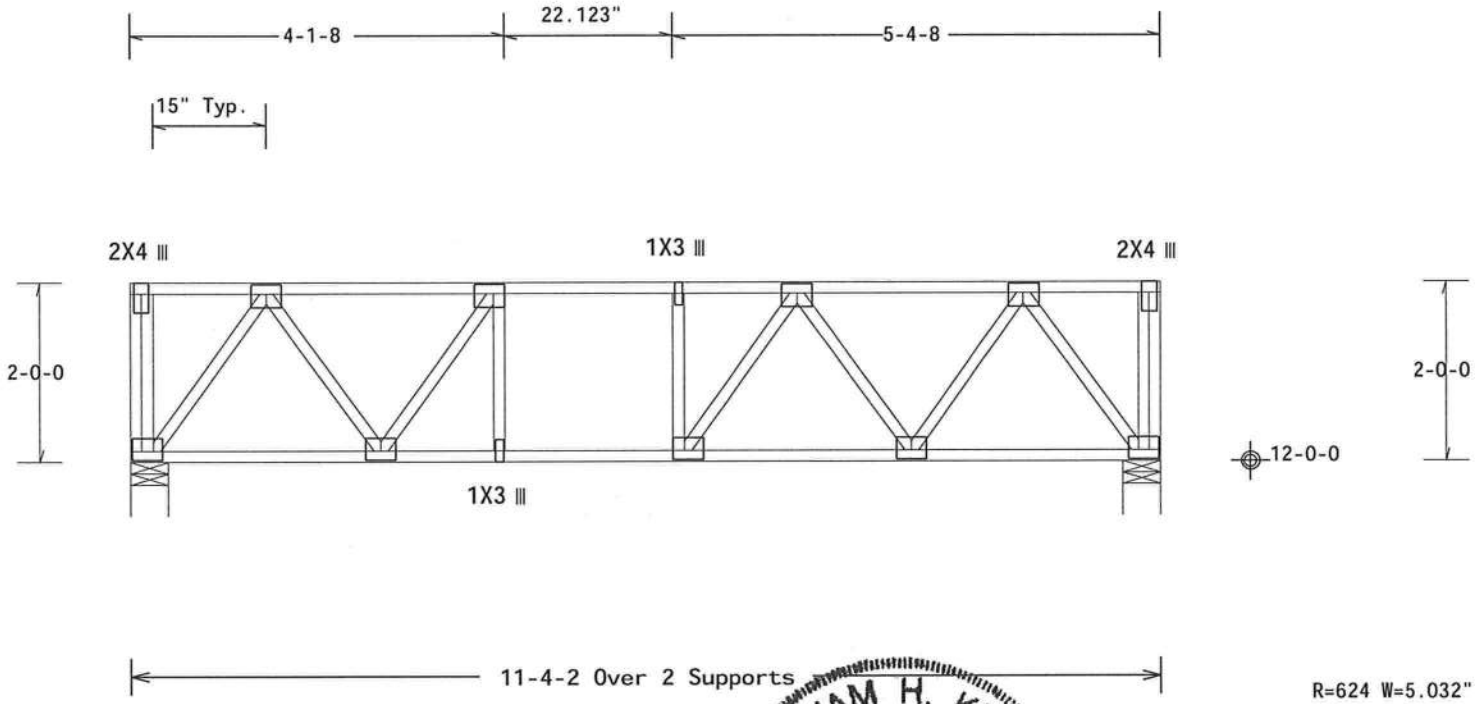

Note: All Plates Are 3X4 Except As Shown.

Design Crit: FBC2010Res/TPI-2007(STD)

PLT TYP. Wave FT/RT=12%(0%)/10(0) 10.03.11.0209.19 QTY:2 FL/-/5/-/-/R/- Scale =.5"/Ft.

ALPINE
ITW Building Components Group Inc.
Haines City, FL 33844
FL COA #0 278

WARNING READ AND FOLLOW ALL NOTES ON THIS SHEET!
IMPORTANT FURNISH THIS DESIGN TO ALL CONTRACTORS INCLUDING INSTALLERS.

Trusses require extreme care in fabricating, handling, shipping, installing and bracing. Refer to and follow the latest edition of BCSI (Building Component Safety Information, by TPI and WTCA) for safety practices prior to performing these functions. Installers shall provide temporary bracing per BCSI. Unless noted otherwise, top chord shall have properly attached structural sheathing and bottom chord shall have a properly attached rigid ceiling. Locations shown for permanent lateral restraint of webs shall have bracing installed per BCSI sections B3, B7 or B10, as applicable.

ITW Building Components Group Inc. (ITWBCG) shall not be responsible for any deviation from this design, any failure to build the truss in conformance with ANSI/TPI 1, or for handling, shipping, installation and bracing of trusses. Apply plates to each face of truss and position as shown above and on the Joint Details, unless noted otherwise. Refer to drawings 160A-Z for standard plate positions. A seal on this drawing or cover page listing this drawing, indicates acceptance of professional engineering responsibility solely for the design shown. The suitability and use of this design for any structure is the responsibility of the Building Designer per ANSI/TPI 1 Sec.2. For more information see: This job's general notes page; ITW-BCG: www.itwbcg.com; TPI: www.tpinst.org; WTCA: www.sbcindustry.com; ICC: www.iccsafe.org

WILLIAM H. KRICK LICENSE No. 70861 STATE OF FLORIDA PROFESSIONAL ENGINEER
01/22/2013

TC LL	40.0 PSF	REF	R9114- 81555
TC DL	10.0 PSF	DATE	01/21/13
BC DL	5.0 PSF	DRW	HCUSR9114 13021223
BC LL	0.0 PSF	HC-ENG	JB/AP
TOT.LD.	55.0 PSF	SEQN-	46844
DUR.FAC.	1.00	FROM	SDY
SPACING	24.0"	JREF-	1UT39114Z03

THIS DWG PREPARED FROM COMPUTER INPUT (LOADS & DIMENSIONS) SUBMITTED BY TRUSS MFR.

(120912F--Anderson Truss Co. Patel Residence -- Lot 1 Hills Of Windsor , ** - F91)

Top chord 4x2 SP_#1_12A
Bot chord 4x2 SP_#1_12A
Webs 4x2 SP_#3__12A

Lumber grades designated with "12A" use design values approved 1/5/2012 by ALSC.

Deflection meets L/360 live and L/240 total load. Creep increase factor for dead load is 1.50.

Truss must be installed as shown with top chord up.

Sheathing is required for any longitudinal(drag) forces. All connections to be designed by the building designer.

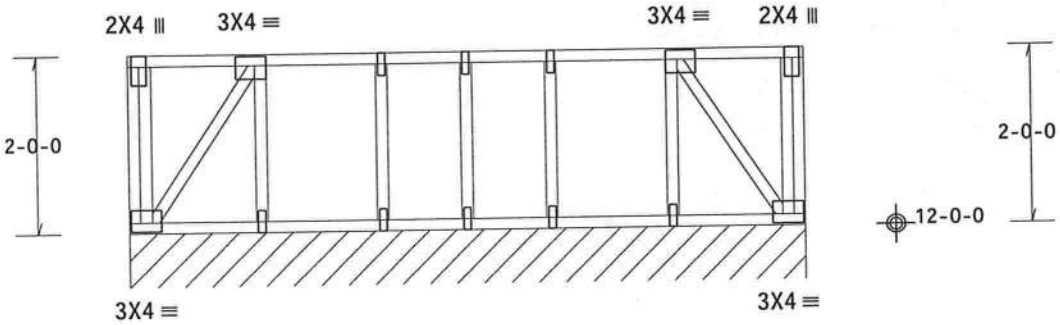

7-5-6 Over Continuous Support

R=110 PLF W=7-5-6

Note: All Plates Are 1X3 Except As Shown.

Design Crit: FBC2010Res/TPI-2007(STD)
FT/RT=12%(0%)/10(0)

PLT TYP. Wave

10.03.11.0209.19 QTY-2 FL/-/5/-/-/R/- Scale =.5"/Ft.

WILLIAM H. KRICK LICENSE No. 70861 STATE OF FLORIDA PROFESSIONAL ENGINEER

01/22/2013

ALPINE
ITW Building Components Group Inc.
Haines City, FL 33844
FL COA #0 278

WARNING READ AND FOLLOW ALL NOTES ON THIS SHEET!
IMPORTANT FURNISH THIS DESIGN TO ALL CONTRACTORS INCLUDING INSTALLERS.

Trusses require extreme care in fabricating, handling, shipping, installing and bracing. Refer to and follow the latest edition of BCSI (Building Component Safety Information, by TPI and WTCA) for safety practices prior to performing these functions. Installers shall provide temporary bracing per BCSI. Unless noted otherwise, top chord shall have properly attached structural sheathing and bottom chord shall have a properly attached rigid ceiling. Locations shown for permanent lateral restraint of webs shall have bracing installed per BCSI sections B3, B7 or B10, as applicable.

ITW Building Components Group Inc. (ITWBCG) shall not be responsible for any deviation from this drawing, any failure to build the truss in conformance with ANSI/TPI 1, or for handling, shipping, installation and bracing of trusses. Apply plates to each face of truss and position as shown above and on the Joint Details, unless noted otherwise. Refer to drawings 160A-Z for standard plate positions. A seal on this drawing or cover page listing this drawing, indicates acceptance of professional engineering responsibility solely for the design shown. The suitability and use of this design for any structure is the responsibility of the Building Designer per ANSI/TPI 1 Sec.2. For more information see: This job's general notes page; ITW-BCG: www.itwbcg.com; TPI: www.tpinst.org; WTCA: www.sbcindustry.com; ICC: www.iccsafe.org

TC LL	40.0 PSF	REF	R9114- 81556
TC DL	10.0 PSF	DATE	01/21/13
BC DL	5.0 PSF	DRW	HCUSR9114 13021222
BC LL	0.0 PSF	HC-ENG	JB/AP
TOT.LD.	55.0 PSF	SEQN-	46845
DUR.FAC.	1.00	FROM	SDY
SPACING	24.0"	JREF-	1UT39114Z03

THIS DWG PREPARED FROM COMPUTER INPUT (LOADS & DIMENSIONS) SUBMITTED BY TRUSS MFR.

(120912F--Anderson Truss Co. Patel Residence -- Lot 1 Hills Of Windsor , ** - F92)

Top chord 4x2 SP_#1_12A
Bot chord 4x2 SP_#1_12A
Webs 4x2 SP_#3__12A

Lumber grades designated with "12A" use design values approved 1/5/2012 by ALSC.

Truss must be installed as shown with top chord up.

See detail STRBRIBR0211 for bracing and bridging recommendations.

(H1) = (J) Hanger not calculated Unavailable supporting member.

Deflection meets L/360 live and L/240 total load. Creep increase factor for dead load is 1.50.

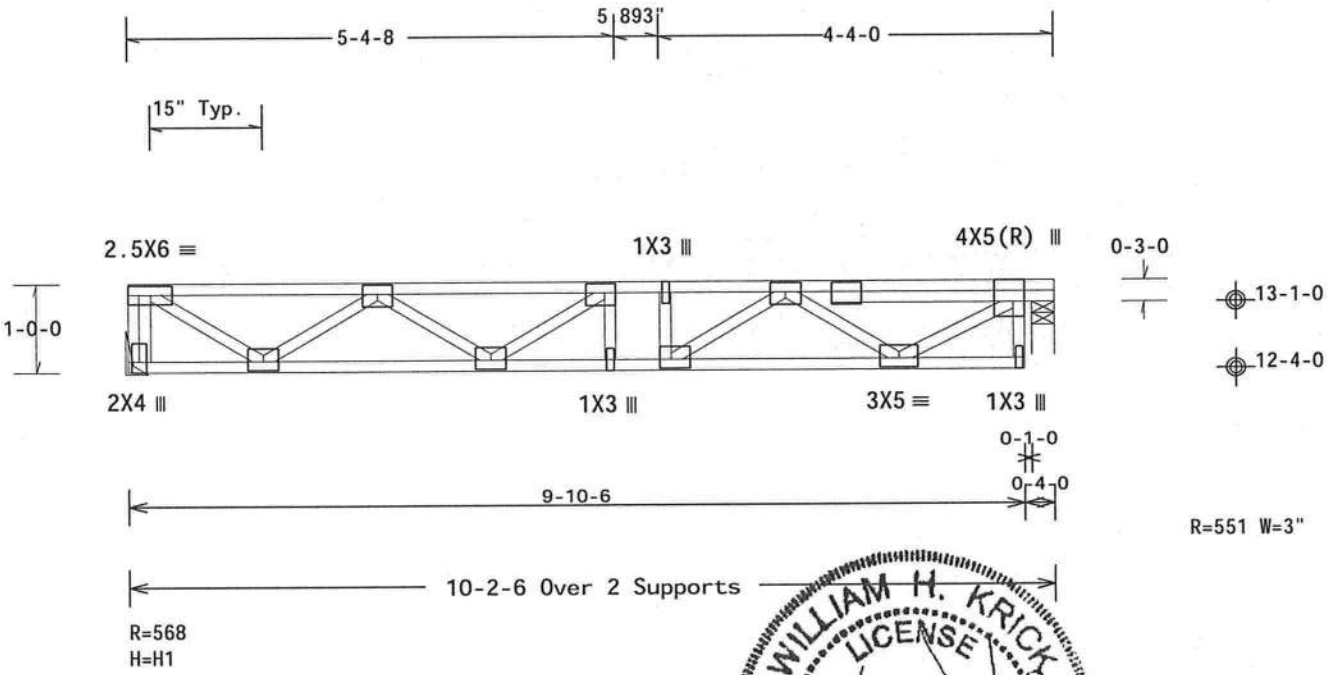

Note: All Plates Are 3X4 Except As Shown.

Design Crit: FBC2010Res/TPI-2007(STD)

PLT TYP. Wave

FT/RT=12%(0%)/10(0)

10.03.11.02.09.19 QTY 2

FL/-/5/-/-/R/-

Scale =.5"/Ft.

WILLIAM H. KRICK LICENSE No. 70861 STATE OF FLORIDA PROFESSIONAL ENGINEER

01/22/2013

ALPINE
ITW Building Components Group Inc.
Haines City, FL 33844
FL COA #0 278

WARNING READ AND FOLLOW ALL NOTES ON THIS SHEET!
IMPORTANT FURNISH THIS DESIGN TO ALL CONTRACTORS INCLUDING INSTALLERS.

Trusses require extreme care in fabricating, handling, shipping, installing and bracing. Refer to and follow the latest edition of BCSI (Building Component Safety Information, by TPI and WTCA) for general practices prior to performing these functions. Installers shall provide temporary bracing per BCSI. Unless noted otherwise, top chord shall have properly attached structural sheathing and bottom chord shall have a properly attached rigid ceiling. Locations shown for permanent lateral restraint of webs shall have bracing installed per BCSI sections B3, B7 or B10, as applicable.

ITW Building Components Group Inc. (ITWBCG) shall not be responsible for any deviation from this design, any failure to build the truss in conformance with ANSI/TPI 1, or for handling, shipping, installation & bracing of trusses. Apply plates to each face of truss and position as shown above and on the Joint Details, unless noted otherwise. Refer to drawings 160A-Z for standard plate positions. A seal on this drawing or cover page listing this drawing, indicates acceptance of professional engineering responsibility solely for the design shown. The suitability and use of this design for any structure is the responsibility of the Building Designer per ANSI/TPI 1 Sec.2. For more information see: This job's general notes page; ITW-BCG: www.itwbcg.com; TPI: www.tpinst.org; WTCA: www.sbcindustry.com; ICC: www.iccsafe.org

TC LL	40.0 PSF	REF	R9114- 81557
TC DL	10.0 PSF	DATE	01/21/13
BC DL	5.0 PSF	DRW	HCUSR9114 13021227
BC LL	0.0 PSF	HC-ENG	JB/AP
TOT.LD.	55.0 PSF	SEQN-	46846
DUR.FAC.	1.00	FROM	SDY
SPACING	24.0"	JREF-	1UT39114Z03

(120912F--Anderson Truss Co. Patel Residence -- Lot 1 Hills Of Windsor , ** - F93)

Top chord 4x2 SP_#1_12A
Bot chord 4x2 SP_#1_12A
Webs 4x2 SP_#3__12A

Lumber grades designated with "12A" use design values approved 1/5/2012 by ALSC.

Truss must be installed as shown with top chord up.

+ 2x6 continuous strongback. See detail STRBRIBR0211 for bracing and bridging recommendations.

(H1) = (J) Hanger not calculated Unavailable supporting member.

Deflection meets L/360 live and L/240 total load. Creep increase factor for dead load is 1.50.

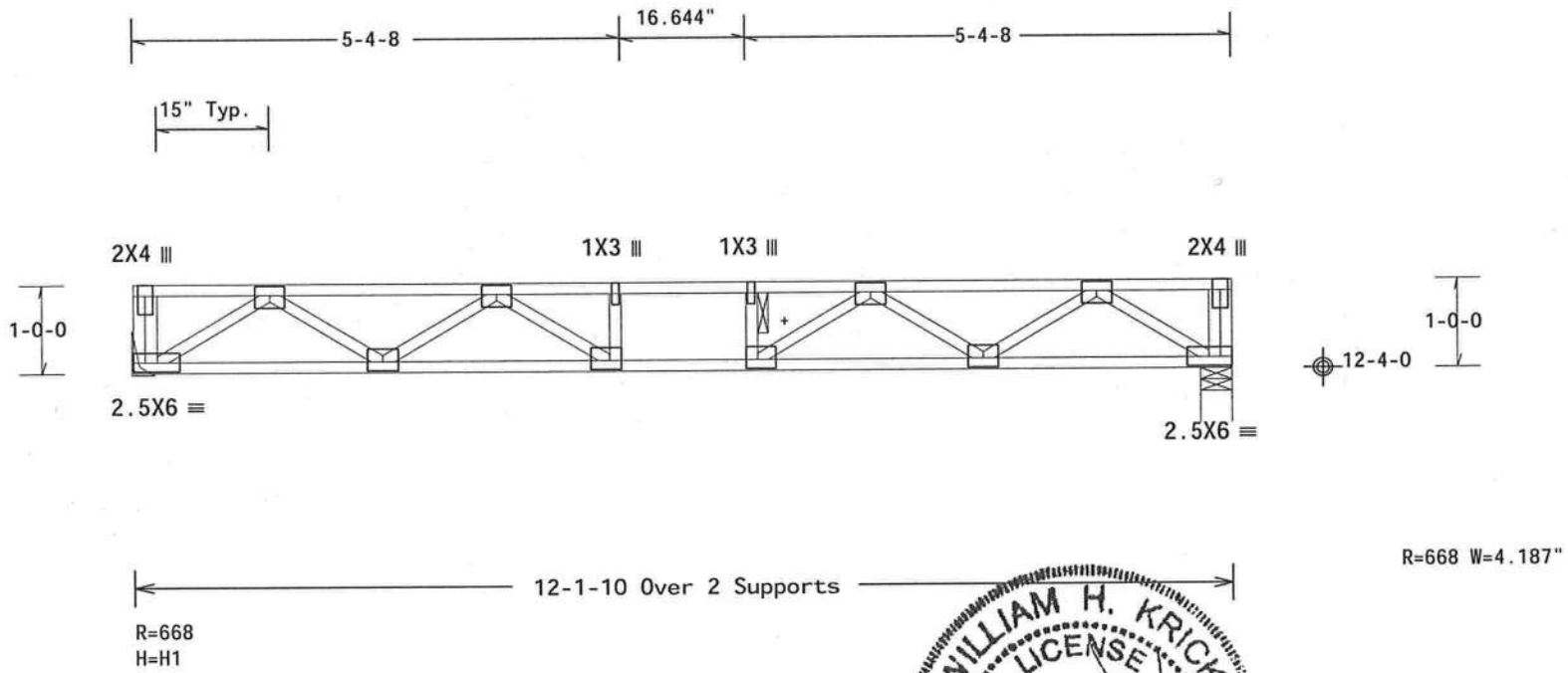

Note: All Plates Are 3X4 Except As Shown.

Design Crit: FBC2010Res/TPI-2007(STD)

PLT TYP. Wave

FT/RT=12%(0%)/10(0) 10.03.11.0209.19 QTY:2 FL/-/5/-/-/R/- Scale =.5"/Ft.

WILLIAM H. KRICK LICENSE No. 70861 STATE OF FLORIDA PROFESSIONAL ENGINEER

01/22/2013

ALPINE
ITW Building Components Group Inc.
Haines City, FL 33844
FL COA #0 278

WARNING READ AND FOLLOW ALL NOTES ON THIS SHEET!
IMPORTANT FURNISH THIS DESIGN TO ALL CONTRACTORS INCLUDING INSTALLERS.

Trusses require extreme care in fabricating, handling, shipping, installing and bracing. Refer to and follow the latest edition of BCSI (Building Component Safety Information, by TPI and WTCA) for safety practices prior to performing these functions. Installers shall provide temporary bracing per BCSI. Unless noted otherwise, top chord shall have properly attached structural sheathing and bottom chord shall have a properly attached rigid ceiling. Locations shown for permanent lateral restraint of webs shall have bracing installed per BCSI sections B3, B7 or B10, as applicable.

ITW Building Components Group Inc. (ITWBCG) shall not be responsible for any deviation from this design, any failure to build the truss in conformance with ANSI/TPI 1, or for handling, shipping, installation and bracing of trusses. Apply plates to each face of truss and position as shown above and on the Joint Details, unless noted otherwise. Refer to drawings 160A-Z for standard plate positions. A seal on this drawing or cover page listing this drawing, indicates acceptance of professional engineering responsibility solely for the design shown. The suitability and use of this design for any structure is the responsibility of the Building Designer per ANSI/TPI 1 Sec.2. For more information see: This job's general notes page; ITW-BCG: www.itwbcg.com; TPI: www.tpinst.org; WTCA: www.sbcindustry.com; ICC: www.iccsafe.org

TC LL	40.0 PSF	REF	R9114- 81558
TC DL	10.0 PSF	DATE	01/21/13
BC DL	5.0 PSF	DRW	HCUSR9114 13021228
BC LL	0.0 PSF	HC-ENG	JB/AP
TOT.LD.	55.0 PSF	SEQN-	46847
DUR.FAC.	1.00	FROM	SDY
SPACING	24.0"	JREF-	1UT39114Z03

THIS DWG PREPARED FROM COMPUTER INPUT (LOADS & DIMENSIONS) SUBMITTED BY TRUSS MFR.

(120912F--Anderson Truss Co. Patel Residence -- Lot 1 Hills Of Windsor , ** - F94)

Top chord 4x2 SP_#1_12A
Bot chord 4x2 SP_#1_12A
Webs 4x2 SP_#3__12A

Lumber grades designated with "12A" use design values approved 1/5/2012 by ALSC.

Truss must be installed as shown with top chord up.

See detail STRBRIBR0211 for bracing and bridging recommendations.

(H1) = (J) Hanger not calculated Unavailable supporting member.

Deflection meets L/360 live and L/240 total load. Creep increase factor for dead load is 1.50.

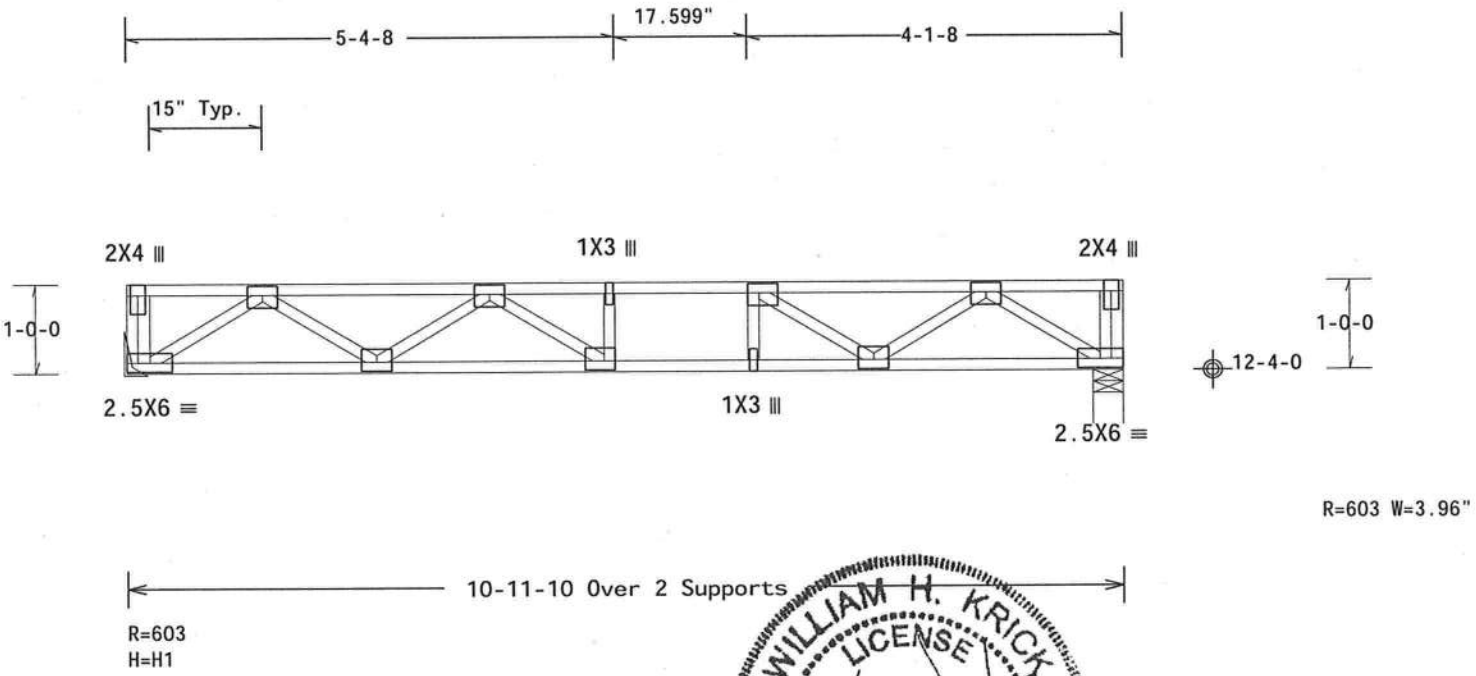

Note: All Plates Are 3X4 Except As Shown.

Design Crit: FBC2010Res/TPI-2007(STD)

PLT TYP. Wave

FT/RT=12%(0%)/10(0) 10.03.11.0209.19 QTY:2 FL/-/5/-/-/R/- Scale =.5"/Ft.

WILLIAM H. KRICK LICENSE No. 70861 STATE OF FLORIDA PROFESSIONAL ENGINEER

01/22/2013

ALPINE
ITW Building Components Group Inc.
Haines City, FL 33844
FL COA #0 278

WARNING READ AND FOLLOW ALL NOTES ON THIS SHEET!
IMPORTANT FURNISH THIS DESIGN TO ALL CONTRACTORS INCLUDING INSTALLERS.

Trusses require extreme care in fabricating, handling, shipping, installing and bracing. Refer to and follow the latest edition of BCSI (Building Component Safety Information, by TPI and WTCA) for standard practices prior to performing these functions. Installers shall provide temporary bracing per BCSI. Unless noted otherwise, top chord shall have properly attached structural sheathing and bottom chord shall have a properly attached rigid ceiling. Locations shown for permanent lateral restraint of webs shall have bracing installed per BCSI sections B3, B7 or B10, as applicable.

ITW Building Components Group Inc. (ITWBCG) shall not be responsible for any deviation from this design, any failure to build the truss in conformance with ANSI/TPI 1, or for handling, shipping, installation & bracing of trusses. Apply plates to each face of truss and position as shown above and on the Joint Details, unless noted otherwise. Refer to drawings 160A-Z for standard plate positions. A seal on this drawing or cover page listing this drawing, indicates acceptance of professional engineering responsibility solely for the design shown. The suitability and use of this design for any structure is the responsibility of the Building Designer per ANSI/TPI 1 Sec.2. For more information see: This job's general notes page; ITW-BCG: www.itwbcg.com; TPI: www.tpinst.org; WTCA: www.sbcindustry.com; ICC: www.iccsafe.org

TC LL	40.0 PSF	REF	R9114- 81559
TC DL	10.0 PSF	DATE	01/21/13
BC DL	5.0 PSF	DRW	HCUSR9114 13021229
BC LL	0.0 PSF	HC-ENG	JB/AP
TOT.LD.	55.0 PSF	SEQN-	46848
DUR.FAC.	1.00	FROM	SDY
SPACING	24.0"	JREF-	1UT39114Z03

(120912F--Anderson Truss Co. Patel Residence -- Lot 1 Hills Of Windsor , ** - F95)

Top chord 4x2 SP_#1_12A
Bot chord 4x2 SP_#1_12A
Webs 4x2 SP_#3__12A

Lumber grades designated with "12A" use design values approved 1/5/2012 by ALSC.

Truss must be installed as shown with top chord up.

See detail STRBRIBR0211 for bracing and bridging recommendations.

(H1) = (J) Hanger not calculated Unavailable supporting member.

Deflection meets L/360 live and L/240 total load. Creep increase factor for dead load is 1.50.

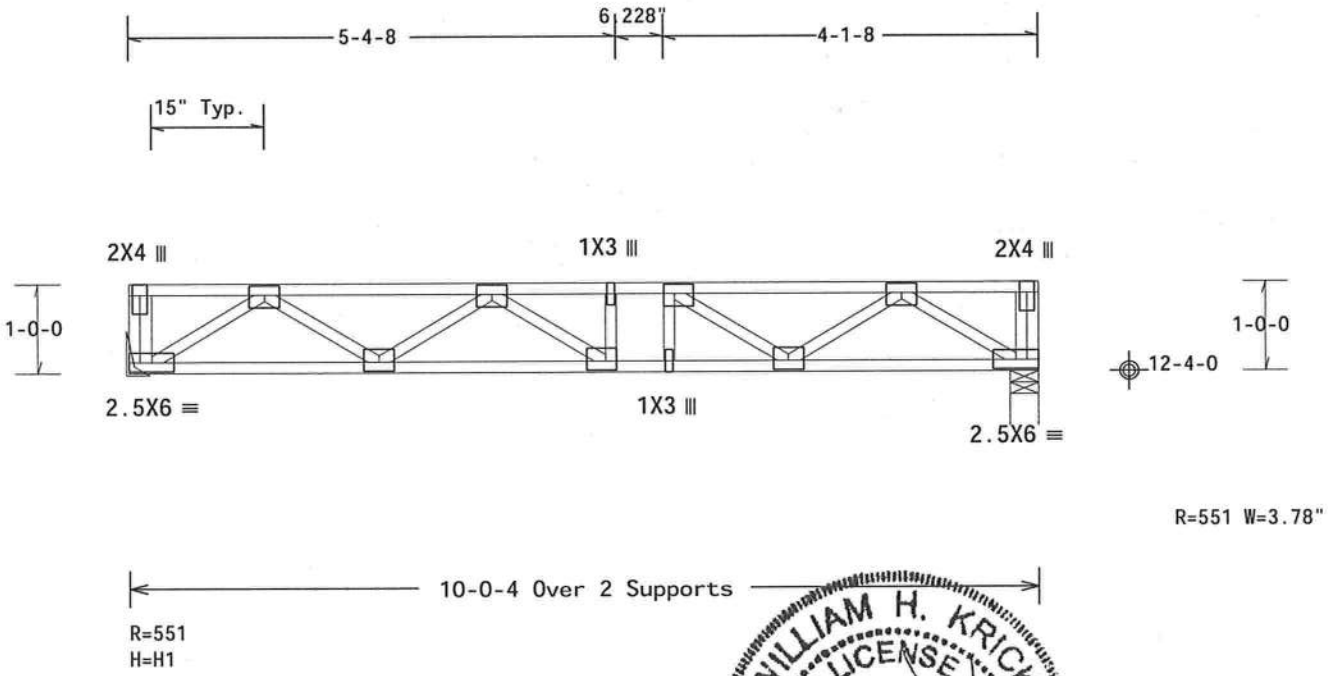

Note: All Plates Are 3X4 Except As Shown.

Design Crit: FBC2010Res/TPI-2007(SPD)

PLT TYP. Wave

FT/RT=12%(0%)/10(0) 10.03.11.0209 19 QTY:2 FL/-/5/-/-/R/- Scale =.5"/Ft.

WILLIAM H. KRICK LICENSE No 70861 STATE OF FLORIDA PROFESSIONAL ENGINEER

01/22/2013

ALPINE
ITW Building Components Group Inc.
Haines City, FL 33844
FL COA #0 278

WARNING READ AND FOLLOW ALL NOTES ON THIS SHEET!
IMPORTANT FURNISH THIS DESIGN TO ALL CONTRACTORS INCLUDING INSTALLERS.

Trusses require extreme care in fabricating, handling, shipping, installing and bracing. Refer to and follow the latest edition of BCSI (Building Component Safety Information, by TPI and WTCA) for safety practices prior to performing these functions. Installers shall provide temporary bracing per BCSI. Unless noted otherwise, top chord shall have properly attached structural sheathing and bottom chord shall have a properly attached rigid ceiling. Locations shown for permanent lateral restraint of webs shall have bracing installed per BCSI sections B3, B7 or B10, as applicable.

ITW Building Components Group Inc. (ITWBCG) shall not be responsible for any deviation from this design, any failure to build the truss in conformance with ANSI/TPI 1, or for handling, shipping, installation and bracing of trusses. Apply plates to each face of truss and position as shown above and on the Joint Details, unless noted otherwise. Refer to drawings 160A-Z for standard plate positions. A seal on this drawing or cover page listing this drawing, indicates acceptance of professional engineering responsibility solely for the design shown. The suitability and use of this design for any structure is the responsibility of the Building Designer per ANSI/TPI 1 Sec.2. For more information see: This job's general notes page; ITW-BCG: www.itwbcg.com; TPI: www.tpinst.org; WTCA: www.sbcindustry.com; ICC: www.iccsafe.org

TC LL	40.0 PSF	REF	R9114- 81560
TC DL	10.0 PSF	DATE	01/21/13
BC DL	5.0 PSF	DRW	HCUSR9114 13021230
BC LL	0.0 PSF	HC-ENG	JB/AP
TOT.LD.	55.0 PSF	SEQN-	46849
DUR.FAC.	1.00	FROM	SDY
SPACING	24.0"	JREF-	1UT39114Z03

(120912F--Anderson Truss Co. Patel Residence -- Lot 1 Hills Of Windsor , ** - F96)

Top chord 4x2 SP_#1_12A
Bot chord 4x2 SP_#1_12A
Webs 4x2 SP_#3__12A

Lumber grades designated with "12A" use design values approved 1/5/2012 by ALSC.

(H1) = (J) Hanger not calculated Unavailable supporting member.

Deflection meets L/360 live and L/240 total load. Creep increase factor for dead load is 1.50.

Truss must be installed as shown with top chord up.

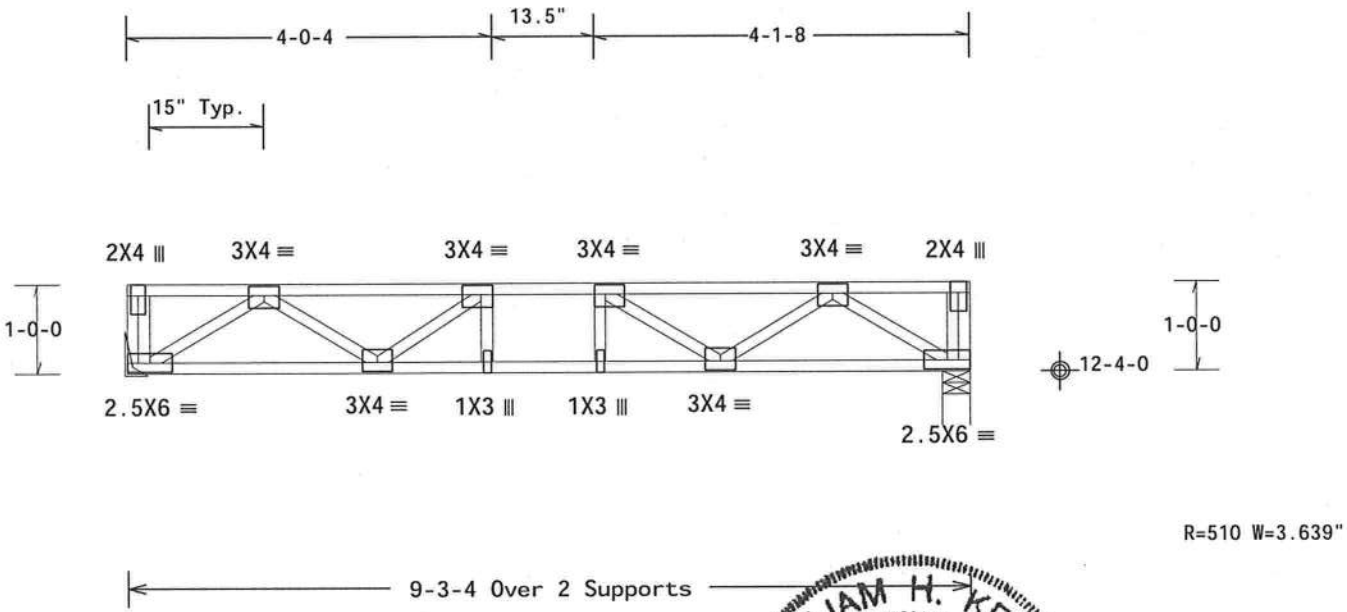

Design Crit: FBC2010Res/TPI-2007(STD)
FT/RT=12%(0%)/10(0)

PLT TYP. Wave

10.03.11.02.09.19 QTY:2

FL/-/5/-/-/R/-

Scale =.5"/Ft.

WILLIAM H. KRICK
LICENSE
No. 70861
STATE OF FLORIDA
PROFESSIONAL ENGINEER
01/22/2013

ALPINE
ITW Building Components Group Inc.
Haines City, FL 33844
FL COA #0 278

WARNING READ AND FOLLOW ALL NOTES ON THIS SHEET!
IMPORTANT FURNISH THIS DESIGN TO ALL CONTRACTORS INCLUDING INSTALLERS.

Trusses require extreme care in fabricating, handling, shipping, installing and bracing. Refer to and follow the latest edition of BCSI (Building Component Safety Information, by TPI and WTCA) for standard practices prior to performing these functions. Installers shall provide temporary bracing per BCSI. Unless noted otherwise, top chord shall have properly attached structural sheathing and bottom chord shall have a properly attached rigid ceiling. Locations shown for permanent lateral restraint of webs shall have bracing installed per BCSI sections B3, B7 or B10, as applicable.

ITW Building Components Group Inc. (ITWBCG) shall not be responsible for any deviation from this design, any failure to build the truss in conformance with ANSI/TPI 1, or for handling, shipping, installation and bracing of trusses. Apply plates to each face of truss and position as shown above and on the Joint Details, unless noted otherwise. Refer to drawings 160A-Z for standard plate positions. A seal on this drawing or cover page listing this drawing, indicates acceptance of professional engineering responsibility solely for the design shown. The suitability and use of this design for any structure is the responsibility of the Building Designer per ANSI/TPI 1 Sec.2. For more information see: This job's general notes page: ITW-BCG: www.itwbcg.com; TPI: www.tpinst.org; WTCA: www.sbcindustry.com; ICC: www.iccsafe.org

TC LL	40.0 PSF	REF	R9114- 81561
TC DL	10.0 PSF	DATE	01/21/13
BC DL	5.0 PSF	DRW	HCUSR9114 13021231
BC LL	0.0 PSF	HC-ENG	JB/AP
TOT.LD.	55.0 PSF	SEQN-	46850
DUR.FAC.	1.00	FROM	SDY
SPACING	24.0"	JREF-	1UT39114Z03

(120912F--Anderson Truss Co. Patel Residence -- Lot 1 Hills Of Windsor , ** - F97)

Top chord 4x2 SP_#1_12A
Bot chord 4x2 SP_#1_12A
Webs 4x2 SP_#3__12A

Lumber grades designated with "12A" use design values approved 1/5/2012 by ALSC.

(H1) = (J) Hanger not calculated Unavailable supporting member.

Deflection meets L/360 live and L/240 total load. Creep increase factor for dead load is 1.50.

Truss must be installed as shown with top chord up.

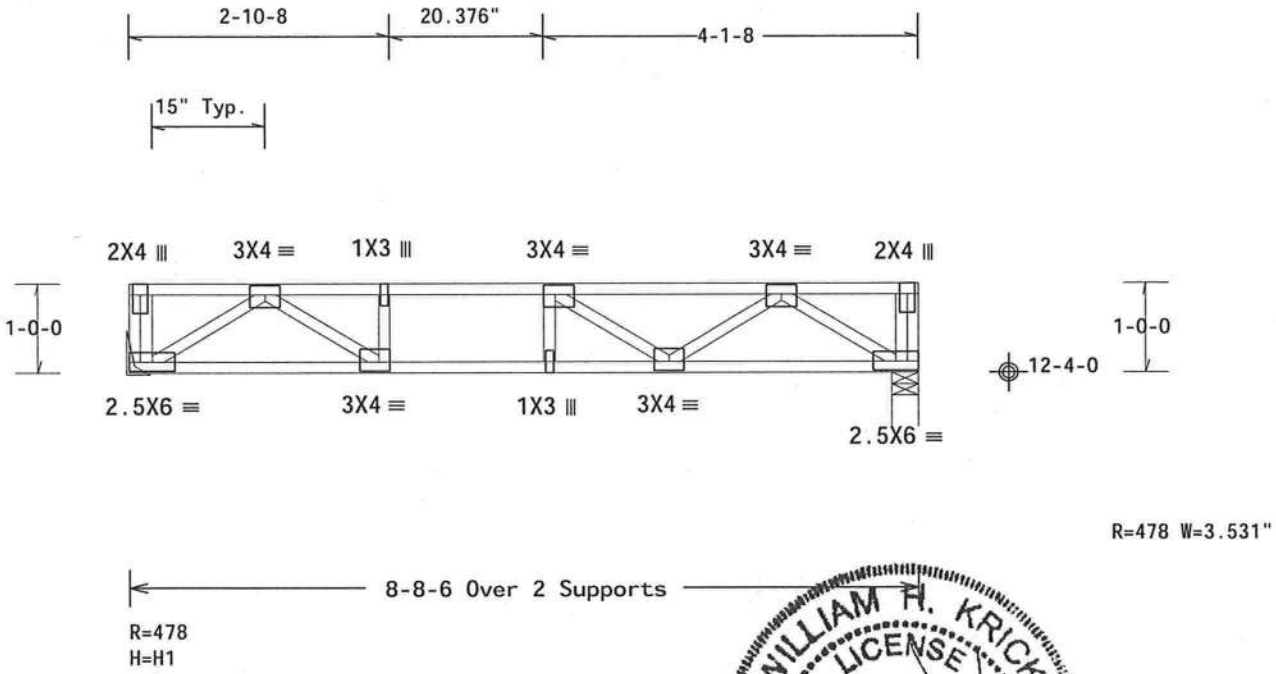

Design Crit: FBC2010Res/TPI-2007(STD)
FT/RT=12%(0%)/10(0) 10.03.11.0209.19 QTY:2 FL/-/5/-/-/R/-

PLT TYP. Wave

Scale =.5"/Ft.

WILLIAM H. KRICK LICENSE No. 70861 STATE OF FLORIDA PROFESSIONAL ENGINEER

01/22/2013

ALPINE
ITW Building Components Group Inc.
Haines City, FL 33844
FL COA #0 278

WARNING READ AND FOLLOW ALL NOTES ON THIS SHEET!
IMPORTANT FURNISH THIS DESIGN TO ALL CONTRACTORS INCLUDING INSTALLERS.

Trusses require extreme care in fabricating, handling, shipping, installing and bracing. Refer to and follow the latest edition of BCSI (Building Component Safety Information, by TPI and WTCA) for safety practices prior to performing these functions. Installers shall provide temporary bracing per BCSI. Unless noted otherwise, top chord shall have properly attached structural sheathing and bottom chord shall have a properly attached rigid ceiling. Locations shown for permanent lateral restraint of webs shall have bracing installed per BCSI sections B3, B7 or B10, as applicable.

ITW Building Components Group Inc. (ITWBCG) shall not be responsible for any deviation from this design, any failure to build the truss in conformance with ANSI/TPI 1, or for handling, shipping, installation and bracing of trusses. Apply plates to each face of truss and position as shown above and on the Joint Details, unless noted otherwise. Refer to drawings 16OA-Z for standard plate positions. A seal on this drawing or cover page listing this drawing, indicates acceptance of professional engineering responsibility solely for the design shown. The suitability and use of this design for any structure is the responsibility of the Building Designer per ANSI/TPI 1 Sec.2. For more information see: This job's general notes page; ITW-BCG: www.itwbcg.com; TPI: www.tpinst.org; WTCA: www.sbcindustry.com; ICC: www.iccsafe.org

TC LL	40.0 PSF	REF	R9114- 81562
TC DL	10.0 PSF	DATE	01/21/13
BC DL	5.0 PSF	DRW	HCUSR9114 13021232
BC LL	0.0 PSF	HC-ENG	JB/AP
TOT.LD.	55.0 PSF	SEQN-	46851
DUR.FAC.	1.00	FROM	SDY
SPACING	24.0"	JREF-	1UT39114Z03

(120912F--Anderson Truss Co. Patel Residence -- Lot 1 Hills Of Windsor , ** - F98)

Top chord 4x2 SP_#1_12A
Bot chord 4x2 SP_#1_12A
Webs 4x2 SP_#3__12A

Lumber grades designated with "12A" use design values approved 1/5/2012 by ALSC.

(H1) = (J) Hanger not calculated Unavailable supporting member.

Deflection meets L/360 live and L/240 total load. Creep increase factor for dead load is 1.50.

Truss must be installed as shown with top chord up.

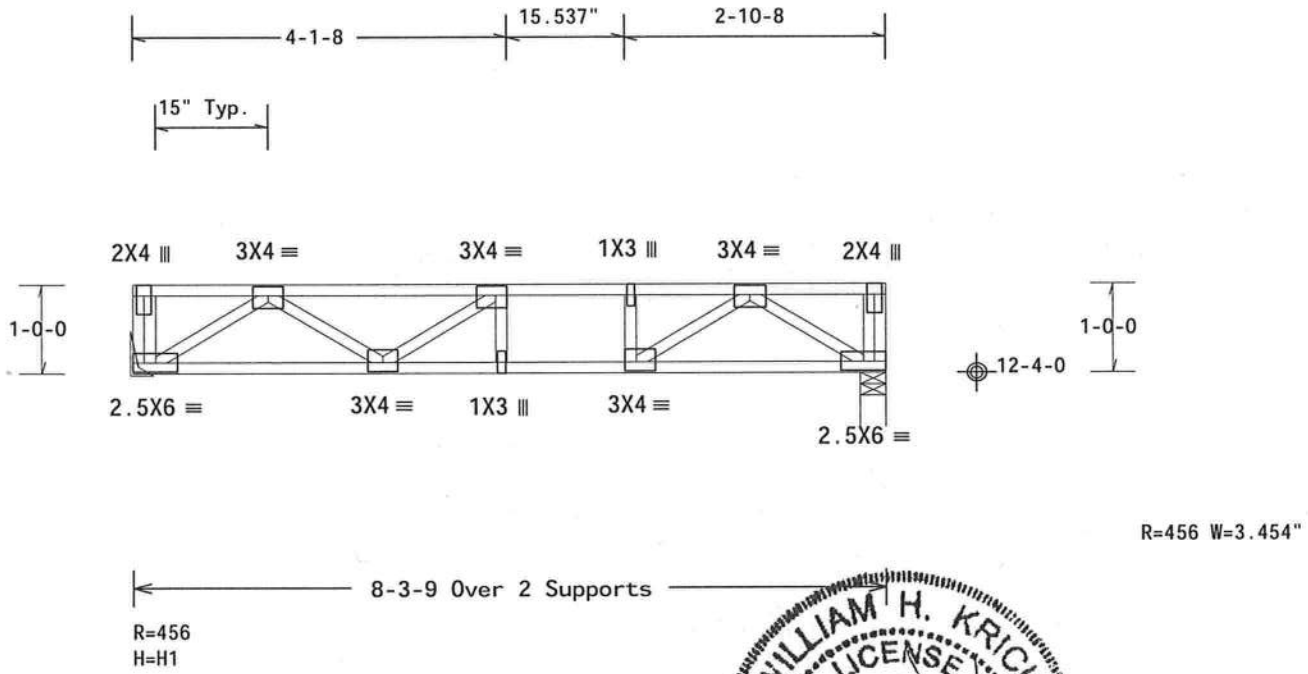

Design Crit: FBC2010Res/TPI-2007(STD)
FT/RT=12%(0%)/10(0) 10.03.11.0209 19 QTY:2 FL/-/5/-/-/R/-

PLT TYP. Wave

Scale =.5"/Ft.

ALPINE
ITW Building Components Group Inc.
Haines City, FL 33844
FL COA #0 278

WARNING READ AND FOLLOW ALL NOTES ON THIS SHEET!
IMPORTANT FURNISH THIS DESIGN TO ALL CONTRACTORS INCLUDING INSTALLERS.

Trusses require extreme care in fabricating, handling, shipping, installing and bracing. Refer to and follow the latest edition of BCSI (Building Component Safety Information, by TPI and WTCA) for safety practices prior to performing these functions. Installers shall provide temporary bracing per BCSI. Unless noted otherwise, top chord shall have properly attached structural sheathing and bottom chord shall have a properly attached rigid ceiling. Locations shown for permanent lateral restraint of webs shall have bracing installed per BCSI sections B3, B7 or B10, as applicable.

ITW Building Components Group Inc. (ITWBCG) shall not be responsible for any deviation from this design, any failure to build the truss in conformance with ANSI/TPI 1, or for handling, shipping, installation & bracing of trusses. Apply plates to each face of truss and position as shown above and on the Joint Details, unless noted otherwise. Refer to drawings 160A-Z for standard plate positions. A seal on this drawing or cover page listing this drawing, indicates acceptance of professional engineering responsibility solely for the design shown. The suitability and use of this design for any structure is the responsibility of the Building Designer per ANSI/TPI 1 Sec.2. For more information see: This job's general notes page; ITW-BCG: www.itwbcg.com; TPI: www.tpinst.org; WTCA: www.sbcindustry.com; ICC: www.iccsafe.org

WILLIAM H. KRICK
LICENSE
No. 70861
STATE OF FLORIDA
PROFESSIONAL ENGINEER

01/22/2013

TC LL	40.0 PSF	REF	R9114- 81563
TC DL	10.0 PSF	DATE	01/21/13
BC DL	5.0 PSF	DRW	HCUSR9114 13021233
BC LL	0.0 PSF	HC-ENG	JB/AP
TOT.LD.	55.0 PSF	SEQN-	46852
DUR.FAC.	1.00	FROM	SDY
SPACING	24.0"	JREF-	1UT39114Z03

(120912F--Anderson Truss Co. Patel Residence -- Lot 1 Hills Of Windsor , ** - F99)

Top chord 4x2 SP_#1_12A
Bot chord 4x2 SP_#1_12A
Webs 4x2 SP_#3__12A

Lumber grades designated with "12A" use design values approved 1/5/2012 by ALSC.

(H1) = (J) Hanger not calculated Unavailable supporting member.

Deflection meets L/360 live and L/240 total load. Creep increase factor for dead load is 1.50.

Truss must be installed as shown with top chord up.

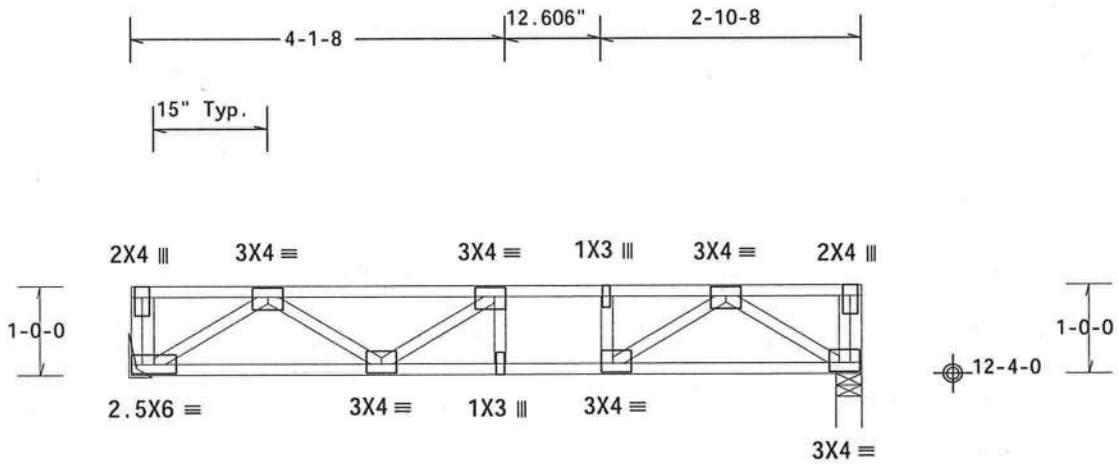

R=443 W=3.403"

8-0-10 Over 2 Supports

R=443
H=H1

Design Crit: FBC2010Res/TPI-2007(STD)
FT/RT=12%(0%)/10(0)

10.03.11.0209.19 QTY:2 FL/-/5/-/-/R/-

PLT TYP. Wave

Scale =.5"/Ft.

WILLIAM H. KRICK LICENSE No. 70861 STATE OF FLORIDA PROFESSIONAL ENGINEER

01/22/2013

ALPINE
ITW Building Components Group Inc.
Haines City, FL 33844
FL COA #0 278

WARNING READ AND FOLLOW ALL NOTES ON THIS SHEET!
IMPORTANT FURNISH THIS DESIGN TO ALL CONTRACTORS INCLUDING INSTALLERS.

Trusses require extreme care in fabricating, handling, shipping, installing and bracing. Refer to and follow the latest edition of BCSI (Building Component Safety Information, by TPI and WTCA) for safety practices prior to performing these functions. Installers shall provide temporary bracing per BCSI. Unless noted otherwise, top chord shall have properly attached structural sheathing and bottom chord shall have a properly attached rigid ceiling. Locations shown for permanent lateral restraint of webs shall have bracing installed per BCSI sections B3, B7 or B10, as applicable.

ITW Building Components Group Inc. (ITWBCG) shall not be responsible for any deviation from this design, any failure to build the truss in conformance with ANSI/TPI 1, or for handling, shipping, installation and bracing of trusses. Apply plates to each face of truss and position as shown above and on the Joint Details, unless noted otherwise. Refer to drawings 160A-Z for standard plate positions. A seal on this drawing or cover page listing this drawing, indicates acceptance of professional engineering responsibility solely for the design shown. The suitability and use of this design for any structure is the responsibility of the Building Designer per ANSI/TPI 1 Sec.2. For more information see: This job's general notes page; ITW-BCG: www.itwbcg.com; TPI: www.tpinst.org; WTCA: www.sbcindustry.com; ICC: www.iccsafe.org

TC LL	40.0 PSF	REF	R9114- 81564
TC DL	10.0 PSF	DATE	01/21/13
BC DL	5.0 PSF	DRW	HCUSR9114 13021234
BC LL	0.0 PSF	HC-ENG	JB/AP
TOT.LD.	55.0 PSF	SEQN-	46853
DUR.FAC.	1.00	FROM	SDY
SPACING	24.0"	JREF-	1UT39114Z03

(120912F--Anderson Truss Co. Patel Residence -- Lot 1 Hills Of Windsor , ** - F100)

Top chord 4x2 SP_#1_12A
Bot chord 4x2 SP_#1_12A
Webs 4x2 SP_#3__12A

Lumber grades designated with "12A" use design values approved 1/5/2012 by ALSC.

(H1) = (J) Hanger not calculated Unavailable supporting member.

Deflection meets L/360 live and L/240 total load. Creep increase factor for dead load is 1.50.

Truss must be installed as shown with top chord up.

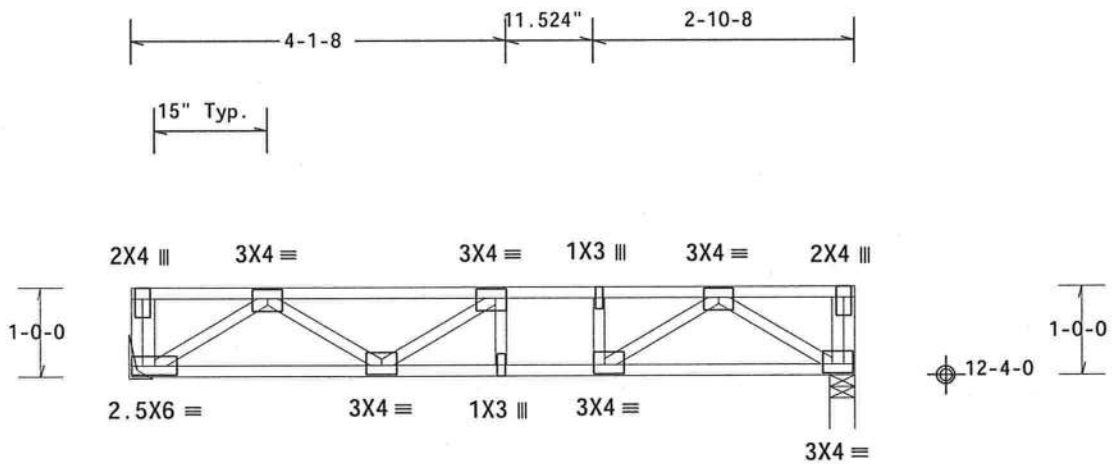

7-11-8 Over 2 Supports

R=438 W=3.378"

R=438
H=H1

Design Crit: FBC2010Res/TPI-2007(STD)
FT/RT=12%(0%)/10(0)

PLT TYP. Wave

10.03.11.02.09.19 QTY 2

FL/-/5/-/-/R/-

Scale =.5"/Ft.

WILLIAM H. KRICK
LICENSE
No. 70861
STATE OF FLORIDA
PROFESSIONAL ENGINEER
01/22/2013

ALPINE
ITW Building Components Group Inc.
Haines City, FL 33844
FL COA #0 278

WARNING READ AND FOLLOW ALL NOTES ON THIS SHEET!
IMPORTANT FURNISH THIS DESIGN TO ALL CONTRACTORS INCLUDING INSTALLERS.

Trusses require extreme care in fabricating, handling, shipping, installing and bracing. Refer to and follow the latest edition of BCSI (Building Component Safety Information, by TPI and WTCA) for safe practices prior to performing these functions. Installers shall provide temporary bracing per BCSI. Unless noted otherwise, top chord shall have properly attached structural sheathing and bottom chord shall have a properly attached rigid ceiling. Locations shown for permanent lateral restraint of webs shall have bracing installed per BCSI sections B3, B7 or B10, as applicable.

ITW Building Components Group Inc. (ITWBCG) shall not be responsible for any deviation from this design, any failure to build the truss in conformance with ANSI/TPI 1, or for handling, shipping, installation & bracing of trusses. Apply plates to each face of truss and position as shown above and on the Joint Details, unless noted otherwise. Refer to drawings 160A-Z for standard plate positions. A seal on this drawing or cover page listing this drawing, indicates acceptance of professional engineering responsibility solely for the design shown. The suitability and use of this design for any structure is the responsibility of the Building Designer per ANSI/TPI 1 Sec.2. For more information see: This job's general notes page; ITW-BCG: www.itwbcg.com; TPI: www.tpinst.org; WTCA: www.sbcindustry.com; ICC: www.iccsafe.org

TC LL	40.0 PSF	REF	R9114- 81565
TC DL	10.0 PSF	DATE	01/21/13
BC DL	5.0 PSF	DRW	HCUSR9114 13021235
BC LL	0.0 PSF	HC-ENG	JB/AP
TOT.LD.	55.0 PSF	SEQN-	46854
DUR.FAC.	1.00	FROM	SDY
SPACING	24.0"	JREF-	1UT39114Z03

STRONGBACK BRIDGING RECOMMENDATIONS

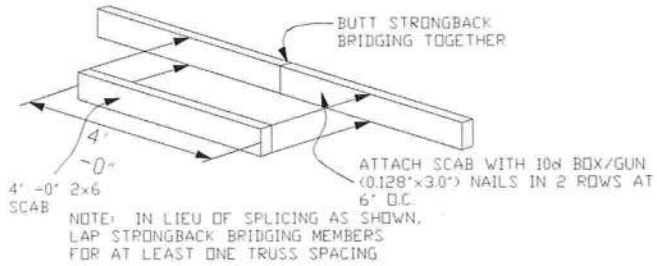

STRONGBACK BRIDGING SPLICE DETAIL

NOTE: Details 1 and 2 are the preferred attachment methods

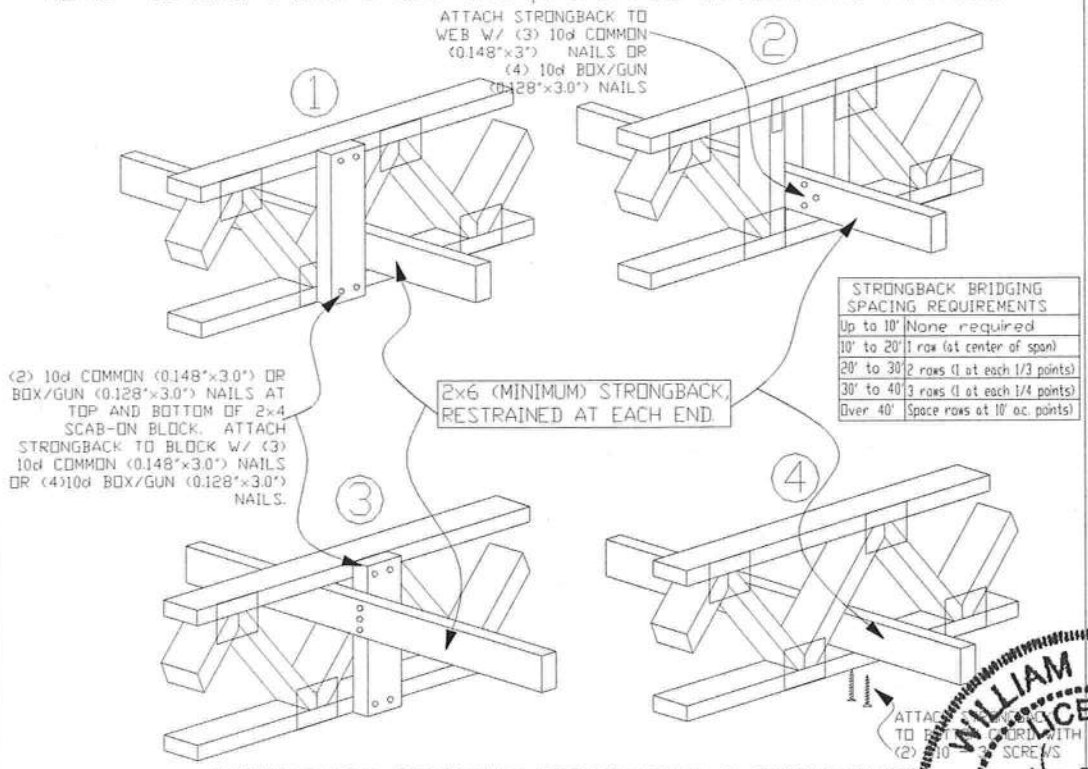

STRONGBACK BRIDGING SPACING REQUIREMENTS	
Up to 10'	None required
10' to 20'	1 row (at center of span)
20' to 30'	2 rows (1 at each 1/3 points)
30' to 40'	3 rows (1 at each 1/4 points)
Over 40'	Space rows at 10' o.c. points)

STRONGBACK BRIDGING ATTACHMENT ALTERNATIVES

- All scab-on blocks shall be a minimum 2x4 "stress graded lumber."
- All strongback bridging and bracing shall be a minimum 2x6 "stress graded lumber."
- The purpose of strongback bridging is to develop load sharing between individual trusses, resulting in an overall increase in the stiffness of the floor system. 2x6 strongback bridging, positioned as shown in details, is recommended at 10' -0" o.c. (max.)

The terms "bridging" and "bracing" are sometimes mistakenly used interchangeably. "Bracing" is an important structural requirement of any floor or roof system. Refer to the Truss Design Drawing (TDD) for the bracing requirements for each individual truss component. "Bridging," particularly "strongback bridging" is a recommendation for a truss system to help control vibration. In addition to aiding in the distribution of point loads between adjacent truss, strongback bridging serves to reduce "bounce" or residual vibration resulting from moving point loads, such as footsteps.

The performance of all floor systems are enhanced by the installation of strongback bridging and therefore is strongly recommended by ITW Building Compents Group Inc.

For additional information regarding strongback bridging, refer to BCSI (Building Component Safety Information).

WILLIAM H. KRICK
LICENSE
No. 70861
STATE OF FLORIDA
PROFESSIONAL ENGINEER
01/22/2013
Jan 22 '13

ITW Building Components Group Inc.

Earth City, MO 63045

WARNING READ AND FOLLOW ALL NOTES ON THIS SHEET!
Trusses require extreme care in fabricating, handling, shipping, installing and bracing. Refer to and follow BCSI (Building Component Safety Information, by TPI and WTCA) for safety practices prior to performing these functions. Installers shall provide temporary bracing per BCSI. Unless noted otherwise, top chord shall have properly attached structural panels and bottom chord shall have properly attached rigid ceiling. Locations shown for permanent lateral restraint of webs shall be bracing installed per BCSI sections B3 & B7. See this job's general notes page for more information.

IMPORTANT FURNISH COPY OF THIS DESIGN TO INSTALLATION CONTRACTOR.
ITW Building Components Group Inc. (ITWBCG) shall not be responsible for any deviation from this design, any failure to build the truss in conformance with TPI, or fabricating, handling, shipping, installing & bracing of trusses. ITWBCG connector plates are made of 20/18/16GA (W,H/S/K) ASTM A653 grade 37/40/60 (K/W/H,S) galv. steel. Apply plates to each face of truss, positioned as shown above and on Joint Details.
A seal on this drawing or cover page indicates acceptance and professional engineering responsibility solely for the truss component design shown. The suitability and use of this component for any building is the responsibility of the Building Designer per ANSI/TPI 1 Sec. 2.
ITW-BCG: www.itwbcg.com; TPI: www.tpinst.com; WTCA: www.sbcindustry.com; ICC: www.iccsafe.org

TC LL	PSF	REF STRONGBACK
TC DL	PSF	DATE 2/28/11
BC DL	PSF	DRWG STRBRIBR0211
BC LL	PSF	
TOT. LD.	PSF	
DUR. FAC.	1.00	
SPACING		

SYSTEM 42 PLY TO PLY CONNECTION DETAIL

USING SIMPSON 1/4" × 6" STRONG DRIVE SCREWS OR EQUAL.

REFER TO ITWBCG SEALED DRAWING FOR INDIVIDUAL TRUSS DESIGN.

MAX. CONCENTRATED LOAD AS PER CHART BELOW

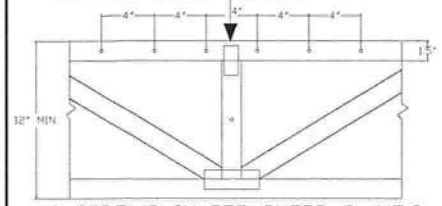

-6 SCREWS IN TOP CHORD @ 4"O.C.
-SCREWS IN VERTICAL WEB @ 4"O.C. AND 3" END DISTANCE

LOAD APPLIED TO THIS PLY

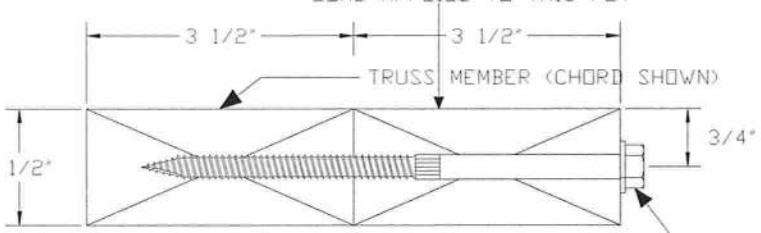

SCREW POSITION IN THE TRUSS

STRONG-DRIVE SCREW

MAX. UNIFORM LOAD AS PER CHART BELOW

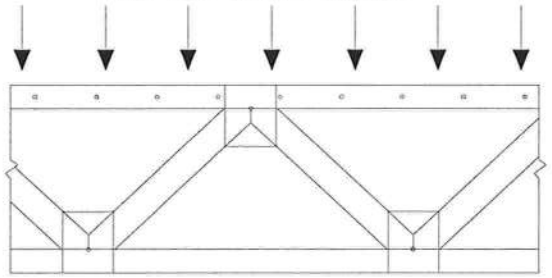

TOP CHORD SCREW SPACING PER CHART BELOW (FOR SINGLE TOP CHORD ONLY)

FOR DOUBLE TOP CHORDS
USE (4) SCREWS IN UPPER TOP CHORD
USE (2) SCREWS IN LOWER TOP CHORD

MAX. CONCENTRATED LOAD AS PER CHART BELOW

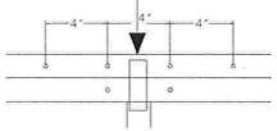

SCREWS CAN BE EQUALLY DIVIDED (ROUND UP TO THE NEAREST WHOLE NUMBER) INTO MULTIPLE VERTICALS. USE A MINIMUM OF (1) SCREW PER VERTICAL.

GENERAL NOTES:
1. SCREWS CENTERED ALONG THE 1.5" DIMENSION OF THE 4×2 MEMBER.
2. MINIMUM END DISTANCE OF 3"
3. SCREWS INSTALLED WITH HEAD IN LOADED MEMBER.
4. GAP BETWEEN PLIES NOT TO EXCEED 1/8".
5. HOLES NOT ALLOWED THRU A METAL CONNECTOR PLATE
6. SCREW LOCATION MAY BE ADJUSTED UP TO 1" TO AVOID CONFLICT WITH OTHER HARDWARE OR TO AVOID LUMBER DEFECTS.
7. DO NOT INSTALL SCREWS IN AREAS WHERE LUMBER WANE EXCEEDS 1/4"
8. CONCENTRATED LOADS TO BE APPLIED AT TRUSS PANEL POINT WITH VERTICAL WEB.
9. FLOOR SHEATHING IS ASSUMED TO BE SECURELY FASTENED TO EACH TRUSS TOP CHORD.
10. FOR 3×2 MEMBERS USE SIMPSON'S 1/4"×4.5" SDS SCREWS OR EQUAL.
11. CONTACT ITWBCG FOR SPECIAL CONNECTIONS NOT COVERED BY THIS DETAIL.

UNIFORM LOADS
FOR DOUBLE TOP CHORD THE TOP CHORD SCREW O.C. SPACING MAY BE DOUBLED. (BUT MAY NOT EXCEED 24" O.C. PER CHORD) SCREW SPACING SHALL BE OFFSET BY 1/2 THE O.C. SPACING IN EACH CHORD.

TRUSS DEPTH (INCH)	# OF SCREWS IN VERTICAL WEB	MAXIMUM CONCENTRATED LOAD (LBS)	
		DFL&SP	SPF
12	1	3360	2800
14	2	3840	3200
16	2	3840	3200
18	4	4320	3600
20	4	4320	3600
22	5	4800	4000
24	5	4800	4000

TOP CHORD SCREW O.C. SPACING (INCH)	MAXIMUM UNIFORM LOAD (PLF) ALONG TOP CHORD (1.00 DF)	
	DFL&SP	SPF
4	1440	1200
6	960	800
8	720	600
10	576	480
12	480	400
14	411	342
16	360	300
18	320	266
20	288	240
22	261	218
24	240	200

WILLIAM H. KRICK
LICENSE
No. 70861
STATE OF FLORIDA
PROFESSIONAL ENGINEER

01/22/2013
Jan 22 '13

TW
Building Components Group Inc.

Earth City, MO 63045

WARNING READ AND FOLLOW ALL NOTES ON THIS SHEET!
Trusses require extreme care in fabricating, handling, shipping, installing and bracing. Refer to, and follow BCSI (Building Component Safety Information, by TPI and WTCA) for safety practices prior to performing these functions. Installers shall provide temporary bracing per BCSI. Unless stated otherwise, top chord shall have properly attached structural panels and bottom chord shall have properly attached rigid ceiling. Locations shown for permanent lateral restraint of webs shall have bracing installed per BCSI sections B3 & B7. See this job's general notes page for more information.

IMPORTANT FURNISH COPY OF THIS DESIGN TO INSTALLATION CONTRACTOR.
ITW Building Components Group Inc. (ITWBCG) shall not be responsible for any deviation from this design, any failure to build the truss in conformance with TPI, or fabricating, handling, shipping, installing & bracing of trusses. ITWBCG connector plates are made of 20/18/16GA (W,H/S/K) ASTM A653 grade 37/40/60 (K/W/H,S) galv. steel. Apply plates to each face of truss, positioned as shown above and on Joint Details.
A seal on this drawing or cover page indicates acceptance and professional engineering responsibility solely for the truss component design shown. The suitability and use of this component for any building is the responsibility of the Building Designer per ANSI/TPI 1 Sec. 2.
ITW-BCG: www.itwbcg.com; TPI: www.tpinst.com; WTCA: www.sbcindustry.com; ICC: www.iccsafe.org

TC LL	PSF	REF SY42 CONNECTION
TC DL	PSF	DATE 1/1/09
BC DL	PSF	DRWG CNSY42PL0109
BC LL	PSF	
TOT. LD.	PSF	
DUR. FAC.	1.00	
SPACING		