CH# 2067

Columbia County Building Permit Application

For Office Use Only Application # 0707-12 Date Received 7/3/07 By GT Permit # 26052

Application Approved by - Zoning Official BLK Date 10.07.07 Plans Examiner OKYH Date 7-11-07

Flood Zone X Development Permit N/A Zoning A-3 Land Use Plan Map Category A-3

Comments Existing MH to be removed within 45 days of CO being issued

☑ NOC ☐ EH (need) ☐ Deed or PA ☑ Site Plan (need copy of license) ☐ State Road Info ☐ Parent Parcel # ☐ Development Permi

Name Authorized Person Signing Permit Phillip Hartley or Kyle Hartley Phone 352 332 2112 Fax 352 332 9312

Address 107 SW 140th ter. Suite 2 Newberry FL 32669

Owners Name René Morris Phone 386 497 4181

911 Address 491 SW Red Cedar Ct. Fort white, FL 32038

Contractors Name Phillip Hartley Phone 352 332 2112

Address 107 SW 140th ter. Suite 2 Newberry FL 32669

Fee Simple Owner Name & Address René Morris

Bonding Co. Name & Address N/A

Architect/Engineer Name & Address N/A

Mortgage Lenders Name & Address Wells Fargo Bank 2799 Wells Fargo Way Minneapolis Minn. 5546

Circle the correct power company - FL Power & Light - (Clay Elec.) - Suwannee Valley Elec. - Progressive Energ

Property ID Number R04070-004 35-65-16 Estimated Cost of Construction $172,143

Subdivision Name N/A Lot — Block — Unit — Phase —

Driving Directions From intersection of 27 and 18 in Fort white go East on 18 (1.4) miles, take a Right on Red Cedar Court, go down (0.3) property on (Right) last lot on right

Type of Construction WOOD FRAME SFR Number of Existing Dwellings on Property 1

Total Acreage ±5 Lot Size _____ Do you need a - Culvert Permit or Culvert Waiver or Have an Existing Driv

Actual Distance of Structure from Property Lines - Front 80' Side left 330' Side Right 142' Rear 194'

Total Building Height 20' Number of Stories 1 Heated Floor Area 1640 ft² TOTAL 2244 Roof Pitch 7/12

Application is hereby made to obtain a permit to do work and installations as indicated. I certify that no work or installation has commenced prior to the issuance of a permit and that all work be performed to meet the standards of all laws regulating construction in this jurisdiction.

OWNERS AFFIDAVIT: I hereby certify that all the foregoing information is accurate and all work will be done in compliance with all applicable laws and regulating construction and zoning.

WARNING TO OWNER: YOUR FAILURE TO RECORD A NOTICE OF COMMENCMENT MAY RESULT IN YOU PAYING TWICE FOR IMPROVEMENTS TO YOUR PROPERTY. IF YOU INTEND TO OBTAIN FINANCING, CONSULT WITH YOUR LENDER OR ATTORNEY BEFORE RECORDING YOUR NOTICE OF COMMENCEMENT.

Owner Builder or Authorized Person by Notarized Letter

DEBORAH J. HORLER
Notary Public - State of Florida
My Commission Expires Nov 5, 2008
Commission # DD335422
Bonded By National Notary Assn.

Contractor Signature

Contractors License Number CBC019922

Competency Card Number

NOTARY STAMP/SEAL

STATE OF FLORIDA
COUNTY OF COLUMBIA

Sworn to (or affirmed) and subscribed before me

this 5th day of July 2007.

Personally known ____ or Produced Identification ____

Notary Signature

(Revised Sept. 2006)

0707-12

Prepared by
Elaine R. Davis, an employee of
Associated Land Title Group, Inc.,
300 North Marion Street
Lake City, Florida 32055
904-752-3561

File Number 0238554

Warranty Deed

Made this March 29, 2002 A.D. By **Carol Lee Larsen Flemming f/k/a Carol Lee Larsen** and Dan Flemming, Husband and wife, whose address is: Route 3, Box 1123, Ft. White, Florida 32038, hereinafter called the grantor, to **Rene G. Morris and Charlotte M. Gaston**, as Joint Tenants With Right of Survivorship, whose post office address is: Route 3, Box 1123, Ft. White, Florida 32038, hereinafter called the grantee:

(Whenever used herein the term "grantor" and "grantee" include all the parties to this instrument and the heirs, legal representatives and assigns of individuals, and the successors and assigns of corporations)

Witnesseth, that the grantor, for and in consideration of the sum of Ten Dollars, ($10.00) and other valuable considerations, receipt whereof is hereby acknowledged, hereby grants, bargains, sells, aliens, remises, releases, conveys and confirms unto the grantee, all that certain land situate in Columbia County, Florida, viz:

The East 1/2 of the Southwest 1/4 of the Southeast 1/4 of the Southwest 1/4 of Section 35, Township 6 South, Range 16 East, Columbia County, Florida.

Together With Easement for Ingress and egress over and across the following:

West 60 feet of the E 1/2 of the NE 1/4 of the SW 1/4 and the West 60.00 feet of the NE l/4 of the SE l/4 of the SW l/4 and the North 60.00 feet of the West 60.00 feet of the SE l/4 of the SE l/4 of SW l/4 of Section 35, Township 6 South, Range 16 East, Columbia County, Florida.

Parcel ID Number: R04070-004

Together with all the tenements, hereditaments and appurtenances thereto belonging or in anywise appertaining.

To Have and to Hold, the same in fee simple forever.

And the grantor hereby covenants with said grantee that the grantor is lawfully seized of said land in fee simple; that the grantor has good right and lawful authority to sell and convey said land; that the grantor hereby fully warrants the title to said land and will defend the same against the lawful claims of all persons whomsoever; and that said land is free of all encumbrances except taxes accruing subsequent to December 31, 2001

In Witness Whereof, the said grantor has signed and sealed these presents the day and year first above written.

Signed and Sealed in Our Presence:

Witness Signature

Witness Print Name: MILLARD GILLEN

Witness Signature

Witness Print Name: ELAINE R. DAVIS

Carol Lee Larsen Flemming

Dan Flemming

Inst:200200[illegible] Date:04.02.2002 Time:14:40:3[illegible]
Doc Stamp-Deed : 532.00
ZMK ...D.C.Gewitt Lesen,Columbia County B:949 P:2[illegible]

State of Florida

County of Columbia

SWORN TO, SUBSCRIBED AND ACKNOWLEDGED before me this March 29, 2002, by **Carol Lee Larsen Flemming and Dan Flemming** who is/are personally known to me or has/have produced a valid driver's license as identification

Notary Public

My Commission Expires:

ELAINE R. DAVIS
My Comm Exp. 10/14/03
No. CC 879615
Personally Known Other ID

Acreage in Columbia County
In Section 35 Township 6 South
Range 16 East

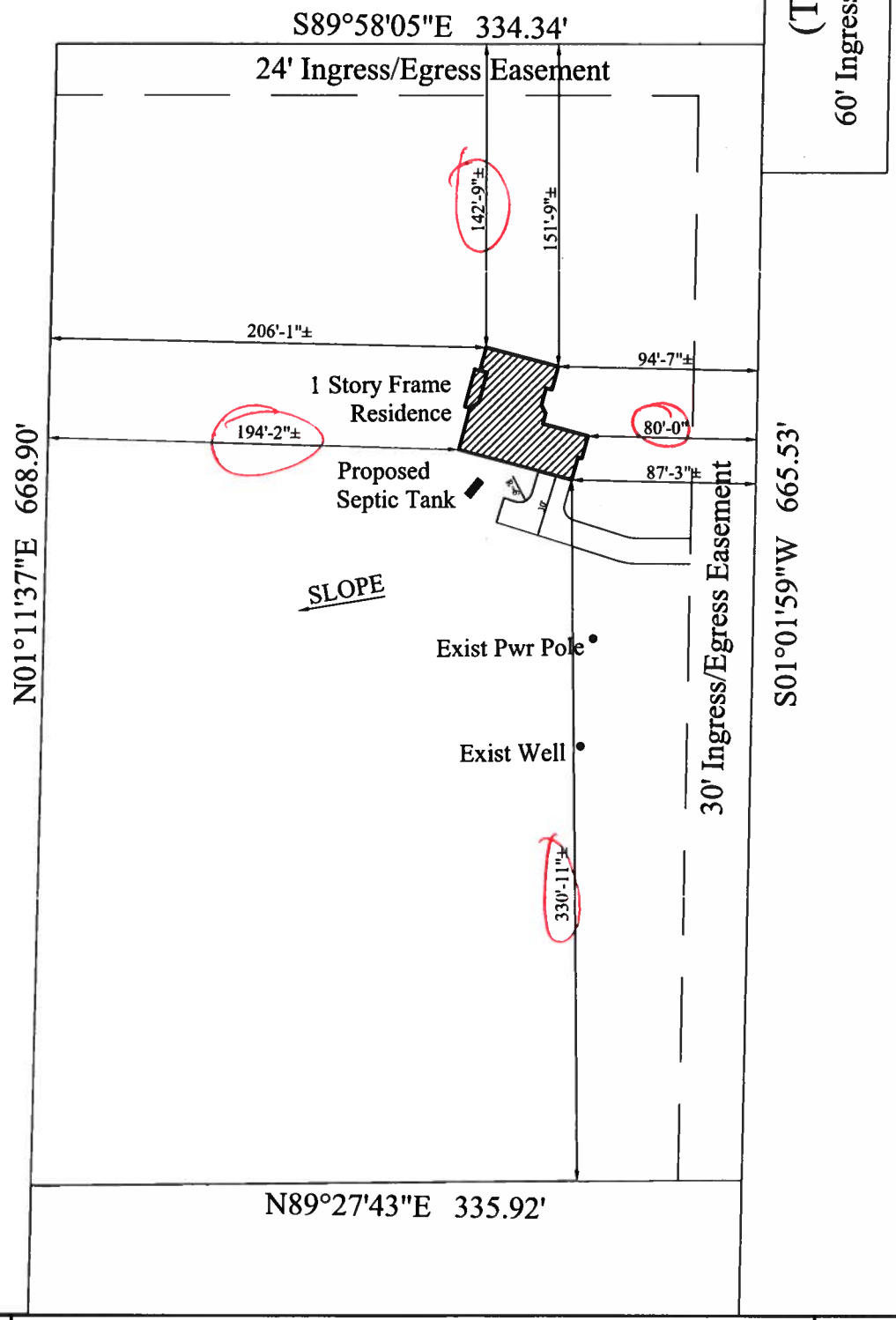

Hartley Brothers Construction, Inc.

Site Plan - The Remmington (LH)
For: Renee Morris
Columbia County, Florida

N

1"=80'

Acreage in Columbia County
In Section 35 Township 6 South
Range 16 East

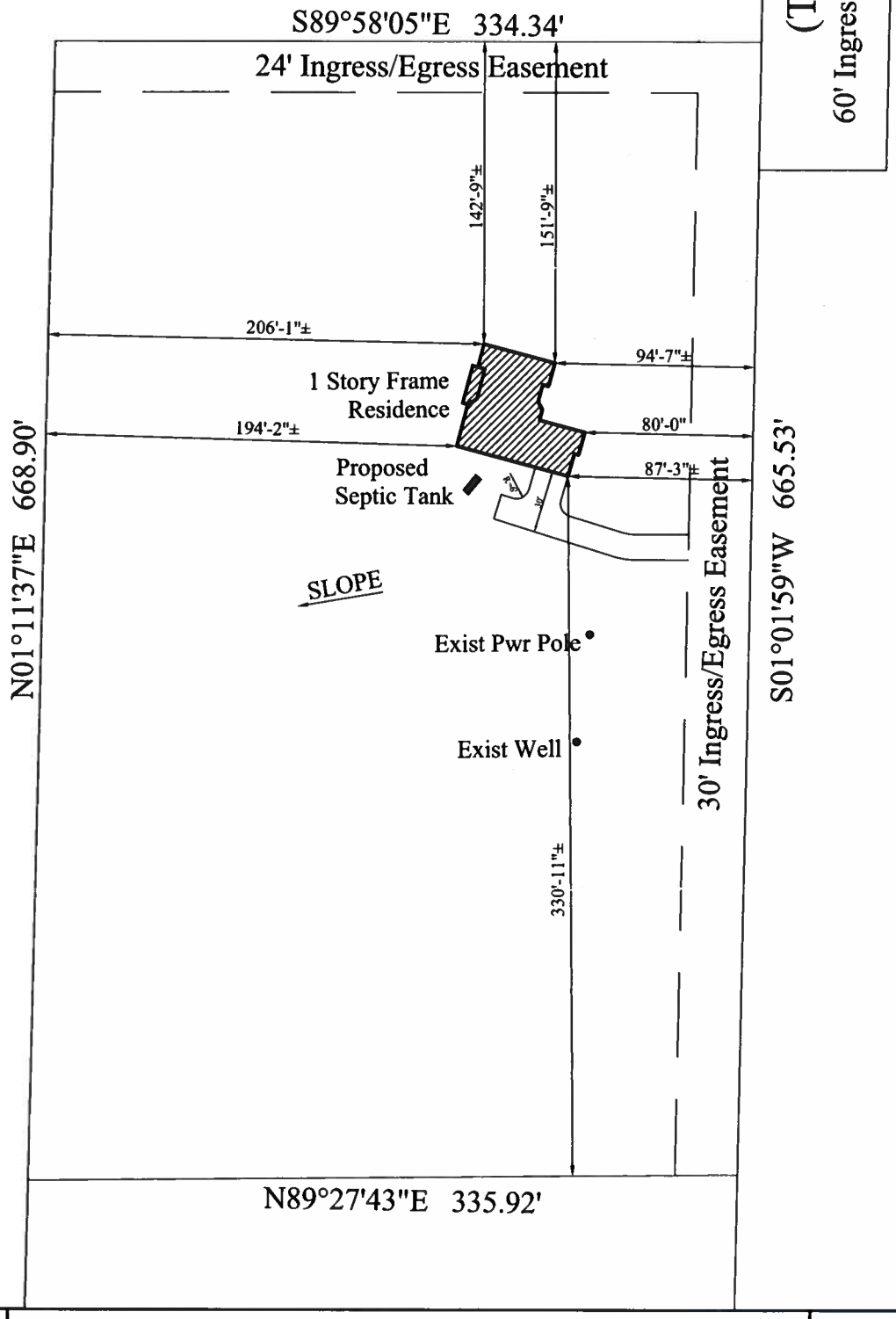

Hartley Brothers Construction, Inc.

Site Plan - The Remmington (LH)
For: Renee Morris
Columbia County, Florida

N

1"=80'

1.50

Return to:
Carpenter & Roscow, P.A.
5608 NW 43rd Street
Gainesville, FL 32653

This instrument prepared by and
After recordation should be returned to:

Wells Fargo Bank, N.A.-Construction Lending
2701 Wells Fargo Way, MAC# X9999-01M
Minneapolis, Minnesota 55467

Inst:200712012358 Date:6/5/2007 Time:3:27 PM
_____DC,P.DeWitt Cason ,Columbia County Page 1 of 3

0076210434

Permit No. _____ Tax Folio No. R04070-004

NOTICE OF COMMENCEMENT

STATE OF FLORIDA

COUNTY OF ALACHUA

THE UNDERSIGNED hereby gives notice that improvement will be made to certain real property, and in accordance with Chapter 713, Florida Statutes, the following information is provided in this Notice of Commencement:

1. Description of Property (legal description of the property and street address if available):
SEE EXHIBIT "A" ATTACHED HERETO AND MADE A PART HEREOF FOR ALL PURPOSES

491 SW RED CEDAR COURT, FORT WHITE, FLORIDA 32038

2. General description of improvement: single family residence
3. Owner Information:
   (a) Name and address: **RENE G. MORRIS**

   491 SW RED CEDAR COURT, FORT WHITE, FLORIDA 32038
   (b) Interest in property: fee simple
   (c) Name and address of fee simple titleholder (if other than borrower):
   _____
4. Contractor(Name and address): **HARTLEY BROTHERS CONST. CO.**
   107 S.W. 140th Terrace, Suite B
   Newberry, FL 32669
5. Surety (if applicable):
   (a) Name and address: _____
   (b) Amount of Bond: $ _____
6. Lender (Name and address): **WELLS FARGO BANK, N.A.**
   2799 WELLS FARGO WAY, MAC# X9901-08T
   MINNEAPOLIS, MINNESOTA 55467
7. Persons within the State of Florida designated by Owner upon whom notices or other documents may be served as provided by Section 713.13 (1) (a)7, Florida Statutes
   Name and address: _____
   _____

8. In addition to himself, Owner designates WELLS FARGO BANK, N.A.
2799 WELLS FARGO WAY, MAC# X9901-08T, MINNEAPOLIS, MINNESOTA 55467
to receive a copy of the Lienor's Notice as provided in Section 713.13 (1) (b), Florida Statutes.

9. Expiration date of notice of commencement (the expiration date is 1 year from the date of recording unless a different date is specified): MAY 31, 2009

RENE G. MORRIS

Sworn to and subscribed before me this 31st day of May, 2007.
He/She is personally known to me or produced drivers license as identification.

My Commission expires: _____

Notary Public

John F. Roscow, IV
MY COMMISSION # DD203963
June 3, 2007
BONDED THRU TROY FAIN INSURANCE, INC.

EXHIBIT "A"

The East 1/2 of the Southwest 1/4 of the Southeast 1/4 of the Southwest 1/4 of Section 35, Township 6 South, Range 16 East, Columbia County, Florida, Less and Except the South 130 Feet thereof.

Subject to an Easement for ingress and egress over and across the East 30 Feet of the above described property.

Together with Easement for ingress and egress over and across the following:

The West 60 feet of the East 1/2 of the Northeast 1/4 of the Southwest 1/4 and the West 60 feet of the Northeast 1/4 of the Southeast 1/4 of the Southwest 1/4 and the North 60 feet of the West 60 feet of the SE 1/4 of the SE 1/4 of the SW 1/4 of Section 35, Township 6 South, Range 16 East, Columbia County, Florida.

To Whom It May Concern,

Within 30 days of Certificate of Occupancy on my new home I will have my mobile home removed from my property.

Sincerely,

Rene' Morris

4/27/07

STATE OF FLORIDA
COUNTY OF Okeechobee
The foregoing instrument was acknowledged before me
this 27th day of April, 2007
by Rene' Morris
Personally Known _____ or produced
Identification type FL DL M650-757-65-572-0

Signature of Notary Seal

DEBORAH J. HORLER
Notary Public - State of Florida
My Commission Expires Nov 5, 2008
Commission # DD335422
Bonded By National Notary Assn.

HARTLEY BROTHERS CONSTRUCTION, INC.
107 SW 140TH TERRACE, SUITE 2
NEWBERRY, FLORIDA 32669
352-332-2112

July 2, 2007

Columbia County Building Department
Lake City, Florida

To Whom It May Concern:

I, Phillip Hartley of Hartley Brothers Construction, Inc. do hereby give my permission for Kyle Hartley to sign for permitting purposes for me.

Phillip Hartley
Hartley Brothers Construction, Inc.

STATE OF FLORIDA
COUNTY OF ALACHUA

THE FOREGOING INSTRUMENT WAS ACKNOWLEDGED BEFORE ME THIS 2nd Day of July, 2007, BY PHILLIP HARTLEY, OF HARTLEY BROTHERS CONSTRUCTION, INC., WHO IS PERSONALLY KNOWN TO ME.

DEBORAH J. HORLER
NOTARY PUBLIC

DEBORAH J. HORLER
Notary Public - State of Florida
My Commission Expires Nov 5, 2008
Commission # DD335422
Bonded By National Notary Assn.

FORM 600A-2004R

EnergyGauge® 0.

FLORIDA ENERGY EFFICIENCY CODE FOR BUILDING CONSTRUCTION

Florida Department of Community Affairs

Residential Whole Building Performance Method A

Project Name:	HARTLEY - RENEE MORRIS RESIDENCE	Builder:	HARTLEY BROTHERS CONS
Address:		Permitting Office:	Columbia
City, State:	,	Permit Number:	26052
Owner:		Jurisdiction Number:	221000
Climate Zone:	North		

1. New construction or existing	New	
2. Single family or multi-family	Single family	
3. Number of units, if multi-family	1	
4. Number of Bedrooms	3	
5. Is this a worst case?	Yes	
6. Conditioned floor area (ft²)	1640 ft²	
7. Glass type[1] and area: (Label reqd. by 13-104.4.5 if not default)		
a. U-factor: (or Single or Double DEFAULT)	Description Area 7a. (Dble, U=0.4) 110.0 ft²	
b. SHGC: (or Clear or Tint DEFAULT)	7b. (SHGC=0.36) 181.0 ft²	
8. Floor types		
a. Slab-On-Grade Edge Insulation	R=0.0, 180.0(p) ft	
b. N/A		
c. N/A		
9. Wall types		
a. Frame, Wood, Exterior	R=13.0, 1224.0 ft²	
b. Frame, Wood, Adjacent	R=13.0, 216.0 ft²	
c. N/A		
d. N/A		
e. N/A		
10. Ceiling types		
a. Under Attic	R=30.0, 2195.0 ft²	
b. Under Attic	R=19.0, 132.0 ft²	
c. N/A		
11. Ducts		
a. Sup: Unc. Ret: Unc. AH: Garage	Sup. R=6.0, 186.0 ft	
b. N/A		

12. Cooling systems		
a. Central Unit	Cap: 36.0 kBtu/hr SEER: 14.00	
b. N/A		
c. N/A		
13. Heating systems		
a. Electric Heat Pump	Cap: 36.0 kBtu/hr HSPF: 8.10	
b. N/A		
c. N/A		
14. Hot water systems		
a. Electric Resistance	Cap: 50.0 gallons EF: 0.90	
b. N/A		
c. Conservation credits (HR-Heat recovery, Solar DHP-Dedicated heat pump)		
15. HVAC credits (CF-Ceiling fan, CV-Cross ventilation, HF-Whole house fan, PT-Programmable Thermostat, MZ-C-Multizone cooling, MZ-H-Multizone heating)		

Glass/Floor Area: 0.11

Total as-built points: 21485
Total base points: 23464

PASS

I hereby certify that the plans and specifications covered by this calculation are in compliance with the Florida Energy Code.

PREPARED BY: Gale Insulation

DATE: 6-21-07

I hereby certify that this building, as designed, is in compliance with the Florida Energy Code.

OWNER/AGENT: _____

DATE: _____

Review of the plans and specifications covered by this calculation indicates compliance with the Florida Energy Code. Before construction is completed this building will be inspected for compliance with Section 553.908 Florida Statutes.

GREAT SEAL OF THE STATE OF FLORIDA
IN GOD WE TRUST

BUILDING OFFICIAL: _____

DATE: _____

1 Predominant glass type. For actual glass type and areas, see Summer & Winter Glass output on pages 2&4.

SUMMER CALCULATIONS

Residential Whole Building Performance Method A - Details

ADDRESS: , , , PERMIT #:

BASE				AS-BUILT							
GLASS TYPES .18 X Conditioned Floor Area	X BSPM	= Points		Type/SC	Overhang Ornt	Len	Hgt	Area X	SPM X	SOF	= Points
.18	1640.0	18.59	5488.0	1.Double,U=0.39,SHGC=0.	W	0.0	0.0	35.0	20.65	1.00	722.0
				2.Double,U=0.39,SHGC=0.	N	0.0	0.0	12.0	10.21	1.00	122.0
				3.Double,U=0.39,SHGC=0.	E	0.0	0.0	110.0	22.56	1.00	2481.0
				4.Double,U=0.39,SHGC=0.	S	0.0	0.0	9.0	19.20	1.00	172.0
				5.Double,U=0.39,SHGC=0.	SW	0.0	0.0	15.0	21.53	1.00	322.0
				As-Built Total:				**181.0**			**3819.0**

WALL TYPES	Area X	BSPM =	Points	Type	R-Value	Area X	SPM =	Points
Adjacent	216.0	0.70	151.2	1. Frame, Wood, Exterior	13.0	1224.0	1.50	1836.0
Exterior	1224.0	1.70	2080.8	2. Frame, Wood, Adjacent	13.0	216.0	0.60	129.6
Base Total:	**1440.0**		**2232.0**	**As-Built Total:**		**1440.0**		**1965.6**

DOOR TYPES	Area X	BSPM =	Points	Type	Area X	SPM =	Points
Adjacent	20.0	2.40	48.0	1.Exterior Insulated	29.0	4.10	118.9
Exterior	29.0	6.10	176.9	2.Adjacent Insulated	20.0	1.60	32.0
Base Total:	**49.0**		**224.9**	**As-Built Total:**	**49.0**		**150.9**

CEILING TYPES	Area X	BSPM =	Points	Type	R-Value	Area X	SPM X SCM =	Points
Under Attic	1640.0	1.73	2837.2	1. Under Attic	30.0	2195.0	1.73 X 1.00	3797.4
				2. Under Attic	19.0	132.0	2.34 X 1.00	308.9
Base Total:	**1640.0**		**2837.2**	**As-Built Total:**		**2327.0**		**4106.2**

FLOOR TYPES	Area X	BSPM =	Points	Type	R-Value	Area X	SPM =	Points
Slab	180.0(p)	-37.0	-6660.0	1. Slab-On-Grade Edge Insulation	0.0	180.0(p	-41.20	-7416.0
Raised	0.0	0.00	0.0					
Base Total:			**-6660.0**	**As-Built Total:**		**180.0**		**-7416.0**

INFILTRATION	Area X	BSPM =	Points	Area X	SPM =	Points
	1640.0	10.21	16744.4	1640.0	10.21	16744.4

SUMMER CALCULATIONS

Residential Whole Building Performance Method A - Details

ADDRESS: , , , PERMIT #:

BASE				AS-BUILT							
Summer Base Points: 20866.5				**Summer As-Built Points:**							**19370.1**
Total Summer Points	X System Multiplier	= Cooling Points		Total Component (System - Points)	X Cap Ratio	X Duct Multiplier (DM x DSM x AHU)	X System Multiplier	X Credit Multiplier	= Cooling Points		
				(sys 1: Central Unit 36000btuh ,SEER/EFF(14.0) Ducts:Unc(S),Unc(R),Gar(AH),R6.0(INS)							
				19370	1.00	(1.09 x 1.147 x 1.00)	0.244	1.000	5903.8		
20866.5	**0.3250**	**6781.6**		**19370.1**	**1.00**	**1.250**	**0.244**	**1.000**	**5903.8**		

WINTER CALCULATIONS

Residential Whole Building Performance Method A - Details

ADDRESS: , , , PERMIT #:

BASE				AS-BUILT							
GLASS TYPES .18 X Conditioned Floor Area		X BWPM	= Points	Type/SC	Overhang Ornt	Len	Hgt	Area X	WPM X	WOF	= Points
.18	1640.0	20.17	5954.0	1.Double,U=0.39,SHGC=0.	W	0.0	0.0	35.0	10.28	1.00	359.0
				2.Double,U=0.39,SHGC=0.	N	0.0	0.0	12.0	12.38	1.00	148.0
				3.Double,U=0.39,SHGC=0.	E	0.0	0.0	110.0	9.29	1.00	1021.0
				4.Double,U=0.39,SHGC=0.	S	0.0	0.0	9.0	6.23	1.00	56.0
				5.Double,U=0.39,SHGC=0.	SW	0.0	0.0	15.0	8.14	1.00	122.0
				As-Built Total:				**181.0**			**1706.0**

WALL TYPES	Area X	BWPM	= Points	Type	R-Value	Area X	WPM	= Points
Adjacent	216.0	3.60	777.6	1. Frame, Wood, Exterior	13.0	1224.0	3.40	4161.6
Exterior	1224.0	3.70	4528.8	2. Frame, Wood, Adjacent	13.0	216.0	3.30	712.8
Base Total:	**1440.0**		**5306.4**	**As-Built Total:**		**1440.0**		**4874.4**

DOOR TYPES	Area X	BWPM	= Points	Type	Area X	WPM	= Points
Adjacent	20.0	11.50	230.0	1.Exterior Insulated	29.0	8.40	243.6
Exterior	29.0	12.30	356.7	2.Adjacent Insulated	20.0	8.00	160.0
Base Total:	**49.0**		**586.7**	**As-Built Total:**	**49.0**		**403.6**

CEILING TYPES	Area X	BWPM	= Points	Type	R-Value	Area X	WPM X WCM	= Points
Under Attic	1640.0	2.05	3362.0	1. Under Attic	30.0	2195.0	2.05 X 1.00	4499.8
				2. Under Attic	19.0	132.0	2.70 X 1.00	356.4
Base Total:	**1640.0**		**3362.0**	**As-Built Total:**		**2327.0**		**4856.1**

FLOOR TYPES	Area X	BWPM	= Points	Type	R-Value	Area X	WPM	= Points
Slab	180.0(p)	8.9	1602.0	1. Slab-On-Grade Edge Insulation	0.0	180.0(p	18.80	3384.0
Raised	0.0	0.00	0.0					
Base Total:			**1602.0**	**As-Built Total:**		**180.0**		**3384.0**

INFILTRATION	Area X	BWPM	= Points		Area X	WPM	= Points
	1640.0	-0.59	-967.6		1640.0	-0.59	-967.6

WINTER CALCULATIONS

Residential Whole Building Performance Method A - Details

ADDRESS: , , , PERMIT #:

BASE				AS-BUILT							
Winter Base Points:			**15843.5**	**Winter As-Built Points:**							**14256.5**
Total Winter Points	X	System Multiplier	= Heating Points	Total Component (System - Points)	X	Cap Ratio	X Duct Multiplier (DM x DSM x AHU)	X System Multiplier	X Credit Multiplier	=	Heating Points
				(sys 1: Electric Heat Pump 36000 btuh ,EFF(8.1) Ducts:Unc(S),Unc(R),Gar(AH),R6.0							
				14256.5		1.000	(1.069 x 1.169 x 1.00)	0.421	1.000		7500.3
15843.5		**0.5540**	**8777.3**	**14256.5**		**1.00**	**1.250**	**0.421**	**1.000**		**7500.3**

WATER HEATING & CODE COMPLIANCE STATUS

Residential Whole Building Performance Method A - Details

ADDRESS: , , , PERMIT #:

BASE				AS-BUILT							
WATER HEATING											
Number of Bedrooms	X	Multiplier	= Total	Tank Volume	EF	Number of Bedrooms	X	Tank Ratio	X Multiplier	X Credit Multiplier	= Total
3		2635.00	7905.0	50.0	0.90	3		1.00	2693.56	1.00	8080.7
				As-Built Total:							**8080.7**

CODE COMPLIANCE STATUS

BASE				AS-BUILT			
Cooling Points +	Heating Points +	Hot Water Points =	Total Points	Cooling Points +	Heating Points +	Hot Water Points =	Total Points
6782	**8777**	**7905**	**23464**	**5904**	**7500**	**8081**	**21485**

PASS

Code Compliance Checklist

Residential Whole Building Performance Method A - Details

ADDRESS: , , , PERMIT #:

6A-21 INFILTRATION REDUCTION COMPLIANCE CHECKLIST

COMPONENTS	SECTION	REQUIREMENTS FOR EACH PRACTICE	CHECK
Exterior Windows & Doors	606.1.ABC.1.1	Maximum:.3 cfm/sq.ft. window area; .5 cfm/sq.ft. door area.	
Exterior & Adjacent Walls	606.1.ABC.1.2.1	Caulk, gasket, weatherstrip or seal between: windows/doors & frames, surrounding wall; foundation & wall sole or sill plate; joints between exterior wall panels at corners; utility penetrations; between wall panels & top/bottom plates; between walls and floor. EXCEPTION: Frame walls where a continuous infiltration barrier is installed that extends from, and is sealed to, the foundation to the top plate.	
Floors	606.1.ABC.1.2.2	Penetrations/openings >1/8" sealed unless backed by truss or joint members. EXCEPTION: Frame floors where a continuous infiltration barrier is installed that is sealed to the perimeter, penetrations and seams.	
Ceilings	606.1.ABC.1.2.3	Between walls & ceilings; penetrations of ceiling plane of top floor; around shafts, chases, soffits, chimneys, cabinets sealed to continuous air barrier; gaps in gyp board & top plate; attic access. EXCEPTION: Frame ceilings where a continuous infiltration barrier is installed that is sealed at the perimeter, at penetrations and seams.	
Recessed Lighting Fixtures	606.1.ABC.1.2.4	Type IC rated with no penetrations, sealed; or Type IC or non-IC rated, installed inside a sealed box with 1/2" clearance & 3" from insulation; or Type IC rated with < 2.0 cfm from conditioned space, tested.	
Multi-story Houses	606.1.ABC.1.2.5	Air barrier on perimeter of floor cavity between floors.	
Additional Infiltration reqts	606.1.ABC.1.3	Exhaust fans vented to outdoors, dampers; combustion space heaters comply with NFPA, have combustion air.	

6A-22 OTHER PRESCRIPTIVE MEASURES (must be met or exceeded by all residences.)

COMPONENTS	SECTION	REQUIREMENTS	CHECK
Water Heaters	612.1	Comply with efficiency requirements in Table 612.1.ABC.3.2. Switch or clearly marked cir breaker (electric) or cutoff (gas) must be provided. External or built-in heat trap required.	
Swimming Pools & Spas	612.1	Spas & heated pools must have covers (except solar heated). Non-commercial pools must have a pump timer. Gas spa & pool heaters must have a minimum thermal efficiency of 78%.	
Shower heads	612.1	Water flow must be restricted to no more than 2.5 gallons per minute at 80 PSIG.	
Air Distribution Systems	610.1	All ducts, fittings, mechanical equipment and plenum chambers shall be mechanically attached, sealed, insulated, and installed in accordance with the criteria of Section 610. Ducts in unconditioned attics: R-6 min. insulation.	
HVAC Controls	607.1	Separate readily accessible manual or automatic thermostat for each system.	
Insulation	604.1, 602.1	Ceilings-Min. R-19. Common walls-Frame R-11 or CBS R-3 both sides. Common ceiling & floors R-11.	

ENERGY PERFORMANCE LEVEL (EPL) DISPLAY CARD

ESTIMATED ENERGY PERFORMANCE SCORE* = 86.2

The higher the score, the more efficient the home.

1. New construction or existing	New	
2. Single family or multi-family	Single family	
3. Number of units, if multi-family	1	
4. Number of Bedrooms	3	
5. Is this a worst case?	Yes	
6. Conditioned floor area (ft²)	1640 ft²	
7. Glass type[1] and area: (Label reqd. by 13-104.4.5 if not default)		
a. U-factor: (or Single or Double DEFAULT)	7a. (Dble, U=0.4) 110.0 ft²	
b. SHGC: (or Clear or Tint DEFAULT)	7b. (SHGC=0.36) 181.0 ft²	
8. Floor types		
a. Slab-On-Grade Edge Insulation	R=0.0, 180.0(p) ft	
b. N/A		
c. N/A		
9. Wall types		
a. Frame, Wood, Exterior	R=13.0, 1224.0 ft²	
b. Frame, Wood, Adjacent	R=13.0, 216.0 ft²	
c. N/A		
d. N/A		
e. N/A		
10. Ceiling types		
a. Under Attic	R=30.0, 2195.0 ft²	
b. Under Attic	R=19.0, 132.0 ft²	
c. N/A		
11. Ducts		
a. Sup: Unc. Ret: Unc. AH: Garage	Sup. R=6.0, 186.0 ft	
b. N/A		
12. Cooling systems		
a. Central Unit	Cap: 36.0 kBtu/hr	
	SEER: 14.00	
b. N/A		
c. N/A		
13. Heating systems		
a. Electric Heat Pump	Cap: 36.0 kBtu/hr	
	HSPF: 8.10	
b. N/A		
c. N/A		
14. Hot water systems		
a. Electric Resistance	Cap: 50.0 gallons	
	EF: 0.90	
b. N/A		
c. Conservation credits (HR-Heat recovery, Solar DHP-Dedicated heat pump)		
15. HVAC credits (CF-Ceiling fan, CV-Cross ventilation, HF-Whole house fan, PT-Programmable Thermostat, MZ-C-Multizone cooling, MZ-H-Multizone heating)		

I certify that this home has complied with the Florida Energy Efficiency Code For Building Construction through the above energy saving features which will be installed (or exceeded) in this home before final inspection. Otherwise, a new EPL Display Card will be completed based on installed Code compliant features.

Builder Signature: _____ Date: _____

Address of New Home: _____ City/FL Zip: _____

**NOTE: The home's estimated energy performance score is only available through the FLA/RES computer program. This is not a Building Energy Rating. If your score is 80 or greater (or 86 for a US EPA/DOE EnergyStar™ designation), your home may qualify for energy efficiency mortgage (EEM) incentives if you obtain a Florida Energy Gauge Rating. Contact the Energy Gauge Hotline at 321/638-1492 or see the Energy Gauge web site at www.fsec.ucf.edu for information and a list of certified Raters. For information about Florida's Energy Efficiency Code For Building Construction, contact the Department of Community Affairs at 850/487-1824.*

1 Predominant glass type. For actual glass type and areas, see Summer & Winter Glass output on pages 2&4.

AC# 2734018

STATE OF FLORIDA

DEPARTMENT OF BUSINESS AND PROFESSIONAL REGULATION

CBC019922 08/19/06 060103155

CERTIFIED BUILDING CONTRACTOR
HARTLEY, PHILLIP WAYNE
HARTLEY BROS CONSTRUCTION INC

IS CERTIFIED under the provisions of Ch.489 FS.

Expiration date: AUG 31, 2008 L06081901107

STATE OF FLORIDA
DEPARTMENT OF HEALTH

APPLICATION FOR ONSITE SEWAGE DISPOSAL SYSTEM CONSTRUCTION PERMIT

Permit Application Number 07-0536

PART II - SITE PLAN

Scale: Each block represents 5 feet and 1 inch = 50 feet.

See Attached

Notes: REVISED 7/24/7

x

Site Plan submitted by: Signature Title

Plan Approved X APPROVED Not Approved Columbia CHD Date 7/24/7

By County Health Department

ALL CHANGES MUST BE APPROVED BY THE COUNTY HEALTH DEPARTMENT

DH 4015, 10/96 (Replaces HRS-H Form 4015 which may be used)
(Stock Number: 5744-002-4015-6)

Acreage in Columbia County
In Section 35 Township 6 South
Range 16 East

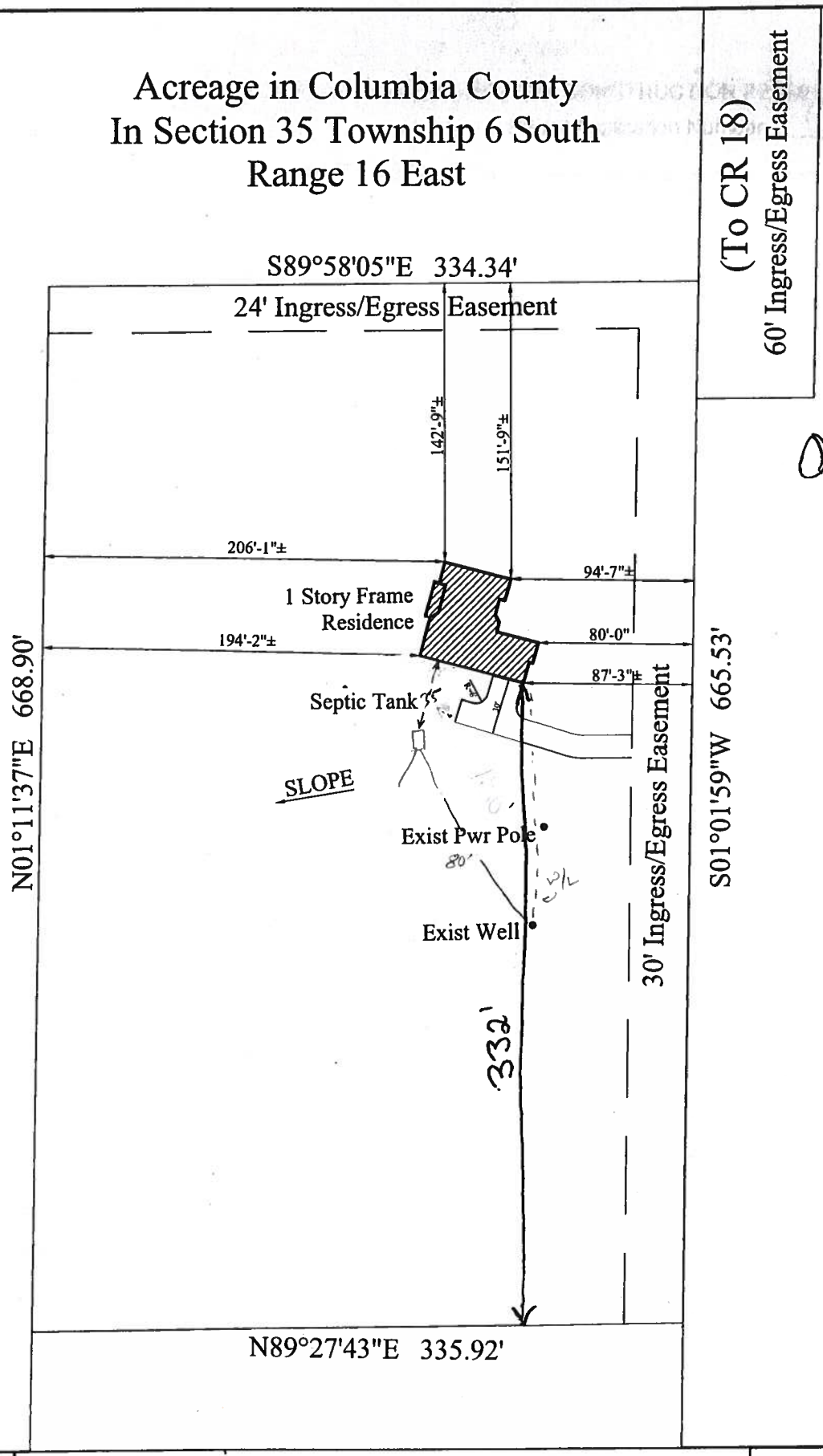

07-0536

Plan

Hartley Brothers Construction, Inc.

Site Plan - The Remmington (LH)
For: Renee Morris
Columbia County, Florida

N

1"=80'

Geoengineering & Testing, Inc. #26052

Geotechnical • Environmental • Construction Materials Testing

IN-PLACE DENSITY TEST RESULTS

CLIENT: Hartley Brothers

PROJECT: 491 Red Cedar Court
Ft. White Fl

AREA TESTED: Fill Below Foundation

COURSE: Final Lifts Below Foundation DEPTH OF TEST: 0-12"

TYPE OF TEST: ASTM ~~#DATE~~ 26052 TESTED: 7-26-7

NOTE: The below tests DO/DO NOT meet the minimum 95 % compaction requirements of maximum density.

REMARKS:

SOIL DESCRIPTION: Archer Gold Sand

LOCATION OF TESTS	DRY DEN.	MAX. DEN.	% MAX. DEN.	% MOIST.	OPT. MOIST.
SE corner Below Slab	110.3	106.2	103.9	7.5	10.8
SW "	107.4		101.2	8.3	
NW "	109.1		102.7	7.7	
Center of Garage	108.6		102.2	5.3	
West Footing	102.5		96.5	14.6	
East Footing	103.0		96.9	16.2	

4404

TECH. Mike Maurer

M. Fred Rwebyogo, PE
Florida Registration No. 46694

3402 NE 2nd Street, Suite A
Gainesville, Florida 32609

Phone (352) 375-7108
FAX (352) 336-7630

NOTICE OF TREATMENT

#26052

Applicator Name McCall Service

Address 415 NW 250 St Suite 1

City Newberry

Time 12:12 Date 7-26-07

SITE LOCATION

Lot # _____ Block # _____ Permit # 00002605 2

Subdivision _____

Address 491 SW Red Cedar Ct

Name of Chemical Applied Bifenthrin Used .06 %

Area Treated 2244 sq ft

Gallons Used 225

Remarks Monolithic Slab

Applicator - White Permit File - Canary Permit Holder - Pink

M 1043

PRODUCT APPROVAL SPECIFICATION SHEET

As required by Florida Statute 553.842 and Florida Administrative Code 9B-72, please provide the information and approval numbers on the building components listed below if they will be utilized on the construction project for which you are applying for a building permit. We recommend you contact your local product supplier should you not know the product approval number for any of the applicable listed products. You shall also provide manufacturer's installation requirements.

Category/Subcategory	Manufacturer	Product Description	Approval Number(s)
1. EXTERIOR DOORS			
A. SWINGING	Masonite	6'8" opaque IS/OS Single door	4904.1
B. Swinging	Masonite	6'8" glazed IS/OS Single door	4904.6
C. Swinging	Masonite	6'8" glazed IS/OS Doubledoor	5465.1
D. ROLL UP	—		
E. Sectional	Overhead Door	Sectional garage door 9-16'	FL4861
F. OTHER	—		
2. WINDOWS			
A. SINGLE HUNG	MI	Double pane, insulated	5438.21
B. HORIZONTAL SLIDER	—		
C. CASEMENT	—		
D. DOUBLE HUNG	—		
E. FIXED	MI	Double pane, insulated	5418.10
F. AWNING	—		
G. PASS THROUGH	—		
H. PROJECTED	—		
I. MULLION	MI		FL5513
J. WIND BREAKER	—		
K. DUAL ACTION	—		
L. OTHER	—		
3. PANEL WALL			
A. SIDING	James Hardi	Hardiplank Lap Siding	889.5
B. SOFFITS	Ashley	Aluminum Soffit	FL406
C. EIFS			
D. STOREFRONTS	—		
E. CURTAIN WALLS	—		
F. WALL LOUVER	—		
G. GLASS BLOCK	Hylite		2025
H. MEMBRANE	—		
I. GREENHOUSE	—		
J. OTHER	—		
4. ROOFING PRODUCTS			
A. ASPHALT SHINGLES	Tamko	Heritage 30 AR	1956.3
B. UNDERLAYMENTS	Warrior Roofing	Roofing felt 15#	2346.1
C. ROOFING FASTENERS	Senco	1¼" roofing nail	6011.2
D underlayment	Woodland Industries	roofing felt 30#	1814.3
E. WOOD SHINGLES AND SHAKES	—		
F. ROOFING TILES	—		
G. ROOFING INSULATION	—		
H. WATERPROOFING	—		
I. BUILT-UP ROOFING ROOF SYSTEMS	—		
J. MODIFIED BITUMEN	—		
~~K. SINGLE PLY ROOF~~ SYSTEMS	—		
L. ROOFING SLATE	—		

LAMINATED SHINGLES

15

YOUR OBJECTIVE:
To learn the correct procedure for installing laminated shingles.

LANDMARK™ SERIES, WOODSCAPE™ SERIES, LANDMARK™ 40 IR AND LANDMARK™ TL

These shingles are built on a fiber glass base to provide a Class A fire resistance rating. **Wind warranties are graduated** according to the product's warranty duration: A 30-year shingle provides a 70 mph wind warranty, a 40-year provides 80 mph, a 50-year provides 90 mph and a limited-lifetime duration is warranted up to 110 mph.
NOTE: The wind warranty increases when fastened with six nails in the common bond area instead of with four as follows (*See Figure 15-5*):

- 30-year increases to 80 MPH
- 40-year increases to 90 MPH
- 50-year increases to 110 MPH

(Roofing cement is not required, except on steep slopes.)

★ Woodscape and Landmark shingles have the installer-friendly **WideTrack QB™** feature, which provides 1½" wide nailing area and specially formulated Quadra-Bond laminating adhesive (*See Figure 15-3*).

★ **Landmark 40 IR** – the IR stands for impact resistant – is specially manufactured with a reinforced fiberglass scrim to meet UL 2218 Class 4 impact resistance rating and it is also algae resistant.
NOTE: Landmark 40 IR must be installed over a clean deck (no roof-overs) to obtain the UL2218 rating. It is strongly recommended that impact resistant cap shingles made from XT 30 IR shingles be installed on all hips and ridges. Some insurance carriers may not consider the roof system as compliant to UL 2218 Class 4 without impact resistant cap shingles.

Landmark TL is unique because its patented Tri-Laminate™ design combines three layers of material to provide a dramatically thick shingle with a wood shake style.

With the exception of Landmark TL, closed-cut valleys are preferred by CertainTeed when applying these shingles. **Open valleys are recommended when applying Landmark TL;** however closed-cut valleys are also acceptable. Woven valleys are not recommended for Landmark TL because the tri-laminated shingle can buckle and become damaged when shaped into the valley. Nails are **required** as fasteners for Landmark TL, staples are not allowed.

STANDARD OR STEEP SLOPE UNDERLAYMENT: Shingle underlayment* meeting ASTM D4869 Type I standards is suggested. CertainTeed's Roofers' Select™, ShingleFelt™, or RoofWrap™ is preferred.

LOW SLOPE UNDERLAYMENT: One layer of WinterGuard™ or its equivalent*, or two layers of 36" (915 mm) wide felt shingle underlayment lapped 19" (485 mm) must be applied over the entire roof.

IMPORTANT: When installing LandMark TL on low slopes, one layer of WinterGuard or an equivalent waterproofing shingle underlayment must be applied over the entire roof. **Applying two layers of felt shingle underlayment is not an acceptable alternative to WinterGuard.** One layer of shingle underlayment meeting ASTM D4869 applied over the required WinterGuard is also recommended.

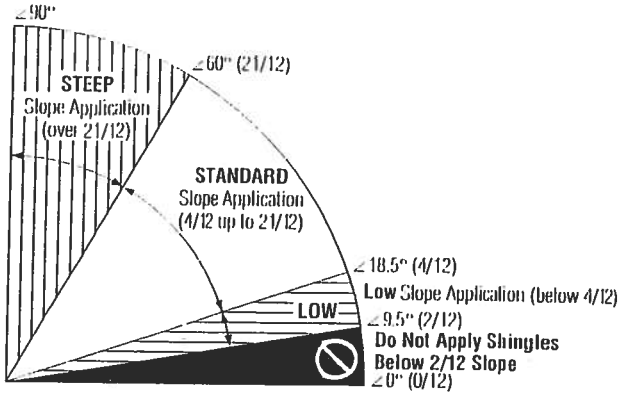

Figure 15-1: Slope definitions.

THE ROOF DECK* MUST BE AT LEAST: ⅜" (9.5 mm) thick plywood, **or** 7/16" (11 mm) thick non-veneer, **or** nominal 1" (25 mm) thick wood deck.

COLD WEATHER CLIMATES (ALL SLOPES): Applying WinterGuard or its equivalent* is strongly recommended wherever there is a possibility of ice build-up.

FLASHING: Corrosion-resistant flashing must be used to help prevent leaks where a roof meets a wall, another roof, a chimney or other objects that penetrate a roof.

SEALING: Shingle sealing may be delayed if shingles are applied in cool weather and may be further delayed by airborne dust accumulation. If any shingles have not sealed after a reasonable time period, hand sealing may be necessary.

CAUTION: To prevent cracking, shingles must be sufficiently warm to allow proper forming for hips, ridges and valleys.

WARRANTY: These shingles are warranted against manufacturing defects and covered by five years of SureStart protection, except LandMark TL which provides ten years of SureStart and includes coverage for tear-off and disposal costs. See the warranty itself for specific details and limitations.

*

For technical questions, information on acceptable alternative application methods and materials, or a copy of the product warranty, contact the sources listed below:		Warranty	Alternate Instructions	Technical Questions
Your supplier or roofing applicator		✓		
CertainTeed Home Institute	800-782-8777	✓	✓	
CertainTeed Fax-on-Demand	800-947-0057	✓	✓	
CertainTeed-RPG Technical Services	800-345-1145	✓	✓	✓

FASTENING

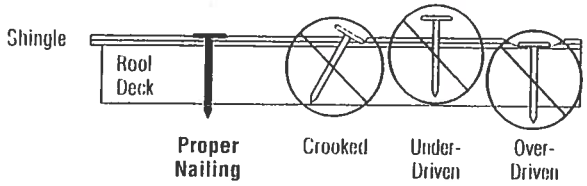

Figure 15-2: Proper and improper nailing.

IMPORTANT: For decks ¾" (19 mm) thick or thicker, nails must go at least ¾" (19 mm) into the deck. On thinner decks, nails must go at least ⅛" (3.2 mm) through the deck.

Nails must be 11- or 12-gauge roofing nails, corrosion-resistant, with at least ⅜" (9.5 mm) heads, and at least 1" (25 mm) long. LandMark TL requires nails at least 1¼" long.

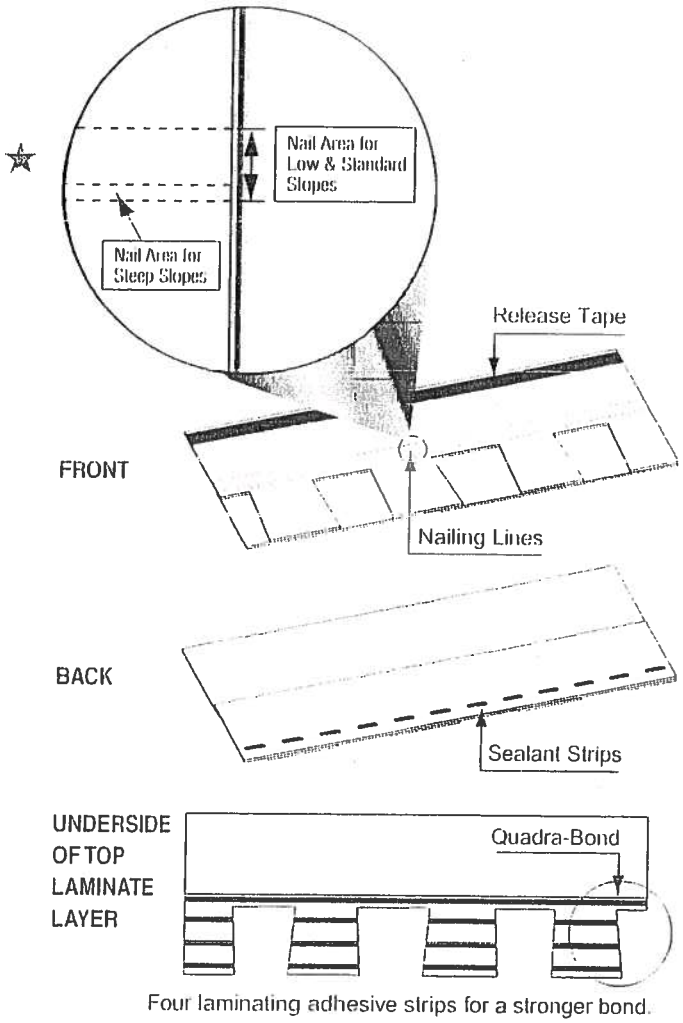

Figure 15-3: WideTrack QB™ features a wider nail area and extra-strong Quadra-Bond construction.

LOW AND STANDARD SLOPE

ENGLISH DIMENSIONS

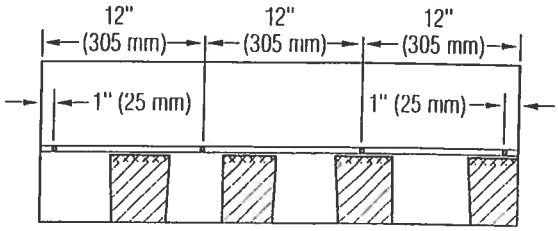

METRIC DIMENSIONS

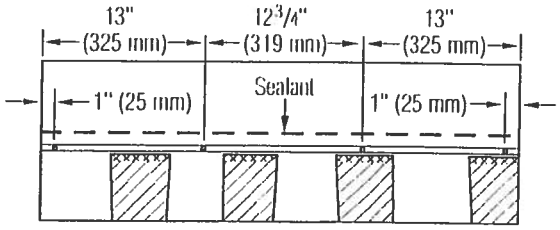

★ WideTrack QB

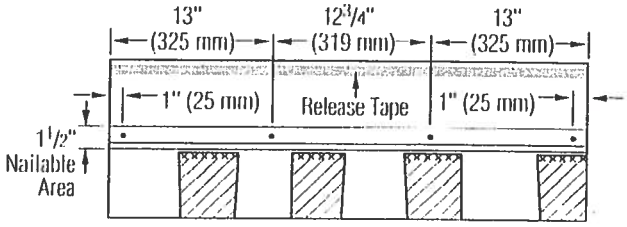

LANDMARK TL

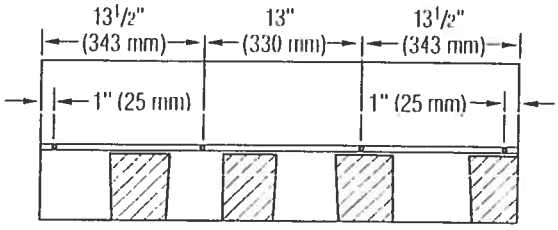

Figure 15-4: Use four nails for every full shingle.

STEEP SLOPE

Use six nails and four spots of asphalt roofing cement for every full laminated shingle. See below. Asphalt roofing cement should meet ASTM D4586 Type II. Apply 1" spots of asphalt roofing cement under each corner and at about 12" to 13" in from each edge.

ENGLISH DIMENSIONS

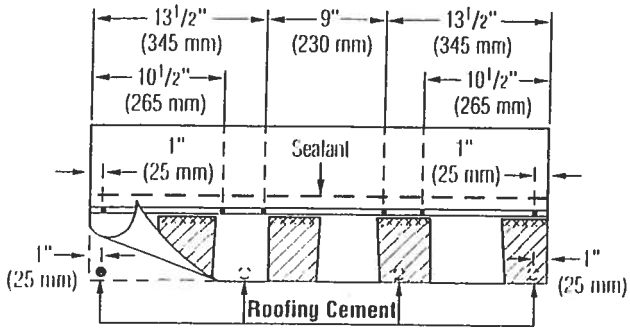

METRIC DIMENSIONS

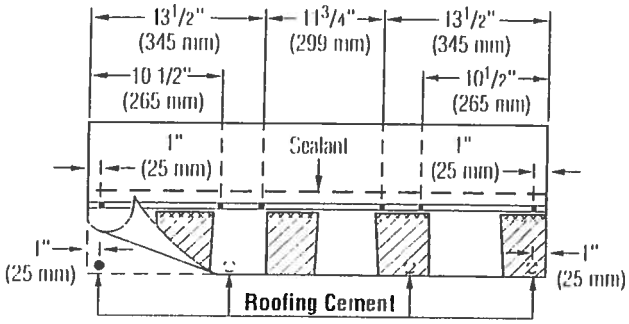

★ WideTrack QB

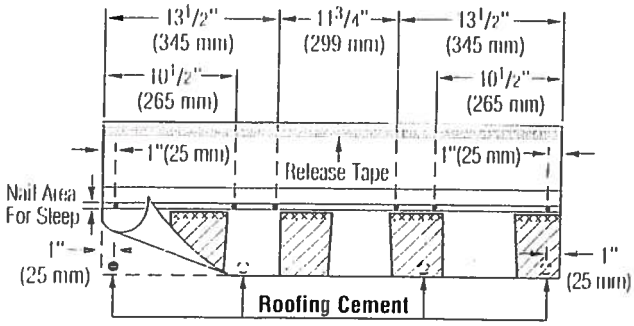

LANDMARK TL

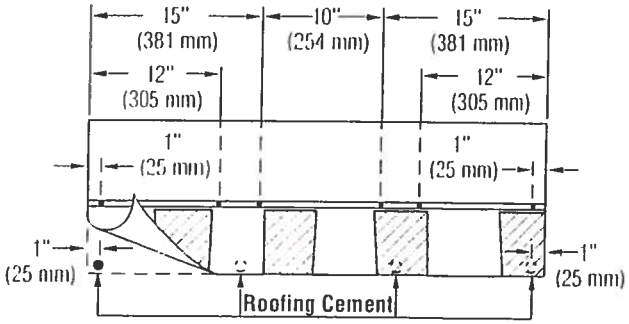

Figure 15-5: Use six nails and four spots of asphalt roofing cement on steep slopes.

CAUTION: Excessive use of roofing cement can cause shingles to blister.

ONE CLEAN-DECK APPLICATION METHOD FOR ENGLISH DIMENSION SHINGLES

FIVE-COURSE DIAGONAL METHOD ("SEVENS AND FOURTEENS")

PREPARING THE DECK:

- Apply underlayment as required. CertainTeed suggests that a layer of shingle underlayment be applied. For UL fire rating, underlayment is generally required. Apply flat and unwrinkled.
- Snap horizontal and vertical chalklines to assure shingles will be correctly aligned. Expose all shingles 5" (125 mm).

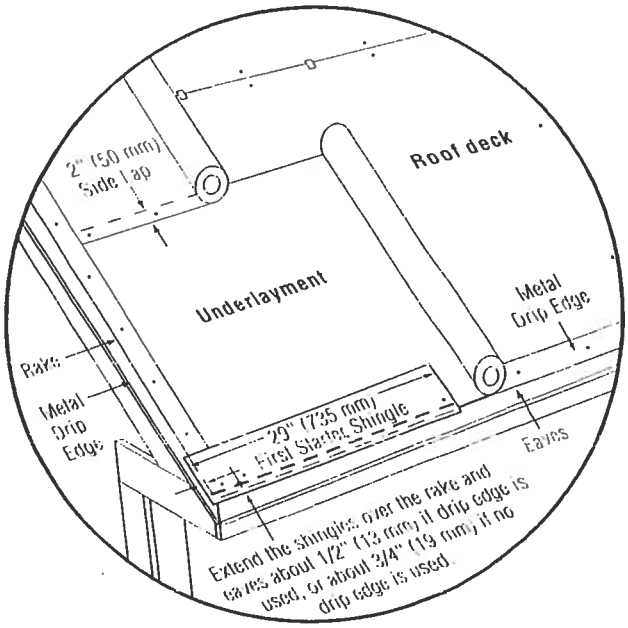

Figure 15-6: Standard slope underlayment and starter drip edge details.

STARTER COURSE:

1. Use CertainTeed Starter (pre-cut 10" x 36"), or use standard three-tab self-sealing shingles with the lower 5" tab portions removed to provide starter shingles that are 7" in height (*Figure 15-7*).

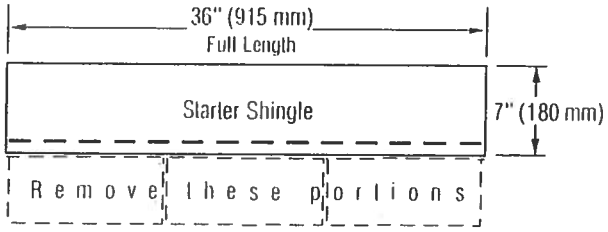

Figure 15-7: Make starter shingles by removing the lower 5" tabs.

2. For the first starter, cut 7" from one side of the starter shingles.
3. Apply the 29" piece to the lower left corner of the roof. Make sure there is 1/2" overhanging the rakes and eaves if drip edge is being used. If you are not using drip edge, make the overhang 3/4".
4. Use full 36" long, 7" wide starter shingles for the rest of the course.

1ST COURSE: Apply a full shingle at the lower left corner of the roof. Make the lower edge and left edge lie flush with the edges of the starter course *(Figure 15-8)*.

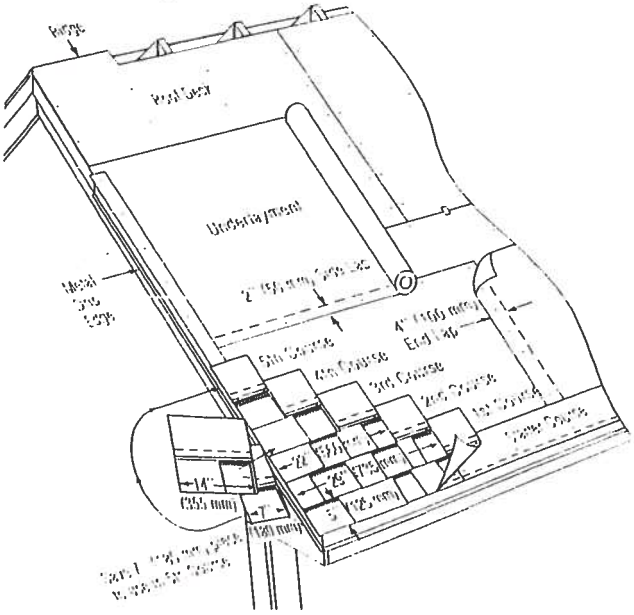

Figure 15-8: Applying the first 5 courses on a standard slope.

2ND THROUGH 5TH COURSES:

CAUTION! Failure to follow instruction steps 1-5 below will bring joints too close together and may cause unattractive patterns!

1. Cut 7" off the left end of the first shingle and save this piece for later use. Apply the 29" long piece over and above the first-course shingle. Leave the bottom 5" tab portion of the first-course shingle exposed *(Figure 15-8)*.
2. Cut 14" off the first shingle of the third course and save this for later. Install the 22" long piece over and above the second-course shingle.
3. Apply the previously removed 14" long piece over and above the third-course shingle.
4. Apply the previously removed 7" long piece from the second course over and above the fourth-course shingle.
5. Install a full shingle against the right edge of each shingle in courses one through five.

CONTINUING UP THE ROOF:

1. Beginning again with a full shingle, repeat the five-course pattern up the left rake *(Figure 15-10 – see **B** on Page 144)*.
2. Fill-in courses across the roof in a stepped diagonal fashion using full shingles *(Figure 15-10 – see **A** and **B** on Page 144)*. Do **not** run courses straight across.

IMPORTANT: Do not align joints of shingles closer than 3½" from one another.

ONE CLEAN-DECK APPLICATION METHOD FOR METRIC DIMENSION (13¼" x 38¾") AND LANDMARK TL (13¼" x 40") SHINGLES

FIVE-COURSE DIAGONAL METHOD (5⅝" AND 11¼")

PREPARING THE DECK:

- Apply underlayment as required. CertainTeed suggests that a layer of shingle underlayment be applied. For UL fire rating, underlayment is generally required. Apply flat and unwrinkled.
- Snap chalklines to assure shingles will be correctly aligned. Expose all shingles 5⅝" (143 mm).

STARTER COURSE:

1. Use CertainTeed Starter (pre-cut 10" x 38¾"), or three-tab self-sealing shingles with the lower tab portions removed. Be sure that the starter shingles are at least 7⅝" in height. *(Figure 15-9)*.

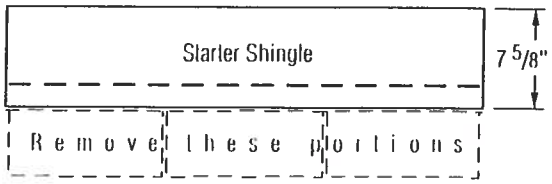

Figure 15-9: Make starter shingles that are 7⅝" in height.

2. For the first starter, cut 5⅝" from one side of the starter shingles.
3. Apply the remaining piece to the lower left corner of the roof. Make sure there is ½" overhanging the rakes and eaves if drip edge is being used. If you are not using drip edge, make the overhang ¾".
4. Use full length starter shingles for the rest of the course.

Figure 15-10: "Five-Course Diagonal Method" installation schematic.

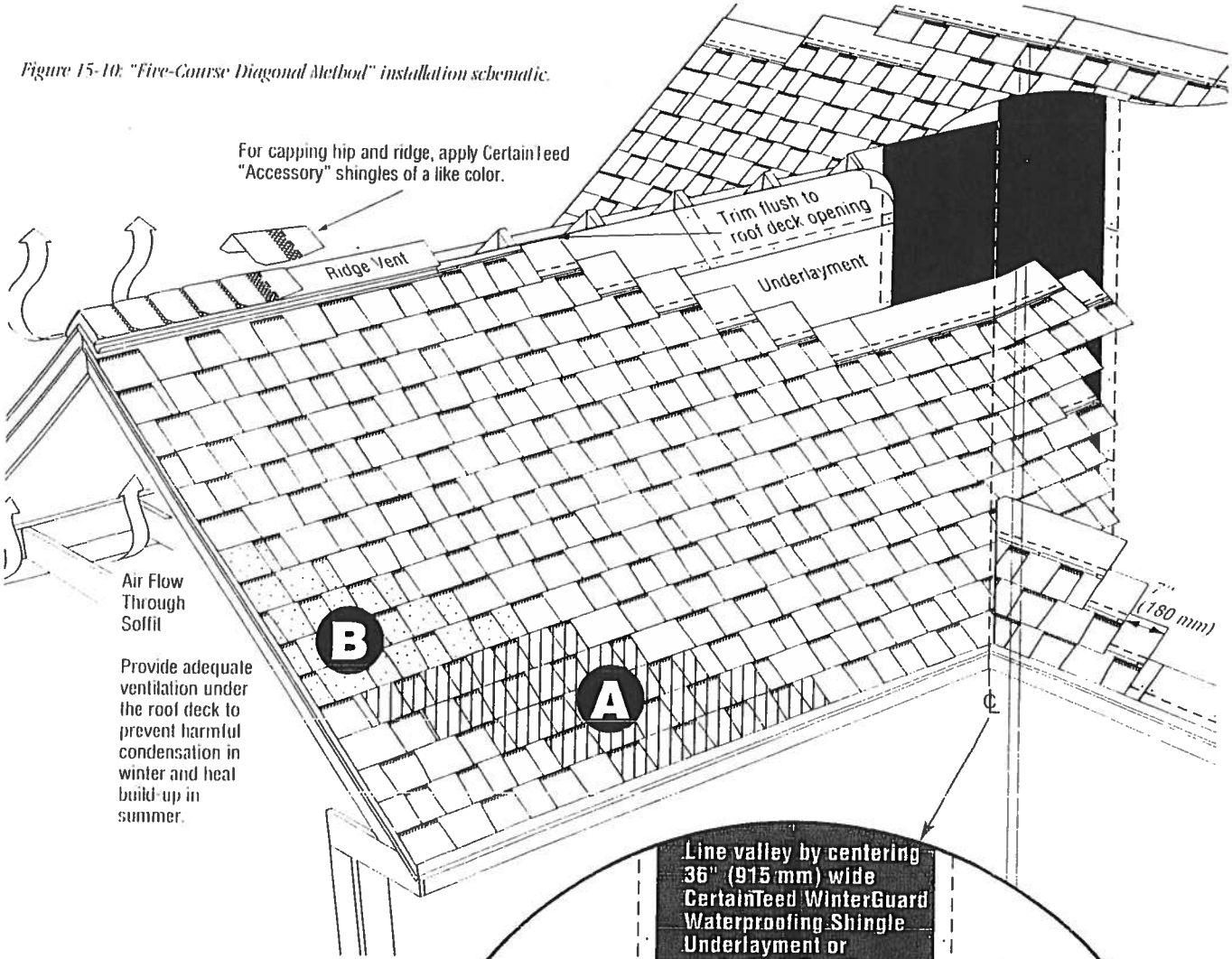

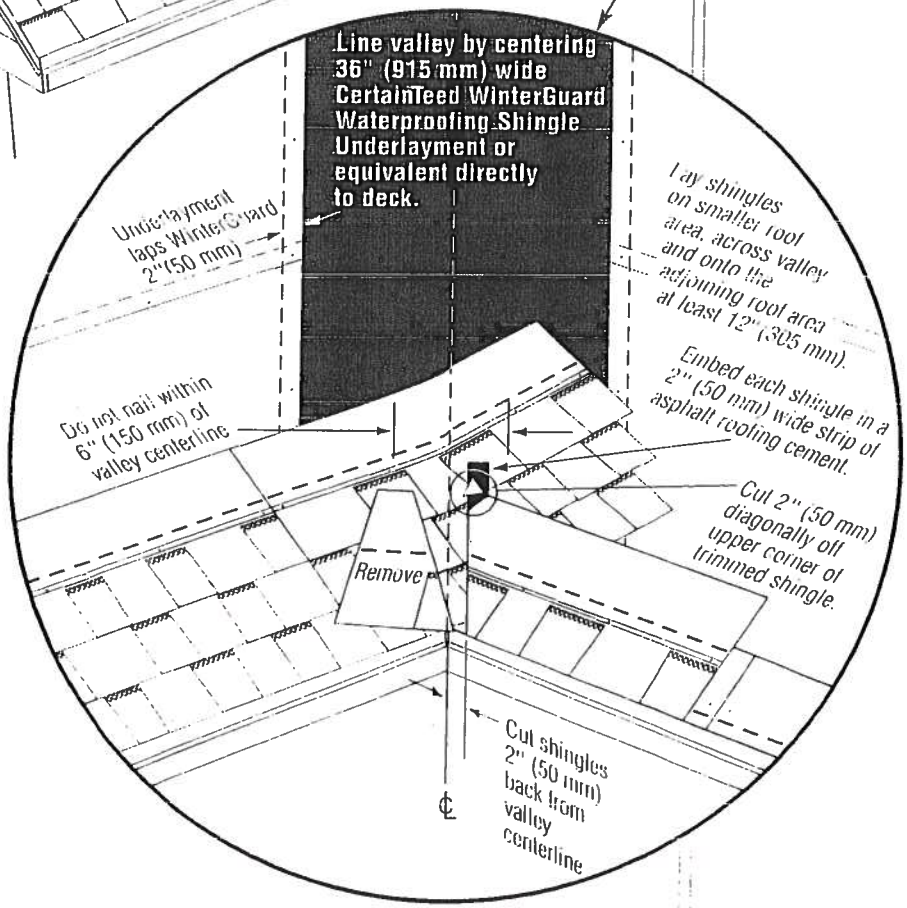

Figure 15-11: Highlight of closed-cut valley details.

1ST COURSE: Apply a full shingle at the lower left corner of the roof. Make the lower edge and left edge lie flush with the edges of the starter course *(Figure 15-12)*.

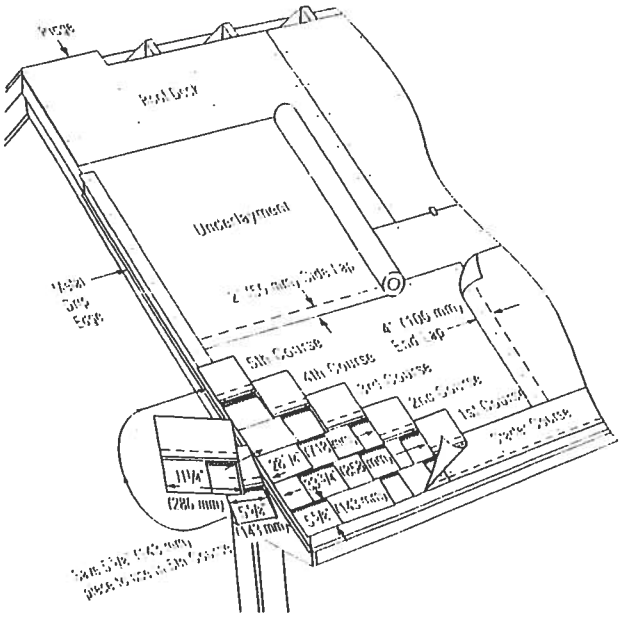

Figure 15-12: Applying the first 5 courses of ***Metric*** *dimension. Note: The LandMark TL dimensions differ (see instructions below.)*

2ND THROUGH 5TH COURSES:

CAUTION! Failure to follow instruction steps 1-5 below will bring joints too close together and may cause unattractive patterns!

1. Cut 5⅝" off the left end of the first shingle and save this piece for later use. Apply the 33⅛" (34⅛" for Landmark TL) long piece over and above the first-course shingle. Leave the bottom 5⅝" tab portion of the first-course shingle exposed *(Figure 15-12)*.
2. Cut 11¼" off the first shingle of the third course and save this for later. Install the 27½" (28¾" for Landmark TL) long piece over and above the second-course shingle.
3. Apply the previously removed 11¼" long piece over and above the third-course shingle.
4. Apply the previously removed 5⅝" long piece from the second course over and above the fourth-course shingle.
5. Install a full shingle against the right edge of each shingle in courses one through five.

CONTINUING UP THE ROOF:

1. Beginning again with a full shingle, repeat the five-course pattern up the left rake.
2. Fill-in courses across the roof in a stepped diagonal fashion using full shingles. Do **not** run courses straight across.

IMPORTANT: Do not align joints of shingles closer than 3½" from one another.

CHIMNEY FLASHING

Metal Step Flashing

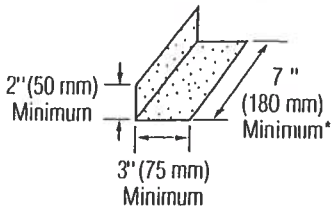

Figure 15-13: Step flashing minimum dimensions.

***NOTE:** Use 7⅝" or more for Metric dimension and LandMark TL shingles.

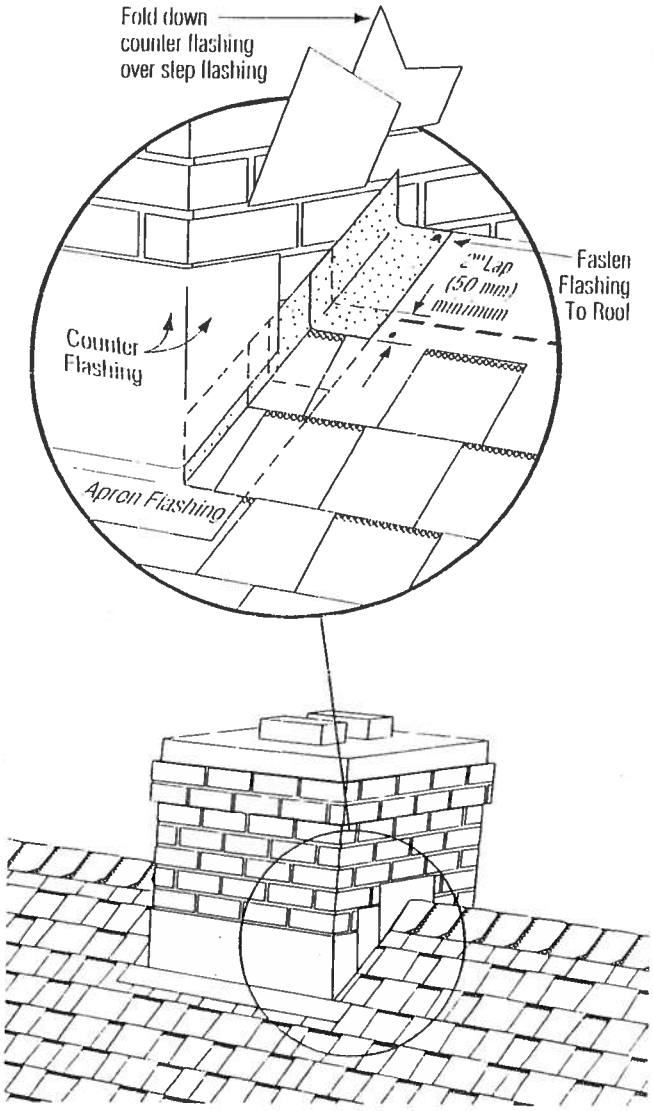

Figure 15-14: Flashing around a chimney.

ONE ROOF-OVER METHOD FOR ENGLISH DIMENSION SHINGLES

PREPARING THE ROOF SURFACE FOR REROOFING

- Make the surface of the old roof as smooth as possible by replacing missing shingles. Split and nail flat all buckled, raised tabs and curling shingles.
- It's a good idea to cut old shingles back flush to the rakes and eaves.
- We suggest that you apply corrosion-resistant drip edge along the rakes and eaves, covering the edges of the old shingles. This will provide a uniform and straight edge that will help prevent water from seeping under the shingle edges.

"NESTING" COMBINED WITH THE FIVE-COURSE DIAGONAL METHOD ("SEVENS AND FOURTEENS")

NOTE: Nesting is preferred over "bridging" methods when reroofing because nesting sheds water best and looks better. Nesting, as described below, is an easy application over square-tab asphalt strip shingles with a 5" exposure. If you are covering a different type or size shingle, you may need to cut back the tabs so that nesting is possible. To do this, simply cut off the leading edge of all old shingles when they are lapped less than 2 1/2" by the new shingles. This permits a flat nested application that avoids lifted edges and slumps.

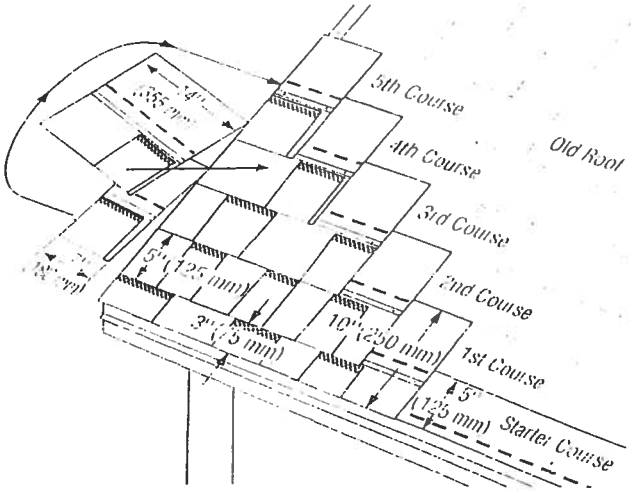

Figure 15-15: Five-Course Diagonal, Nested.

STARTER COURSE:

1. Remove the tabs and the top 2" from standard self-sealing shingles, leaving 5" by 36" strips.
2. Cut 7" off the length of the first strip, apply the 29" remaining piece over the old first course at the lower left corner, overhanging the rakes and eaves 1/2" if drip edge is used, or 3/4" if no drip edge is used.
3. Continue with full-length starter shingles along the eaves

1ST COURSE:

1. The first-course shingles are made of full LandMark shingles with 2" cut off the bottom of the tabs.
2. Align the first-course strips with the left and lower edges flush with the starter course.

2ND THROUGH 5TH COURSES:

CAUTION! Failure to follow instruction steps 1-5 below will bring joints too close together and may cause unattractive patterns!

1. Cut 7" off the left end of the first shingle and save this piece for later use. Apply the 29" long piece over and above the first-course shingle. For this and all succeeding courses, align the top edge of the shingle to be applied with the bottom edge of old shingles in the next course. Exposure of first course only is reduced to 3".
2. Cut 14" off the first shingle of the third course and save this for later. Install the 22" long piece over and above the second-course shingle.
3. Apply the previously removed 14" long piece over and above the third-course shingle.
4. Apply the previously removed 7" long piece from the second course over and above the fourth-course shingle.
5. Install a full shingle against the right edge of each shingle in courses one through five. Remember that course one shingles are only 10" wide.

CONTINUING UP THE ROOF:

1. Beginning again with a full shingle, repeat the five-course pattern up the left rake.
2. Fill-in courses across the roof in a stepped diagonal fashion using full shingles. Do **not** run courses straight across.

IMPORTANT: Do not align joints of shingles closer than 3 1/2" from one another.

ONE ROOF-OVER METHOD FOR METRIC DIMENSION AND LANDMARK TL SHINGLES

The same method used for clean-deck application of these shingles are used for roof-overs. Application of these shingles ***over*** English dimension shingles is not recommended — due to the high cost of workmanship and greater risk of worker error.

HIPS AND RIDGES

SHADOW RIDGE™ ACCESSORY SHINGLES FOR HIPS AND RIDGES

Shadow Ridge shingles have an accented shadow line that is designed to complement these shingles. Simply fold along the pre-cut lines and detach individual cap pieces. Save valuable installation time compared to cutting 3-tab shingles.

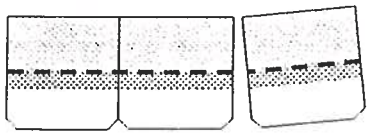

Figure 15-16: Shadow Ridge accessory shingles detach easily from three-piece units to make 72 individual cap pieces.

There are 24 three-piece units in each Shadow Ridge bundle, providing 72 individual caps that will cover 30 linear feet (33¾ linear feet, Metric) of a hip or ridge. Each English dimension cap piece is 12" by 12" (Metric caps are 13¼" by 9⅞") and features clipped corners on the bottom edge of the exposed portion.

APPLICATION IS AS FOLLOWS:

1. Apply shingles up to the hip or ridge on both sides, then trim flush.

   NOTE: The last course of shingles should have an exposure of 5" (5⅝" for metric) or less when the shingle cap or ridge vent is fastened in place. Otherwise, a potential water leak could occur at exposed shingle end joints. The figures used in this section illustrate the application of accessory shingles over a ridge vent; application directly to the roof deck is very similar.

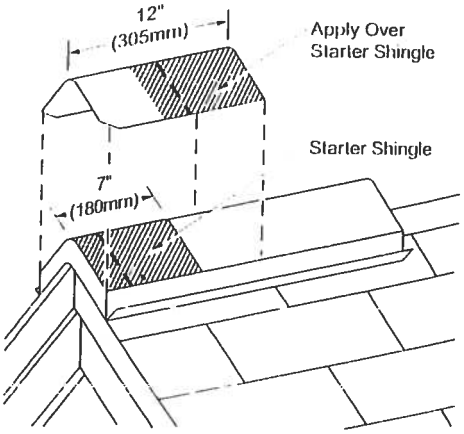

Figure 15-17: Apply a full cap shingle over the starter piece, flush with the bottom and side edges of the starter.

2. Install caps beginning at the bottom of a hip or at either end of a ridge. Apply a starter piece that has the bottom 5" (5⅝" for metric) removed (*Figure 15-18*). Fasten the starter with two nails located about 3" from the rake edge, and 1" in from each side edge. Make sure fasteners used to apply caps penetrate at least ¾" into or through the decking.

   NOTE: To assist in proper alignment when ridge vent is not used, snap a chalk line parallel to the hip or ridge along the line where the side edges of the cap shingles should be.

3. Apply a full cap shingle over the starter (*Figure 15-18*), and place fasteners at 5⅝" (6¼" for metric) up from the exposed bottom edge and 1" in from each side. Nails must not be exposed on the finished roof. All nail heads must be driven straight and must not cut into the shingle surface.

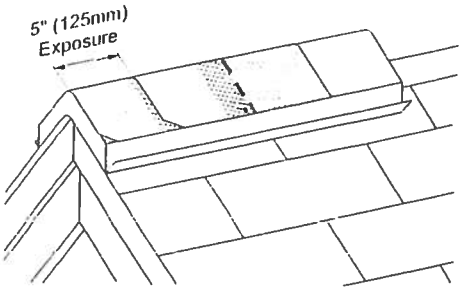

Figure 15-18: Install cap shingles at their correct exposure and cover all fasteners.

NOTE: Each cap has a laying/alignment notch at the top edge to center the piece on the ridge line, and two notches on each side to indicate the correct exposure and shadow-line placement (*Figure 15-19*). The side notches of the cap being applied should be aligned with the top edge of the previously applied cap.

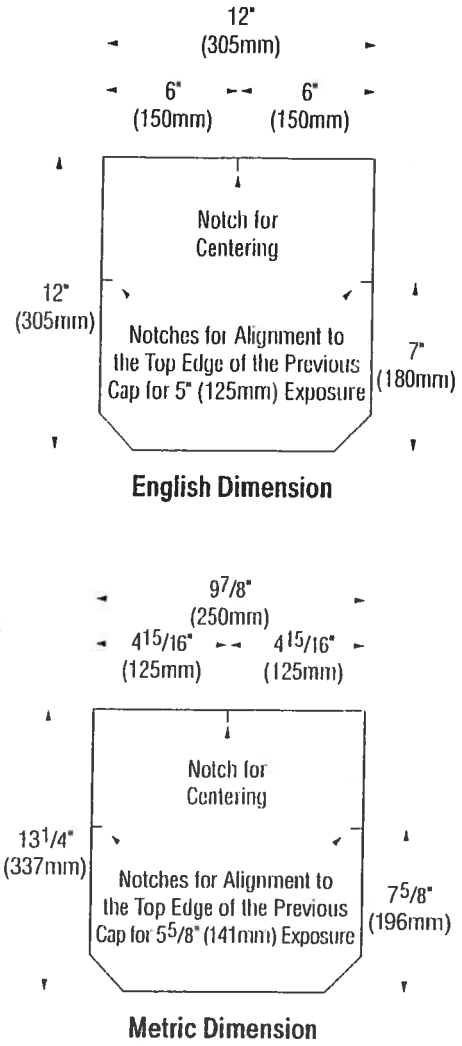

Figure 15-19: Each Shadow Ridge shingle has a centering notch and two side alignment notches to help ensure proper placement.

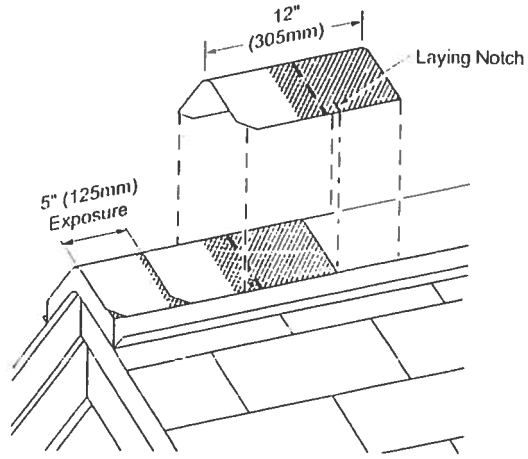

Figure 15-20: Use laying notches to center shingles on hips and ridges, and to locate the correct exposure.

CONTOURRIDGE™

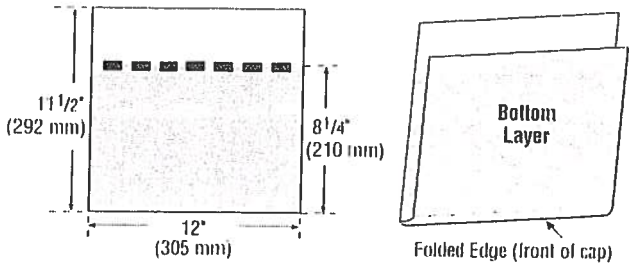

Figure 15-21: There are 30 cap shingles per bundle of ContourRidge that covers 20 linear feet of hip or ridge at an 8" exposure.

APPLICATION IS AS FOLLOWS:

1. Install the first cap at the eaves for hips and opposite the prevailing wind for ridges. Fasten with one nail applied on each side of the cap shingle 8 1/4" back from exposed end and 1" up from the lower edge.
2. Apply the next cap shingle so the folded front edge covers the sealant stripe resulting in an 8" exposure. Fasten with one nail applied on each side of the cap shingle 8 1/4" back from exposed end and 1" up from the lower edge. Fasteners used to apply caps must penetrate at least 3/4" into the roof deck or completely through.

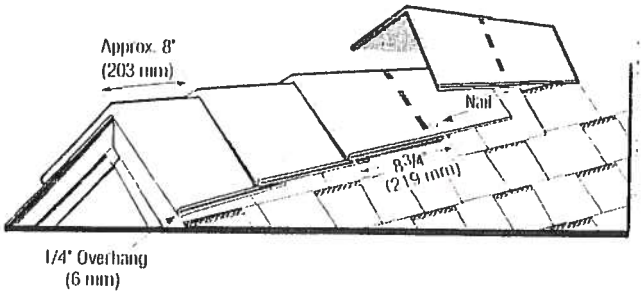

Fig 15-22: The extra exposure and thickness of ContourRidge enhances the rooflines and saves installation time.

3. Continue in the same fashion using the sealant stripe as a gauge to install cap shingles at an 8" exposure.

ITW Building Components Group, Inc.

1950 Marley Drive Haines City, FL 33844
Florida Engineering Certificate of Authorization Number: 567
Florida Certificate of Product Approval # FL1999
 Document ID:1TA3215-Z0122085744

Truss Fabricator:	W.B. Howland
Job Identification:	REPAIR/4641
Truss Count:	1
Model Code:	Standard Building Code
Truss Criteria:	ANSI/TPI-2002(STD)
Engineering Software:	Alpine Software,Version 7.40.
Structural Engineer of Record:	The identity of the structural EOR did not exist as of
Address:	the seal date per section 61G15-31.003(5a) of the FAC
Minimum Design Loads:	Roof - 40.0 PSF @ 1.25 Duration
	Floor - N/A
	Wind - 110 MPH ASCE 7-02 -Closed

Seal Date: 08/22/2007

-Truss Design Engineer-
James F. Collins Jr.
Florida License Number: 52212
1950 Marley Drive
Haines City, FL 33844

Notes:

1. Determination as to the suitability of these truss components for the structure is the responsibility of the building designer/engineer of record, as defined in ANSI/TPI 1
2. The drawing date shown on this index sheet must match the date shown on the individual truss component drawing.
3. As shown on attached drawings; the drawing number is preceded by: HCUSR215

Details: CNBRGBLK-BRCLBSUB-

#	Ref	Description	Drawing#	Date
1	24467--A28		07234023	08/22/07

permit # 000026052

Repair Charge: $45.00 per Customer Agreement.
Amount to be invoiced separately.

ITW Building Components Group, Inc.

1950 Marley Drive Haines City, FL 33844
Florida Engineering Certificate of Authorization Number: 567
 Document ID:1TA3215-Z0122085744

Truss Fabricator: W.B. Howland
Job Identification: REPAIR/4641 (REPAIR/4641-)
Truss Count: 1
Model Code: Standard Building Code
Truss Criteria: ANSI/TPI-2002(STD)
Engineering Software: Alpine Software,Version 7.40.
Structural Engineer of Record:
Address:
Minimum Design Loads: Roof - 40.0 PSF @ 1.25 Duration
Floor - N/A
Wind - 110 MPH ASCE 7-02 -Closed

Seal Date: 08/22/2007

-Truss Design Engineer-
James F. Collins Jr.
Florida License Number: 52212
1950 Marley Drive
Haines City, FL 33844

Notes:

1. Determination as to the suitability of these truss components for the structure is the responsibility of the building designer/engineer of record, as defined in ANSI/TPI 1
2. The drawing date shown on this index sheet must match the date shown on the individual truss component drawing.
3. As shown on attached drawings; the drawing number is preceded by: HCUSR215

Revised Trusses

#	Ref	Description	Drawing#	Date
1	24467--A28		07234023	08/22/07

Repair Charge: $45.00 per Customer Agreement.
Amount to be invoiced separately.

(REPAIR/4641 A28)

THIS DWG PREPARED FROM COMPUTER INPUT (LOADS & DIMENSIONS) SUBMITTED BY TRUSS MFR.

REPAIR TO TRIM VERTICAL WEB 2" AS SHOWN BELOW

FIELD REPAIR MUST COMPLY WITH ALPINE DESIGNS AND SPECIFICATIONS.

REFER TO DRAWING HCUSR215 07176047 FOR LUMBER, PLATES AND OTHER DATA NOT GIVEN HERE.

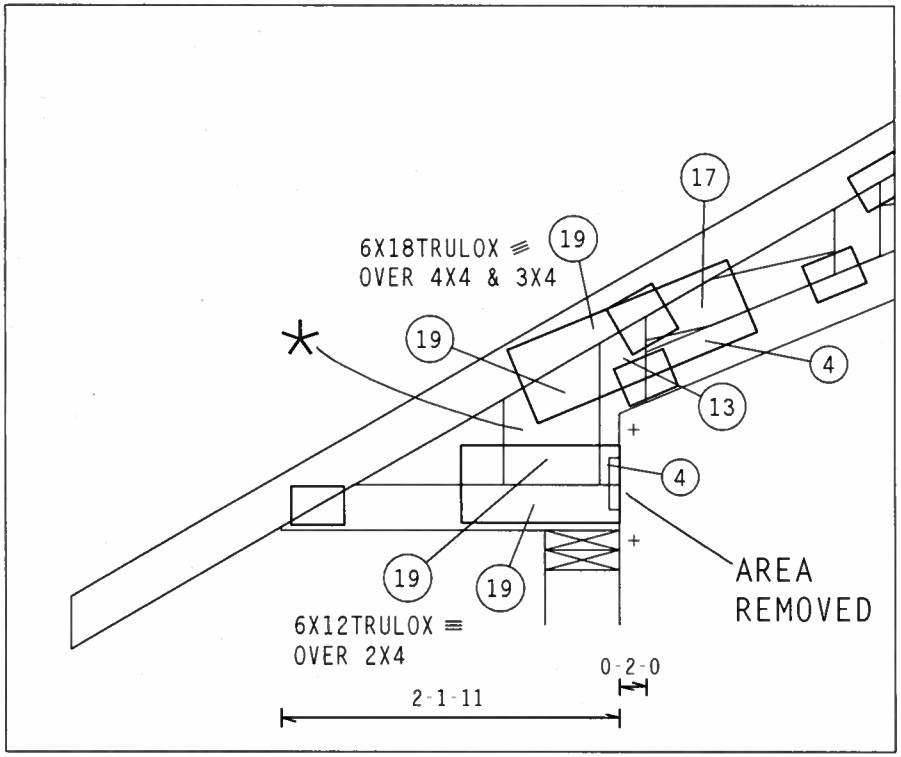

2 COMPLETE TRUSSES REQUIRED

Prior to and during repair operation, this truss and any supported spans must be temporarily braced and shored. The design and positioning of such shall be designed and supplied by others.

+ USE A SHARP METAL CUTTING SAW BLADE TO CAREFULLY REMOVE UNWANTED MATERIAL FROM THE TRUSS AS SHOWN DASHED. REMAINING PORTIONS OF TRUSS MUST BE FREE FROM DAMAGE.

* TWO (1) 2x8x(CUT TO FIT) SP #2 BETTER LUMBER. FIRST CONNECT PLYS WITH ONE ROW OF .131"x3" GUN NAILS AT 3" O.C. NEXT ATTACH WITH TRULOX PLATES AS SHOWN AND DIRECTED.

11 GAUGE (0.120")X1.375" NAILS REQUIRED FOR TRULOX PLATE ATTACHMENT. CIRCLED NUMBERS SHOW NUMBER REQUIRED ON NEAR FACE, SAME NUMBER REQUIRED ON FAR FACE. REFER TO DRAWING 160TL FOR TRULOX INFORMATION.

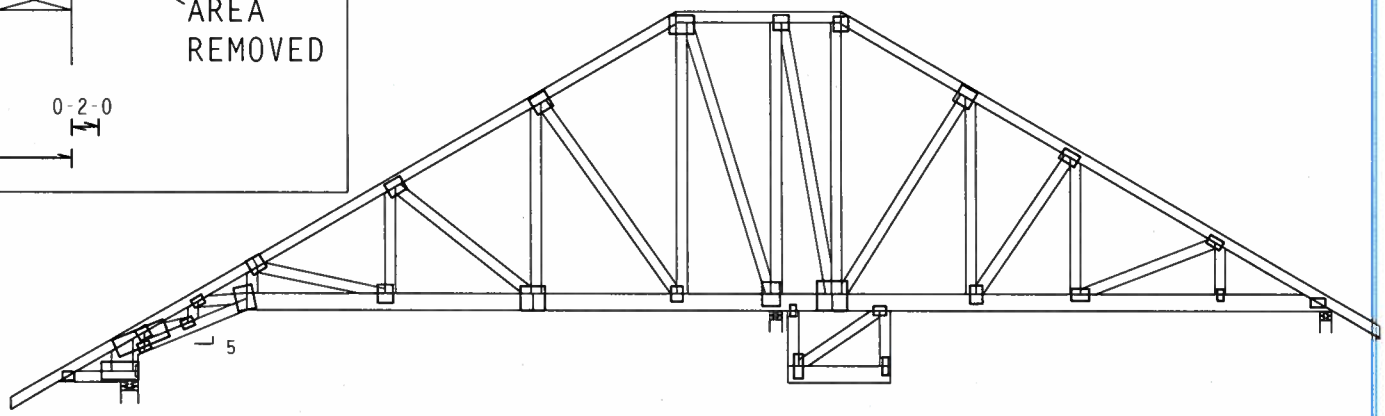

R=2325 U=1163 W=5.657"

R=13019 U=6510 W=4"

R=2450 U=1225 W=4"

Design Crit: TPI-2002(STD)

PLT TYP. Wave Cq/RT=1.00(1.25)/10(0) 7.40.0722 QTY:1 FL/-/5/-/-/R/F Scale =.1875"/Ft.

ALPINE

ITW Building Components Group, Inc.
Haines City, FL 33844
FL Certificate of Authorization # 567

TRUSS REPAIR

DAMAGED TRUSSES MUST BE CAREFULLY EVALUATED TO DETERMINE THE EXTENT OF DAMAGE AND THE FEASIBILITY OF REPAIR. IN SOME CASES THE PRUDENT SOLUTION IS TO SCRAP THE DAMAGED TRUSSES AND REBUILD. INTERNAL WOOD FIBER DAMAGE AND EXCESSIVE CONNECTOR STRESS FROM BENDING OR SHOCK CANNOT BE READILY DETECTED. THEREFORE, IT IS VITAL THAT THE TRUSS FABRICATOR AND BUILDING CONTRACTOR CONSIDER THE CAUSE OF THE DAMAGE IN THEIR DECISION WHETHER TO REPAIR OR REBUILD.

REPAIR WORK SHOWN ON THIS DRAWING APPLIES ONLY TO THOSE SECTIONS OF THE TRUSS REPORTED BY THE TRUSS MANUFACTURER TO HAVE BEEN DAMAGED. A QUALIFIED THIRD PARTY INSPECTOR SHALL CHECK TRUSSES TO DETERMINE THE EXTENT OF ANY FURTHER DAMAGE, IF ANY, AND VERIFY THAT REPAIRS HAVE BEEN PERFORMED AS INDICATED ON THIS DRAWING.

JAMES F. COLLINS, JR. LICENSE No 52212 STATE OF FLORIDA PROFESSIONAL ENGINEER

Aug 22 '07

TC LL	20.0 PSF	REF R215-- 24467
TC DL	10.0 PSF	DATE 08/22/07
BC DL	10.0 PSF	DRW HCUSR215 07234023
BC LL	0.0 PSF	HC-ENG WHK/WHK
TOT.LD.	40.0 PSF	SEQN- 10085 REV
DUR.FAC.	1.25	FROM CDM
SPACING	SEE ABOVE	JREF- 1TA3215_Z01

BEARING BLOCK NAIL SPACING DETAIL

MINIMUM SPACING FOR SINGLE BEARING BLOCK IS SHOWN. DOUBLE NAIL SPACINGS AND STAGGER NAILING FOR TWO BLOCKS. GREATER SPACING MAY BE REQUIRED TO AVOID SPLITTING.

A – EDGE DISTANCE AND SPACING BETWEEN STAGGERED ROWS OF NAILS (6 NAIL DIAMETERS)
B – SPACING OF NAILS IN A ROW (12 NAIL DIAMETERS)
C – END DISTANCE (15 NAIL DIAMETERS)

IF NAIL HOLES ARE PREBORED, SOME SPACING MAY BE REDUCED BY THE AMOUNTS GIVEN BELOW:
- * SPACING MAY BE REDUCED BY 50%
- ** SPACING MAY BE REDUCED BY 33%

BEARING BLOCK TO BE SAME SIZE AND SPECIES AS BOTTOM CHORD. BLOCKS MAY BE ANY GRADE WITHIN THE SPECIES, PROVIDED THE COMPRESSION PERPENDICULAR TO GRAIN VALUE (Fc-perp) IS AT LEAST THAT OF THE CHORD.

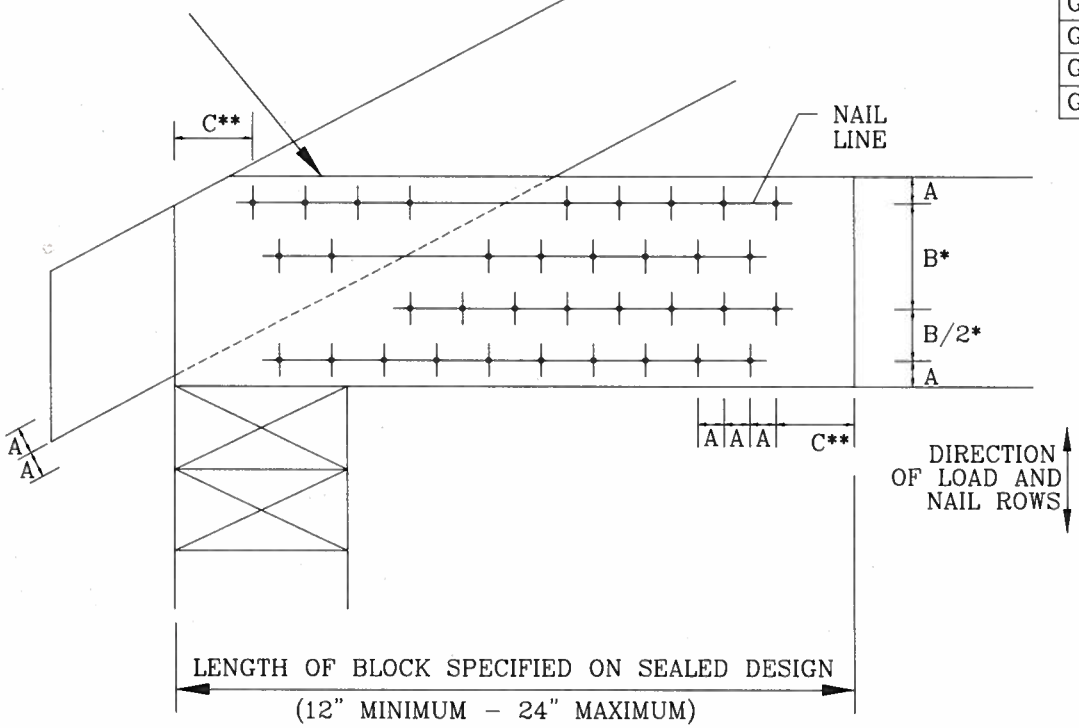

MAXIMUM NUMBER OF NAIL LINES PARALLEL TO GRAIN

NAIL TYPE	CHORD SIZE 2X4	2X6	2X8	2X10	2X12
8d BOX (0.113"X 2.5",MIN)	3	6	9	12	15
10d BOX (0.128"X 3.",MIN)	3	5	7	10	12
12d BOX (0.128"X 3.25",MIN)	3	5	7	10	12
16d BOX (0.135"X 3.5",MIN)	3	5	7	10	12
20d BOX (0.148"X 4.",MIN)	2	4	5	6	8
8d COMMON (0.131"X 2.5",MIN)	3	5	7	10	12
10d COMMON (0.148"X 3.",MIN)	2	4	6	8	10
12d COMMON (0.148"X 3.25",MIN)	2	4	6	8	10
16d COMMON (0.162"X 3.5",MIN)	2	4	6	8	10
GUN (0.120"X 2.5",MIN)	3	6	8	11	14
GUN (0.131"X 2.5",MIN)	3	5	7	10	12
GUN (0.120"X 3.",MIN)	3	6	8	11	14
GUN (0.131"X 3.",MIN)	3	5	7	10	12

MINIMUM NAIL SPACING DISTANCES

NAIL TYPE	DISTANCES A	B*	C**
8d BOX (0.113"X 2.5",MIN)	3/4"	1 3/8"	1 3/4"
10d BOX (0.128"X 3.",MIN)	7/8"	1 5/8"	2"
12d BOX (0.128"X 3.25",MIN)	7/8"	1 5/8"	2"
16d BOX (0.135"X 3.5",MIN)	7/8"	1 5/8"	2 1/8"
20d BOX (0.148"X 4.",MIN)	1"	1 7/8"	2 1/4"
8d COMMON (0.131"X 2.5",MIN)	7/8"	1 5/8"	2"
10d COMMON (0.148"X 3.",MIN)	1"	1 7/8"	2 1/4"
12d COMMON (0.148"X 3.25",MIN)	1"	1 7/8"	2 1/4"
16d COMMON (0.162"X 3.5",MIN)	1'	2"	2 1/2"
GUN (0.120"X 2.5",MIN)	3/4"	1 1/2"	1 7/8"
GUN (0.131"X 2.5",MIN)	7/8"	1 5/8"	2"
GUN (0.120"X 3.",MIN)	3/4"	1 1/2"	1 7/8"
GUN (0.131"X 3.",MIN)	7/8"	1 5/8"	2"

THIS DRAWING REPLACES DRAWING B139 AND CNBRGBLK0699

ALPINE
ITW BUILDING COMPONENTS GROUP, INC.
POMPANO BEACH, FLORIDA

WARNING TRUSSES REQUIRE EXTREME CARE IN FABRICATING, HANDLING, SHIPPING, INSTALLING AND BRACING. REFER TO BCSI (BUILDING COMPONENT SAFETY INFORMATION), PUBLISHED BY TPI (TRUSS PLATE INSTITUTE, 218 NORTH LEE STR., SUITE 312 ALEXANDRIA, VA. 22314) AND WTCA (WOOD TRUSS COUNCIL OF AMERICA, 6300 ENTERPRISE LN, MADISON, WI 53719) FOR SAFETY PRACTICES PRIOR TO PERFORMING THESE FUNCTIONS. UNLESS OTHERWISE INDICATED, TOP CHORD SHALL HAVE PROPERLY ATTACHED STRUCTURAL PANELS AND BOTTOM CHORD SHALL HAVE A PROPERLY ATTACHED RIGID CEILING.

IMPORTANT FURNISH COPY OF THIS DESIGN TO INSTALLATION CONTRACTOR. ITW BCG, INC. SHALL NOT BE RESPONSIBLE FOR ANY DEVIATION FROM THIS DESIGN; ANY FAILURE TO BUILD THE TRUSS IN CONFORMANCE WITH TPI; OR FABRICATING, HANDLING, SHIPPING, INSTALLING & BRACING OF TRUSSES. DESIGN CONFORMS WITH APPLICABLE PROVISIONS OF NDS (NATIONAL DESIGN SPEC, BY AF&PA) AND TPI. ITW, BCG CONNECTOR PLATES ARE MADE OF 20/18/16GA (W,H/SS/K) ASTM A653 GRADE 40/60 (W,K/H,SS) GALV. STEEL. APPLY PLATES TO EACH FACE OF TRUSS AND, UNLESS OTHERWISE LOCATED ON THIS DESIGN, POSITION PER DRAWINGS 160A-Z. ANY INSPECTION OF PLATES FOLLOWED BY (I) SHALL BE PER ANNEX A3 OF TPI 1-2002 SEC. 3. A SEAL ON THIS DRAWING INDICATES ACCEPTANCE OF PROFESSIONAL ENGINEERING RESPONSIBILITY SOLELY FOR THE TRUSS COMPONENT DESIGN SHOWN. THE SUITABILITY AND USE OF THIS COMPONENT FOR ANY BUILDING IS THE RESPONSIBILITY OF THE BUILDING DESIGNER, PER ANSI/TPI 1 SEC. 2.

JAMES F. COLLINS, JR. LICENSE No. 52212 STATE OF FLORIDA PROFESSIONAL ENGINEER

REF	BEARING BLOCK
DATE	2/23/07
DRWG	CNBRGBLK0207
-ENG	SJP/KAR

CLB WEB BRACE SUBSTITUTION

THIS DETAIL IS TO BE USED WHEN CONTINUOUS LATERAL BRACING (CLB) IS SPECIFIED ON AN ALPINE TRUSS DESIGN BUT AN ALTERNATIVE WEB BRACING METHOD IS DESIRED.

NOTES:

THIS DETAIL IS ONLY APPLICABLE FOR CHANGING THE SPECIFIED CLB SHOWN ON SINGLE PLY SEALED DESIGNS TO T-BRACING OR SCAB BRACING.

ALTERNATIVE BRACING SPECIFIED IN CHART BELOW MAY BE CONSERVATIVE. FOR MINIMUM ALTERNATIVE BRACING, RE-RUN DESIGN WITH APPROPRIATE BRACING.

WEB MEMBER SIZE	SPECIFIED CLB BRACING	ALTERNATIVE BRACING T OR L-BRACE	ALTERNATIVE BRACING SCAB BRACE
2X3 OR 2X4	1 ROW	2X4	1-2X4
2X3 OR 2X4	2 ROWS	2X6	2-2X4
2X6	1 ROW	2X4	1-2X6
2X6	2 ROWS	2X6	2-2X4(*)
2X8	1 ROW	2X6	1-2X8
2X8	2 ROWS	2X6	2-2X6(*)

T-BRACE, L-BRACE AND SCAB BRACE TO BE SAME SPECIES AND GRADE OR BETTER THAN WEB MEMBER UNLESS SPECIFIED OTHERWISE ON ENGINEER'S SEALED DESIGN.

(*) CENTER SCAB ON WIDE FACE OF WEB. APPLY (1) SCAB TO EACH FACE OF WEB.

T-BRACING OR L-BRACING:

APPLY TO EITHER SIDE OF WEB NARROW FACE. ATTACH WITH 10d BOX OR GUN (0.128"x 3.",MIN) NAILS. AT 6" O.C. BRACE IS A MINIMUM 80% OF WEB MEMBER LENGTH

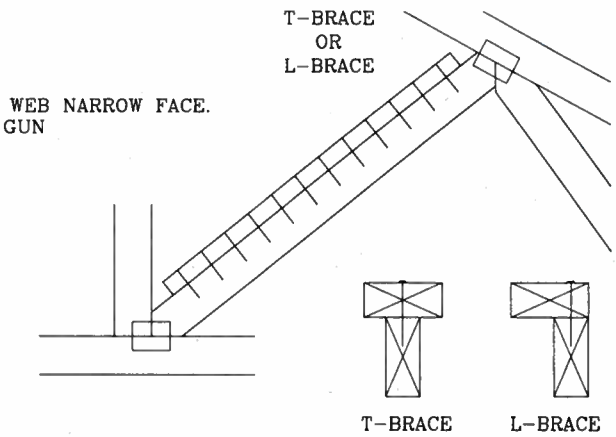

SCAB BRACING:

APPLY SCAB(S) TO WIDE FACE OF WEB. NO MORE THAN (1) SCAB PER FACE. ATTACH WITH 10d BOX OR GUN (0.128"x 3.",MIN) NAILS. AT 6" O.C. BRACE IS A MINIMUM 80% OF WEB MEMBER LENGTH

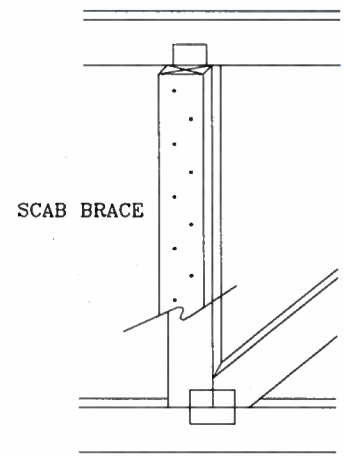

THIS DRAWING REPLACES DRAWING 579,640

ALPINE

ITW BUILDING COMPONENTS GROUP, INC.
POMPANO BEACH, FLORIDA

WARNING TRUSSES REQUIRE EXTREME CARE IN FABRICATING, HANDLING, SHIPPING, INSTALLING AND BRACING. REFER TO BCSI (BUILDING COMPONENT SAFETY INFORMATION), PUBLISHED BY TPI (TRUSS PLATE INSTITUTE, 218 NORTH LEE STR., SUITE 312, ALEXANDRIA, VA. 22314) AND WTCA (WOOD TRUSS COUNCIL OF AMERICA, 6300 ENTERPRISE LN, MADISON, WI 53719) FOR SAFETY PRACTICES PRIOR TO PERFORMING THESE FUNCTIONS. UNLESS OTHERWISE INDICATED, TOP CHORD SHALL HAVE PROPERLY ATTACHED STRUCTURAL PANELS AND BOTTOM CHORD SHALL HAVE A PROPERLY ATTACHED RIGID CEILING.

IMPORTANT FURNISH COPY OF THIS DESIGN TO INSTALLATION CONTRACTOR. ITW BCG, INC., SHALL NOT BE RESPONSIBLE FOR ANY DEVIATION FROM THIS DESIGN; ANY FAILURE TO BUILD THE TRUSS IN CONFORMANCE WITH TPI; OR FABRICATING, HANDLING, SHIPPING, INSTALLING & BRACING OF TRUSSES. DESIGN CONFORMS WITH APPLICABLE PROVISIONS OF NDS (NATIONAL DESIGN SPEC. BY AF&PA) AND TPI. ITW, BCG CONNECTOR PLATES ARE MADE OF 20/18/16GA (W,H/SS/K) ASTM A653 GRADE 40/60 (W,K/H,SS) GALV. STEEL. APPLY PLATES TO EACH FACE OF TRUSS AND, UNLESS OTHERWISE LOCATED ON THIS DESIGN, POSITION PER DRAWINGS 160A-Z. ANY INSPECTION OF PLATES FOLLOWED BY (I) SHALL BE PER ANNEX A3 OF TPI 1-2002 SEC. 3. A SEAL ON THIS DRAWING INDICATES ACCEPTANCE OF PROFESSIONAL ENGINEERING RESPONSIBILITY SOLELY FOR THE TRUSS COMPONENT DESIGN SHOWN. THE SUITABILITY AND USE OF THIS COMPONENT FOR ANY BUILDING IS THE RESPONSIBILITY OF THE BUILDING DESIGNER, PER ANSI/TPI 1 SEC. 2.

JAMES E. COLLINS, JR. LICENSE No. 52212 STATE OF FLORIDA PROFESSIONAL ENGINEER

TC LL	PSF	REF	CLB SUBST.
TC DL	PSF	DATE	2/23/07
BC DL	PSF	DRWG	BRCLBSUB0207
BC LL	PSF	-ENG	MLH/KAR
TOT. LD.	PSF		
DUR. FAC.			
SPACING			

Wind Load Analysis and Certification

Morris Residence by Hartley Bros Construction
+ Wall Detail for Uplift

9/5/07

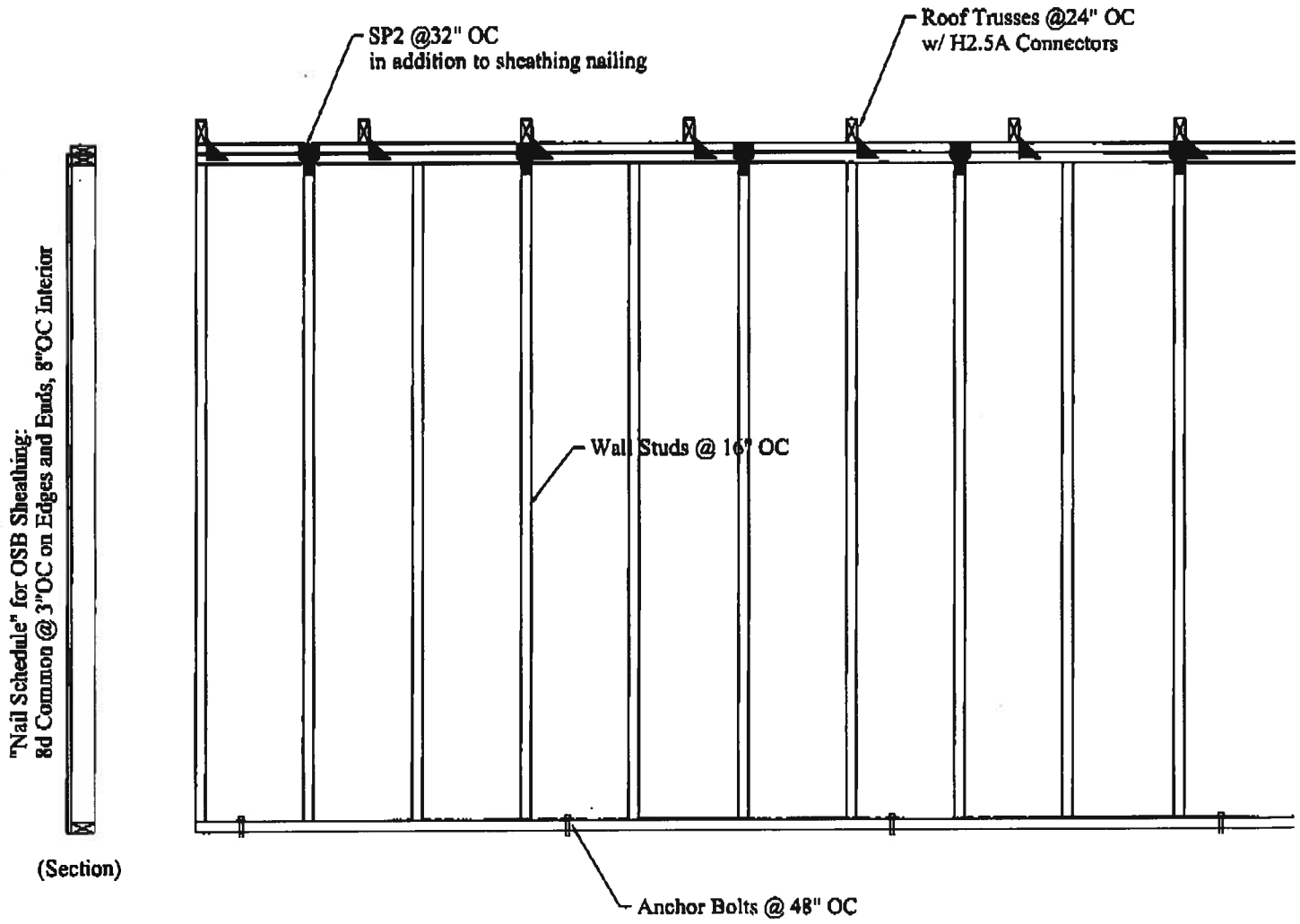

PERMIT # 26052

Frank J. Sapienza, Jr.
Licensed Professional Engineer
Florida License #48566

Hartley Brothers Construction, Inc.

107 SW 140 Terrace
Newberry, FL 32669
352.332.2112
352.332.9312 (fax)

License CB-C019922
www.hartleybrothers.com

1980 - 2006
over 26 years of building quality homes in Alachua and surrounding counties

TO
Company: COLUMBIA COUNTY BUILD. DEPT.

Attn: JOHN KERCES

Fax Number: 386-758-2160

FROM: ED VANDEGRIFT OR CELL # 352 258-5015

☑ Office	☐ *Fletcher Park*	☐ Savannah Station
352.332.2112 ext: 22	352.332.4299	386.418.0680
352.332.9312 (fax)	352.332.4509 (fax)	386.418.0689 (fax)

Date: 9/06/07

Number of pages (including cover): 2

Message: HERE IS A COPY OF THE WALL SECTION PROFILE WE TALKED ABOUT

OUR OFFICE WILL ~~#~~ MAIL THE RAISED SEAL COPY TO YOU. THANK YOU

Ed

Wind Load Analysis and Certification

Morris Residence by Hartley Bros Construction

+ Wall Detail for Uplift

Permit # 000026052

Detail Requested by:
John Kerce

9/5/07

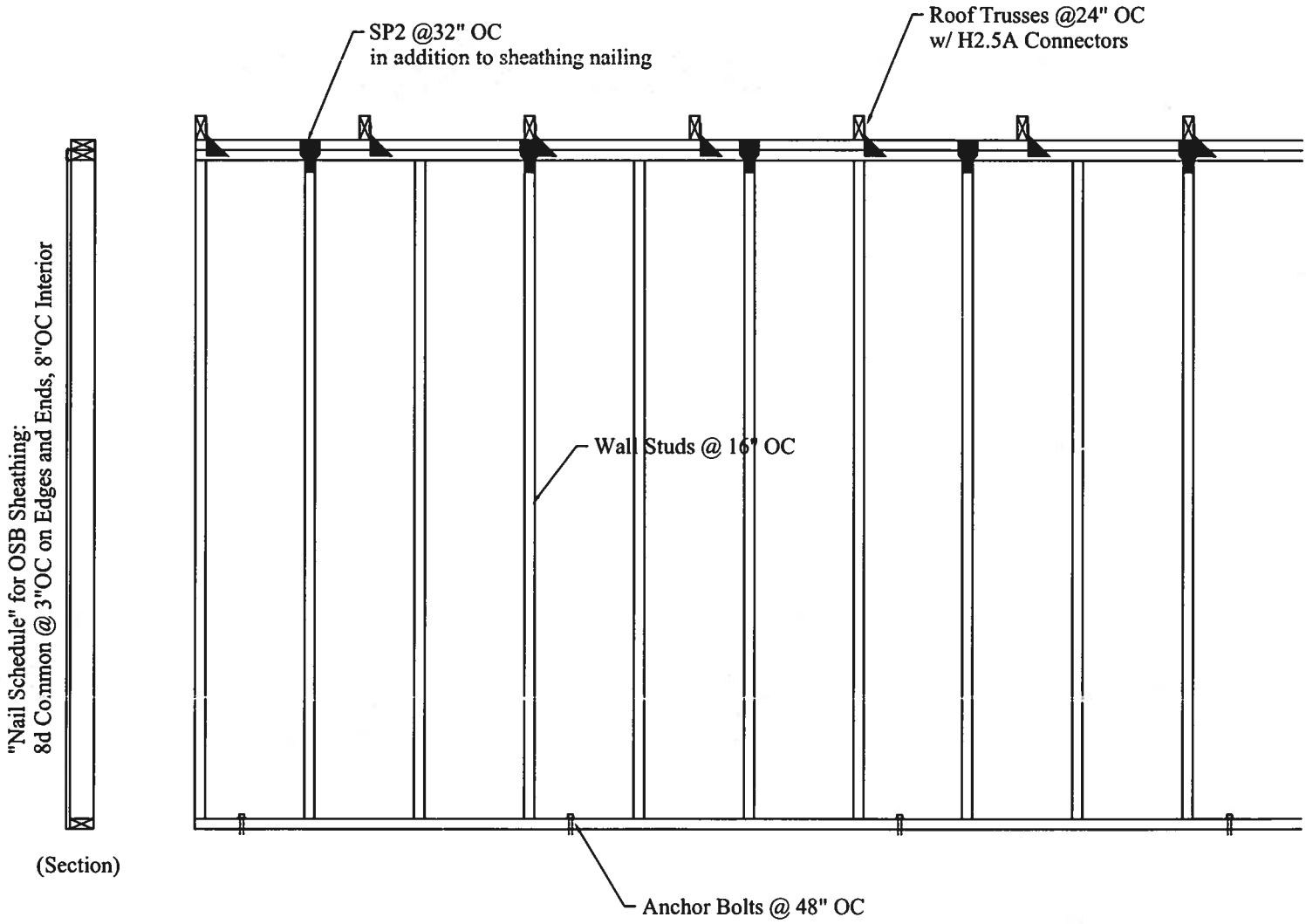

Frank J. Sapienza, Jr.
Licensed Professional Engineer
Florida License #48566

CERTIFICATE OF

OCCUPANCY

COLUMBIA COUNTY, FLORIDA

Department of Building and Zoning Inspection

This Certificate of Occupancy is issued to the below named permit holder for the building and premises at the below named location, and certifies that the work has been completed in accordance with the Columbia County Building Code.

Parcel Number 35-6S-16-04070-004 **Building permit No.** 000026052

Use Classification SFD,UTILITY **Fire:** 0.00

Permit Holder PHILLIP HARTLEY **Waste:**

Owner of Building RENE` MORRIS **Total:** 0.00

Location: 491 SW RED CEDAR COURT, FT. WHITE, FL

Date: 01/03/2008

Wayne A. Russ

Building Inspector

POST IN A CONSPICUOUS PLACE
(Business Places Only)

Wind Load Analysis and Certification

Morris Residence by Hartley Brothers Construction

2004 Florida Building Code (Residential) section 1609 according to ASCE 7-02
Basic Wind Speed = 110 MPH
Importance Factor = 1.0
Exposure Category = B
Applicable Internal Pressure Coefficient = .18
Design Wind Pressure for use of External Components = 31.1 psf
Mean Roof Height = 14.1'

6/25/07

Roof Decking

7/16" OSB, 5/8" CDX or ¾" CDX Decking; 48"x96" Sheets, Perpendicular to Roof Framing Members
8d common (.131" dia) nails at 4" O.C. on Ends, 8" O.C. in Interior or 8d (.113") ring shank nail @ 4" O.C. ends, 6" O.C. interior.
Trusses or Rafters at 2' O.C. (horizontal distance), No Intermediate Blocking Required
Rafters: 2x6 SYP #2 up to 10' horizontal span, 2x8 SYP #2 up to14' horizontal span

Shear Wall Segments

7/16" OSB, 48" Wide Sheets Placed Vertical - Sheathing Continuous from Top Plate down to Pressure Treated Sole Plate Bearing on Foundation.
8d common (.131" dia) nails at 3" O.C. on Edges and Ends, 8" O.C. in Interior
Transverse Shearwall = 51', Longitudinal Shearwall = 50'
2x4 SPF (No. 1&2) Studs at 16" O.C., up to 12' wall height
or: 2x6 SPF (No. 1&2) Studs at 16" O.C., up to 18' wall height
See attached detail for stud and jack requirements for wall openings
Nail Together Double Top Plate 6" O.C. w/12-d Common Nails (SYP top plates)
Other Wall Segments - Same as Shear Walls

Gabled End Wall Framing

Balloon Frame (see detail) or see attached alternate details.
T-Block (with 2x4's) bottom chord of porch gable trusses at 4' O.C to 6' from wall

Special Notes: No special corner framing required.

Footings and Foundations (Based on Truss Engineering)

20" deep x 14" wide monolithic with 2-#5's, Continuous
or: 20" Wide x 10" Deep 2500 psi Concrete Strip Footing with 2-#5's, Continuous
8"x8"x16" Concrete Masonry Stemwall, Minimum 2 Courses, Maximum 5 Courses, Fully Grouted, except sections over 3 courses need only cells with rebar to be grouted. 1-#5 Vertical Dowel at Corners and 8'-0" O.C. (10" hook top and bottom) (min 25" lap all #5 rebar) **(1) #5 continuous top course. All 4" slabs requires 6x6 WWM**
Interior footers: 16" wide by 10" deep (including 4" slab) with 2-#5's, Continuous,
Porch Footers: see above or: 8" wide by 8" deep bell footing with 1-#5, Continuous with minimum of 24"x24" x 12" pad under each post (w/ 2- #5 each way) or 16" deep x 12" wide monolithic with 2-#5, Cont. with no pads.
Note: footer design based on continuous bearing. Continuous footers (grade beams) for pier foundation systems must be designed by pier foundation subcontractor. Footers for any concentrated loads greater than 10,000 lbs must be reviewed with windload engineer.

Hurricane-Resistance Hardware (Based on Truss Engineering)

Truss Clips/Headers/Girders/Posts/Beams /Top and Bottom of Wall Unit - See Table
Anchor Bolts- A-307 (1/2"Dia. x 8" with min 6" embedment) at 48"O.C. (First bolt at 9" from Corner, then 48" O.C.) and at each end of Each Shearwall Segment (2" round or square washers).

I hereby certify that the accompanying Wind Load Analysis for the **Morris Residence**, demonstrates compliance with the 2004 FBC section 1609 according to ASCE 7-02, to the best of my knowledge.

Frank J. Sapienza Jr.
License Professional Engineer
Florida License Number 48566

HOLD-DOWN TABLE **Morris Residence** **6/25/2007**

Wood Sections	**Uplift Force** Lbs	**Top Connector** Simpson **	**Rating** Lbs	**Bottom Connector** Simpson **	**Rating** Lbs
HEADERS					
	up to 455 lbs	LSTA9	775	H3	455
	up to 910 lbs	LSTA12	970	2-H3	910
	up to 1235 lbs	LSTA18	1235	LTT19	1350
	up to 1750 lbs	2-LSTA12	1940	LTT20	1750
	up to 2470 lbs	2-LSTA18	2470	HD2A-2.5	2565
	up to 2775 lbs	3-LSTA18	3705	HD2A-3.5	2775
	up to 3705 lbs	3-LSTA18	3705	HD5A-3	3705

To determine uplift force on header at each end, total the uplifts for each truss resting on the header and divide by 2 (assumes uniform load) Note: must use proper bolt anchors sufficient to support required load

Trusses/Girders -

up to 600 lbs - use H2.5A top, no special device required at bottom
over 600 lbs but under 990 lbs use H10 top, no special device required at bottom
up to 1215 lbs use TS22 or equivalent at top and LTT19 at bottom
up to 1750 lbs use 2-TS22 or equivalent at top and LTT20 at bottom
up to 2430 lbs use 2-TS22 or equivalent at top and HD2A bottom
up to 3645 lbs use 3-TS22 or equivalent at top and HD5A bottom
Must Use proper bolt anchors

Note: it is the contractors responsibility to provide a continuous load path from truss/rafter/ridge beam to foundation

Strap rafters to truss or at each end with min uplift resistance of 450 lbs each end
Strap ridge beam at each end with min uplift resistance of 1800 lbs

Note: Four (4) 12d comm toenails (2 on each side) required per truss/rafter per bearing point into plate to resist both lateral loads (wall to truss) and transverse loads (max plate height =12', not including gable)

Horizontal Resistance (from truss loads) - Note: these devices are in addition to required toe-nails

up to 110 lbs - use H2.5A
up to 525 lbs use H10
up to 1090 lbs use H10 plus A23

Note: hardware to be used must satisfy both uplift and horizontal resistance, combination of devices is acceptable

Note: for combination of loads (uplift and horizontal/lateral) on a single device, the ratio of actual uplift/allowable uplift + actual horizontal load/allowable horizontal cannot exceed 1

	top		bottom	
BEAM SEATS	LSTA18*	1235	LTT19*	1350
POSTS (max post spacing = 16')	2-LSTA18	2470	ABU44	2200

*** or per truss engineering** Must Use proper bolt anchors

STUDS

Wall Sheathing Nailing Adequate Exterior Walls bottom (8d nails at 3"O.C.)
Wall Sheathing Nailing Adequate Exterior Walls Top (8d nails at 3"O.C.), as long as sheathing covers top plate, otherwise use SP2 @32" O.C. in addition to sheathing nailing,
Use SP2 top and SP1 bottom each stud an ancor bolts @ 32" O.C. for all interior load bearing walls that have uplift. Interior anchor bolts to be 1/2" x 8" A307 or 1/2" x 6" wedge anchor or equiv.

Please Note: All Beams must be sheathed or strapped to Double Top Plate (if applicable)

**an equivalent device of same or other manufactures can be substituted for any of the devices specified on this page as long as it meets the required load capacities

Note: For nailing into SPF members, multiply table values by .86

6/25/07

Acceptable Framing Method for Balloon Framed Gable End–Wall with trusses

Balloon Frame with 2x4 SPF No.1&2 @ 16" O.C. with the Following Conditions:
Up to 12' – Block at 8'
Over 12' but Under 14' – 2x4 SYP #2 at 16" O.C. and Block at 4',8'&12'
Over 14' but Under 17' – Double 2x4 SYP #2 at 16" O.C. and block at 4',8',12'&16'
Over 17' but Under 20' – Triple 2x4 SYP #2 at 16" O.C. and block at 4',8',12'&16'
Over 20' but Under 23' – Quadruple 2x4 SYP #2 at 16" O.C.and block at 4',8',12',16'&20'
Over 23' – Must be Engineered

In all cases a minimum of a double full length stud is required at each side of openings such as doors and windows

Blocking must be parallel to top and bottom plates with a minimum of 2–12d comm nails

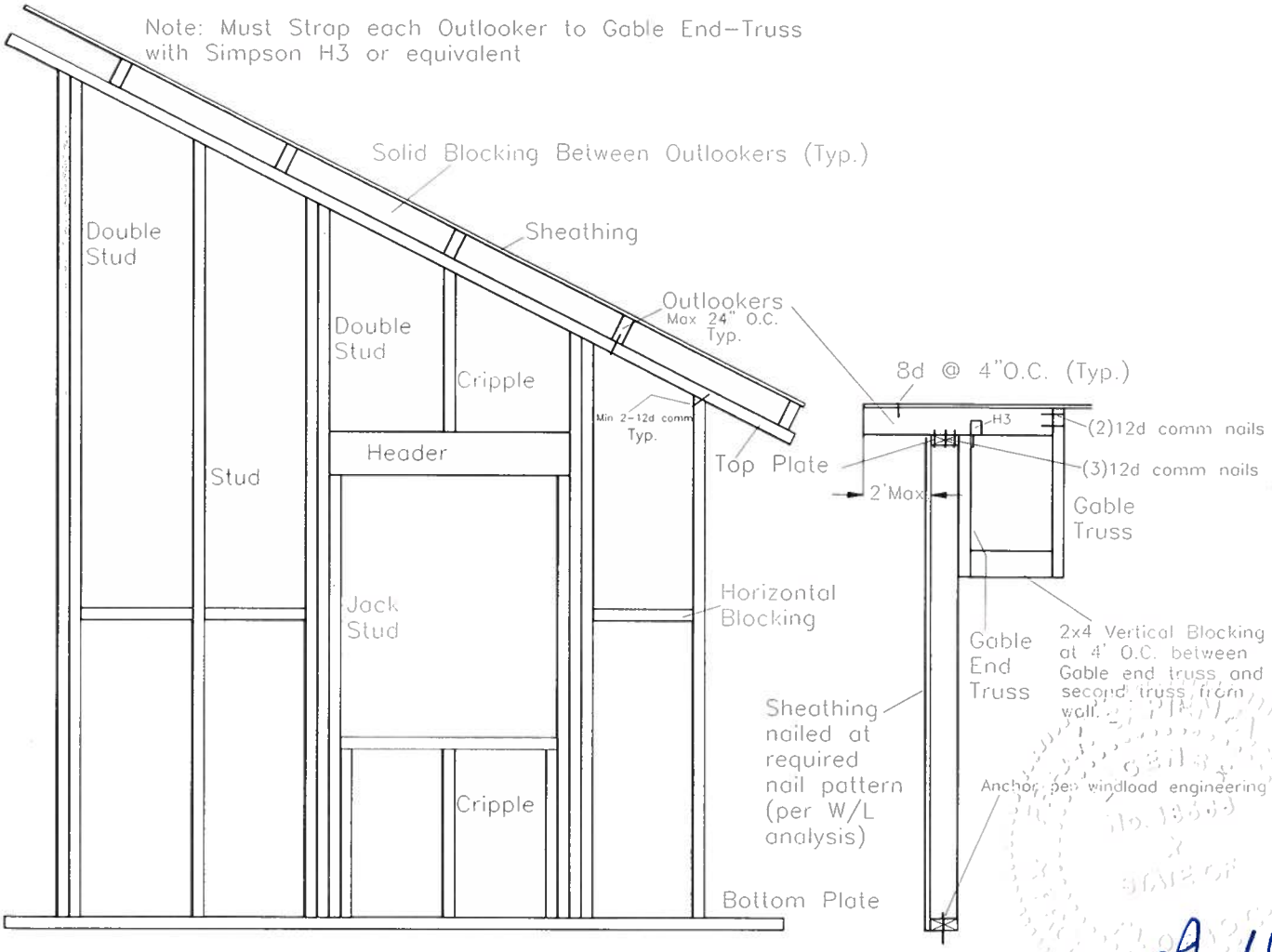

F. Sapienza, P.E. 6/07

6/25/07

Gable Endwall Framing
with Gable End–Truss

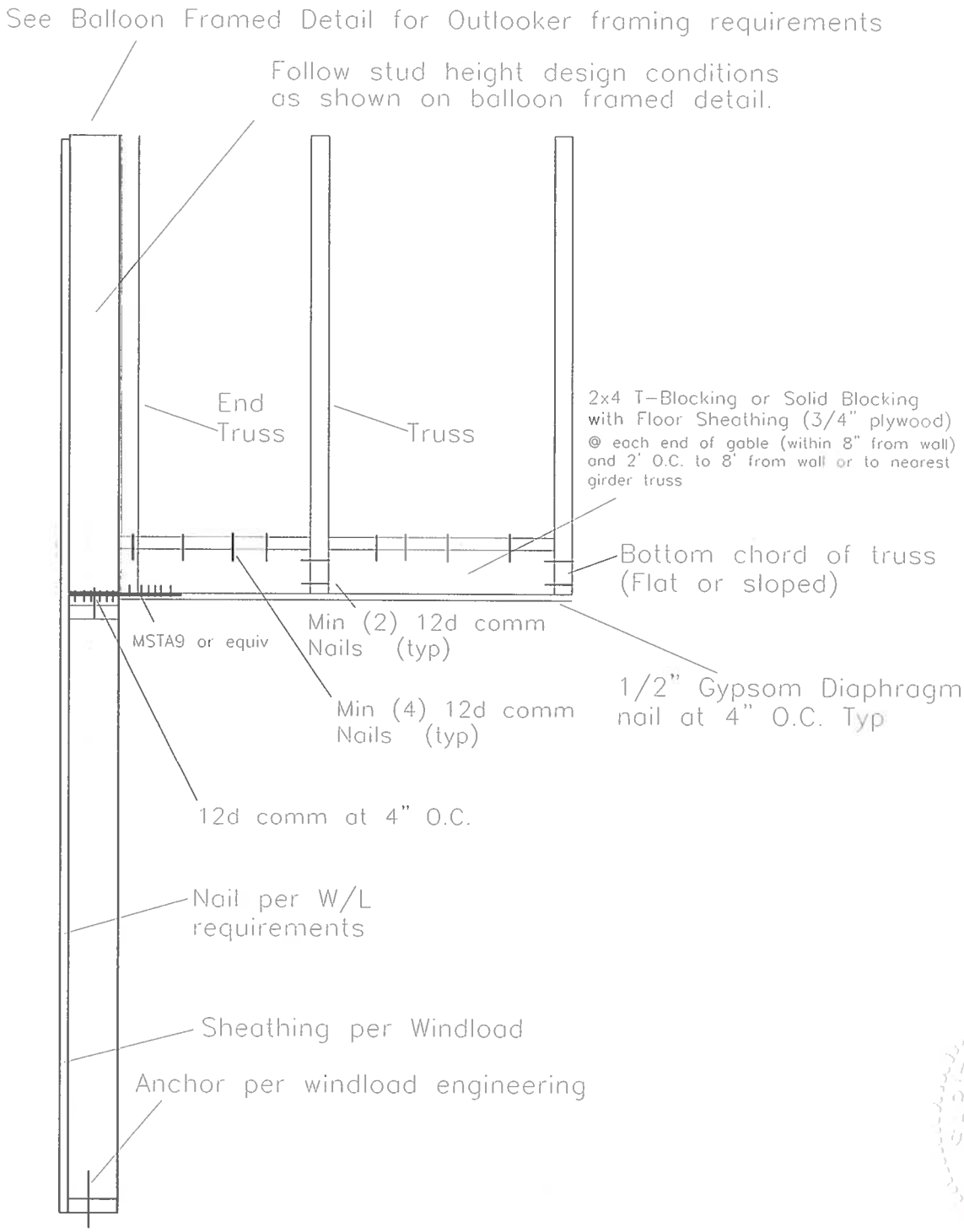

6/25/07

Gable Endwall Framing
with Gable End-Truss

See Balloon Framed Detail for Outlooker framing requirements

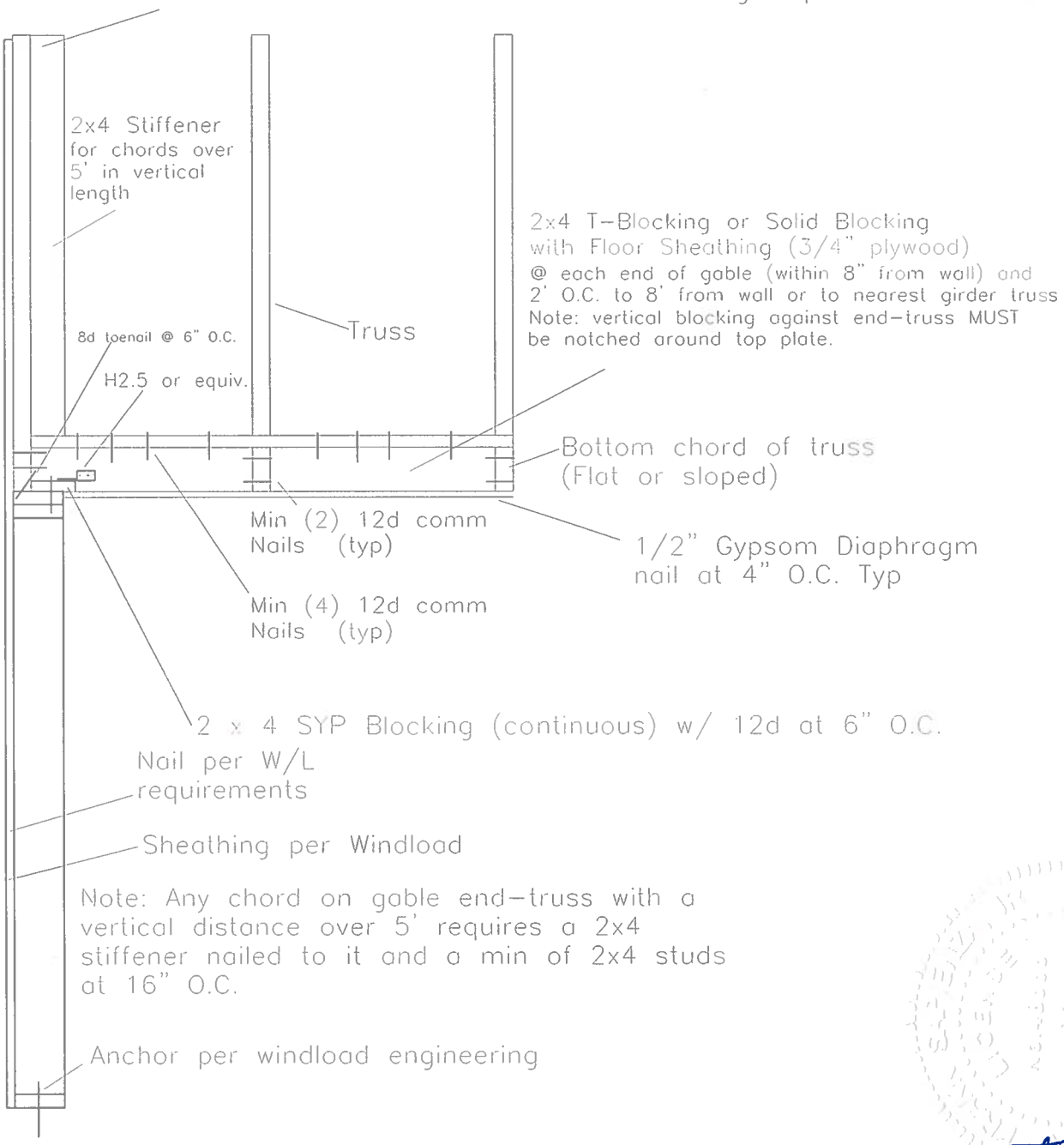

Note: Any chord on gable end-truss with a vertical distance over 5' requires a 2x4 stiffener nailed to it and a min of 2x4 studs at 16" O.C.

6/25/07

Number of Jack and Stud Requirements per Opening Width
2x4 or 2x6 SPF #1&2 Construction – max Wall Height=12'
(based on 16" O.C. Stud Spacing)

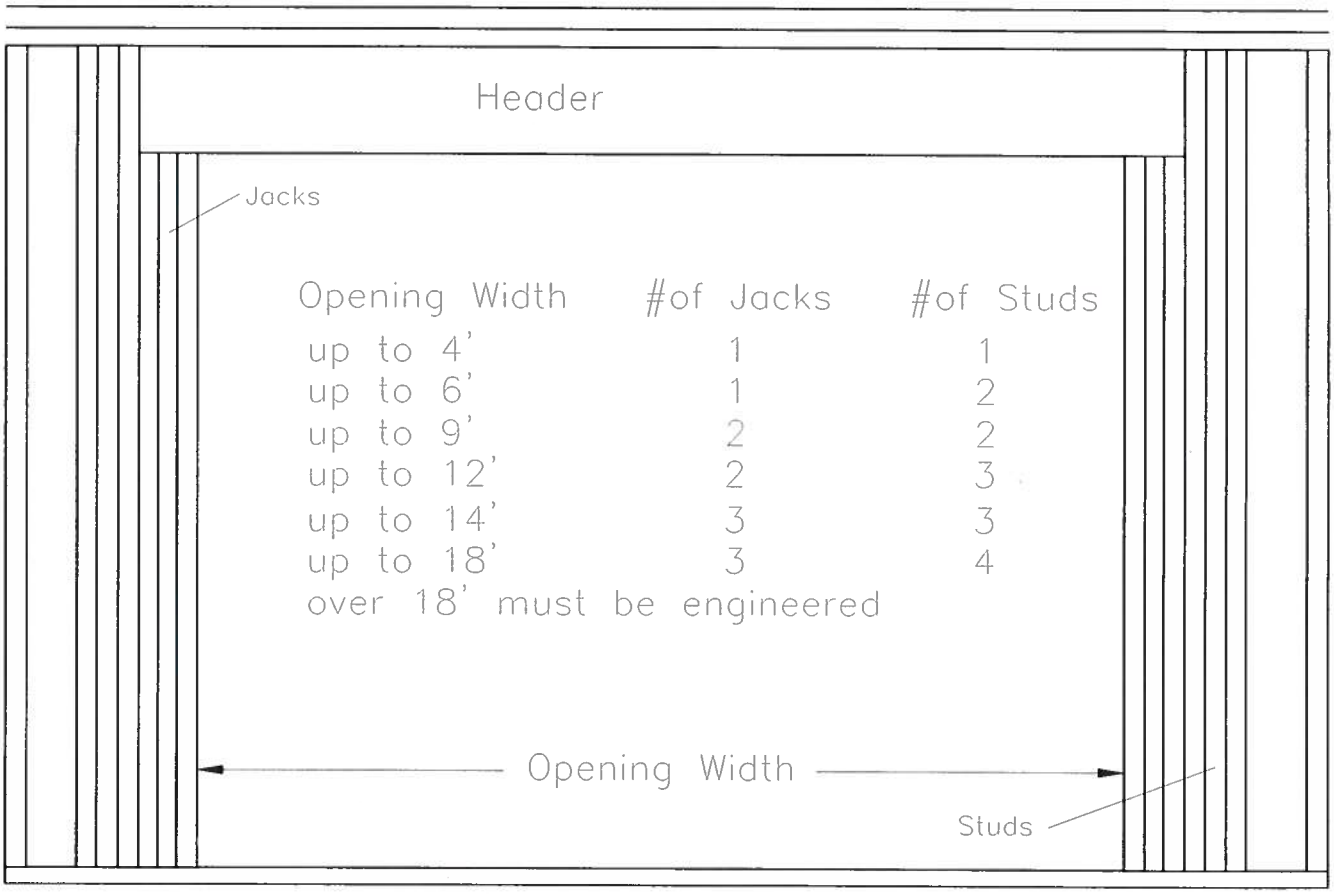

Opening Width	#of Jacks	#of Studs
up to 4'	1	1
up to 6'	1	2
up to 9'	2	2
up to 12'	2	3
up to 14'	3	3
up to 18'	3	4

over 18' must be engineered

Note – Based on uniform loads. Heavy concentrated loads require engineering review

6/25/07

Project Name: Morris Residence

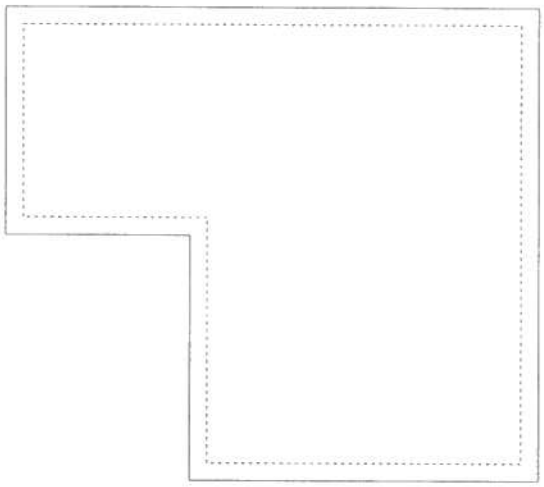

Location:

By: F Sapienza

Start Date: 6/25/2007

Comments:

Local Information

Wind Dir.	Exposure
1	B
2	B
3	B
4	B

Basic Wind Speed: 110 mph

Topography: None

Optional Factors

This project uses load combinations from ASCE 7.

 Copyright © 2000 SDG, Inc.

Section - Main Section

Enclosure Classification: Enclosed
Building Category: II

Wall	Length(ft)	Overhang(ft)
1	50.0	2.0
2	36.0	2.0
3	50.0	2.0
4	36.0	2.0

Eave Height: 8 ft
Parapet Height: 0 ft
Parapet Enclosure: Solid

Roof Shape: Hipped

Roof	Slope(:12)
A&B	7.0
C&D	7.0

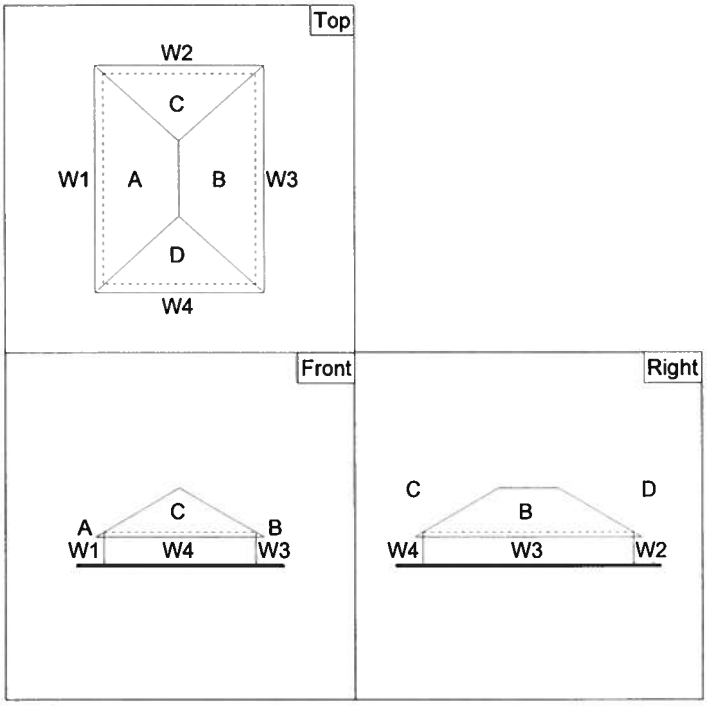

Section - Leg

Enclosure Classification: Enclosed
Building Category: II

Connected to: Main Section
Connected to wall: W1
Position on W1: 0 ft

Wall	Length(ft)	Overhang(ft)
1	22.0	2.0
2	21.0	2.0
3	22.0	0.0
4	21.0	2.0

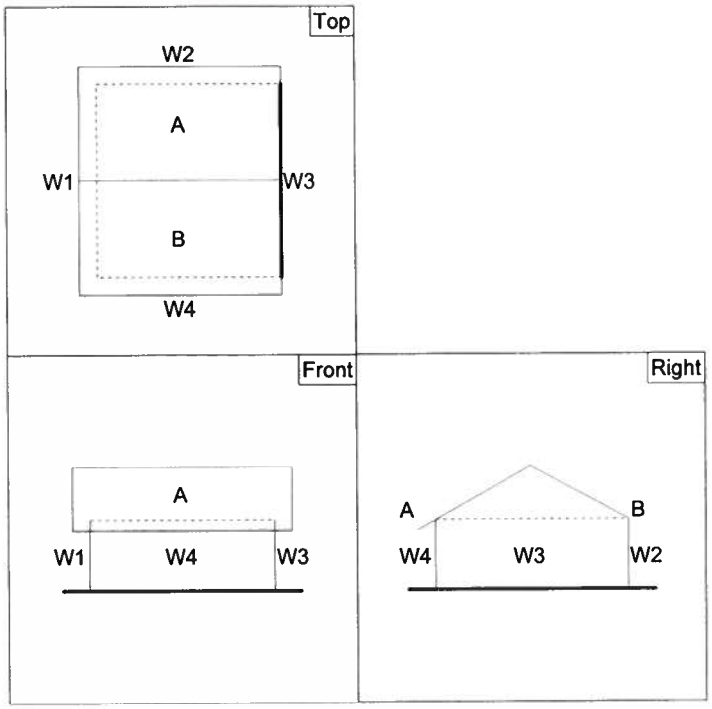

Eave Height: 8 ft
Parapet Height: 0 ft
Parapet Enclosure: Solid

Roof Shape: Gabled

Roof	Slope(:12)
A&B	7.0

Composite Drawing

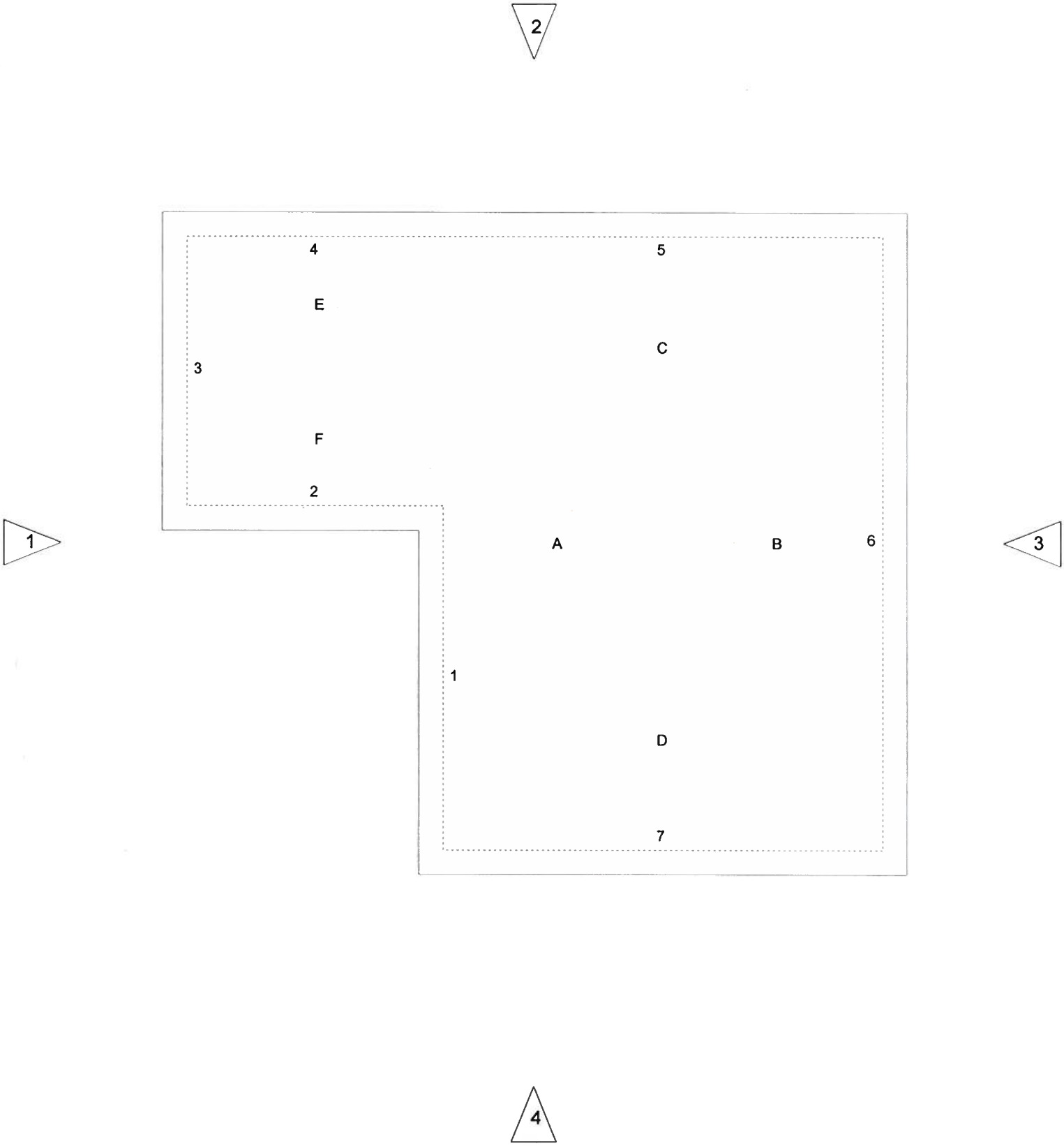

ASCE7-02

MWFRS Net Pressures

This data was calculated using the building of all heights method.

Wind Direction 1

#	Surface	z (ft)	q (psf)	G	Cp	GCpi	Ext Pres (psf)	Net w/ +GCpi (psf)	Net w/ -GCpi (psf)
1	Windward Wall	0.0	15.1	0.87	0.80	0.18	10.5	7.8	13.2
		8.0	15.1				10.5	7.8	13.2
	Overhang Top	13.3	15.1		0.31	0	4.1		
		13.3	15.1		-0.19		-2.5		
	Overhang Bot	8.0	15.1		0.80		10.5		
2	Side Wall	13.3	15.1	0.87	-0.70	0.18	-9.2	-11.9	-6.5
3	Windward Wall	0.0	15.1	0.87	0.80	0.18	10.5	7.8	13.2
		14.4	15.1				10.5	7.8	13.2
	Overhang Top	13.3	15.1		-0.90	0	-11.8		
	Overhang Bot	13.3	15.1		0.80		10.5		
4	Side Wall	13.3	15.1	0.87	-0.70	0.18	-9.2	-11.9	-6.5
5	Side Wall	13.3	15.1	0.87	-0.70	0.18	-9.2	-11.9	-6.5
6	Leeward Wall	13.3	15.1	0.87	-0.47	0.18	-6.2	-8.9	-3.5
7	Side Wall	13.3	15.1	0.87	-0.70	0.18	-9.2	-11.9	-6.5
A	Windward Roof	13.3	15.1	0.87	0.26	0.18	3.4	0.7	6.1
		13.3	15.1		-0.19		-2.5	-5.2	0.2
B	Leeward Roof	13.3	15.1	0.87	-0.60	0.18	-7.9	-10.6	-5.2
C&D	Roof	0 to 6.6 *	15.1	0.87	-0.90	0.18	-11.8	-14.5	-9.1
		6.6 to 13.3 *	15.1				-11.8	-14.5	-9.1
		13.3 to 26.5 *	15.1		-0.50		-6.6	-9.3	-3.9
		26.5 to 36.0 *	15.1		-0.30		-3.9	-6.7	-1.2
		0 to 36.0 *	15.1		-0.18		-2.4	-5.1	0.4
E&F	Roof	0 to 6.6 *	15.1	0.87	-0.98	0.18	-12.9	-15.6	-10.2
		6.6 to 13.3 *	15.1		-0.85		-11.2	-13.9	-8.4
		13.3 to 21.0 *	15.1		-0.55		-7.2	-9.9	-4.5

 Copyright © 2000 SDG, Inc.

ASCE7-02

MWFRS Net Pressures

This data was calculated using the building of all heights method.

Wind Direction 1

#	Surface	z (ft)	q (psf)	G	Cp	GCpi	Ext Pres (psf)	Net w/ +GCpi (psf)	Net w/ -GCpi (psf)
E&F	Roof	0 to 21.0 *	15.1	0.87	-0.18	0.18	-2.4	-5.1	0.4

This is load case 1 in ASCE 7-02 Figure 6-9. See Figure 6-9 for other cases.

* Distance from windward edge.

 Copyright © 2000 SDG, Inc.

ASCE7-02

MWFRS Net Pressures

This data was calculated using the building of all heights method.

Wind Direction 2

#	Surface	z (ft)	q (psf)	G	Cp	GCpi	Ext Pres (psf)	Net w/ +GCpi (psf)	Net w/ -GCpi (psf)
1	Side Wall	13.3	15.1	0.86	-0.70	0.18	-9.1	-11.8	-6.4
2	Leeward Wall	13.3	15.1		-0.50		-6.5	-9.2	-3.8
3	Side Wall	13.3	15.1	0.86	-0.70	0.18	-9.1	-11.8	-6.4
4	Windward Wall	0.0	15.1	0.86	0.80	0.18	10.4	7.7	13.1
		8.0	15.1				10.4	7.7	13.1
	Overhang Top	13.3	15.1		0.30	0	3.9		
		13.3	15.1		-0.19		-2.5		
	Overhang Bot	8.0	15.1		0.80		10.4		
5	Windward Wall	0.0	15.1	0.86		0.18	10.4	7.7	13.1
		15.0	15.1				10.4	7.7	13.1
		18.5	16.1				11.1	8.4	13.8
	Overhang Top	13.3	15.1		0.30	0	3.9		
		13.3	15.1		-0.19		-2.5		
	Overhang Bot	8.0	15.1		0.80		10.4		
6	Side Wall	13.3	15.1	0.86	-0.70	0.18	-9.1	-11.8	-6.4
7	Leeward Wall	13.3	15.1	0.86	-0.50	0.18	-6.5	-9.2	-3.8
A&B	Roof	0 to 6.6 *	15.1	0.86	-0.90	0.18	-11.7	-14.4	-9.0
		6.6 to 13.3 *	15.1				-11.7	-14.4	-9.0
		13.3 to 26.5 *	15.1		-0.50		-6.5	-9.2	-3.8
		26.5 to 50.0 *	15.1		-0.30		-3.9	-6.6	-1.2
		0 to 50.0 *	15.1		-0.18		-2.3	-5.1	0.4
C	Windward Roof	13.3	15.1	0.86	0.30	0.18	3.9	1.2	6.6
		13.3	15.1		-0.19		-2.5	-5.2	0.3
D	Leeward Roof	13.3	15.1	0.86	-0.60	0.18	-7.8	-10.5	-5.1
E	Windward Roof	13.3	15.1	0.86	0.20	0.18	2.6	-0.1	5.3

ASCE7-02

MWFRS Net Pressures

This data was calculated using the building of all heights method.

Wind Direction 2

#	Surface	z (ft)	q (psf)	G	Cp	GCpi	Ext Pres (psf)	Net w/ +GCpi (psf)	Net w/ -GCpi (psf)
		13.3	15.1		-0.22		-2.9	-5.6	-0.1
F	Leeward Roof	13.3	15.1	0.86	-0.60	0.18	-7.8	-10.5	-5.1

This is load case 1 in ASCE 7-02 Figure 6-9. See Figure 6-9 for other cases.

* Distance from windward edge.

ASCE7-02

MWFRS Net Pressures

This data was calculated using the building of all heights method.

Wind Direction 3

#	Surface	z (ft)	q (psf)	G	Cp	GCpi	Ext Pres (psf)	Net w/ +GCpi (psf)	Net w/ -GCpi (psf)
1	Leeward Wall	13.3	15.1	0.87	-0.47	0.18	-6.2	-8.9	-3.5
2	Side Wall	13.3	15.1		-0.70		-9.2	-11.9	-6.5
3	Leeward Wall	13.3	15.1	0.87	-0.47	0.18	-6.2	-8.9	-3.5
4	Side Wall	13.3	15.1	0.87	-0.70	0.18	-9.2	-11.9	-6.5
5	Side Wall	13.3	15.1	0.87	-0.70	0.18	-9.2	-11.9	-6.5
6	Windward Wall	0.0	15.1	0.87	0.80	0.18	10.5	7.8	13.2
		8.0	15.1				10.5	7.8	13.2
	Overhang Top	13.3	15.1		0.31	0	4.1		
		13.3	15.1		-0.19		-2.5		
	Overhang Bot	8.0	15.1		0.80		10.5		
7	Side Wall	13.3	15.1	0.87	-0.70	0.18	-9.2	-11.9	-6.5
A	Leeward Roof	13.3	15.1	0.87	-0.60	0.18	-7.9	-10.6	-5.2
B	Windward Roof	13.3	15.1	0.87	0.26	0.18	3.4	0.7	6.1
		13.3	15.1		-0.19		-2.5	-5.2	0.2
C&D	Roof	0 to 6.6 *	15.1	0.87	-0.90	0.18	-11.8	-14.5	-9.1
		6.6 to 13.3 *	15.1				-11.8	-14.5	-9.1
		13.3 to 26.5 *	15.1		-0.50		-6.6	-9.3	-3.9
		26.5 to 36.0 *	15.1		-0.30		-3.9	-6.7	-1.2
		0 to 36.0 *	15.1		-0.18		-2.4	-5.1	0.4
E&F	Roof	0 to 6.6 *	15.1	0.87	-0.98	0.18	-12.9	-15.6	-10.2
		6.6 to 13.3 *	15.1		-0.85		-11.2	-13.9	-8.4
		13.3 to 21.0 *	15.1		-0.55		-7.2	-9.9	-4.5
		0 to 21.0 *	15.1		-0.18		-2.4	-5.1	0.4

This is load case 1 in ASCE 7-02 Figure 6-9. See Figure 6-9 for other cases.

ASCE7-02

MWFRS Net Pressures

This data was calculated using the building of all heights method.

Wind Direction 3

#	Surface	z (ft)	q (psf)	G	Cp	GCpi	Ext Pres (psf)	Net w/ +GCpi (psf)	Net w/ -GCpi (psf)

* Distance from windward edge.

ASCE7-02

MWFRS Net Pressures

This data was calculated using the building of all heights method.

Wind Direction 4

#	Surface	z (ft)	q (psf)	G	Cp	GCpi	Ext Pres (psf)	Net w/ +GCpi (psf)	Net w/ -GCpi (psf)
1	Side Wall	13.3	15.1	0.86	-0.70	0.18	-9.1	-11.8	-6.4
2	Windward Wall	0.0	15.1		0.80		10.4	7.7	13.1
		8.0	15.1				10.4	7.7	13.1
	Overhang Top	13.3	15.1		0.30	0	3.9		
		13.3	15.1		-0.19		-2.5		
	Overhang Bot	8.0	15.1		0.80		10.4		
3	Side Wall	13.3	15.1	0.86	-0.70	0.18	-9.1	-11.8	-6.4
4	Leeward Wall	13.3	15.1	0.86	-0.50	0.18	-6.5	-9.2	-3.8
5	Leeward Wall	13.3	15.1	0.86	-0.50	0.18	-6.5	-9.2	-3.8
6	Side Wall	13.3	15.1	0.86	-0.70	0.18	-9.1	-11.8	-6.4
7	Windward Wall	0.0	15.1	0.86	0.80	0.18	10.4	7.7	13.1
		15.0	15.1				10.4	7.7	13.1
		18.5	16.1				11.1	8.4	13.8
	Overhang Top	13.3	15.1		0.30	0	3.9		
		13.3	15.1		-0.19		-2.5		
	Overhang Bot	8.0	15.1		0.80		10.4		
A	Leeward Roof	13.3	15.1	0.86	-0.60	0.18	-7.8	-10.5	-5.1
B	Windward Roof	13.3	15.1	0.86	0.30	0.18	3.9	1.2	6.6
		13.3	15.1		-0.19		-2.5	-5.2	0.3
C&D	Roof	0 to 6.6 *	15.1	0.86	-0.90	0.18	-11.7	-14.4	-9.0
		6.6 to 13.3 *	15.1				-11.7	-14.4	-9.0
		13.3 to 26.5 *	15.1		-0.50		-6.5	-9.2	-3.8
		26.5 to 50.0 *	15.1		-0.30		-3.9	-6.6	-1.2
		0 to 50.0 *	15.1		-0.18		-2.3	-5.1	0.4
E	Leeward Roof	13.3	15.1	0.86	-0.60	0.18	-7.8	-10.5	-5.1

 Copyright © 2000 SDG, Inc.

ASCE7-02

MWFRS Net Pressures

This data was calculated using the building of all heights method.

Wind Direction 4

#	Surface	z (ft)	q (psf)	G	Cp	GCpi	Ext Pres (psf)	Net w/ +GCpi (psf)	Net w/ -GCpi (psf)
F	Windward Roof	13.3	15.1	0.86	0.20	0.18	2.6	-0.1	5.3
		13.3	15.1		-0.22		-2.9	-5.6	-0.1

This is load case 1 in ASCE 7-02 Figure 6-9. See Figure 6-9 for other cases.

* Distance from windward edge.

 Copyright © 2000 SDG, Inc.

0707-12

Phil Hartley
Hartley Brothers Construction
Re: Morris Residence

Mr. Hartley,

Regarding the Morris residence, for the garage door header, an Anthony 3.5" x 14" Garage Header shall be used. The actual equivalent uniform load on the header is 494 lbs/ft and the allowable load is 897 lbs/ft therefore it is acceptable. The header shall be strapped at the top with a min of two (2) Simpson LSTA18 (or equivalent) and at the bottom with Simpson LTT20 (or equivalent).

If you have any questions regarding this matter please feel free to contact me.

Sincerely,

Frank J. Sapienza Jr.
License Professional Engineer
Florida License Number 48566

7/11/07

ATTN: JOE HALTIWANGER

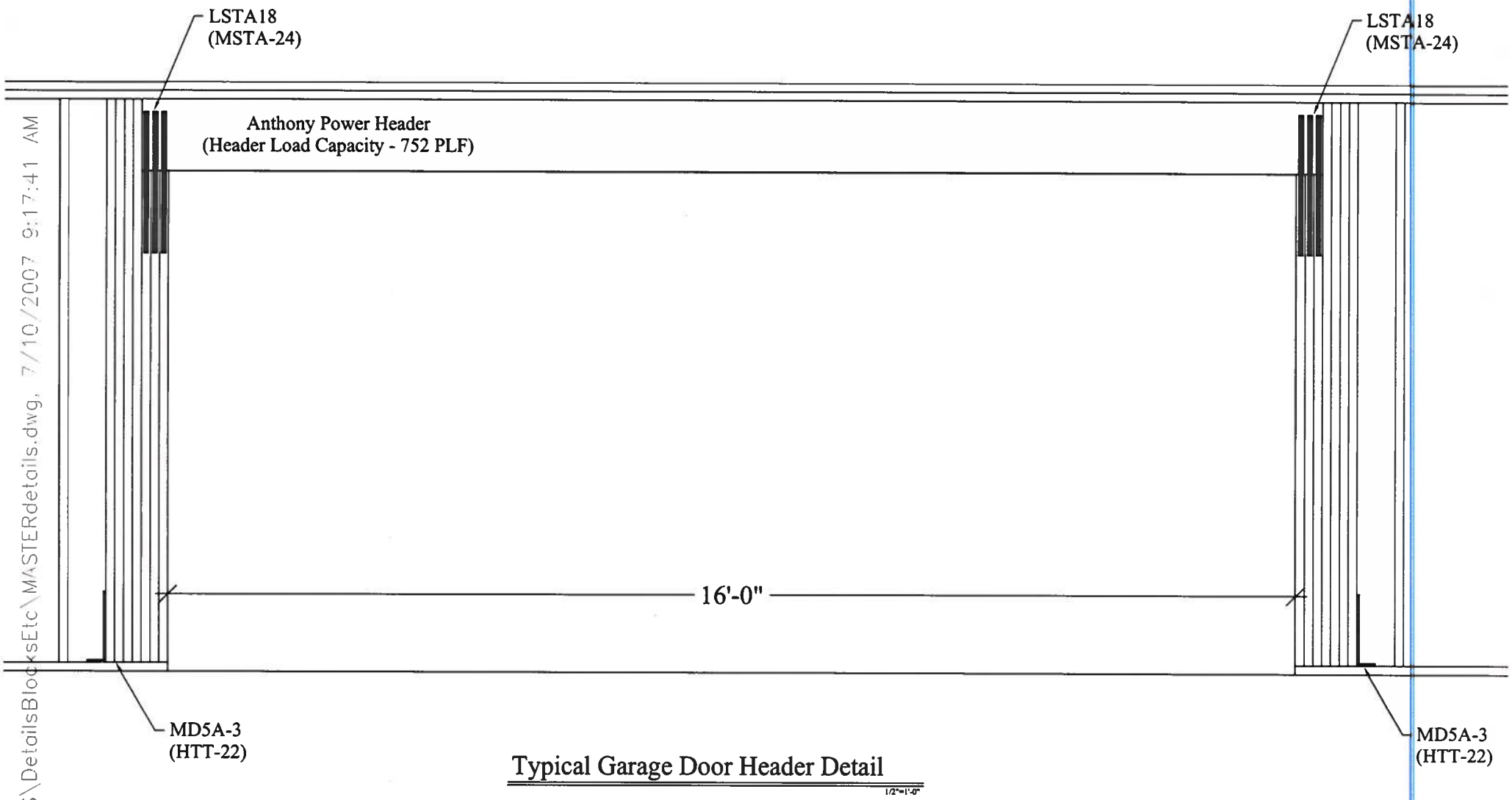

Typical Garage Door Header Detail

1/2"=1'-0"

C:\HartleyDWGS\DetailsBlocksEtc\MASTERdetails.dwg, 7/10/2007 9:17:41 AM

Phil Hartley
Hartley Brothers Construction
Re: Morris Residence

Mr. Hartley,

Regarding the Morris residence, for the garage door header, an Anthony 3.5" x 14" Garage Header shall be used. The actual equivalent uniform load on the header is 494 lbs/ft and the allowable load is 897 lbs/ft therefore it is acceptable. The header shall be strapped at the top with a min of two (2) Simpson LSTA18 (or equivalent) and at the bottom with Simpson LTT20 (or equivalent).

If you have any questions regarding this matter please feel free to contact me.

Sincerely,

Frank J. Sapienza Jr.
License Professional Engineer
Florida License Number 48566

7/11/07

ATTN: JOE HALTIWANGER

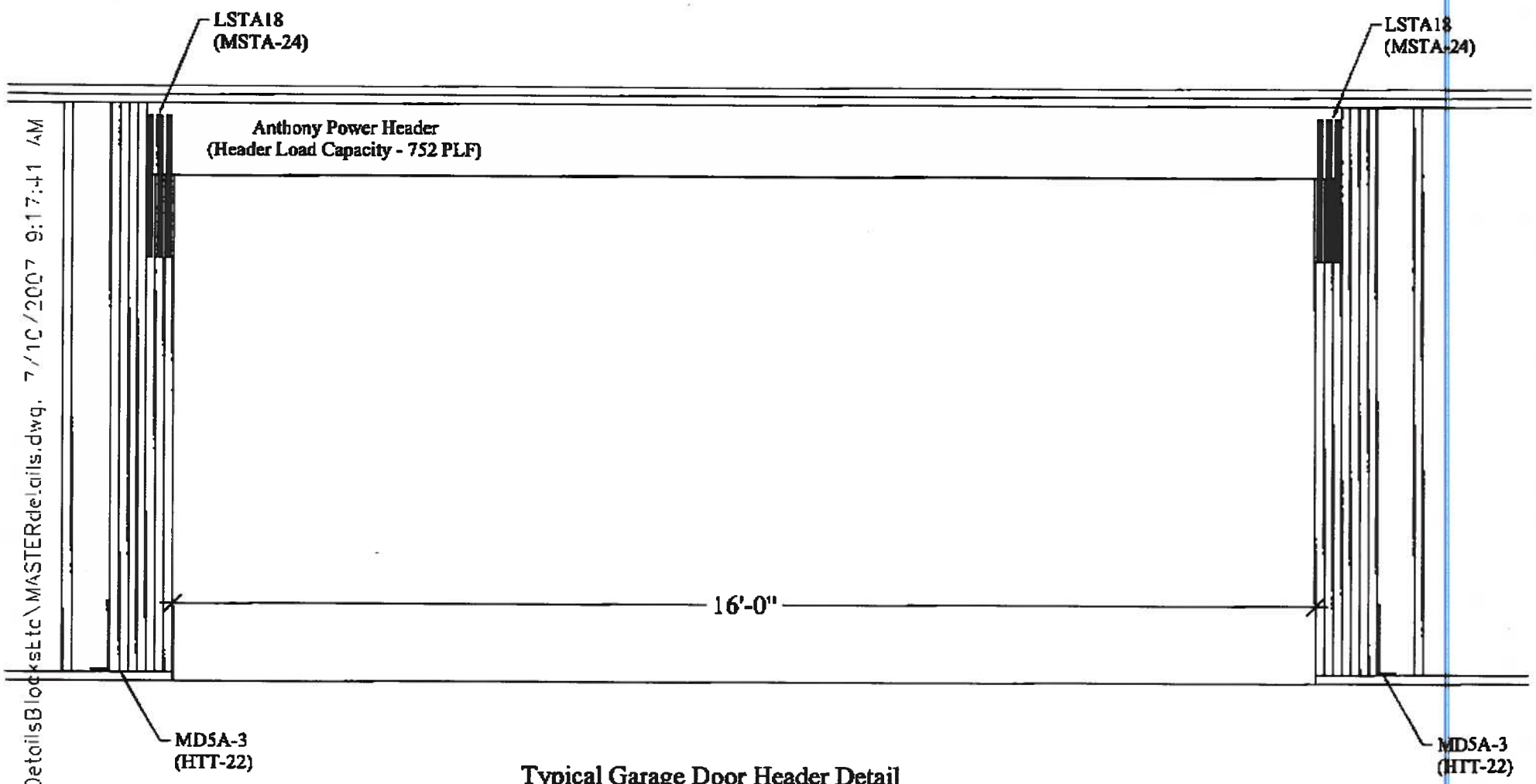

Typical Garage Door Header Detail

COLUMBIA COUNTY BUILDING DEPARTMENT

RESIDENTIAL MINIMUM PLAN REQUIREMENTS AND CHECKLIST FOR FLORIDA BUILDING CODE 2001 ONE (1) AND TWO (2) FAMILY DWELLINGS

ALL REQUIREMENTS ARE SUBJECT TO CHANGE
EFFECTIVE MARCH 1, 2002

ALL BUILDING PLANS MUST INDICATE THE FOLLOWING ITEMS AND INDICATE COMPLIANCE WITH CHAPTER 1606 OF THE FLORIDA BUILDING CODE 2001 BY PROVIDING CALCULATIONS AND DETAILS THAT HAVE THE SEAL AND SIGNATURE OF A CERTIFIED ARCHITECT OR ENGINEER REGISTERED IN THE STATE OF FLORIDA, OR ALTERNATE METHODOLOGIES, APPROVED BY THE STATE OF FLORIDA BUILDING COMMISSION FOR ONE-AND-TWO FAMILY DWELLINGS. FOR DESIGN PURPOSES THE FOLLOWING BASIC WIND SPEED AS PER FIGURE 1606 SHALL BE USED.

WIND SPEED LINE SHALL BE DEFINED AS FOLLOWS: THE CENTERLINE OF INTERSTATE 75.

1. ALL BUILDINGS CONSTRUCTED EAST OF SAID LINE SHALL BE -------- 100 MPH
2. ALL BUILDINGS CONSTRUCTED WEST OF SAID LINE SHALL BE --------110 MPH
3. NO AREA IN COLUMBIA COUNTY IS IN A WIND BORNE DEBRIS REGION

APPLICANT – PLEASE CHECK ALL APPLICABLE BOXES BEFORE SUBMITTAL

GENERAL REQUIREMENTS: Two (2) complete sets of plans containing the following:

Applicant	Plans Examiner	
☑	☐	All drawings must be clear, concise and drawn to scale ("Optional " details that are not used shall be marked void or crossed off). Square footage of different areas shall be shown on plans.
☑	☐	Designers name and signature on document (FBC 104.2.1). If licensed architect or engineer, official seal shall be affixed.
☑	☐	**Site Plan including:** a) Dimensions of lot b) Dimensions of building set backs c) Location of all other buildings on lot, well and septic tank if applicable, and all utility easements. d) Provide a full legal description of property.
☑	☐	**Wind-load Engineering Summary, calculations and any details required** a) Plans or specifications must state compliance with FBC Section 1606 b) The following information must be shown as per section 1606.1.7 FBC a. Basic wind speed (MPH) b. Wind importance factor (I) and building category c. Wind exposure – if more than one wind exposure is used, the wind exposure and applicable wind direction shall be indicated d. The applicable internal pressure coefficient e. Components and Cladding. The design wind pressure in terms of psf (kN/m²), to be used for the design of exterior component and cladding materials not specifically designed by the registered design professional
☑	☐	**Elevations including:**
☑	☐	a) All sides
☑	☐	b) Roof pitch
☑	☐	c) Overhang dimensions and detail with attic ventilation
☑	☐	d) Location, size and height above roof of chimneys
☐ N/A	☐	e) Location and size of skylights
☑	☐	f) Building height
☑	☐	e) Number of stories

Floor Plan including:

☑ ☐ a) Rooms labeled and dimensioned

☑ ☐ b) Shear walls

☑ ☐ c) Windows and doors (including garage doors) showing size, mfg., approval listing and attachment specs. (FBC 1707) and safety glazing where needed (egress windows in bedrooms to be shown)

☑ ☐ d) Fireplaces (gas appliance) (vented or non-vented) or wood burning with hearth

☐ N/A ☐ e) Stairs with dimensions (width, tread and riser) and details of guardrails and handrails

☑ ☐ f) Must show and identify accessibility requirements (accessible bathroom)

Foundation Plan including:

☑ ☐ a) Location of all load-bearing wall with required footings indicated as standard Or monolithic and dimensions and reinforcing

☑ ☐ b) All posts and/or column footing including size and reinforcing

☑ ☐ c) Any special support required by soil analysis such as piling

☑ ☐ d) Location of any vertical steel

Roof System:

☑ ☐ a) Truss package including:

1. ✓ Truss layout and truss details signed and sealed by Fl. Pro. Eng.
2. ✓ Roof assembly (FBC 104.2.1 Roofing system, materials, manufacturer, fastening requirements and product evaluation with wind resistance rating)

☑ ☐ b) Conventional Framing Layout including:

1. Rafter size, species and spacing
2. Attachment to wall and uplift
3. ✓ Ridge beam sized and valley framing and support details
4. ✓ Roof assembly (FBC 104.2.1 Roofing systems, materials, manufacturer, fastening requirements and product evaluation with wind resistance rating)

Wall Sections including:

☑ ☐ a) Masonry wall

1. All materials making up wall
2. Block size and mortar type with size and spacing of reinforcement
3. Lintel, tie-beam sizes and reinforcement
4. Gable ends with rake beams showing reinforcement or gable truss and wall bracing details
5. All required connectors with uplift rating and required number and size of fasteners for continuous tie from roof to foundation
6. Roof assembly shown here or on roof system detail (FBC 104.2.1 Roofing system, materials, manufacturer, fastening requirements and product evaluation with resistance rating)
7. Fire resistant construction (if required)
8. Fireproofing requirements
9. Shoe type of termite treatment (termicide or alternative method)
10. Slab on grade
    a. Vapor retardant (6mil. Polyethylene with joints lapped 6 inches and sealed)
    b. Must show control joints, synthetic fiber reinforcement or Welded fire fabric reinforcement and supports
11. Indicate where pressure treated wood will be placed
12. Provide insulation R value for the following:
    a. Attic space
    b. Exterior wall cavity
    c. Crawl space (if applicable)

☑ ☐ **b) Wood frame wall**

1. All materials making up wall
2. Size and species of studs
3. Sheathing size, type and nailing schedule
4. Headers sized
5. Gable end showing balloon framing detail or gable truss and wall hinge bracing detail
6. All required fasteners for continuous tie from roof to foundation (truss anchors, straps, anchor bolts and washers)
7. Roof assembly shown here or on roof system detail (FBC104.2.1 Roofing system, materials, manufacturer, fastening requirements and product evaluation with wind resistance rating)
8. Fire resistant construction (if applicable)
9. Fireproofing requirements
10. Show type of termite treatment (termicide or alternative method)
11. Slab on grade
    a. Vapor retardant (6Mil. Polyethylene with joints lapped 6 inches and sealed
    b. Must show control joints, synthetic fiber reinforcement or welded wire fabric reinforcement and supports
12. Indicate where pressure treated wood will be placed
13. Provide insulation R value for the following:
    a. Attic space
    b. Exterior wall cavity
    c. Crawl space (if applicable)

☐ N/A ☐ c) Metal frame wall and roof (designed, signed and sealed by Florida Prof. Engineer or Architect)

Floor Framing System:

☐ N/A ☐ a) Floor truss package including layout and details, signed and sealed by Florida Registered Professional Engineer

☐ ☐ b) Floor joist size and spacing

☐ ☐ c) Girder size and spacing

☐ ☐ d) Attachment of joist to girder

☐ ☐ e) Wind load requirements where applicable

☑ ☐ **Plumbing Fixture layout**

Electrical layout including:

☑ ☐ a) Switches, outlets/receptacles, lighting and all required GFCI outlets identified

☑ ☐ b) Ceiling fans

☑ ☐ c) Smoke detectors

☑ ☐ d) Service panel and sub-panel size and location(s)

☑ ☐ e) Meter location with type of service entrance (overhead or underground)

☑ ☐ f) Appliances and HVAC equipment

☑ ☐ g) Arc Fault Circuits (AFCI) in bedrooms

HVAC information

☑ ☐ a) Manual J sizing equipment or equivalent computation

☑ ☐ b) Exhaust fans in bathroom

☑ ☐ **Energy Calculations** (dimensions shall match plans)

☑ ☐ **Gas System** Type (LP or Natural) Location and BTU demand of equipment

☑ ☐ **Disclosure Statement for Owner Builders**

☑ ☐ ***Notice Of Commencement Required Before Any Inspections Will Be Done**

☐ ☐ **Private Potable Water**

a) Size of pump motor

b) Size of pressure tank

c) Cycle stop valve if used

THE FOLLOWING ITEMS MUST BE SUBMITTED WITH BUILDING PLANS

1. **Building Permit Application:** A current Building Permit Application form is to be completed and submitted for all residential projects.

2. **Parcel Number:** The parcel number (Tax ID number) from the Property Appraiser (386) 758-1084 is required. A copy of property deed is also requested.

3. **Environmental Health Permit or Sewer Tap Approval:** A copy of the Environmental Health permit, existing septic approval or sewer tap approval is required before a building permit can be issued.
   (386) 758-1058 **(Toilet facilities shall be provided for construction workers)**

4. **City Approval:** If the project is to be located within the city limits of the Town of Fort White, prior approval is required. The Town of Fort White approval letter is required to be submitted by the owner or contractor to this office when applying for a Building Permit. (386) 497-2321

5. **Flood Information:** All projects within the Floodway of the Suwannee or Santa Fe Rivers shall require permitting through the Suwannee River Water Management District, before submitting application to this office. Any project located within a flood zone where the base flood elevation (100 year flood) has been established shall meet the requirements of Section 8.8 of the Columbia County Land Development Regulations. Any project located within a flood zone where the base flood elevation has not been established (Zone A) shall meet the requirements of Section 8.7 of the Columbia County Land Development Regulations.
   CERTIFIED FINISHED FLOOR ELEVATIONS WILL BE REQUIRED ON ANY PROJECT WHERE THE BASE FLOOD ELEVATION (100 YEAR FLOOD) HAS BEEN ESTABLISHED.
   A development permit will also be required. Development permit cost is **$50.00**

6. **Driveway Connection:** If the property does not have an existing access to a public road, then an application for a culvert permit (**$25.00**) must be made. If the applicant feels that a culvert is not needed, they may apply for a culvert waiver (**$50.00**). All culvert waivers are sent to the Columbia County Public Works Department for approval or denial.

7. **911 Address:** If the project is located in an area where the 911 address has been issued, then the proper paperwork from the 911 Addressing Department must be submitted. (386) 752-8787

ALL REQUIRED INFORMATION IS TO BE SUBMITTED FOR REVIEW. YOU WILL BE NOTIFIED WHEN YOUR APPLICATION AND PLANS ARE APPROVED AND READY TO PERMIT. PLEASE DO NOT EXPECT OR REQUEST THAT PERMIT APPLICATIONS BE REVIEWED OR APPROVED WHILE YOU ARE HERE – TIME WILL NOT ALLOW THIS –PLEASE DO NOT ASK

FORM 600A-2004R

EnergyGauge® 0.

FLORIDA ENERGY EFFICIENCY CODE FOR BUILDING CONSTRUCTION

Florida Department of Community Affairs

Residential Whole Building Performance Method A

Project Name:	**HARTLEY - RENEE MORRIS RESIDENCE**	Builder:	**HARTLEY BROTHERS CONS**
Address:		Permitting Office:	
City, State:	,	Permit Number:	
Owner:		Jurisdiction Number:	
Climate Zone:	**North**		

1. New construction or existing	New	
2. Single family or multi-family	Single family	
3. Number of units, if multi-family	1	
4. Number of Bedrooms	3	
5. Is this a worst case?	Yes	
6. Conditioned floor area (ft²)	1640 ft²	
7. Glass type[1] and area: (Label reqd. by 13-104.4.5 if not default)		
a. U-factor: (or Single or Double DEFAULT)	Description Area 7a. (Dble, U=0.4) 110.0 ft²	
b. SHGC: (or Clear or Tint DEFAULT)	7b. (SHGC=0.36) 181.0 ft²	
8. Floor types		
a. Slab-On-Grade Edge Insulation	R=0.0, 180.0(p) ft	
b. N/A		
c. N/A		
9. Wall types		
a. Frame, Wood, Exterior	R=13.0, 1224.0 ft²	
b. Frame, Wood, Adjacent	R=13.0, 216.0 ft²	
c. N/A		
d. N/A		
e. N/A		
10. Ceiling types		
a. Under Attic	R=30.0, 2195.0 ft²	
b. Under Attic	R=19.0, 132.0 ft²	
c. N/A		
11. Ducts		
a. Sup: Unc. Ret: Unc. AH: Garage	Sup. R=6.0, 186.0 ft	
b. N/A		
12. Cooling systems		
a. Central Unit	Cap: 36.0 kBtu/hr SEER: 14.00	
b. N/A		
c. N/A		
13. Heating systems		
a. Electric Heat Pump	Cap: 36.0 kBtu/hr HSPF: 8.10	
b. N/A		
c. N/A		
14. Hot water systems		
a. Electric Resistance	Cap: 50.0 gallons EF: 0.90	
b. N/A		
c. Conservation credits (HR-Heat recovery, Solar DHP-Dedicated heat pump)		
15. HVAC credits (CF-Ceiling fan, CV-Cross ventilation, HF-Whole house fan, PT-Programmable Thermostat, MZ-C-Multizone cooling, MZ-H-Multizone heating)		

Glass/Floor Area: 0.11

Total as-built points: 21485
Total base points: 23464

PASS

I hereby certify that the plans and specifications covered by this calculation are in compliance with the Florida Energy Code.

PREPARED BY: Gale Insulation

DATE: 6-21-07

I hereby certify that this building, as designed, is in compliance with the Florida Energy Code.

OWNER/AGENT: _____

DATE: _____

Review of the plans and specifications covered by this calculation indicates compliance with the Florida Energy Code. Before construction is completed this building will be inspected for compliance with Section 553.908 Florida Statutes.

GREAT SEAL OF THE STATE OF FLORIDA
IN GOD WE TRUST

BUILDING OFFICIAL: _____

DATE: _____

1 Predominant glass type. For actual glass type and areas, see Summer & Winter Glass output on pages 2&4.

SUMMER CALCULATIONS

Residential Whole Building Performance Method A - Details

ADDRESS: , , , PERMIT #:

BASE				AS-BUILT							
GLASS TYPES .18 X Conditioned Floor Area	X BSPM	= Points		Type/SC	Overhang Ornt	Len	Hgt	Area X	SPM X	SOF	= Points
.18	1640.0	18.59	5488.0	1.Double,U=0.39,SHGC=0.	W	0.0	0.0	35.0	20.65	1.00	722.0
				2.Double,U=0.39,SHGC=0.	N	0.0	0.0	12.0	10.21	1.00	122.0
				3.Double,U=0.39,SHGC=0.	E	0.0	0.0	110.0	22.56	1.00	2481.0
				4.Double,U=0.39,SHGC=0.	S	0.0	0.0	9.0	19.20	1.00	172.0
				5.Double,U=0.39,SHGC=0.	SW	0.0	0.0	15.0	21.53	1.00	322.0
				As-Built Total:				**181.0**			**3819.0**

WALL TYPES	Area X	BSPM =	Points	Type	R-Value	Area X	SPM =	Points
Adjacent	216.0	0.70	151.2	1. Frame, Wood, Exterior	13.0	1224.0	1.50	1836.0
Exterior	1224.0	1.70	2080.8	2. Frame, Wood, Adjacent	13.0	216.0	0.60	129.6
Base Total:	**1440.0**		**2232.0**	**As-Built Total:**		**1440.0**		**1965.6**

DOOR TYPES	Area X	BSPM =	Points	Type	Area X	SPM =	Points
Adjacent	20.0	2.40	48.0	1.Exterior Insulated	29.0	4.10	118.9
Exterior	29.0	6.10	176.9	2.Adjacent Insulated	20.0	1.60	32.0
Base Total:	**49.0**		**224.9**	**As-Built Total:**	**49.0**		**150.9**

CEILING TYPES	Area X	BSPM =	Points	Type	R-Value	Area X	SPM X SCM =	Points
Under Attic	1640.0	1.73	2837.2	1. Under Attic	30.0	2195.0	1.73 X 1.00	3797.4
				2. Under Attic	19.0	132.0	2.34 X 1.00	308.9
Base Total:	**1640.0**		**2837.2**	**As-Built Total:**		**2327.0**		**4106.2**

FLOOR TYPES	Area X	BSPM =	Points	Type	R-Value	Area X	SPM =	Points
Slab	180.0(p)	-37.0	-6660.0	1. Slab-On-Grade Edge Insulation	0.0	180.0(p	-41.20	-7416.0
Raised	0.0	0.00	0.0					
Base Total:			**-6660.0**	**As-Built Total:**		**180.0**		**-7416.0**

INFILTRATION	Area X	BSPM =	Points		Area X	SPM =	Points
	1640.0	10.21	16744.4		1640.0	10.21	16744.4

SUMMER CALCULATIONS

Residential Whole Building Performance Method A - Details

ADDRESS: , , , PERMIT #:

BASE			AS-BUILT						
Summer Base Points: 20866.5			**Summer As-Built Points:**						**19370.1**
Total Summer Points	X System Multiplier	= Cooling Points	Total Component (System - Points)	X Cap Ratio	X Duct Multiplier (DM x DSM x AHU)	X System Multiplier	X Credit Multiplier	= Cooling Points	
			(sys 1: Central Unit 36000btuh ,SEER/EFF(14.0) Ducts:Unc(S),Unc(R),Gar(AH),R6.0(INS)						
			19370	1.00	(1.09 x 1.147 x 1.00)	0.244	1.000	5903.8	
20866.5	**0.3250**	**6781.6**	**19370.1**	**1.00**	**1.250**	**0.244**	**1.000**	**5903.8**	

WINTER CALCULATIONS

Residential Whole Building Performance Method A - Details

ADDRESS: , , , PERMIT #:

BASE

GLASS TYPES .18 X Conditioned Floor Area	X BWPM	= Points
.18 1640.0	20.17	5954.0

WALL TYPES	Area X	BWPM =	Points
Adjacent	216.0	3.60	777.6
Exterior	1224.0	3.70	4528.8
Base Total:	**1440.0**		**5306.4**

DOOR TYPES	Area X	BWPM =	Points
Adjacent	20.0	11.50	230.0
Exterior	29.0	12.30	356.7
Base Total:	**49.0**		**586.7**

CEILING TYPES	Area X	BWPM =	Points
Under Attic	1640.0	2.05	3362.0
Base Total:	**1640.0**		**3362.0**

FLOOR TYPES	Area X	BWPM =	Points
Slab	180.0(p)	8.9	1602.0
Raised	0.0	0.00	0.0
Base Total:			**1602.0**

INFILTRATION	Area X	BWPM =	Points
	1640.0	-0.59	-967.6

AS-BUILT

Type/SC	Overhang Ornt	Len	Hgt	Area X	WPM X	WOF =	Points
1.Double,U=0.39,SHGC=0.	W	0.0	0.0	35.0	10.28	1.00	359.0
2.Double,U=0.39,SHGC=0.	N	0.0	0.0	12.0	12.38	1.00	148.0
3.Double,U=0.39,SHGC=0.	E	0.0	0.0	110.0	9.29	1.00	1021.0
4.Double,U=0.39,SHGC=0.	S	0.0	0.0	9.0	6.23	1.00	56.0
5.Double,U=0.39,SHGC=0.	SW	0.0	0.0	15.0	8.14	1.00	122.0
As-Built Total:				**181.0**			**1706.0**

Type	R-Value	Area X	WPM =	Points
1. Frame, Wood, Exterior	13.0	1224.0	3.40	4161.6
2. Frame, Wood, Adjacent	13.0	216.0	3.30	712.8
As-Built Total:		**1440.0**		**4874.4**

Type	Area X	WPM =	Points
1.Exterior Insulated	29.0	8.40	243.6
2.Adjacent Insulated	20.0	8.00	160.0
As-Built Total:	**49.0**		**403.6**

Type	R-Value	Area X	WPM X WCM =	Points
1. Under Attic	30.0	2195.0	2.05 X 1.00	4499.8
2. Under Attic	19.0	132.0	2.70 X 1.00	356.4
As-Built Total:		**2327.0**		**4856.1**

Type	R-Value	Area X	WPM =	Points
1. Slab-On-Grade Edge Insulation	0.0	180.0(p	18.80	3384.0
As-Built Total:		**180.0**		**3384.0**

Area X	WPM =	Points
1640.0	-0.59	-967.6

WINTER CALCULATIONS

Residential Whole Building Performance Method A - Details

ADDRESS: , , , PERMIT #:

BASE				AS-BUILT							
Winter Base Points:			**15843.5**	**Winter As-Built Points:**							**14256.5**
Total Winter Points	X	System Multiplier	= Heating Points	Total Component (System - Points)	X	Cap Ratio	X Duct Multiplier (DM x DSM x AHU)	X System Multiplier	X Credit Multiplier	=	Heating Points
				(sys 1: Electric Heat Pump 36000 btuh ,EFF(8.1) Ducts:Unc(S),Unc(R),Gar(AH),R6.0							
				14256.5		1.000	(1.069 x 1.169 x 1.00)	0.421	1.000		7500.3
15843.5		**0.5540**	**8777.3**	**14256.5**		**1.00**	**1.250**	**0.421**	**1.000**		**7500.3**

WATER HEATING & CODE COMPLIANCE STATUS

Residential Whole Building Performance Method A - Details

ADDRESS: , , , PERMIT #:

BASE					AS-BUILT							
WATER HEATING												
Number of Bedrooms	X	Multiplier	=	Total	Tank Volume	EF	Number of Bedrooms	X	Tank Ratio	X Multiplier	X Credit Multiplier	= Total
3		2635.00		7905.0	50.0	0.90	3		1.00	2693.56	1.00	8080.7
					As-Built Total:							**8080.7**

CODE COMPLIANCE STATUS

BASE				AS-BUILT			
Cooling Points +	Heating Points +	Hot Water Points =	Total Points	Cooling Points +	Heating Points +	Hot Water Points =	Total Points
6782	**8777**	**7905**	**23464**	**5904**	**7500**	**8081**	**21485**

PASS

Code Compliance Checklist

Residential Whole Building Performance Method A - Details

ADDRESS: , , , PERMIT #:

6A-21 INFILTRATION REDUCTION COMPLIANCE CHECKLIST

COMPONENTS	SECTION	REQUIREMENTS FOR EACH PRACTICE	CHECK
Exterior Windows & Doors	606.1.ABC.1.1	Maximum:.3 cfm/sq.ft. window area; .5 cfm/sq.ft. door area.	
Exterior & Adjacent Walls	606.1.ABC.1.2.1	Caulk, gasket, weatherstrip or seal between: windows/doors & frames, surrounding wall; foundation & wall sole or sill plate; joints between exterior wall panels at corners; utility penetrations; between wall panels & top/bottom plates; between walls and floor. EXCEPTION: Frame walls where a continuous infiltration barrier is installed that extends from, and is sealed to, the foundation to the top plate.	
Floors	606.1.ABC.1.2.2	Penetrations/openings >1/8" sealed unless backed by truss or joint members. EXCEPTION: Frame floors where a continuous infiltration barrier is installed that is sealed to the perimeter, penetrations and seams.	
Ceilings	606.1.ABC.1.2.3	Between walls & ceilings; penetrations of ceiling plane of top floor; around shafts, chases, soffits, chimneys, cabinets sealed to continuous air barrier; gaps in gyp board & top plate; attic access. EXCEPTION: Frame ceilings where a continuous infiltration barrier is installed that is sealed at the perimeter, at penetrations and seams.	
Recessed Lighting Fixtures	606.1.ABC.1.2.4	Type IC rated with no penetrations, sealed; or Type IC or non-IC rated, installed inside a sealed box with 1/2" clearance & 3" from insulation; or Type IC rated with < 2.0 cfm from conditioned space, tested.	
Multi-story Houses	606.1.ABC.1.2.5	Air barrier on perimeter of floor cavity between floors.	
Additional Infiltration reqts	606.1.ABC.1.3	Exhaust fans vented to outdoors, dampers; combustion space heaters comply with NFPA, have combustion air.	

6A-22 OTHER PRESCRIPTIVE MEASURES (must be met or exceeded by all residences.)

COMPONENTS	SECTION	REQUIREMENTS	CHECK
Water Heaters	612.1	Comply with efficiency requirements in Table 612.1.ABC.3.2. Switch or clearly marked cir breaker (electric) or cutoff (gas) must be provided. External or built-in heat trap required.	
Swimming Pools & Spas	612.1	Spas & heated pools must have covers (except solar heated). Non-commercial pools must have a pump timer. Gas spa & pool heaters must have a minimum thermal efficiency of 78%.	
Shower heads	612.1	Water flow must be restricted to no more than 2.5 gallons per minute at 80 PSIG.	
Air Distribution Systems	610.1	All ducts, fittings, mechanical equipment and plenum chambers shall be mechanically attached, sealed, insulated, and installed in accordance with the criteria of Section 610. Ducts in unconditioned attics: R-6 min. insulation.	
HVAC Controls	607.1	Separate readily accessible manual or automatic thermostat for each system.	
Insulation	604.1, 602.1	Ceilings-Min. R-19. Common walls-Frame R-11 or CBS R-3 both sides. Common ceiling & floors R-11.	

ENERGY PERFORMANCE LEVEL (EPL) DISPLAY CARD

ESTIMATED ENERGY PERFORMANCE SCORE* = 86.2

The higher the score, the more efficient the home.

1.	New construction or existing	New	
2.	Single family or multi-family	Single family	
3.	Number of units, if multi-family	1	
4.	Number of Bedrooms	3	
5.	Is this a worst case?	Yes	
6.	Conditioned floor area (ft²)	1640 ft²	
7.	Glass type[1] and area: (Label reqd. by 13-104.4.5 if not default)		
a.	U-factor: (or Single or Double DEFAULT)	7a. (Dble, U=0.4) 110.0 ft²	
b.	SHGC: (or Clear or Tint DEFAULT)	7b. (SHGC=0.36) 181.0 ft²	
8.	Floor types		
a.	Slab-On-Grade Edge Insulation	R=0.0, 180.0(p) ft	
b.	N/A		
c.	N/A		
9.	Wall types		
a.	Frame, Wood, Exterior	R=13.0, 1224.0 ft²	
b.	Frame, Wood, Adjacent	R=13.0, 216.0 ft²	
c.	N/A		
d.	N/A		
e.	N/A		
10.	Ceiling types		
a.	Under Attic	R=30.0, 2195.0 ft²	
b.	Under Attic	R=19.0, 132.0 ft²	
c.	N/A		
11.	Ducts		
a.	Sup: Unc. Ret: Unc. AH: Garage	Sup. R=6.0, 186.0 ft	
b.	N/A		

12.	Cooling systems		
a.	Central Unit	Cap: 36.0 kBtu/hr	
		SEER: 14.00	
b.	N/A		
c.	N/A		
13.	Heating systems		
a.	Electric Heat Pump	Cap: 36.0 kBtu/hr	
		HSPF: 8.10	
b.	N/A		
c.	N/A		
14.	Hot water systems		
a.	Electric Resistance	Cap: 50.0 gallons	
		EF: 0.90	
b.	N/A		
c.	Conservation credits (HR-Heat recovery, Solar DHP-Dedicated heat pump)		
15.	HVAC credits (CF-Ceiling fan, CV-Cross ventilation, HF-Whole house fan, PT-Programmable Thermostat, MZ-C-Multizone cooling, MZ-H-Multizone heating)		

I certify that this home has complied with the Florida Energy Efficiency Code For Building Construction through the above energy saving features which will be installed (or exceeded) in this home before final inspection. Otherwise, a new EPL Display Card will be completed based on installed Code compliant features.

Builder Signature: _____ Date: _____

Address of New Home: _____ City/FL Zip: _____

**NOTE: The home's estimated energy performance score is only available through the FLA/RES computer program. This is not a Building Energy Rating. If your score is 80 or greater (or 86 for a US EPA/DOE EnergyStar™ designation), your home may qualify for energy efficiency mortgage (EEM) incentives if you obtain a Florida Energy Gauge Rating. Contact the Energy Gauge Hotline at 321/638-1492 or see the Energy Gauge web site at www.fsec.ucf.edu for information and a list of certified Raters. For information about Florida's Energy Efficiency Code For Building Construction, contact the Department of Community Affairs at 850/487-1824.*

1 Predominant glass type. For actual glass type and areas, see Summer & Winter Glass output on pages 2&4.

Load Short Form
Entire House
Bounds Heating & Air

Job: Morris Res.
Date: 06-06-07
By: Michael Chartier

Project Information

For: Hartley Bros.

Design Information

	Htg	Clg
Outside db (°F)	***31***	***93***
Inside db (°F)	68	75
Design TD (°F)	37	18
Daily range	-	M
Inside humidity (%)	-	50
Moisture difference (gr/lb)	-	50

Infiltration

Method	Simplified
Construction quality	Tight
Fireplaces	1 (Average)

HEATING EQUIPMENT

Make	Carrier
Trade	Base 13 Puron HP
Model	25HBA336A30

Efficiency	8.1 HSPF	
Heating input		
Heating output	34400	Btuh @ 47°F
Temperature rise	28	°F
Actual air flow	1127	cfm
Air flow factor	0.037	cfm/Btuh
Static pressure	1.00	in H2O
Space thermostat		

COOLING EQUIPMENT

Make	Carrier
Trade	Base 13 Puron HP
Cond	25HBA336A30
Coil	FV4BNF003

Efficiency	14 SEER	
Sensible cooling	23660	Btuh
Latent cooling	10140	Btuh
Total cooling	33800	Btuh
Actual air flow	1127	cfm
Air flow factor	0.045	cfm/Btuh
Static pressure	1.00	in H2O
Load sensible heat ratio	0.84	

ROOM NAME	Area (ft²)	Htg load (Btuh)	Clg load (Btuh)	Htg AVF (cfm)	Clg AVF (cfm)
master suite	208	4693	5242	173	238
master bath	152	3468	2438	128	111
toilet	28	529	157	20	7
a/c	15	0	0	0	0
laundry	72	1188	348	44	16
dining	128	2583	2091	95	95
foyer	69	1098	457	41	21
nook	92	3362	1923	124	87
kitchen	92	134	1687	5	76
living room	377	3501	5179	129	235
bed room 2	156	4284	1715	158	78
bath 2	72	1659	1880	61	85
bed room 3	144	4022	1736	149	79
hall	36	0	0	0	0

Bold/italic values have been manually overridden

Printout certified by ACCA to meet all requirements of Manual J 8th Ed.

Entire House	1640	30521	24852	1127	1127
Other equip loads		2692	1310		
Equip. @ 0.98 RSM			25638		
Latent cooling			5112		
TOTALS	1640	33213	30751	1127	1127

Bold/italic values have been manually overridden

Printout certified by ACCA to meet all requirements of Manual J 8th Ed.

Duct System Summary
Entire House
Bounds Heating & Air

Job: Morris Res.
Date: 06-06-07
By: Michael Chartier

Project Information

For: Hartley Bros.

	Heating		Cooling	
External static pressure	1.00	in H2O	***1.00***	in H2O
Pressure losses	0.30	in H2O	0.30	in H2O
Available static pressure	0.70	in H2O	0.70	in H2O
Supply / return available pressure	0.59 / 0.11	in H2O	0.59 / 0.11	in H2O
Lowest friction rate	***0.100***	in/100ft	***0.100***	in/100ft
Actual air flow	1127	cfm	1127	cfm
Total effective length (TEL)		627 ft		

Supply Branch Detail Table

Name		Design (Btuh)	Htg (cfm)	Clg (cfm)	Design FR	Diam (in)	Rect Size (in)	Duct Matl	Actual Ln (ft)	Ftg.Eqv Ln (ft)	Trunk
master suite	c	2621	87	119	0.100	7	16x3	VIFx	27.0	415.0	st1
master suite-A	c	2621	87	119	0.100	7	16x3	VIFx	21.0	415.0	st1
master bath	h	3468	128	111	0.100	7	16x3	VIFx	20.0	435.0	st1
toilet	h	529	20	7	0.100	4	16x1	VIFx	5.0	180.0	st1
laundry	h	1188	44	16	0.100	5	16x1	VIFx	7.0	180.0	st1
dining	h	2583	95	95	0.100	7	16x3	VIFx	21.0	265.0	st1
foyer	h	1098	41	21	0.100	5	16x1	VIFx	30.0	265.0	st1
nook	h	3362	124	87	0.100	7	16x3	VIFx	30.0	435.0	st1
kitchen	c	1687	5	76	0.100	6	16x2	VIFx	28.0	465.0	st1
living room-A	c	2590	65	117	0.100	7	16x3	VIFx	25.0	350.0	st1
living room	c	2590	65	117	0.100	7	16x3	VIFx	34.0	350.0	st1
bed room 2	h	4284	158	78	0.100	8	16x4	VIFx	55.0	475.0	st1
bath 2	c	1880	61	85	0.100	6	16x2	VIFx	46.0	425.0	st1
bed room 3	h	4022	149	79	0.100	8	16x4	VIFx	41.0	265.0	st1

Supply Trunk Detail Table

Name	Trunk Type	Htg (cfm)	Clg (cfm)	Design FR	Veloc (fpm)	Diam (in)	Rect Duct Size (in)	Duct Material	Trunk
st1	Peak AVF	1127	1127	0.100	780	16	16 x 13	RectFbg	

Bold/italic values have been manually overridden

Return Branch Detail Table

Name	Grill Size (in)	Htg (cfm)	Clg (cfm)	TEL (ft)	Design FR	Veloc (fpm)	Diam (in)	RectSize (in)	Stud/Joist Opening (in)	Duct Matl	Trunk
rb1	0x0	1127	1127	97.0	0.050	390	22	16x 26		VIFx	rt1

Return Trunk Detail Table

Name	Trunk Type	Htg (cfm)	Clg (cfm)	Design FR	Veloc (fpm)	Diam (in)	Rect Duct Size (in)	Duct Material	Trunk
rt1	Peak AVF	1127	1127	0.050	429	21	18 x 21	RectFbg	

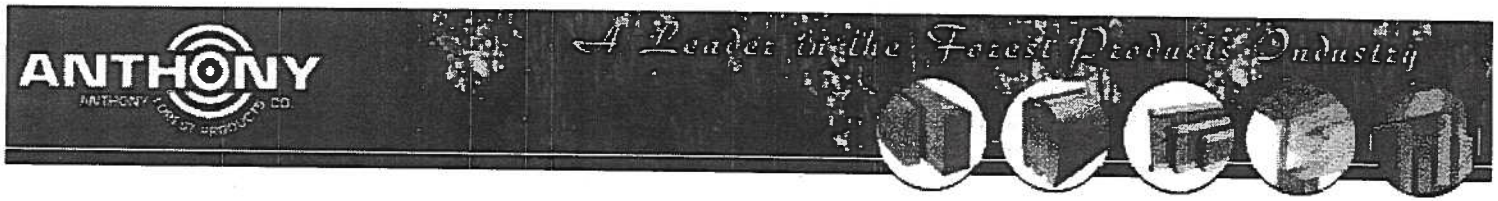

Our Products
Power Beam
Power Column
Power Log
Power Joist
Power Header
Power Plank
24F Stock Glulam
AFP 1.6 Short Span Header
Southern Pine Lumber
Custom Laminated Products
Manufactured Wood Chips
Glulam MSDS Sheets
I-Joist MSDS Sheets
Code Reports
Our Companies
Forestry
About Us
Product Information
What's New
Home

info@AnthonyForest.com

GARAGE HEADER PLF CAPACITY

3-1/2" Width Garage Header PLF Capacity

GARAGE HEADER SUPPORTING ROOF LOADS ONLY
115% SNOW LOAD AREA

Rough Opening	8-3/8"		9-3/4"		11-1/4"		12-5/8"		14"		15-3/8"		16-3/4"	
	Live Load L/240	Total Load L/180	Live Load L/240	Total Load L/180	Live Load L/240	Total Load L/180	Live Load L/240	Total Load L/180	Live Load L/240	Total Load L/180	Live Load L/240	Total Load L/180	Live Load L/240	Total Load L/180
9'3"	884	896		1216		1573		1790		2048		2322		**2568**
16'3"	161	207	254	330	390	510	552	669	752	824	974	980		1165
18'3"	114	145	180	231	277	359	391	510	534	653	707	789	896	925

GARAGE HEADER SUPPORTING ROOF LOADS ONLY
125% NON-SNOW LOAD AREA

Rough Opening	8-3/8"		9-3/4"		11-1/4"		12-5/8"		14"		15-3/8"		16-3/4"	
	Live Load L/240	Total Load L/180	Live Load L/240	Total Load L/180	Live Load L/240	Total Load L/180	Live Load L/240	Total Load L/180	Live Load L/240	Total Load L/180	Live Load L/240	Total Load L/180	Live Load L/240	Total Load L/180
9'3"	884	975		1322		1683		1947		2227		**2481**		**2793**
16'3"	161	207	254	330	390	510	552	724	752	897	974	1067	1259	1267
18'3"	114	145	180	231	277	359	391	510	534	699	693	847	896	1007

GARAGE HEADER SUPPORTING ROOF, WALL, AND FLOOR LOADS
100% LOAD DURATION

Rough Opening	8-3/8"		9-3/4"		11-1/4"		12-5/8"		14"		15-3/8"		16-3/4"	
	Live Load L/360	Total Load L/240	Live Load L/360	Total Load L/240	Live Load L/360	Total Load L/240	Live Load L/360	Total Load L/240	Live Load L/360	Total Load L/240	Live Load L/360	Total Load L/240	Live Load L/360	Total Load L/240
9'3"	562	778	888	1056	1363	1367		1582		1779		2018		2272
16'3"	107	153	169	245	260	380	368	540	501	715	664	864	840	1011
18'3"	76	107	120	171	185	267	261	380	356	521	471	684	609	813

Notes:

1. Values shown are the maximum uniform loads in pounds per lineal foot (PLF) that can be applied to the header. Header weight has been subtracted from the allowable total load.
2. Tables are based on simple span uniform load conditions using a design span equal to the center-to-center of bearing. Non-shaded areas are based on 3" of bearing at each support, shaded areas on 4.5" of bearing, and shaded & outlined areas on 6" of bearing at supports.
3. Headers are assumed to be loaded on the top edge with continuous lateral support along compression edge.
4. When no live load is listed, total load controls.
5. Deflection limits are listed within the PLF table heading.

Garage header sizing using PLF tables:

To size a garage header supporting roof only, determine the total load in pounds per lineal foot (PLF). Check the appropriate PLF table for a deader supporting roof loads only (125% Non-Snow vs. 115% Snow) and select a member with a total load and live load capacity which meets or exceeds the design load for the rough opening size. For a garage header supporting roof, wall, and floor framing, determine the total load and live load in pounds per lineal foot (PLF). Select a header size from the roof, wall, and floor table (100% load duration) which has a total load *and* live load capacity equal to or greater than the design load for the appropriate rough opening.

◄ Back to Power Header

Copyright 1997-2007. All rights reserved.

Masonite

SIDE-HINGED WOOD-EDGE STEEL DOOR UNIT
6'-8" GLAZED DOUBLE DOOR WITH / WITHOUT SIDELITES

GENERAL NOTES

1. EVALUATED FOR USE IN LOCATIONS ADHERING TO THE FLORIDA BUILDING CODE AND WHERE PRESSURE REQUIREMENTS AS DETERMINED BY ASCE 7, MINIMUM DESIGN LOADS FOR BUILDINGS AND OTHER STRUCTURES, DOES NOT EXCEED THE DESIGN PRESSURES LISTED
2. HURRICANE PROTECTIVE SYSTEM (SHUTTERS) IS REQUIRED
3. POLYURETHANE CORE FLAME SPREAD INDEX OF 50 AND SMOKE DEVELOPED INDEX OF 80 PER ASTM E84
4. PLASTICS TESTING OF LITE FRAME MATERIAL:

TEST DESCRIPTION	DESIGNATION	RESULT
SELF IGNITION TEMP	ASTM D1929	680 °F > 550 °F
RATE OF BURNING	ASTM D635	1.10 IN/MIN
SMOKE DENSITY	ASTM D2843	59.6%
TENSILE STRENGTH*	ASTM D638	−7.48% DEFT

* COMPARATIVE TENSILE STRENGTH AFTER WEATHERING 4500 HOURS XENON ARC METHOD 1

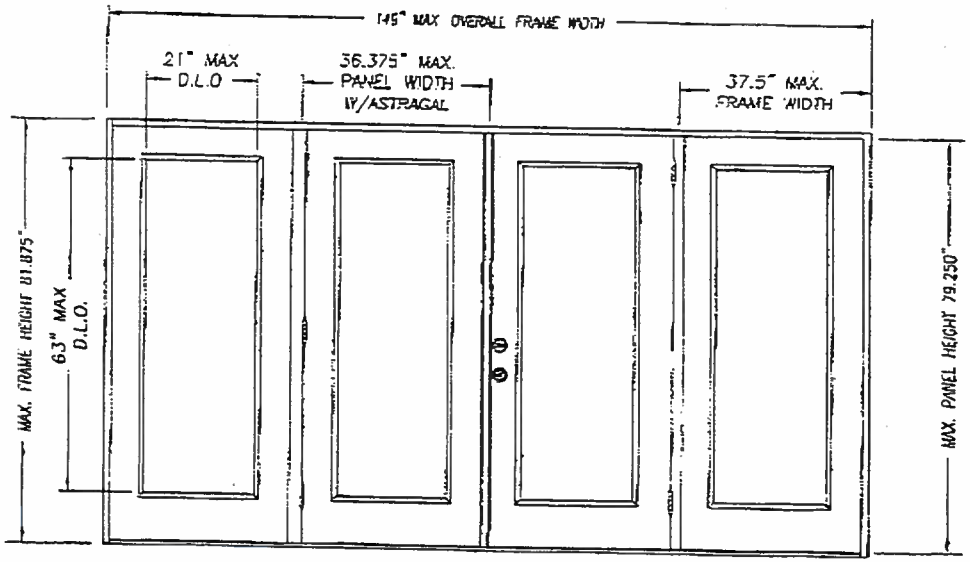

DOUBLE INSWING UNIT W/SIDELITES

Acceptance to NAMI
Certification No.: NI006110
Reviewed By:
Date Reviewed: 8/10/05

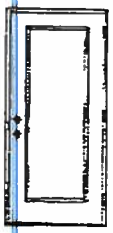

SINGLE DOOR UNIT

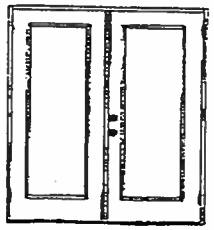

DOUBLE DOOR UNIT

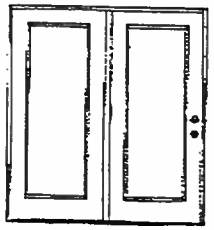

SINGLE DOOR UNIT WITH SIDELITE

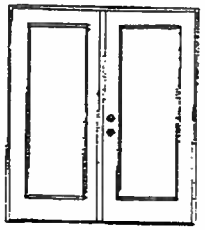

SINGLE DOOR UNIT WITH SIDELITE

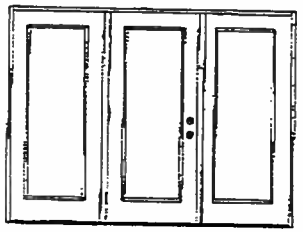

SINGLE DOOR UNIT W/SIDELITES

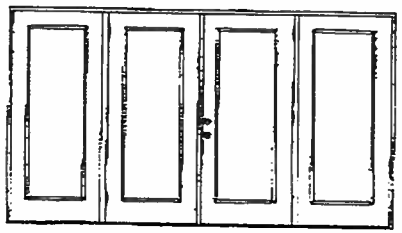

DOUBLE DOOR UNIT W/SIDELITES

TABLE OF CONTENTS

SHEET #	DESCRIPTION
1	TYPICAL ELEVATIONS & GENERAL NOTES
2	ANCHORING LOCATIONS & DETAILS
3	ANCHORING LOCATIONS & DETAILS

CONFIG	MAX WIDTH	DESIGN PRESSURE RATING INSWING	DESIGN PRESSURE RATING OUTSWING	WHERE WATER INFILTRATION PERFORMANCE IS REQUIRED TO BE 15% OF DESIGN PRESSURE INSWING	WHERE WATER INFILTRATION PERFORMANCE IS REQUIRED TO BE 15% OF DESIGN PRESSURE OUTSWING
X	37.5"	+50.5 / −50.5	+50.5 / −50.5	+19.0 / −19.0	+50.5 / −50.5
XX	74"	+50.5 / −50.5	+50.5 / −50.5	+19.0 / −19.0	+50.5 / −50.5
OX or XO	75"	+50.5 / −50.5	+50.5 / −50.5	+19.0 / −19.0	+50.5 / −50.5
OXO	112.5"	+50.5 / −50.5	+50.5 / −50.5	+19.0 / −19.0	+50.5 / −50.5
OXXO	149"	+50.5 / −50.5	+50.5 / −50.5	+19.0 / −19.0	+50.5 / −50.5

MASONITE INTERNATIONAL CORP.
7300 REAMES RD.
CHARLOTTE, NC 28216

PRODUCT: "EXTERIOR DOOR PRODUCT" DOUBLE 6'8" GLAZED WOOD-EDGE STEEL DOOR

PART OR ASSEMBLY: TYPICAL ELEVATIONS & GENERAL NOTES

NO.	DATE	BY

DATE: 7/11/05
SCALE: N.T.S.
DWG. BY: SWS
CHK. BY:
DRAWING NO.: DWG-MA-FL0120-0
SHEET 1 OF 3

Masonite

SIDE-HINGED WOOD-EDGE STEEL DOOR UNIT
5'-8" DOUBLE DOOR WITH / WITHOUT SIDELITES

GENERAL NOTES

1. EVALUATED FOR USE IN LOCATIONS ADHERING TO THE FLORIDA BUILDING CODE AND WHERE PRESSURE REQUIREMENTS AS DETERMINED BY ASCE 7, MINIMUM DESIGN LOADS FOR BUILDINGS AND OTHER STRUCTURES, DOES NOT EXCEED THE DESIGN PRESSURES LISTED.
2. HURRICANE PROTECTIVE SYSTEM (SHUTTERS) IS NOT REQUIRED ON OPAQUE PANELS, BUT IS REQUIRED ON GLAZED SIDELITES
3. POLYURETHANE CORE FLAME SPREAD INDEX OF 50 AND SMOKE DEVELOPED INDEX OF 60 PER ASTM E84
4. PLASTICS TESTING OF LITE FRAME MATERIAL:

TEST DESCRIPTION	DESIGNATION	RESULT
SELF IGNITION TEMP	ASTM D1929	680 °F > 650 °F
RATE OF BURNING	ASTM D635	1.10 IN/MIN
SMOKE DENSITY	ASTM D2843	69.6%
TENSILE STRENGTH*	ASTM D638	-7.48% DFF

* COMPARATIVE TENSILE STRENGTH AFTER WEATHERING 4500 HOURS XENON ARC METHOD 1

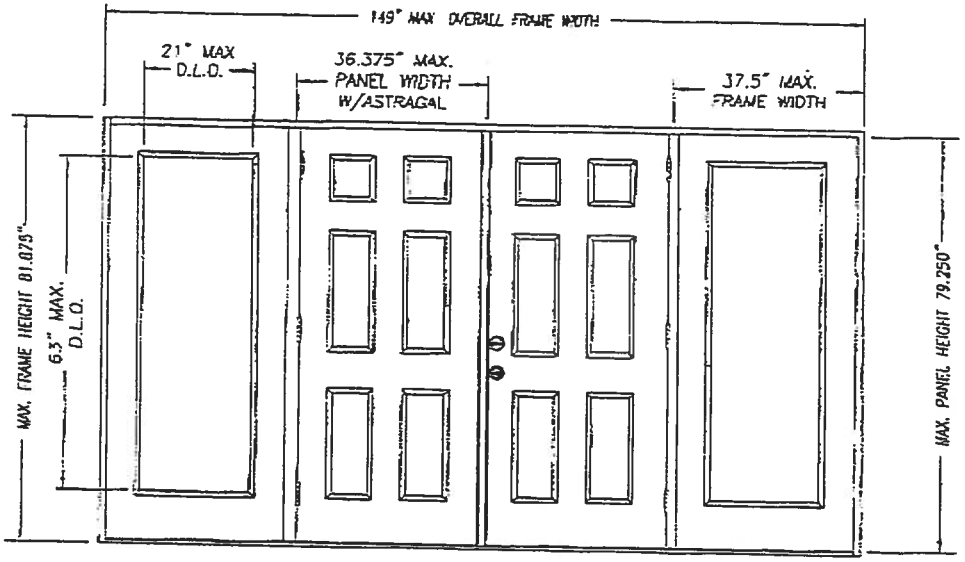

DOUBLE INSWING UNIT W/SIDELITES

Activation to NAMI
Certification No: NT006110
Reviewed By:
Date Reviewed: 8/10/05

SINGLE DOOR UNIT

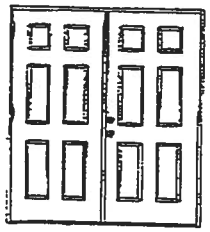

DOUBLE DOOR UNIT

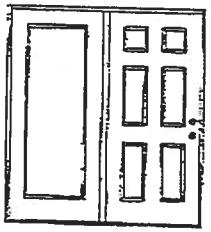

SINGLE DOOR UNIT WITH SIDELITE

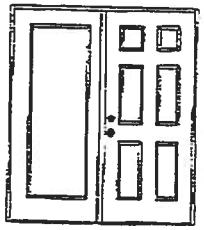

SINGLE DOOR UNIT WITH SIDELITE

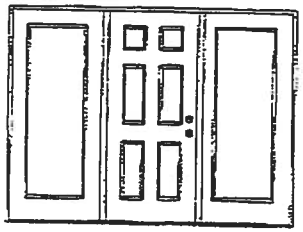

SINGLE DOOR UNIT W/SIDELITES

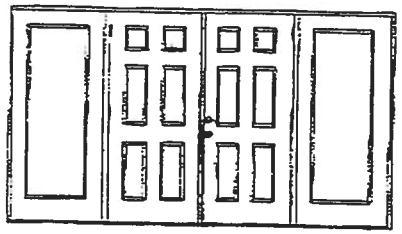

DOUBLE DOOR UNIT W/SIDELITES

TABLE OF CONTENTS

SHEET #	DESCRIPTION
1	TYPICAL ELEVATIONS & GENERAL NOTES
2	ANCHORING LOCATIONS & DETAILS
3	ANCHORING LOCATIONS & DETAILS

CONFIG	MAX WIDTH	DESIGN PRESSURE RATING INSWING	DESIGN PRESSURE RATING OUTSWING	WHERE WATER INFILTRATION PERFORMANCE IS REQUIRED TO BE 15% OF DESIGN PRESSURE INSWING	WHERE WATER INFILTRATION PERFORMANCE IS REQUIRED TO BE 15% OF DESIGN PRESSURE OUTSWING
X	37.5"	+76.0 / -75.0	+76.0 / -76.0	+19.0 / -19.0	+55.0 / -55.0
XX	74"	+55.0 / -55.0	+55.0 / -55.0	+19.0 / -19.0	+55.0 / -55.0
OX or XO	75"	+55.0 / -55.0	+55.0 / -55.0	+19.0 / -19.0	+55.0 / -55.0
OXO	112.5"	+55.0 / -55.0	+55.0 / -55.0	+19.0 / -19.0	+55.0 / -55.0
OXXO	149"	+55.0 / -55.0	+55.0 / -55.0	+19.0 / -19.0	+55.0 / -55.0

MASONITE INTERNATIONAL CORP.
7300 REAMES RD.
CHARLOTTE, NC 28216

PRODUCT: "EXTERIOR DOOR PRODUCT" DOUBLE 6'8" OPAQUE WOOD-EDGE STEEL DOOR

PART OR ASSEMBLY: TYPICAL ELEVATIONS & GENERAL NOTES

NO.	DATE	BY

DATE: 7/11/05
SCALE: N.T.S.
DWN. BY: SWS
CHK. BY:
DRAWING NO.: DWG-UA-FL3126-05
SHEET 1 OF 3

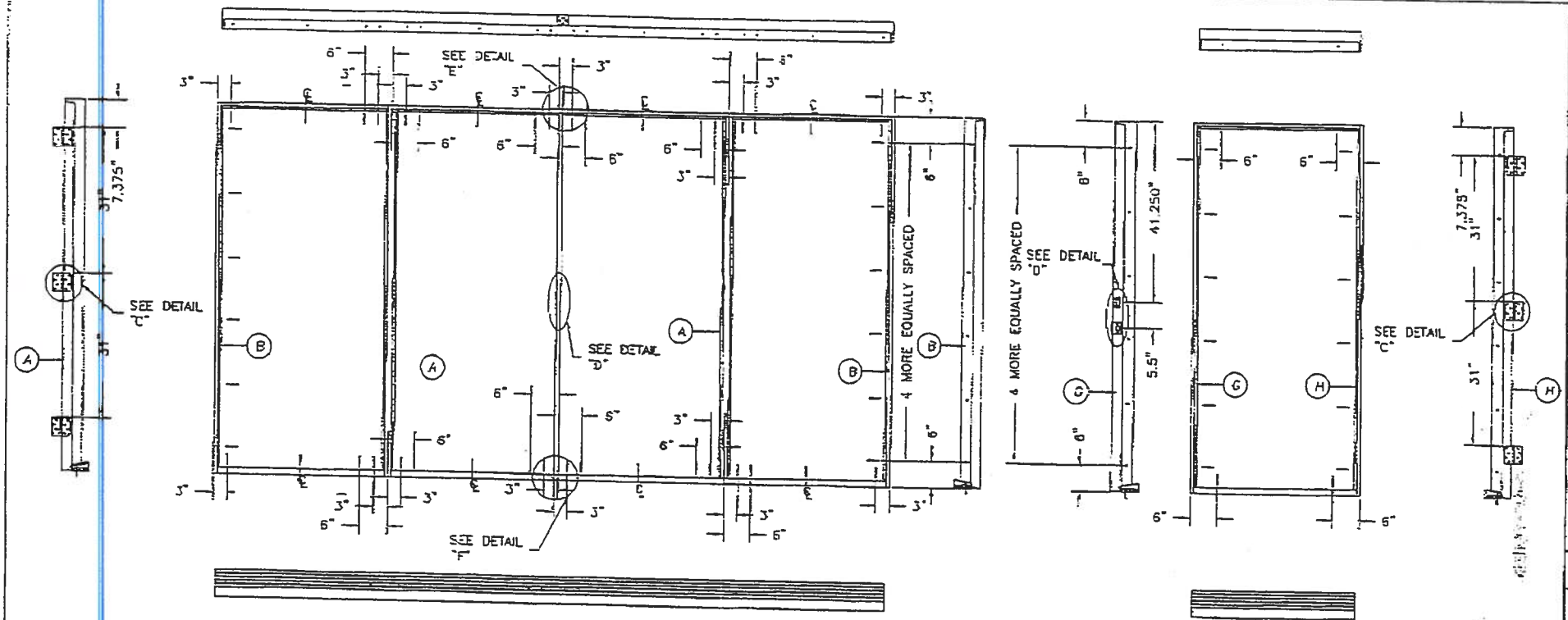

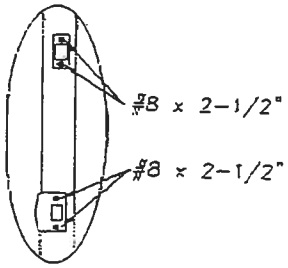

DETAIL "D"

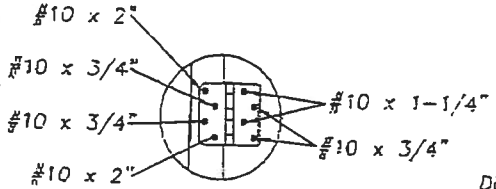

DETAIL "C"

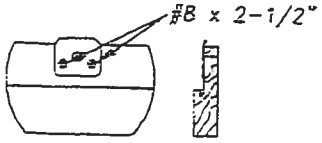

DETAIL "E" ASTRAGAL

ATTACH ASTRAGAL RETAINER BOLT STRIKE PLATE TO FRAME AS SHOWN.

ASTRAGAL RETAINER BOLT HOLE MUST BE DRILLED THROUGH THE THRESHOLD & INTO THE STRUCTURE DEEP ENOUGH FOR A 1.375" THROW

DETAIL "F" ASTRAGAL

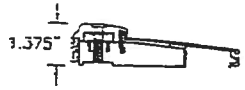

INSWING THRESHOLD

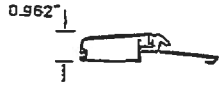

OUTSWING THRESHOLD

Attachment to HVRI
Certification No: NT006110
Reviewed By:
Date Reviewed: 8/10/05

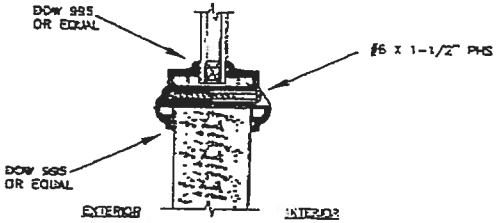

TYPICAL GLAZING DETAIL

MASONITE INTERNATIONAL CORP.
7300 REAMES RD.
CHARLOTTE, NC 28216

PRODUCT: "EXTERIOR DOOR PRODUCT" DOUBLE 6'-8" OPAQUE ROOF-LINE STEEL DOOR

PART OR ASSEMBLY: ANCHORING LOCATIONS & DETAILS

NO.	DATE	BY	REVISIONS

DATE: 7/11/05
SCALE: N.T.S.
DWG. BY: SWS
CHK. BY:
DRAWING NO: DWG-WA-FL0125-05
SHEET 2 OF 3

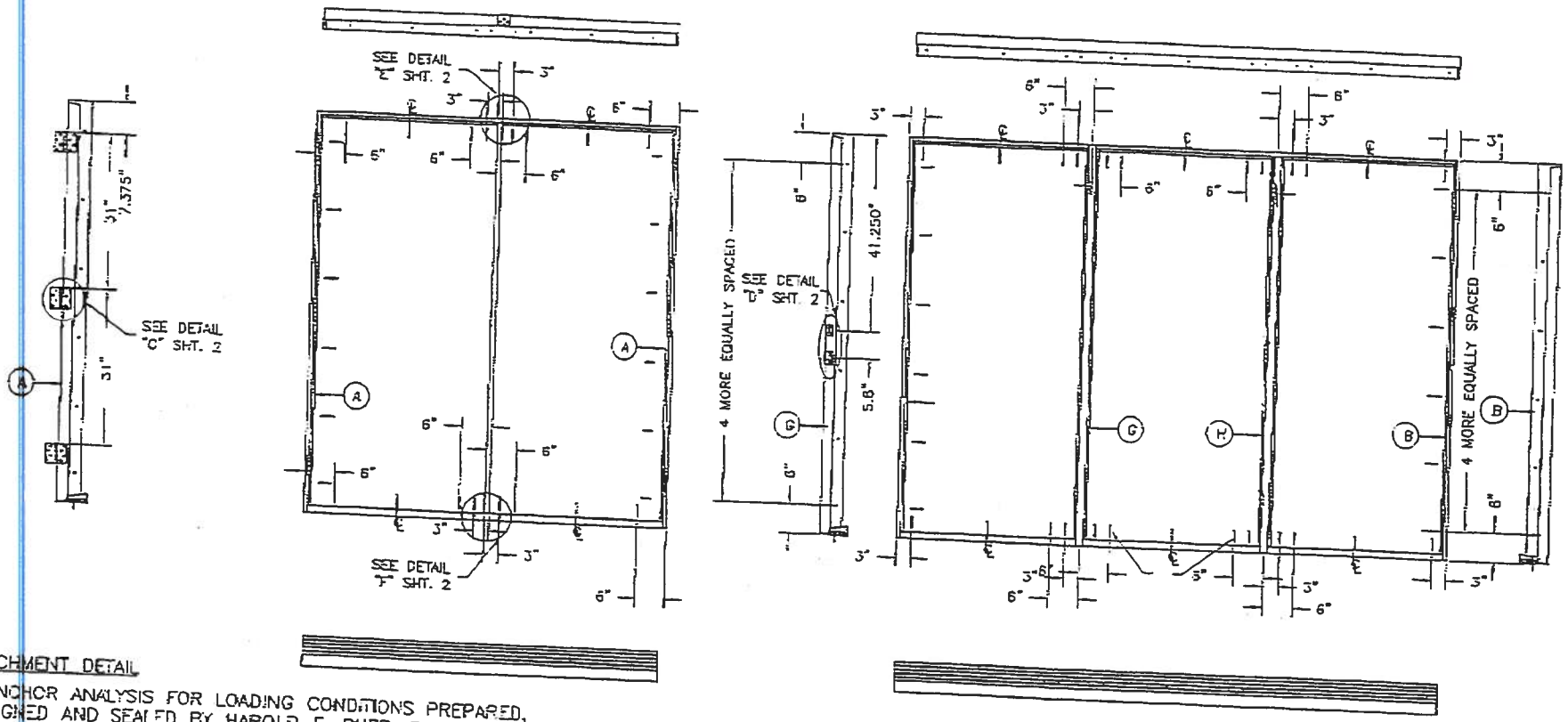

ATTACHMENT DETAIL

1. ANCHOR ANALYSIS FOR LOADING CONDITIONS PREPARED, SIGNED AND SEALED BY HAROLD E. RUPP, PE (FLORIDA #15935) WITH THE LOWEST (LEAST) FASTENER RATING FROM THE DIFFERENT FASTENERS BEING CONSIDERED FOR USE. JAMB, HEAD, AND THRESHOLD FASTENERS ANALYZED FOR THIS UNIT INCLUDE #10 WOOD SCREWS OR 3/16" TAPCONS. A PHYSICAL SHIM MUST BE PLACED IN SHIM SPACE AT EACH ANCHOR LOCATION.
2. THE WOOD SCREW SINGLE SHEAR DESIGN VALUES COME FROM ANSI/AF&PA NDA FOR SOUTHERN PINE LUMBER AND ACHEIVEMENT OF 1-1/2" MINIMUM EMBEDMENT. THE TAPCON MUST ACHIEVE MINIMUM EMBEDMENT OF 1-1/4".
3. WOOD BUCKS BY OTHERS MUST BE ANCHORED PROPERLY TO TRANSFER LOADS TO STRUCTURE.
4. MINIMUM DESIGN VALUE STRENGTH OF ANCHORS 171 LBS.

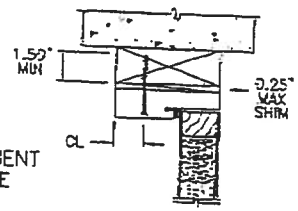

TYPICAL ANCHOR INSTALLATION

HARDWARE SCHEDULE

1.	KWIKSET OR SCHLEGE ANSI/BHMA GRADE 3 OR BETTER CYLINDRICAL AND DEADLOCK HARDWARE TO BE INSTALLED AT 5-1/2" CENTERLINE
2.	4" X 4" FULL MORTISE BUTT HINGES

Addendum to HSM
Certification No: NT006110
Reviewed By:
Date Reviewed: 8/16/05

MASONITE INTERNATIONAL CORP.
7300 REAMES RD.
CHARLOTTE, NC 28216

PRODUCT: EXTERIOR DOOR PRODUCT 6'-8" WOOD-EDGE STEEL OPAQUE DOUBLE DOOR UNIT
PART OR ASSEMBLY: ANCHORING LOCATIONS

NO.	DATE	BY

DATE: 7/11/05
SCALE: N.T.S.
DWN. BY: SWS
CHK. BY:
DRAWING NO.: DWG-MA-FL0123-05
SHEET 3 OF 3

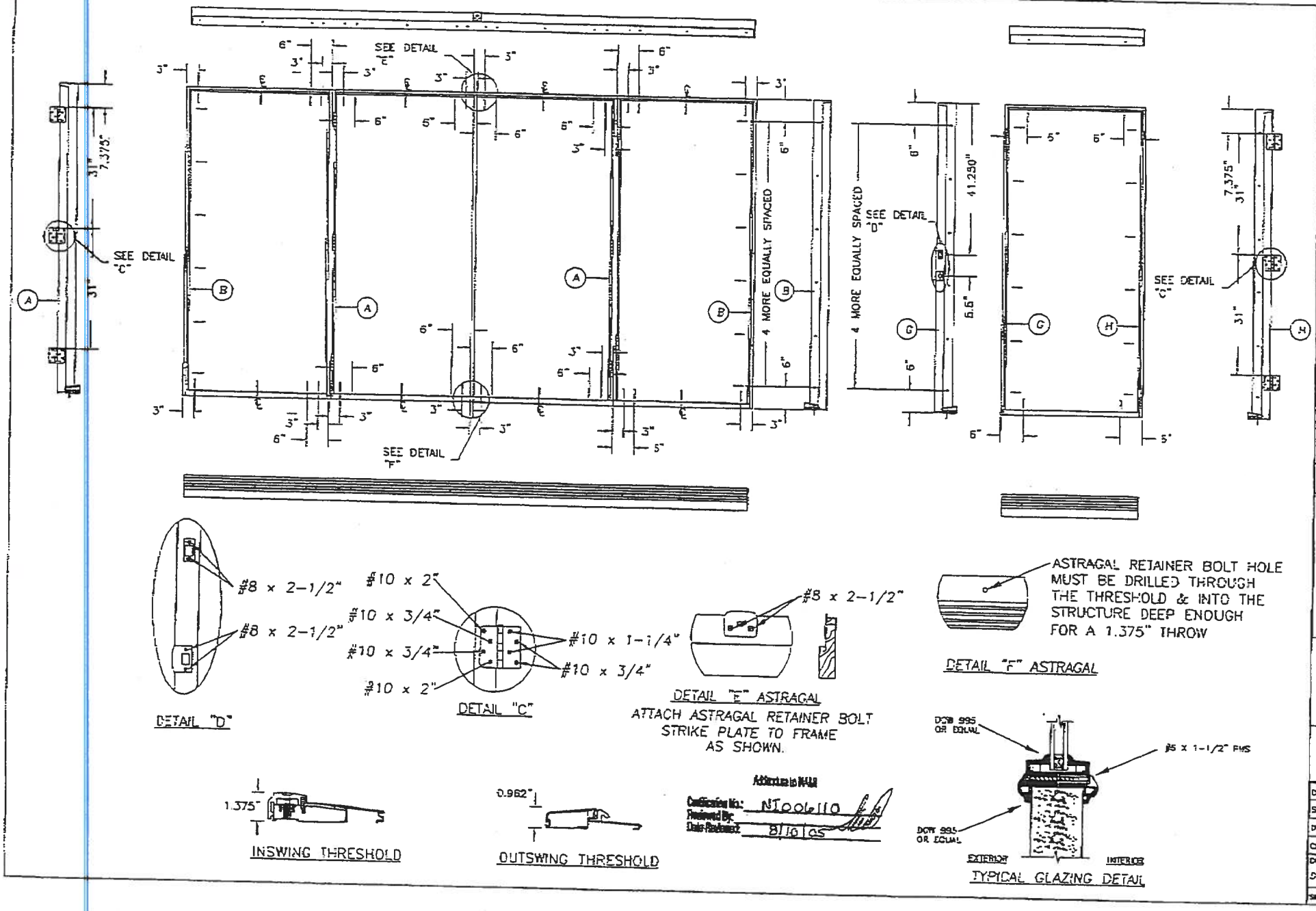

MASONITE INTERNATIONAL CORP.
7300 REAMES RD.
CHARLOTTE, NC 28216

PRODUCT: "EXTERIOR DOOR PRODUCT" DOUBLE 6'-8" GLAZED WOOD-EDGE STEEL DOOR

PART OR ASSEMBLY: ANCHORING LOCATIONS & DETAILS

NO.	DATE	BY

DATE: 7/13/05
SCALE: N.T.S.
DWG. BY: SWS
CHK. BY:
DRAWING NO.: DWG-MA-PL0130-0
SHEET 2 OF 3

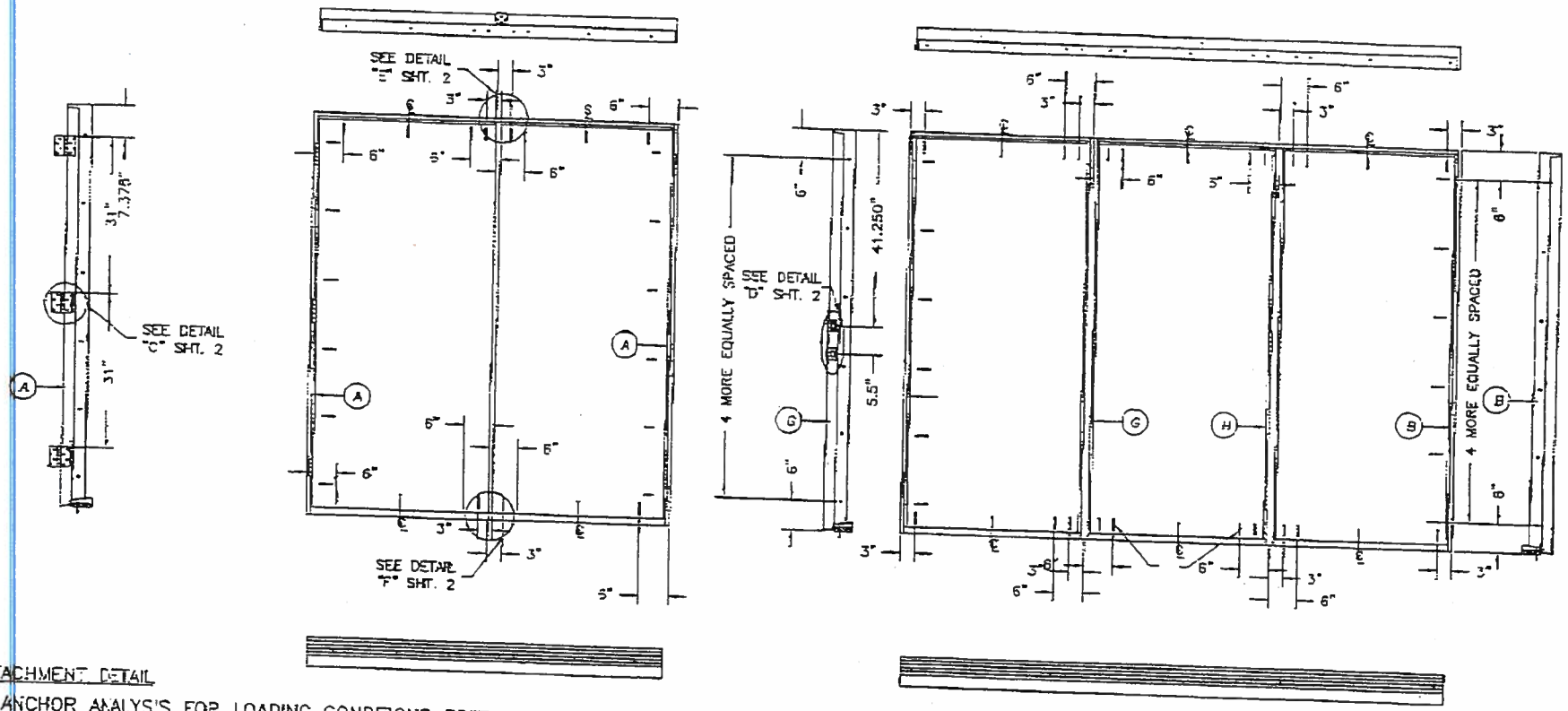

ATTACHMENT DETAIL

1. ANCHOR ANALYSIS FOR LOADING CONDITIONS PREPARED, SIGNED AND SEALED BY HAROLD E. RUPP, PE (FLORIDA #15935) WITH THE LOWEST (LEAST) FASTENER RATING FROM THE DIFFERENT FASTENERS BEING CONSIDERED FOR USE. JAMB, HEAD, AND THRESHOLD FASTENERS ANALYZED FOR THIS UNIT INCLUDE #10 WOOD SCREWS OR 3/16" TAPCONS. A PHYSICAL SHIM MUST BE PLACED IN SHIM SPACE AT EACH ANCHOR LOCATION.
2. THE WOOD SCREW SINGLE SHEAR DESIGN VALUES COME FROM ANSI/AF&PA NDA FOR SOUTHERN PINE LUMBER AND ACHEIVEMENT OF 1-1/2" MINIMUM EMBEDMENT. THE TAPCON MUST ACHIEVE MINIMUM EMBEDMENT OF 1-1/4".
3. WOOD BUCKS BY OTHERS MUST BE ANCHORED PROPERLY TO TRANSFER LOADS TO STRUCTURE.
4. MINIMUM DESIGN VALUE STRENGTH OF ANCHORS 171 LBS.

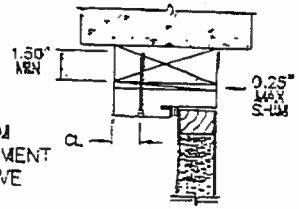

TYPICAL ANCHOR INSTALLATION

HARDWARE SCHEDULE

1.	KWIKSET OR SCHLEGE ANSI/BHMA GRADE 3 OR BETTER CYLINDRICAL AND DEADLOCK HARDWARE TO BE INSTALLED AT 5-1/2" CENTERLINE.
2.	4" X 4" FULL MORTISE BUTT HINGES

Addendum to NOA
Coordinating No.: NT006-110
Reviewed By:
Date Reviewed: 8/10/05

MASONITE INTERNATIONAL CORP.
7300 REAMES RD.
CHARLOTTE, NC 28216

PRODUCT: "EXTERIOR DOOR PRODUCT" 6'-8" WOOD-EDGE STEEL GLAZED DOUBLE DOOR UNIT
PART OR ASSEMBLY: ANCHORING LOCATIONS

NO.	DATE	BY

DATE: 7/11/05
SCALE: N.T.S.
DWN. BY: SWS
CHK. BY:
DRAWING NO.: DWG-NA-FL013D-0
SHEET 3 OF 3

NOTES:

1. DESIGN AND TESTED IN ACCORDANCE WITH FLORIDA BUILDING CODE, INTERNATIONAL BUILDING CODE, AND INTERNATIONAL RESIDENTIAL CODE.
2. FOUR SECTION 7' TALL DOOR SHOWN. 6' DOORS HAVE 3 SECTIONS. SECTION HEIGHTS OF 20.88, 19.00 AND 16.75 ARE AVAILABLE AND MAY BE USED IN COMBINATION TO ACHIEVE VARIOUS DOOR HEIGHTS. DOORS WITH MORE THAN FOUR SECTIONS WITH SAME STRUTTING CONFIGURATION MAINTAIN SPECIFIED WINDLOAD RATING.
3. EMBOSSMENT PATTERN OF 14.3 X 20.4 SHOWN. ALTERNATE PATTERNS OF 12.5 X 43.4 AND 12.5 X 20.4 MAY BE USED.
4. ▷ WINDMATIC COUNTERBALANCE SHOWN. SEE SHEET 3 FOR TORSION COUNTERBALANCE OPTION.
5. ▷ USE THIS BRACKET 405984-0002 ON 8' HIGH DOORS ONLY.
6. ▷ LOCATE 410850 STRUTS AS SHOWN. VERTICAL PLACEMENT CAN VARY PLUS/MINUS 3 INCHES.
7. USE 803911-0001 AS POINT SCREWS FOR ALL COMPONENT INSTALLATION UNLESS OTHERWISE NOTED.
8. ▷ JAMB DETAIL TO BE IN ACCORDANCE WITH DRAWING 409783. JAMB/SCAB BRACKET ATTACHING HARDWARE SHALL BE AS FOLLOWS: 405974-0001 SCREW, LAG 5/16 X 1-3/4 – WOOD JAMB 80MM LOCK BOLT, 3/16 X 1-1/2 EMBEDMENT – CONCRETE BLOCK

▷ WINDOW INSTALLATION ALLOWED. WINDOWS MUST BE INSTALLED IN TOP SECTION.

▷ 061161-0001 ROLLER ASSY'S CAN BE USED IN PLACE OF 061166-0002 ROLLER ASSY'S AND MAINTAIN SPECIFIED WINDLOAD RATING.

OHD/GENIE DOOR EQUIVALENCY CHART		
OHD DOOR SERIES No.	GENIE DOOR SERIES No.	RAW STEEL THICKNESS
SERIES 188	SERIES GDS300	24 GA
SERIES 189	SERIES GDS300	24 GA
SERIES 281	SERIES GDS200	25 GA
SERIES 381	SERIES GDS350	25 GA

APPROVED PRESSURE RATING CHART			
DOOR WIDTH	8'	7'	6'
DESIGN PRESSURE	24.8	28.3	33
TEST PRESSURE	37.1	42.4	49.5
JAMB LOAD LBS/FT	82	91	93

REVISIONS				
1128	0	REVISE PER ECN	11/02/01	[illegible]
1173	2	REVISE PER ECN	12/04/01	[illegible]
1184	1	REVISE PER ECN	12-21-01	[illegible]

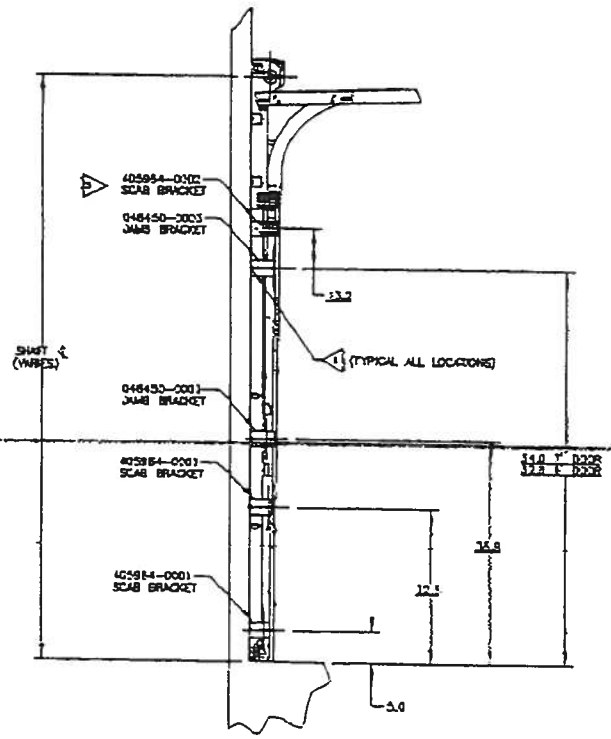

STD TRACK DETAIL
FOR 9' WIDE DOOR

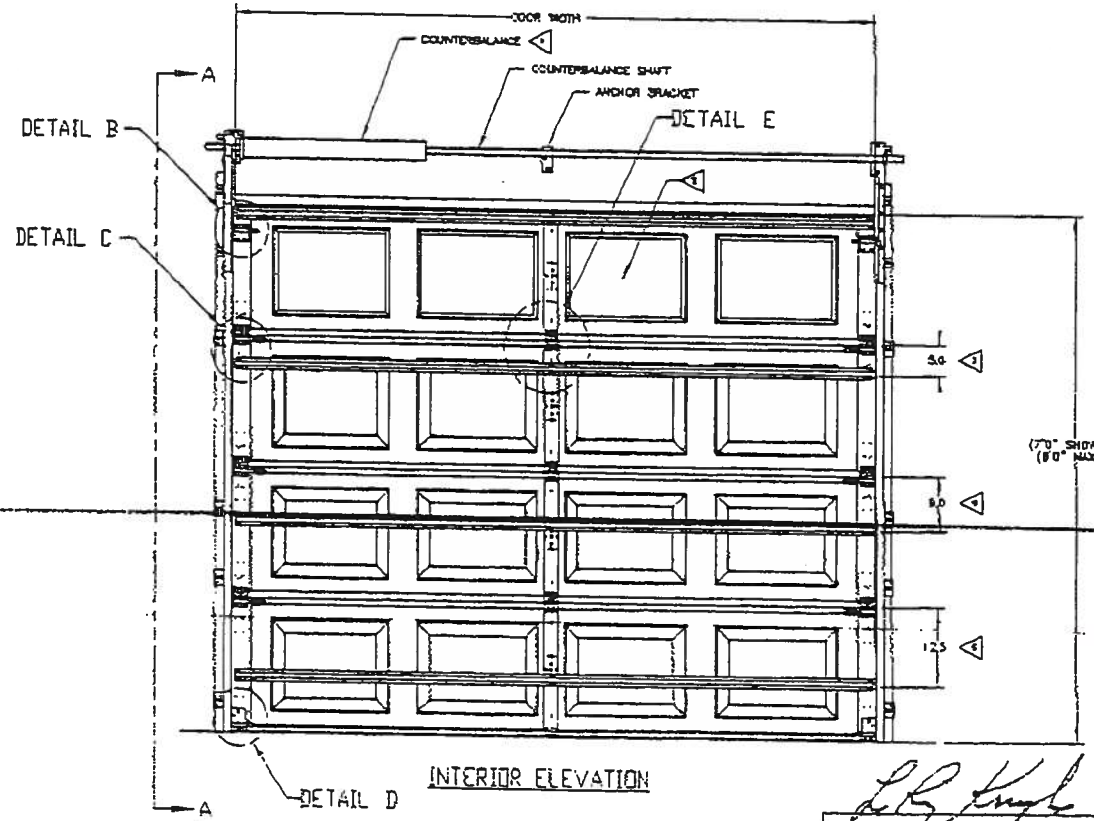

INTERIOR ELEVATION

FL4861

L.R. Knight
7-18-05

DOOR WIDTH	CENTER STILE	END STILE	RLR SHAFT BRACKET	STRUTS/SECT	ROLLER	VERT TRK GA	JAMB LOAD LBS/FT
8'	1	SINGLE	YES	HS-1 HS-2	STD. 2.25/16"	.049"	82

THE DRAWINGS AND ALL OTHER INFORMATION CONTAINED HEREIN ARE THE CONFIDENTIAL AND PROPRIETARY PROPERTY OF OVERHEAD DOOR CORPORATION AND ITS AFFILIATED COMPANIES. THIS DRAWING AND INFORMATION, IN WHOLE OR IN PART, MAY NOT BE COPIED OR NOT SHARED OR DISCLOSED TO ANYONE WITHOUT THE PRIOR WRITTEN CONSENT OF OVERHEAD DOOR CORPORATION. NO DISCLOSURE OF ANY OF THIS DRAWING OR INFORMATION IS INTENDED TO CONVEY AN LICENSE OR AUTHORIZATION TO USE IT FOR ANY PURPOSE WITHOUT THE SPECIFIC WRITTEN CONSENT OF OVERHEAD DOOR CORPORATION.

				WHOLE NUMBERS ± .25	FINISH N/A		
				.X ± .1			
				.XX ± .03			
				.XXX ± .010	UNIT OF MEASURE	MATERIAL N/A	
				ANGLES ± 1°			
				MASS ±	SA		
207 DATE	RESIDUAL USED ON						

DRAWN BY	RK HOOPER	07/30/01
CHECKED BY	M WONGER	07/30/01
APPROVED BY	RK HOOPER	07/30/01

DRAWING TITLE: WINDLOAD 185/281/381, 22/35 PSF, 7'-4" MAX

DRAWING NUMBER: D-409837

SHEET 1 OF 2

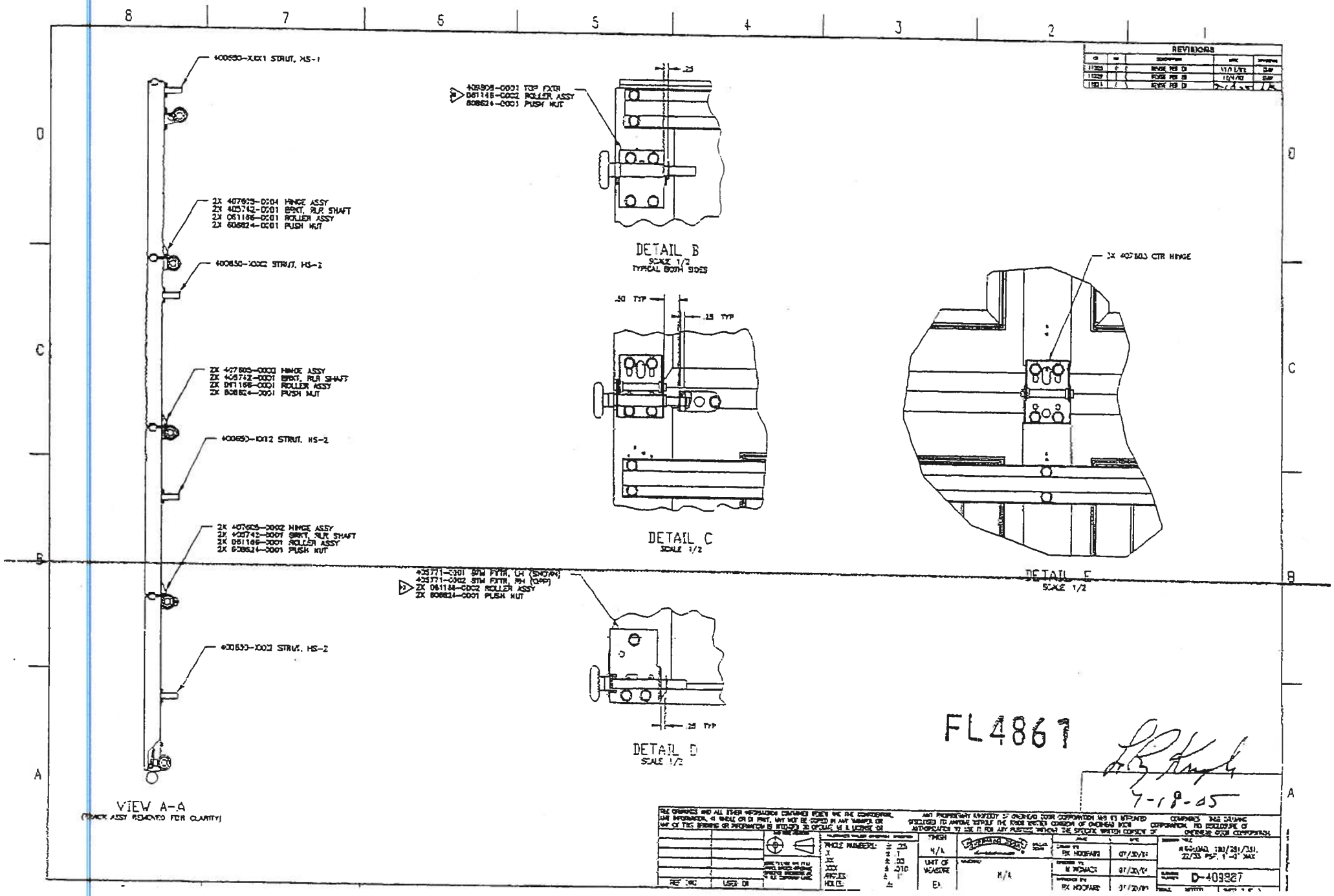
400550-X001 STRUT, HS-1
2X 407605-0001 HINGE ASSY
2X 405742-0001 BRKT, RLR SHAFT
2X 061186-0001 ROLLER ASSY
2X 608824-0001 PUSH NUT
400650-X002 STRUT, HS-2
400650-X002 STRUT, HS-2
2X 407605-0002 HINGE ASSY
2X 405742-0001 BRKT, RLR SHAFT
2X 061186-0001 ROLLER ASSY
2X 608824-0001 PUSH NUT
VIEW A-A
(TRACK ASSY REMOVED FOR CLARITY)
DETAIL B
SCALE 1/2
TYPICAL BOTH SIDES
DETAIL C
SCALE 1/2
2X 407603 CTR HINGE
DETAIL E
SCALE 1/2
2X 061186-0002 ROLLER ASSY
2X 608824-0001 PUSH NUT
400650-X002 STRUT, HS-2
DETAIL D
SCALE 1/2
REVISIONS
FL4861
7-18-05
D-409827

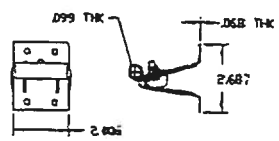

409303-0001 TOP FIXTURE

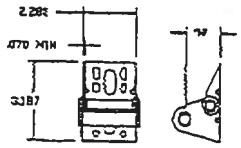

407605-XXXX END HINGE

P/N	"H"
407605-0002	.85
407605-0003	1.10
407605-0004	1.35
407605-0005	1.60

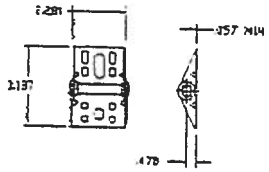

407603-0001 CENTER HINGE

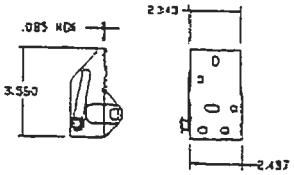

405771-XXXX BOTTOM FIXTURE

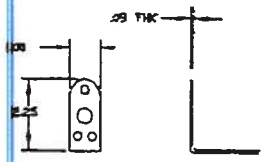

405742-0001 BRACKET, ROLLER SHAFT

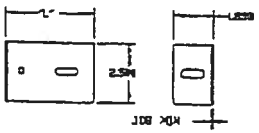

046450-0003 JAMB BRACKET
405964-0001 SCAB BRACKET

P/N	"L"
046450-0002	4.03
405964-0001	3.25

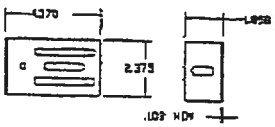

405964-0002 SCAB BRACKET

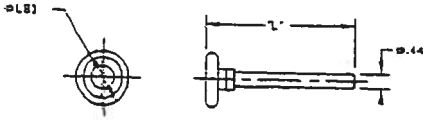

061166-003X ROLLER ASSEMBLY, TR-3

P/N	"L"
-0001	7.56
-0002	3.10

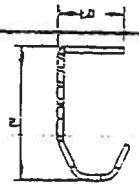

407743-XXX1 2' TRACK

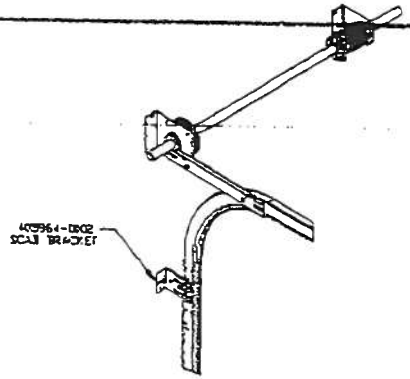

TORSION COUNTERBALANCE OPTION

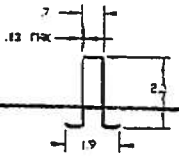

400650-XXX1 STRUT, HS-1

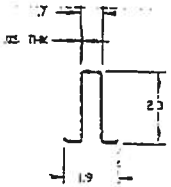

400650-XXX2 STRUT, HS-2

FL4861

7-18-05

REV	DATE	DESCRIPTION	BY
0000	3	REVISE PER EN	DRW
1029	0	REVISE PER EN	DRW
1024	1	REVISE PER EN	DRW

D-409867

NOTES:

1. DESIGN AND TESTED IN ACCORDANCE WITH FLORIDA BUILDING CODE, INTERNATIONAL BUILDING CODE, AND INTERNATIONAL RESIDENTIAL CODE
2. FOUR SECTION 7' TALL DOOR SHOWN. 8' DOORS HAVE 5 SECTIONS. SECTION HEIGHTS OF 21.88, 19.63 AND 16.75 ARE AVAILABLE AND MAY BE USED IN COMBINATION TO ACHIEVE VARIOUS DOOR HEIGHTS. DOORS WITH MORE THAN FOUR SECTIONS WITH SAME STRUTTING CONFIGURATION MAINTAIN SPECIFIED WINDLOAD RATING
3. EMBOSSMENT PATTERN OF 14.3 X 20.4 SHOWN. ALTERNATE PATTERNS OF 12.5 X 43.4 AND 12.5 X 20.4 MAY BE USED
4. ARMORITE COUNTERBALANCE SHOWN. SEE SHEET 3 FOR TORSION COUNTERBALANCE OPTION
5. USE THIS BRACKET 405964-0002 ON 8' HIGH DOORS ONLY.
6. LOCATE 405917 CHANNELS AT SHOWN. VERTICAL PLACEMENT CAN VARY PLUS/MINUS 3 INCHES
7. ON THE MIDDLE CENTER STILE THERE IS NO TOOL CLEARANCE HOLE FOR THE UPPER 603931-0001 SCREW. INSTALL FROM BELOW.
8. USE 805911-1000 AB POINT SCREWS FOR ALL COMPONENT INSTALLATION UNLESS OTHERWISE NOTED.
9. JAMB DETAIL TO BE IN ACCORDANCE WITH DRAWING 409283. JAMB/SCAB BRACKET ATTACHING HARDWARE SHALL BE AS FOLLOWS 603974-0001 SCREW, LAG 3/38 x 1-3/4 - WOOD JAMB BAVIL LOCK BOLT, 5/16 X 1-1/2 EMBEDMENT - CONCRETE BLOCK
10. WINDOW INSTALLATION ALLOWED. WINDOWS MUST BE INSTALLED IN TOP SECTION.
11. EXTRA CENTER STILES ARE NOT REQUIRED ON DOORS WITHOUT A WINDOW SECTION.
12. USE 16 GAUGE CHANNEL

APPROVED PRESSURE RATING CHART				
DOOR WIDTH	12'	10'	9'	8'
DESIGN PRESSURE	29	35	39	44
TEST PRESSURE	43.5	52.5	58.5	66
JAMB LOAD LBS/FT	174	175	175	176

OHD/GENIE DOOR EQUIVALENCY CHART		
OHD DOOR SERIES No.	GENIE DOOR SERIES No.	PAN STEEL THICKNESS
SERIES 188	SERIES G05300	24 GA
SERIES 189	SERIES G05300	24 GA
SERIES 280	SERIES G05200	22 GA
SERIES 290	SERIES G05250	22 GA

REVISIONS				
NO	REV	DESCRIPTION	DATE	APPROVED
3RDM	1	REVISE PER ECN	9/14/05	RM
3RDM	2	REVISE PER ECN	3/03/06	RM
3RDM	3	REVISE PER ECN	6/3/06	LE

FL4861

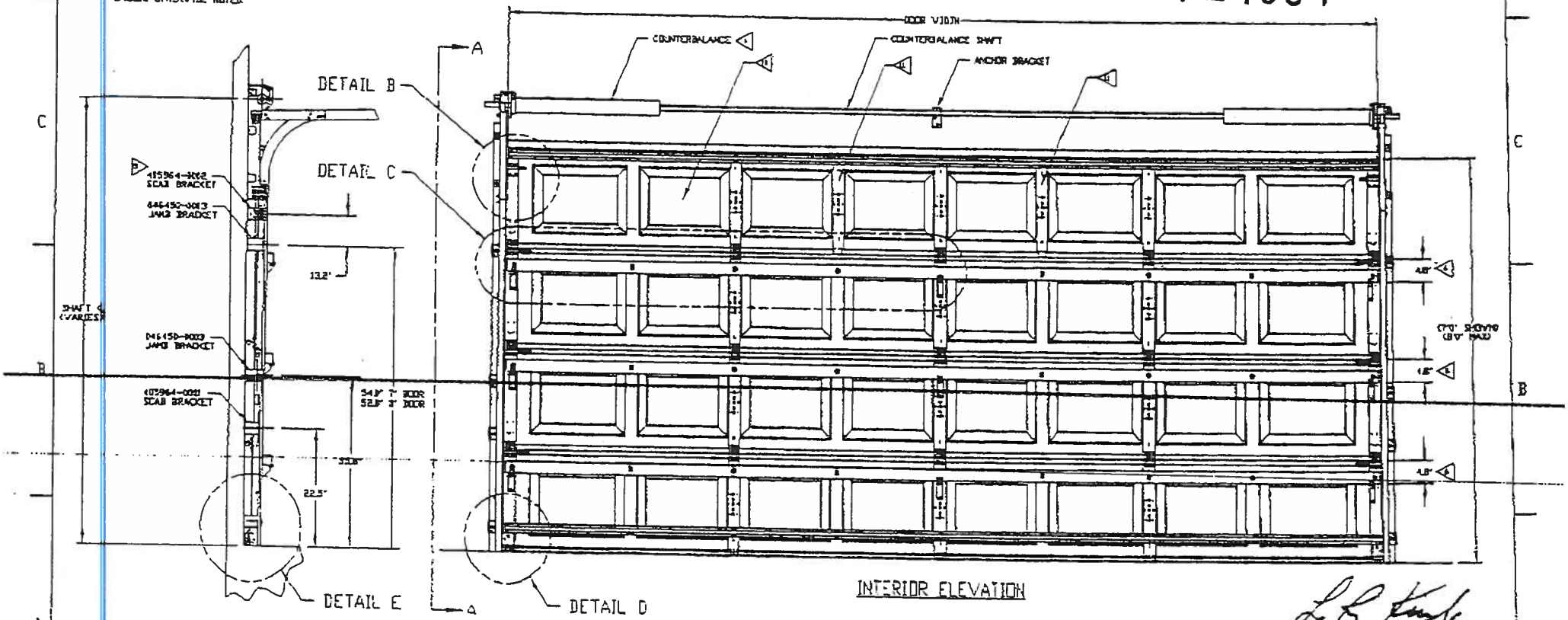

INTERIOR ELEVATION

STD TRACK DETAIL
FOR 16' WIDE DOOR

7-18-05

DESIGN PRESSURE (PSF)	TEST PRESSURE (PSF)	DOOR WIDTH	CENTER STILE	END STILE	RLR SHAFT BRACKET	STRUTS/SECT	ROLLER	VERT TRK GA	JAMB LOAD (LB/FT-HT)
22	33	16'	3	SINGLE	YES	4" x 2.5" CH XS-2	STL 2"x7/16"	14.5"	176

THE DRAWINGS AND ALL OTHER INFORMATION CONTAINED HEREON ARE THE CONFIDENTIAL AND PROPRIETARY PROPERTY OF OVERHEAD DOOR CORPORATION AND ITS AFFILIATED COMPANIES. THESE DRAWINGS AND INFORMATION, IN WHOLE OR IN PART, MAY NOT BE COPIED IN ANY MANNER OR DISCLOSED TO ANYONE WITHOUT THE PRIOR WRITTEN CONSENT OF OVERHEAD DOOR CORPORATION. NO DISCLOSURE OF ANY OF THIS DRAWING OR INFORMATION IS INTENDED BY DELIVERY AS A LICENSE OR AUTHORIZATION TO USE IT FOR ANY PURPOSE WITHOUT THE PRIOR WRITTEN CONSENT OF OVERHEAD DOOR CORPORATION.

RESIDENTIAL
USCS - EM

UNLESS NOTED OTHERWISE DIMENSIONS ARE IN INCHES

WHOLE NUMBERS: ± .25
.X ± .1
.XX ± .03
.XXX ± .01
ANGLES ± 1°
HOLES ± .1

FINISH: N/A
UNIT OF MEASURE: IN
SCALE: 1/4

DRAWN BY: RK 10/07/03
DESIGNED BY: M. VOBACK 07/30/03
APPROVED BY: RK 10/07/03

DRAWING TITLE: WINDLOAD, 300/281/281, 22/33 PSF, 16'-4" MAX

DRAWING NUMBER: D-409884

SHEET 1/12 (MODEL 1 OF 1)

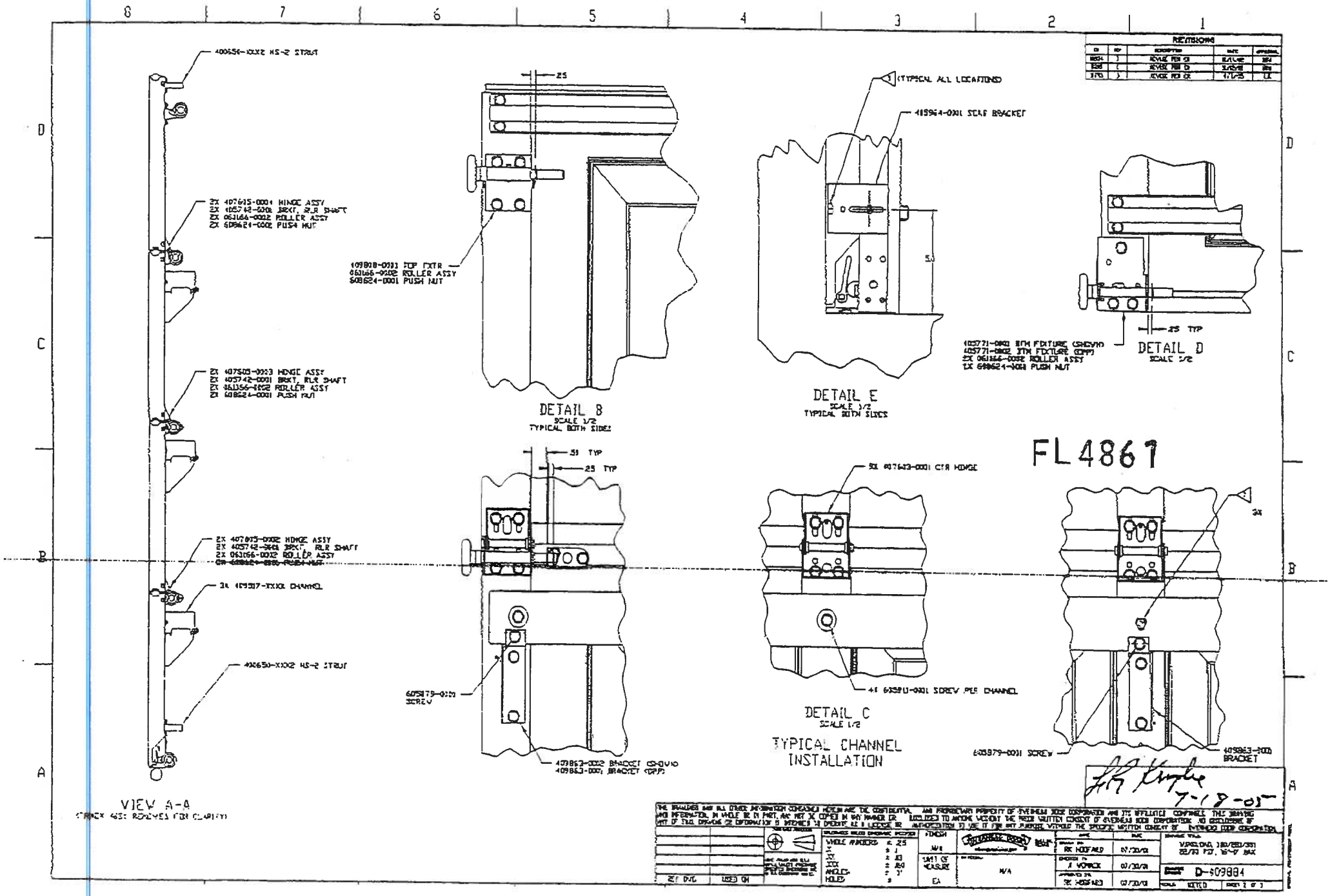
FL4861
VIEW A-A
DETAIL B
DETAIL E
DETAIL D
DETAIL C
TYPICAL CHANNEL INSTALLATION
REVISIONS
D-009884

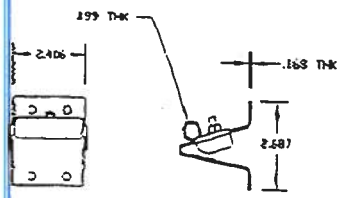

409808-0001 TOP FIXTURE

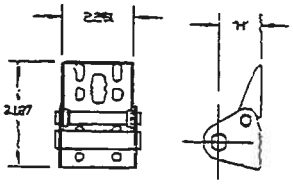

407605-XXXX END HINGE

P/N	'H'
407605-0042	.85
407605-0043	1.10
407605-0044	1.35
407605-0045	1.60

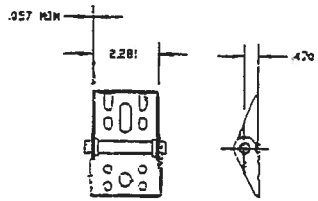

407602-0001 CENTER HINGE

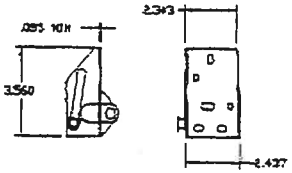

405771-XXXX BOT. FIXTURE

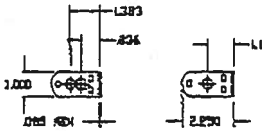

405742-0001, BRACKET, ROLLER SHAFT

FL4861

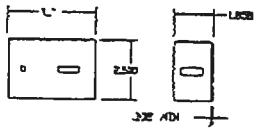

405964 & 046450, BRACKET, SCAB

PART NUMBER	'L'
405964-1082	3.53
046450-1083	4.03

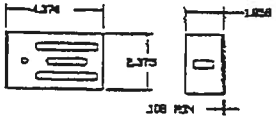

405964-0002, BRACKET, SCAB JOINT

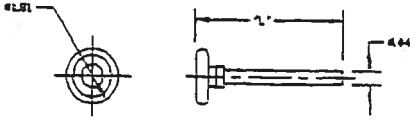

061166-XXXX ROLLER ASSEMBLY, TR-3

P/N	'L'
-0001	7.56
-0002	5.13

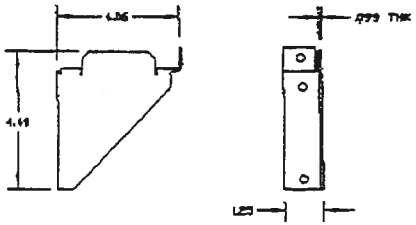

409863-XXXX CHANNEL SUPPORT

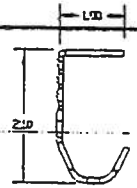

407743-XXXX 2' TRACK

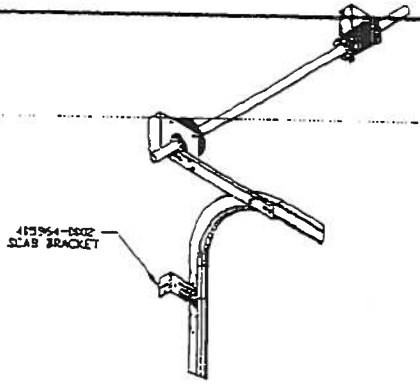

TORSION COUNTERBALANCE OPTION

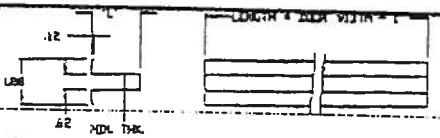

409650-XXXX, ROLLED HS STRUT

ROLLED HS STRUT CHART			
PART NUMBER	NOM. THK.	STRUT	DIM 'L'
409650-XXX2	.052	HS-2	2.25

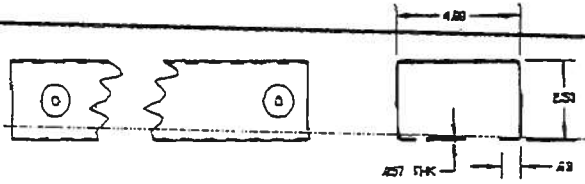

409517-XXXX CHANNEL

7-13-01

THE DRAWINGS AND ALL OTHER INFORMATION CONTAINED HEREIN ARE THE CONFIDENTIAL AND PROPRIETARY PROPERTY OF INTERCAR SOBI CORPORATION AND ITS AFFILIATES. COPIES OF THIS DRAWING AND INFORMATION, IN WHOLE OR IN PART, MAY NOT BE COPIED IN ANY MANNER OR DISCLOSED TO ANYONE WITHOUT THE PRIOR WRITTEN CONSENT OF INTERCAR SOBI CORPORATION. NO DISCLOSURE OF PART OF THIS DRAWING OR INFORMATION IS INTENDED TO OPERATE AS A LICENSE OR AUTHORIZATION TO USE IT FOR ANY PURPOSE WITHOUT THE SPECIFIC WRITTEN CONSENT OF INTERCAR SOBI CORPORATION.

REF DWG	USED ON

UNLESS NOTED OTHERWISE REMOVE ALL BURRS AND SHARP EDGES. DEBURR AND BREAK EDGES .01 TO .03 MAX.

UNLESS NOTED OTHERWISE	
WHOLE NUMBERS	± .25
.X	± .1
.XX	± .03
.XXX	± .010
ANGLES	± 1°
HOLES	±

FINISH: N/A

UNIT OF MEASURE: EA

MATERIAL: N/A

DRAWN BY	RK HOFFARD	07/30/01
CHECKED BY	M WOHLICK	10/26/01
APPROVED BY	RK HOFFARD	01/31/01

DRAWING TITLE: VIBROLONG 180/201/301, 20/33 FT., 15'-4" WIDE

DRAWING NUMBER: D-409884

NOTES

1. ALL LOADS FROM THE DOOR ARE TRANSFERRED TO THE VERTICAL JAMBS THROUGH THE TRACK (SPF STUD GRADE OR BETTER). NO LOAD FROM THE DOOR IS TRANSFERRED TO THE HORIZONTAL (TOP) JAMB WITH "STRUT ONLY" WINDLOAD DESIGNS. FOR DOORS UTILIZING A VERTICAL WINDLOAD POST, PART OF THE FORCE IS TRANSFERRED TO THE HORIZONTAL GARAGE DOOR HEADER.
2. EACH VERTICAL JAMB SEES A MAXIMUM DESIGN LOAD OF +2983 LB & -2989 LB AND A MAXIMUM TEST LOAD OF +4420 LB & -4480 LB (STANDARD 8' HIGH DOOR). THE HORIZONTAL GARAGE DOOR HEADER SEES A MAX TEST LOAD OF 14044 FOR SINGLE POST INSTALLATIONS AND A MAX COMBINED TEST LOAD OF 4320# FOR MULTIPLE POSTS.
3. ALL JAMB FASTENERS MAY BE (BUT NOT REQUIRED) COUNTERSUNK TO PROVIDE A FLUSH MOUNTING SURFACE.
4. JAMB BRACKETS AND SCAB BRACKETS SHALL BE INSTALLED WITH 5/16" X 1-3/4" LAG SCREWS (ASTM A307, GRADE A) - DIRECTLY TO THE JAMB. SHEETROCK OR OTHER WALL COVERINGS MUST BE REMOVED PRIOR TO INSTALLATION OF THE JAMB BRACKETS AND SCAB BRACKETS. QUANTITY AND LOCATION ARE PRESENTED ON APPLICABLE WINDLOAD DOOR DRAWING.
5. SPRING ANCHOR BRACKETS SHALL BE INSTALLED WITH 5/16" X 2-1/2" LAG SCREWS (ASTM A307, GRADE A). HEADER BRACKETS SHALL BE INSTALLED WITH 5/16" X 1-3/4" LAG SCREWS (ASTM A307, GRADE A).
6. FOR BLOCK OR CONCRETE WALL CONSTRUCTION JAMB AND HEADER BRACKETS MAY BE MOUNTED DIRECTLY TO WALL CONSTRUCTION.

REVISIONS

LETTER	DESCRIPTION	DATE	INITIAL
B	REV PER EN 11388	02/21/01	MAY
C	REV PER EN 11388	4/20/01	JDF
D	REV PER EN 11443	7/3/01	JDF

FL4871

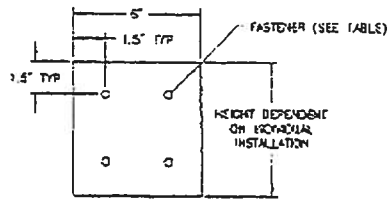

SPRING ANCHOR BRACKET PAD DETAIL

OPENING REQUIREMENTS

WOOD FRAME BUILDINGS

STUD WALLS OF DOOR OPENING SHALL BE FRAMED SOLID BY NOT LESS THAN 2 FULL LENGTH STUDS AND 2 HEADERSTUDS USING SPF STUD GRADE OR BETTER WOOD.
STUD WALLS TO BE CONTINUOUS FROM FOOTING TO TIE BEAMS AND IN ACCORDANCE WITH FBC CHAPTER 23.
INSTALLATION IN ACCORDANCE WITH DWG #409783 IS AN ACCEPTABLE ALTERNATIVE.

BLOCK WALL OR CONCRETE

2X6 MIN. WOOD JAMB and 2x8 MIN. WOOD HEADERSTUD SHALL BE ANCHORED TO GROUT REINFORCED BLOCK WALL OR CONCRETE COLUMN. BLOCK WALL CELLS SHALL BE FILLED WITH CONCRETE AND REINFORCED WITH #4 BAR EXTENDING INTO THE FOOTING AND INTO THE BEAMS. (STRENGTH IS ASSUMED TO BE 2500 PSI). ALL BARS SHALL BE CONTINUOUS FROM THE TIE BEAMS TO THE FOOTING FOR BLOCK WALL OR CONCRETE COLUMN. BLOCK WALLS AND CONCRETE COLUMNS TO BE DESIGNED BY A BUILDING PROFESSIONAL OF RECORD AND IN ACCORDANCE WITH FBC CHAPTER 21.

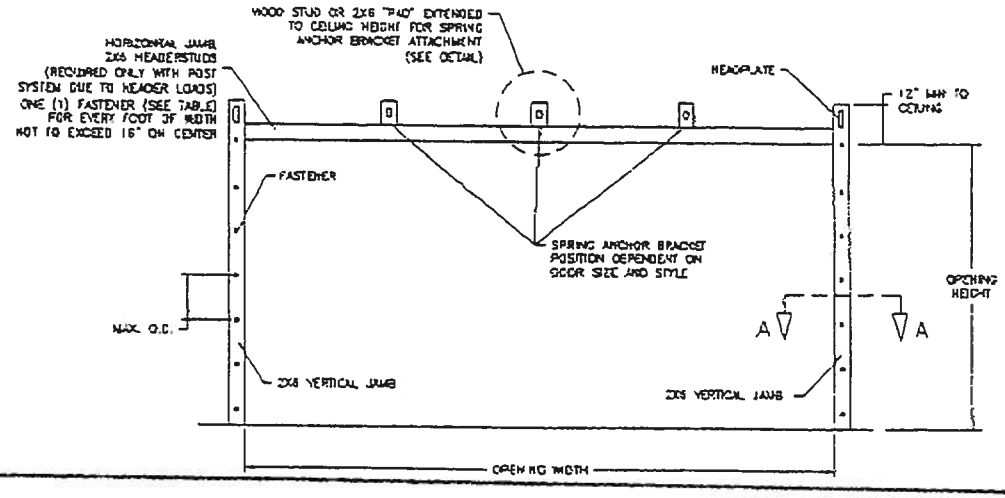

JAMB REQUIREMENTS

2X6 JAMB TO SUPPORTING STRUCTURE ATTACHMENT

(NOT TO BE USED FOR ATTACHMENT OF TRACK BRACKETS TO 2X6 VERTICAL JAMBS OR SUPPORTING STRUCTURE).

BUILDING TYPE	FASTENER TYPE	MIN. NO. OF FASTENERS PER VERTICAL JAMB		MAXIMUM ON CENTER DISTANCE BETWEEN FASTENERS	STEEL WASHERS REQUIRED?	USE FOR SPRING ANCHOR BRACKET OR POST PAD?
		7' HIGH	8' HIGH			
WOOD FRAME (SPF)	5/16" X 3" LAG SCREW (ASTM A307, GRADE A), 1-5/8" MIN. EMBED.	10	12	12"	YES	YES
C-90 BLOCK (2,500 PSI GROUT)	1/4" x 4" ITW TAPCON CONCRETE ANCHOR, 1-3/4" MIN. EMBED.*	7	8	16"	YES	YES
C-90 BLOCK (2,500 PSI GROUT)	3/8" X 4" RAWL LOK/BOLT ANCHOR BOLT, 1-5/8" MIN. EMBED.*	7	8	16"	NO	YES
CONCRETE COLUMN (2,500 PSI)	3/8" X 4" RAWL LOK/BOLT ANCHOR BOLT, 1-5/8" MIN. EMBED.*	7	8	16"	NO	YES
2000 PSI CONCRETE	1/4" J-BOLT	12	14	12"	YES	YES
2000 PSI CONCRETE	3/16" J-BOLT	10	12	12"	YES	YES
2000 PSI CONCRETE	5/8" J-BOLT	7	8	16"	YES	YES

* - TAPCONS/ANCHOR BOLTS CAN BE INSTALLED DIRECTLY THROUGH TRACK BRACKETS/ANGLE IN LIEU OF 5/16" X 1-5/8" LAG SCREWS.
RAWL LOK/BOLT SHALL BE TORQUED AS SPECIFIED BY THE RAWL DRILLING AND ANCHORING SYSTEMS DESIGN MANUAL.

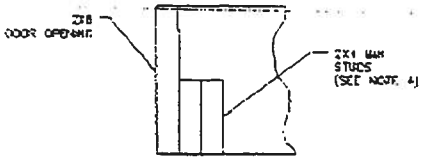

SECTION A-A
(ALTERNATE JAMB CONSTRUCTION FOR WOOD FRAME JAMBS)

7-18-05

DRAWN BY HK HOGGARD	DATE 10/13/00	JAMB DETAIL RESIDENTIAL	
CHECKED BY G. FINERAN	DATE 10/23/00	DRAWING NUMBER D- 409783	

RESIDENTIAL FRAMING AND WIRING SPECIFICATIONS.

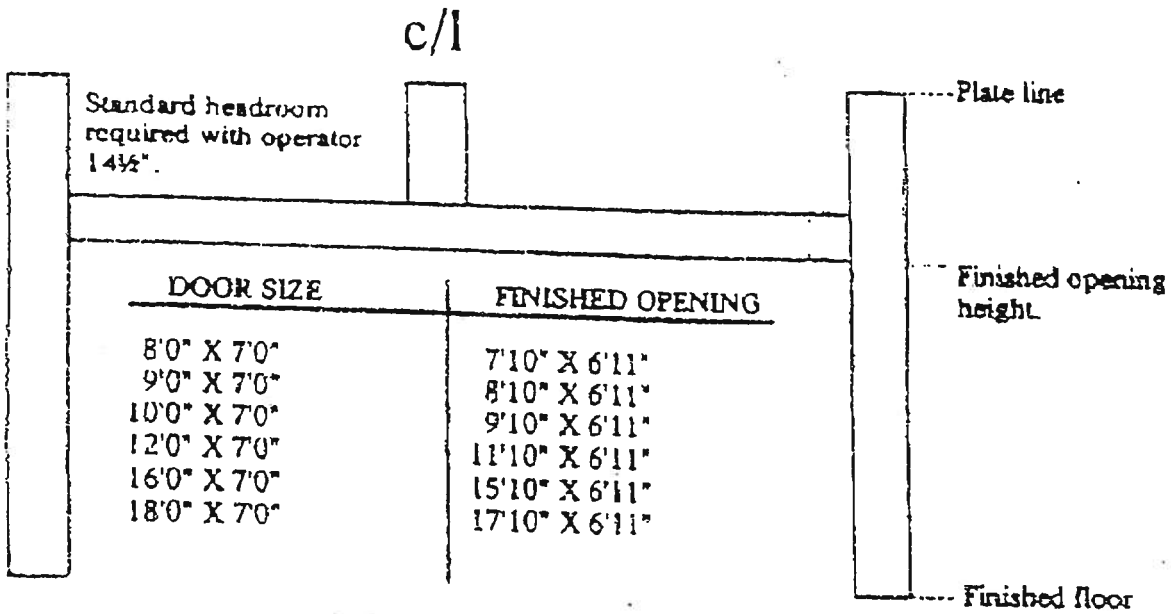

DOOR SIZE	FINISHED OPENING
8'0" X 7'0"	7'10" X 6'11"
9'0" X 7'0"	8'10" X 6'11"
10'0" X 7'0"	9'10" X 6'11"
12'0" X 7'0"	11'10" X 6'11"
16'0" X 7'0"	15'10" X 6'11"
18'0" X 7'0"	17'10" X 6'11"

NOTE: Finished opening width to be 2" less than door width.
Finished opening height to be 1" less than door height.
All bucks and spring pad to be minimum 2 X 6 PT.

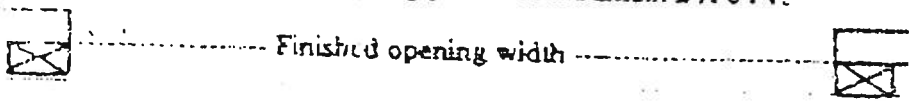

ELECTRIC OPERATOR PRE-WIRE INSTRUCTIONS.

115 VAC receptacle located on center line of door opening, 11'0" back from opening.
12'0" back from opening for 8'0" high doors.

All low voltage wire to be 2 conductor, 22ga.
Photo-Cell wiring:
Each side of door opening at 12" AFF. Leave 12" lead wire. Return to ceiling receptical with lead wire length to 7'0" AFF.
Wall console wiring:
Locate at owner/builder direction: Return to ceiling receptical with lead wire length to 7'0" AFF.

- Series 165/3000 Single Hung and Fixed Windows
- Series 740/744/3740 Single Hung and Fixed Windows
- Series 168/3168 Horizontal Slider and Fixed Windows
- Series 680 Horizontal Slider and Fixed Windows

NOTE: SEE INDIVIDUAL TEST REPORT(S) FOR DP RATINGS AND MAXIMUM ALLOWABLE SIZES.

INSTALLATION INSTRUCTIONS FOR "APPROVED FOR FLORIDA" ALUMINUM FIN WINDOWS

BetterBilt Windows & Doors appreciates your recent purchase of a maintenance free prime window, which will not rust, rot, mildew, or warp. This is a quality product that left our factory in good condition – proper handling and installation are just as important as good design and workmanship. Please follow these recommendations to allow this product to complete its function.

1. Handle units one at a time in the closed and locked position and take care not to scratch frame or glass or to bend the nailing fin. Place a continuous bead of caulk on the back side of nail fin (mounting flange).
2. Set unit plumb and square into opening and make sure that there is 3/16" ± 1/16" clearance around the frame. Fasten unit into opening in the closed and locked position, making sure that fasteners are screwed in straight in order to avoid twisting or bowing of the frame. Make sure that sill is straight and level. Check operation of unit frequently as fasteners are set.
3. Use # 8 sheet metal or wood screws with a minimum of 1" penetration into the framing (stud). Place first screws (two at each corner) 3" from end of fin. For positive and negative DPs (design pressures) up to 35, do not exceed 24" spacing of additional screws. For DPs from 35.1 to 50, do not exceed 18" spacing.
4. Caulk entire perimeter of fin to mounting surface joint and caulk over screw heads.
   Note: this step can be eliminated if 4" wide adhesive type flashing is used (sill 1st., jambs 2nd., head 3rd.).
5. Fill voids between frame and construction with loose batten type insulation or non-expanding aerosol foam specifically formulated for windows and doors to eliminate drafts. The use of expanding aerosol type insulating foam, which can bow the frame, waives all stated warranties.
6. Remove plaster, mortar, paint, and debris that has collected on the unit and make sure that sash/vent tracks and interlocks are also clean. Do not use abrasives, solvents, ammonia, vinegar, alkaline, or acid solutions for clean-up, especially with insulated glass units as their use could cause chemical breakdown of the glass seal. Take care not to scratch glass; scratches severely weaken glass and it could eventually break from thermal expansion and contraction. Clean units with water and mild detergent.

- CAUTION -

BetterBilt Windows & Doors or its representatives are unable to control and cannot assume responsibility for the selection and placement of their products in a building or structure in a manner required by laws, statutes, and/or building codes. The purchaser is solely responsible for knowledge of and adherence to the same. BetterBilt window products are not provided with safety glazing unless specifically ordered with such. Many laws and codes require safety glazing (tempered glass) near doors, bathtubs, and shower enclosures. Also be aware of other code requirements such as emergency egress and structural / energy performance.

Corporate Headquarters:
M.I. Home Products
650 West Market St.
Gratz, PA 17030-0370
(717) 365-3300

www.mihp.com

STEVEN M. URICH
CERTIFICATE
No. 57790
STATE OF FLORIDA
PROFESSIONAL ENGINEER

St 221
July 29, 2003

Rev. 7-24-03

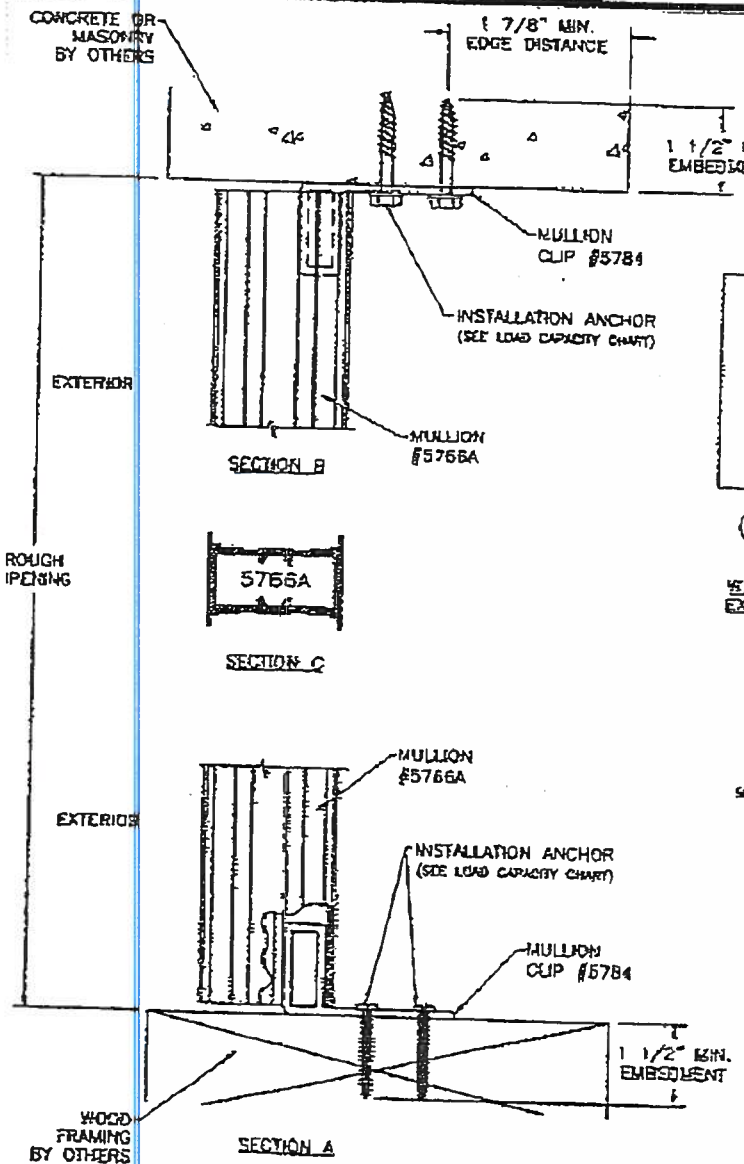

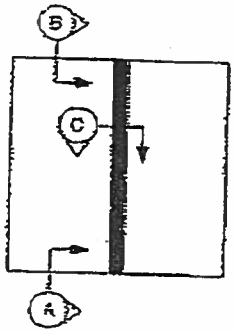

THIN MULLION
W/MULLION #5766A
EXTERIOR ELEVATION

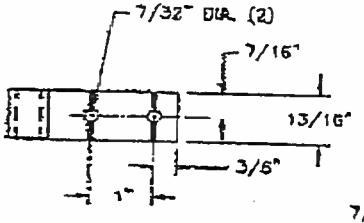

MULLION CLIP #5784
OR #5786
VERSION A
(WOOD SUBSTRATE ONLY)

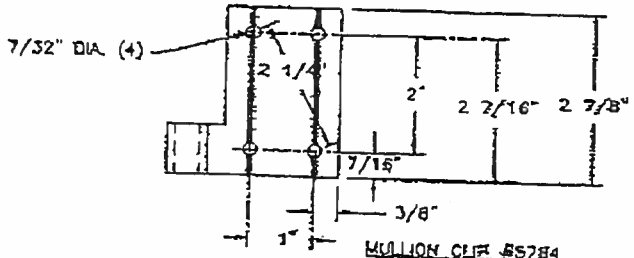

MULLION CLIP #5784
VERSION B

LOAD CAPACITIES OF ANCHORS

DESCRIPTION	PSF
MULLION CLIP #5784	70
(2) #10 SMS W/1.5" MIN. EMBEDMENT	45
(2) #10 SMS W/1.5" MIN. EMBEDMENT	70
(4) #10 SMS W/1.5" MIN. EMBEDMENT	70
(2) 3/16" TAPCONS W/2 1/4" MIN. O.C. SPACING	70

VERTICAL MULLION DESIGN LOAD CAPACITIES CHART
FOR MULLION 5766A

MIN. WIDTH X MULL. SPAN Y	24.000	30.000	36.000	37.000	42.000	48.000	53.125
36.000	70	70	70	70	70	70	70
42.000	70	70	70	70	70	70	70
48.000	70	70	70	70	70	70	70
50.625	70	70	70	70	70	70	70
54.000	70	70	70	70	70	70	70
60.000	70	70	70	70	67	62	60
63.000	70	70	66	65	59	55	52
72.000	70	58	49	46	43	40	37

SECTION SPECIFICATION NOTES

1) CHART APPLIES ONLY TO MULLION 5766A WHEN USED TO MULL SERIES 163, 185, 240, 3000, SIDE & STACK WINDOWS SIDE BY SIDE.
2) HEAD WINDOW WITH AND MULL SPACE OR HIGHER.
3) DESIGN PRESSURE VALUES ON THIS CHART ARE POSITIVE AND NEGATIVE PSF.
4) DESIGN PRESSURE VALUES APPLY TO MULLION WHERE TWO OR MORE WINDOWS ARE USED IN A SINGLE OPENING.
5) REFER TO REPORT # 247 FOR MORE MULL SPECIFICATIONS.

NOTE:

1) THE PRODUCT SHOWN HEREIN IS DESIGNED AND MANUFACTURED TO COMPLY WITH THE 2004 FLORIDA BUILDING CODE, SECTION 1714.5.5.
2) MULLION INSTALLATION DETAILS APPLY TO ALUMINUM TUBE MULLION, ONE NUMBER 5766A, WHEN USED TO MULL WINDOWS SIDE BY SIDE.
3) APPROVED IMPACT PROTECTIVE SYSTEM IS REQUIRED ON THIS PRODUCT IN AREAS REQUIRING IMPACT RESISTANCE.
4) USE 3/16" DIAMETER TAPCON ANCHOR OF SUFFICIENT LENGTH TO ACHIEVE MINIMUM EMBEDMENT OF 1 1/2" INTO MASONRY OR CONCRETE. 3/16" DIAMETER TAPCON MUST HAVE A 1 7/8" MINIMUM EDGE DISTANCE FROM EDGE OF MASONRY OR CONCRETE.
5) USE #10 WOOD SCREW OF SUFFICIENT LENGTH TO ACHIEVE MINIMUM EMBEDMENT OF 1 1/2" INTO WOOD FRAMING.

SYM	REVISION	DATE	BY

MI WINDOWS AND DOORS
GRATZ, PA.
MULLION 5766A FIN
VERTICAL ALUMINUM TUBE MULLION

PRODUCT TECHNOLOGY CORPORATION

DRL	02/02/06
N.T.S.	MI10059
	1 OF 1

FRP-S4SH

Left Side

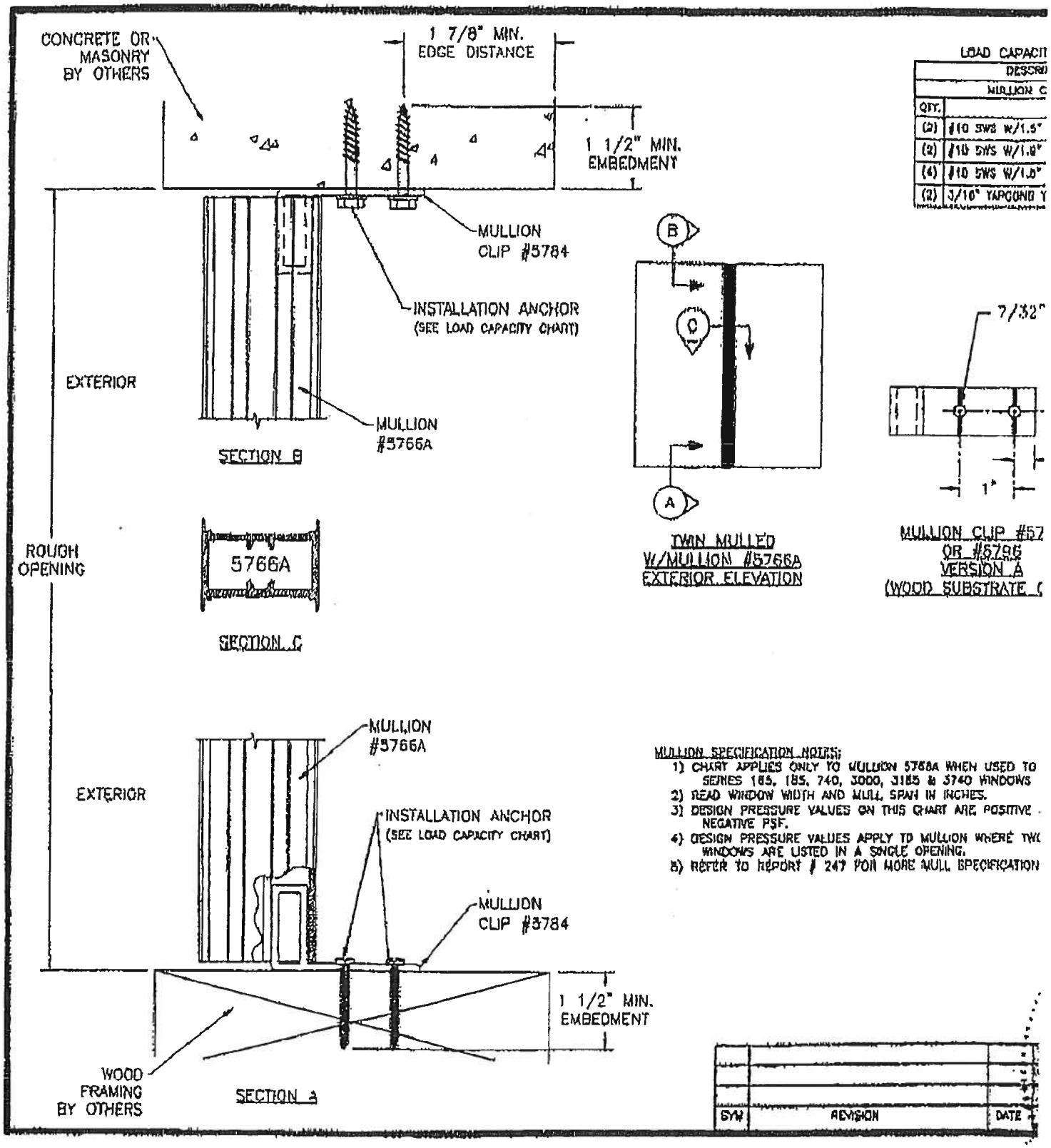
CONCRETE OR MASONRY BY OTHERS
1 7/8" MIN. EDGE DISTANCE
1 1/2" MIN. EMBEDMENT
MULLION CLIP #5784
INSTALLATION ANCHOR (SEE LOAD CAPACITY CHART)
EXTERIOR
MULLION #5766A
SECTION B
ROUGH OPENING
5766A
SECTION C
B
C
A
TWIN MULLED W/MULLION #5766A EXTERIOR ELEVATION
7/32"
1"
MULLION CLIP #57
OR #5786
VERSION A
(WOOD SUBSTRATE
LOAD CAPACI
DESCRI
MULLION C
QTY.
(2) #10 SWS W/1.5"
(2) #10 SWS W/1.0"
(4) #10 SWS W/1.0"
(2) 3/16" YAPGOND
MULLION #5766A
EXTERIOR
INSTALLATION ANCHOR (SEE LOAD CAPACITY CHART)
MULLION CLIP #5784
1 1/2" MIN. EMBEDMENT
WOOD FRAMING BY OTHERS
SECTION A
MULLION SPECIFICATION NOTES:
1) CHART APPLIES ONLY TO MULLION 5766A WHEN USED TO SERIES 185, 185, 740, 3000, 3185 & 3740 WINDOWS
2) READ WINDOW WIDTH AND MULL SPAN IN INCHES.
3) DESIGN PRESSURE VALUES ON THIS CHART ARE POSITIVE NEGATIVE PSF.
4) DESIGN PRESSURE VALUES APPLY TO MULLION WHERE TW WINDOWS ARE USTED IN A SINGLE OPENING.
5) REFER TO REPORT # 247 FOR MORE MULL SPECIFICATION
SYM
REVISION
DATE

Right Side

LOAD CAPACITIES OF ANCHORS

DESCRIPTION		PSF
MULLION CLIP #5784		70
QTY.		
(2)	#10 SWS W/1.0" MIN. EMBEDMENT	48
(2)	#10 SWS W/1.5" MIN. EMBEDMENT	70
(4)	#10 SWS W/1.5" MIN. EMBEDMENT	70
(2)	3/16" TAPCONS W/2 1/4" MIN. O.C. SPACING	70

VERTICAL MULLION DESIGN LOAD CAPACITIES CHART
FOR MULLION 5766A

WDW. WIDTH > MULL SPAN V	26.000	30.000	36.000	37.000	42.000	48.000	33.125
36.000	70	70	70	70	70	70	70
42.000	70	70	70	70	70	70	70
48.000	70	70	70	70	70	70	70
50.625	70	70	70	70	70	70	70
54.000	70	70	70	70	70	70	70
60.000	70	70	70	70	67	62	60
63.000	70	70	68	65	59	55	52
72.000	70	58	49	48	44	40	37

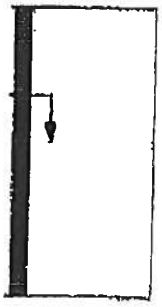

MULLED
IN #5766A
ELEVATION

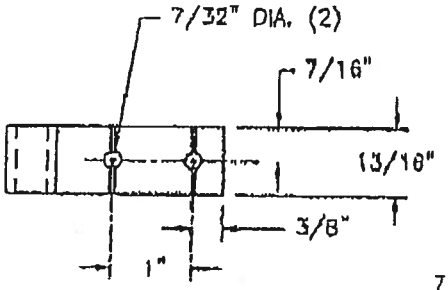

MULLION CLIP #5784
OR #5796
VERSION A
(WOOD SUBSTRATE ONLY)

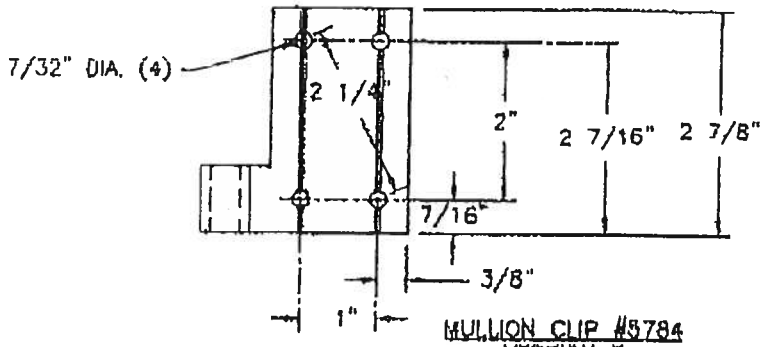

MULLION CLIP #5784
VERSION B

SPECIFICATION NOTES:
RT APPLIES ONLY TO MULLION 5766A WHEN USED TO MULL
RIES 165, 185, 740, 3000, 3185 & 3740 WINDOWS SIDE BY SIDE.
) WINDOW WIDTH AND MULL SPAN IN INCHES.
GN PRESSURE VALUES ON THIS CHART ARE POSITIVE AND
GATIVE PSF.
GN PRESSURE VALUES APPLY TO MULLION WHERE TWO OR MORE
NDOWS ARE LISTED IN A SINGLE OPENING.
ER TO REPORT # 247 FOR MORE MULL SPECIFICATIONS.

NOTE:
1) THE PRODUCT SHOWN HEREIN IS DESIGNED AND MANUFACTURED TO COMPLY WITH THE 2004 FLORIDA BUILDING CODE, SECTION 1714.5.6.
2) MULLION INSTALLATION DETAILS APPLY TO ALUMINUM TUBE MULLION, DIE NUMBER 5766A, WHEN USED TO MULL WINDOWS SIDE BY SIDE.
3) APPROVED IMPACT PROTECTIVE SYSTEM IS REQUIRED ON THIS PRODUCT IN AREAS REQUIRING IMPACT RESISTANCE.
4) USE 3/16" DIAMETER TAPCON ANCHOR OF SUFFICIENT LENGTH TO ACHIEVE MINIMUM EMBEDMENT OF 1 1/2" INTO MASONRY OR CONCRETE. 3/16" DIAMETER TAPCON MUST HAVE A 1 7/8" MINIMUM EDGE DISTANCE FROM EDGE OF MASONRY OR CONCRETE.
5) USE #10 WOOD SCREW OF SUFFICIENT LENGTH TO ACHIEVE MINIMUM EMBEDMENT OF 1 1/2" INTO WOOD FRAMING.

Roberto Lamas
Product Technology Corporation
1150 Seminole Avenue, Suite 6
Winter Park, Florida 32789

SYM	REVISION	DATE	BY

MI WINDOWS AND DOORS
GRATZ, PA.
MULLION 5766A FIN
VERTICAL ALUMINUM TUBE MULLION

PREPARED BY: Product Technology Corporation
Phone 407.622.4334 Fax 407.622.3320

DRN:	DRL	DATE:	02/02/06
SCALE:	N.T.S.	DWG. NO:	MIH0069
REV:		SHEET:	1 OF 1

MIP-5494

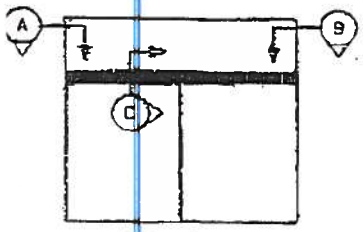

FATIS W/TRANSOM
MULLED OVER
W/MULL #5767
EXTERIOR ELEVATION

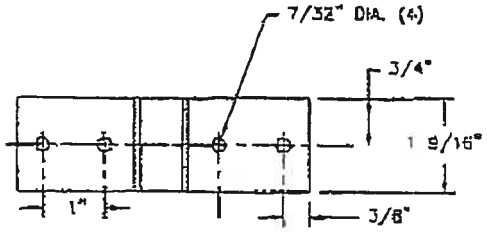

MULLION
CLIP #5768

LOAD CAPACITIES OF ANCHORS

DESCRIPTION	REF
MULLION CLIP #5768	55
QTY.	
(4) #10 SMS W/1.5" MIN. EMBEDMENT	70
(4) #10 SMS W/1.5" MIN. EMBEDMENT	70
(2) 3/16" TAPCONS W/2 1/4" MIN. O.C. SPACING	65

HORIZONTAL MULLION DESIGN LOAD CAPACITIES CHART
FOR MULLION 5767

MULL SPAN ? WIDE, HGT. ?	60.000	66.000	72.000	78.000	84.000	90.000	96.000	108.000
36.000	70	70	70	70	66	46	42	34
42.000	70	70	70	68	60	42	37	30
48.000	70	70	63	60	45	38	33	28
60.000	70	70	63	57	43	37	32	25
54.000	70	70	58	56	41	35	30	24
60.000	70	65	54	50	38	33	28	22
66.000	70	63	52	48	36	31	27	21
72.000	70	57	47	44	33	29	25	19

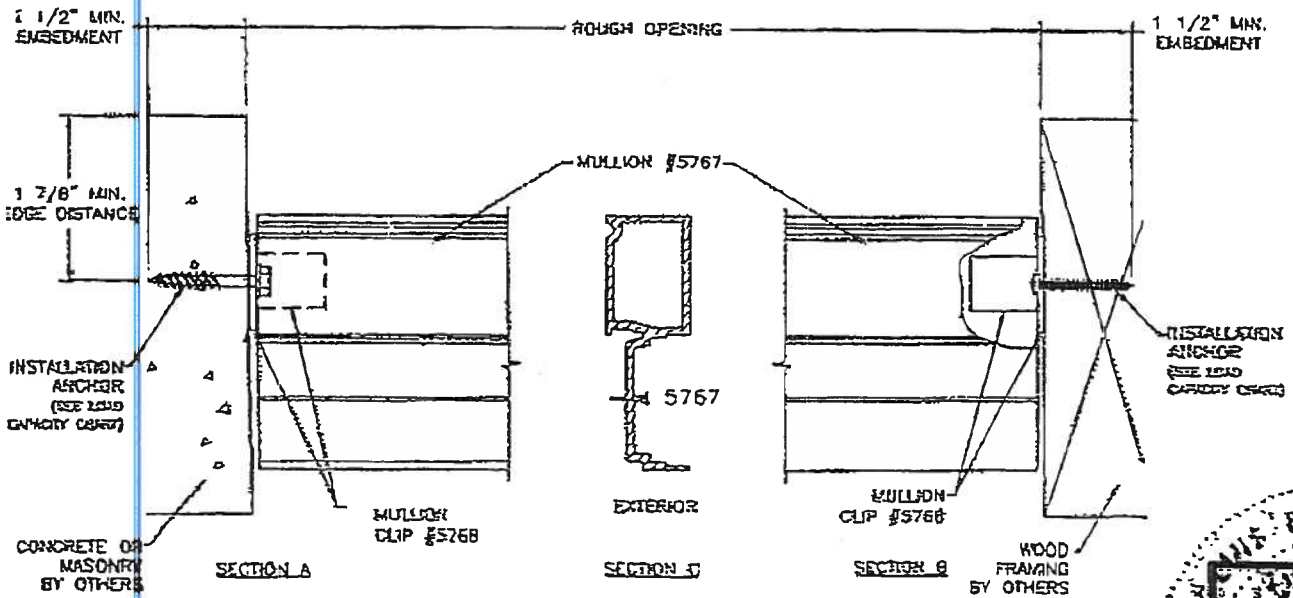

NOTE:
1) THE PRODUCT SHOWN HEREON IS DESIGNED AND MANUFACTURED TO COMPLY WITH THE 2001 FLORIDA BUILDING CODE, SECTION 1714.5.1.
2) MULLION INSTALLATION DETAILS APPLY TO ALUMINUM TUBE MULLION, SEE NUMBER 5767, WHEN USED TO MULL WINDOWS TO A TRANSOM.
3) APPROVED IMPACT PROTECTIVE SYSTEM IS INSTALLED ON THIS PRODUCT IN AREAS REQUIRING IMPACT RESISTANCE.
4) USE 3/16" DIAMETER TAPCON ANCHOR OF SUFFICIENT LENGTH TO ACHIEVE MINIMUM EMBEDMENT OF 1 1/2" INTO MASONRY OR CONCRETE. 3/16" DIAMETER TAPCON MUST HAVE A 1 7/8" MINIMUM EDGE DISTANCE FROM EDGE OF MASONRY OR CONCRETE.
5) USE #10 WOOD SCREW OF SUFFICIENT LENGTH TO ACHIEVE MINIMUM EMBEDMENT OF 1 1/2" INTO WOOD FRAMING.

MULLION SPECIFICATION NOTES:
1) CHART APPLIES ONLY TO MULLION 5767 WHEN USED TO MULL SERIES 150, 155, 740, 5000, 5103 AND 5740 WINDOWS TO A TRANSOM.
2) READ STOCK HEIGHT AND MULL SPAN IN INCHES.
3) DESIGN PRESSURE VALUES ON THIS CHART ARE POSITIVE AND NEGATIVE PSF.
4) DESIGN PRESSURE VALUES APPLY TO MULLION WHERE TWO OR MORE WINDOWS ARE LISTED AS A SINGLE OPENING.
5) REFER TO REPORT #554 FOR MORE DETAILED SPECIFICATIONS.

SYM	REVISION	DATE	BY

Roberto Lomas
P.E. No. 62574
STATE OF FLORIDA
Product Technology Corporation
1150 Lumbrera Ave., Suite F
Miami, Florida 33126
(305) 261-2001
LICENSED

MI WINDOWS AND DOORS
GRATZ, PA.
MULLION 5767 FIN
HORIZONTAL ALUMINUM TUBE MULLION

PTC Product Technology Corporation
Miami Atlanta Tampa Washington

DRL	02/01/06
N.T.S.	MH0074
	1 OF 1

MP-5573

Left Side

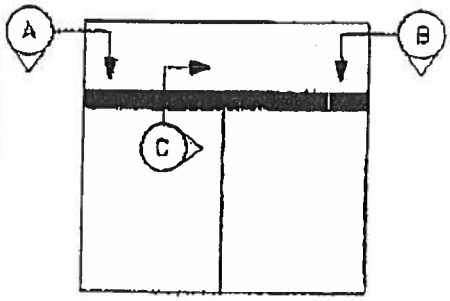

TWINS W/TRANSOM
MULLED OVER
W/MULL. #5767
EXTERIOR ELEVATION

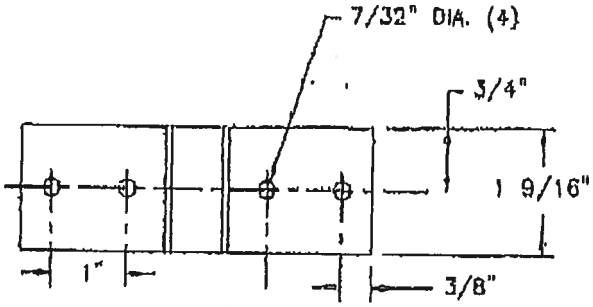

MULLION
CLIP #5768

LOAD CAPACITIES OF ANC

DESCRIPTION	
MULLION CLIP #5768	
QTY.	
(4)	#10 SWS W/1.9" MIN. EMBEDM
(4)	#10 SWS W/1.5" MIN. EMBEDM
(2)	3/16" TAPCONS W/2 1/4" MIN

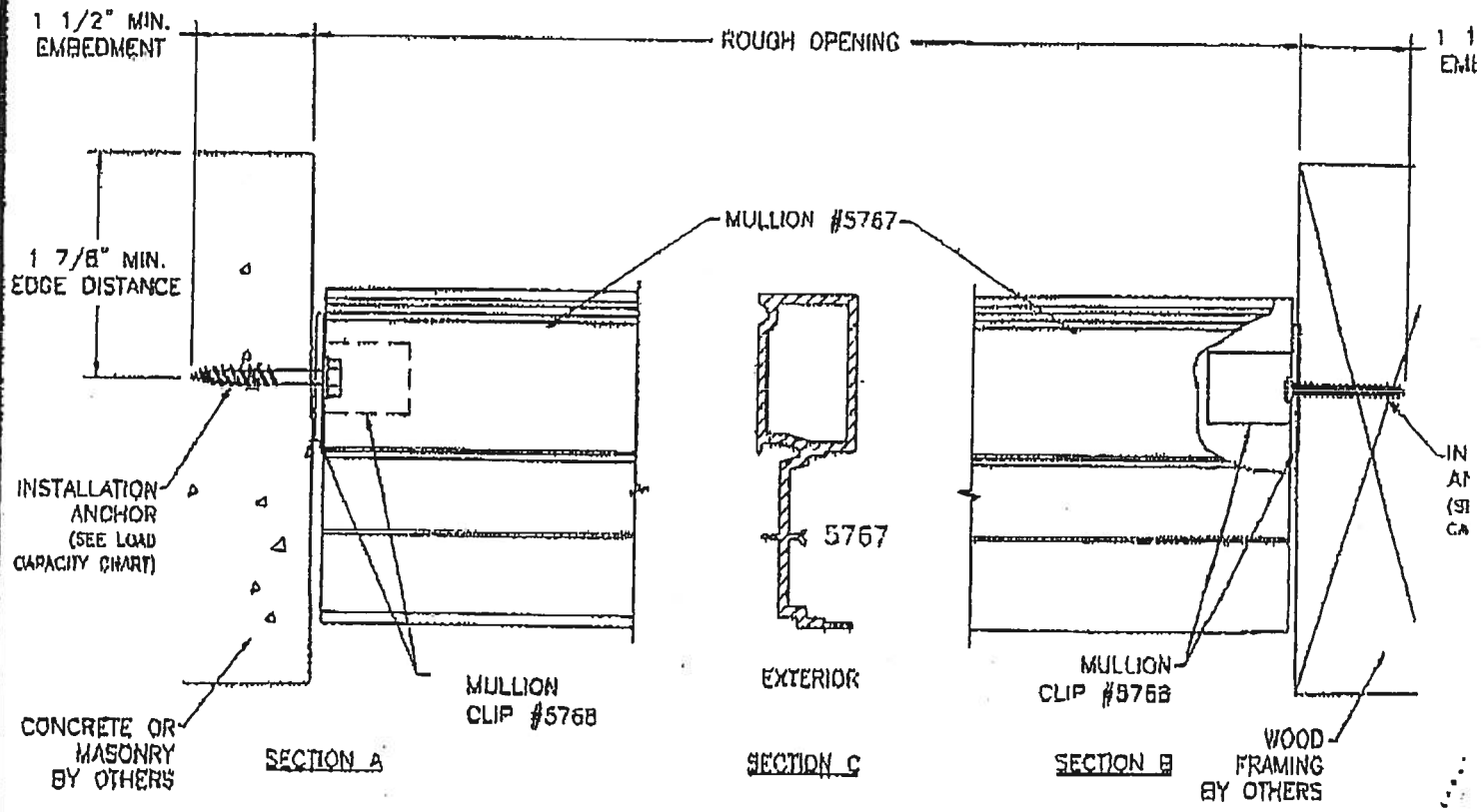

SYM	REVISION	DATE

Right Side

9/16"

LOAD CAPACITIES OF ANCHORS

DESCRIPTION		PSF
MULLION CLIP #5768		56
QTY.		
(4)	#10 SWS W/1.5" MIN. EMBEDMENT	70
(4)	#10 SWS W/1.5" MIN. EMBEDMENT	70
(2)	3/16" TAPCONS W/2 1/4" MIN. O.C. SPACING	65

HORIZONTAL MULLION DESIGN LOAD CAPACITIES CHART
FOR MULLION 5767

MULL SPAN > WDW. HGT. V	60.000	66.000	72.000	74.000	84.000	90.000	96.000	100.250
36.000	70	70	70	70	66	48	42	34
42.000	70	70	70	66	50	42	37	30
48.000	70	70	63	50	46	38	33	28
50.625	70	70	61	57	43	37	32	25
54.000	70	70	58	53	41	35	30	24
60.000	70	63	54	50	38	32	28	22
63.000	70	63	52	49	36	31	27	21
72.000	70	57	47	44	33	28	24	18

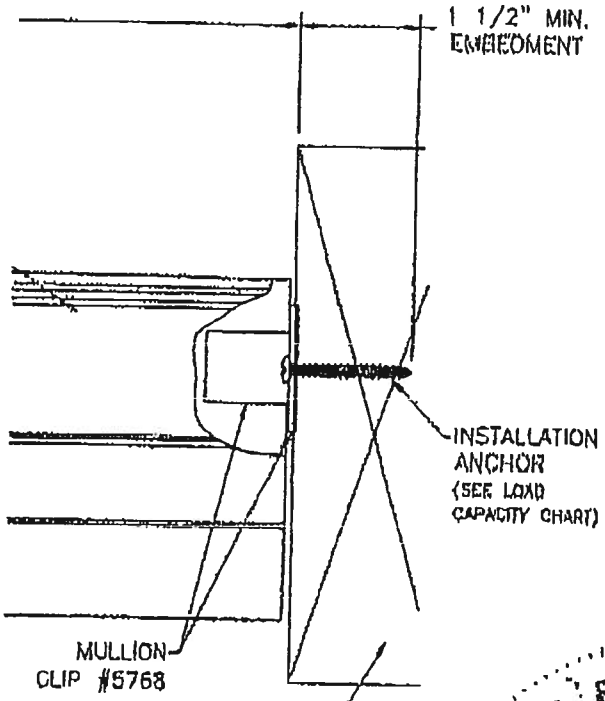

SECTION B

NOTE:
1) THE PRODUCT SHOWN HEREIN IS DESIGNED AND MANUFACTURED TO COMPLY WITH THE 2004 FLORIDA BUILDING CODE, SECTION 1714.5.6..
2) MULLION INSTALLATION DETAILS APPLY TO ALUMINUM TUBE MULLION, DIE NUMBER 5767, WHEN USED TO MULL WINDOWS TO A TRANSOM.
3) APPROVED IMPACT PROTECTIVE SYSTEM IS REQUIRED ON THIS PRODUCT IN AREAS REQUIRING IMPACT RESISTANCE.
4) USE 3/16" DIAMETER TAPCON ANCHOR OF SUFFICIENT LENGTH TO ACHIEVE MINIMUM EMBEDMENT OF 1 1/2" INTO MASONRY OR CONCRETE. 3/16" DIAMETER TAPCON MUST HAVE A 1 7/8" MINIMUM EDGE DISTANCE FROM EDGE OF MASONRY OR CONCRETE.
5) USE #10 WOOD SCREW OF SUFFICIENT LENGTH TO ACHIEVE MINIMUM EMBEDMENT OF 1 1/2" INTO WOOD FRAMING.

MULLION SPECIFICATION NOTES:
1) CHART APPLIES ONLY TO MULLION 5767 WHEN USED TO MULL SERIES 185, 185, 740, 3000, 3185 AND 3740 WINDOWS TO A TRANSOM.
2) READ WINDOW WIDTH AND MULL SPAN IN INCHES.
3) DESIGN PRESSURE VALUES ON THIS CHART ARE POSITIVE AND NEGATIVE PSF.
4) DESIGN PRESSURE VALUES APPLY TO MULLION WHERE TWO OR MORE WINDOWS ARE LISTED IN A SINGLE OPENING.
5) REFER TO REPORT #254 FOR MORE MULLION SPECIFICATIONS.

L. Roberto Lomas
P.E. No. 62594
STATE OF FLORIDA
Product Technology Corporation
1150 Louisiana Ave., Suite 5
Winter Park, Florida 32789
CERT. OF AUTHORIZATION NO. 2433
LICENSED PROFESSIONAL ENGINEER

MI WINDOWS AND DOORS
GRATZ, PA.
MULLION 5767 FIN
HORIZONTAL ALUMINUM TUBE MULLION

PREPARED BY: PTC Product Technology Corporation
Phone 407.222.8334 Fax 407.222.8330

DWN:	DATE:
DRL	02/01/06
SCALE: N.T.S.	DWG. NO: MIH0074
REV:	SHEET: 1 OF 1

SYM	REVISION	DATE	BY

MIP-8573

W.B. Howland Truss Co.
P.O. Box 700
Live Oak, FL 32064
(386) 362-1235
(386) 362-7124 (fax)

ROOF PITCH:	7/12
CLG PITCH:	3.5/12
OVERHANG:	1'4" PLUMB CUT
LOADING:	40 PSF T.L./SHINGLE
WIND LOAD:	110 MPH/ENCLOSED
EXT WALLS:	2x4 FRAMING
DATE:	6-6-07
REV. DATE:	6-25-07
(REMOVED INT BRG FROM A15)	

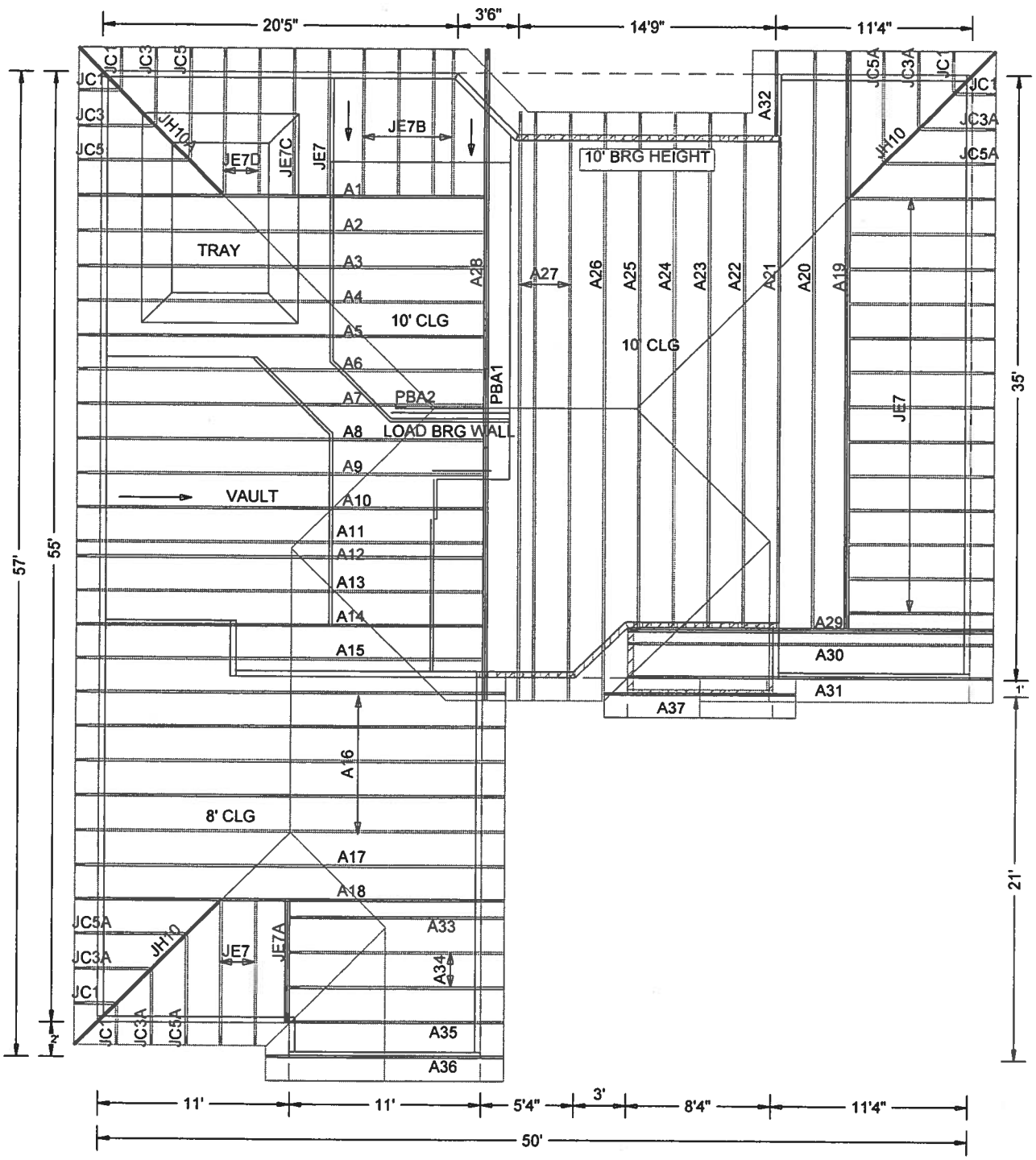

Job Name: Morris Res - Remmington M
Customer: HARTLEY BROTHERS
Designer: Chris McCall

JOB NO:
4641

PAGE NO:
1 OF 1

ITW Building Components Group, Inc.

1950 Marley Drive Haines City, FL 33844
Florida Engineering Certificate of Authorization Number: 567
Florida Certificate of Product Approval # FL1999
 Document ID:1T81215-Z0425114720

Truss Fabricator: W.B. Howland
Job Identification: 4641-/Morris Res - Remmington M /HARTLEY BROTHERS -- Gainesville, FL
Truss Count: 51
Model Code: Florida Building Code 2004 and 2006 Supplement
Truss Criteria: ANSI/TPI-2002(STD)/FBC
Engineering Software: Alpine Software,Version 7.36.
Structural Engineer of Record: The identity of the structural EOR did not exist as of
Address: the seal date per section 61G15-31.003(5a) of the FAC
Minimum Design Loads: Roof - 40.0 PSF @ 1.25 Duration
Floor - N/A
Wind - 110 MPH ASCE 7-02 -Closed

Seal Date: 06/25/2007

-Truss Design Engineer-
James F. Collins Jr.
Florida License Number: 52212
1950 Marley Drive
Haines City, FL 33844

Notes:

1. Determination as to the suitability of these truss components for the structure is the responsibility of the building designer/engineer of record, as defined in ANSI/TPI 1
2. The drawing date shown on this index sheet must match the date shown on the individual truss component drawing.
3. As shown on attached drawings; the drawing number is preceded by: HCUSR215

Details: CNBRGBLK-BRCLBSUB-A11015EE-GBLLETIN-

#	Ref Description	Drawing#	Date
1	71997--A1	07176024	06/25/07
2	71998--A2	07176025	06/25/07
3	71999--A3	07176026	06/25/07
4	72000--A4	07176027	06/25/07
5	72001--A5	07176028	06/25/07
6	72002--A6	07176029	06/25/07
7	72003--A7	07176015	06/25/07
8	72004--A8	07176031	06/25/07
9	72005--A9	07176021	06/25/07
10	72006--A10	07176030	06/25/07
11	72007--A11	07176032	06/25/07
12	72008--A12	07176023	06/25/07
13	72009--A13	07176022	06/25/07
14	72010--A14	07176020	06/25/07
15	72011--A15	07176046	06/25/07
16	72012--A16	07176019	06/25/07
17	72013--A17	07176018	06/25/07
18	72014--A18	07176011	06/25/07
19	72015--A19	07176049	06/25/07
20	72016--A20	07176050	06/25/07
21	72017--A21	07176033	06/25/07
22	72018--A22	07176009	06/25/07
23	72019--A23	07176052	06/25/07
24	72020--A24	07176005	06/25/07
25	72021--A25	07176006	06/25/07
26	72022--A26	07176007	06/25/07
27	72023--A27	07176008	06/25/07
28	72024--A28	07176047	06/25/07
29	72025--A29	07176044	06/25/07
30	72026--A30	07176034	06/25/07
31	72027--A31	07176004	06/25/07
32	72028--A32	07176039	06/25/07
33	72029--A33	07176051	06/25/07
34	72030--A34	07176038	06/25/07
35	72031--A35	07176037	06/25/07
36	72032--A36	07176036	06/25/07
37	72033--A37	07176048	06/25/07
38	72034--JC1	07176016	06/25/07
39	72035--JC3	07176042	06/25/07
40	72036--JC3A	07176014	06/25/07
41	72037--JC5	07176041	06/25/07
42	72038--JC5A	07176013	06/25/07
43	72039--JE7	07176017	06/25/07
44	72040--JE7A	07176035	06/25/07
45	72041--JE7B	07176046	06/25/07
46	72042--JE7C	07176045	06/25/07
47	72043--JE7D	07176043	06/25/07
48	72044--JH10	07176012	06/25/07
49	72045--JH10A	07176040	06/25/07
50	72046--PBA1	07176047	06/25/07
51	72047--PBA2	07176010	06/25/07

ITW Building Components Group, Inc.

1950 Marley Drive Haines City, FL 33844
Florida Engineering Certificate of Authorization Number: 567
 Document ID:1T8I215-Z0425114720

Truss Fabricator: W.B. Howland
Job Identification: 4641-/Morris Res - Remmington M /HARTLEY BROTHERS -- Gainesville, FL
Truss Count: 2
Model Code: Florida Building Code 2004 and 2006 Supplement
Truss Criteria: ANSI/TPI-2002(STD)/FBC
Engineering Software: Alpine Software,Version 7.36.
Structural Engineer of Record:
Address:
Minimum Design Loads: Roof - 40.0 PSF @ 1.25 Duration
Floor - N/A
Wind - 110 MPH ASCE 7-02 -Closed

Seal Date: 06/25/2007

-Truss Design Engineer-
James F. Collins Jr.
Florida License Number: 52212
1950 Marley Drive
Haines City, FL 33844

Notes:

1. Determination as to the suitability of these truss components for the structure is the responsibility of the building designer/engineer of record, as defined in ANSI/TPI 1
2. The drawing date shown on this index sheet must match the date shown on the individual truss component drawing.
3. As shown on attached drawings; the drawing number is preceded by: HCUSR215

Revised Trusses

#	Ref	Description	Drawing#	Date
1	72025--A29		07176044	06/25/07
2	72026--A30		07176034	06/25/07

ALPINE

Top chord 2x4 SP #2 N :T2 2x6 SP #2 N:
Bot chord 2x6 SP #2 N
Webs 2x4 SP #2 N

Wind reactions based on MWFRS pressures.

Deflection meets L/240 live and L/180 total load.

See DWGS BCFILLER1106 for bottom chord (BC) filler details.
Latrally brace BC above filler @24" O.C. (or as designed)
Including a brace on BC directly above both ends of filler
(if no rigid diaphragm exists at that point).

110 mph wind, 15.00 ft mean hgt, ASCE 7-02, CLOSED bldg, Located anywhere in roof, CAT II, EXP B, wind TC DL=5.0 psf, wind BC DL=5.0 psf. Iw=1.00 GCpi(+/-)=0.18

Right end vertical not exposed to wind pressure.

H = recommended connection based on manufacturer tested capacities and calculations. Conditions may exist that require different connections than indicated. Refer to manufacturer publication for additional information.

In lieu of structural panels use purlins to brace all flat TC @ 24" OC.

#1 hip supports 7-0-0 jacks W/2 panel TC and no end vert.

The overall height of this truss excluding overhang is 4-5-5.

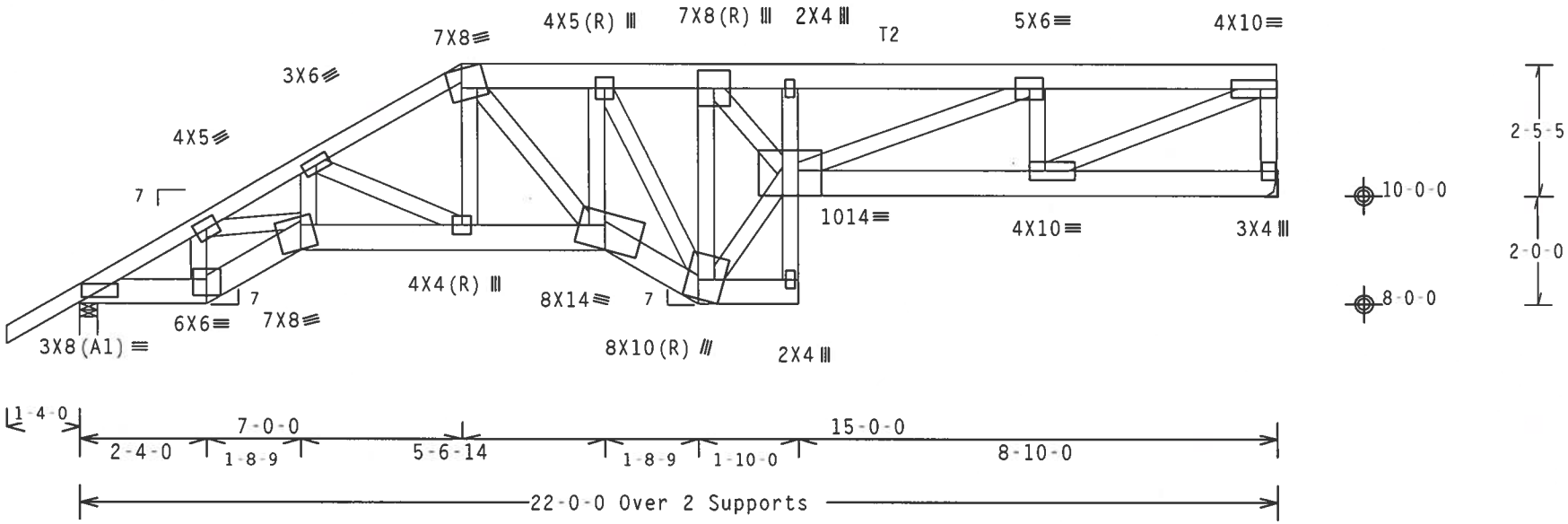

R=1842 U=167 W=4"

R=1986 U=160 H=Simpson HUS26
w/ (4) 16d, 0.162"x2.5" nails in Truss
w/ (14) 16d, 0.162"x2.5" nails in Girder
Girder is (2)2X8 min. So.Pine

Design Crit: TPI-2002(STD)/FBC

PLT TYP. Wave | Cq/RT=1.00(1.25)/10(0) 7.36.0424 | QTY:1 | FL/-/5/-/-/R/- | Scale =.3125"/Ft.

ALPINE
ITW Building Components Group, Inc.
Haines City, FL 33844
FL Certificate of Authorization # 567

WARNING TRUSSES REQUIRE EXTREME CARE IN FABRICATION, HANDLING, SHIPPING, INSTALLING AND BRACING. REFER TO BCSI (BUILDING COMPONENT SAFETY INFORMATION), PUBLISHED BY TPI (TRUSS PLATE INSTITUTE, 218 NORTH LEE STREET, SUITE 312, ALEXANDRIA, VA, 22314) AND WTCA (WOOD TRUSS COUNCIL OF AMERICA, 6300 ENTERPRISE LANE, MADISON, WI 53719) FOR SAFETY PRACTICES PRIOR TO PERFORMING THESE FUNCTIONS. UNLESS OTHERWISE INDICATED TOP CHORD SHALL HAVE PROPERLY ATTACHED STRUCTURAL PANELS AND BOTTOM CHORD SHALL HAVE A PROPERLY ATTACHED RIGID CEILING.

IMPORTANTFURNISH A COPY OF THIS DESIGN TO THE INSTALLATION CONTRACTOR. ITW BCG, INC. SHALL NOT BE RESPONSIBLE FOR ANY DEVIATION FROM THIS DESIGN; ANY FAILURE TO BUILD THE TRUSS IN CONFORMANCE WITH TPI; OR FABRICATING, HANDLING, SHIPPING, INSTALLING & BRACING OF TRUSSES.
DESIGN CONFORMS WITH APPLICABLE PROVISIONS OF NDS (NATIONAL DESIGN SPEC. BY AF&PA) AND TPI. ITW BCG CONNECTOR PLATES ARE MADE OF 20/18/16GA (W,H/SS/K) ASTM A653 GRADE 40/60 (W, K/H,SS) GALV. STEEL. APPLY PLATES TO EACH FACE OF TRUSS AND, UNLESS OTHERWISE LOCATED ON THIS DESIGN, POSITION PER DRAWINGS 160A-Z. ANY INSPECTION OF PLATES FOLLOWED BY (1) SHALL BE PER ANNEX A3 OF TPI1-2002 SEC.3. A SEAL ON THIS DRAWING INDICATES ACCEPTANCE OF PROFESSIONAL ENGINEERING RESPONSIBILITY SOLELY FOR THE TRUSS COMPONENT DESIGN SHOWN. THE SUITABILITY AND USE OF THIS COMPONENT FOR ANY BUILDING IS THE RESPONSIBILITY OF THE BUILDING DESIGNER PER ANSI/TPI 1 SEC. 2.

JAMES F. COLLINS JR. LICENSE No. 52132 STATE OF FLORIDA PROFESSIONAL ENGINEER
Jun

TC LL	20.0 PSF	REF	R215-- 71997
TC DL	10.0 PSF	DATE	06/25/07
BC DL	10.0 PSF	DRW	HCUSR215 07176024
BC LL	0.0 PSF	HC-ENG	DAB/WHK
TOT.LD.	40.0 PSF	SEQN-	183079
DUR.FAC.	1.25	FROM	CDM
SPACING	24.0"	JREF-	1T8I215_Z04

THIS DWG PREPARED FROM COMPUTER INPUT (LOADS & DIMENSIONS) SUBMITTED BY TRUSS MFR.

Top chord 2x4 SP #2 N
Bot chord 2x4 SP #2 N
Webs 2x4 SP #2 N

Wind reactions based on MWFRS pressures.

Right end vertical not exposed to wind pressure.

Deflection meets L/240 live and L/180 total load.

The overall height of this truss excluding overhang is 5-7-5.

110 mph wind, 15.00 ft mean hgt, ASCE 7-02, CLOSED bldg, not located within 4.50 ft from roof edge, CAT II, EXP B, wind TC DL=5.0 psf, wind BC DL=5.0 psf. Iw=1.00 GCpi(+/-)=0.18

H = recommended connection based on manufacturer tested capacities and calculations. Conditions may exist that require different connections than indicated. Refer to manufacturer publication for additional information.

In lieu of structural panels use purlins to brace all flat TC @ 24" OC.

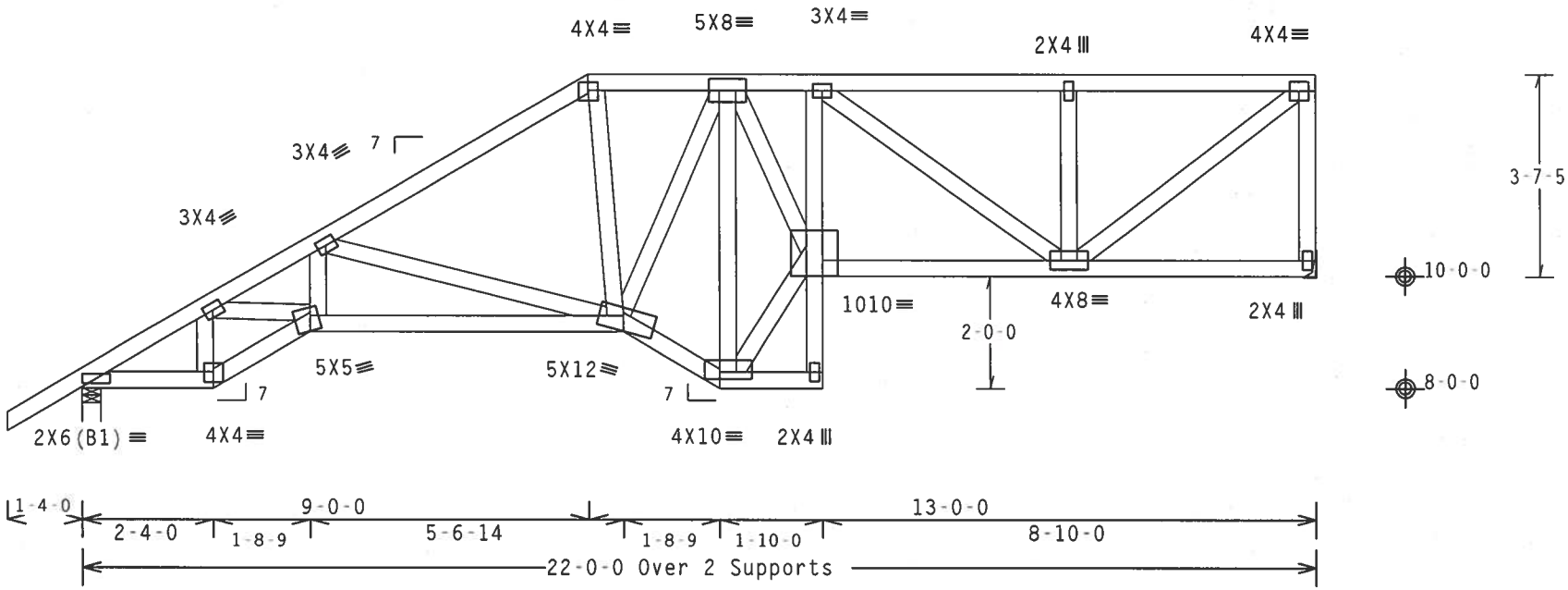

R=1022 U=79 W=4"

R=909 U=103 H=Simpson LUS26
w/ (3) 10d Common, 0.148"x3.0" nails in Truss
w/ (4) 10d Common, 0.148"x3.0" nails in Girder
Girder is (2)2X8 min. So.Pine

Design Crit: TPI-2002(STD)/FBC

PLT TYP. Wave | Cq/RT=1.00(1.25)/10(0) 7.36.0424 | QTY:1 | FL/-/5/-/-/R/- | Scale =.3125"/Ft.

ALPINE
ITW Building Components Group, Inc.
Haines City, FL 33844
FL Certificate of Authorization # 567

WARNING TRUSSES REQUIRE EXTREME CARE IN FABRICATION, HANDLING, SHIPPING, INSTALLING AND BRACING. REFER TO BCSI (BUILDING COMPONENT SAFETY INFORMATION), PUBLISHED BY TPI (TRUSS PLATE INSTITUTE, 218 NORTH LEE STREET, SUITE 312, ALEXANDRIA, VA, 22314) AND WICA (WOOD TRUSS COUNCIL OF AMERICA, 6300 ENTERPRISE LANE, MADISON, WI 53719) FOR SAFETY PRACTICES PRIOR TO PERFORMING THESE FUNCTIONS. UNLESS OTHERWISE INDICATED TOP CHORD SHALL HAVE PROPERLY ATTACHED STRUCTURAL PANELS AND BOTTOM CHORD SHALL HAVE A PROPERLY ATTACHED RIGID CEILING.

IMPORTANTFURNISH A COPY OF THIS DESIGN TO THE INSTALLATION CONTRACTOR. ITW BCG, INC. SHALL NOT BE RESPONSIBLE FOR ANY DEVIATION FROM THIS DESIGN; ANY FAILURE TO BUILD THE TRUSS IN CONFORMANCE WITH TPI; OR FABRICATING, HANDLING, SHIPPING, INSTALLING & BRACING OF TRUSSES.
DESIGN CONFORMS WITH APPLICABLE PROVISIONS OF NDS (NATIONAL DESIGN SPEC. BY AF&PA) AND TPI. ITW BCG CONNECTOR PLATES ARE MADE OF 20/18/16GA (W.H/SS/K) ASTM A653 GRADE 40/60 (W. K/H.SS) GALV. STEEL. APPLY PLATES TO EACH FACE OF TRUSS AND, UNLESS OTHERWISE LOCATED ON THIS DESIGN, POSITION PER DRAWINGS 160A-Z. ANY INSPECTION OF PLATES FOLLOWED BY (1) SHALL BE PER ANNEX A3 OF TPI1-2002 SEC.3. A SEAL ON THIS DRAWING INDICATES ACCEPTANCE OF PROFESSIONAL ENGINEERING RESPONSIBILITY SOLELY FOR THE TRUSS COMPONENT DESIGN SHOWN. THE SUITABILITY AND USE OF THIS COMPONENT FOR ANY BUILDING IS THE RESPONSIBILITY OF THE BUILDING DESIGNER PER ANSI/TPI 1 SEC. 2.

JAMES F. COLLINS, JR. LICENSE No. 52212 STATE OF FLORIDA PROFESSIONAL ENGINEER
Jun 25, 2007

TC LL	20.0 PSF	REF	R215-- 71998
TC DL	10.0 PSF	DATE	06/25/07
BC DL	10.0 PSF	DRW	HCUSR215 07176025
BC LL	0.0 PSF	HC-ENG	DAB/WHK
TOT.LD.	40.0 PSF	SEQN-	183075
DUR.FAC.	1.25	FROM	CDM
SPACING	24.0"	JREF-	1T8I215_Z04

THIS DWG PREPARED FROM COMPUTER INPUT (LOADS & DIMENSIONS) SUBMITTED BY TRUSS MFR.

Top chord 2x4 SP #2 N
Bot chord 2x4 SP #2 N
Webs 2x4 SP #2 N

Wind reactions based on MWFRS pressures.

Right end vertical not exposed to wind pressure.

Deflection meets L/240 live and L/180 total load.

The overall height of this truss excluding overhang is 6-9-5.

110 mph wind, 15.00 ft mean hgt, ASCE 7-02, CLOSED bldg, not located within 4.50 ft from roof edge, CAT II, EXP B, wind TC DL=5.0 psf, wind BC DL=5.0 psf. Iw=1.00 GCpi(+/-)=0.18

H = recommended connection based on manufacturer tested capacities and calculations. Conditions may exist that require different connections than indicated. Refer to manufacturer publication for additional information.

In lieu of structural panels use purlins to brace all flat TC @ 24" OC.

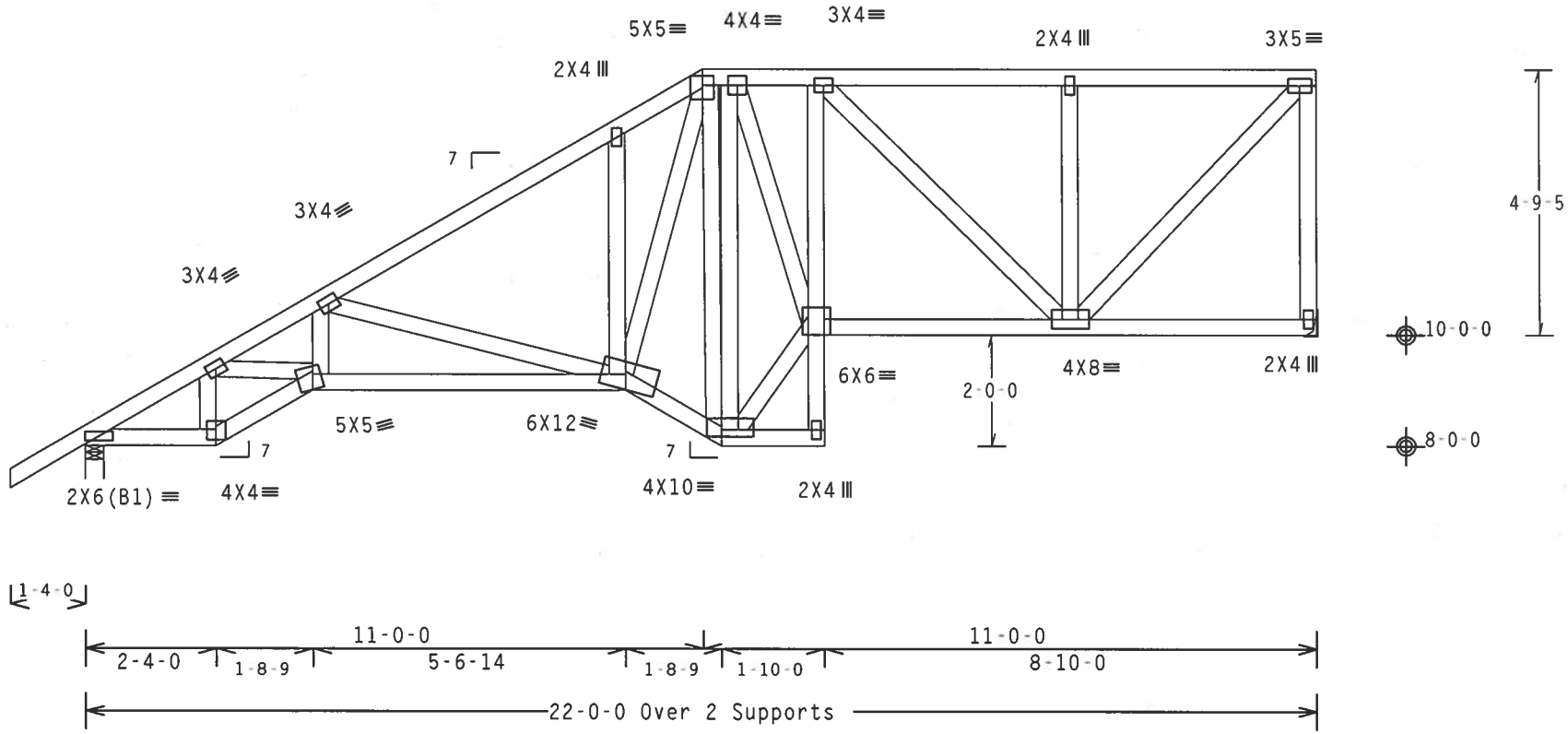

R=1022 U=70 W=4"

R=909 U=109 H=Simpson LUS26
w/ (3) 10d Common, 0.148"x3.0" nails in Truss
w/ (4) 10d Common, 0.148"x3.0" nails in Girder
Girder is (2)2X8 min. So.Pine

Design Crit: TPI-2002(STD)/FBC

PLT TYP. Wave Cq/RT=1.00(1.25)/10(0) 7.36.0424 QTY:1 FL/-/5/-/-/R/- Scale =.3125"/Ft.

ALPINE
ITW Building Components Group, Inc.
Haines City, FL 33844
FL Certificate of Authorization # 567

WARNING TRUSSES REQUIRE EXTREME CARE IN FABRICATION, HANDLING, SHIPPING, INSTALLING AND BRACING. REFER TO BCSI (BUILDING COMPONENT SAFETY INFORMATION), PUBLISHED BY TPI (TRUSS PLATE INSTITUTE, 218 NORTH LEE STREET, SUITE 312, ALEXANDRIA, VA, 22314) AND WTCA (WOOD TRUSS COUNCIL OF AMERICA, 6300 ENTERPRISE LANE, MADISON, WI 53719) FOR SAFETY PRACTICES PRIOR TO PERFORMING THESE FUNCTIONS. UNLESS OTHERWISE INDICATED TOP CHORD SHALL HAVE PROPERLY ATTACHED STRUCTURAL PANELS AND BOTTOM CHORD SHALL HAVE A PROPERLY ATTACHED RIGID CEILING.

IMPORTANT FURNISH A COPY OF THIS DESIGN TO THE INSTALLATION CONTRACTOR. ITW BCG, INC. SHALL NOT BE RESPONSIBLE FOR ANY DEVIATION FROM THIS DESIGN; ANY FAILURE TO BUILD THE TRUSS IN CONFORMANCE WITH TPI; OR FABRICATING, HANDLING, SHIPPING, INSTALLING & BRACING OF TRUSSES. DESIGN CONFORMS WITH APPLICABLE PROVISIONS OF NDS (NATIONAL DESIGN SPEC. BY AF&PA) AND TPI. ITW BCG CONNECTOR PLATES ARE MADE OF 20/18/16GA (W,H/SS/K) ASTM A653 GRADE 40/60 (W, K/H,SS) GALV. STEEL. APPLY PLATES TO EACH FACE OF TRUSS AND, UNLESS OTHERWISE LOCATED ON THIS DESIGN, POSITION PER DRAWINGS 160A-Z. ANY INSPECTION OF PLATES FOLLOWED BY (1) SHALL BE PER ANNEX A3 OF TPI1-2002 SEC.3. A SEAL ON THIS DRAWING INDICATES ACCEPTANCE OF PROFESSIONAL ENGINEERING RESPONSIBILITY SOLELY FOR THE TRUSS COMPONENT DESIGN SHOWN. THE SUITABILITY AND USE OF THIS COMPONENT FOR ANY BUILDING IS THE RESPONSIBILITY OF THE BUILDING DESIGNER PER ANSI/TPI 1 SEC. 2.

JAMES F. COLLINS, JR. LICENSED No. 52212 STATE OF FLORIDA PROFESSIONAL ENGINEER
Jun 25-07

TC LL	20.0 PSF	REF	R215-- 71999
TC DL	10.0 PSF	DATE	06/25/07
BC DL	10.0 PSF	DRW	HCUSR215 07176026
BC LL	0.0 PSF	HC-ENG	DAB/WHK
TOT.LD.	40.0 PSF	SEQN-	183071
DUR.FAC.	1.25	FROM	CDM
SPACING	24.0"	JREF-	1T8I215_Z04

THIS DWG PREPARED FROM COMPUTER INPUT (LOADS & DIMENSIONS) SUBMITTED BY TRUSS MFR.

Top chord 2x4 SP #2 N
Bot chord 2x4 SP #2 N
Webs 2x4 SP #2 N

Wind reactions based on MWFRS pressures.

Right end vertical not exposed to wind pressure.

Deflection meets L/240 live and L/180 total load.

The overall height of this truss excluding overhang is 7-11-5.

110 mph wind, 15.00 ft mean hgt, ASCE 7-02, CLOSED bldg, not located within 4.50 ft from roof edge, CAT II, EXP B, wind TC DL=5.0 psf, wind BC DL=5.0 psf. Iw=1.00 GCpi(+/-)=0.18

H = recommended connection based on manufacturer tested capacities and calculations. Conditions may exist that require different connections than indicated. Refer to manufacturer publication for additional information.

In lieu of structural panels use purlins to brace all flat TC @ 24" OC.

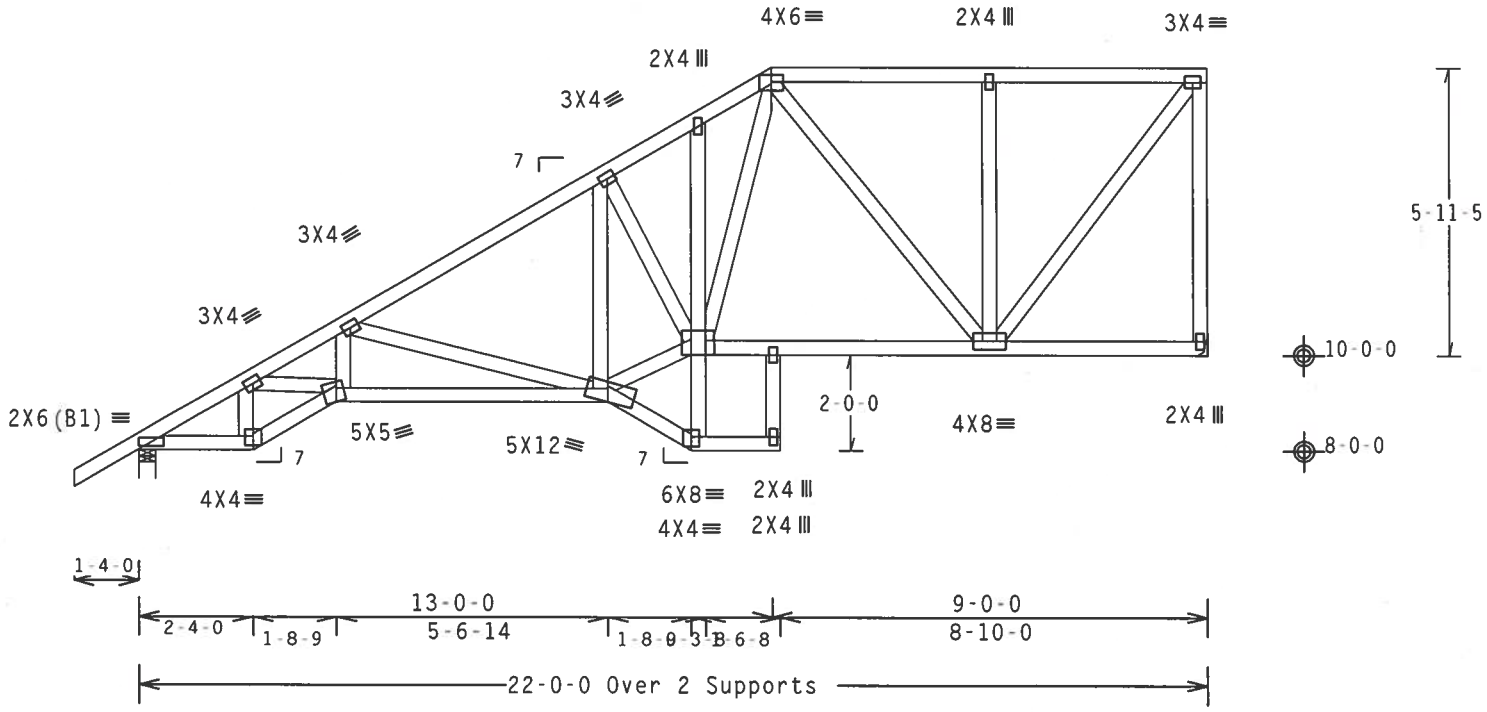

R=1022 U=61 W=4"

R=909 U=116 H=Simpson LUS26
w/ (3) 10d Common, 0.148"x3.0" nails in Truss
w/ (4) 10d Common, 0.148"x3.0" nails in Girder
Girder is (2)2X8 min. So.Pine

Design Crit: TPI-2002(STD)/FBC

PLT TYP. Wave | Cg/RT=1.00(1.25)/10(0) | 7.36.0424 | QTY:1 | FL/-/5/-/-/R/- | Scale =.25"/Ft.

ALPINE
ITW Building Components Group, Inc.

WARNING TRUSSES REQUIRE EXTREME CARE IN FABRICATION, HANDLING, SHIPPING, INSTALLING AND BRACING. REFER TO BCSI (BUILDING COMPONENT SAFETY INFORMATION), PUBLISHED BY TPI (TRUSS PLATE INSTITUTE, 218 NORTH LEE STREET, SUITE 312, ALEXANDRIA, VA. 22314) AND WTCA (WOOD TRUSS COUNCIL OF AMERICA, 6300 ENTERPRISE LANE, MADISON, WI 53719) FOR SAFETY PRACTICES PRIOR TO PERFORMING THESE FUNCTIONS. UNLESS OTHERWISE INDICATED TOP CHORD SHALL HAVE PROPERLY ATTACHED STRUCTURAL PANELS AND BOTTOM CHORD SHALL HAVE A PROPERLY ATTACHED RIGID CEILING.

IMPORTANTFURNISH A COPY OF THIS DESIGN TO THE INSTALLATION CONTRACTOR. ITW BCG, INC. SHALL NOT BE RESPONSIBLE FOR ANY DEVIATION FROM THIS DESIGN; ANY FAILURE TO BUILD THE TRUSS IN CONFORMANCE WITH TPI; OR FABRICATING, HANDLING, SHIPPING, INSTALLING & BRACING OF TRUSSES.
DESIGN CONFORMS WITH APPLICABLE PROVISIONS OF NDS (NATIONAL DESIGN SPEC. BY AF&PA) AND TPI. ITW BCG CONNECTOR PLATES ARE MADE OF 20/18/16GA (W.H/SS/K) ASTM A653 GRADE 40/60 (W. K/H.SS) GALV. STEEL. APPLY PLATES TO EACH FACE OF TRUSS AND, UNLESS OTHERWISE LOCATED ON THIS DESIGN, POSITION PER DRAWINGS 160A-Z. ANY INSPECTION OF PLATES FOLLOWED BY (1) SHALL BE PER ANNEX A3 OF TPI1-2002 SEC.3. A SEAL ON THIS DRAWING INDICATES ACCEPTANCE OF PROFESSIONAL ENGINEERING RESPONSIBILITY SOLELY FOR THE TRUSS COMPONENT DESIGN SHOWN. THE SUITABILITY AND USE OF THIS COMPONENT FOR ANY BUILDING IS THE RESPONSIBILITY OF THE

JAMES F. COLLINS JR. LICENSE No. 62242 STATE OF FLORIDA PROFESSIONAL ENGINEER

TC LL	20.0 PSF	REF R215-- 72000
TC DL	10.0 PSF	DATE 06/25/07
BC DL	10.0 PSF	DRW HCUSR215 07176027
BC LL	0.0 PSF	HC-ENG DAB/WHK
TOT.LD.	40.0 PSF	SEQN- 183063
DUR.FAC.	1.25	FROM CDM

THIS DWG PREPARED FROM COMPUTER INPUT (LOADS & DIMENSIONS) SUBMITTED BY TRUSS MFR.

Top chord 2x4 SP #2 N
Bot chord 2x4 SP #2 N
Webs 2x4 SP #2 N

Wind reactions based on MWFRS pressures.

Right end vertical not exposed to wind pressure.

Deflection meets L/240 live and L/180 total load.

The overall height of this truss excluding overhang is 9-1-5.

110 mph wind, 15.00 ft mean hgt, ASCE 7-02, CLOSED bldg, not located within 4.50 ft from roof edge, CAT II, EXP B, wind TC DL=5.0 psf, wind BC DL=5.0 psf. Iw=1.00 GCpi(+/-)=0.18

H = recommended connection based on manufacturer tested capacities and calculations. Conditions may exist that require different connections than indicated. Refer to manufacturer publication for additional information.

In lieu of structural panels use purlins to brace all flat TC @ 24" OC.

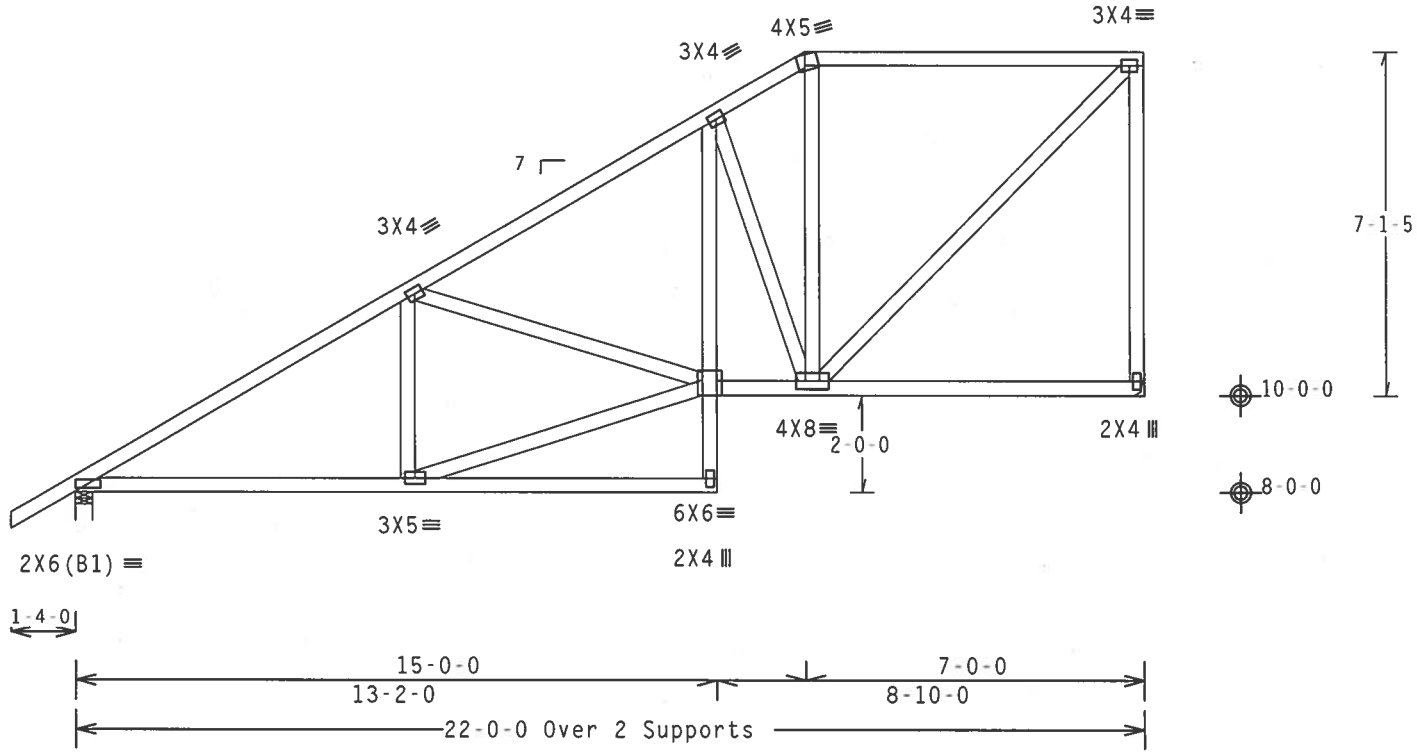

R=1015 U=53 W=4"

R=905 U=126 H=Simpson LUS26
w/ (3) 10d Common, 0.148"x3.0" nails in Truss
w/ (4) 10d Common, 0.148"x3.0" nails in Girder
Girder is (2)2X8 min. So.Pine

Design Crit: TPI-2002(STD)/FBC
Cq/RT=1.00(1.25)/10(0) 7.36.0424

PLT TYP. Wave QTY:1 FL/-/5/-/-/R/- Scale =.25"/Ft.

ALPINE
ITW Building Components Group, Inc.

WARNING TRUSSES REQUIRE EXTREME CARE IN FABRICATION, HANDLING, SHIPPING, INSTALLING AND BRACING. REFER TO BCSI (BUILDING COMPONENT SAFETY INFORMATION), PUBLISHED BY TPI (TRUSS PLATE INSTITUTE, 218 NORTH LEE STREET, SUITE 312, ALEXANDRIA, VA, 22314) AND WTCA (WOOD TRUSS COUNCIL OF AMERICA, 6300 ENTERPRISE LANE, MADISON, WI 53719) FOR SAFETY PRACTICES PRIOR TO PERFORMING THESE FUNCTIONS. UNLESS OTHERWISE INDICATED TOP CHORD SHALL HAVE PROPERLY ATTACHED STRUCTURAL PANELS AND BOTTOM CHORD SHALL HAVE A PROPERLY ATTACHED RIGID CEILING.

IMPORTANTFURNISH A COPY OF THIS DESIGN TO THE INSTALLATION CONTRACTOR. ITW BCG, INC. SHALL NOT BE RESPONSIBLE FOR ANY DEVIATION FROM THIS DESIGN; ANY FAILURE TO BUILD THE TRUSS IN CONFORMANCE WITH TPI; OR FABRICATING, HANDLING, SHIPPING, INSTALLING & BRACING OF TRUSSES.
DESIGN CONFORMS WITH APPLICABLE PROVISIONS OF NDS (NATIONAL DESIGN SPEC, BY AF&PA) AND TPI. ITW BCG CONNECTOR PLATES ARE MADE OF 20/18/16GA (W,H/SS/K) ASTM A653 GRADE 40/60 (W, K/H,SS) GALV. STEEL. APPLY PLATES TO EACH FACE OF TRUSS AND, UNLESS OTHERWISE LOCATED ON THIS DESIGN, POSITION PER DRAWINGS 160A-Z. ANY INSPECTION OF PLATES FOLLOWED BY (I) SHALL BE PER ANNEX A3 OF TPI1-2002 SEC.3. A SEAL ON THIS DRAWING INDICATES ACCEPTANCE OF PROFESSIONAL ENGINEERING RESPONSIBILITY SOLELY FOR THE TRUSS COMPONENT DESIGN SHOWN. THE SUITABILITY AND USE OF THIS COMPONENT FOR ANY BUILDING IS THE RESPONSIBILITY OF THE

JAMES F. COLLINS JR. LICENSE No. 52212 STATE OF FLORIDA PROFESSIONAL ENGINEER

TC LL	20.0 PSF	REF	R215-- 72001
TC DL	10.0 PSF	DATE	06/25/07
BC DL	10.0 PSF	DRW	HCUSR215 07176028
BC LL	0.0 PSF	HC-ENG	DAB/WHK
TOT.LD.	40.0 PSF	SEQN-	183059
DUR.FAC.	1.25	FROM	CDM

THIS DWG PREPARED FROM COMPUTER INPUT (LOADS & DIMENSIONS) SUBMITTED BY TRUSS MFR.

Top chord 2x4 SP #2 N
Bot chord 2x4 SP #2 N
Webs 2x4 SP #2 N

Wind reactions based on MWFRS pressures.

Deflection meets L/240 live and L/180 total load.

The overall height of this truss excluding overhang is 10-3-5.

See DWGS BCFILLER1106 for bottom chord (BC) filler details.
Latrally brace BC above filler @24" O.C. (or as designed)
Including a brace on BC directly above both ends of filler
(if no rigid diaphragm exists at that point).

110 mph wind, 15.00 ft mean hgt, ASCE 7-02, CLOSED bldg, not located within 4.50 ft from roof edge, CAT II, EXP B, wind TC DL=5.0 psf, wind BC DL=5.0 psf. Iw=1.00 GCpi(+/-)=0.18

Right end vertical not exposed to wind pressure.

H = recommended connection based on manufacturer tested capacities and calculations. Conditions may exist that require different connections than indicated. Refer to manufacturer publication for additional information.

In lieu of structural panels use purlins to brace all flat TC @ 24" OC.

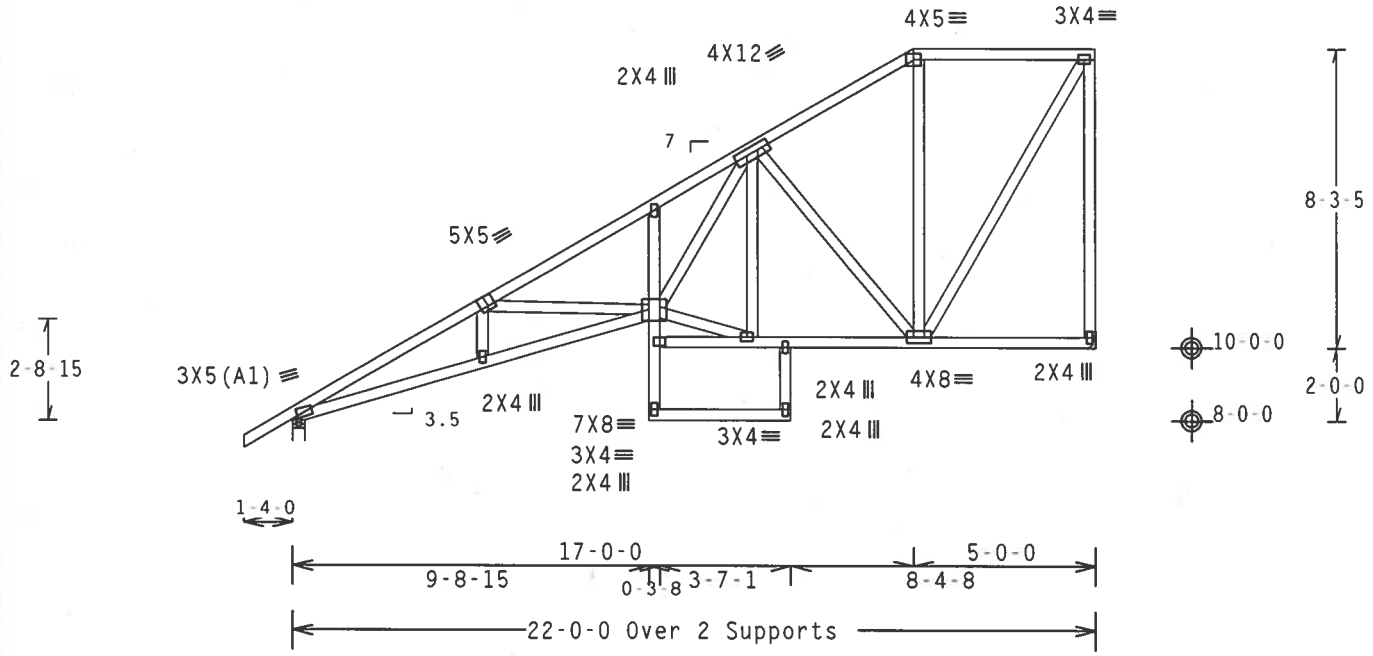

R=1021 U=39 W=4"

R=907 U=136 H=Simpson LUS26
w/ (3) 10d Common, 0.148"x3.0" nails in Truss
w/ (4) 10d Common, 0.148"x3.0" nails in Girder
Girder is (2)2X8 min. So.Pine

Design Crit: TPI-2002(STD)/FBC

PLT TYP. Wave Cq/RT=1.00(1.25)/10(0) 7.36.0424 QTY:1 FL/-/5/-/-/R/- Scale =.1875"/Ft.

ALPINE
ITW Building Components Group, Inc.
Haines City, FL 33844

WARNING TRUSSES REQUIRE EXTREME CARE IN FABRICATION, HANDLING, SHIPPING, INSTALLING AND BRACING. REFER TO BCSI (BUILDING COMPONENT SAFETY INFORMATION), PUBLISHED BY TPI (TRUSS PLATE INSTITUTE, 218 NORTH LEE STREET, SUITE 312, ALEXANDRIA, VA, 22314) AND WTCA (WOOD TRUSS COUNCIL OF AMERICA, 6300 ENTERPRISE LANE, MADISON, WI 53719) FOR SAFETY PRACTICES PRIOR TO PERFORMING THESE FUNCTIONS. UNLESS OTHERWISE INDICATED TOP CHORD SHALL HAVE PROPERLY ATTACHED STRUCTURAL PANELS AND BOTTOM CHORD SHALL HAVE A PROPERLY ATTACHED RIGID CEILING.

IMPORTANT FURNISH A COPY OF THIS DESIGN TO THE INSTALLATION CONTRACTOR. ITW BCG, INC. SHALL NOT BE RESPONSIBLE FOR ANY DEVIATION FROM THIS DESIGN; ANY FAILURE TO BUILD THE TRUSS IN CONFORMANCE WITH TPI; OR FABRICATING, HANDLING, SHIPPING, INSTALLING & BRACING OF TRUSSES.
DESIGN CONFORMS WITH APPLICABLE PROVISIONS OF NDS (NATIONAL DESIGN SPEC. BY AF&PA) AND TPI. ITW BCG CONNECTOR PLATES ARE MADE OF 20/18/16GA (W.H/SS/K) ASTM A653 GRADE 40/60 (W. K/H.SS) GALV. STEEL. APPLY PLATES TO EACH FACE OF TRUSS AND, UNLESS OTHERWISE LOCATED ON THIS DESIGN, POSITION PER DRAWINGS 160A-Z. ANY INSPECTION OF PLATES FOLLOWED BY (1) SHALL BE PER ANNEX A3 OF TPI1-2002 SEC.3. A SEAL ON THIS DRAWING INDICATES ACCEPTANCE OF PROFESSIONAL ENGINEERING RESPONSIBILITY SOLELY FOR THE TRUSS COMPONENT DESIGN SHOWN. THE SUITABILITY AND USE OF THIS COMPONENT FOR ANY BUILDING IS THE RESPONSIBILITY OF THE

JAMES F. COLLINS, JR. LICENSE No. 52212 STATE OF FLORIDA PROFESSIONAL ENGINEER

TC LL	20.0 PSF	REF	R215-- 72002
TC DL	10.0 PSF	DATE	06/25/07
BC DL	10.0 PSF	DRW	HCUSR215 07176029
BC LL	0.0 PSF	HC-ENG	DAB/WHK
TOT.LD.	40.0 PSF	SEQN-	183055
DUR.FAC.	1.25	FROM	CDM

THIS DWG PREPARED FROM COMPUTER INPUT (LOADS & DIMENSIONS) SUBMITTED BY TRUSS MFR.

Top chord 2x4 SP #2 N
Bot chord 2x4 SP #2 N
Webs 2x4 SP #2 N

Wind reactions based on MWFRS pressures.

The overall height of this truss excluding overhang is 10-2-15.

See DWGS BCFILLER1106 for bottom chord (BC) filler details.
Latrally brace BC above filler @24" O.C. (or as designed)
Including a brace on BC directly above both ends of filler
(if no rigid diaphragm exists at that point).

110 mph wind, 15.00 ft mean hgt, ASCE 7-02, CLOSED bldg, not located within 4.50 ft from roof edge, CAT II, EXP B, wind TC DL=5.0 psf, wind BC DL=5.0 psf. Iw=1.00 GCpi(+/-)=0.18

Right end vertical not exposed to wind pressure.

H = recommended connection based on manufacturer tested capacities and calculations. Conditions may exist that require different connections than indicated. Refer to manufacturer publication for additional information.

In lieu of structural panels use purlins to brace all flat TC @ 24" OC.

Deflection meets L/240 live and L/180 total load.

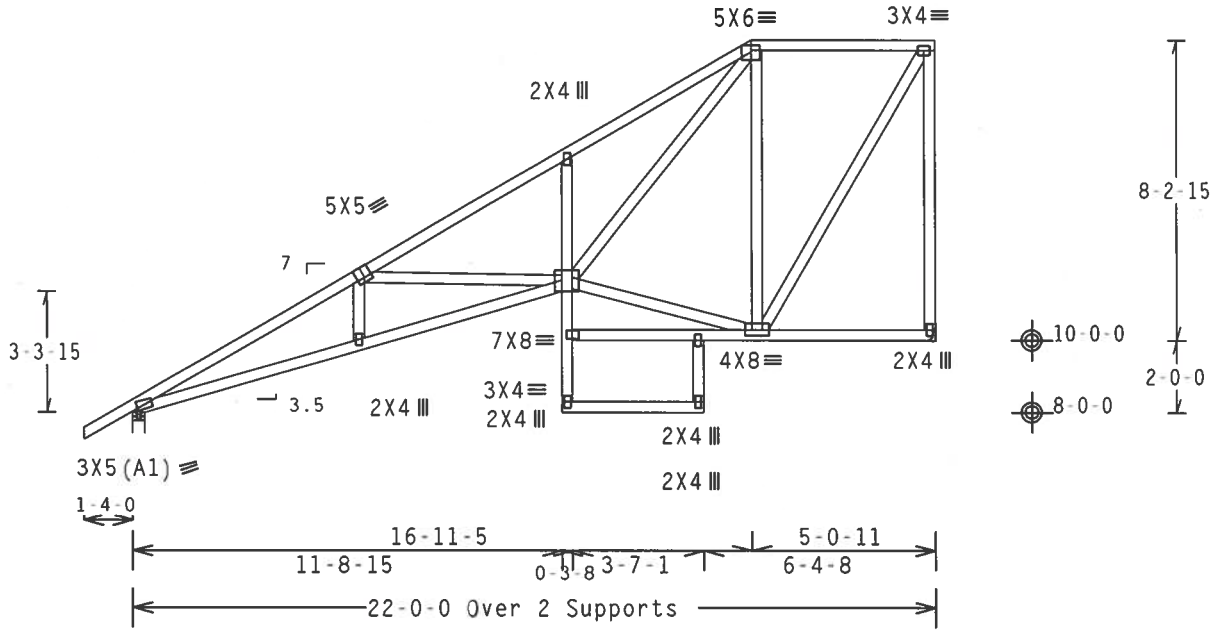

R=1022 U=39 W=4"

R=908 U=135 H=Simpson LUS26
w/ (3) 10d Common, 0.148"x3.0" nails in Truss
w/ (4) 10d Common, 0.148"x3.0" nails in Girder
Girder is (2)2X8 min. So.Pine

Design Crit: TPI-2002(STD)/FBC

PLT TYP. Wave | Cq/RT=1.00(1.25)/10(0) | 7.36.0424 | QTY:1 | FL/-/5/-/-/R/- | Scale =.1875"/Ft.

ALPINE
ITW Building Components Group, Inc.

WARNING TRUSSES REQUIRE EXTREME CARE IN FABRICATION, HANDLING, SHIPPING, INSTALLING AND BRACING. REFER TO BCSI (BUILDING COMPONENT SAFETY INFORMATION), PUBLISHED BY TPI (TRUSS PLATE INSTITUTE, 218 NORTH LEE STREET, SUITE 312, ALEXANDRIA, VA. 22314) AND WTCA (WOOD TRUSS COUNCIL OF AMERICA, 6300 ENTERPRISE LANE, MADISON, WI 53719) FOR SAFETY PRACTICES PRIOR TO PERFORMING THESE FUNCTIONS. UNLESS OTHERWISE INDICATED TOP CHORD SHALL HAVE PROPERLY ATTACHED STRUCTURAL PANELS AND BOTTOM CHORD SHALL HAVE A PROPERLY ATTACHED RIGID CEILING.

IMPORTANTFURNISH A COPY OF THIS DESIGN TO THE INSTALLATION CONTRACTOR. ITW BCG, INC. SHALL NOT BE RESPONSIBLE FOR ANY DEVIATION FROM THIS DESIGN; ANY FAILURE TO BUILD THE TRUSS IN CONFORMANCE WITH TPI; OR FABRICATING, HANDLING, SHIPPING, INSTALLING & BRACING OF TRUSSES.
DESIGN CONFORMS WITH APPLICABLE PROVISIONS OF NDS (NATIONAL DESIGN SPEC, BY AF&PA) AND TPI. ITW BCG CONNECTOR PLATES ARE MADE OF 20/18/16GA (W,H/SS/K) ASTM A653 GRADE 40/60 (W, K/H,SS) GALV. STEEL. APPLY PLATES TO EACH FACE OF TRUSS AND, UNLESS OTHERWISE LOCATED ON THIS DESIGN, POSITION PER DRAWINGS 160A-Z. ANY INSPECTION OF PLATES FOLLOWED BY (1) SHALL BE PER ANNEX A3 OF TPI1-2002 SEC.3. A SEAL ON THIS DRAWING INDICATES ACCEPTANCE OF PROFESSIONAL ENGINEERING RESPONSIBILITY SOLELY FOR THE TRUSS COMPONENT DESIGN SHOWN. THE SUITABILITY AND USE OF THIS COMPONENT FOR ANY BUILDING IS THE RESPONSIBILITY OF THE

JAMES F. COLLINS JR. LICENSE No. 52212 STATE OF FLORIDA PROFESSIONAL ENGINEER

TC LL	20.0 PSF	REF	R215-- 72003
TC DL	10.0 PSF	DATE	06/25/07
BC DL	10.0 PSF	DRW	HCUSR215 07176015
BC LL	0.0 PSF	HC-ENG	DAB/WHK
TOT.LD.	40.0 PSF	SEQN-	183050
DUR.FAC.	1.25	FROM	CDM

Top chord 2x4 SP #2 N
Bot chord 2x4 SP #2 N
Webs 2x4 SP #2 N

Wind reactions based on MWFRS pressures.

(A) Continuous lateral bracing equally spaced on member.

Deflection meets L/240 live and L/180 total load.

The overall height of this truss excluding overhang is 10-5-7.

See DWGS BCFILLER1106 for bottom chord (BC) filler details.
Latrally brace BC above filler @24" O.C. (or as designed)
Including a brace on BC directly above both ends of filler
(if no rigid diaphragm exists at that point).

110 mph wind, 15.00 ft mean hgt, ASCE 7-02, CLOSED bldg, not located within 4.50 ft from roof edge, CAT II, EXP B, wind TC DL=5.0 psf, wind BC DL=5.0 psf. Iw=1.00 GCpi(+/-)=0.18

Right end vertical not exposed to wind pressure.

H = recommended connection based on manufacturer tested capacities and calculations. Conditions may exist that require different connections than indicated. Refer to manufacturer publication for additional information.

In lieu of structural panels use purlins to brace all flat TC @ 24" OC.

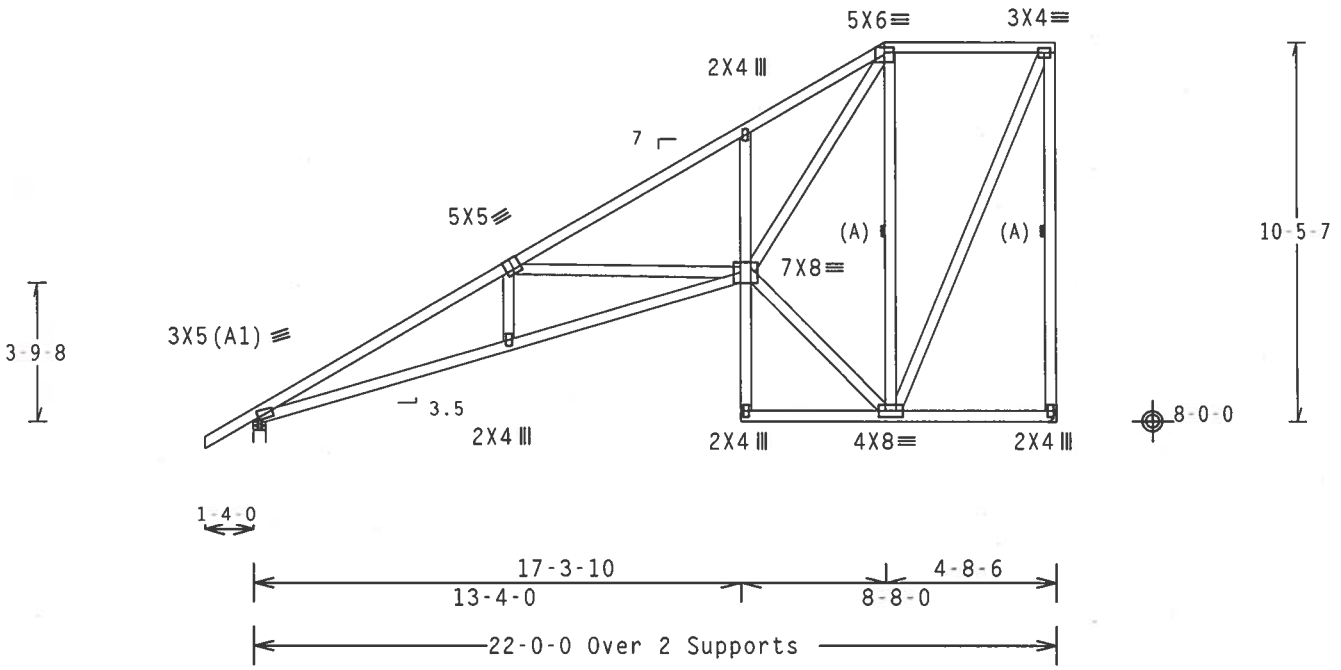

R=1022 U=36 W=4"

R=909 U=137 H=Simpson LUS26
w/ (3) 10d Common, 0.148"x3.0" nails in Truss
w/ (4) 10d Common, 0.148"x3.0" nails in Girder
Girder is (2)2X8 min. So.Pine

Design Crit: TPI-2002(STD)/FBC

PLT TYP. Wave | Cq/RT=1.00(1.25)/10(0) 7.36.0424 | QTY:1 | FL/-/5/-/-/R/- | Scale =.1875"/Ft.

ALPINE
ITW Building Components Group, Inc.

WARNING TRUSSES REQUIRE EXTREME CARE IN FABRICATION, HANDLING, SHIPPING, INSTALLING AND BRACING. REFER TO BCSI (BUILDING COMPONENT SAFETY INFORMATION), PUBLISHED BY TPI (TRUSS PLATE INSTITUTE, 218 NORTH LEE STREET, SUITE 312, ALEXANDRIA, VA, 22314) AND WTCA (WOOD TRUSS COUNCIL OF AMERICA, 6300 ENTERPRISE LANE, MADISON, WI 53719) FOR SAFETY PRACTICES PRIOR TO PERFORMING THESE FUNCTIONS. UNLESS OTHERWISE INDICATED TOP CHORD SHALL HAVE PROPERLY ATTACHED STRUCTURAL PANELS AND BOTTOM CHORD SHALL HAVE A PROPERLY ATTACHED RIGID CEILING.

IMPORTANTFURNISH A COPY OF THIS DESIGN TO THE INSTALLATION CONTRACTOR. ITW BCG, INC. SHALL NOT BE RESPONSIBLE FOR ANY DEVIATION FROM THIS DESIGN; ANY FAILURE TO BUILD THE TRUSS IN CONFORMANCE WITH TPI; OR FABRICATING, HANDLING, SHIPPING, INSTALLING & BRACING OF TRUSSES.
DESIGN CONFORMS WITH APPLICABLE PROVISIONS OF NDS (NATIONAL DESIGN SPEC. BY AF&PA) AND TPI. ITW BCG CONNECTOR PLATES ARE MADE OF 20/18/16GA (W,H/SS/K) ASTM A653 GRADE 40/60 (W, K/H,SS) GALV. STEEL. APPLY PLATES TO EACH FACE OF TRUSS AND, UNLESS OTHERWISE LOCATED ON THIS DESIGN, POSITION PER DRAWINGS 160A-Z. ANY INSPECTION OF PLATES FOLLOWED BY (i) SHALL BE PER ANNEX A3 OF TPI1-2002 SEC.3. A SEAL ON THIS DRAWING INDICATES ACCEPTANCE OF PROFESSIONAL ENGINEERING RESPONSIBILITY SOLELY FOR THE TRUSS COMPONENT DESIGN SHOWN. THE SUITABILITY AND USE OF THIS COMPONENT FOR ANY BUILDING IS THE RESPONSIBILITY OF THE

JAMES F. COLLINS JR. LICENSED No 52212 STATE OF FLORIDA PROFESSIONAL ENGINEER

TC LL	20.0 PSF	REF R215-- 72004
TC DL	10.0 PSF	DATE 06/25/07
BC DL	10.0 PSF	DRW HCUSR215 07176031
BC LL	0.0 PSF	HC-ENG DAB/WHK
TOT.LD.	40.0 PSF	SEQN- 183039
DUR.FAC.	1.25	FROM CDM

Top chord 2x4 SP #2 N
Bot chord 2x4 SP #2 N
Webs 2x4 SP #2 N

Wind reactions based on MWFRS pressures.

Deflection meets L/240 live and L/180 total load.

The overall height of this truss excluding overhang is 9-3-7.

See DWGS BCFILLER1106 for bottom chord (BC) filler details.
Latrally brace BC above filler @24" O.C. (or as designed)
Including a brace on BC directly above both ends of filler
(if no rigid diaphragm exists at that point).

110 mph wind, 15.00 ft mean hgt, ASCE 7-02, CLOSED bldg, not located within 4.50 ft from roof edge, CAT II, EXP B, wind TC DL=5.0 psf, wind BC DL=5.0 psf. Iw=1.00 GCpi(+/-)=0.18

Right end vertical not exposed to wind pressure.

H = recommended connection based on manufacturer tested capacities and calculations. Conditions may exist that require different connections than indicated. Refer to manufacturer publication for additional information.

In lieu of structural panels use purlins to brace all flat TC @ 24" OC.

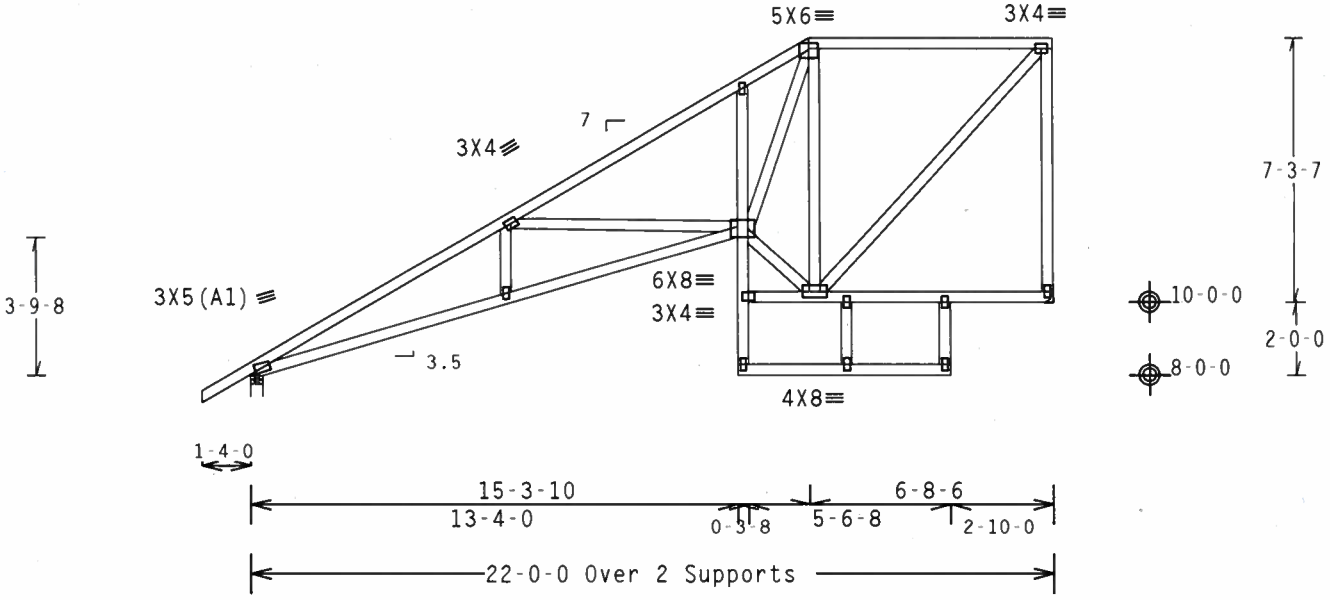

R=1022 U=48 W=4"

R=909 U=128 H=Simpson LUS26
w/ (3) 10d Common, 0.148"x3.0" nails in Truss
w/ (4) 10d Common, 0.148"x3.0" nails in Girder
Girder is (2)2X8 min. So.Pine

Note: All Plates Are 2X4 Except As Shown.

Design Crit: TPI-2002(STD)/FBC

PLT TYP. Wave Cq/RT=1.00(1.25)/10(0) 7.36.0424 QTY:1 FL/-/5/-/-/R/- Scale =.1875"/Ft.

ALPINE
ITW Building Components Group, Inc.

WARNING TRUSSES REQUIRE EXTREME CARE IN FABRICATION, HANDLING, SHIPPING, INSTALLING AND BRACING. REFER TO BCSI (BUILDING COMPONENT SAFETY INFORMATION), PUBLISHED BY TPI (TRUSS PLATE INSTITUTE, 218 NORTH LEE STREET, SUITE 312, ALEXANDRIA, VA, 22314) AND WTCA (WOOD TRUSS COUNCIL OF AMERICA, 6300 ENTERPRISE LANE, MADISON, WI 53719) FOR SAFETY PRACTICES PRIOR TO PERFORMING THESE FUNCTIONS. UNLESS OTHERWISE INDICATED TOP CHORD SHALL HAVE PROPERLY ATTACHED STRUCTURAL PANELS AND BOTTOM CHORD SHALL HAVE A PROPERLY ATTACHED RIGID CEILING.

IMPORTANTFURNISH A COPY OF THIS DESIGN TO THE INSTALLATION CONTRACTOR. ITW BCG, INC. SHALL NOT BE RESPONSIBLE FOR ANY DEVIATION FROM THIS DESIGN; ANY FAILURE TO BUILD THE TRUSS IN CONFORMANCE WITH TPI; OR FABRICATING, HANDLING, SHIPPING, INSTALLING & BRACING OF TRUSSES.
DESIGN CONFORMS WITH APPLICABLE PROVISIONS OF NDS (NATIONAL DESIGN SPEC. BY AF&PA) AND TPI. ITW BCG CONNECTOR PLATES ARE MADE OF 20/18/16GA (W,H/SS/K) ASTM A653 GRADE 40/60 (W, K/H,SS) GALV. STEEL. APPLY PLATES TO EACH FACE OF TRUSS AND, UNLESS OTHERWISE LOCATED ON THIS DESIGN, POSITION PER DRAWINGS 160A Z. ANY INSPECTION OF PLATES FOLLOWED BY (1) SHALL BE PER ANNEX A3 OF TPI1 2002 SEC.3. A SEAL ON THIS DRAWING INDICATES ACCEPTANCE OF PROFESSIONAL ENGINEERING RESPONSIBILITY SOLELY FOR THE TRUSS COMPONENT

JAMES F. COLLINS LICENSED No. 52212 STATE OF FLORIDA PROFESSIONAL ENGINEER

TC LL	20.0 PSF	REF	R215-- 72005
TC DL	10.0 PSF	DATE	06/25/07
BC DL	10.0 PSF	DRW	HCUSR215 07176021
BC LL	0.0 PSF	HC-ENG	DAB/WHK
TOT.LD.	40.0 PSF	SEQN-	183034
DUR.FAC.	1.25	FROM	CDM

THIS DWG PREPARED FROM COMPUTER INPUT (LOADS & DIMENSIONS) SUBMITTED BY TRUSS MFR.

Top chord 2x4 SP #2 N
Bot chord 2x4 SP #2 N
Webs 2x4 SP #2 N

Wind reactions based on MWFRS pressures.

Deflection meets L/240 live and L/180 total load.

The overall height of this truss excluding overhang is 8-1-7.

See DWGS BCFILLER1106 for bottom chord (BC) filler details.
Latrally brace BC above filler @24" O.C. (or as designed)
Including a brace on BC directly above both ends of filler
(if no rigid diaphragm exists at that point).

110 mph wind, 15.00 ft mean hgt, ASCE 7-02, CLOSED bldg, not located within 4.50 ft from roof edge, CAT II, EXP B, wind TC DL=5.0 psf, wind BC DL=5.0 psf. Iw=1.00 GCpi(+/-)=0.18

Right end vertical not exposed to wind pressure.

H = recommended connection based on manufacturer tested capacities and calculations. Conditions may exist that require different connections than indicated. Refer to manufacturer publication for additional information.

In lieu of structural panels use purlins to brace all flat TC @ 24" OC.

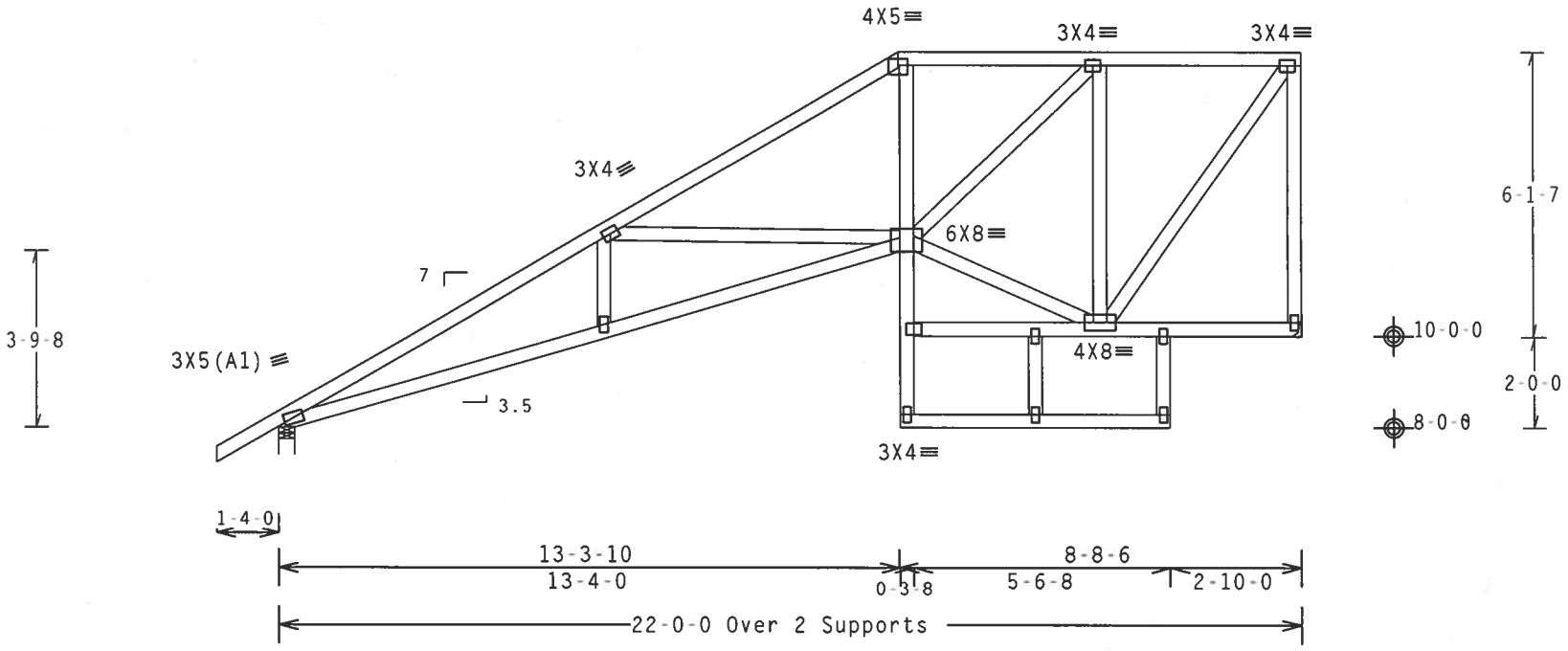

R=1022 U=60 W=4"

R=909 U=119 H=Simpson LUS26
w/ (3) 10d Common, 0.148"x3.0" nails in Truss
w/ (4) 10d Common, 0.148"x3.0" nails in Girder
Girder is (2)2X8 min. So.Pine

Note: All Plates Are 2X4 Except As Shown.

Design Crit: TPI-2002(STD)/FBC

PLT TYP. Wave Cq/RT=1.00(1.25)/10(0) 7.36.0424 13 QTY:1 FL/-/5/-/-/R/- Scale =.25"/Ft.

ALPINE
ITW Building Components Group, Inc.

WARNING TRUSSES REQUIRE EXTREME CARE IN FABRICATION, HANDLING, SHIPPING, INSTALLING AND BRACING. REFER TO BCSI (BUILDING COMPONENT SAFETY INFORMATION), PUBLISHED BY TPI (TRUSS PLATE INSTITUTE, 218 NORTH LEE STREET, SUITE 312, ALEXANDRIA, VA, 22314) AND WTCA (WOOD TRUSS COUNCIL OF AMERICA, 6300 ENTERPRISE LANE, MADISON, WI 53719) FOR SAFETY PRACTICES PRIOR TO PERFORMING THESE FUNCTIONS. UNLESS OTHERWISE INDICATED TOP CHORD SHALL HAVE PROPERLY ATTACHED STRUCTURAL PANELS AND BOTTOM CHORD SHALL HAVE A PROPERLY ATTACHED RIGID CEILING.

IMPORTANTFURNISH A COPY OF THIS DESIGN TO THE INSTALLATION CONTRACTOR. ITW BCG, INC. SHALL NOT BE RESPONSIBLE FOR ANY DEVIATION FROM THIS DESIGN; ANY FAILURE TO BUILD THE TRUSS IN CONFORMANCE WITH TPI; OR FABRICATING, HANDLING, SHIPPING, INSTALLING & BRACING OF TRUSSES.
DESIGN CONFORMS WITH APPLICABLE PROVISIONS OF NDS (NATIONAL DESIGN SPEC. BY AF&PA) AND TPI. ITW BCG CONNECTOR PLATES ARE MADE OF 20/18/16GA (W.H/SS/K) ASTM A653 GRADE 40/60 (W. K/H.SS) GALV. STEEL. APPLY PLATES TO EACH FACE OF TRUSS AND. UNLESS OTHERWISE LOCATED ON THIS DESIGN, POSITION PER DRAWINGS 160A-Z. ANY INSPECTION OF PLATES FOLLOWED BY (1) SHALL BE PER ANNEX A3 OF TPI1-2002 SEC.3. A SEAL ON THIS DRAWING INDICATES ACCEPTANCE OF PROFESSIONAL ENGINEERING RESPONSIBILITY SOLELY FOR THE TRUSS COMPONENT DESIGN SHOWN. THE SUITABILITY AND USE OF THIS COMPONENT FOR ANY BUILDING IS THE RESPONSIBILITY OF THE

JAMES E. COLLINS, JR. LICENSE No 52212 STATE OF FLORIDA PROFESSIONAL ENGINEER

TC LL	20.0 PSF	REF	R215-- 72006
TC DL	10.0 PSF	DATE	06/25/07
BC DL	10.0 PSF	DRW	HCUSR215 07176030
BC LL	0.0 PSF	HC-ENG	DAB/WHK
TOT.LD.	40.0 PSF	SEQN-	183030
DUR.FAC.	1.25	FROM	CDM

THIS DWG PREPARED FROM COMPUTER INPUT (LOADS & DIMENSIONS) SUBMITTED BY TRUSS MFR.

Top chord 2x4 SP #2 N
Bot chord 2x4 SP #2 N
Webs 2x4 SP #2 N

Wind reactions based on MWFRS pressures.

Deflection meets L/240 live and L/180 total load.

The overall height of this truss excluding overhang is 6-11-7.

See DWGS BCFILLER1106 for bottom chord (BC) filler details.
Latrally brace BC above filler @24" O.C. (or as designed)
Including a brace on BC directly above both ends of filler
(if no rigid diaphragm exists at that point).

110 mph wind, 15.00 ft mean hgt, ASCE 7-02, CLOSED bldg, not located within 4.50 ft from roof edge, CAT II, EXP B, wind TC DL=5.0 psf, wind BC DL=5.0 psf. Iw=1.00 GCpi(+/-)=0.18

Right end vertical not exposed to wind pressure.

H = recommended connection based on manufacturer tested capacities and calculations. Conditions may exist that require different connections than indicated. Refer to manufacturer publication for additional information.

In lieu of structural panels use purlins to brace all flat TC @ 24" OC.

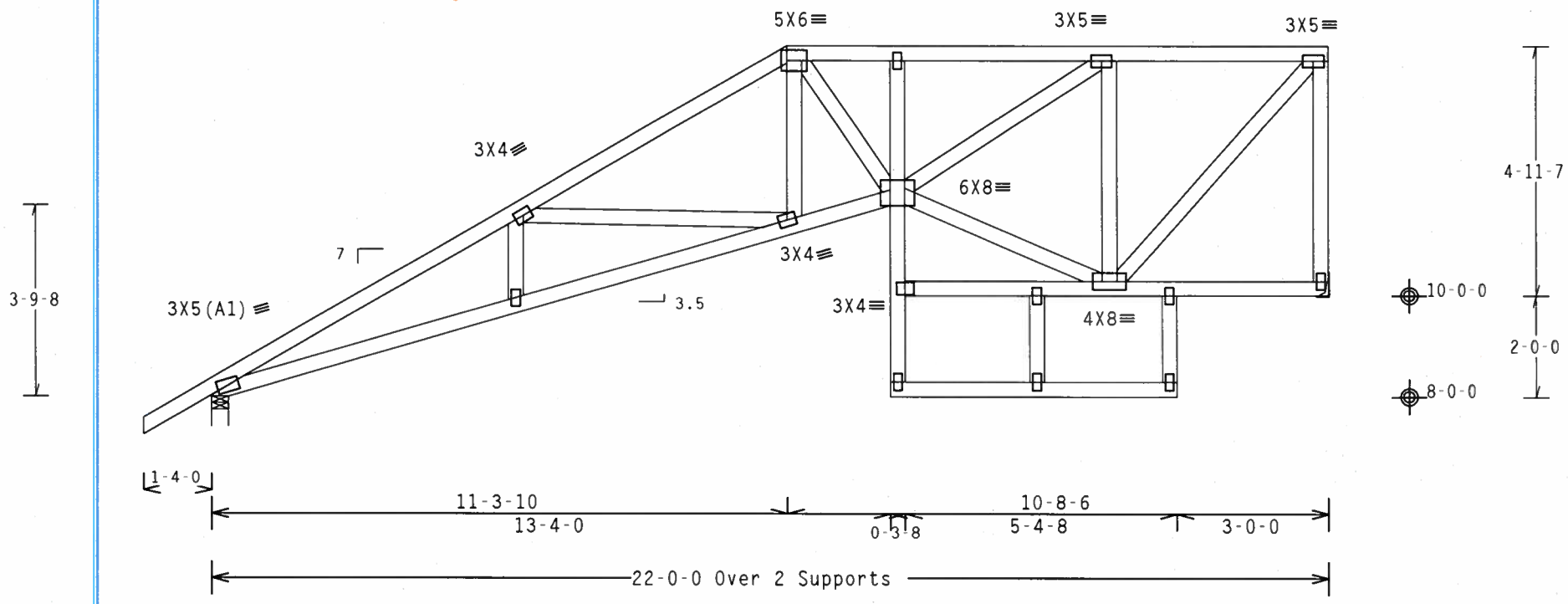

R=1022 U=70 W=4"

R=909 U=112 H=Simpson LUS26
w/ (3) 10d Common, 0.148"x3.0" nails in Truss
w/ (4) 10d Common, 0.148"x3.0" nails in Girder
Girder is (2)2X8 min. So.Pine

Note: All Plates Are 2X4 Except As Shown.

Design Crit: TPI-2002(STD)/FBC

PLT TYP. Wave Cq/RT=1.00(1.25)/10(0) 7.36.0424 QTY:1 FL/-/5/-/-/R/- Scale =.3125"/Ft.

ALPINE
ITW Building Components Group, Inc.

WARNING TRUSSES REQUIRE EXTREME CARE IN FABRICATION, HANDLING, SHIPPING, INSTALLING AND BRACING. REFER TO BCSI (BUILDING COMPONENT SAFETY INFORMATION), PUBLISHED BY TPI (TRUSS PLATE INSTITUTE, 218 NORTH LEE STREET, SUITE 312, ALEXANDRIA, VA, 22314) AND WTCA (WOOD TRUSS COUNCIL OF AMERICA, 6300 ENTERPRISE LANE, MADISON, WI 53719) FOR SAFETY PRACTICES PRIOR TO PERFORMING THESE FUNCTIONS. UNLESS OTHERWISE INDICATED TOP CHORD SHALL HAVE PROPERLY ATTACHED STRUCTURAL PANELS AND BOTTOM CHORD SHALL HAVE A PROPERLY ATTACHED RIGID CEILING.

IMPORTANTFURNISH A COPY OF THIS DESIGN TO THE INSTALLATION CONTRACTOR. ITW BCG, INC. SHALL NOT BE RESPONSIBLE FOR ANY DEVIATION FROM THIS DESIGN; ANY FAILURE TO BUILD THE TRUSS IN CONFORMANCE WITH TPI; OR FABRICATING, HANDLING, SHIPPING, INSTALLING & BRACING OF TRUSSES.
DESIGN CONFORMS WITH APPLICABLE PROVISIONS OF NDS (NATIONAL DESIGN SPEC. BY AF&PA) AND TPI. ITW BCG CONNECTOR PLATES ARE MADE OF 20/18/16GA (W.H/SS/K) ASTM A653 GRADE 40/60 (W. K/H.SS) GALV. STEEL. APPLY PLATES TO EACH FACE OF TRUSS AND. UNLESS OTHERWISE LOCATED ON THIS DESIGN, POSITION PER DRAWINGS 160A Z. ANY INSPECTION OF PLATES FOLLOWED BY (I) SHALL BE PER ANNEX A3 OF TPI1-2002 SEC.3. A SEAL ON THIS DRAWING INDICATES ACCEPTANCE OF PROFESSIONAL ENGINEERING RESPONSIBILITY SOLELY FOR THE TRUSS COMPONENT DESIGN SHOWN. THE SUITABILITY AND USE OF THIS COMPONENT FOR ANY BUILDING IS THE RESPONSIBILITY OF THE

JAMES F. COLLINS JR. LICENSE No 52212 STATE OF FLORIDA PROFESSIONAL ENGINEER

TC LL	20.0 PSF	REF	R215-- 72007
TC DL	10.0 PSF	DATE	06/25/07
BC DL	10.0 PSF	DRW	HCUSR215 07176032
BC LL	0.0 PSF	HC-ENG	DAB/WHK
TOT.LD.	40.0 PSF	SEQN-	183026
DUR.FAC.	1.25	FROM	CDM

Top chord 2x4 SP #2 N
Bot chord 2x4 SP #2 N
Webs 2x4 SP #2 N

Wind reactions based on MWFRS pressures.

Right end vertical not exposed to wind pressure.

Deflection meets L/240 live and L/180 total load.

The overall height of this truss excluding overhang is 6-9-5.

See DWGS BCFILLER1106 for bottom chord (BC) filler details.
Latrally brace BC above filler @24" O.C. (or as designed)
Including a brace on BC directly above both ends of filler
(if no rigid diaphragm exists at that point).

110 mph wind, 15.00 ft mean hgt, ASCE 7-02, CLOSED bldg, not located within 4.50 ft from roof edge, CAT II, EXP B, wind TC DL=5.0 psf, wind BC DL=5.0 psf. Iw=1.00 GCpi(+/-)=0.18

H = recommended connection based on manufacturer tested capacities and calculations. Conditions may exist that require different connections than indicated. Refer to manufacturer publication for additional information.

In lieu of structural panels use purlins to brace all flat TC @ 24" OC.

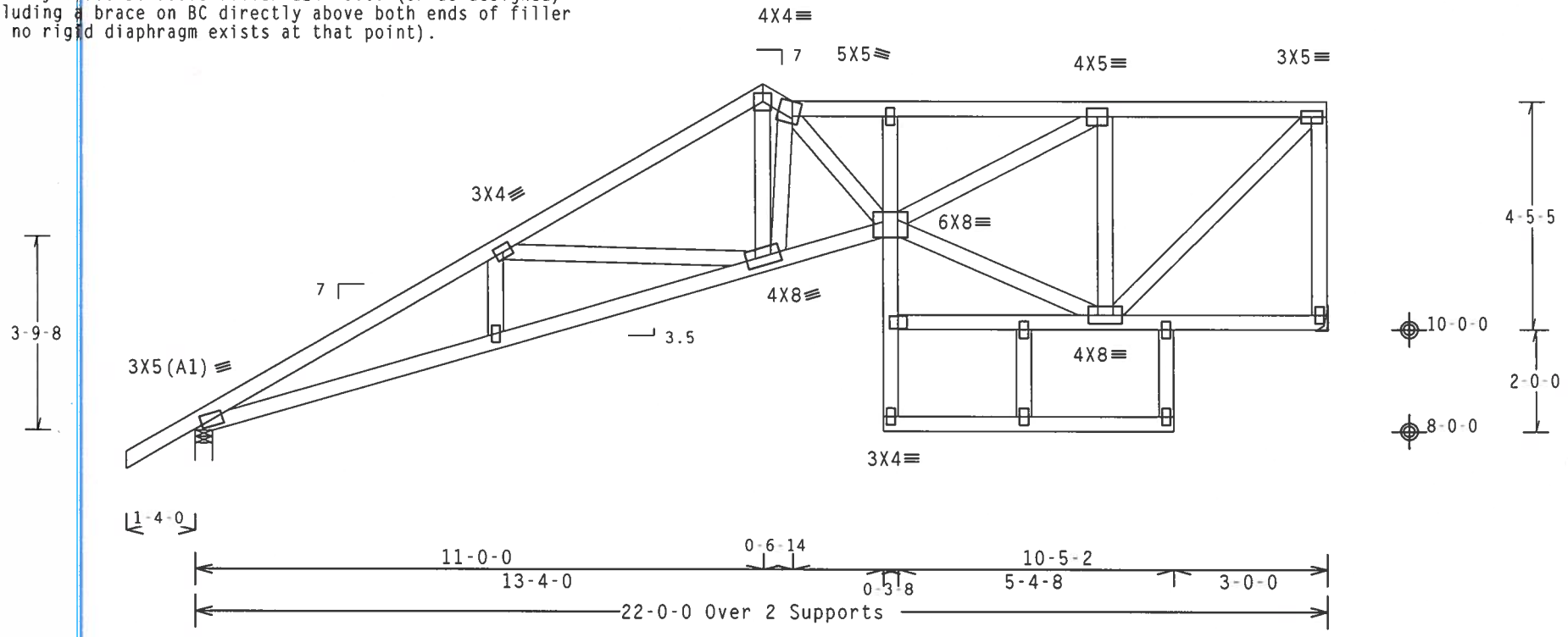

R=1022 U=72 W=4"

R=909 U=108 H=Simpson LUS26
w/ (3) 10d Common, 0.148"x3.0" nails in Truss
w/ (4) 10d Common, 0.148"x3.0" nails in Girder
Girder is (2)2X8 min. So.Pine

Note: All Plates Are 2X4 Except As Shown.

Design Crit: TPI-2002(STD)/FBC

PLT TYP. Wave Cq/RT=1.00(1.25)/10(0) 7.36.0424 10 QTY:1 FL/-/5/-/-/R/- Scale =.3125"/Ft.

ALPINE
ITW Building Components Group, Inc.

WARNING TRUSSES REQUIRE EXTREME CARE IN FABRICATION, HANDLING, SHIPPING, INSTALLING AND BRACING. REFER TO BCSI (BUILDING COMPONENT SAFETY INFORMATION), PUBLISHED BY TPI (TRUSS PLATE INSTITUTE, 218 NORTH LEE STREET, SUITE 312, ALEXANDRIA, VA, 22314) AND WTCA (WOOD TRUSS COUNCIL OF AMERICA, 6300 ENTERPRISE LANE, MADISON, WI 53719) FOR SAFETY PRACTICES PRIOR TO PERFORMING THESE FUNCTIONS. UNLESS OTHERWISE INDICATED TOP CHORD SHALL HAVE PROPERLY ATTACHED STRUCTURAL PANELS AND BOTTOM CHORD SHALL HAVE A PROPERLY ATTACHED RIGID CEILING.

IMPORTANTFURNISH A COPY OF THIS DESIGN TO THE INSTALLATION CONTRACTOR. ITW BCG, INC. SHALL NOT BE RESPONSIBLE FOR ANY DEVIATION FROM THIS DESIGN; ANY FAILURE TO BUILD THE TRUSS IN CONFORMANCE WITH TPI; OR FABRICATING, HANDLING, SHIPPING, INSTALLING & BRACING OF TRUSSES.
DESIGN CONFORMS WITH APPLICABLE PROVISIONS OF NDS (NATIONAL DESIGN SPEC, BY AF&PA) AND TPI. ITW BCG CONNECTOR PLATES ARE MADE OF 20/18/16GA (W,H/SS/K) ASTM A653 GRADE 40/60 (W, K/H,SS) GALV. STEEL. APPLY PLATES TO EACH FACE OF TRUSS AND, UNLESS OTHERWISE LOCATED ON THIS DESIGN, POSITION PER DRAWINGS 160A Z. ANY INSPECTION OF PLATES FOLLOWED BY (1) SHALL BE PER ANNEX A3 OF TPI1 2002 SEC.3. A SEAL ON THIS DRAWING INDICATES ACCEPTANCE OF PROFESSIONAL ENGINEERING RESPONSIBILITY SOLELY FOR THE TRUSS COMPONENT DESIGN SHOWN. THE SUITABILITY AND USE OF THIS COMPONENT FOR ANY BUILDING IS THE RESPONSIBILITY OF THE

JAMES F. COLLINS, JR. LICENSE No. 32212 STATE OF FLORIDA PROFESSIONAL ENGINEER

TC LL	20.0 PSF	REF	R215-- 72008
TC DL	10.0 PSF	DATE	06/25/07
BC DL	10.0 PSF	DRW	HCUSR215 07176023
BC LL	0.0 PSF	HC-ENG	DAB/WHK
TOT.LD.	40.0 PSF	SEQN-	183022
DUR.FAC.	1.25	FROM	CDM

THIS DWG PREPARED FROM COMPUTER INPUT (LOADS & DIMENSIONS) SUBMITTED BY TRUSS MFR.

Top chord 2x4 SP #2 N :T3 2x4 SP #2 Dense:
Bot chord 2x4 SP #2 N
Webs 2x4 SP #2 N

Wind reactions based on MWFRS pressures.

Right end vertical not exposed to wind pressure.

Deflection meets L/240 live and L/180 total load.

The overall height of this truss excluding overhang is 6-9-5.

See DWGS BCFILLER1106 for bottom chord (BC) filler details.
Latrally brace BC above filler @24" O.C. (or as designed)
Including a brace on BC directly above both ends of filler
(if no rigid diaphragm exists at that point).

110 mph wind, 15.00 ft mean hgt, ASCE 7-02, CLOSED bldg, not located within 4.50 ft from roof edge, CAT II, EXP B, wind TC DL=5.0 psf, wind BC DL=5.0 psf. Iw=1.00 GCpi(+/-)=0.18

Calculated horizontal deflection is 0.34" due to live load and 0.36" due to dead load.

H = recommended connection based on manufacturer tested capacities and calculations. Conditions may exist that require different connections than indicated. Refer to manufacturer publication for additional information.

In lieu of structural panels use purlins to brace all flat TC @ 24" OC.

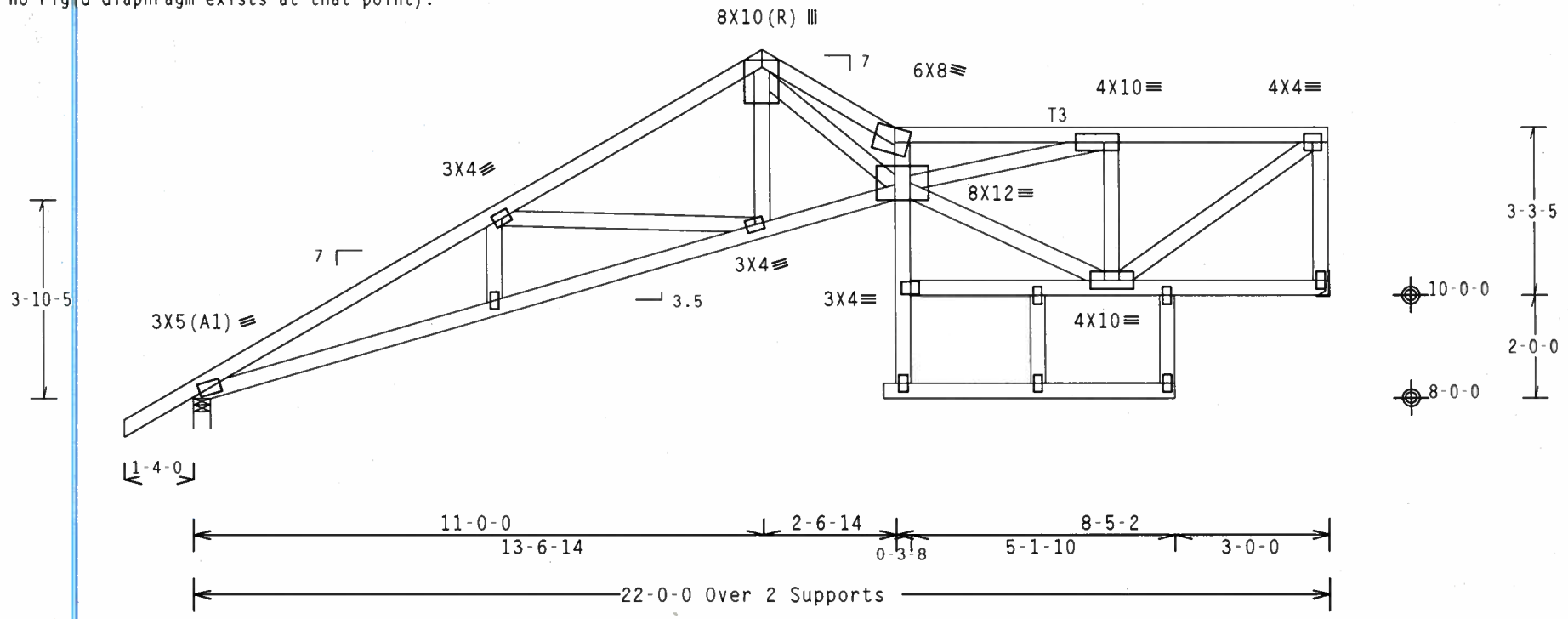

R=1022 U=78 W=4"

R=909 U=99 H=Simpson LUS26
w/ (3) 10d Common, 0.148"x3.0" nails in Truss
w/ (4) 10d Common, 0.148"x3.0" nails in Girder
Girder is (2)2X8 min. So.Pine

Note: All Plates Are 2X4 Except As Shown.

Design Crit: TPI-2002(STD)/FBC

PLT TYP. Wave Cq/RT=1.00(1.25)/10(0) 7.36.0424 QTY:1 FL/-/5/-/-/R/- Scale =.3125"/Ft.

ALPINE
ITW Building Components Group, Inc.

WARNING TRUSSES REQUIRE EXTREME CARE IN FABRICATION, HANDLING, SHIPPING, INSTALLING AND BRACING. REFER TO BCSI (BUILDING COMPONENT SAFETY INFORMATION), PUBLISHED BY TPI (TRUSS PLATE INSTITUTE, 218 NORTH LEE STREET, SUITE 312, ALEXANDRIA, VA. 22314) AND WTCA (WOOD TRUSS COUNCIL OF AMERICA, 6300 ENTERPRISE LANE, MADISON, WI 53719) FOR SAFETY PRACTICES PRIOR TO PERFORMING THESE FUNCTIONS. UNLESS OTHERWISE INDICATED TOP CHORD SHALL HAVE PROPERLY ATTACHED STRUCTURAL PANELS AND BOTTOM CHORD SHALL HAVE A PROPERLY ATTACHED RIGID CEILING.

IMPORTANTFURNISH A COPY OF THIS DESIGN TO THE INSTALLATION CONTRACTOR. ITW BCG, INC. SHALL NOT BE RESPONSIBLE FOR ANY DEVIATION FROM THIS DESIGN; ANY FAILURE TO BUILD THE TRUSS IN CONFORMANCE WITH TPI; OR FABRICATING, HANDLING, SHIPPING, INSTALLING & BRACING OF TRUSSES.
DESIGN CONFORMS WITH APPLICABLE PROVISIONS OF NDS (NATIONAL DESIGN SPEC. BY AF&PA) AND TPI. ITW BCG CONNECTOR PLATES ARE MADE OF 20/18/16GA (W,H/SS/K) ASTM A653 GRADE 40/60 (W, K/H,SS) GALV. STEEL. APPLY PLATES TO EACH FACE OF TRUSS AND, UNLESS OTHERWISE LOCATED ON THIS DESIGN, POSITION PER DRAWINGS 160A Z. ANY INSPECTION OF PLATES FOLLOWED BY (1) SHALL BE PER ANNEX A3 OF TPI1 2002 SEC.3. A SEAL ON THIS DRAWING INDICATES ACCEPTANCE OF PROFESSIONAL ENGINEERING RESPONSIBILITY SOLELY FOR THE TRUSS COMPONENT

JAMES F. COLLINS JR. LICENSE No. 52212 STATE OF FLORIDA PROFESSIONAL ENGINEER

TC LL	20.0 PSF	REF	R215-- 72009
TC DL	10.0 PSF	DATE	06/25/07
BC DL	10.0 PSF	DRW	HCUSR215 07176022
BC LL	0.0 PSF	HC-ENG	DAB/WHK
TOT.LD.	40.0 PSF	SEQN-	183018
DUR.FAC.	1.25	FROM	CDM

THIS DWG PREPARED FROM COMPUTER INPUT (LOADS & DIMENSIONS) SUBMITTED BY TRUSS MFR.

Top chord 2x4 SP #2 N
Bot chord 2x4 SP #2 N
Webs 2x4 SP #2 N

Wind reactions based on MWFRS pressures.

Right end vertical not exposed to wind pressure.

Deflection meets L/240 live and L/180 total load.

The overall height of this truss excluding overhang is 6-9-5.

See DWGS BCFILLER1106 for bottom chord (BC) filler details.
Latrally brace BC above filler @24" O.C. (or as designed)
Including a brace on BC directly above both ends of filler
(if no rigid diaphragm exists at that point).

110 mph wind, 15.00 ft mean hgt, ASCE 7-02, CLOSED bldg, not located within 4.50 ft from roof edge, CAT II, EXP B, wind TC DL=5.0 psf, wind BC DL=5.0 psf. Iw=1.00 GCpi(+/-)=0.18

Calculated horizontal deflection is 0.24" due to live load and 0.25" due to dead load.

H = recommended connection based on manufacturer tested capacities and calculations. Conditions may exist that require different connections than indicated. Refer to manufacturer publication for additional information.

In lieu of structural panels use purlins to brace all flat TC @ 24" OC.

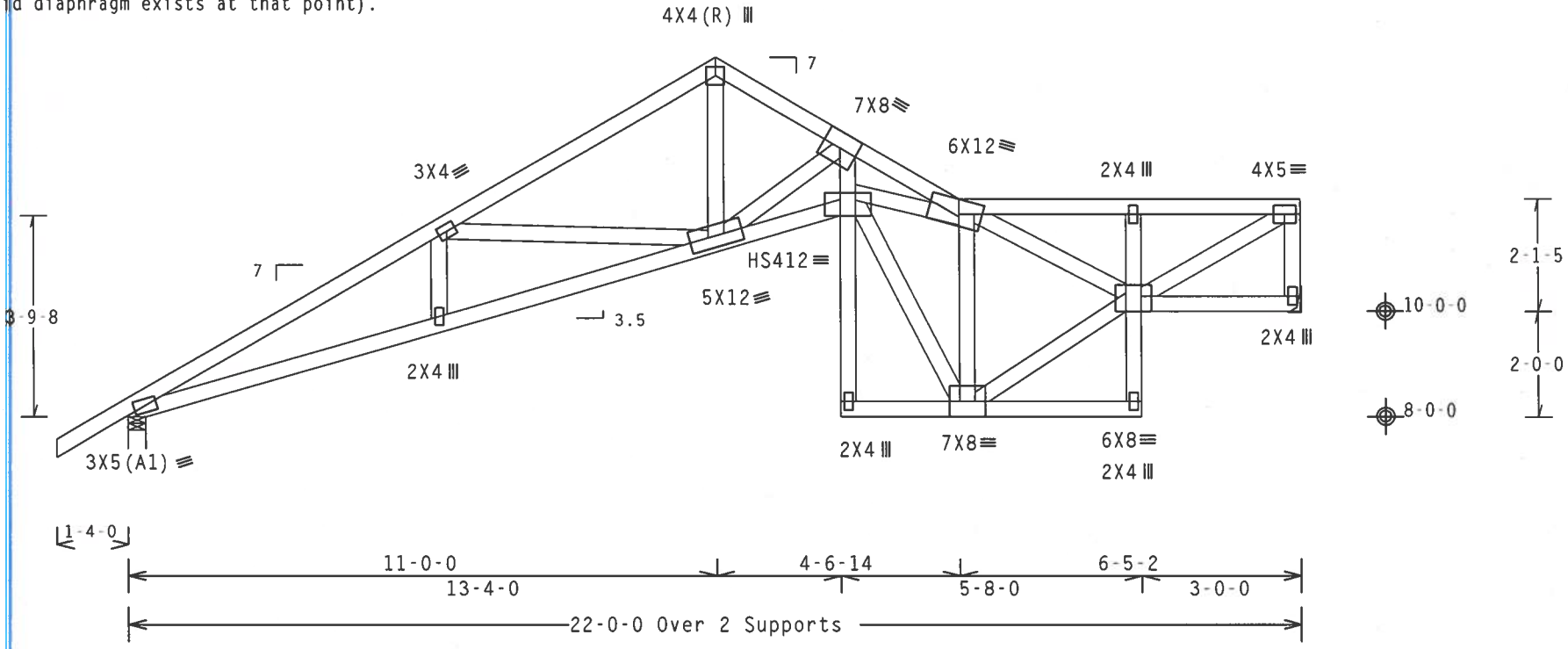

R=1022 U=82 W=4"

R=909 U=90 H=Simpson LUS26
w/ (3) 10d Common, 0.148"x3.0" nails in Truss
w/ (4) 10d Common, 0.148"x3.0" nails in Girder
Girder is (2)2X8 min. So.Pine

Design Crit: TPI-2002(STD)/FBC

PLT TYP. 20 Gauge HS,Wave Cq/RT=1.00(1.25)/10(0) 7.36.0424.12 QTY:1 FL/-/5/-/-/R/- Scale =.3125"/Ft.

ALPINE
ITW Building Components Group, Inc.

WARNING TRUSSES REQUIRE EXTREME CARE IN FABRICATION, HANDLING, SHIPPING, INSTALLING AND BRACING. REFER TO BCSI (BUILDING COMPONENT SAFETY INFORMATION), PUBLISHED BY TPI (TRUSS PLATE INSTITUTE, 218 NORTH LEE STREET, SUITE 312, ALEXANDRIA, VA, 22314) AND WTCA (WOOD TRUSS COUNCIL OF AMERICA, 6300 ENTERPRISE LANE, MADISON, WI 53719) FOR SAFETY PRACTICES PRIOR TO PERFORMING THESE FUNCTIONS. UNLESS OTHERWISE INDICATED TOP CHORD SHALL HAVE PROPERLY ATTACHED STRUCTURAL PANELS AND BOTTOM CHORD SHALL HAVE A PROPERLY ATTACHED RIGID CEILING.

IMPORTANTFURNISH A COPY OF THIS DESIGN TO THE INSTALLATION CONTRACTOR. ITW BCG, INC. SHALL NOT BE RESPONSIBLE FOR ANY DEVIATION FROM THIS DESIGN; ANY FAILURE TO BUILD THE TRUSS IN CONFORMANCE WITH TPI; OR FABRICATING, HANDLING, SHIPPING, INSTALLING & BRACING OF TRUSSES. DESIGN CONFORMS WITH APPLICABLE PROVISIONS OF NDS (NATIONAL DESIGN SPEC. BY AF&PA) AND TPI. ITW BCG CONNECTOR PLATES ARE MADE OF 20/18/16GA (W,H/SS/K) ASTM A653 GRADE 40/60 (W, K/H,SS) GALV. STEEL. APPLY PLATES TO EACH FACE OF TRUSS AND, UNLESS OTHERWISE LOCATED ON THIS DESIGN, POSITION PER DRAWINGS 160A-Z. ANY INSPECTION OF PLATES FOLLOWED BY (I) SHALL BE PER ANNEX A3 OF TPI1-2002 SEC.3. A SEAL ON THIS DRAWING INDICATES ACCEPTANCE OF PROFESSIONAL ENGINEERING RESPONSIBILITY SOLELY FOR THE TRUSS COMPONENT DESIGN SHOWN. THE SUITABILITY AND USE OF THIS COMPONENT FOR ANY BUILDING IS THE RESPONSIBILITY OF THE

JAMES F. COLLINS, JR. LICENSE No. 52212 STATE OF FLORIDA PROFESSIONAL ENGINEER

TC LL	20.0 PSF	REF R215-- 72010
TC DL	10.0 PSF	DATE 06/25/07
BC DL	10.0 PSF	DRW HCUSR215 07176020
BC LL	0.0 PSF	HC-ENG DAB/WHK
TOT.LD.	40.0 PSF	SEQN- 183012
DUR.FAC.	1.25	FROM CDM

Top chord 2x4 SP #2 N
Bot chord 2x4 SP #2 N
Webs 2x4 SP #2 N

Wind reactions based on MWFRS pressures.

In lieu of structural panels use purlins to brace all flat TC @ 24" OC.

The overall height of this truss excluding overhang is 6-9-5.

(**) 3 plate(s) require special positioning. Refer to scaled plate plot details for special positioning requirements.

110 mph wind, 15.00 ft mean hgt, ASCE 7-02, CLOSED bldg, not located within 4.50 ft from roof edge, CAT II, EXP B, wind TC DL=5.0 psf, wind BC DL=5.0 psf. Iw=1.00 GCpi(+/-)=0.18

Deflection meets L/240 live and L/180 total load.

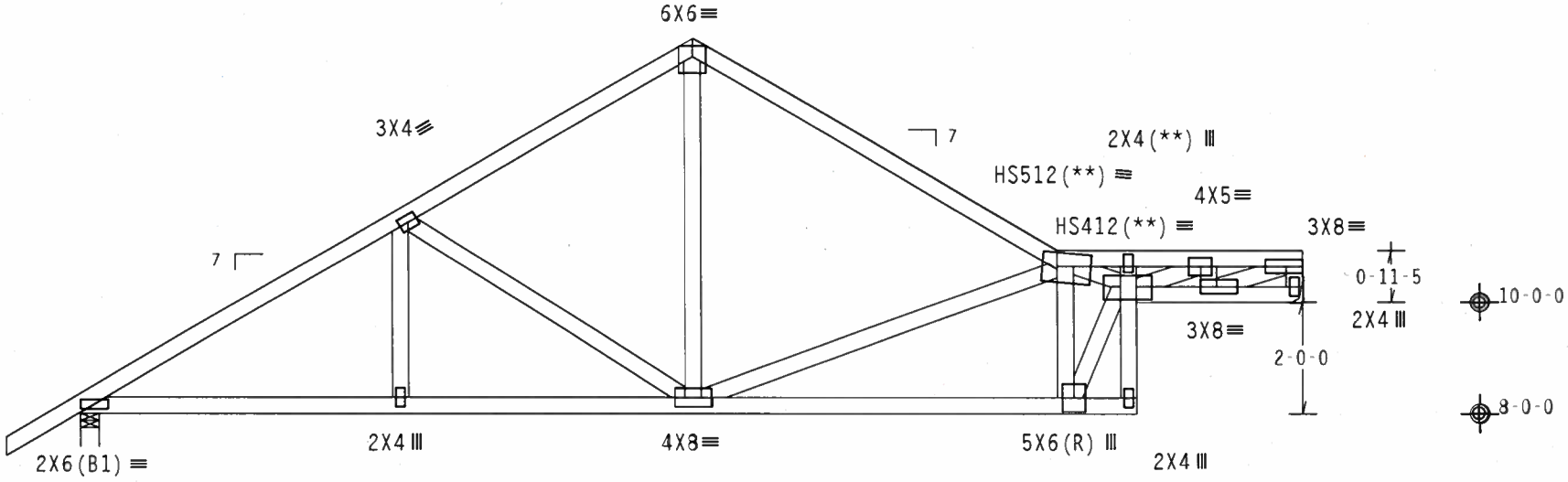

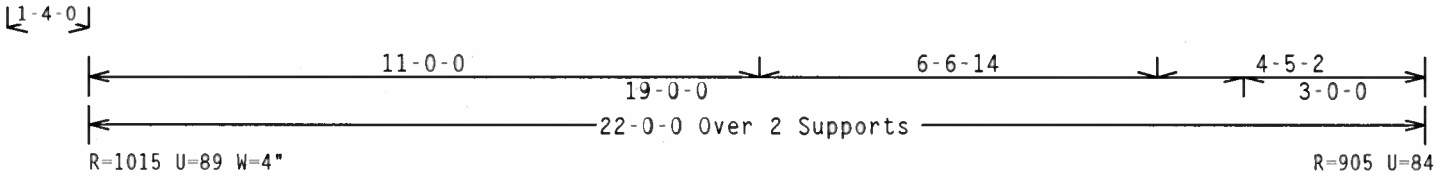

Design Crit: TPI-2002(STD)/FBC

PLT TYP. 20 Gauge HS,Wave Cq/RT=1.00(1.25)/10(0) 7.36.0424.12 QTY:1 FL/-/5/-/-/R/- Scale =.3125"/Ft.

ALPINE
ITW Building Components Group, Inc.

WARNING TRUSSES REQUIRE EXTREME CARE IN FABRICATION, HANDLING, SHIPPING, INSTALLING AND BRACING. REFER TO BCSI (BUILDING COMPONENT SAFETY INFORMATION), PUBLISHED BY TPI (TRUSS PLATE INSTITUTE, 218 NORTH LEE STREET, SUITE 312, ALEXANDRIA, VA, 22314) AND WTCA (WOOD TRUSS COUNCIL OF AMERICA, 6300 ENTERPRISE LANE, MADISON, WI 53719) FOR SAFETY PRACTICES PRIOR TO PERFORMING THESE FUNCTIONS. UNLESS OTHERWISE INDICATED TOP CHORD SHALL HAVE PROPERLY ATTACHED STRUCTURAL PANELS AND BOTTOM CHORD SHALL HAVE A PROPERLY ATTACHED RIGID CEILING.

IMPORTANTFURNISH A COPY OF THIS DESIGN TO THE INSTALLATION CONTRACTOR. ITW BCG, INC. SHALL NOT BE RESPONSIBLE FOR ANY DEVIATION FROM THIS DESIGN; ANY FAILURE TO BUILD THE TRUSS IN CONFORMANCE WITH TPI; OR FABRICATING, HANDLING, SHIPPING, INSTALLING & BRACING OF TRUSSES.
DESIGN CONFORMS WITH APPLICABLE PROVISIONS OF NDS (NATIONAL DESIGN SPEC. BY AF&PA) AND TPI. ITW BCG CONNECTOR PLATES ARE MADE OF 20/18/16GA (W.H/SS/K) ASTM A653 GRADE 40/60 (W. K/H.SS) GALV. STEEL. APPLY PLATES TO EACH FACE OF TRUSS AND, UNLESS OTHERWISE LOCATED ON THIS DESIGN, POSITION PER DRAWINGS 160A-Z. ANY INSPECTION OF PLATES FOLLOWED BY (1) SHALL BE PER ANNEX A3 OF TPI1-2002 SEC.3. A SEAL ON THIS DRAWING INDICATES ACCEPTANCE OF PROFESSIONAL ENGINEERING RESPONSIBILITY SOLELY FOR THE TRUSS COMPONENT DESIGN SHOWN. THE SUITABILITY AND USE OF THIS COMPONENT FOR ANY BUILDING IS THE RESPONSIBILITY OF THE

JAMES F. COLLINS JR. LICENSED No. 52212 STATE OF FLORIDA PROFESSIONAL ENGINEER

TC LL	20.0 PSF	REF R215-- 72011
TC DL	10.0 PSF	DATE 06/25/07
BC DL	10.0 PSF	DRW HCUSR215 07176046
BC LL	0.0 PSF	HC-ENG WHK/WHK
TOT.LD.	40.0 PSF	SEQN- 184523
DUR.FAC.	1.25	FROM CDM

THIS DWG PREPARED FROM COMPUTER INPUT (LOADS & DIMENSIONS) SUBMITTED BY TRUSS MFR.

Top chord 2x4 SP #2 N
Bot chord 2x4 SP #2 N
Webs 2x4 SP #2 N

Wind reactions based on MWFRS pressures.

The overall height of this truss excluding overhang is 6-9-5.

110 mph wind, 15.00 ft mean hgt, ASCE 7-02, CLOSED bldg, not located within 4.50 ft from roof edge, CAT II, EXP B, wind TC DL=5.0 psf, wind BC DL=5.0 psf. Iw=1.00 GCpi(+/-)=0.18

Deflection meets L/240 live and L/180 total load.

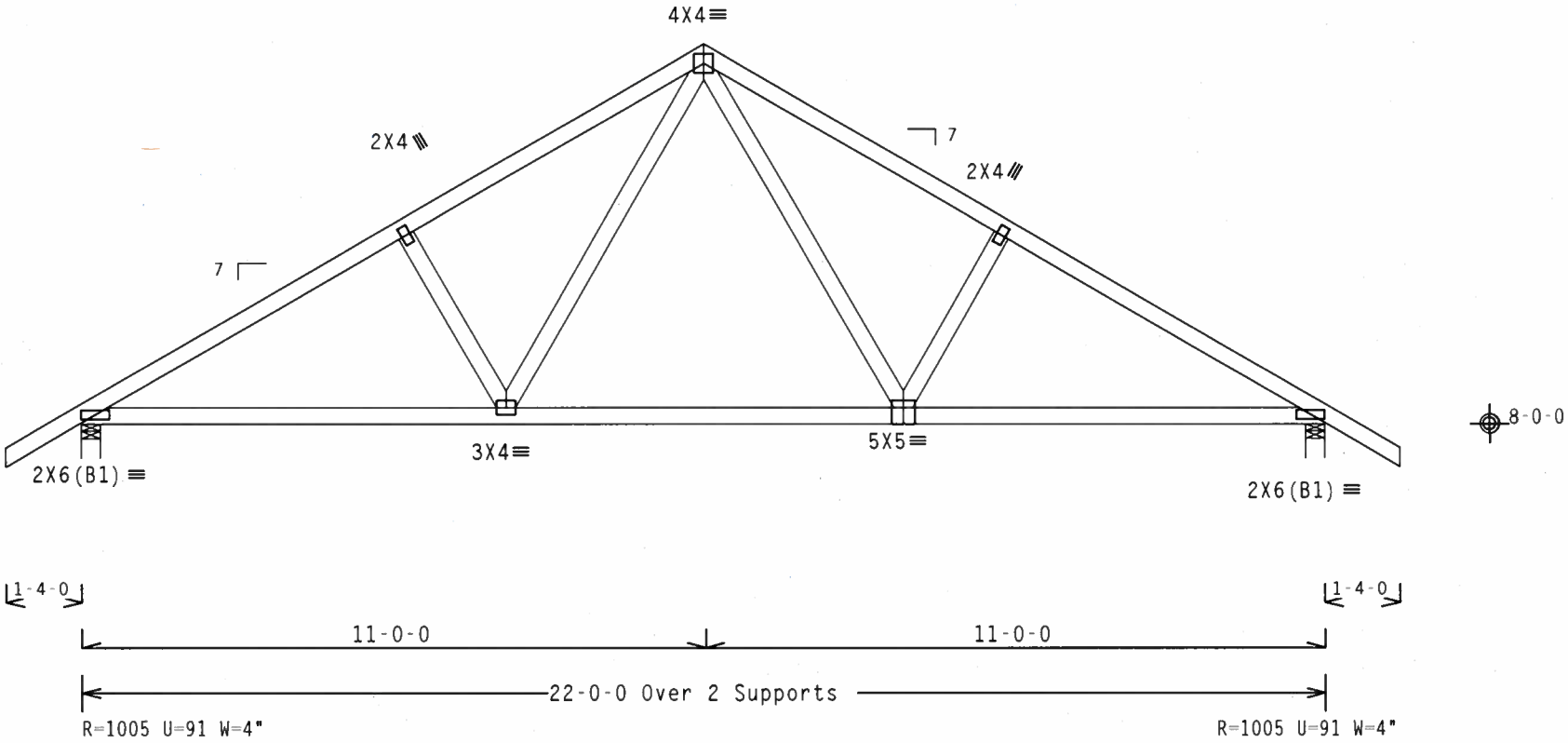

Design Crit: TPI-2002(STD)/FBC

PLT TYP. Wave | Cq/RT=1.00(1.25)/10(0) 7.36.0424 | QTY:1 | FL/-/5/-/-/R/- | Scale =.3125"/Ft.

ALPINE
ITW Building Components Group, Inc.

WARNING TRUSSES REQUIRE EXTREME CARE IN FABRICATION, HANDLING, SHIPPING, INSTALLING AND BRACING. REFER TO BCSI (BUILDING COMPONENT SAFETY INFORMATION), PUBLISHED BY TPI (TRUSS PLATE INSTITUTE, 218 NORTH LEE STREET, SUITE 312, ALEXANDRIA, VA, 22314) AND WTCA (WOOD TRUSS COUNCIL OF AMERICA, 6300 ENTERPRISE LANE, MADISON, WI 53719) FOR SAFETY PRACTICES PRIOR TO PERFORMING THESE FUNCTIONS. UNLESS OTHERWISE INDICATED TOP CHORD SHALL HAVE PROPERLY ATTACHED STRUCTURAL PANELS AND BOTTOM CHORD SHALL HAVE A PROPERLY ATTACHED RIGID CEILING.

IMPORTANTFURNISH A COPY OF THIS DESIGN TO THE INSTALLATION CONTRACTOR. ITW BCG, INC. SHALL NOT BE RESPONSIBLE FOR ANY DEVIATION FROM THIS DESIGN; ANY FAILURE TO BUILD THE TRUSS IN COMFORMANCE WITH TPI; OR FABRICATING, HANDLING, SHIPPING, INSTALLING & BRACING OF TRUSSES.
DESIGN CONFORMS WITH APPLICABLE PROVISIONS OF NDS (NATIONAL DESIGN SPEC, BY AF&PA) AND TPI. ITW BCG CONNECTOR PLATES ARE MADE OF 20/18/16GA (W,H/SS/K) ASTM A653 GRADE 40/60 (W, K/H,SS) GALV. STEEL. APPLY PLATES TO EACH FACE OF TRUSS AND, UNLESS OTHERWISE LOCATED ON THIS DESIGN, POSITION PER DRAWINGS 160A-Z. ANY INSPECTION OF PLATES FOLLOWED BY (1) SHALL BE PER ANNEX A3 OF TPI1 2002 SEC.3. A SEAL ON THIS DRAWING INDICATES ACCEPTANCE OF PROFESSIONAL ENGINEERING RESPONSIBILITY SOLELY FOR THE TRUSS COMPONENT DESIGN SHOWN. THE SUITABILITY AND USE OF THIS COMPONENT FOR ANY BUILDING IS THE RESPONSIBILITY OF THE

JAMES F. COLLINS, JR. LICENSED No. 52212 STATE OF FLORIDA PROFESSIONAL ENGINEER

TC LL	20.0 PSF	REF R215-- 72012
TC DL	10.0 PSF	DATE 06/25/07
BC DL	10.0 PSF	DRW HCUSR215 07176019
BC LL	0.0 PSF	HC-ENG DAB/WHK *
TOT.LD.	40.0 PSF	SEQN- 181543
DUR.FAC.	1.25	FROM CDM

Top chord 2x4 SP #2 N
Bot chord 2x4 SP #2 N
Webs 2x4 SP #2 N

Wind reactions based on MWFRS pressures.

Deflection meets L/240 live and L/180 total load.

110 mph wind, 15.00 ft mean hgt, ASCE 7-02, CLOSED bldg, not located within 4.50 ft from roof edge, CAT II, EXP B, wind TC DL=5.0 psf, wind BC DL=5.0 psf. Iw=1.00 GCpi(+/-)=0.18

In lieu of structural panels use purlins to brace all flat TC @ 24" OC.

The overall height of this truss excluding overhang is 5-7-5.

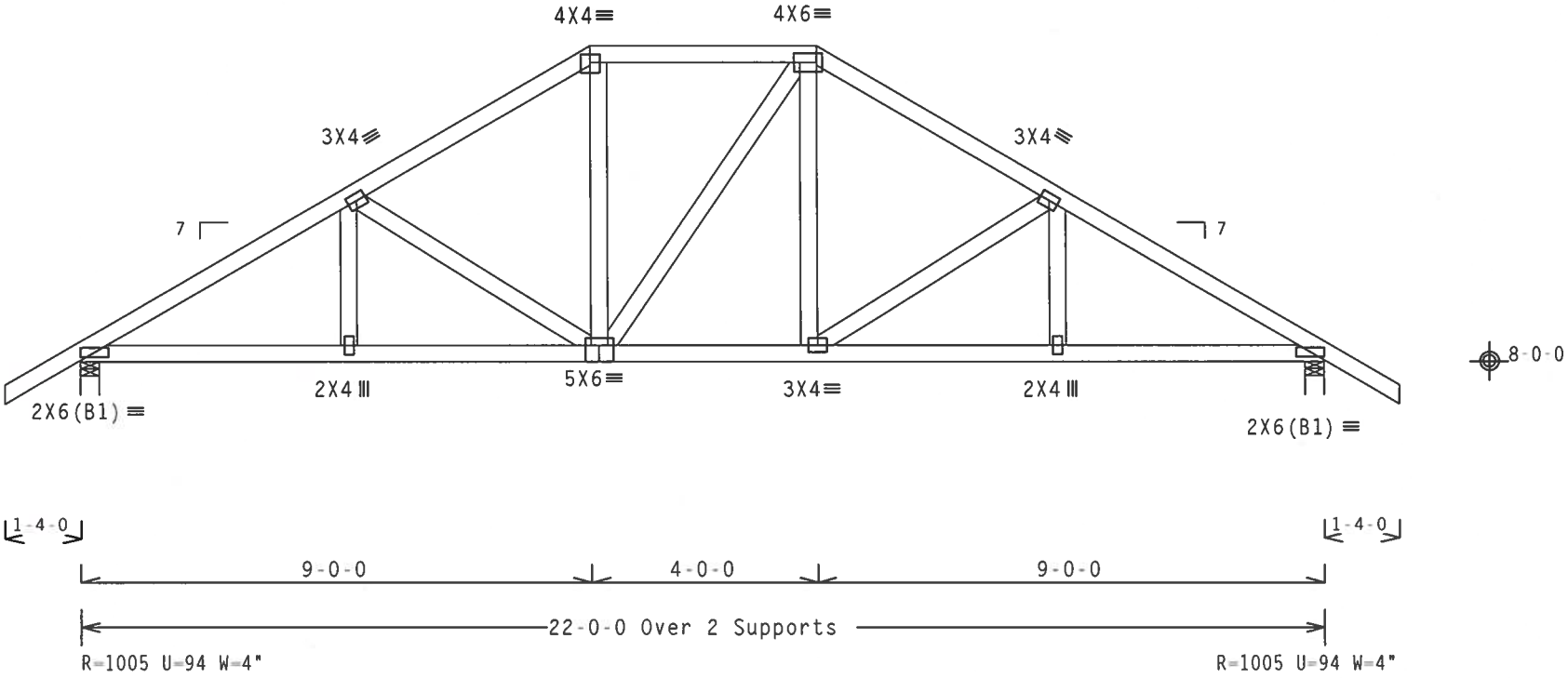

Design Crit: TPI-2002(STD)/FBC

PLT TYP. Wave | Cq/RT=1.00(1.25)/10(0) 7.36.0424 | QTY:1 | FL/-/5/-/-/R/- | Scale =.3125"/Ft.

ALPINE
ITW Building Components Group, Inc.

WARNING TRUSSES REQUIRE EXTREME CARE IN FABRICATION, HANDLING, SHIPPING, INSTALLING AND BRACING. REFER TO BCSI (BUILDING COMPONENT SAFETY INFORMATION), PUBLISHED BY TPI (TRUSS PLATE INSTITUTE, 218 NORTH LEE STREET, SUITE 312, ALEXANDRIA, VA, 22314) AND WTCA (WOOD TRUSS COUNCIL OF AMERICA, 6300 ENTERPRISE LANE, MADISON, WI 53719) FOR SAFETY PRACTICES PRIOR TO PERFORMING THESE FUNCTIONS. UNLESS OTHERWISE INDICATED TOP CHORD SHALL HAVE PROPERLY ATTACHED STRUCTURAL PANELS AND BOTTOM CHORD SHALL HAVE A PROPERLY ATTACHED RIGID CEILING.

IMPORTANTFURNISH A COPY OF THIS DESIGN TO THE INSTALLATION CONTRACTOR. ITW BCG, INC. SHALL NOT BE RESPONSIBLE FOR ANY DEVIATION FROM THIS DESIGN; ANY FAILURE TO BUILD THE TRUSS IN CONFORMANCE WITH TPI; OR FABRICATING, HANDLING, SHIPPING, INSTALLING & BRACING OF TRUSSES.
DESIGN CONFORMS WITH APPLICABLE PROVISIONS OF NDS (NATIONAL DESIGN SPEC, BY AF&PA) AND TPI. ITW BCG CONNECTOR PLATES ARE MADE OF 20/18/16GA (W,H/SS/K) ASTM A653 GRADE 40/60 (W, K/H,SS) GALV. STEEL. APPLY PLATES TO EACH FACE OF TRUSS AND, UNLESS OTHERWISE LOCATED ON THIS DESIGN, POSITION PER DRAWINGS 160A-Z. ANY INSPECTION OF PLATES FOLLOWED BY (1) SHALL BE PER ANNEX A3 OF TPI1 2002 SEC.3. A SEAL ON THIS DRAWING INDICATES ACCEPTANCE OF PROFESSIONAL ENGINEERING RESPONSIBILITY SOLELY FOR THE TRUSS COMPONENT DESIGN SHOWN. THE SUITABILITY AND USE OF THIS COMPONENT FOR ANY BUILDING IS THE RESPONSIBILITY OF THE

JAMES F. COLLINS JR. LICENSE No 52210 STATE OF FLORIDA PROFESSIONAL ENGINEER

TC LL	20.0 PSF	REF	R215-- 72013
TC DL	10.0 PSF	DATE	06/25/07
BC DL	10.0 PSF	DRW	HCUSR215 07176018
BC LL	0.0 PSF	HC-ENG	DAB/WHK *
TOT.LD.	40.0 PSF	SEQN-	181539
DUR.FAC.	1.25	FROM	CDM

THIS DWG PREPARED FROM COMPUTER INPUT (LOADS & DIMENSIONS) SUBMITTED BY TRUSS MFR.

Top chord 2x4 SP #2 N :T2 2x6 SP #2 N:
Bot chord 2x6 SP #2 N
Webs 2x4 SP #2 N

SPECIAL LOADS
------(LUMBER DUR.FAC.=1.25 / PLATE DUR.FAC.=1.25)

TC - From	63 PLF	at -1.33	to	63 PLF	at 7.00
TC - From	63 PLF	at 7.00	to	63 PLF	at 15.00
TC - From	63 PLF	at 15.00	to	63 PLF	at 23.33
BC - From	5 PLF	at -1.33	to	5 PLF	at 0.00
BC - From	20 PLF	at 0.00	to	20 PLF	at 22.00
BC - From	5 PLF	at 22.00	to	5 PLF	at 23.33

TC - 191 LB Conc. Load at 7.06, 9.06
BC - 543 LB Conc. Load at 7.00
BC - 83 LB Conc. Load at 9.06
BC - 1041 LB Conc. Load at 10.87

110 mph wind, 15.00 ft mean hgt, ASCE 7-02, CLOSED bldg, not located within 4.50 ft from roof edge, CAT II, EXP B, wind TC DL=5.0 psf, wind BC DL=5.0 psf. Iw=1.00 GCpi(+/-)=0.18

Wind reactions based on MWFRS pressures.

In lieu of structural panels use purlins to brace all flat TC @ 24" OC.

Deflection meets L/240 live and L/180 total load.

The overall height of this truss excluding overhang is 4-5-5.

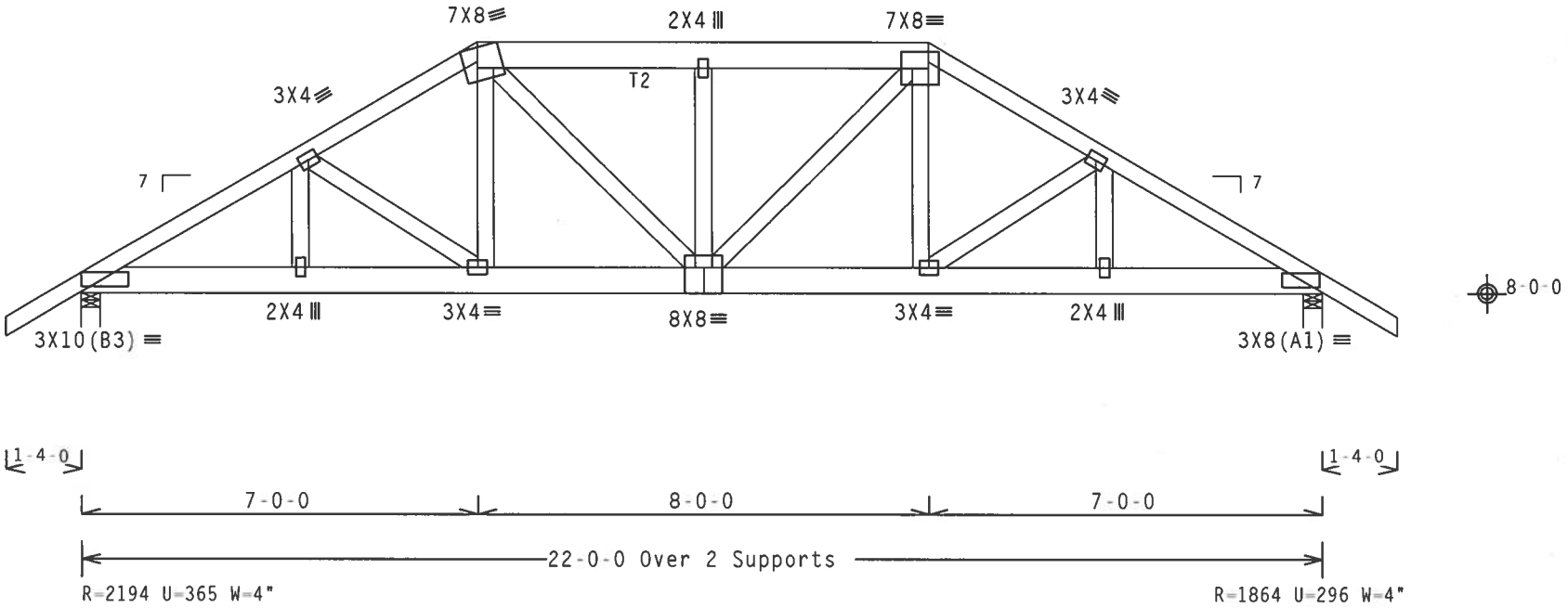

Design Crit: TPI-2002(STD)/FBC

PLT TYP. Wave | Cq/RT=1.00(1.25)/10(0) 7.36.0424.12 | QTY:1 | FL/-/5/-/-/R/- | Scale =.3125"/Ft.

ALPINE
ITW Building Components Group, Inc.

WARNING TRUSSES REQUIRE EXTREME CARE IN FABRICATION, HANDLING, SHIPPING, INSTALLING AND BRACING. REFER TO BCSI (BUILDING COMPONENT SAFETY INFORMATION), PUBLISHED BY TPI (TRUSS PLATE INSTITUTE, 218 NORTH LEE STREET, SUITE 312, ALEXANDRIA, VA, 22314) AND WTCA (WOOD TRUSS COUNCIL OF AMERICA, 6300 ENTERPRISE LANE, MADISON, WI 53719) FOR SAFETY PRACTICES PRIOR TO PERFORMING THESE FUNCTIONS. UNLESS OTHERWISE INDICATED TOP CHORD SHALL HAVE PROPERLY ATTACHED STRUCTURAL PANELS AND BOTTOM CHORD SHALL HAVE A PROPERLY ATTACHED RIGID CEILING.

IMPORTANTFURNISH A COPY OF THIS DESIGN TO THE INSTALLATION CONTRACTOR. ITW BCG, INC. SHALL NOT BE RESPONSIBLE FOR ANY DEVIATION FROM THIS DESIGN; ANY FAILURE TO BUILD THE TRUSS IN CONFORMANCE WITH TPI; OR FABRICATING, HANDLING, SHIPPING, INSTALLING & BRACING OF TRUSSES.
DESIGN CONFORMS WITH APPLICABLE PROVISIONS OF NDS (NATIONAL DESIGN SPEC. BY AF&PA) AND TPI. ITW BCG CONNECTOR PLATES ARE MADE OF 20/18/16GA (W,H/SS/K) ASTM A653 GRADE 40/60 (W, K/H,SS) GALV. STEEL. APPLY PLATES TO EACH FACE OF TRUSS AND, UNLESS OTHERWISE LOCATED ON THIS DESIGN, POSITION PER DRAWINGS 160A-Z. ANY INSPECTION OF PLATES FOLLOWED BY (1) SHALL BE PER ANNEX A3 OF TPI1-2002 SEC.3. A SEAL ON THIS DRAWING INDICATES ACCEPTANCE OF PROFESSIONAL ENGINEERING RESPONSIBILITY SOLELY FOR THE TRUSS COMPONENT DESIGN SHOWN. THE SUITABILITY AND USE OF THIS COMPONENT FOR ANY BUILDING IS THE RESPONSIBILITY OF THE

JAMES F. COLLINS, JR. LICENSE No 52212 STATE OF FLORIDA PROFESSIONAL ENGINEER

TC LL	20.0 PSF	REF R215-- 72014
TC DL	10.0 PSF	DATE 06/25/07
BC DL	10.0 PSF	DRW HCUSR215 07176011
BC LL	0.0 PSF	HC-ENG DAB/WHK
TOT.LD.	40.0 PSF	SEQN- 181535
DUR.FAC.	1.25	FROM CDM

Top chord 2x6 SP #2 N :T1 2x4 SP #2 N:
Bot chord 2x6 SP #2 N
Webs 2x4 SP #2 N

110 mph wind, 15.00 ft mean hgt, ASCE 7-02, CLOSED bldg, Located anywhere in roof, CAT II, EXP B, wind TC DL=5.0 psf, wind BC DL=5.0 psf.
Iw=1.00 GCpi(+/-)=0.18

Wind reactions based on MWFRS pressures.

#1 hip supports 7-0-0 jacks with no webs.

Deflection meets L/240 live and L/180 total load.

The overall height of this truss excluding overhang is 4-5-5.

2 COMPLETE TRUSSES REQUIRED

Nailing Schedule: (0.131"x3"_Gun_nails)
Top Chord: 1 Row @12.00" o.c.
Bot Chord: 1 Row @12.00" o.c.
Webs : 1 Row @ 4" o.c.
Use equal spacing between rows and stagger nails in each row to avoid splitting.

Right end vertical not exposed to wind pressure.

H = recommended connection based on manufacturer tested capacities and calculations. Conditions may exist that require different connections than indicated. Refer to manufacturer publication for additional information.

In lieu of structural panels use purlins to brace all flat TC @ 24" OC.

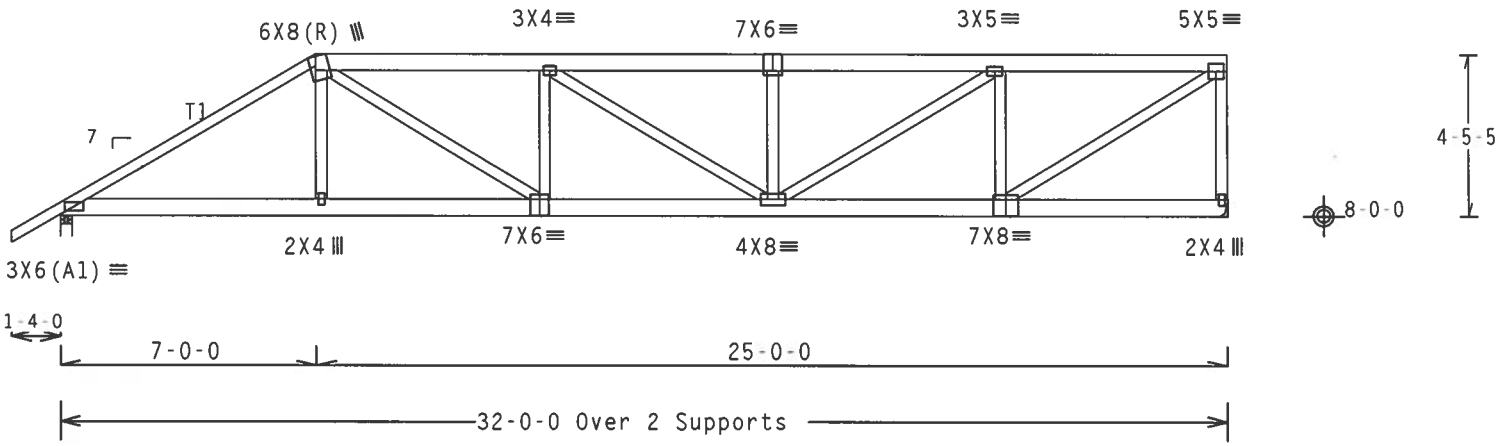

R=2743 U=239 W=4"

R=2854 U=229 H=Simpson HGUS26-2
w/ (8) 10d Common, 0.148"x3.0" nails in Truss
w/ (20) 10d Common, 0.148"x3.0" nails in Girder
Girder is (2)2X6 min. So.Pine

Design Crit: TPI-2002(STD)/FBC
PLT TYP. Wave Cq/RT=1.00(1.25)/10(0) 7.36.0424 QTY:1 FL/-/5/-/-/R/- Scale =.1875"/Ft.

ALPINE
ITW Building Components Group, Inc.

WARNING TRUSSES REQUIRE EXTREME CARE IN FABRICATION, HANDLING, SHIPPING, INSTALLING AND BRACING. REFER TO BCSI (BUILDING COMPONENT SAFETY INFORMATION), PUBLISHED BY TPI (TRUSS PLATE INSTITUTE, 218 NORTH LEE STREET, SUITE 312, ALEXANDRIA, VA. 22314) AND WTCA (WOOD TRUSS COUNCIL OF AMERICA, 6300 ENTERPRISE LANE, MADISON, WI 53719) FOR SAFETY PRACTICES PRIOR TO PERFORMING THESE FUNCTIONS. UNLESS OTHERWISE INDICATED TOP CHORD SHALL HAVE PROPERLY ATTACHED STRUCTURAL PANELS AND BOTTOM CHORD SHALL HAVE A PROPERLY ATTACHED RIGID CEILING.

IMPORTANT FURNISH A COPY OF THIS DESIGN TO THE INSTALLATION CONTRACTOR. ITW BCG, INC. SHALL NOT BE RESPONSIBLE FOR ANY DEVIATION FROM THIS DESIGN; ANY FAILURE TO BUILD THE TRUSS IN CONFORMANCE WITH TPI; OR FABRICATING, HANDLING, SHIPPING, INSTALLING & BRACING OF TRUSSES.
DESIGN CONFORMS WITH APPLICABLE PROVISIONS OF NDS (NATIONAL DESIGN SPEC, BY AF&PA) AND TPI. ITW BCG CONNECTOR PLATES ARE MADE OF 20/18/16GA (W,H/SS/K) ASTM A653 GRADE 40/60 (W, K/H,SS) GALV. STEEL. APPLY PLATES TO EACH FACE OF TRUSS AND, UNLESS OTHERWISE LOCATED ON THIS DESIGN, POSITION PER DRAWINGS 160A-Z. ANY INSPECTION OF PLATES FOLLOWED BY (1) SHALL BE PER ANNEX A3 OF TPI1 2002 SEC.3. A SEAL ON THIS DRAWING INDICATES ACCEPTANCE OF PROFESSIONAL ENGINEERING RESPONSIBILITY SOLELY FOR THE TRUSS COMPONENT DESIGN SHOWN. THE SUITABILITY AND USE OF THIS COMPONENT FOR ANY BUILDING IS THE RESPONSIBILITY OF THE

JAMES F. COLLINS, JR. LICENSE No. 52212 STATE OF FLORIDA PROFESSIONAL ENGINEER

TC LL	20.0 PSF	REF	R215-- 72015
TC DL	10.0 PSF	DATE	06/25/07
BC DL	10.0 PSF	DRW	HCUSR215 07176049
BC LL	0.0 PSF	HC-ENG	DAB/WHK
TOT.LD.	40.0 PSF	SEQN-	181652
DUR.FAC.	1.25	FROM	CDM

THIS DWG PREPARED FROM COMPUTER INPUT (LOADS & DIMENSIONS) SUBMITTED BY TRUSS MFR.

Top chord 2x4 SP #2 N
Bot chord 2x4 SP #2 N
Webs 2x4 SP #2 N

Wind reactions based on MWFRS pressures.

The overall height of this truss excluding overhang is 5-7-5.

110 mph wind, 15.00 ft mean hgt, ASCE 7-02, CLOSED bldg, not located within 4.50 ft from roof edge, CAT II, EXP B, wind TC DL=5.0 psf, wind BC DL=5.0 psf. Iw=1.00 GCpi(+/-)=0.18

Right end vertical not exposed to wind pressure.

H = recommended connection based on manufacturer tested capacities and calculations. Conditions may exist that require different connections than indicated. Refer to manufacturer publication for additional information.

In lieu of structural panels use purlins to brace all flat TC @ 24" OC.

Deflection meets L/240 live and L/180 total load.

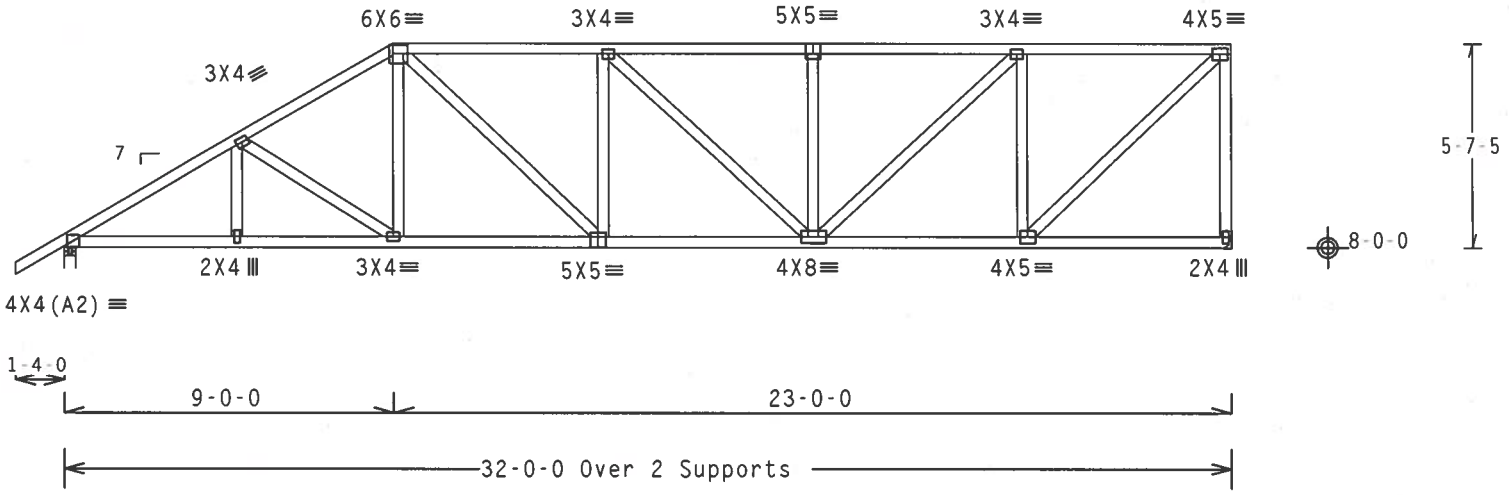

R=1429 U=130 W=4"

R=1322 U=145 H=Simpson HUS26
w/ (4) 10d Common, 0.148"x3.0" nails in Truss
w/ (14) 10d Common, 0.148"x3.0" nails in Girder
Girder is (2)2X6 min. So.Pine

Design Crit: TPI-2002(STD)/FBC

PLT TYP. Wave Cq/RT=1.00(1.25)/10(0) 7.36.0424 QTY:1 FL/-/5/-/-/R/- Scale =.1875"/Ft.

ALPINE
ITW Building Components Group, Inc.

WARNING TRUSSES REQUIRE EXTREME CARE IN FABRICATION, HANDLING, SHIPPING, INSTALLING AND BRACING. REFER TO BCSI (BUILDING COMPONENT SAFETY INFORMATION), PUBLISHED BY TPI (TRUSS PLATE INSTITUTE, 218 NORTH LEE STREET, SUITE 312, ALEXANDRIA, VA. 22314) AND WTCA (WOOD TRUSS COUNCIL OF AMERICA, 6300 ENTERPRISE LANE, MADISON, WI 53719) FOR SAFETY PRACTICES PRIOR TO PERFORMING THESE FUNCTIONS. UNLESS OTHERWISE INDICATED TOP CHORD SHALL HAVE PROPERLY ATTACHED STRUCTURAL PANELS AND BOTTOM CHORD SHALL HAVE A PROPERLY ATTACHED RIGID CEILING.

IMPORTANT FURNISH A COPY OF THIS DESIGN TO THE INSTALLATION CONTRACTOR. ITW BCG, INC. SHALL NOT BE RESPONSIBLE FOR ANY DEVIATION FROM THIS DESIGN; ANY FAILURE TO BUILD THE TRUSS IN CONFORMANCE WITH TPI; OR FABRICATING, HANDLING, SHIPPING, INSTALLING & BRACING OF TRUSSES.
DESIGN CONFORMS WITH APPLICABLE PROVISIONS OF NDS (NATIONAL DESIGN SPEC. BY AF&PA) AND TPI. ITW BCG CONNECTOR PLATES ARE MADE OF 20/18/16GA (W,H/SS/K) ASTM A653 GRADE 40/60 (W, K/H,SS) GALV. STEEL. APPLY PLATES TO EACH FACE OF TRUSS AND, UNLESS OTHERWISE LOCATED ON THIS DESIGN, POSITION PER DRAWINGS 160A-Z. ANY INSPECTION OF PLATES FOLLOWED BY (1) SHALL BE PER ANNEX A3 OF TPI1-2002 SEC.3. A SEAL ON THIS DRAWING INDICATES ACCEPTANCE OF PROFESSIONAL ENGINEERING RESPONSIBILITY SOLELY FOR THE TRUSS COMPONENT DESIGN SHOWN. THE SUITABILITY AND USE OF THIS COMPONENT FOR ANY BUILDING IS THE RESPONSIBILITY OF THE

JAMES E. COLLINS, JR. LICENSE No. E2212 STATE OF FLORIDA PROFESSIONAL ENGINEER

TC LL	20.0 PSF	REF	R215-- 72016
TC DL	10.0 PSF	DATE	06/25/07
BC DL	10.0 PSF	DRW	HCUSR215 07176050
BC LL	0.0 PSF	HC-ENG	DAB/WHK
TOT.LD.	40.0 PSF	SEQN-	181658
DUR.FAC.	1.25	FROM	CDM

THIS DWG PREPARED FROM COMPUTER INPUT (LOADS & DIMENSIONS) SUBMITTED BY TRUSS MFR.

Top chord 2x4 SP #2 N
Bot chord 2x4 SP #2 N
Webs 2x4 SP #2 N

Wind reactions based on MWFRS pressures.

Deflection meets L/240 live and L/180 total load.

The overall height of this truss excluding overhang is 4-9-5.

110 mph wind, 15.00 ft mean hgt, ASCE 7-02, CLOSED bldg, not located within 4.50 ft from roof edge, CAT II, EXP B, wind TC DL=5.0 psf, wind BC DL=5.0 psf. Iw=1.00 GCpi(+/-)=0.18

Right end vertical not exposed to wind pressure.

H = recommended connection based on manufacturer tested capacities and calculations. Conditions may exist that require different connections than indicated. Refer to manufacturer publication for additional information.

In lieu of structural panels use purlins to brace all flat TC @ 24" OC.

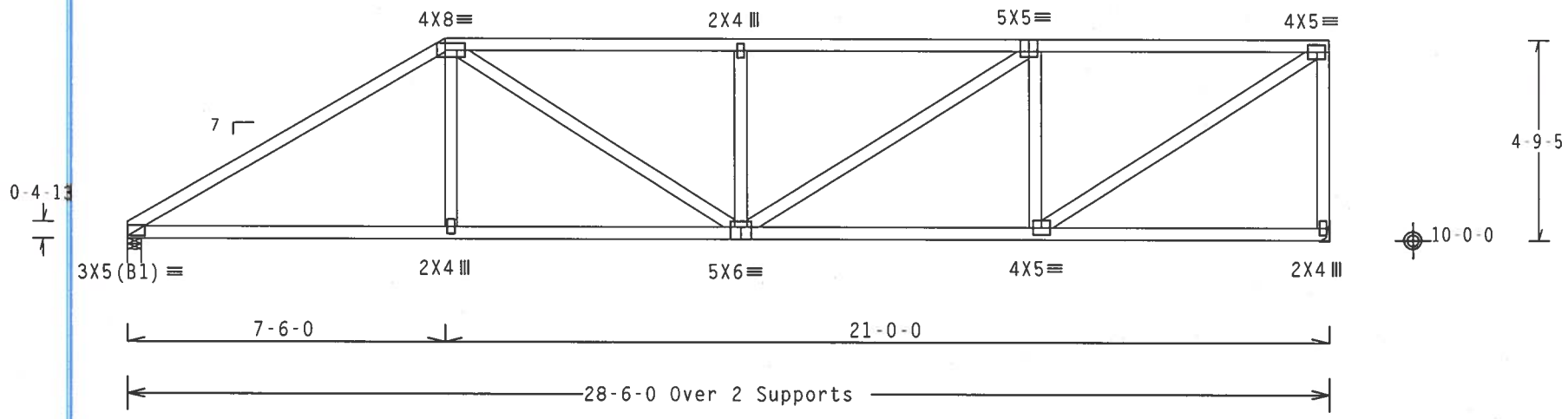

R=1191 U=103 W=4"

R=1179 U=129 H=Simpson LUS26
w/ (4) 10d Common, 0.148"x3.0" nails in Truss
w/ (4) 10d Common, 0.148"x3.0" nails in Girder
Girder is (2)2X6 min. So.Pine

Design Crit: TPI-2002(STD)/FBC
Cq/RT=1.00(1.25)/10(0) 7.36.0424

PLT TYP. Wave QTY:1 FL/-/5/-/-/R/- Scale =.25"/Ft.

ALPINE
ITW Building Components Group, Inc.

WARNING TRUSSES REQUIRE EXTREME CARE IN FABRICATION, HANDLING, SHIPPING, INSTALLING AND BRACING. REFER TO BCSI (BUILDING COMPONENT SAFETY INFORMATION), PUBLISHED BY TPI (TRUSS PLATE INSTITUTE, 218 NORTH LEE STREET, SUITE 312, ALEXANDRIA, VA, 22314) AND WTCA (WOOD TRUSS COUNCIL OF AMERICA, 6300 ENTERPRISE LANE, MADISON, WI 53719) FOR SAFETY PRACTICES PRIOR TO PERFORMING THESE FUNCTIONS. UNLESS OTHERWISE INDICATED TOP CHORD SHALL HAVE PROPERLY ATTACHED STRUCTURAL PANELS AND BOTTOM CHORD SHALL HAVE A PROPERLY ATTACHED RIGID CEILING.

IMPORTANTFURNISH A COPY OF THIS DESIGN TO THE INSTALLATION CONTRACTOR. ITW BCG, INC. SHALL NOT BE RESPONSIBLE FOR ANY DEVIATION FROM THIS DESIGN; ANY FAILURE TO BUILD THE TRUSS IN CONFORMANCE WITH TPI; OR FABRICATING, HANDLING, SHIPPING, INSTALLING & BRACING OF TRUSSES.
DESIGN CONFORMS WITH APPLICABLE PROVISIONS OF NDS (NATIONAL DESIGN SPEC. BY AF&PA) AND TPI. ITW BCG CONNECTOR PLATES ARE MADE OF 20/18/16GA (W,H/SS/K) ASTM A653 GRADE 40/60 (W, K/H,SS) GALV. STEEL. APPLY PLATES TO EACH FACE OF TRUSS AND, UNLESS OTHERWISE LOCATED ON THIS DESIGN, POSITION PER DRAWINGS 160A-Z. ANY INSPECTION OF PLATES FOLLOWED BY (1) SHALL BE PER ANNEX A3 OF TPI1-2002 SEC.3. A SEAL ON THIS DRAWING INDICATES ACCEPTANCE OF PROFESSIONAL ENGINEERING RESPONSIBILITY SOLELY FOR THE TRUSS COMPONENT DESIGN SHOWN. THE SUITABILITY AND USE OF THIS COMPONENT FOR ANY BUILDING IS THE RESPONSIBILITY OF THE

JAMES F. COLLINS, JR. LICENSE No. 52272 STATE OF FLORIDA PROFESSIONAL ENGINEER

TC LL	20.0 PSF	REF R215-- 72017
TC DL	10.0 PSF	DATE 06/25/07
BC DL	10.0 PSF	DRW HCUSR215 07176033
BC LL	0.0 PSF	HC-ENG DAB/WHK
TOT.LD.	40.0 PSF	SEQN- 181666
DUR.FAC.	1.25	FROM CDM

Top chord 2x4 SP #2 N
Bot chord 2x4 SP #2 N
Webs 2x4 SP #2 N

Wind reactions based on MWFRS pressures.

In lieu of structural panels use purlins to brace all flat TC @ 24" OC.

The overall height of this truss excluding overhang is 5-11-5.

110 mph wind, 15.00 ft mean hgt, ASCE 7-02, CLOSED bldg, not located within 4.50 ft from roof edge, CAT II, EXP B, wind TC DL=5.0 psf, wind BC DL=5.0 psf. Iw=1.00 GCpi(+/-)=0.18

Right end vertical not exposed to wind pressure.

Deflection meets L/240 live and L/180 total load.

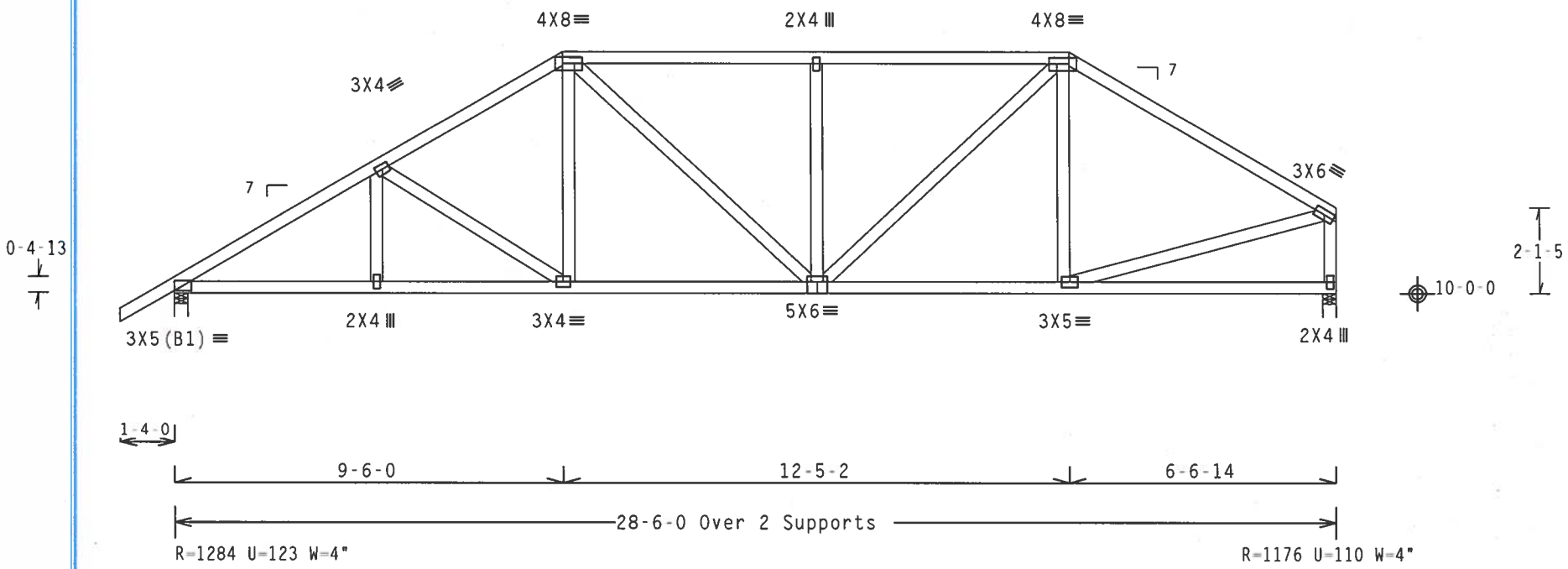

Design Crit: TPI-2002(STD)/FBC

PLT TYP. Wave Cq/RT=1.00(1.25)/10(0) 7.36.0424 12 QTY:1 FL/-/5/-/-/R/- Scale =.25"/Ft.

ALPINE
ITW Building Components Group, Inc.

WARNING TRUSSES REQUIRE EXTREME CARE IN FABRICATION, HANDLING, SHIPPING, INSTALLING AND BRACING. REFER TO BCSI (BUILDING COMPONENT SAFETY INFORMATION), PUBLISHED BY TPI (TRUSS PLATE INSTITUTE, 218 NORTH LEE STREET, SUITE 312, ALEXANDRIA, VA, 22314) AND WTCA (WOOD TRUSS COUNCIL OF AMERICA, 6300 ENTERPRISE LANE, MADISON, WI 53719) FOR SAFETY PRACTICES PRIOR TO PERFORMING THESE FUNCTIONS. UNLESS OTHERWISE INDICATED TOP CHORD SHALL HAVE PROPERLY ATTACHED STRUCTURAL PANELS AND BOTTOM CHORD SHALL HAVE A PROPERLY ATTACHED RIGID CEILING.

IMPORTANTFURNISH A COPY OF THIS DESIGN TO THE INSTALLATION CONTRACTOR. ITW BCG, INC. SHALL NOT BE RESPONSIBLE FOR ANY DEVIATION FROM THIS DESIGN; ANY FAILURE TO BUILD THE TRUSS IN COMFORMANCE WITH TPI; OR FABRICATING, HANDLING, SHIPPING, INSTALLING & BRACING OF TRUSSES.
DESIGN CONFORMS WITH APPLICABLE PROVISIONS OF NDS (NATIONAL DESIGN SPEC, BY AF&PA) AND TPI. ITW BCG CONNECTOR PLATES ARE MADE OF 20/18/16GA (W,H/SS/K) ASTM A653 GRADE 40/60 (W, K/H,SS) GALV. STEEL. APPLY PLATES TO EACH FACE OF TRUSS AND, UNLESS OTHERWISE LOCATED ON THIS DESIGN, POSITION PER DRAWINGS 160A-Z. ANY INSPECTION OF PLATES FOLLOWED BY (1) SHALL BE PER ANNEX A3 OF TPI1-2002 SEC.3. A SEAL ON THIS DRAWING INDICATES ACCEPTANCE OF PROFESSIONAL ENGINEERING RESPONSIBILITY SOLELY FOR THE TRUSS COMPONENT DESIGN SHOWN. THE SUITABILITY AND USE OF THIS COMPONENT FOR ANY BUILDING IS THE RESPONSIBILITY OF THE

JAMES F. COLLINS JR. LICENSE No. 52272 STATE OF FLORIDA PROFESSIONAL ENGINEER

TC LL	20.0 PSF	REF	R215-- 72018
TC DL	10.0 PSF	DATE	06/25/07
BC DL	10.0 PSF	DRW	HCUSR215 07176009
BC LL	0.0 PSF	HC-ENG	DAB/WHK *
TOT.LD.	40.0 PSF	SEQN-	181677
DUR.FAC.	1.25	FROM	CDM

THIS DAY PREPARED FROM COMPUTER INPUT (LOADS & DIMENSIONS) SUBMITTED BY TRUSS MFR.

Top chord 2x4 SP #2 N
Bot chord 2x4 SP #2 N
Webs 2x4 SP #2 N

Wind reactions based on MWFRS pressures.

In lieu of structural panels use purlins to brace all flat TC @ 24" OC.

The overall height of this truss excluding overhang is 7-1-5.

110 mph wind, 15.00 ft mean hgt, ASCE 7-02, CLOSED bldg, not located within 4.50 ft from roof edge, CAT II, EXP B, wind TC DL=5.0 psf, wind BC DL=5.0 psf. Iw=1.00 GCpi(+/-)=0.18

Right end vertical not exposed to wind pressure.

Deflection meets L/240 live and L/180 total load.

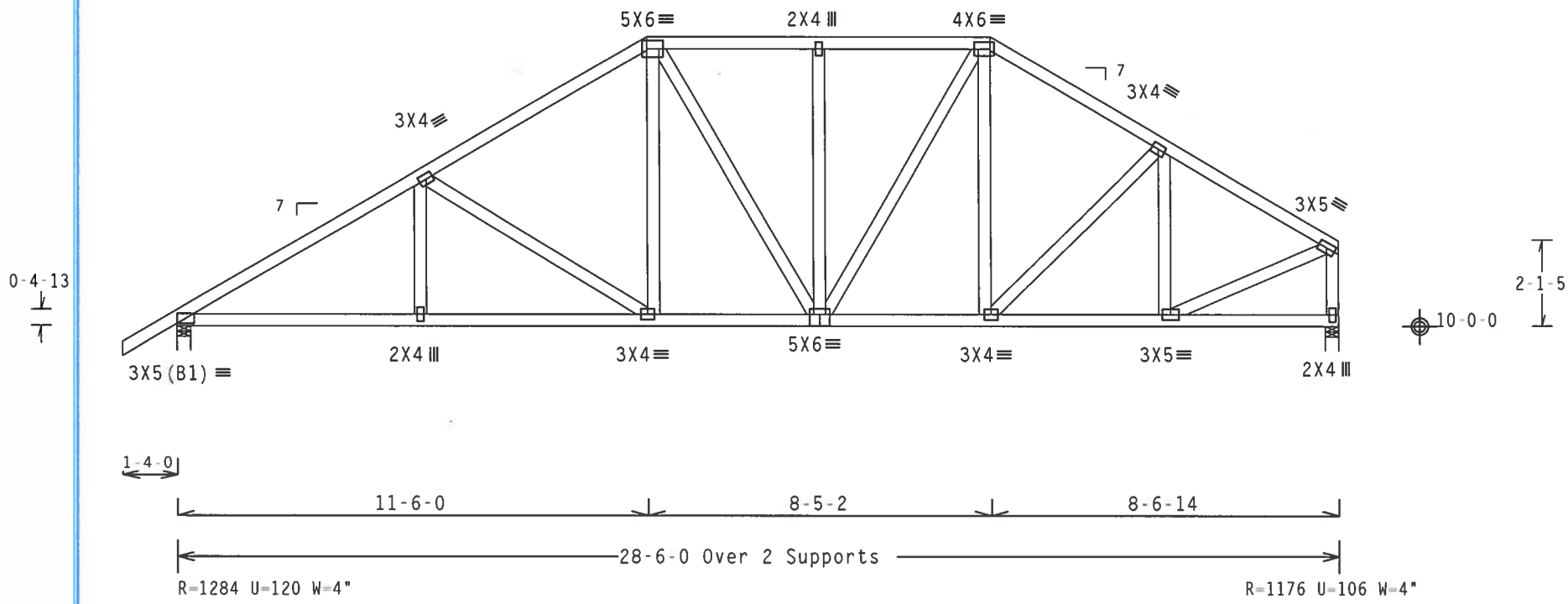

Design Crit: TPI-2002(STD)/FBC

PLT TYP. Wave Cq/RT=1.00(1.25)/10(0) 7.36.0424 QTY:1 FL/-/5/-/-/R/- Scale =.25"/Ft.

ALPINE
ITW Building Components Group, Inc.

WARNING TRUSSES REQUIRE EXTREME CARE IN FABRICATION, HANDLING, SHIPPING, INSTALLING AND BRACING. REFER TO BCSI (BUILDING COMPONENT SAFETY INFORMATION), PUBLISHED BY TPI (TRUSS PLATE INSTITUTE, 218 NORTH LEE STREET, SUITE 312, ALEXANDRIA, VA, 22314) AND WTCA (WOOD TRUSS COUNCIL OF AMERICA, 6300 ENTERPRISE LANE, MADISON, WI 53719) FOR SAFETY PRACTICES PRIOR TO PERFORMING THESE FUNCTIONS. UNLESS OTHERWISE INDICATED TOP CHORD SHALL HAVE PROPERLY ATTACHED STRUCTURAL PANELS AND BOTTOM CHORD SHALL HAVE A PROPERLY ATTACHED RIGID CEILING.

IMPORTANTFURNISH A COPY OF THIS DESIGN TO THE INSTALLATION CONTRACTOR. ITW BCG, INC. SHALL NOT BE RESPONSIBLE FOR ANY DEVIATION FROM THIS DESIGN; ANY FAILURE TO BUILD THE TRUSS IN CONFORMANCE WITH TPI; OR FABRICATING, HANDLING, SHIPPING, INSTALLING & BRACING OF TRUSSES.
DESIGN CONFORMS WITH APPLICABLE PROVISIONS OF NDS (NATIONAL DESIGN SPEC. BY AF&PA) AND TPI. ITW BCG CONNECTOR PLATES ARE MADE OF 20/18/16GA (W.H/SS/K) ASTM A653 GRADE 40/60 (W, K/H,SS) GALV. STEEL. APPLY PLATES TO EACH FACE OF TRUSS AND, UNLESS OTHERWISE LOCATED ON THIS DESIGN, POSITION PER DRAWINGS 160A-Z. ANY INSPECTION OF PLATES FOLLOWED BY (1) SHALL BE PER ANNEX A3 OF TPI1-2002 SEC.3. A SEAL ON THIS DRAWING INDICATES ACCEPTANCE OF PROFESSIONAL ENGINEERING RESPONSIBILITY SOLELY FOR THE TRUSS COMPONENT DESIGN SHOWN. THE SUITABILITY AND USE OF THIS COMPONENT FOR ANY BUILDING IS THE RESPONSIBILITY OF THE

JAMES F. COLLINS, JR. LICENSED No. 52272 STATE OF FLORIDA PROFESSIONAL ENGINEER

TC LL	20.0 PSF	REF	R215-- 72019
TC DL	10.0 PSF	DATE	06/25/07
BC DL	10.0 PSF	DRW	HCUSR215 07176052
BC LL	0.0 PSF	HC-ENG	DAB/WHK *
TOT.LD.	40.0 PSF	SEQN-	181681
DUR.FAC.	1.25	FROM	CDM

Top chord 2x4 SP #2 N
Bot chord 2x4 SP #2 N
Webs 2x4 SP #2 N

Wind reactions based on MWFRS pressures.

In lieu of structural panels use purlins to brace all flat TC @ 24" OC.

The overall height of this truss excluding overhang is 8-3-5.

110 mph wind, 15.00 ft mean hgt, ASCE 7-02, CLOSED bldg, not located within 4.50 ft from roof edge, CAT II, EXP B, wind TC DL=5.0 psf, wind BC DL=5.0 psf. Iw=1.00 GCpi(+/-)=0.18

Right end vertical not exposed to wind pressure.

Deflection meets L/240 live and L/180 total load.

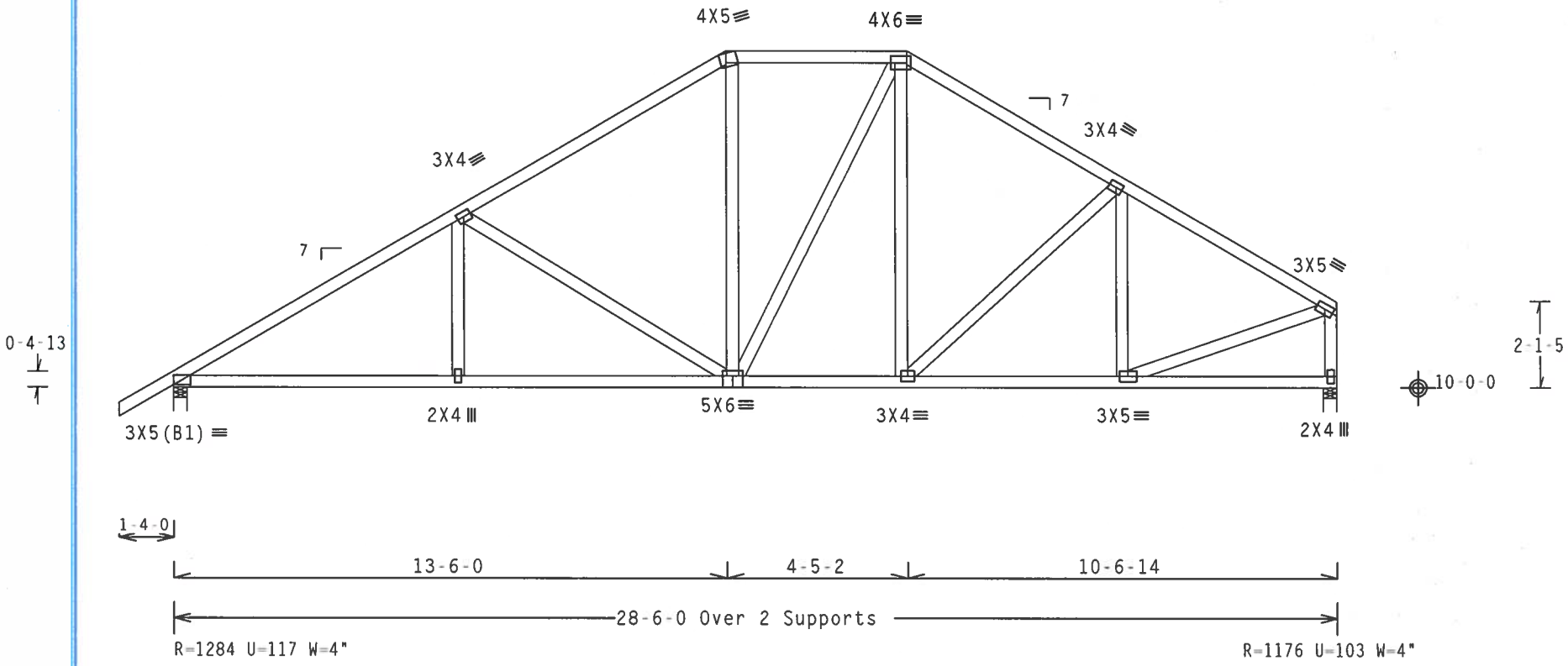

Design Crit: TPI-2002(STD)/FBC

PLT TYP. Wave Cq/RT=1.00(1.25)/10(0) 7.36.0424.10 QTY:1 FL/-/5/-/-/R/- Scale =.25"/Ft.

ALPINE
ITW Building Components Group, Inc.

WARNING TRUSSES REQUIRE EXTREME CARE IN FABRICATION, HANDLING, SHIPPING, INSTALLING AND BRACING. REFER TO BCSI (BUILDING COMPONENT SAFETY INFORMATION), PUBLISHED BY TPI (TRUSS PLATE INSTITUTE, 218 NORTH LEE STREET, SUITE 312, ALEXANDRIA, VA. 22314) AND WTCA (WOOD TRUSS COUNCIL OF AMERICA, 6300 ENTERPRISE LANE, MADISON, WI 53719) FOR SAFETY PRACTICES PRIOR TO PERFORMING THESE FUNCTIONS. UNLESS OTHERWISE INDICATED TOP CHORD SHALL HAVE PROPERLY ATTACHED STRUCTURAL PANELS AND BOTTOM CHORD SHALL HAVE A PROPERLY ATTACHED RIGID CEILING.

IMPORTANTFURNISH A COPY OF THIS DESIGN TO THE INSTALLATION CONTRACTOR. ITW BCG, INC. SHALL NOT BE RESPONSIBLE FOR ANY DEVIATION FROM THIS DESIGN; ANY FAILURE TO BUILD THE TRUSS IN CONFORMANCE WITH TPI; OR FABRICATING, HANDLING, SHIPPING, INSTALLING & BRACING OF TRUSSES.
DESIGN CONFORMS WITH APPLICABLE PROVISIONS OF NDS (NATIONAL DESIGN SPEC. BY AF&PA) AND TPI. ITW BCG CONNECTOR PLATES ARE MADE OF 20/18/16GA (W,H/SS/K) ASTM A653 GRADE 40/60 (W, K/H,SS) GALV. STEEL. APPLY PLATES TO EACH FACE OF TRUSS AND, UNLESS OTHERWISE LOCATED ON THIS DESIGN, POSITION PER DRAWINGS 160A-Z. ANY INSPECTION OF PLATES FOLLOWED BY (1) SHALL BE PER ANNEX A3 OF TPI1-2002 SEC.3. A SEAL ON THIS DRAWING INDICATES ACCEPTANCE OF PROFESSIONAL ENGINEERING RESPONSIBILITY SOLELY FOR THE TRUSS COMPONENT DESIGN SHOWN. THE SUITABILITY AND USE OF THIS COMPONENT FOR ANY BUILDING IS THE RESPONSIBILITY OF THE

JAMES F. COLLINS, JR. LICENSE No. 52272 STATE OF FLORIDA PROFESSIONAL ENGINEER

TC LL	20.0 PSF	REF	R215-- 72020
TC DL	10.0 PSF	DATE	06/25/07
BC DL	10.0 PSF	DRW	HCUSR215 07176005
BC LL	0.0 PSF	HC-ENG	DAB/WHK *
TOT.LD.	40.0 PSF	SEQN-	181685
DUR.FAC.	1.25	FROM	CDM

THIS DWG PREPARED FROM COMPUTER INPUT (LOADS & DIMENSIONS) SUBMITTED BY TRUSS MFR.

Top chord 2x4 SP #2 N
Bot chord 2x4 SP #2 N
Webs 2x4 SP #2 N

Wind reactions based on MWFRS pressures.

(A) Continuous lateral bracing equally spaced on member.

The overall height of this truss excluding overhang is 9-5-5.

110 mph wind, 15.00 ft mean hgt, ASCE 7-02, CLOSED bldg, not located within 4.50 ft from roof edge, CAT II, EXP B, wind TC DL=5.0 psf, wind BC DL=5.0 psf. Iw=1.00 GCpi(+/-)=0.18

Right end vertical not exposed to wind pressure.

Deflection meets L/240 live and L/180 total load.

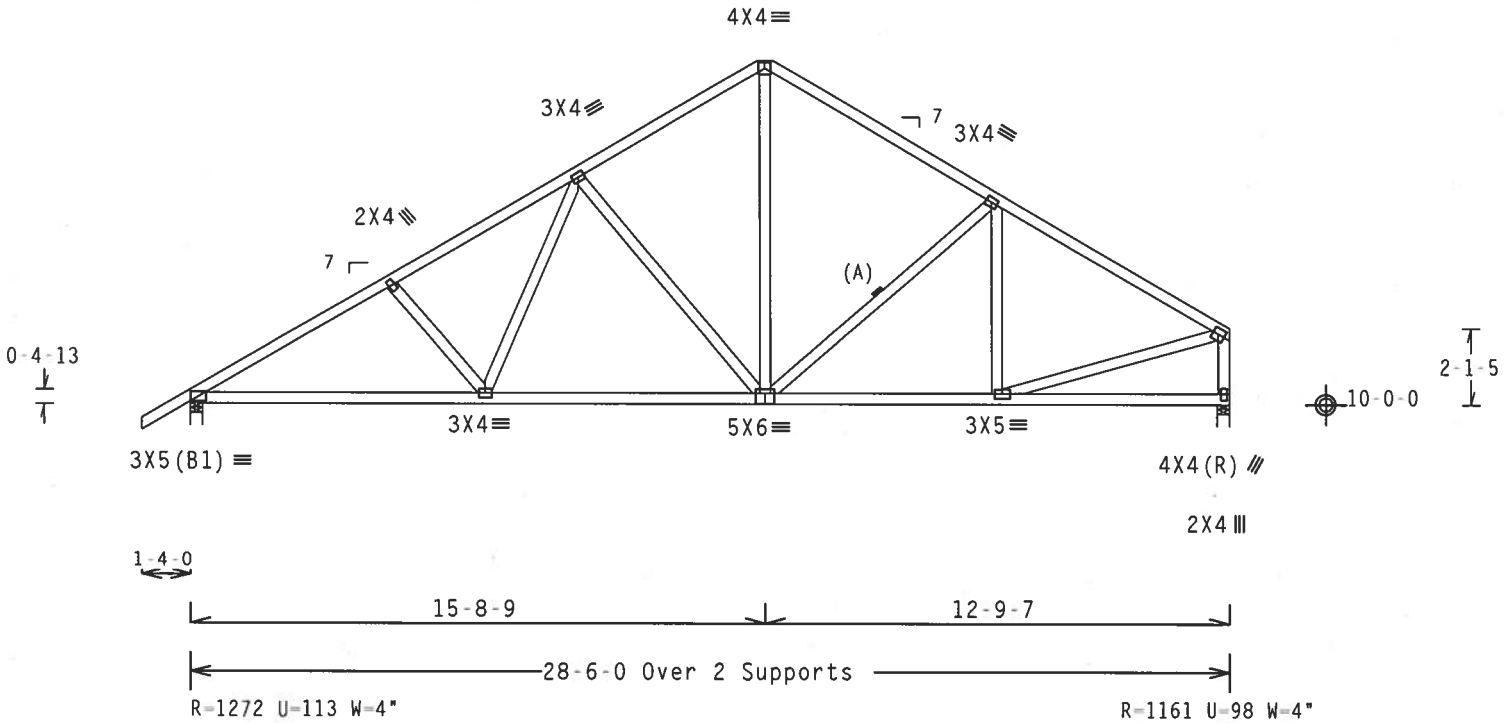

Design Crit: TPI-2002(STD)/FBC

PLT TYP. Wave Cq/RT=1.00(1.25)/10(0) 7.36.0424 QTY:1 FL/-/5/-/-/R/- Scale =.1875"/Ft.

ALPINE
ITW Building Components Group, Inc.

WARNING TRUSSES REQUIRE EXTREME CARE IN FABRICATION, HANDLING, SHIPPING, INSTALLING AND BRACING. REFER TO BCSI (BUILDING COMPONENT SAFETY INFORMATION), PUBLISHED BY TPI (TRUSS PLATE INSTITUTE, 218 NORTH LEE STREET, SUITE 312, ALEXANDRIA, VA. 22314) AND WTCA (WOOD TRUSS COUNCIL OF AMERICA, 6300 ENTERPRISE LANE, MADISON, WI 53719) FOR SAFETY PRACTICES PRIOR TO PERFORMING THESE FUNCTIONS. UNLESS OTHERWISE INDICATED TOP CHORD SHALL HAVE PROPERLY ATTACHED STRUCTURAL PANELS AND BOTTOM CHORD SHALL HAVE A PROPERLY ATTACHED RIGID CEILING.

IMPORTANTFURNISH A COPY OF THIS DESIGN TO THE INSTALLATION CONTRACTOR. ITW BCG, INC. SHALL NOT BE RESPONSIBLE FOR ANY DEVIATION FROM THIS DESIGN; ANY FAILURE TO BUILD THE TRUSS IN COMFORMANCE WITH TPI; OR FABRICATING, HANDLING, SHIPPING, INSTALLING & BRACING OF TRUSSES.
DESIGN CONFORMS WITH APPLICABLE PROVISIONS OF NDS (NATIONAL DESIGN SPEC, BY AF&PA) AND TPI. ITW BCG CONNECTOR PLATES ARE MADE OF 20/18/16GA (W,H/SS/K) ASTM A653 GRADE 40/60 (W, K/H,SS) GALV. STEEL. APPLY PLATES TO EACH FACE OF TRUSS AND, UNLESS OTHERWISE LOCATED ON THIS DESIGN, POSITION PER DRAWINGS 160A-Z. ANY INSPECTION OF PLATES FOLLOWED BY (1) SHALL BE PER ANNEX A3 OF TPI1-2002 SEC.3. A SEAL ON THIS DRAWING INDICATES ACCEPTANCE OF PROFESSIONAL ENGINEERING RESPONSIBILITY SOLELY FOR THE TRUSS COMPONENT DESIGN SHOWN. THE SUITABILITY AND USE OF THIS COMPONENT FOR ANY BUILDING IS THE RESPONSIBILITY OF THE

JAMES F. COLLINS, JR. LICENSE No 52272 STATE OF FLORIDA PROFESSIONAL ENGINEER

TC LL	20.0 PSF	REF	R215-- 72021
TC DL	10.0 PSF	DATE	06/25/07
BC DL	10.0 PSF	DRW	HCUSR215 07176006
BC LL	0.0 PSF	HC-ENG	DAB/WHK *
TOT.LD.	40.0 PSF	SEQN-	181689
DUR.FAC.	1.25	FROM	CDM

THIS DWG PREPARED FROM COMPUTER INPUT (LOADS & DIMENSIONS) SUBMITTED BY TRUSS MFR.

Top chord 2x4 SP #2 N
Bot chord 2x4 SP #2 N
Webs 2x4 SP #2 N

Wind reactions based on MWFRS pressures.

The overall height of this truss excluding overhang is 9-6-13.

110 mph wind, 15.00 ft mean hgt, ASCE 7-02, CLOSED bldg, not located within 4.50 ft from roof edge, CAT II, EXP B, wind TC DL=5.0 psf, wind BC DL=5.0 psf. Iw=1.00 GCpi(+/-)=0.18

Deflection meets L/240 live and L/180 total load.

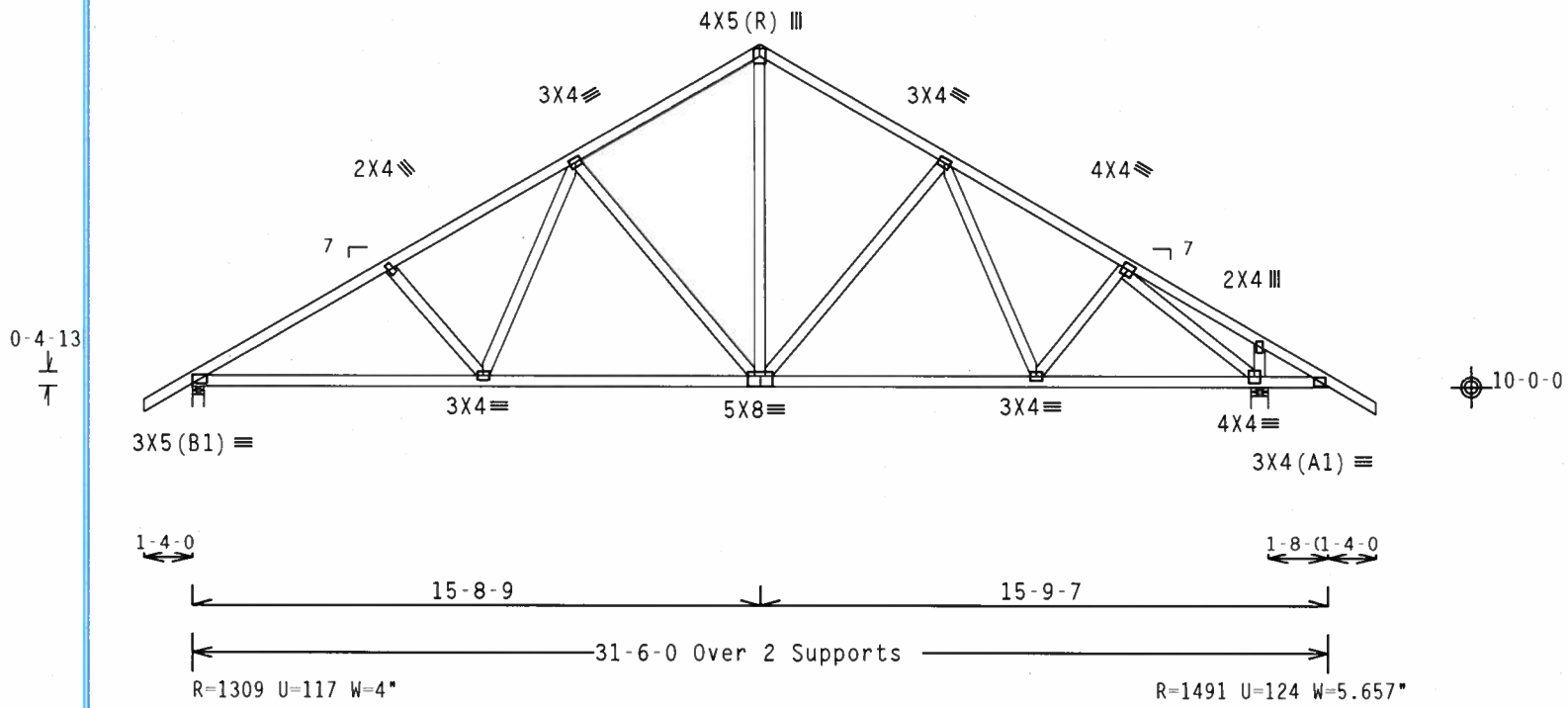

Design Crit: TPI-2002(STD)/FBC

PLT TYP. Wave | Cq/RT=1.00(1.25)/10(0) 7.36.0424 1 | QTY:1 | FL/-/5/-/-/R/- | Scale =.1875"/Ft.

ALPINE
ITW Building Components Group, Inc.

WARNING TRUSSES REQUIRE EXTREME CARE IN FABRICATION, HANDLING, SHIPPING, INSTALLING AND BRACING. REFER TO BCSI (BUILDING COMPONENT SAFETY INFORMATION), PUBLISHED BY TPI (TRUSS PLATE INSTITUTE, 218 NORTH LEE STREET, SUITE 312, ALEXANDRIA, VA, 22314) AND WTCA (WOOD TRUSS COUNCIL OF AMERICA, 6300 ENTERPRISE LANE, MADISON, WI 53719) FOR SAFETY PRACTICES PRIOR TO PERFORMING THESE FUNCTIONS. UNLESS OTHERWISE INDICATED TOP CHORD SHALL HAVE PROPERLY ATTACHED STRUCTURAL PANELS AND BOTTOM CHORD SHALL HAVE A PROPERLY ATTACHED RIGID CEILING.

IMPORTANTFURNISH A COPY OF THIS DESIGN TO THE INSTALLATION CONTRACTOR. ITW BCG, INC. SHALL NOT BE RESPONSIBLE FOR ANY DEVIATION FROM THIS DESIGN; ANY FAILURE TO BUILD THE TRUSS IN CONFORMANCE WITH TPI; OR FABRICATING, HANDLING, SHIPPING, INSTALLING & BRACING OF TRUSSES. DESIGN CONFORMS WITH APPLICABLE PROVISIONS OF NDS (NATIONAL DESIGN SPEC. BY AF&PA) AND TPI. ITW BCG CONNECTOR PLATES ARE MADE OF 20/18/16GA (W,H/SS/K) ASTM A653 GRADE 40/60 (W, K/H,SS) GALV. STEEL. APPLY PLATES TO EACH FACE OF TRUSS AND, UNLESS OTHERWISE LOCATED ON THIS DESIGN, POSITION PER DRAWINGS 160A Z. ANY INSPECTION OF PLATES FOLLOWED BY (1) SHALL BE PER ANNEX A3 OF TPI1 2002 SEC.3. A SEAL ON THIS DRAWING INDICATES ACCEPTANCE OF PROFESSIONAL ENGINEERING RESPONSIBILITY SOLELY FOR THE TRUSS COMPONENT DESIGN SHOWN. THE SUITABILITY AND USE OF THIS COMPONENT FOR ANY BUILDING IS THE RESPONSIBILITY OF THE

JAMES F. COLLINS, JR. LICENSED No. 52212 STATE OF FLORIDA PROFESSIONAL ENGINEER

TC LL	20.0 PSF	REF	R215-- 72022
TC DL	10.0 PSF	DATE	06/25/07
BC DL	10.0 PSF	DRW	HCUSR215 07176007
BC LL	0.0 PSF	HC-ENG	DAB/WHK *
TOT.LD.	40.0 PSF	SEQN-	181693
DUR.FAC.	1.25	FROM	CDM

THIS DWG PREPARED FROM COMPUTER INPUT (LOADS & DIMENSIONS) SUBMITTED BY TRUSS MFR.

Top chord 2x4 SP #2 N
Bot chord 2x4 SP #2 N
Webs 2x4 SP #2 N

Wind reactions based on MWFRS pressures.

The overall height of this truss excluding overhang is 9-6-13.

110 mph wind, 15.00 ft mean hgt, ASCE 7-02, CLOSED bldg, not located within 4.50 ft from roof edge, CAT II, EXP B, wind TC DL=5.0 psf, wind BC DL=5.0 psf. Iw=1.00 GCpi(+/-)=0.18

Deflection meets L/240 live and L/180 total load.

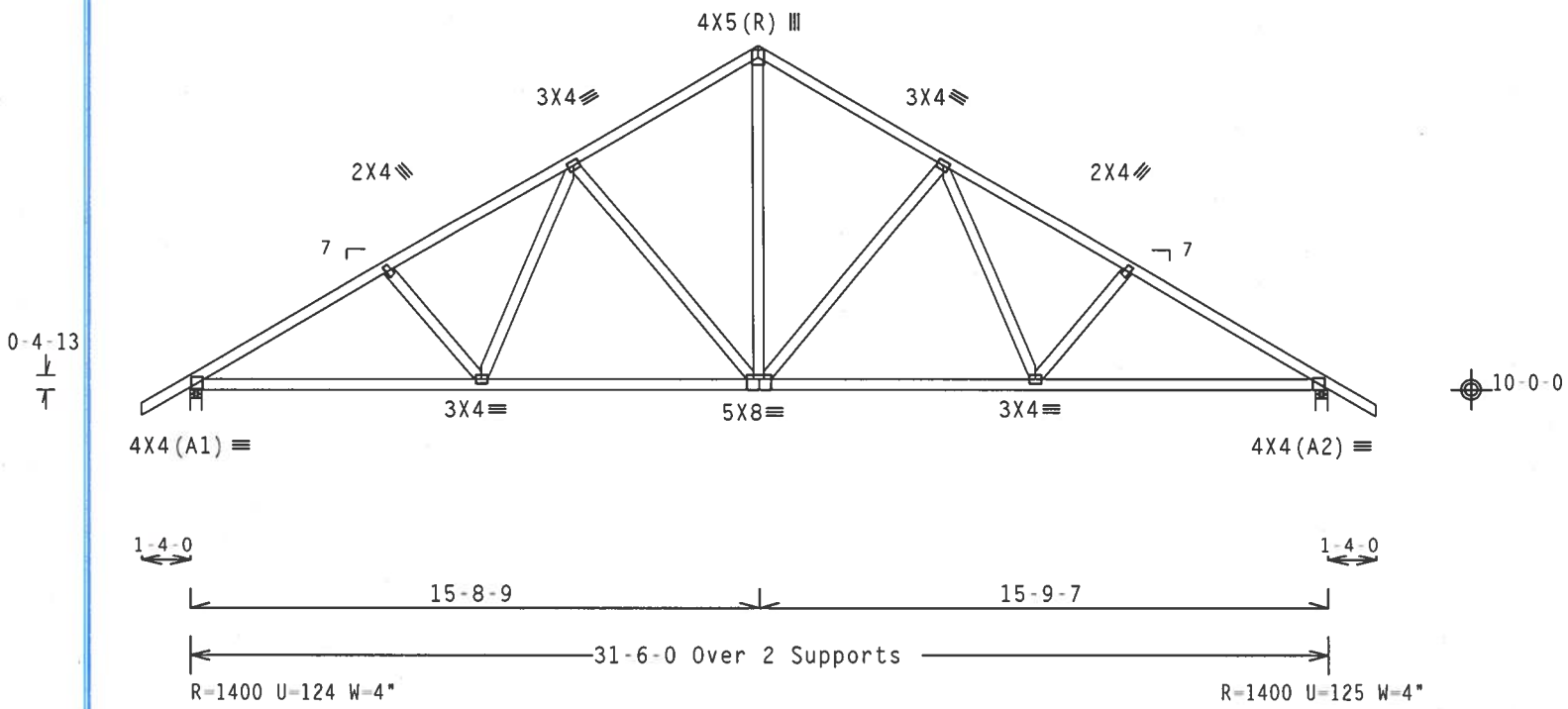

Design Crit: TPI-2002(STD)/FBC

PLT TYP. Wave | Cq/RT=1.00(1.25)/10(0) 7.36.0424 | QTY:1 | FL/-/5/-/-/R/- | Scale =.1875"/Ft.

ALPINE
ITW Building Components Group, Inc.

WARNING TRUSSES REQUIRE EXTREME CARE IN FABRICATION, HANDLING, SHIPPING, INSTALLING AND BRACING. REFER TO BCSI (BUILDING COMPONENT SAFETY INFORMATION), PUBLISHED BY TPI (TRUSS PLATE INSTITUTE, 218 NORTH LEE STREET, SUITE 312, ALEXANDRIA, VA, 22314) AND WTCA (WOOD TRUSS COUNCIL OF AMERICA, 6300 ENTERPRISE LANE, MADISON, WI 53719) FOR SAFETY PRACTICES PRIOR TO PERFORMING THESE FUNCTIONS. UNLESS OTHERWISE INDICATED TOP CHORD SHALL HAVE PROPERLY ATTACHED STRUCTURAL PANELS AND BOTTOM CHORD SHALL HAVE A PROPERLY ATTACHED RIGID CEILING.

IMPORTANT FURNISH A COPY OF THIS DESIGN TO THE INSTALLATION CONTRACTOR. ITW BCG, INC. SHALL NOT BE RESPONSIBLE FOR ANY DEVIATION FROM THIS DESIGN; ANY FAILURE TO BUILD THE TRUSS IN CONFORMANCE WITH TPI; OR FABRICATING, HANDLING, SHIPPING, INSTALLING & BRACING OF TRUSSES. DESIGN CONFORMS WITH APPLICABLE PROVISIONS OF NDS (NATIONAL DESIGN SPEC. BY AF&PA) AND TPI. ITW BCG CONNECTOR PLATES ARE MADE OF 20/18/16GA (W,H/SS/K) ASTM A653 GRADE 40/60 (W, K/H,SS) GALV. STEEL. APPLY PLATES TO EACH FACE OF TRUSS AND, UNLESS OTHERWISE LOCATED ON THIS DESIGN, POSITION PER DRAWINGS 160A-Z. ANY INSPECTION OF PLATES FOLLOWED BY (I) SHALL BE PER ANNEX A3 OF TPI1-2002 SEC.3. A SEAL ON THIS DRAWING INDICATES ACCEPTANCE OF PROFESSIONAL ENGINEERING RESPONSIBILITY SOLELY FOR THE TRUSS COMPONENT

JAMES F. COLLINS JR. LICENSE No. 52212 STATE OF FLORIDA PROFESSIONAL ENGINEER

TC LL	20.0 PSF	REF	R215-- 72023
TC DL	10.0 PSF	DATE	06/25/07
BC DL	10.0 PSF	DRW	HCUSR215 07176008
BC LL	0.0 PSF	HC-ENG	DAB/WHK *
TOT.LD.	40.0 PSF	SEQN-	181697
DUR.FAC.	1.25	FROM	CDM

THIS DWG PREPARED FROM COMPUTER INPUT (LOADS & DIMENSIONS) SUBMITTED BY TRUSS MFR.

Top chord 2x4 SP #2 N
Bot chord 2x4 SP #2 N :B3, B4 2x6 SP SS:
:B5, B6 2x6 SP #2 N:
Webs 2x4 SP #2 N

SPECIAL LOADS
------(LUMBER DUR.FAC.=1.25 / PLATE DUR.FAC.=1.25)

TC - From	63 PLF	at -1.33 to	63 PLF	at 16.94
TC - From	63 PLF	at 16.94 to	63 PLF	at 21.48
TC - From	63 PLF	at 21.48 to	63 PLF	at 36.33
BC - From	5 PLF	at -1.33 to	5 PLF	at 0.00
BC - From	20 PLF	at 0.00 to	20 PLF	at 2.30
BC - From	22 PLF	at 2.30 to	22 PLF	at 5.13
BC - From	20 PLF	at 5.13 to	20 PLF	at 20.00
BC - From	20 PLF	at 20.00 to	20 PLF	at 22.83
BC - From	20 PLF	at 22.83 to	20 PLF	at 35.00
BC - From	5 PLF	at 35.00 to	5 PLF	at 36.33

BC - 905 LB Conc. Load at 33.94
PLB- 1986 LB Conc. Load at (7.06,10.04)
PLB- 909 LB Conc. Load at (9.06,10.04), (11.06,10.04), (13.06,10.04) (19.06,10.04), (21.06,8.04), (23.06,10.04), (25.06,10.04), (27.06,10.04) (27.94,10.04), (29.94,10.04), (31.94,10.04)
PLB- 905 LB Conc. Load at (15.06,10.04)
PLB- 907 LB Conc. Load at (17.06,10.04)

In lieu of structural panels use purlins to brace all flat TC @ 24" OC.

Deflection meets L/240 live and L/180 total load.

The overall height of this truss excluding overhang is 10-2-15.

SEE DWGS TCFILLER0207 AND BCFILLER0207 FOR FILLER DETAILS. LATERALLY BRACE BOTTOM CHORD ABOVE/BELOW FILLER AT 24" O.C. (OR AS DESIGNED) INCLUDING A LATERAL BRACE ON CHORD DIRECTLY ABOVE/BELOW BOTH ENDS OF FILLER (IF NO RIGID DIAPHRAGM EXISTS AT THAT POINT)

2 COMPLETE TRUSSES REQUIRED

Nailing Schedule: (0.131"x3"_Gun_nails)
Top Chord: 1 Row @12.00" o.c.
Bot Chord: 1 Row @ 3.75" o.c.
Webs : 1 Row @ 4" o.c.
Use equal spacing between rows and stagger nails in each row to avoid splitting.

Bearing blocks: Nail type: 0.131"x3"_Gun_nails

BRG	X-LOC	#BLOCKS	LENGTH/BLK	#NAILS/BLK	WALL PLATE
2	19.500'	2	17"	22	Rigid Surface

Bearing block to be same size and species as bottom chord.
Refer to drawing CNBRGBLK0207 for additional information.

110 mph wind, 15.00 ft mean hgt, ASCE 7-02, CLOSED bldg, not located within 4.50 ft from roof edge, CAT II, EXP B, wind TC DL=5.0 psf, wind BC DL=5.0 psf. Iw=1.00 GCpi(+/-)=0.18

Wind reactions based on MWFRS pressures.

(A) Continuous lateral bracing equally spaced on member.

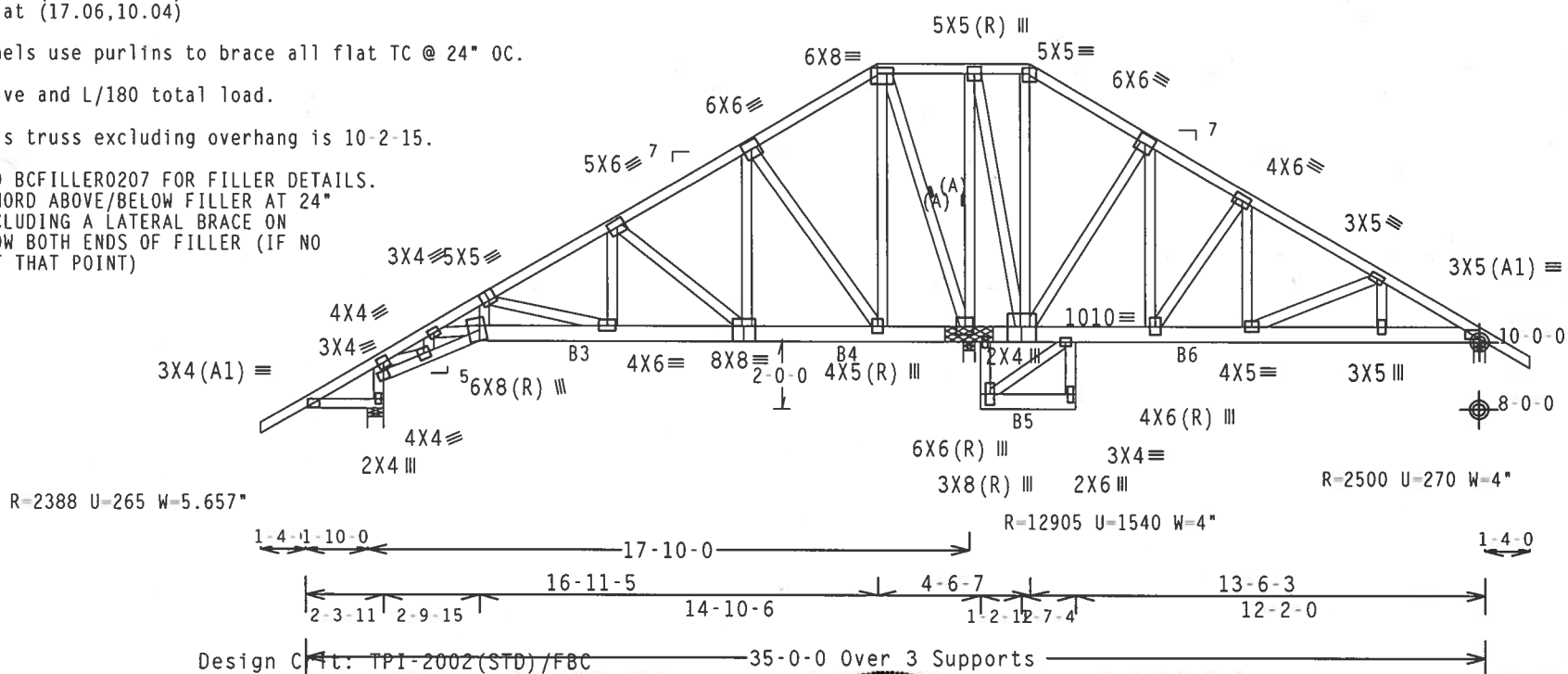

Design Crit: TPI-2002(STD)/FBC
Cg/RT=1.00(1.25)/10(0) 7.36.0424

PLT TYP. Wave QTY:1 FL/-/5/-/-/R/- Scale =.1875"/Ft.

ALPINE
ITW Building Components Group, Inc.

WARNING TRUSSES REQUIRE EXTREME CARE IN FABRICATION, HANDLING, SHIPPING, INSTALLING AND BRACING. REFER TO BCSI (BUILDING COMPONENT SAFETY INFORMATION), PUBLISHED BY TPI (TRUSS PLATE INSTITUTE, 218 NORTH LEE STREET, SUITE 312, ALEXANDRIA, VA, 22314) AND WTCA (WOOD TRUSS COUNCIL OF AMERICA, 6300 ENTERPRISE LANE, MADISON, WI 53719) FOR SAFETY PRACTICES PRIOR TO PERFORMING THESE FUNCTIONS. UNLESS OTHERWISE INDICATED TOP CHORD SHALL HAVE PROPERLY ATTACHED STRUCTURAL PANELS AND BOTTOM CHORD SHALL HAVE A PROPERLY ATTACHED RIGID CEILING.

IMPORTANT FURNISH A COPY OF THIS DESIGN TO THE INSTALLATION CONTRACTOR. ITW BCG, INC. SHALL NOT BE RESPONSIBLE FOR ANY DEVIATION FROM THIS DESIGN; ANY FAILURE TO BUILD THE TRUSS IN CONFORMANCE WITH TPI; OR FABRICATING, HANDLING, SHIPPING, INSTALLING & BRACING OF TRUSSES. DESIGN CONFORMS WITH APPLICABLE PROVISIONS OF NDS (NATIONAL DESIGN SPEC. BY AF&PA) AND TPI. ITW BCG CONNECTOR PLATES ARE MADE OF 20/18/16GA (W,H/SS/K) ASTM A653 GRADE 40/60 (W, K/H,SS) GALV. STEEL. APPLY PLATES TO EACH FACE OF TRUSS AND, UNLESS OTHERWISE LOCATED ON THIS DESIGN, POSITION PER DRAWINGS 160A-Z. ANY INSPECTION OF PLATES FOLLOWED BY (1) SHALL BE PER ANNEX A3 OF TPI1-2002 SEC.3. A SEAL ON THIS DRAWING INDICATES ACCEPTANCE OF PROFESSIONAL ENGINEERING RESPONSIBILITY SOLELY FOR THE TRUSS COMPONENT DESIGN SHOWN. THE SUITABILITY AND USE OF THIS COMPONENT FOR ANY BUILDING IS THE RESPONSIBILITY OF THE

JAMES F. COLLINS JR. LICENSE No. 52212 STATE OF FLORIDA PROFESSIONAL ENGINEER

TC LL	20.0 PSF	REF	R215-- 72024
TC DL	10.0 PSF	DATE	06/25/07
BC DL	10.0 PSF	DRW	HCUSR215 07176047
BC LL	0.0 PSF	HC-ENG	WHK/WHK
TOT.LD.	40.0 PSF	SEQN-	184527
DUR.FAC.	1.25	FROM	CDM

THIS DWG PREPARED FROM COMPUTER INPUT (LOADS & DIMENSIONS) SUBMITTED BY TRUSS MFR.

Top chord 2x4 SP #2 N
Bot chord 2x4 SP #2 N :B2 2x6 SP #2 N:
Webs 2x4 SP #2 N

SPECIAL LOADS
------(LUMBER DUR.FAC.=1.25 / PLATE DUR.FAC.=1.25)

TC - From	63 PLF at	0.00 to	63 PLF at	8.12
TC - From	63 PLF at	8.12 to	63 PLF at	21.00
BC - From	20 PLF at	0.00 to	20 PLF at	8.33
BC - From	20 PLF at	8.33 to	20 PLF at	19.67
BC - From	5 PLF at	19.67 to	5 PLF at	21.00

BC - 1178 LB Conc. Load at 8.60
BC - 1322 LB Conc. Load at 10.60
BC - 2854 LB Conc. Load at 12.54

2 COMPLETE TRUSSES REQUIRED

Nailing Schedule: (0.131"x3"_Gun_nails)
Top Chord: 1 Row @12.00" o.c.
Bot Chord: 1 Row @ 5.75" o.c.
Webs : 1 Row @ 4" o.c.
Use equal spacing between rows and stagger nails in each row to avoid splitting.

110 mph wind, 15.00 ft mean hgt, ASCE 7-02, CLOSED bldg, Located anywhere in roof, CAT II, EXP B, wind TC DL=5.0 psf, wind BC DL=5.0 psf. Iw=1.00 GCpi(+/-)=0.18

Wind reactions based on MWFRS pressures.

Deflection meets L/240 live and L/180 total load.

The overall height of this truss excluding overhang is 5-1-2.

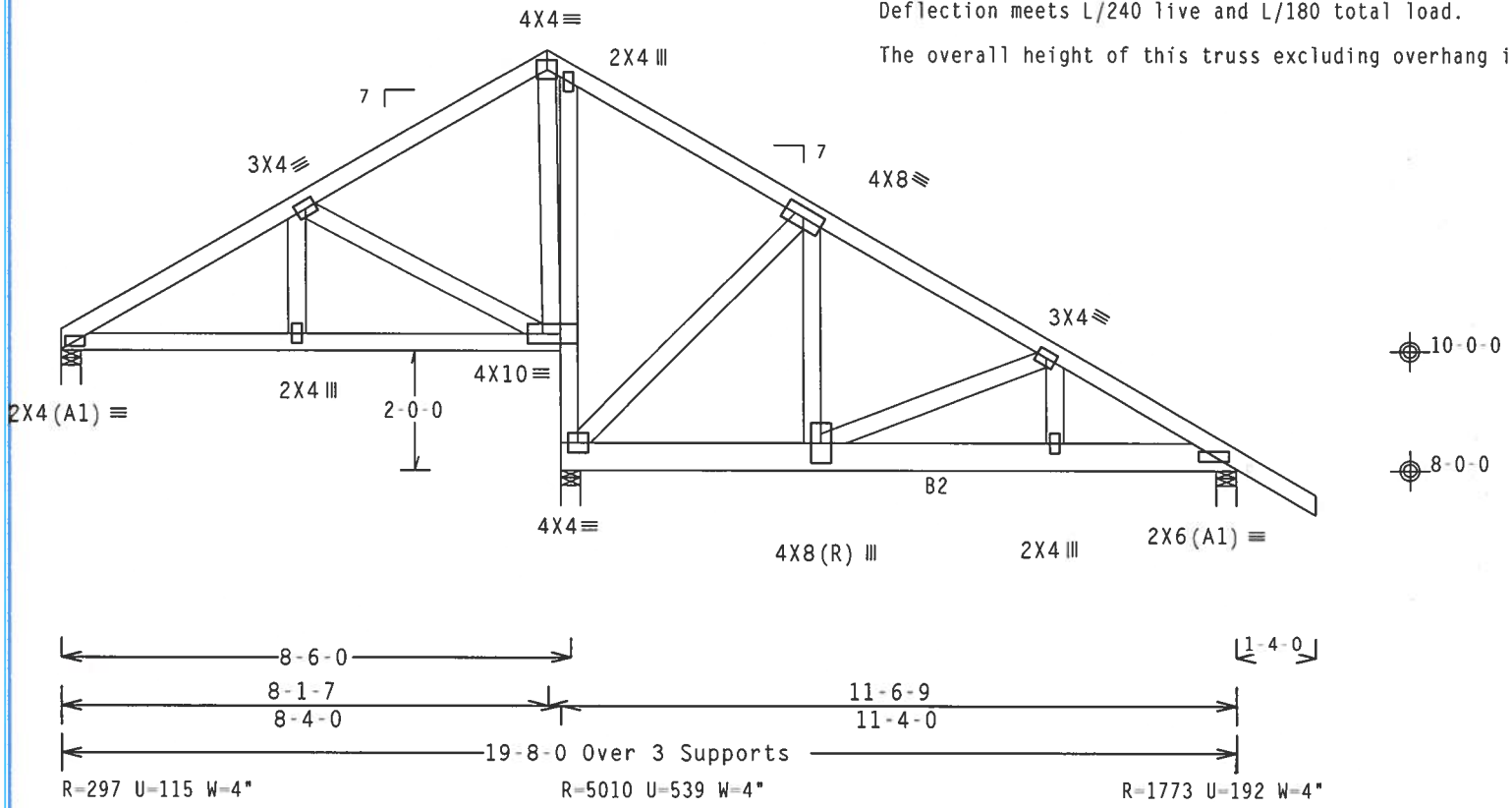

Design Crit: TPI-2002(STD)/FBC

PLT TYP. Wave Cq/RT=1.00(1.25)/10(0) 7.36.0424 QTY:1 FL/-/5/-/-/R/- Scale =.3125"/Ft.

ALPINE
ITW Building Components Group, Inc.

WARNING TRUSSES REQUIRE EXTREME CARE IN FABRICATION, HANDLING, SHIPPING, INSTALLING AND BRACING. REFER TO BCSI (BUILDING COMPONENT SAFETY INFORMATION), PUBLISHED BY TPI (TRUSS PLATE INSTITUTE, 218 NORTH LEE STREET, SUITE 312, ALEXANDRIA, VA, 22314) AND WTCA (WOOD TRUSS COUNCIL OF AMERICA, 6300 ENTERPRISE LANE, MADISON, WI 53719) FOR SAFETY PRACTICES PRIOR TO PERFORMING THESE FUNCTIONS. UNLESS OTHERWISE INDICATED TOP CHORD SHALL HAVE PROPERLY ATTACHED STRUCTURAL PANELS AND BOTTOM CHORD SHALL HAVE A PROPERLY ATTACHED RIGID CEILING.

IMPORTANTFURNISH A COPY OF THIS DESIGN TO THE INSTALLATION CONTRACTOR. ITW BCG, INC. SHALL NOT BE RESPONSIBLE FOR ANY DEVIATION FROM THIS DESIGN; ANY FAILURE TO BUILD THE TRUSS IN COMFORMANCE WITH TPI; OR FABRICATING, HANDLING, SHIPPING, INSTALLING & BRACING OF TRUSSES.
DESIGN CONFORMS WITH APPLICABLE PROVISIONS OF NDS (NATIONAL DESIGN SPEC. BY AF&PA) AND TPI. ITW BCG CONNECTOR PLATES ARE MADE OF 20/18/16GA (W,H/SS/K) ASTM A653 GRADE 40/60 (W, K/H,SS) GALV. STEEL. APPLY PLATES TO EACH FACE OF TRUSS AND. UNLESS OTHERWISE LOCATED ON THIS DESIGN, POSITION PER DRAWINGS 160A-Z. ANY INSPECTION OF PLATES FOLLOWED BY (1) SHALL BE PER ANNEX A3 OF TPI1-2002 SEC.3. A SEAL ON THIS DRAWING INDICATES ACCEPTANCE OF PROFESSIONAL ENGINEERING RESPONSIBILITY SOLELY FOR THE TRUSS COMPONENT DESIGN SHOWN. THE SUITABILITY AND USE OF THIS COMPONENT FOR ANY BUILDING IS THE RESPONSIBILITY OF THE

JAMES F. COLLINS, JR. LICENSE No. 52212 STATE OF FLORIDA PROFESSIONAL ENGINEER

TC LL	20.0 PSF	REF R215-- 72025
TC DL	10.0 PSF	DATE 06/25/07
BC DL	10.0 PSF	DRW HCUSR215 07176044
BC LL	0.0 PSF	HC-ENG DAB/WHK
TOT.LD.	40.0 PSF	SEQN- 181673 REV
DUR.FAC.	1.25	FROM CDM

THIS DWG PREPARED FROM COMPUTER INPUT (LOADS & DIMENSIONS) SUBMITTED BY TRUSS MFR.

Top chord 2x4 SP #2 N
Bot chord 2x4 SP #2 N
Webs 2x4 SP #2 N

Wind reactions based on MWFRS pressures.

The overall height of this truss excluding overhang is 5-1-2.

110 mph wind, 15.00 ft mean hgt, ASCE 7-02, CLOSED bldg, Located anywhere in roof, CAT II, EXP B, wind TC DL=5.0 psf, wind BC DL=5.0 psf. Iw=1.00 GCpi(+/-)=0.18

Deflection meets L/240 live and L/180 total load.

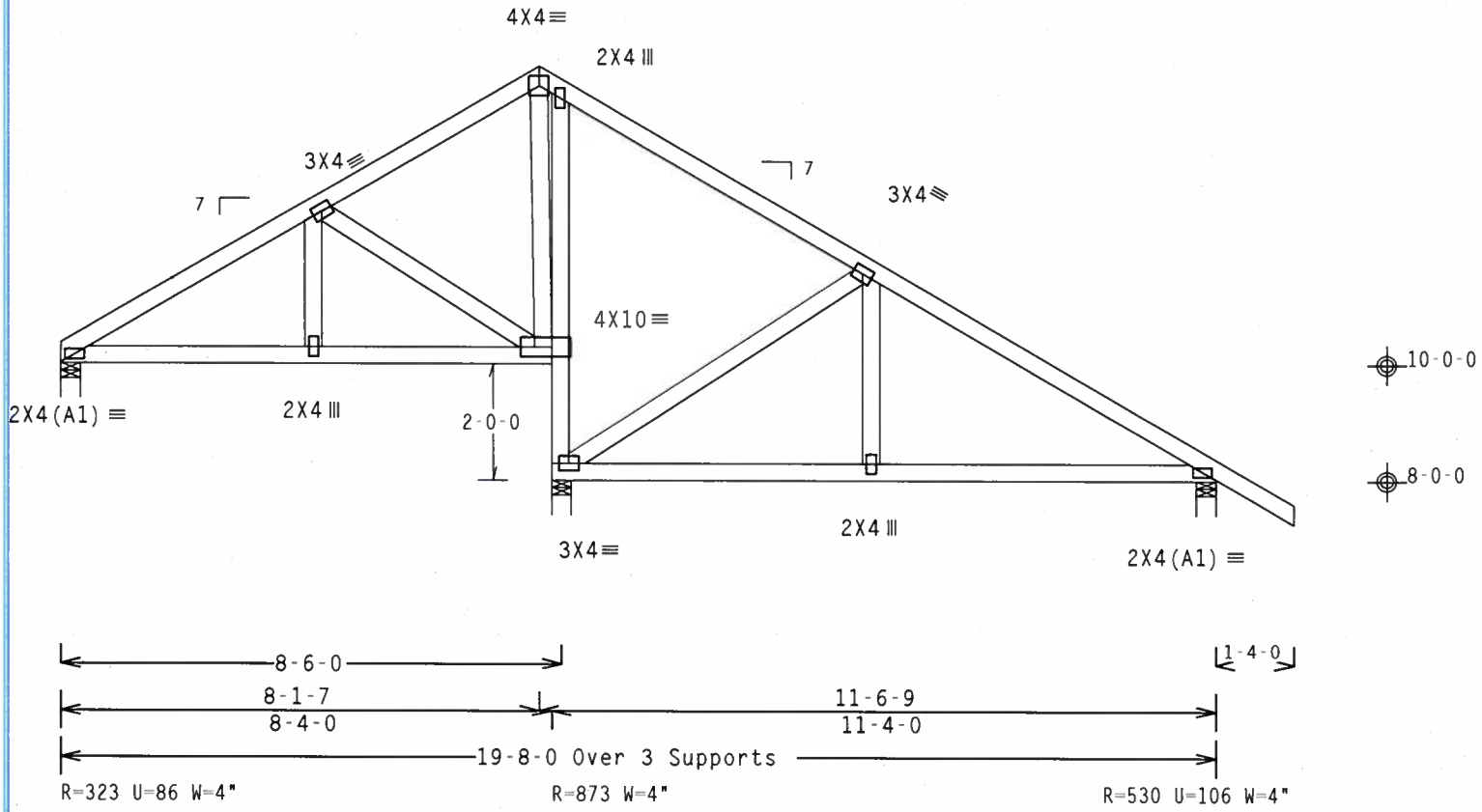

Design Crit: TPI-2002(STD)/FBC

PLT TYP. Wave Cq/RT=1.00(1.25)/10(0) 7.36.0424.1 QTY:1 FL/-/5/-/-/R/- Scale =.3125"/Ft.

ALPINE
ITW Building Components Group, Inc.

WARNING TRUSSES REQUIRE EXTREME CARE IN FABRICATION, HANDLING, SHIPPING, INSTALLING AND BRACING. REFER TO BCSI (BUILDING COMPONENT SAFETY INFORMATION), PUBLISHED BY TPI (TRUSS PLATE INSTITUTE, 218 NORTH LEE STREET, SUITE 312, ALEXANDRIA, VA, 22314) AND WTCA (WOOD TRUSS COUNCIL OF AMERICA, 6300 ENTERPRISE LANE, MADISON, WI 53719) FOR SAFETY PRACTICES PRIOR TO PERFORMING THESE FUNCTIONS. UNLESS OTHERWISE INDICATED TOP CHORD SHALL HAVE PROPERLY ATTACHED STRUCTURAL PANELS AND BOTTOM CHORD SHALL HAVE A PROPERLY ATTACHED RIGID CEILING.

IMPORTANTFURNISH A COPY OF THIS DESIGN TO THE INSTALLATION CONTRACTOR. ITW BCG, INC. SHALL NOT BE RESPONSIBLE FOR ANY DEVIATION FROM THIS DESIGN; ANY FAILURE TO BUILD THE TRUSS IN CONFORMANCE WITH TPI; OR FABRICATING, HANDLING, SHIPPING, INSTALLING & BRACING OF TRUSSES.
DESIGN CONFORMS WITH APPLICABLE PROVISIONS OF NDS (NATIONAL DESIGN SPEC, BY AF&PA) AND TPI. ITW BCG CONNECTOR PLATES ARE MADE OF 20/18/16GA (W,H/SS/K) ASTM A653 GRADE 40/60 (W, K/H,SS) GALV. STEEL. APPLY PLATES TO EACH FACE OF TRUSS AND, UNLESS OTHERWISE LOCATED ON THIS DESIGN, POSITION PER DRAWINGS 160A-Z. ANY INSPECTION OF PLATES FOLLOWED BY (1) SHALL BE PER ANNEX A3 OF TPI1-2002 SEC.3. A SEAL ON THIS DRAWING INDICATES ACCEPTANCE OF PROFESSIONAL ENGINEERING RESPONSIBILITY SOLELY FOR THE TRUSS COMPONENT DESIGN SHOWN. THE SUITABILITY AND USE OF THIS COMPONENT FOR ANY BUILDING IS THE RESPONSIBILITY OF THE

JAMES F. COLLINS JR. LICENSED No. 52212 STATE OF FLORIDA PROFESSIONAL ENGINEER

TC LL	20.0 PSF	REF	R215-- 72026
TC DL	10.0 PSF	DATE	06/25/07
BC DL	10.0 PSF	DRW	HCUSR215 07176034
BC LL	0.0 PSF	HC-ENG	DAB/WHK
TOT.LD.	40.0 PSF	SEQN-	181546 REV
DUR.FAC.	1.25	FROM	CDM

Top chord 2x4 SP #2 N
Bot chord 2x4 SP #2 N
Webs 2x4 SP #2 N

Wind reactions based on MWFRS pressures.

See DWGS A11015EE0207 & GBLLETIN0207 for more requirements.

The overall height of this truss excluding overhang is 4-9-1.

110 mph wind, 15.00 ft mean hgt, ASCE 7-02, CLOSED bldg, Located anywhere in roof, CAT II, EXP B, wind TC DL=5.0 psf, wind BC DL=5.0 psf. Iw=1.00 GCpi(+/-)=0.18

Gable end supports 8" max rake overhang.

Deflection meets L/240 live and L/180 total load.

+ Member to be laterally braced for horizontal wind loads. Bracing system to be designed and furnished by others.

The building designer is responsible for the design of the roof and ceiling diaphragms, gable end shear walls, and supporting shear walls. Shear walls must provide continuous lateral restraint to the gable end. All connections to be designed by the building designer.

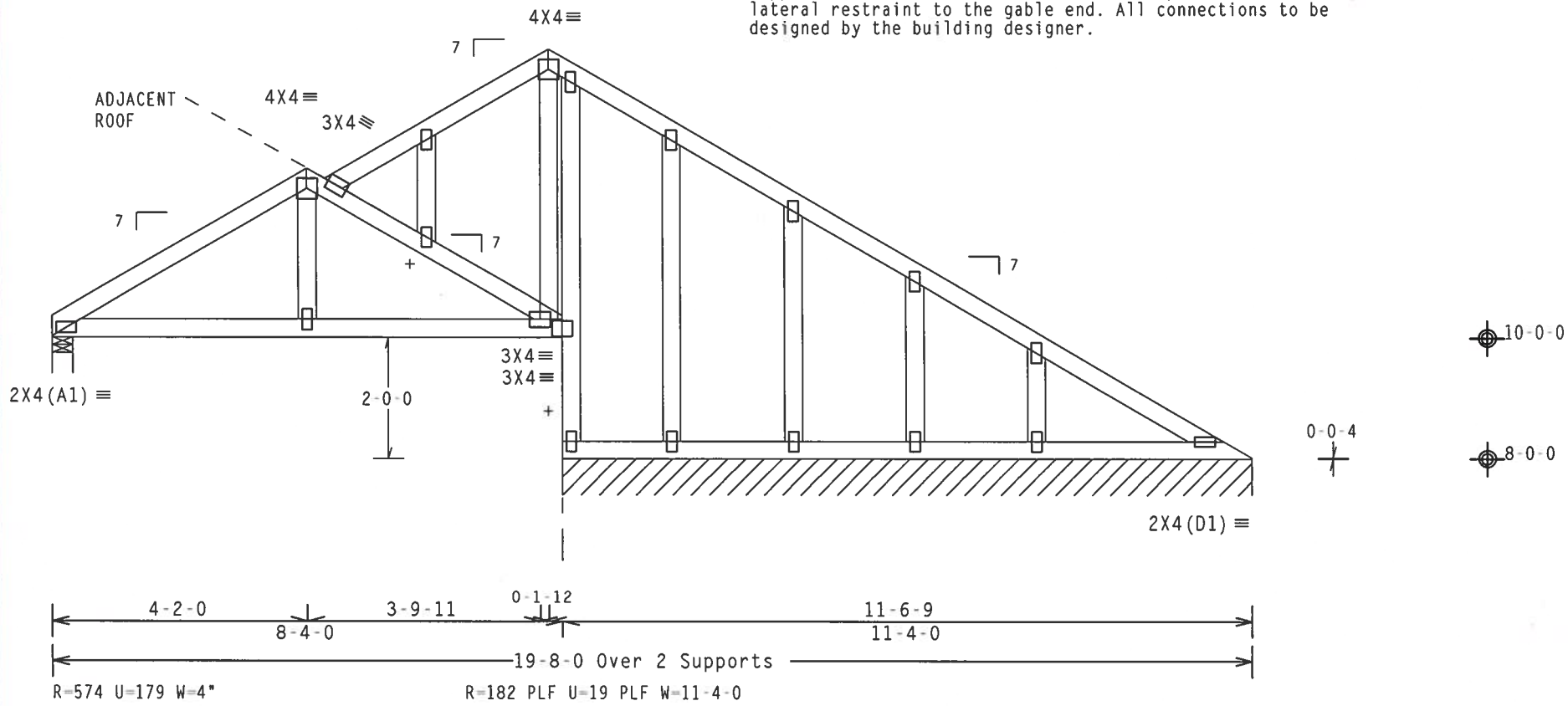

Note: All Plates Are 2X4 Except As Shown.

Design Crit: TPI-2002(STD)/FBC

PLT TYP. Wave Cq/RT=1.00(1.25)/10(0) 7.36.0424.12 QTY:1 FL/-/5/-/-/R/- Scale =.375"/Ft.

ALPINE
ITW Building Components Group, Inc.

WARNING TRUSSES REQUIRE EXTREME CARE IN FABRICATION, HANDLING, SHIPPING, INSTALLING AND BRACING. REFER TO BCSI (BUILDING COMPONENT SAFETY INFORMATION), PUBLISHED BY TPI (TRUSS PLATE INSTITUTE, 218 NORTH LEE STREET, SUITE 312, ALEXANDRIA, VA, 22314) AND WTCA (WOOD TRUSS COUNCIL OF AMERICA, 6300 ENTERPRISE LANE, MADISON, WI 53719) FOR SAFETY PRACTICES PRIOR TO PERFORMING THESE FUNCTIONS. UNLESS OTHERWISE INDICATED TOP CHORD SHALL HAVE PROPERLY ATTACHED STRUCTURAL PANELS AND BOTTOM CHORD SHALL HAVE A PROPERLY ATTACHED RIGID CEILING.

IMPORTANTFURNISH A COPY OF THIS DESIGN TO THE INSTALLATION CONTRACTOR. ITW BCG, INC. SHALL NOT BE RESPONSIBLE FOR ANY DEVIATION FROM THIS DESIGN; ANY FAILURE TO BUILD THE TRUSS IN CONFORMANCE WITH TPI; OR FABRICATING, HANDLING, SHIPPING, INSTALLING & BRACING OF TRUSSES.
DESIGN CONFORMS WITH APPLICABLE PROVISIONS OF NDS (NATIONAL DESIGN SPEC. BY AF&PA) AND TPI. ITW BCG CONNECTOR PLATES ARE MADE OF 20/18/16GA (W,H/SS/K) ASTM A653 GRADE 40/60 (W, K/H,SS) GALV. STEEL. APPLY PLATES TO EACH FACE OF TRUSS AND, UNLESS OTHERWISE LOCATED ON THIS DESIGN, POSITION PER DRAWINGS 160A-Z. ANY INSPECTION OF PLATES FOLLOWED BY (1) SHALL BE PER ANNEX A3 OF TPI1 2002 SEC.3. A SEAL ON THIS DRAWING INDICATES ACCEPTANCE OF PROFESSIONAL ENGINEERING RESPONSIBILITY SOLELY FOR THE TRUSS COMPONENT

JAMES F. COLLINS JR. LICENSE No. 52212 STATE OF FLORIDA PROFESSIONAL ENGINEER

TC LL	20.0 PSF	REF R215-- 72027
TC DL	10.0 PSF	DATE 06/25/07
BC DL	10.0 PSF	DRW HCUSR215 07176004
BC LL	0.0 PSF	HC-ENG DAB/WHK
TOT.LD.	40.0 PSF	SEQN- 181722
DUR.FAC.	1.25	FROM CDM

THIS DWG PREPARED FROM COMPUTER INPUT (LOADS & DIMENSIONS) SUBMITTED BY TRUSS MFR.

Top chord 2x4 SP #2 N
Bot chord 2x4 SP #2 N
Webs 2x4 SP #2 N

Wind reactions based on MWFRS pressures.

The overall height of this truss excluding overhang is 2-0-12.

110 mph wind, 15.00 ft mean hgt, ASCE 7-02, CLOSED bldg, Located anywhere in roof, CAT II, EXP B, wind TC DL=5.0 psf, wind BC DL=5.0 psf. Iw=1.00 GCpi(+/-)=0.18

Right end vertical not exposed to wind pressure.

See DWGS A11015EE0207 & GBLLETIN0207 for more requirements.

Deflection meets L/240 live and L/180 total load.

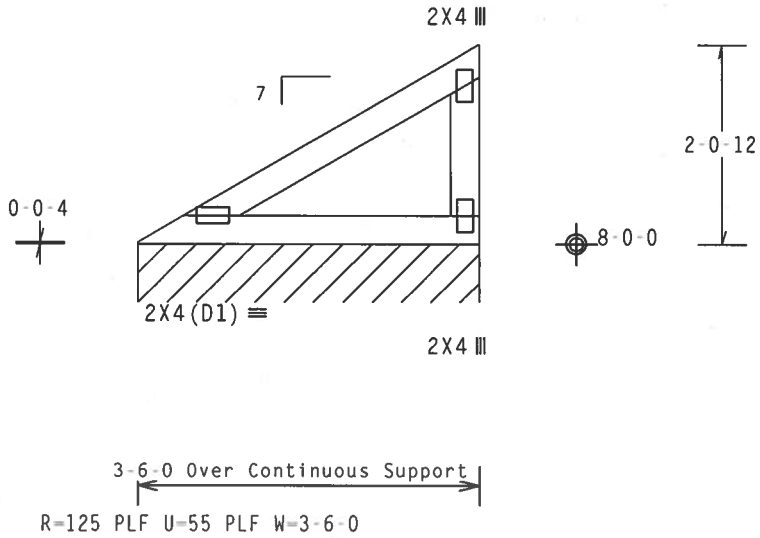

Design Crit: TPI-2002(STD)/FBC
Cq/RT=1.00(1.25)/10(0) 7.36.0424.12 QTY:1 FL/-/5/-/-/R/- Scale =.5"/Ft.

PLT TYP. Wave

ALPINE
ITW Building Components Group, Inc.

WARNING TRUSSES REQUIRE EXTREME CARE IN FABRICATION, HANDLING, SHIPPING, INSTALLING AND BRACING. REFER TO BCSI (BUILDING COMPONENT SAFETY INFORMATION), PUBLISHED BY TPI (TRUSS PLATE INSTITUTE, 218 NORTH LEE STREET, SUITE 312, ALEXANDRIA, VA, 22314) AND WTCA (WOOD TRUSS COUNCIL OF AMERICA, 6300 ENTERPRISE LANE, MADISON, WI 53719) FOR SAFETY PRACTICES PRIOR TO PERFORMING THESE FUNCTIONS. UNLESS OTHERWISE INDICATED TOP CHORD SHALL HAVE PROPERLY ATTACHED STRUCTURAL PANELS AND BOTTOM CHORD SHALL HAVE A PROPERLY ATTACHED RIGID CEILING.

IMPORTANTFURNISH A COPY OF THIS DESIGN TO THE INSTALLATION CONTRACTOR. ITW BCG, INC. SHALL NOT BE RESPONSIBLE FOR ANY DEVIATION FROM THIS DESIGN; ANY FAILURE TO BUILD THE TRUSS IN COMFORMANCE WITH TPI; OR FABRICATING, HANDLING, SHIPPING, INSTALLING & BRACING OF TRUSSES.
DESIGN CONFORMS WITH APPLICABLE PROVISIONS OF NDS (NATIONAL DESIGN SPEC, BY AF&PA) AND TPI. ITW BCG CONNECTOR PLATES ARE MADE OF 20/18/16GA (W,H/SS/K) ASTM A653 GRADE 40/60 (W, K/H,SS) GALV. STEEL. APPLY PLATES TO EACH FACE OF TRUSS AND, UNLESS OTHERWISE LOCATED ON THIS DESIGN, POSITION PER DRAWINGS 160A-Z. ANY INSPECTION OF PLATES FOLLOWED BY (1) SHALL BE PER ANNEX A3 OF TPI1-2002 SEC.3. A SEAL ON THIS DRAWING INDICATES ACCEPTANCE OF PROFESSIONAL ENGINEERING RESPONSIBILITY SOLELY FOR THE TRUSS COMPONENT DESIGN SHOWN. THE SUITABILITY AND USE OF THIS COMPONENT FOR ANY BUILDING IS THE RESPONSIBILITY OF THE

JAMES E. COLLINS LICENSED No. 52212 STATE OF FLORIDA PROFESSIONAL ENGINEER

TC LL	20.0 PSF	REF	R215-- 72028
TC DL	10.0 PSF	DATE	06/25/07
BC DL	10.0 PSF	DRW	HCUSR215 07176039
BC LL	0.0 PSF	HC-ENG	DAB/WHK *
TOT.LD.	40.0 PSF	SEQN-	181661
DUR.FAC.	1.25	FROM	CDM

THIS DWG PREPARED FROM COMPUTER INPUT (LOADS & DIMENSIONS) SUBMITTED BY TRUSS MFR.

Top chord 2x4 SP #2 N
Bot chord 2x4 SP #2 N
Webs 2x4 SP #2 N

Wind reactions based on MWFRS pressures.

Left end vertical not exposed to wind pressure.

In lieu of structural panels use purlins to brace all flat TC @ 24" OC.

The overall height of this truss excluding overhang is 3-10-5.

110 mph wind, 15.00 ft mean hgt, ASCE 7-02, CLOSED bldg, not located within 4.50 ft from roof edge, CAT II, EXP B, wind TC DL=5.0 psf, wind BC DL=5.0 psf. Iw=1.00 GCpi(+/-)=0.18

H = recommended connection based on manufacturer tested capacities and calculations. Conditions may exist that require different connections than indicated. Refer to manufacturer publication for additional information.

Deflection meets L/240 live and L/180 total load.

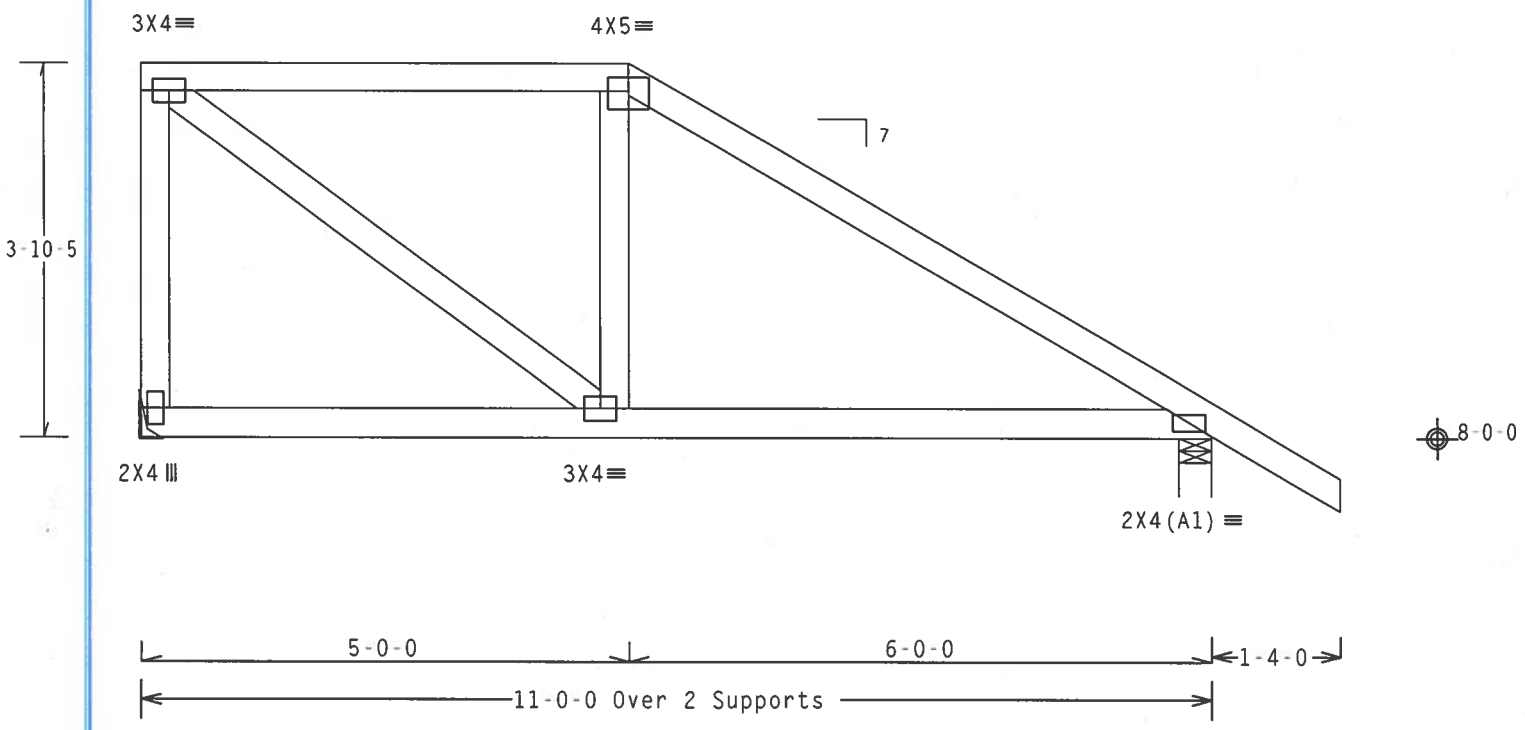

R=432 U=57 H=Simpson LUS24
w/ (2) 10d Common, 0.148"x3.0" nails in Truss
w/ (4) 10d Common, 0.148"x3.0" nails in Girder
Girder is (2)2X6 min. So.Pine

R=557 U=43 W=4"

Design Crit: TPI-2002(STD)/FBC

PLT TYP. Wave | Cq/RT=1.00(1.25)/10(0) 7.36.0424 | QTY:1 | FL/-/5/-/-/R/- | Scale =.5"/Ft.

ALPINE
ITW Building Components Group, Inc.

WARNING TRUSSES REQUIRE EXTREME CARE IN FABRICATION, HANDLING, SHIPPING, INSTALLING AND BRACING. REFER TO BCSI (BUILDING COMPONENT SAFETY INFORMATION), PUBLISHED BY TPI (TRUSS PLATE INSTITUTE, 218 NORTH LEE STREET, SUITE 312, ALEXANDRIA, VA, 22314) AND WTCA (WOOD TRUSS COUNCIL OF AMERICA, 6300 ENTERPRISE LANE, MADISON, WI 53719) FOR SAFETY PRACTICES PRIOR TO PERFORMING THESE FUNCTIONS. UNLESS OTHERWISE INDICATED TOP CHORD SHALL HAVE PROPERLY ATTACHED STRUCTURAL PANELS AND BOTTOM CHORD SHALL HAVE A PROPERLY ATTACHED RIGID CEILING.

IMPORTANTFURNISH A COPY OF THIS DESIGN TO THE INSTALLATION CONTRACTOR. ITW BCG, INC. SHALL NOT BE RESPONSIBLE FOR ANY DEVIATION FROM THIS DESIGN; ANY FAILURE TO BUILD THE TRUSS IN COMFORMANCE WITH TPI; OR FABRICATING, HANDLING, SHIPPING, INSTALLING & BRACING OF TRUSSES.
DESIGN CONFORMS WITH APPLICABLE PROVISIONS OF NDS (NATIONAL DESIGN SPEC. BY AF&PA) AND TPI. ITW BCG CONNECTOR PLATES ARE MADE OF 20/18/16GA (W,H/SS/K) ASTM A653 GRADE 40/60 (W, K/H,SS) GALV. STEEL. APPLY PLATES TO EACH FACE OF TRUSS AND, UNLESS OTHERWISE LOCATED ON THIS DESIGN, POSITION PER DRAWINGS 160A. ANY INSPECTION OF PLATES FOLLOWED BY (1) SHALL BE PER ANNEX A3 OF TPI1-2002 SEC.3. A SEAL ON THIS DRAWING INDICATES ACCEPTANCE OF PROFESSIONAL ENGINEERING RESPONSIBILITY SOLELY FOR THE TRUSS COMPONENT DESIGN SHOWN. THE SUITABILITY AND USE OF THIS COMPONENT FOR ANY BUILDING IS THE RESPONSIBILITY OF THE

JAMES F. COLLINS, JR. LICENSE No 52212 STATE OF FLORIDA PROFESSIONAL ENGINEER

TC LL	20.0 PSF	REF R215-- 72029
TC DL	10.0 PSF	DATE 06/25/07
BC DL	10.0 PSF	DRW HCUSR215 07176051
BC LL	0.0 PSF	HC-ENG DAB/WHK *
TOT.LD.	40.0 PSF	SEQN- 181494
DUR.FAC.	1.25	FROM CDM

THIS DWG PREPARED FROM COMPUTER INPUT (LOADS & DIMENSIONS) SUBMITTED BY TRUSS MFR.

Top chord 2x4 SP #2 N
Bot chord 2x4 SP #2 N
Webs 2x4 SP #2 N

Wind reactions based on MWFRS pressures.

Deflection meets L/240 live and L/180 total load.

The overall height of this truss excluding overhang is 3-6-13.

110 mph wind, 15.00 ft mean hgt, ASCE 7-02, CLOSED bldg, not located within 4.50 ft from roof edge, CAT II, EXP B, wind TC DL=5.0 psf, wind BC DL=5.0 psf. Iw=1.00 GCpi(+/-)=0.18

H = recommended connection based on manufacturer tested capacities and calculations. Conditions may exist that require different connections than indicated. Refer to manufacturer publication for additional information.

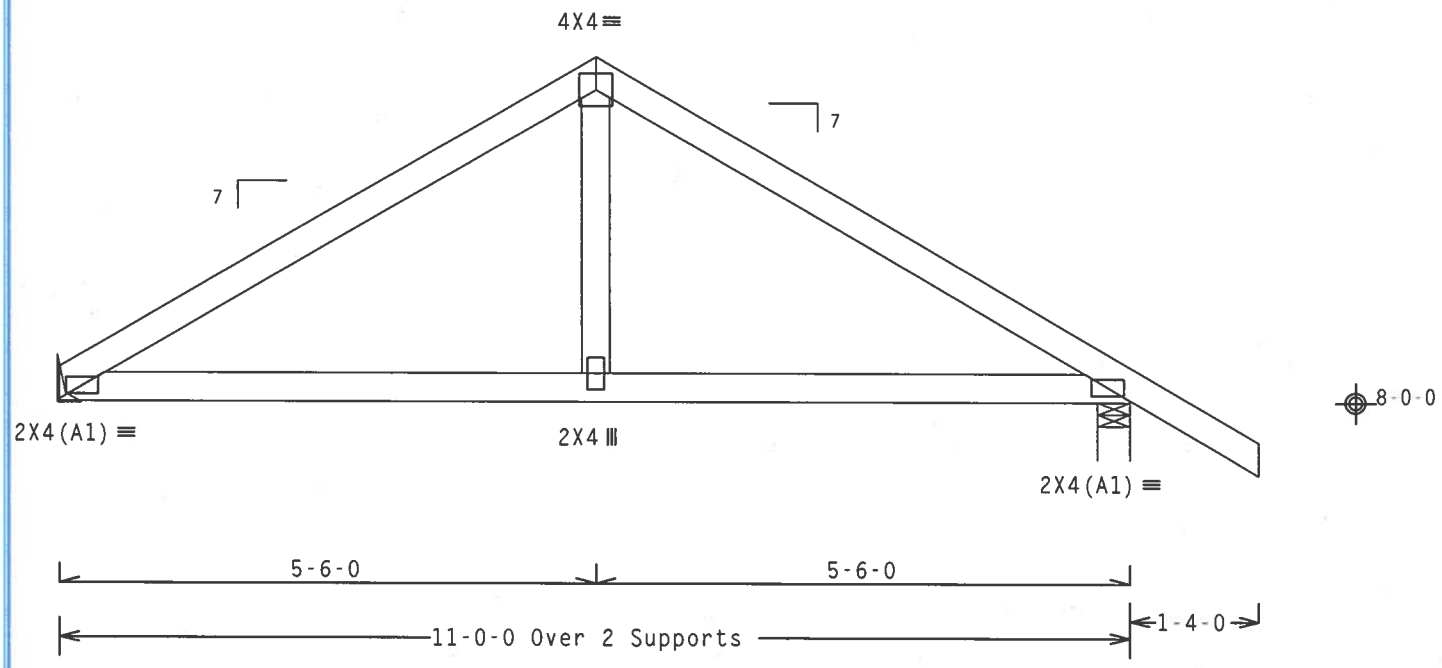

8-0-0

R=450 U=35 H=Simpson LUS24
w/ (2) 10d Common, 0.148"x3.0" nails in Truss
w/ (4) 10d Common, 0.148"x3.0" nails in Girder
Girder is (2)2X6 min. So.Pine

R=555 U=54 W=4"

Design Crit: TPI-2002(STD)/FBC

PLT TYP. Wave Cg/RT=1.00(1.25)/10(0) 7.36.0424.13 QTY:1 FL/-/5/-/-/R/- Scale =.5"/Ft.

ALPINE
ITW Building Components Group, Inc.

WARNING TRUSSES REQUIRE EXTREME CARE IN FABRICATION, HANDLING, SHIPPING, INSTALLING AND BRACING. REFER TO BCSI (BUILDING COMPONENT SAFETY INFORMATION), PUBLISHED BY TPI (TRUSS PLATE INSTITUTE, 218 NORTH LEE STREET, SUITE 312, ALEXANDRIA, VA, 22314) AND WTCA (WOOD TRUSS COUNCIL OF AMERICA, 6300 ENTERPRISE LANE, MADISON, WI 53719) FOR SAFETY PRACTICES PRIOR TO PERFORMING THESE FUNCTIONS. UNLESS OTHERWISE INDICATED TOP CHORD SHALL HAVE PROPERLY ATTACHED STRUCTURAL PANELS AND BOTTOM CHORD SHALL HAVE A PROPERLY ATTACHED RIGID CEILING.

IMPORTANTFURNISH A COPY OF THIS DESIGN TO THE INSTALLATION CONTRACTOR. ITW BCG, INC. SHALL NOT BE RESPONSIBLE FOR ANY DEVIATION FROM THIS DESIGN; ANY FAILURE TO BUILD THE TRUSS IN COMFORMANCE WITH TPI; OR FABRICATING, HANDLING, SHIPPING, INSTALLING & BRACING OF TRUSSES.
DESIGN CONFORMS WITH APPLICABLE PROVISIONS OF NDS (NATIONAL DESIGN SPEC. BY AF&PA) AND TPI. ITW BCG CONNECTOR PLATES ARE MADE OF 20/18/16GA (W,H/SS/K) ASTM A653 GRADE 40/60 (W, K/H,SS) GALV. STEEL. APPLY PLATES TO EACH FACE OF TRUSS AND, UNLESS OTHERWISE LOCATED ON THIS DESIGN, POSITION PER DRAWINGS 160A-Z. ANY INSPECTION OF PLATES FOLLOWED BY (1) SHALL BE PER ANNEX A3 OF TPI1-2002 SEC.3. A SEAL ON THIS DRAWING INDICATES ACCEPTANCE OF PROFESSIONAL ENGINEERING RESPONSIBILITY SOLELY FOR THE TRUSS COMPONENT DESIGN SHOWN. THE SUITABILITY AND USE OF THIS COMPONENT FOR ANY BUILDING IS THE RESPONSIBILITY OF THE

JAMES F. COLLINS LICENSE No. 32212 STATE OF FLORIDA PROFESSIONAL ENGINEER

TC LL	20.0 PSF	REF R215-- 72030
TC DL	10.0 PSF	DATE 06/25/07
BC DL	10.0 PSF	DRW HCUSR215 07176038
BC LL	0.0 PSF	HC-ENG DAB/WHK *
TOT.LD.	40.0 PSF	SEQN- 181489
DUR.FAC.	1.25	FROM CDM

THIS DWG PREPARED FROM COMPUTER INPUT (LOADS & DIMENSIONS) SUBMITTED BY TRUSS MFR.

Top chord 2x4 SP #2 N
Bot chord 2x4 SP #2 N
Webs 2x4 SP #2 N

Wind reactions based on MWFRS pressures.

The overall height of this truss excluding overhang is 3-6-13.

110 mph wind, 15.00 ft mean hgt, ASCE 7-02, CLOSED bldg, Located anywhere in roof, CAT II, EXP B, wind TC DL=5.0 psf, wind BC DL=5.0 psf. Iw=1.00 GCpi(+/-)=0.18

Deflection meets L/240 live and L/180 total load.

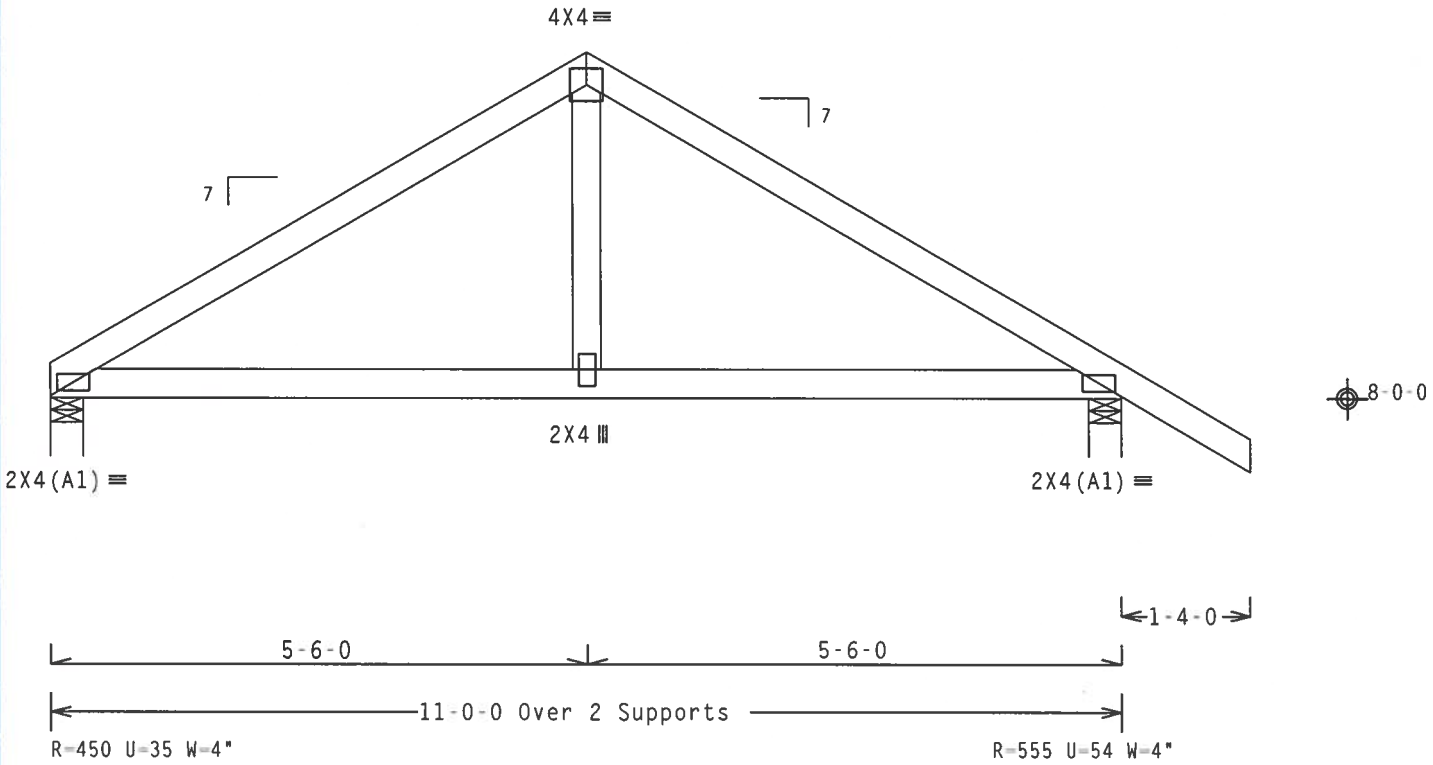

Design Crit: TPI-2002(STD)/FBC

PLT TYP. Wave Cq/RT=1.00(1.25)/10(0) 7.36.0424 QTY:1 FL/-/5/-/-/R/- Scale =.5"/Ft.

ALPINE
ITW Building Components Group, Inc.

WARNING TRUSSES REQUIRE EXTREME CARE IN FABRICATION, HANDLING, SHIPPING, INSTALLING AND BRACING. REFER TO BCSI (BUILDING COMPONENT SAFETY INFORMATION), PUBLISHED BY TPI (TRUSS PLATE INSTITUTE, 218 NORTH LEE STREET, SUITE 312, ALEXANDRIA, VA. 22314) AND WTCA (WOOD TRUSS COUNCIL OF AMERICA, 6300 ENTERPRISE LANE, MADISON, WI 53719) FOR SAFETY PRACTICES PRIOR TO PERFORMING THESE FUNCTIONS. UNLESS OTHERWISE INDICATED TOP CHORD SHALL HAVE PROPERLY ATTACHED STRUCTURAL PANELS AND BOTTOM CHORD SHALL HAVE A PROPERLY ATTACHED RIGID CEILING.

IMPORTANTFURNISH A COPY OF THIS DESIGN TO THE INSTALLATION CONTRACTOR. ITW BCG, INC. SHALL NOT BE RESPONSIBLE FOR ANY DEVIATION FROM THIS DESIGN; ANY FAILURE TO BUILD THE TRUSS IN COMFORMANCE WITH TPI; OR FABRICATING, HANDLING, SHIPPING, INSTALLING & BRACING OF TRUSSES.
DESIGN CONFORMS WITH APPLICABLE PROVISIONS OF NDS (NATIONAL DESIGN SPEC. BY AF&PA) AND TPI. ITW BCG CONNECTOR PLATES ARE MADE OF 20/18/16GA (W,H/SS/K) ASTM A653 GRADE 40/60 (W, K/H,SS) GALV. STEEL. APPLY PLATES TO EACH FACE OF TRUSS AND, UNLESS OTHERWISE LOCATED ON THIS DESIGN, POSITION PER DRAWINGS 160A-Z. ANY INSPECTION OF PLATES FOLLOWED BY (1) SHALL BE PER ANNEX A3 OF TPI1-2002 SEC.3. A SEAL ON THIS DRAWING INDICATES ACCEPTANCE OF PROFESSIONAL ENGINEERING RESPONSIBILITY SOLELY FOR THE TRUSS COMPONENT DESIGN SHOWN. THE SUITABILITY AND USE OF THIS COMPONENT FOR ANY BUILDING IS THE RESPONSIBILITY OF THE

JAMES F. COLLINS, JR. LICENSE No. 52212 STATE OF FLORIDA PROFESSIONAL ENGINEER

TC LL	20.0 PSF	REF	R215-- 72031
TC DL	10.0 PSF	DATE	06/25/07
BC DL	10.0 PSF	DRW	HCUSR215 07176037
BC LL	0.0 PSF	HC-ENG	DAB/WHK *
TOT.LD.	40.0 PSF	SEQN-	181485
DUR.FAC.	1.25	FROM	CDM

THIS DWG PREPARED FROM COMPUTER INPUT (LOADS & DIMENSIONS) SUBMITTED BY TRUSS MFR.

Top chord 2x4 SP #2 N
Bot chord 2x4 SP #2 N
Webs 2x4 SP #2 N

Wind reactions based on MWFRS pressures.

See DWGS A11015EE0207 & GBLLETIN0207 for more requirements.

Deflection meets L/240 live and L/180 total load.

110 mph wind, 15.00 ft mean hgt, ASCE 7-02, CLOSED bldg, Located anywhere in roof, CAT II, EXP B, wind TC DL=5.0 psf, wind BC DL=5.0 psf. Iw=1.00 GCpi(+/-)=0.18

The overall height of this truss excluding overhang is 3-2-12.

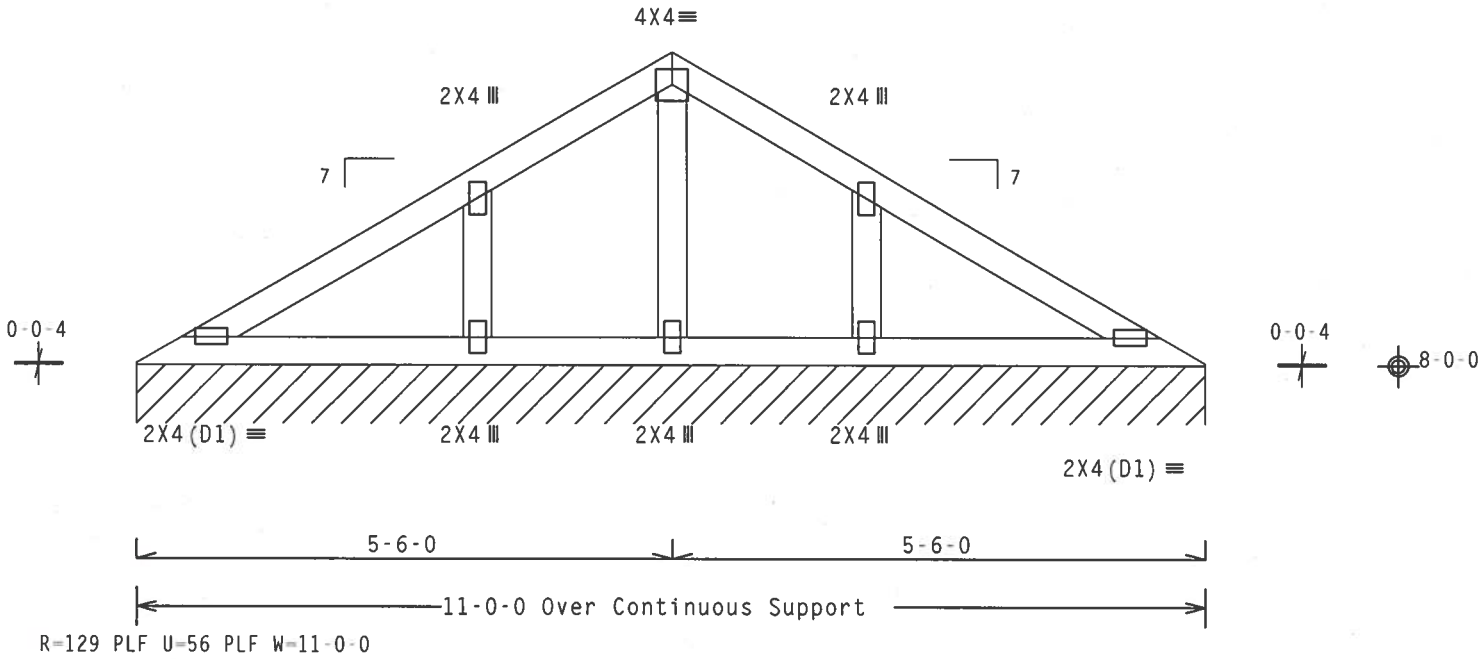

Design Crit: TPI-2002(STD)/FBC

PLT TYP. Wave Cq/RT=1.00(1.25)/10(0) 7.36.0424 QTY:1 FL/-/5/-/-/R/- Scale =.5"/Ft.

ALPINE
ITW Building Components Group, Inc.

WARNING TRUSSES REQUIRE EXTREME CARE IN FABRICATION, HANDLING, SHIPPING, INSTALLING AND BRACING. REFER TO BCSI (BUILDING COMPONENT SAFETY INFORMATION), PUBLISHED BY TPI (TRUSS PLATE INSTITUTE, 218 NORTH LEE STREET, SUITE 312, ALEXANDRIA, VA, 22314) AND WTCA (WOOD TRUSS COUNCIL OF AMERICA, 6300 ENTERPRISE LANE, MADISON, WI 53719) FOR SAFETY PRACTICES PRIOR TO PERFORMING THESE FUNCTIONS. UNLESS OTHERWISE INDICATED TOP CHORD SHALL HAVE PROPERLY ATTACHED STRUCTURAL PANELS AND BOTTOM CHORD SHALL HAVE A PROPERLY ATTACHED RIGID CEILING.

IMPORTANTFURNISH A COPY OF THIS DESIGN TO THE INSTALLATION CONTRACTOR. ITW BCG, INC. SHALL NOT BE RESPONSIBLE FOR ANY DEVIATION FROM THIS DESIGN; ANY FAILURE TO BUILD THE TRUSS IN CONFORMANCE WITH TPI; OR FABRICATING, HANDLING, SHIPPING, INSTALLING & BRACING OF TRUSSES.
DESIGN CONFORMS WITH APPLICABLE PROVISIONS OF NDS (NATIONAL DESIGN SPEC. BY AF&PA) AND TPI. ITW BCG CONNECTOR PLATES ARE MADE OF 20/18/16GA (W,H/SS/K) ASTM A653 GRADE 40/60 (W, K/H,SS) GALV. STEEL. APPLY PLATES TO EACH FACE OF TRUSS AND, UNLESS OTHERWISE LOCATED ON THIS DESIGN, POSITION PER DRAWINGS 160A-Z. ANY INSPECTION OF PLATES FOLLOWED BY (I) SHALL BE PER ANNEX A3 OF TPI1-2002 SEC.3. A SEAL ON THIS DRAWING INDICATES ACCEPTANCE OF PROFESSIONAL ENGINEERING RESPONSIBILITY SOLELY FOR THE TRUSS COMPONENT DESIGN SHOWN. THE SUITABILITY AND USE OF THIS COMPONENT FOR ANY BUILDING IS THE RESPONSIBILITY OF THE

JAMES F. COLLINS JR. LICENSE No. 52212 STATE OF FLORIDA PROFESSIONAL ENGINEER

TC LL	20.0 PSF	REF	R215-- 72032
TC DL	10.0 PSF	DATE	06/25/07
BC DL	10.0 PSF	DRW	HCUSR215 07176036
BC LL	0.0 PSF	HC-ENG	DAB/WHK *
TOT.LD.	40.0 PSF	SEQN-	181713
DUR.FAC.	1.25	FROM	CDM

THIS DWG PREPARED FROM COMPUTER INPUT (LOADS & DIMENSIONS) SUBMITTED BY TRUSS MFR.

Top chord 2x4 SP #2 N
Bot chord 2x4 SP #2 N
Webs 2x4 SP #2 N

Wind reactions based on MWFRS pressures.

See DWGS A11015EE0207 & GBLLETIN0207 for more requirements.

Deflection meets L/240 live and L/180 total load.

110 mph wind, 15.00 ft mean hgt, ASCE 7-02, CLOSED bldg, Located anywhere in roof, CAT II, EXP B, wind TC DL=5.0 psf, wind BC DL=5.0 psf. Iw=1.00 GCpi(+/-)=0.18

The overall height of this truss excluding overhang is 2-5-7.

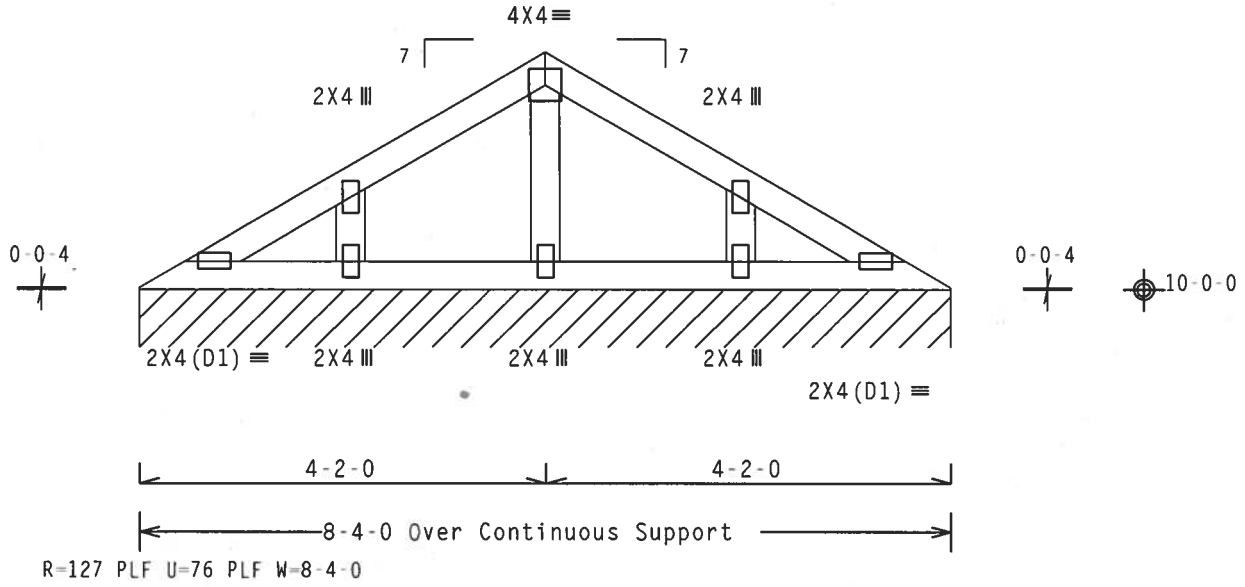

Design Crit: TPI-2002(STD)/FBC
Cq/RT=1.00(1.25)/10(0) 7.36.0424

PLT TYP. Wave

QTY:1 FL/-/5/-/-/R/- Scale =.5"/Ft.

ALPINE
ITW Building Components Group, Inc.

WARNING TRUSSES REQUIRE EXTREME CARE IN FABRICATION, HANDLING, SHIPPING, INSTALLING AND BRACING. REFER TO BCSI (BUILDING COMPONENT SAFETY INFORMATION), PUBLISHED BY TPI (TRUSS PLATE INSTITUTE, 218 NORTH LEE STREET, SUITE 312, ALEXANDRIA, VA, 22314) AND WTCA (WOOD TRUSS COUNCIL OF AMERICA, 6300 ENTERPRISE LANE, MADISON, WI 53719) FOR SAFETY PRACTICES PRIOR TO PERFORMING THESE FUNCTIONS. UNLESS OTHERWISE INDICATED TOP CHORD SHALL HAVE PROPERLY ATTACHED STRUCTURAL PANELS AND BOTTOM CHORD SHALL HAVE A PROPERLY ATTACHED RIGID CEILING.

IMPORTANTFURNISH A COPY OF THIS DESIGN TO THE INSTALLATION CONTRACTOR. ITW BCG, INC. SHALL NOT BE RESPONSIBLE FOR ANY DEVIATION FROM THIS DESIGN; ANY FAILURE TO BUILD THE TRUSS IN CONFORMANCE WITH TPI; OR FABRICATING, HANDLING, SHIPPING, INSTALLING & BRACING OF TRUSSES. DESIGN CONFORMS WITH APPLICABLE PROVISIONS OF NDS (NATIONAL DESIGN SPEC. BY AF&PA) AND TPI. ITW BCG CONNECTOR PLATES ARE MADE OF 20/18/16GA (W,H/SS/K) ASTM A653 GRADE 40/60 (W, K/H,SS) GALV. STEEL. APPLY PLATES TO EACH FACE OF TRUSS AND, UNLESS OTHERWISE LOCATED ON THIS DESIGN, POSITION PER DRAWINGS 160A-Z. ANY INSPECTION OF PLATES FOLLOWED BY (1) SHALL BE PER ANNEX A3 OF TPI1-2002 SEC.3. A SEAL ON THIS DRAWING INDICATES ACCEPTANCE OF PROFESSIONAL ENGINEERING RESPONSIBILITY SOLELY FOR THE TRUSS COMPONENT DESIGN SHOWN. THE SUITABILITY AND USE OF THIS COMPONENT FOR ANY BUILDING IS THE RESPONSIBILITY OF THE

JAMES F. COLLINS JR. LICENSE No. 52212 STATE OF FLORIDA PROFESSIONAL ENGINEER

TC LL	20.0 PSF	REF	R215-- 72033
TC DL	10.0 PSF	DATE	06/25/07
BC DL	10.0 PSF	DRW	HCUSR215 07176048
BC LL	0.0 PSF	HC-ENG	DAB/WHK *
TOT.LD.	40.0 PSF	SEQN-	181511
DUR.FAC.	1.25	FROM	CDM

THIS DWG PREPARED FROM COMPUTER INPUT (LOADS & DIMENSIONS) SUBMITTED BY TRUSS MFR.

Top chord 2x4 SP #2 N
Bot chord 2x4 SP #2 N

Wind reactions based on MWFRS pressures.

The overall height of this truss excluding overhang is 0-11-5.

110 mph wind, 15.00 ft mean hgt, ASCE 7-02, CLOSED bldg, Located anywhere in roof, CAT II, EXP B, wind TC DL=5.0 psf, wind BC DL=5.0 psf. Iw=1.00 GCpi(+/-)=0.18

Deflection meets L/240 live and L/180 total load.

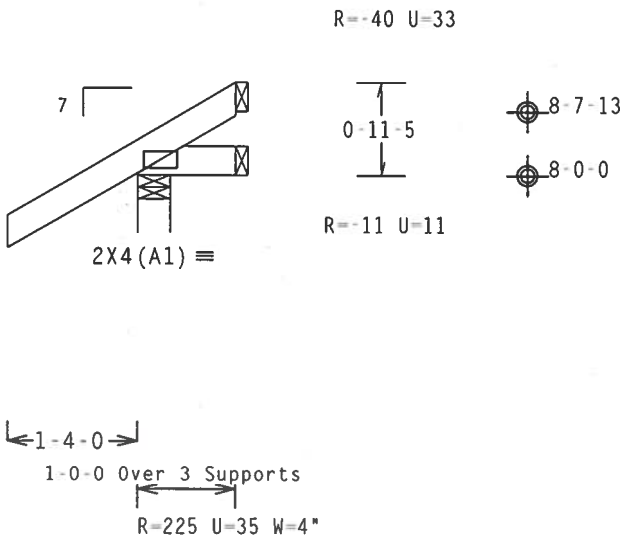

Design Crit: TPI-2002(STD)/FBC
Cq/RT=1.00(1.25)/10(0) 7.36.0424

PLT TYP. Wave

QTY:1 FL/-/5/-/-/R/-

Scale =.5"/Ft.

ALPINE
ITW Building Components Group, Inc.

WARNING TRUSSES REQUIRE EXTREME CARE IN FABRICATION, HANDLING, SHIPPING, INSTALLING AND BRACING. REFER TO BCSI (BUILDING COMPONENT SAFETY INFORMATION), PUBLISHED BY TPI (TRUSS PLATE INSTITUTE, 218 NORTH LEE STREET, SUITE 312, ALEXANDRIA, VA, 22314) AND WTCA (WOOD TRUSS COUNCIL OF AMERICA, 6300 ENTERPRISE LANE, MADISON, WI 53719) FOR SAFETY PRACTICES PRIOR TO PERFORMING THESE FUNCTIONS. UNLESS OTHERWISE INDICATED TOP CHORD SHALL HAVE PROPERLY ATTACHED STRUCTURAL PANELS AND BOTTOM CHORD SHALL HAVE A PROPERLY ATTACHED RIGID CEILING.

IMPORTANTFURNISH A COPY OF THIS DESIGN TO THE INSTALLATION CONTRACTOR. ITW BCG, INC. SHALL NOT BE RESPONSIBLE FOR ANY DEVIATION FROM THIS DESIGN; ANY FAILURE TO BUILD THE TRUSS IN COMFORMANCE WITH TPI; OR FABRICATING, HANDLING, SHIPPING, INSTALLING & BRACING OF TRUSSES.
DESIGN CONFORMS WITH APPLICABLE PROVISIONS OF NDS (NATIONAL DESIGN SPEC, BY AF&PA) AND TPI. ITW BCG CONNECTOR PLATES ARE MADE OF 20/18/16GA (W,H/SS/K) ASTM A653 GRADE 40/60 (W, K/H,SS) GALV. STEEL. APPLY PLATES TO EACH FACE OF TRUSS AND, UNLESS OTHERWISE LOCATED ON THIS DESIGN, POSITION PER DRAWINGS 160A-Z. ANY INSPECTION OF PLATES FOLLOWED BY (1) SHALL BE PER ANNEX A3 OF TPI1-2002 SEC.3. A SEAL ON THIS DRAWING INDICATES ACCEPTANCE OF PROFESSIONAL ENGINEERING RESPONSIBILITY SOLELY FOR THE TRUSS COMPONENT DESIGN SHOWN. THE SUITABILITY AND USE OF THIS COMPONENT FOR ANY BUILDING IS THE RESPONSIBILITY OF THE

JAMES F. COLLINS JR. LICENSE No. 52210 STATE OF FLORIDA PROFESSIONAL ENGINEER

TC LL	20.0 PSF	REF R215-- 72034
TC DL	10.0 PSF	DATE 06/25/07
BC DL	10.0 PSF	DRW HCUSR215-07176016
BC LL	0.0 PSF	HC-ENG DAB/WHK
TOT.LD.	40.0 PSF	SEQN- 181517
DUR.FAC.	1.25	FROM CDM

THIS DWG PREPARED FROM COMPUTER INPUT (LOADS & DIMENSIONS) SUBMITTED BY TRUSS MFR.

Top chord 2x4 SP #2 N
Bot chord 2x4 SP #2 N
Webs 2x4 SP #2 N

Wind reactions based on MWFRS pressures.

Shim all supports to solid bearing.

110 mph wind, 15.00 ft mean hgt, ASCE 7-02, CLOSED bldg, Located anywhere in roof, CAT II, EXP B, wind TC DL=5.0 psf, wind BC DL=5.0 psf. Iw=1.00 GCpi(+/-)=0.18

Deflection meets L/240 live and L/180 total load.

The overall height of this truss excluding overhang is 2-1-5.

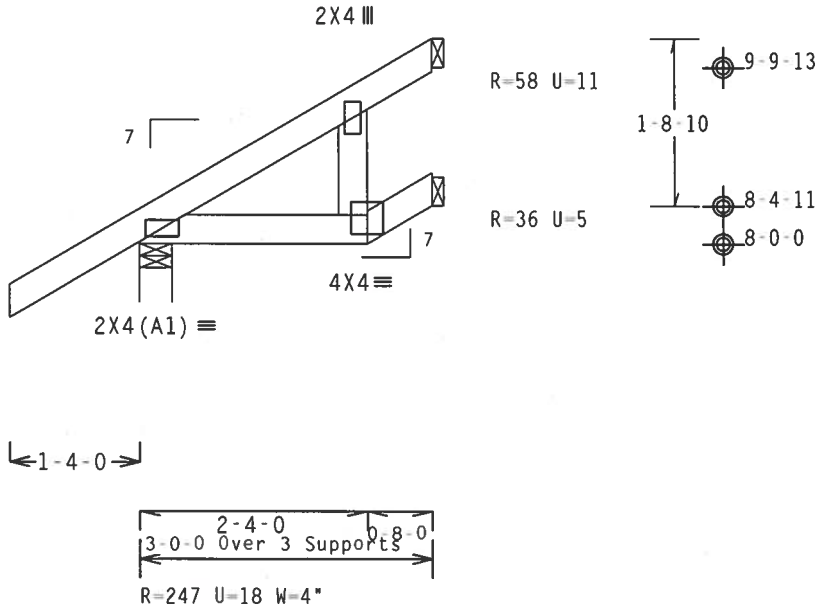

Design Crit: TPI-2002(STD)/FBC
Cq/RT=1.00(1.25)/10(0) 7.36.0424 1

PLT TYP. Wave QTY:1 FL/-/5/-/-/R/- Scale =.5"/Ft.

ALPINE
ITW Building Components Group, Inc.

WARNING TRUSSES REQUIRE EXTREME CARE IN FABRICATION, HANDLING, SHIPPING, INSTALLING AND BRACING. REFER TO BCSI (BUILDING COMPONENT SAFETY INFORMATION), PUBLISHED BY TPI (TRUSS PLATE INSTITUTE, 218 NORTH LEE STREET, SUITE 312, ALEXANDRIA, VA. 22314) AND WTCA (WOOD TRUSS COUNCIL OF AMERICA. 6300 ENTERPRISE LANE, MADISON, WI 53719) FOR SAFETY PRACTICES PRIOR TO PERFORMING THESE FUNCTIONS. UNLESS OTHERWISE INDICATED TOP CHORD SHALL HAVE PROPERLY ATTACHED STRUCTURAL PANELS AND BOTTOM CHORD SHALL HAVE A PROPERLY ATTACHED RIGID CEILING.

IMPORTANT FURNISH A COPY OF THIS DESIGN TO THE INSTALLATION CONTRACTOR. ITW BCG, INC. SHALL NOT BE RESPONSIBLE FOR ANY DEVIATION FROM THIS DESIGN; ANY FAILURE TO BUILD THE TRUSS IN CONFORMANCE WITH TPI; OR FABRICATING, HANDLING, SHIPPING, INSTALLING & BRACING OF TRUSSES.
DESIGN CONFORMS WITH APPLICABLE PROVISIONS OF NDS (NATIONAL DESIGN SPEC, BY AF&PA) AND TPI. ITW BCG CONNECTOR PLATES ARE MADE OF 20/18/16GA (W,H/SS/K) ASTM A653 GRADE 40/60 (W, K/H,SS) GALV. STEEL. APPLY PLATES TO EACH FACE OF TRUSS AND, UNLESS OTHERWISE LOCATED ON THIS DESIGN, POSITION PER DRAWINGS 160A-Z. ANY INSPECTION OF PLATES FOLLOWED BY (I) SHALL BE PER ANNEX A3 OF TPI1-2002 SEC.3. A SEAL ON THIS DRAWING INDICATES ACCEPTANCE OF PROFESSIONAL ENGINEERING RESPONSIBILITY SOLELY FOR THE TRUSS COMPONENT DESIGN SHOWN. THE SUITABILITY AND USE OF THIS COMPONENT FOR ANY BUILDING IS THE RESPONSIBILITY OF THE

JAMES F. COLLINS, JR. LICENSE No. 52212 STATE OF FLORIDA PROFESSIONAL ENGINEER

TC LL	20.0 PSF	REF R215-- 72035
TC DL	10.0 PSF	DATE 06/25/07
BC DL	10.0 PSF	DRW HCUSR215 07176042
BC LL	0.0 PSF	HC-ENG DAB/WHK *
TOT.LD.	40.0 PSF	SEQN- 181549
DUR.FAC.	1.25	FROM CDM

Top chord 2x4 SP #2 N
Bot chord 2x4 SP #2 N

Wind reactions based on MWFRS pressures.

The overall height of this truss excluding overhang is 2-1-5.

110 mph wind, 15.00 ft mean hgt, ASCE 7-02, CLOSED bldg, Located anywhere in roof, CAT II, EXP B, wind TC DL=5.0 psf, wind BC DL=5.0 psf. Iw=1.00 GCpi(+/-)=0.18

Deflection meets L/240 live and L/180 total load.

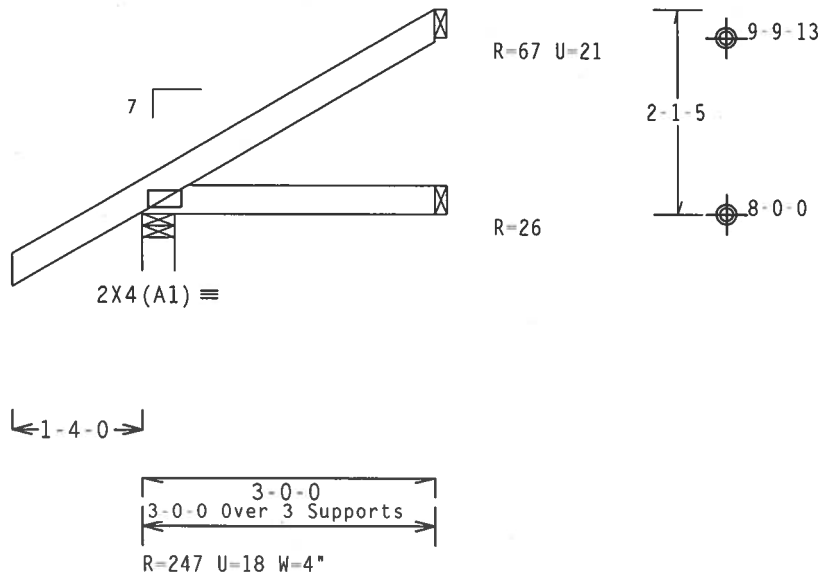

Design Crit: TPI-2002(STD)/FBC
Cq/RT=1.00(1.25)/10(0) 7.36.0424

PLT TYP. Wave QTY:1 FL/-/5/-/-/R/- Scale =.5"/Ft.

ALPINE
ITW Building Components Group, Inc.

WARNING TRUSSES REQUIRE EXTREME CARE IN FABRICATION, HANDLING, SHIPPING, INSTALLING AND BRACING. REFER TO BCSI (BUILDING COMPONENT SAFETY INFORMATION), PUBLISHED BY TPI (TRUSS PLATE INSTITUTE, 218 NORTH LEE STREET, SUITE 312, ALEXANDRIA, VA, 22314) AND WTCA (WOOD TRUSS COUNCIL OF AMERICA, 6300 ENTERPRISE LANE, MADISON, WI 53719) FOR SAFETY PRACTICES PRIOR TO PERFORMING THESE FUNCTIONS. UNLESS OTHERWISE INDICATED TOP CHORD SHALL HAVE PROPERLY ATTACHED STRUCTURAL PANELS AND BOTTOM CHORD SHALL HAVE A PROPERLY ATTACHED RIGID CEILING.

IMPORTANTFURNISH A COPY OF THIS DESIGN TO THE INSTALLATION CONTRACTOR. ITW BCG, INC. SHALL NOT BE RESPONSIBLE FOR ANY DEVIATION FROM THIS DESIGN; ANY FAILURE TO BUILD THE TRUSS IN COMFORMANCE WITH TPI; OR FABRICATING, HANDLING, SHIPPING, INSTALLING & BRACING OF TRUSSES.
DESIGN CONFORMS WITH APPLICABLE PROVISIONS OF NDS (NATIONAL DESIGN SPEC. BY AF&PA) AND TPI. ITW BCG CONNECTOR PLATES ARE MADE OF 20/18/16GA (W,H/SS/K) ASTM A653 GRADE 40/60 (W, K/H,SS) GALV. STEEL. APPLY PLATES TO EACH FACE OF TRUSS AND, UNLESS OTHERWISE LOCATED ON THIS DESIGN, POSITION PER DRAWINGS 160A-Z. ANY INSPECTION OF PLATES FOLLOWED BY (1) SHALL BE PER ANNEX A3 OF TPI1-2002 SEC.3. A SEAL ON THIS DRAWING INDICATES ACCEPTANCE OF PROFESSIONAL ENGINEERING RESPONSIBILITY SOLELY FOR THE TRUSS COMPONENT DESIGN SHOWN. THE SUITABILITY AND USE OF THIS COMPONENT FOR ANY BUILDING IS THE RESPONSIBILITY OF THE

JAMES F. COLLINS JR. LICENSED No. 52212 STATE OF FLORIDA PROFESSIONAL ENGINEER

TC LL	20.0 PSF	REF	R215-- 72036
TC DL	10.0 PSF	DATE	06/25/07
BC DL	10.0 PSF	DRW	HCUSR215 07176014
BC LL	0.0 PSF	HC-ENG	DAB/WHK *
TOT.LD.	40.0 PSF	SEQN-	181520
DUR.FAC.	1.25	FROM	CDM

THIS WAS PREPARED FROM COMPUTER INPUT (LOADS & DIMENSIONS) SUBMITTED BY TRUSS MFR.

Top chord 2x4 SP #2 N
Bot chord 2x4 SP #2 N
Webs 2x4 SP #2 N

Wind reactions based on MWFRS pressures.

The overall height of this truss excluding overhang is 3-3-5.

110 mph wind, 15.00 ft mean hgt, ASCE 7-02, CLOSED bldg, not located within 4.50 ft from roof edge, CAT II, EXP B, wind TC DL=5.0 psf, wind BC DL=5.0 psf. Iw=1.00 GCpi(+/-)=0.18

Deflection meets L/240 live and L/180 total load.

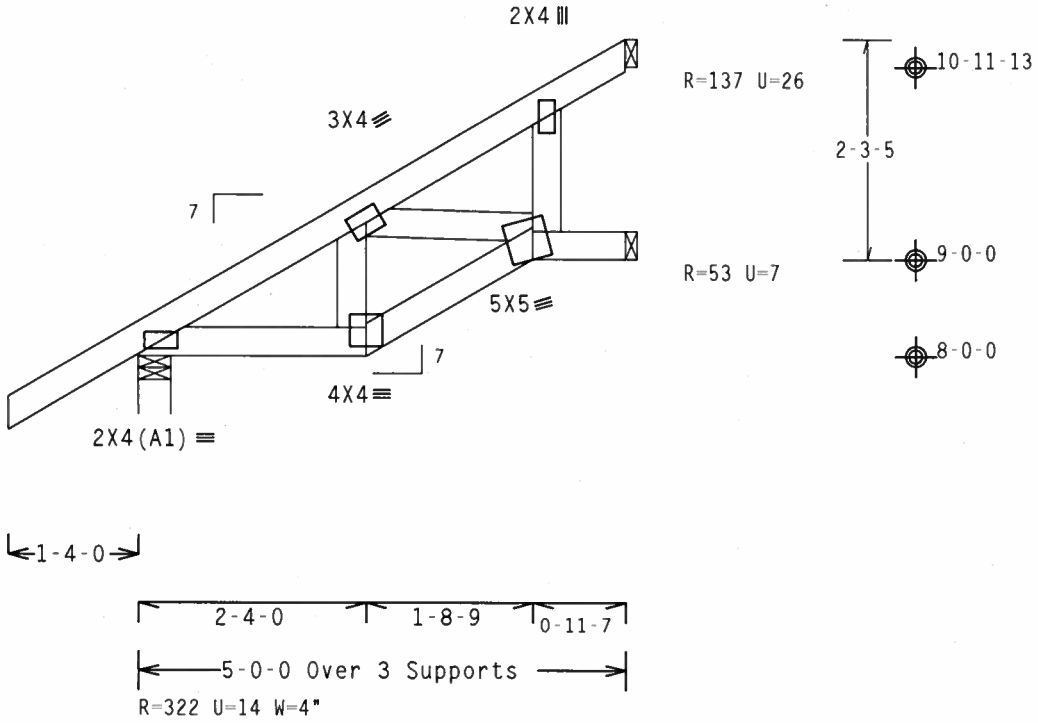

Design Crit: TPI-2002(STD)/FBC

PLT TYP. Wave Cq/RT=1.00(1.25)/10(0) 7.36.0424 QTY:1 FL/-/5/-/-/R/- Scale =.5"/Ft.

ALPINE
ITW Building Components Group, Inc.
Haines City, FL 33844

WARNING TRUSSES REQUIRE EXTREME CARE IN FABRICATION, HANDLING, SHIPPING, INSTALLING AND BRACING. REFER TO BCSI (BUILDING COMPONENT SAFETY INFORMATION), PUBLISHED BY TPI (TRUSS PLATE INSTITUTE, 218 NORTH LEE STREET, SUITE 312, ALEXANDRIA, VA, 22314) AND WTCA (WOOD TRUSS COUNCIL OF AMERICA, 6300 ENTERPRISE LANE, MADISON, WI 53719) FOR SAFETY PRACTICES PRIOR TO PERFORMING THESE FUNCTIONS. UNLESS OTHERWISE INDICATED TOP CHORD SHALL HAVE PROPERLY ATTACHED STRUCTURAL PANELS AND BOTTOM CHORD SHALL HAVE A PROPERLY ATTACHED RIGID CEILING.

IMPORTANTFURNISH A COPY OF THIS DESIGN TO THE INSTALLATION CONTRACTOR. ITW BCG, INC. SHALL NOT BE RESPONSIBLE FOR ANY DEVIATION FROM THIS DESIGN; ANY FAILURE TO BUILD THE TRUSS IN CONFORMANCE WITH TPI; OR FABRICATING, HANDLING, SHIPPING, INSTALLING & BRACING OF TRUSSES. DESIGN CONFORMS WITH APPLICABLE PROVISIONS OF NDS (NATIONAL DESIGN SPEC. BY AF&PA) AND TPI. ITW BCG CONNECTOR PLATES ARE MADE OF 20/18/16GA (W,H/SS/K) ASTM A653 GRADE 40/60 (W, K/H,SS) GALV. STEEL. APPLY PLATES TO EACH FACE OF TRUSS AND, UNLESS OTHERWISE LOCATED ON THIS DESIGN, POSITION PER DRAWINGS 160A-Z. ANY INSPECTION OF PLATES FOLLOWED BY (1) SHALL BE PER ANNEX A3 OF TPI1-2002 SEC.3. A SEAL ON THIS DRAWING INDICATES ACCEPTANCE OF PROFESSIONAL ENGINEERING RESPONSIBILITY SOLELY FOR THE TRUSS COMPONENT DESIGN SHOWN. THE SUITABILITY AND USE OF THIS COMPONENT FOR ANY BUILDING IS THE RESPONSIBILITY OF THE

JAMES F. COLLINS, JR. LICENSE No 52212 STATE OF FLORIDA PROFESSIONAL ENGINEER

TC LL	20.0 PSF	REF	R215-- 72037
TC DL	10.0 PSF	DATE	06/25/07
BC DL	10.0 PSF	DRW	HCUSR215 07176041
BC LL	0.0 PSF	HC-ENG	DAB/WHK *
TOT.LD.	40.0 PSF	SEQN-	181552
DUR.FAC.	1.25	FROM	CDM

THIS DWG PREPARED FROM COMPUTER INPUT (LOADS & DIMENSIONS) SUBMITTED BY TRUSS MFR.

Top chord 2x4 SP #2 N
Bot chord 2x4 SP #2 N

Wind reactions based on MWFRS pressures.

The overall height of this truss excluding overhang is 3-3-5.

110 mph wind, 15.00 ft mean hgt, ASCE 7-02, CLOSED bldg, not located within 4.50 ft from roof edge, CAT II, EXP B, wind TC DL=5.0 psf, wind BC DL=5.0 psf. Iw=1.00 GCpi(+/-)=0.18

Deflection meets L/240 live and L/180 total load.

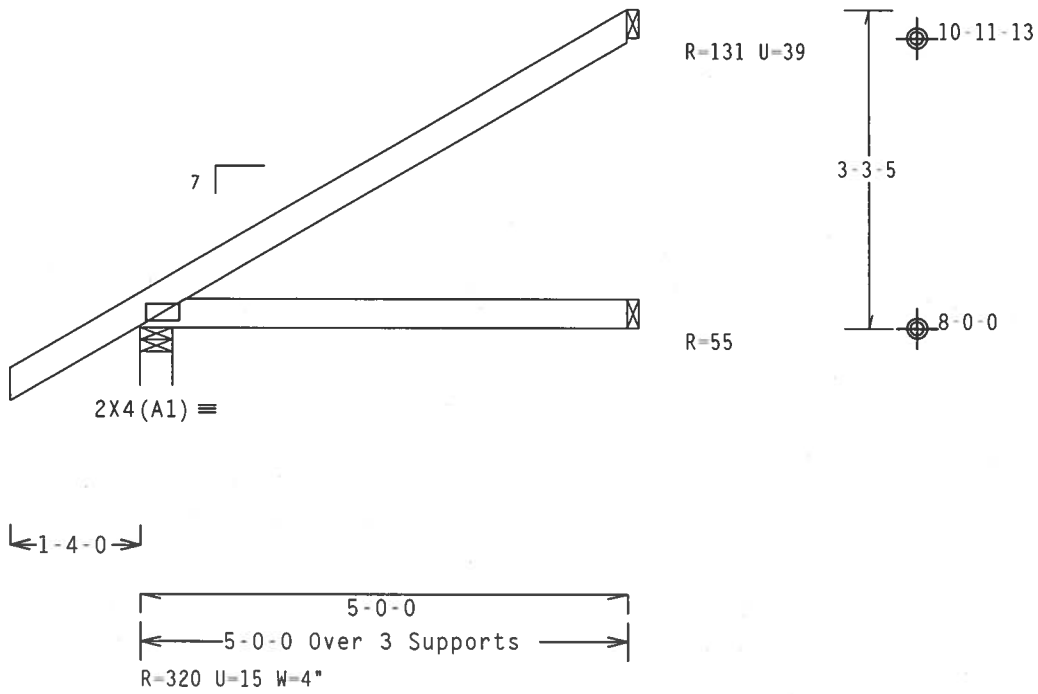

Design Crit: TPI-2002(STD)/FBC
Cq/RT=1.00(1.25)/10(0)

PLT TYP. Wave 7.36.0424 QTY:1 FL/-/5/-/-/R/- Scale =.5"/Ft.

ALPINE
ITW Building Components Group, Inc.

WARNING TRUSSES REQUIRE EXTREME CARE IN FABRICATION, HANDLING, SHIPPING, INSTALLING AND BRACING. REFER TO BCSI (BUILDING COMPONENT SAFETY INFORMATION), PUBLISHED BY TPI (TRUSS PLATE INSTITUTE, 218 NORTH LEE STREET, SUITE 312, ALEXANDRIA, VA, 22314) AND WTCA (WOOD TRUSS COUNCIL OF AMERICA, 6300 ENTERPRISE LANE, MADISON, WI 53719) FOR SAFETY PRACTICES PRIOR TO PERFORMING THESE FUNCTIONS. UNLESS OTHERWISE INDICATED TOP CHORD SHALL HAVE PROPERLY ATTACHED STRUCTURAL PANELS AND BOTTOM CHORD SHALL HAVE A PROPERLY ATTACHED RIGID CEILING.

IMPORTANTFURNISH A COPY OF THIS DESIGN TO THE INSTALLATION CONTRACTOR. ITW BCG, INC. SHALL NOT BE RESPONSIBLE FOR ANY DEVIATION FROM THIS DESIGN; ANY FAILURE TO BUILD THE TRUSS IN CONFORMANCE WITH TPI; OR FABRICATING, HANDLING, SHIPPING, INSTALLING & BRACING OF TRUSSES.
DESIGN CONFORMS WITH APPLICABLE PROVISIONS OF NDS (NATIONAL DESIGN SPEC. BY AF&PA) AND TPI. ITW BCG CONNECTOR PLATES ARE MADE OF 20/18/16GA (W,H/SS/K) ASTM A653 GRADE 40/60 (W, K/H,SS) GALV. STEEL. APPLY PLATES TO EACH FACE OF TRUSS AND, UNLESS OTHERWISE LOCATED ON THIS DESIGN, POSITION PER DRAWINGS 160A-Z. ANY INSPECTION OF PLATES FOLLOWED BY (I) SHALL BE PER ANNEX A3 OF TPI1-2002 SEC.3. A SEAL ON THIS DRAWING INDICATES ACCEPTANCE OF PROFESSIONAL ENGINEERING RESPONSIBILITY SOLELY FOR THE TRUSS COMPONENT DESIGN SHOWN. THE SUITABILITY AND USE OF THIS COMPONENT FOR ANY BUILDING IS THE RESPONSIBILITY OF THE

JAMES F. COLLINS, JR. LICENSE No. 52212 STATE OF FLORIDA PROFESSIONAL ENGINEER

TC LL	20.0 PSF	REF	R215-- 72038
TC DL	10.0 PSF	DATE	06/25/07
BC DL	10.0 PSF	DRW	HCUSR215 07176013
BC LL	0.0 PSF	HC-ENG	DAB/WHK *
TOT.LD.	40.0 PSF	SEQN-	181523
DUR.FAC.	1.25	FROM	CDM

THIS DWG PREPARED FROM COMPUTER INPUT (LOADS & DIMENSIONS) SUBMITTED BY TRUSS MFR.

Top chord 2x4 SP #2 N
Bot chord 2x4 SP #2 N

Wind reactions based on MWFRS pressures.

The overall height of this truss excluding overhang is 4-5-5.

110 mph wind, 15.00 ft mean hgt, ASCE 7-02, CLOSED bldg, not located within 4.50 ft from roof edge, CAT II, EXP B, wind TC DL=5.0 psf, wind BC DL=5.0 psf. Iw=1.00 GCpi(+/-)=0.18

Deflection meets L/240 live and L/180 total load.

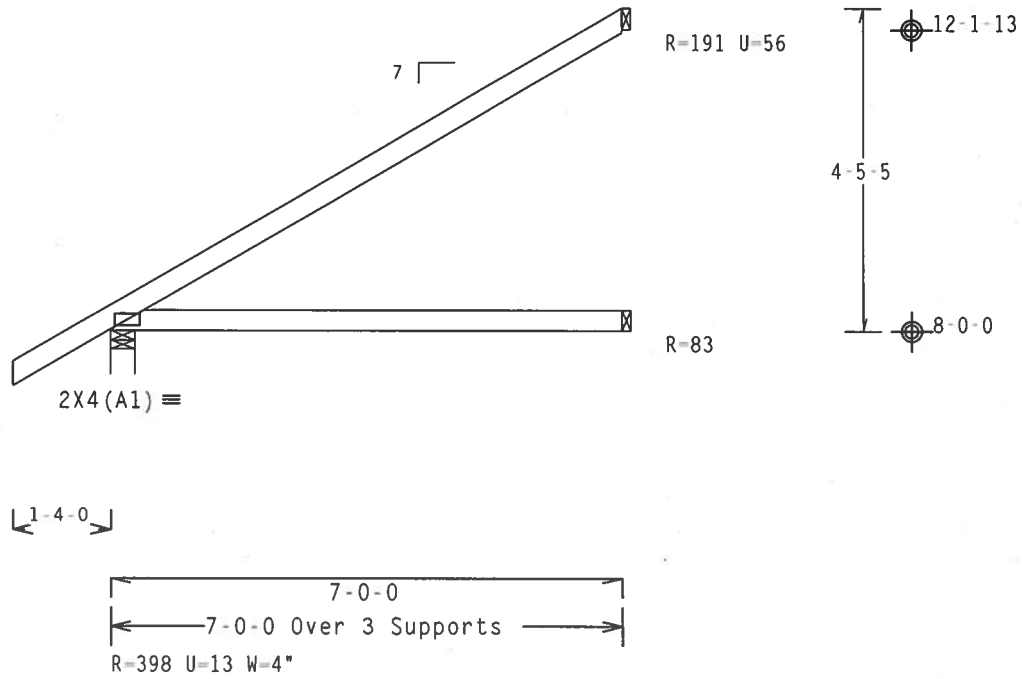

Design Crit: TPI-2002(STD)/FBC
Cq/RT=1.00(1.25)/10(0)

PLT TYP. Wave | 7.36.0424.1 | QTY:1 | FL/-/5/-/-/R/- | Scale =.375"/Ft.

ALPINE
ITW Building Components Group, Inc.

WARNING TRUSSES REQUIRE EXTREME CARE IN FABRICATION, HANDLING, SHIPPING, INSTALLING AND BRACING. REFER TO BCSI (BUILDING COMPONENT SAFETY INFORMATION), PUBLISHED BY TPI (TRUSS PLATE INSTITUTE, 218 NORTH LEE STREET, SUITE 312, ALEXANDRIA, VA, 22314) AND WTCA (WOOD TRUSS COUNCIL OF AMERICA, 6300 ENTERPRISE LANE, MADISON, WI 53719) FOR SAFETY PRACTICES PRIOR TO PERFORMING THESE FUNCTIONS. UNLESS OTHERWISE INDICATED TOP CHORD SHALL HAVE PROPERLY ATTACHED STRUCTURAL PANELS AND BOTTOM CHORD SHALL HAVE A PROPERLY ATTACHED RIGID CEILING.

IMPORTANTFURNISH A COPY OF THIS DESIGN TO THE INSTALLATION CONTRACTOR. ITW BCG, INC. SHALL NOT BE RESPONSIBLE FOR ANY DEVIATION FROM THIS DESIGN; ANY FAILURE TO BUILD THE TRUSS IN COMFORMANCE WITH TPI; OR FABRICATING, HANDLING, SHIPPING, INSTALLING & BRACING OF TRUSSES.
DESIGN CONFORMS WITH APPLICABLE PROVISIONS OF NDS (NATIONAL DESIGN SPEC. BY AF&PA) AND TPI. ITW BCG CONNECTOR PLATES ARE MADE OF 20/18/16GA (W,H/SS/K) ASTM A653 GRADE 40/60 (W, K/H,SS) GALV. STEEL. APPLY PLATES TO EACH FACE OF TRUSS AND, UNLESS OTHERWISE LOCATED ON THIS DESIGN, POSITION PER DRAWINGS 160A-Z. ANY INSPECTION OF PLATES FOLLOWED BY (1) SHALL BE PER ANNEX A3 OF TPI1-2002 SEC.3. A SEAL ON THIS DRAWING INDICATES ACCEPTANCE OF PROFESSIONAL ENGINEERING RESPONSIBILITY SOLELY FOR THE TRUSS COMPONENT DESIGN SHOWN. THE SUITABILITY AND USE OF THIS COMPONENT FOR ANY BUILDING IS THE RESPONSIBILITY OF THE

JAMES F. COLLINS JR. LICENSE No. 52212 STATE OF FLORIDA PROFESSIONAL ENGINEER

TC LL	20.0 PSF	REF	R215-- 72039
TC DL	10.0 PSF	DATE	06/25/07
BC DL	10.0 PSF	DRW	HCUSR215 07176017
BC LL	0.0 PSF	HC-ENG	DAB/WHK *
TOT.LD.	40.0 PSF	SEQN-	181526
DUR.FAC.	1.25	FROM	CDM

THIS DWG PREPARED FROM COMPUTER INPUT (LOADS & DIMENSIONS) SUBMITTED BY TRUSS MFR.

Top chord 2x4 SP #2 N
Bot chord 2x6 SP #2 N
Webs 2x4 SP #2 N

SPECIAL LOADS
------(LUMBER DUR.FAC.=1.25 / PLATE DUR.FAC.=1.25)
TC - From 63 PLF at 0.00 to 63 PLF at 7.00
BC - From 20 PLF at 0.00 to 20 PLF at 7.00
PLB- 450 LB Conc. Load at (2.06,8.04), (4.06,8.04)
PLB- 432 LB Conc. Load at (6.06,8.04)

Wind reactions based on MWFRS pressures.

Right end vertical not exposed to wind pressure.

Deflection meets L/240 live and L/180 total load.

The overall height of this truss excluding overhang is 4-5-5.

2 COMPLETE TRUSSES REQUIRED

Nailing Schedule: (0.131"x3"_Gun_nails)
Top Chord: 1 Row @12.00" o.c.
Bot Chord: 1 Row @ 8.00" o.c.
Webs : 1 Row @ 4" o.c.
Use equal spacing between rows and stagger nails in each row to avoid splitting.

110 mph wind, 15.00 ft mean hgt, ASCE 7-02, CLOSED bldg, not located within 4.50 ft from roof edge, CAT II, EXP B, wind TC DL=5.0 psf, wind BC DL=5.0 psf. Iw=1.00 GCpi(+/-)=0.18

H = recommended connection based on manufacturer tested capacities and calculations. Conditions may exist that require different connections than indicated. Refer to manufacturer publication for additional information.

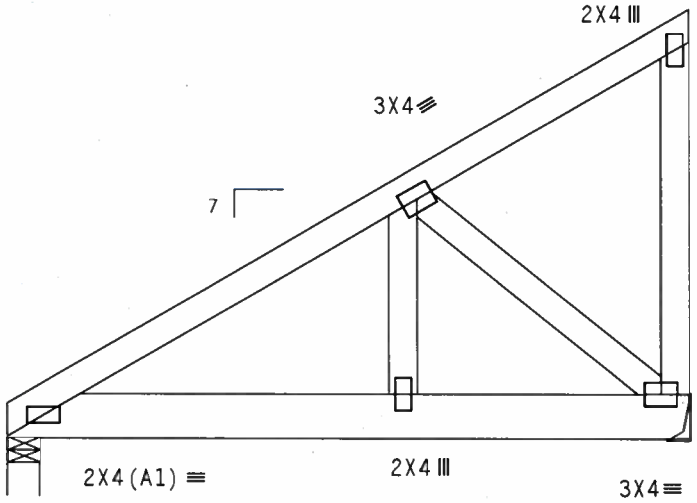

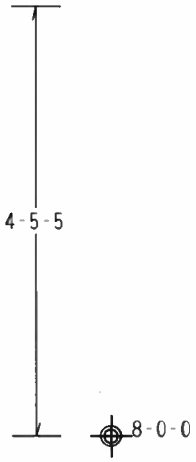

R=1041 U=108 H=Simpson LUS26-2
w/ (4) 10d Common, 0.148"x3.0" nails in Truss
w/ (4) 10d Common, 0.148"x3.0" nails in Girder
Girder is (1)2X6 min. So.Pine

7-0-0 Over 2 Supports

R=873 U=79 W=4"

Design Crit: TPI-2002(STD)/FBC
PLT TYP. Wave Cq/RT=1.00(1.25)/10(0) 7.36.0424.12 QTY:1 FL/-/5/-/-/R/- Scale =.5"/Ft.

ALPINE
ITW Building Components Group, Inc.

WARNING TRUSSES REQUIRE EXTREME CARE IN FABRICATION, HANDLING, SHIPPING, INSTALLING AND BRACING. REFER TO BCSI (BUILDING COMPONENT SAFETY INFORMATION), PUBLISHED BY TPI (TRUSS PLATE INSTITUTE, 218 NORTH LEE STREET, SUITE 312, ALEXANDRIA, VA, 22314) AND WTCA (WOOD TRUSS COUNCIL OF AMERICA, 6300 ENTERPRISE LANE, MADISON, WI 53719) FOR SAFETY PRACTICES PRIOR TO PERFORMING THESE FUNCTIONS. UNLESS OTHERWISE INDICATED TOP CHORD SHALL HAVE PROPERLY ATTACHED STRUCTURAL PANELS AND BOTTOM CHORD SHALL HAVE A PROPERLY ATTACHED RIGID CEILING.

IMPORTANTFURNISH A COPY OF THIS DESIGN TO THE INSTALLATION CONTRACTOR. ITW BCG, INC. SHALL NOT BE RESPONSIBLE FOR ANY DEVIATION FROM THIS DESIGN; ANY FAILURE TO BUILD THE TRUSS IN CONFORMANCE WITH TPI; OR FABRICATING, HANDLING, SHIPPING, INSTALLING & BRACING OF TRUSSES.
DESIGN CONFORMS WITH APPLICABLE PROVISIONS OF NDS (NATIONAL DESIGN SPEC. BY AF&PA) AND TPI. ITW BCG CONNECTOR PLATES ARE MADE OF 20/18/16GA (W,H/SS/K) ASTM A653 GRADE 40/60 (W, K/H,SS) GALV. STEEL. APPLY PLATES TO EACH FACE OF TRUSS AND, UNLESS OTHERWISE LOCATED ON THIS DESIGN, POSITION PER DRAWINGS 160A-Z. ANY INSPECTION OF PLATES FOLLOWED BY (I) SHALL BE PER ANNEX A3 OF TPI1-2002 SEC.3. A SEAL ON THIS DRAWING INDICATES ACCEPTANCE OF PROFESSIONAL ENGINEERING RESPONSIBILITY SOLELY FOR THE TRUSS COMPONENT DESIGN SHOWN. THE SUITABILITY AND USE OF THIS COMPONENT FOR ANY BUILDING IS THE RESPONSIBILITY OF THE

JAMES E. COLLINS, JR. LICENSE No. 32212 STATE OF FLORIDA PROFESSIONAL ENGINEER

TC LL	20.0 PSF	REF	R215-- 72040
TC DL	10.0 PSF	DATE	06/25/07
BC DL	10.0 PSF	DRW	HCUSR215 07176035
BC LL	0.0 PSF	HC-ENG	DAB/WHK
TOT.LD.	40.0 PSF	SEQN-	181531
DUR.FAC.	1.25	FROM	CDM

THIS DWG PREPARED FROM COMPUTER INPUT (LOADS & DIMENSIONS) SUBMITTED BY TRUSS MFR.

Top chord 2x4 SP #2 N
Bot chord 2x4 SP #2 N
Webs 2x4 SP #2 N

Wind reactions based on MWFRS pressures.

Shim all supports to solid bearing.

110 mph wind, 15.00 ft mean hgt, ASCE 7-02, CLOSED bldg, not located within 4.50 ft from roof edge, CAT II, EXP B, wind TC DL=5.0 psf, wind BC DL=5.0 psf. Iw=1.00 GCpi(+/-)=0.18

Deflection meets L/240 live and L/180 total load.

The overall height of this truss excluding overhang is 4-5-5.

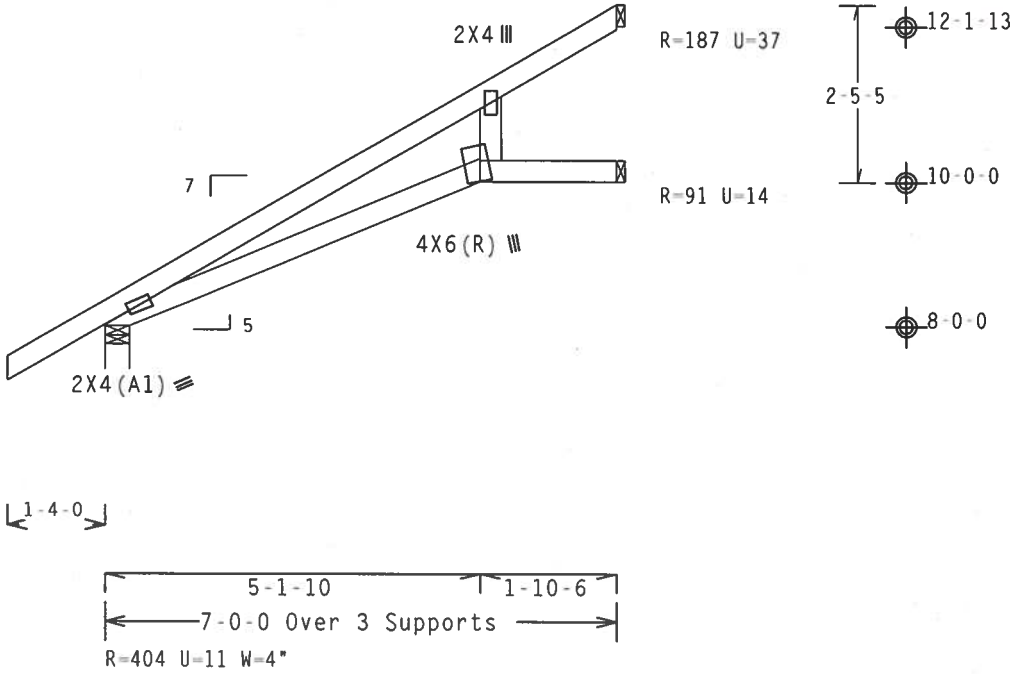

Design Crit: TPI-2002(STD)/FBC
Cq/RT=1.00(1.25)/10(0) 7.36.0424.12

PLT TYP. Wave QTY:1 FL/-/5/-/-/R/- Scale =.375"/Ft.

ALPINE
ITW Building Components Group, Inc.

WARNING TRUSSES REQUIRE EXTREME CARE IN FABRICATION, HANDLING, SHIPPING, INSTALLING AND BRACING. REFER TO BCSI (BUILDING COMPONENT SAFETY INFORMATION), PUBLISHED BY TPI (TRUSS PLATE INSTITUTE, 218 NORTH LEE STREET, SUITE 312, ALEXANDRIA, VA. 22314) AND WTCA (WOOD TRUSS COUNCIL OF AMERICA, 6300 ENTERPRISE LANE, MADISON, WI 53719) FOR SAFETY PRACTICES PRIOR TO PERFORMING THESE FUNCTIONS. UNLESS OTHERWISE INDICATED TOP CHORD SHALL HAVE PROPERLY ATTACHED STRUCTURAL PANELS AND BOTTOM CHORD SHALL HAVE A PROPERLY ATTACHED RIGID CEILING.

IMPORTANTFURNISH A COPY OF THIS DESIGN TO THE INSTALLATION CONTRACTOR. ITW BCG, INC. SHALL NOT BE RESPONSIBLE FOR ANY DEVIATION FROM THIS DESIGN; ANY FAILURE TO BUILD THE TRUSS IN COMFORMANCE WITH TPI; OR FABRICATING, HANDLING, SHIPPING, INSTALLING & BRACING OF TRUSSES.
DESIGN CONFORMS WITH APPLICABLE PROVISIONS OF NDS (NATIONAL DESIGN SPEC. BY AF&PA) AND TPI. ITW BCG CONNECTOR PLATES ARE MADE OF 20/18/16GA (W,H/SS/K) ASTM A653 GRADE 40/60 (W, K/H,SS) GALV. STEEL. APPLY PLATES TO EACH FACE OF TRUSS AND, UNLESS OTHERWISE LOCATED ON THIS DESIGN, POSITION PER DRAWINGS 160A-Z. ANY INSPECTION OF PLATES FOLLOWED BY (1) SHALL BE PER ANNEX A3 OF TPI1-2002 SEC.3. A SEAL ON THIS DRAWING INDICATES ACCEPTANCE OF PROFESSIONAL ENGINEERING RESPONSIBILITY SOLELY FOR THE TRUSS COMPONENT

JAMES F. COLLINS, JR. LICENSE No. 52212 STATE OF FLORIDA PROFESSIONAL ENGINEER

TC LL	20.0 PSF	REF	R215-- 72041
TC DL	10.0 PSF	DATE	06/25/07
BC DL	10.0 PSF	DRW	HCUSR215 07176046
BC LL	0.0 PSF	HC-ENG	DAB/WHK *
TOT.LD.	40.0 PSF	SEQN-	183082
DUR.FAC.	1.25	FROM	CDM

THIS DWG PREPARED FROM COMPUTER INPUT (LOADS & DIMENSIONS) SUBMITTED BY TRUSS MFR.

Top chord 2x4 SP #2 N
Bot chord 2x4 SP #2 N
Webs 2x4 SP #2 N

Wind reactions based on MWFRS pressures.

Deflection meets L/240 live and L/180 total load.

(**) 2 plate(s) require special positioning. Refer to scaled plate plot details for special positioning requirements.

110 mph wind, 15.00 ft mean hgt, ASCE 7-02, CLOSED bldg, not located within 4.50 ft from roof edge, CAT II, EXP B, wind TC DL=5.0 psf, wind BC DL=5.0 psf. Iw=1.00 GCpi(+/-)=0.18

The overall height of this truss excluding overhang is 4-5-5.

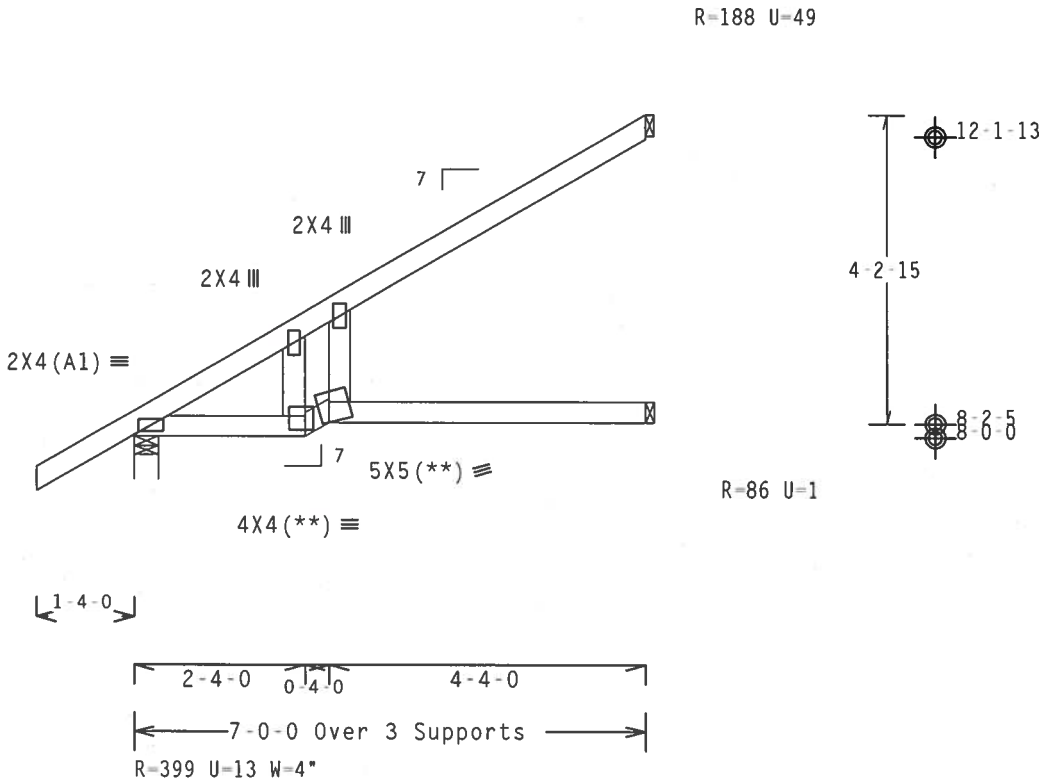

Design Crit: TPI-2002(STD)/FBC
Cq/RT=1.00(1.25)/10(0) 7.36.0424

PLT TYP. Wave QTY:1 FL/-/5/-/-/R/- Scale =.375"/Ft.

ALPINE
ITW Building Components Group, Inc.

WARNING TRUSSES REQUIRE EXTREME CARE IN FABRICATION, HANDLING, SHIPPING, INSTALLING AND BRACING. REFER TO BCSI (BUILDING COMPONENT SAFETY INFORMATION), PUBLISHED BY TPI (TRUSS PLATE INSTITUTE, 218 NORTH LEE STREET, SUITE 312, ALEXANDRIA, VA, 22314) AND WTCA (WOOD TRUSS COUNCIL OF AMERICA, 6300 ENTERPRISE LANE, MADISON, WI 53719) FOR SAFETY PRACTICES PRIOR TO PERFORMING THESE FUNCTIONS. UNLESS OTHERWISE INDICATED TOP CHORD SHALL HAVE PROPERLY ATTACHED STRUCTURAL PANELS AND BOTTOM CHORD SHALL HAVE A PROPERLY ATTACHED RIGID CEILING.

IMPORTANTFURNISH A COPY OF THIS DESIGN TO THE INSTALLATION CONTRACTOR. ITW BCG, INC. SHALL NOT BE RESPONSIBLE FOR ANY DEVIATION FROM THIS DESIGN; ANY FAILURE TO BUILD THE TRUSS IN CONFORMANCE WITH TPI; OR FABRICATING, HANDLING, SHIPPING, INSTALLING & BRACING OF TRUSSES.
DESIGN CONFORMS WITH APPLICABLE PROVISIONS OF NDS (NATIONAL DESIGN SPEC. BY AF&PA) AND TPI. ITW BCG CONNECTOR PLATES ARE MADE OF 20/18/16GA (W.H/SS/K) ASTM A653 GRADE 40/60 (W. K/H.SS) GALV. STEEL. APPLY PLATES TO EACH FACE OF TRUSS AND, UNLESS OTHERWISE LOCATED ON THIS DESIGN, POSITION PER DRAWINGS 160A-Z. ANY INSPECTION OF PLATES FOLLOWED BY (1) SHALL BE PER ANNEX A3 OF TPI1-2002 SEC.3. A SEAL ON THIS DRAWING INDICATES ACCEPTANCE OF PROFESSIONAL ENGINEERING RESPONSIBILITY SOLELY FOR THE TRUSS COMPONENT DESIGN SHOWN. THE SUITABILITY AND USE OF THIS COMPONENT FOR ANY BUILDING IS THE RESPONSIBILITY OF THE

JAMES F. COLLINS JR. LICENSE No. 52212 STATE OF FLORIDA PROFESSIONAL ENGINEER

TC LL	20.0 PSF	REF	R215-- 72042
TC DL	10.0 PSF	DATE	06/25/07
BC DL	10.0 PSF	DRW	HCUSR215 07176045
BC LL	0.0 PSF	HC-ENG	DAB/WHK
TOT.LD.	40.0 PSF	SEQN-	181558
DUR.FAC.	1.25	FROM	CDM

THIS DWG PREPARED FROM COMPUTER INPUT (LOADS & DIMENSIONS) SUBMITTED BY TRUSS MFR.

Top chord 2x4 SP #2 N
Bot chord 2x4 SP #2 N
Webs 2x4 SP #2 N

Wind reactions based on MWFRS pressures.

The overall height of this truss excluding overhang is 4-5-5.

110 mph wind, 15.00 ft mean hgt, ASCE 7-02, CLOSED bldg, not located within 4.50 ft from roof edge, CAT II, EXP B, wind TC DL=5.0 psf, wind BC DL=5.0 psf. Iw=1.00 GCpi(+/-)=0.18

Deflection meets L/240 live and L/180 total load.

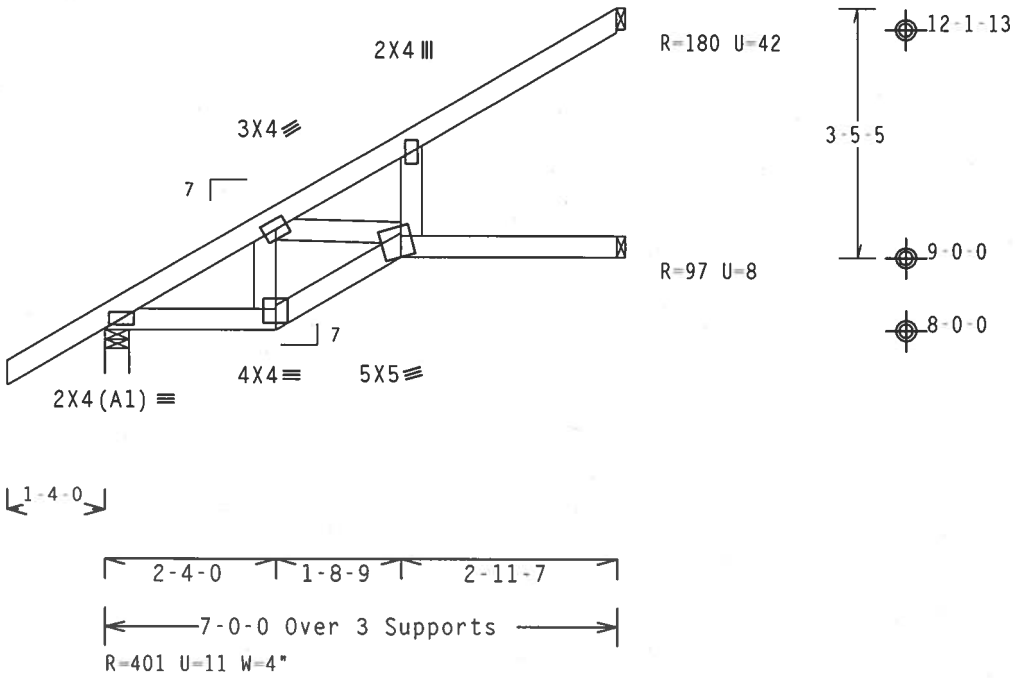

Design Crit: TPI-2002(STD)/FBC
Cq/RT=1.00(1.25)/10(0) 7.36.0424

PLT TYP. Wave QTY:1 FL/-/5/-/-/R/- Scale =.375"/Ft.

ALPINE
ITW Building Components Group, Inc.

WARNING TRUSSES REQUIRE EXTREME CARE IN FABRICATION, HANDLING, SHIPPING, INSTALLING AND BRACING. REFER TO BCSI (BUILDING COMPONENT SAFETY INFORMATION), PUBLISHED BY TPI (TRUSS PLATE INSTITUTE, 218 NORTH LEE STREET, SUITE 312, ALEXANDRIA, VA. 22314) AND WTCA (WOOD TRUSS COUNCIL OF AMERICA, 6300 ENTERPRISE LANE, MADISON, WI 53719) FOR SAFETY PRACTICES PRIOR TO PERFORMING THESE FUNCTIONS. UNLESS OTHERWISE INDICATED TOP CHORD SHALL HAVE PROPERLY ATTACHED STRUCTURAL PANELS AND BOTTOM CHORD SHALL HAVE A PROPERLY ATTACHED RIGID CEILING.

IMPORTANTFURNISH A COPY OF THIS DESIGN TO THE INSTALLATION CONTRACTOR. ITW BCG, INC. SHALL NOT BE RESPONSIBLE FOR ANY DEVIATION FROM THIS DESIGN; ANY FAILURE TO BUILD THE TRUSS IN CONFORMANCE WITH TPI; OR FABRICATING, HANDLING, SHIPPING, INSTALLING & BRACING OF TRUSSES.
DESIGN CONFORMS WITH APPLICABLE PROVISIONS OF NDS (NATIONAL DESIGN SPEC. BY AF&PA) AND TPI. ITW BCG CONNECTOR PLATES ARE MADE OF 20/18/16GA (W,H/SS/K) ASTM A653 GRADE 40/60 (W, K/H,SS) GALV. STEEL. APPLY PLATES TO EACH FACE OF TRUSS AND, UNLESS OTHERWISE LOCATED ON THIS DESIGN, POSITION PER DRAWINGS 160A-Z. ANY INSPECTION OF PLATES FOLLOWED BY (!) SHALL BE PER ANNEX A3 OF TPI1-2002 SEC.3. A SEAL ON THIS DRAWING INDICATES ACCEPTANCE OF PROFESSIONAL ENGINEERING RESPONSIBILITY SOLELY FOR THE TRUSS COMPONENT DESIGN SHOWN. THE SUITABILITY AND USE OF THIS COMPONENT FOR ANY BUILDING IS THE RESPONSIBILITY OF THE

JAMES F. COLLINS, JR. LICENSED No.52212 STATE OF FLORIDA PROFESSIONAL ENGINEER

TC LL	20.0 PSF	REF R215-- 72043
TC DL	10.0 PSF	DATE 06/25/07
BC DL	10.0 PSF	DRW HCUSR215 07176043
BC LL	0.0 PSF	HC-ENG DAB/WHK *
TOT.LD.	40.0 PSF	SEQN- 181555
DUR.FAC.	1.25	FROM CDM

THIS DWG PREPARED FROM COMPUTER INPUT (LOADS & DIMENSIONS) SUBMITTED BY TRUSS MFR.

Top chord 2x4 SP #2 N
Bot chord 2x4 SP #2 N
Webs 2x4 SP #2 N

Wind reactions based on MWFRS pressures.

Deflection meets L/240 live and L/180 total load.

* TOE NAILING ALLOWED BASED ON AVERAGE REACTION

110 mph wind, 15.00 ft mean hgt, ASCE 7-02, CLOSED bldg, Located anywhere in roof, CAT II, EXP B, wind TC DL=5.0 psf, wind BC DL=5.0 psf. Iw=1.00 GCpi(+/-)=0.18

Hipjack supports 7-0-0 setback jacks with no webs.

The overall height of this truss excluding overhang is 4-5-0.

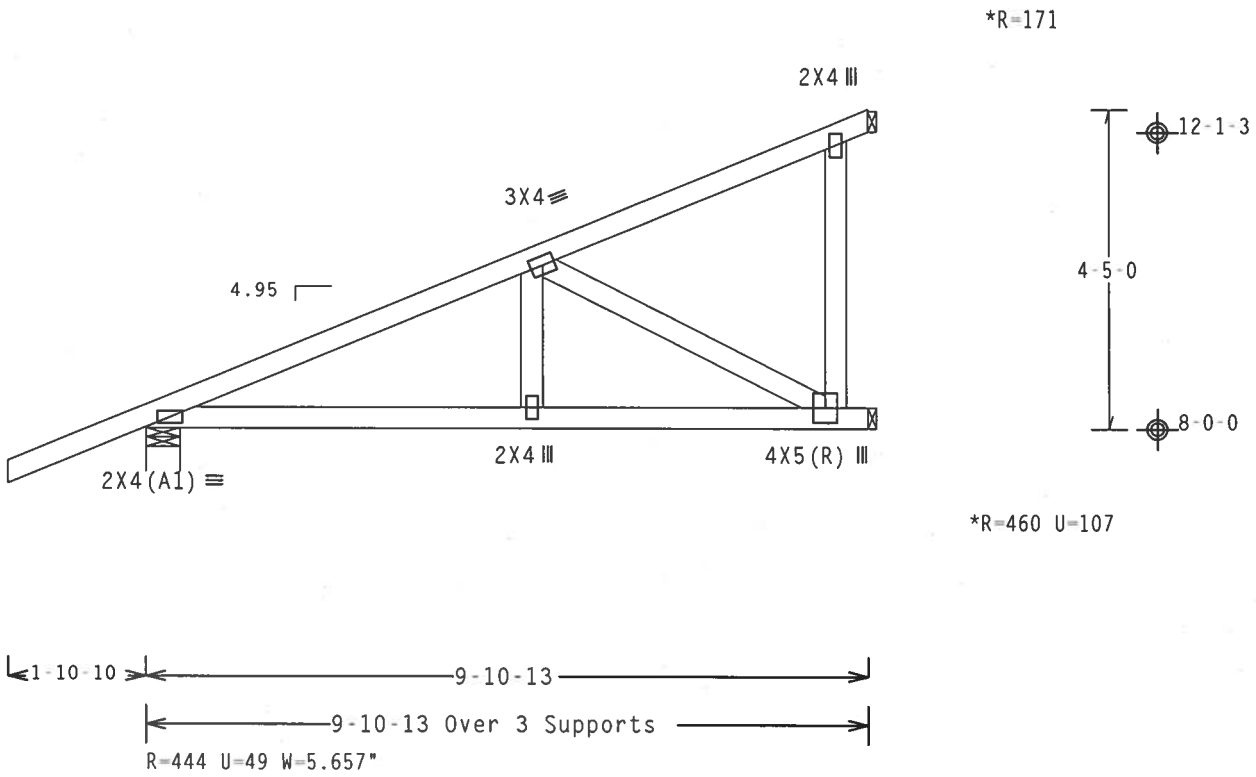

Design Crit: TPI-2002(STD)/FBC
Cq/RT=1.00(1.25)/10(0) 7.36.0424

PLT TYP. Wave

QTY:1 FL/-/5/-/-/R/-

Scale =.375"/Ft.

ALPINE
ITW Building Components Group, Inc.

WARNING TRUSSES REQUIRE EXTREME CARE IN FABRICATION, HANDLING, SHIPPING, INSTALLING AND BRACING. REFER TO BCSI (BUILDING COMPONENT SAFETY INFORMATION), PUBLISHED BY TPI (TRUSS PLATE INSTITUTE, 218 NORTH LEE STREET, SUITE 312, ALEXANDRIA, VA. 22314) AND WTCA (WOOD TRUSS COUNCIL OF AMERICA, 6300 ENTERPRISE LANE, MADISON, WI 53719) FOR SAFETY PRACTICES PRIOR TO PERFORMING THESE FUNCTIONS. UNLESS OTHERWISE INDICATED TOP CHORD SHALL HAVE PROPERLY ATTACHED STRUCTURAL PANELS AND BOTTOM CHORD SHALL HAVE A PROPERLY ATTACHED RIGID CEILING.

IMPORTANTFURNISH A COPY OF THIS DESIGN TO THE INSTALLATION CONTRACTOR. ITW BCG, INC. SHALL NOT BE RESPONSIBLE FOR ANY DEVIATION FROM THIS DESIGN; ANY FAILURE TO BUILD THE TRUSS IN CONFORMANCE WITH TPI; OR FABRICATING, HANDLING, SHIPPING, INSTALLING & BRACING OF TRUSSES.
DESIGN CONFORMS WITH APPLICABLE PROVISIONS OF NDS (NATIONAL DESIGN SPEC, BY AF&PA) AND TPI. ITW BCG CONNECTOR PLATES ARE MADE OF 20/18/16GA (W,H/SS/K) ASTM A653 GRADE 40/60 (W, K/H,SS) GALV. STEEL. APPLY PLATES TO EACH FACE OF TRUSS AND, UNLESS OTHERWISE LOCATED ON THIS DESIGN, POSITION PER DRAWINGS 160A-Z. ANY INSPECTION OF PLATES FOLLOWED BY (i) SHALL BE PER ANNEX A3 OF TPI1-2002 SEC.3. A SEAL ON THIS DRAWING INDICATES ACCEPTANCE OF PROFESSIONAL ENGINEERING RESPONSIBILITY SOLELY FOR THE TRUSS COMPONENT DESIGN SHOWN. THE SUITABILITY AND USE OF THIS COMPONENT FOR ANY BUILDING IS THE RESPONSIBILITY OF THE

JAMES F. COLLINS, JR. LICENSE No. 52212 STATE OF FLORIDA PROFESSIONAL ENGINEER

TC LL	20.0 PSF	REF R215-- 72044
TC DL	10.0 PSF	DATE 06/25/07
BC DL	10.0 PSF	DRW HCUSR215 07176012
BC LL	0.0 PSF	HC-ENG DAB/WHK
TOT.LD.	40.0 PSF	SEQN- 181500
DUR.FAC.	1.25	FROM CDM

THIS DWG PREPARED FROM COMPUTER INPUT (LOADS & DIMENSIONS) SUBMITTED BY TRUSS MFR.

Top chord 2x4 SP #2 N
Bot chord 2x4 SP #2 N
Webs 2x4 SP #2 N

Wind reactions based on MWFRS pressures.

Deflection meets L/240 live and L/180 total load.

110 mph wind, 15.00 ft mean hgt, ASCE 7-02, CLOSED bldg, Located anywhere in roof, CAT II, EXP B, wind TC DL=5.0 psf, wind BC DL=5.0 psf. Iw=1.00 GCpi(+/-)=0.18

Hipjack supports 7-0-0 setback jacks with no webs.

The overall height of this truss excluding overhang is 4-5-0.

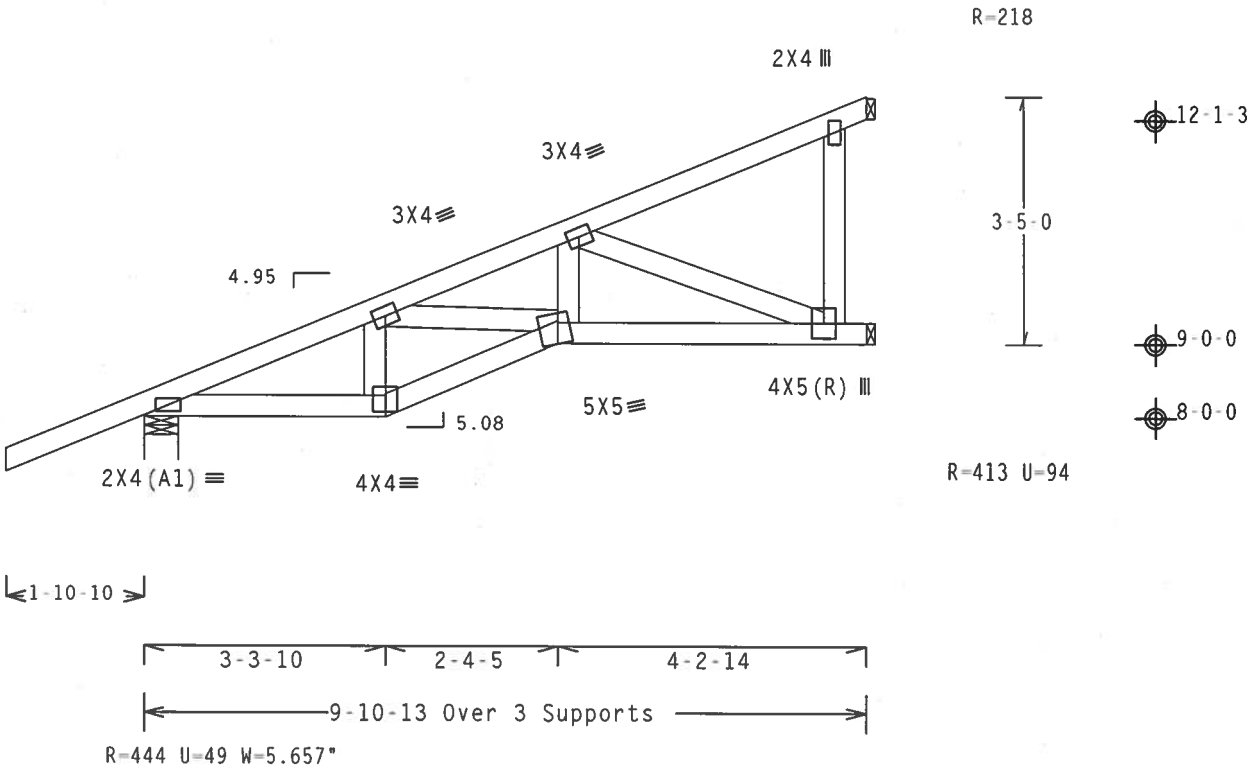

Design Crit: TPI-2002(STD)/FBC
Cq/RT=1.00(1.25)/10(0) 7.36.0424

PLT TYP. Wave QTY:1 FL/-/5/-/-/R/- Scale =.375"/Ft.

ALPINE
ITW Building Components Group, Inc.

WARNING TRUSSES REQUIRE EXTREME CARE IN FABRICATION, HANDLING, SHIPPING, INSTALLING AND BRACING. REFER TO BCSI (BUILDING COMPONENT SAFETY INFORMATION), PUBLISHED BY TPI (TRUSS PLATE INSTITUTE, 218 NORTH LEE STREET, SUITE 312, ALEXANDRIA, VA, 22314) AND WTCA (WOOD TRUSS COUNCIL OF AMERICA, 6300 ENTERPRISE LANE, MADISON, WI 53719) FOR SAFETY PRACTICES PRIOR TO PERFORMING THESE FUNCTIONS. UNLESS OTHERWISE INDICATED TOP CHORD SHALL HAVE PROPERLY ATTACHED STRUCTURAL PANELS AND BOTTOM CHORD SHALL HAVE A PROPERLY ATTACHED RIGID CEILING.

IMPORTANTFURNISH A COPY OF THIS DESIGN TO THE INSTALLATION CONTRACTOR. ITW BCG, INC. SHALL NOT BE RESPONSIBLE FOR ANY DEVIATION FROM THIS DESIGN; ANY FAILURE TO BUILD THE TRUSS IN COMFORMANCE WITH TPI; OR FABRICATING, HANDLING, SHIPPING, INSTALLING & BRACING OF TRUSSES.
DESIGN CONFORMS WITH APPLICABLE PROVISIONS OF NDS (NATIONAL DESIGN SPEC, BY AF&PA) AND TPI. ITW BCG CONNECTOR PLATES ARE MADE OF 20/18/16GA (W.H/SS/K) ASTM A653 GRADE 40/60 (W, K/H,SS) GALV. STEEL. APPLY PLATES TO EACH FACE OF TRUSS AND, UNLESS OTHERWISE LOCATED ON THIS DESIGN, POSITION PER DRAWINGS 160A-Z. ANY INSPECTION OF PLATES FOLLOWED BY (I) SHALL BE PER ANNEX A3 OF TPI1-2002 SEC.3. A SEAL ON THIS DRAWING INDICATES ACCEPTANCE OF PROFESSIONAL ENGINEERING RESPONSIBILITY SOLELY FOR THE TRUSS COMPONENT DESIGN SHOWN. THE SUITABILITY AND USE OF THIS COMPONENT FOR ANY BUILDING IS THE RESPONSIBILITY OF THE

JAMES F. COLLINS, JR. LICENSE No. 52212 STATE OF FLORIDA PROFESSIONAL ENGINEER

TC LL	20.0 PSF	REF R215-- 72045
TC DL	10.0 PSF	DATE 06/25/07
BC DL	10.0 PSF	DRW HCUSR215 07176040
BC LL	0.0 PSF	HC-ENG DAB/WHK
TOT.LD.	40.0 PSF	SEQN- 181507
DUR.FAC.	1.25	FROM CDM

THIS DWG PREPARED FROM COMPUTER INPUT (LOADS & DIMENSIONS) SUBMITTED BY TRUSS MFR.

Top chord 2x4 SP #2 N
Bot chord 2x4 SP #2 N
Webs 2x4 SP #2 N

Deflection meets L/240 live and L/180 total load.

REFER TO PIGBACKA0405 OR PIGBACKB0405 FOR PIGYBACK DETAILS. TOP CHORD OF SUPPORTING TRUSS UNDER PIGGYBACK TO BE BRACED @ 24" O.C. UNLESS OTHERWISE SPECIFIED.

110 mph wind, 18.92 ft mean hgt, ASCE 7-02, CLOSED bldg, Located anywhere in roof, CAT II, EXP B, wind TC DL=5.0 psf, wind BC DL=5.0 psf. Iw=1.00 GCpi(+/-)=0.18

Wind reactions based on MWFRS pressures.

In lieu of rigid ceiling use purlins to brace BC @ 24" OC.

The overall height of this truss excluding overhang is 1-3-14.

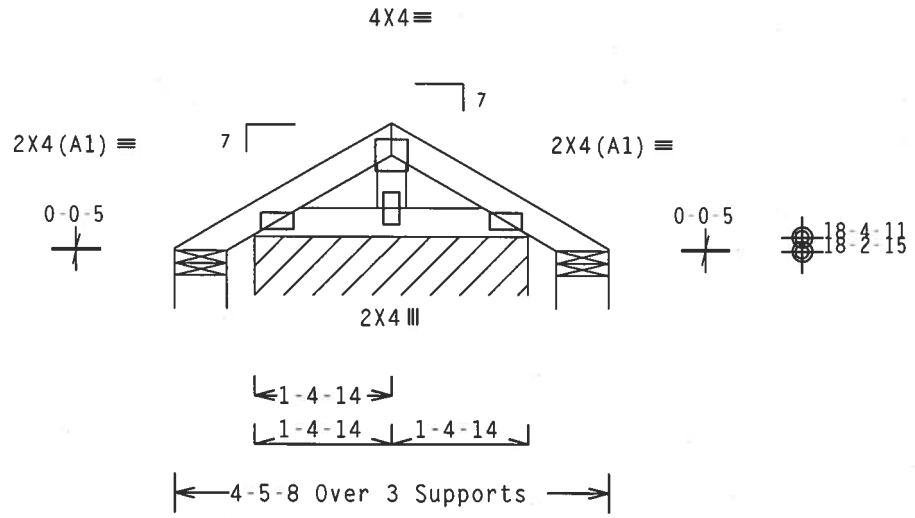

R=81 PLF U=15 PLF W=2-9-11

R=18 U=11 W=6.45"

R=18 U=9 W=6.45"

Design Crit: TPI-2002(STD)/FBC
Cq/RT=1.00(1.25)/10(0) 7.36.0424.13

PLT TYP. Wave

QTY:1 FL/-/5/-/-/R/- Scale =.5"/Ft.

ALPINE
ITW Building Components Group, Inc.

WARNING TRUSSES REQUIRE EXTREME CARE IN FABRICATION, HANDLING, SHIPPING, INSTALLING AND BRACING. REFER TO BCSI (BUILDING COMPONENT SAFETY INFORMATION), PUBLISHED BY TPI (TRUSS PLATE INSTITUTE, 218 NORTH LEE STREET, SUITE 312, ALEXANDRIA, VA. 22314) AND WTCA (WOOD TRUSS COUNCIL OF AMERICA, 6300 ENTERPRISE LANE, MADISON, WI 53719) FOR SAFETY PRACTICES PRIOR TO PERFORMING THESE FUNCTIONS. UNLESS OTHERWISE INDICATED TOP CHORD SHALL HAVE PROPERLY ATTACHED STRUCTURAL PANELS AND BOTTOM CHORD SHALL HAVE A PROPERLY ATTACHED RIGID CEILING.

IMPORTANTFURNISH A COPY OF THIS DESIGN TO THE INSTALLATION CONTRACTOR. ITW BCG, INC. SHALL NOT BE RESPONSIBLE FOR ANY DEVIATION FROM THIS DESIGN; ANY FAILURE TO BUILD THE TRUSS IN COMFORMANCE WITH TPI; OR FABRICATING, HANDLING, SHIPPING, INSTALLING & BRACING OF TRUSSES.
DESIGN CONFORMS WITH APPLICABLE PROVISIONS OF NDS (NATIONAL DESIGN SPEC. BY AF&PA) AND TPI. ITW BCG CONNECTOR PLATES ARE MADE OF 20/18/16GA (W.H/SS/K) ASTM A653 GRADE 40/60 (W. K/H.SS) GALV. STEEL. APPLY PLATES TO EACH FACE OF TRUSS AND, UNLESS OTHERWISE LOCATED ON THIS DESIGN, POSITION PER DRAWINGS 160A-Z. ANY INSPECTION OF PLATES FOLLOWED BY (I) SHALL BE PER ANNEX A3 OF TPI1-2002 SEC.3. A SEAL ON THIS DRAWING INDICATES ACCEPTANCE OF PROFESSIONAL ENGINEERING RESPONSIBILITY SOLELY FOR THE TRUSS COMPONENT DESIGN SHOWN. THE SUITABILITY AND USE OF THIS COMPONENT FOR ANY BUILDING IS THE RESPONSIBILITY OF THE

JAMES F. COLLINS JR. LICENSE No. 52212 STATE OF FLORIDA PROFESSIONAL ENGINEER

TC LL	20.0 PSF	REF R215-- 72046
TC DL	10.0 PSF	DATE 06/25/07
BC DL	10.0 PSF	DRW HCUSR215 07176047
BC LL	0.0 PSF	HC-ENG DAB/WHK
TOT.LD.	40.0 PSF	SEQN- 181734
DUR.FAC.	1.25	FROM CDM

THIS DWG PREPARED FROM COMPUTER INPUT (LOADS & DIMENSIONS) SUBMITTED BY TRUSS MFR.

Top chord 2x4 SP #2 N
Bot chord 2x4 SP #2 N
Webs 2x4 SP #2 N

Wind reactions based on MWFRS pressures.

REFER TO PIGBACKA0405 OR PIGBACKB0405 FOR PIGYBACK DETAILS.
TOP CHORD OF SUPPORTING TRUSS UNDER PIGGYBACK TO BE BRACED @ 24" O.C. UNLESS OTHERWISE SPECIFIED.

110 mph wind, 18.85 ft mean hgt, ASCE 7-02, CLOSED bldg, not located within 4.50 ft from roof edge, CAT II, EXP B, wind TC DL=5.0 psf, wind BC DL=2.0 psf. Iw=1.00 GCpi(+/-)=0.18

In lieu of structural panels or rigid ceiling use purlins to brace all flat TC @ 24" OC, all BC @ 24" OC.

Deflection meets L/240 live and L/180 total load.

The overall height of this truss excluding overhang is 1-2-6.

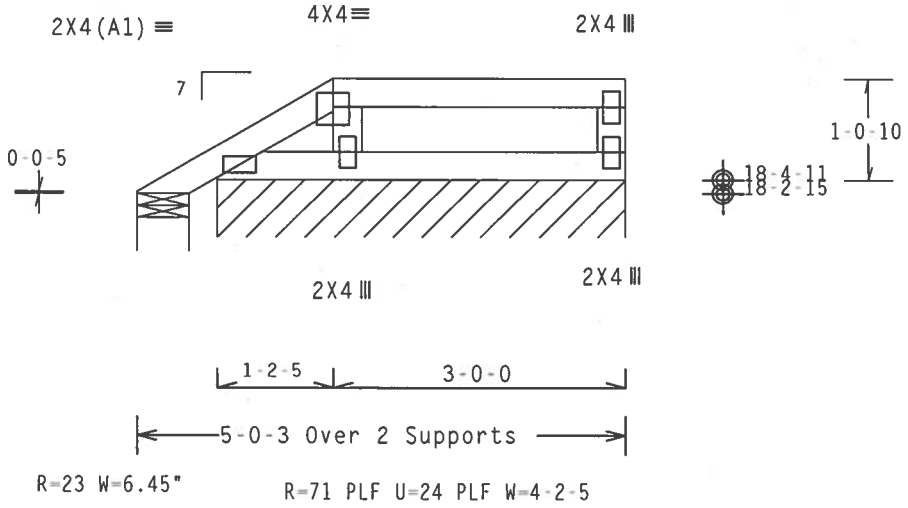

Design Crit: TPI-2002(STD)/FBC
Cq/RT=1.00(1.25)/10(0) 7.36.0424.12

PLT TYP. Wave QTY:1 FL/-/5/-/-/R/- Scale =.5"/Ft.

ALPINE
ITW Building Components Group, Inc.

WARNING TRUSSES REQUIRE EXTREME CARE IN FABRICATION, HANDLING, SHIPPING, INSTALLING AND BRACING. REFER TO BCSI (BUILDING COMPONENT SAFETY INFORMATION), PUBLISHED BY TPI (TRUSS PLATE INSTITUTE, 218 NORTH LEE STREET, SUITE 312, ALEXANDRIA, VA. 22314) AND WTCA (WOOD TRUSS COUNCIL OF AMERICA, 6300 ENTERPRISE LANE, MADISON, WI 53719) FOR SAFETY PRACTICES PRIOR TO PERFORMING THESE FUNCTIONS. UNLESS OTHERWISE INDICATED TOP CHORD SHALL HAVE PROPERLY ATTACHED STRUCTURAL PANELS AND BOTTOM CHORD SHALL HAVE A PROPERLY ATTACHED RIGID CEILING.

IMPORTANTFURNISH A COPY OF THIS DESIGN TO THE INSTALLATION CONTRACTOR. ITW BCG, INC. SHALL NOT BE RESPONSIBLE FOR ANY DEVIATION FROM THIS DESIGN; ANY FAILURE TO BUILD THE TRUSS IN COMFORMANCE WITH TPI; OR FABRICATING, HANDLING, SHIPPING, INSTALLING & BRACING OF TRUSSES.
DESIGN CONFORMS WITH APPLICABLE PROVISIONS OF NDS (NATIONAL DESIGN SPEC. BY AF&PA) AND TPI. ITW BCG CONNECTOR PLATES ARE MADE OF 20/18/16GA (W,H/SS/K) ASTM A653 GRADE 40/60 (W, K/H,SS) GALV. STEEL. APPLY PLATES TO EACH FACE OF TRUSS AND, UNLESS OTHERWISE LOCATED ON THIS DESIGN, POSITION PER DRAWINGS 160A-Z. ANY INSPECTION OF PLATES FOLLOWED BY (1) SHALL BE PER ANNEX A3 OF TPI1-2002 SEC.3. A SEAL ON THIS DRAWING INDICATES ACCEPTANCE OF PROFESSIONAL ENGINEERING RESPONSIBILITY SOLELY FOR THE TRUSS COMPONENT DESIGN SHOWN. THE SUITABILITY AND USE OF THIS COMPONENT FOR ANY BUILDING IS THE RESPONSIBILITY OF THE

JAMES F. COLLINS LICENSE No. 52212 STATE OF FLORIDA PROFESSIONAL ENGINEER

TC LL	20.0 PSF	REF R215-- 72047
TC DL	10.0 PSF	DATE 06/25/07
BC DL	10.0 PSF	DRW HCUSR215 07176010
BC LL	0.0 PSF	HC-ENG DAB/WHK
TOT.LD.	40.0 PSF	SEQN- 181730
DUR.FAC.	1.25	FROM CDM

BEARING BLOCK NAIL SPACING DETAIL

MINIMUM SPACING FOR SINGLE BEARING BLOCK IS SHOWN. DOUBLE NAIL SPACINGS AND STAGGER NAILING FOR TWO BLOCKS. GREATER SPACING MAY BE REQUIRED TO AVOID SPLITTING.

A – EDGE DISTANCE AND SPACING BETWEEN STAGGERED ROWS OF NAILS (6 NAIL DIAMETERS)
B – SPACING OF NAILS IN A ROW (12 NAIL DIAMETERS)
C – END DISTANCE (15 NAIL DIAMETERS)

IF NAIL HOLES ARE PREBORED, SOME SPACING MAY BE REDUCED BY THE AMOUNTS GIVEN BELOW:
- • SPACING MAY BE REDUCED BY 50%
- •• SPACING MAY BE REDUCED BY 33%

BEARING BLOCK TO BE SAME SIZE AND SPECIES AS BOTTOM CHORD. BLOCKS MAY BE ANY GRADE WITHIN THE SPECIES, PROVIDED THE COMPRESSION PERPENDICULAR TO GRAIN VALUE (Fc-perp) IS AT LEAST THAT OF THE CHORD.

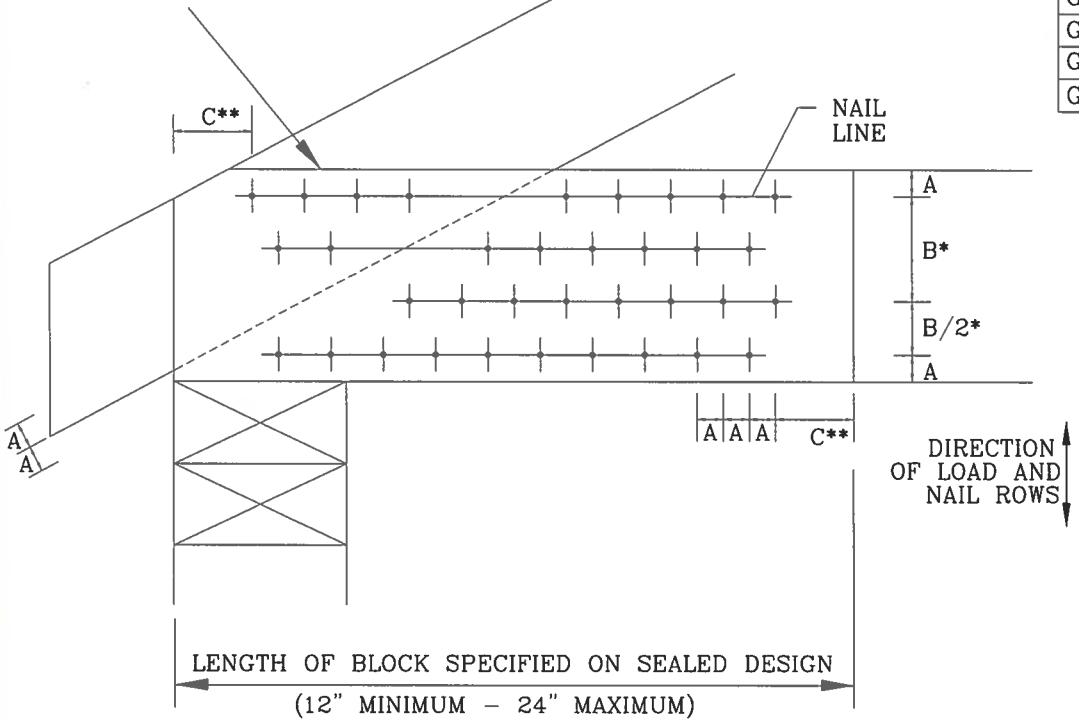

MAXIMUM NUMBER OF NAIL LINES PARALLEL TO GRAIN

NAIL TYPE	CHORD SIZE 2X4	2X6	2X8	2X10	2X12
8d BOX (0.113"X 2.5",MIN)	3	6	9	12	15
10d BOX (0.128"X 3.",MIN)	3	5	7	10	12
12d BOX (0.128"X 3.25",MIN)	3	5	7	10	12
16d BOX (0.135"X 3.5",MIN)	3	5	7	10	12
20d BOX (0.148"X 4.",MIN)	2	4	5	6	8
8d COMMON (0.131"X 2.5",MIN)	3	5	7	10	12
10d COMMON (0.148"X 3.",MIN)	2	4	6	8	10
12d COMMON (0.148"X 3.25",MIN)	2	4	6	8	10
16d COMMON (0.162"X 3.5",MIN)	2	4	6	8	10
GUN (0.120"X 2.5",MIN)	3	6	8	11	14
GUN (0.131"X 2.5",MIN)	3	5	7	10	12
GUN (0.120"X 3.",MIN)	3	6	8	11	14
GUN (0.131"X 3.",MIN)	3	5	7	10	12

MINIMUM NAIL SPACING DISTANCES

NAIL TYPE	DISTANCES A	B*	C**
8d BOX (0.113"X 2.5",MIN)	3/4"	1 3/8"	1 3/4"
10d BOX (0.128"X 3.",MIN)	7/8"	1 5/8"	2"
12d BOX (0.128"X 3.25",MIN)	7/8"	1 5/8"	2"
16d BOX (0.135"X 3.5",MIN)	7/8"	1 5/8"	2 1/8"
20d BOX (0.148"X 4.",MIN)	1"	1 7/8"	2 1/4"
8d COMMON (0.131"X 2.5",MIN)	7/8"	1 5/8"	2"
10d COMMON (0.148"X 3.",MIN)	1"	1 7/8"	2 1/4"
12d COMMON (0.148"X 3.25",MIN)	1"	1 7/8"	2 1/4"
16d COMMON (0.162"X 3.5",MIN)	1'	2"	2 1/2"
GUN (0.120"X 2.5",MIN)	3/4"	1 1/2"	1 7/8"
GUN (0.131"X 2.5",MIN)	7/8"	1 5/8"	2"
GUN (0.120"X 3.",MIN)	3/4"	1 1/2"	1 7/8"
GUN (0.131"X 3.",MIN)	7/8"	1 5/8"	2"

THIS DRAWING REPLACES DRAWING B139 AND CNBRGBLK0699

ALPINE
ITW BUILDING COMPONENTS GROUP, INC.
POMPANO BEACH, FLORIDA

WARNING TRUSSES REQUIRE EXTREME CARE IN FABRICATING, HANDLING, SHIPPING, INSTALLING AND BRACING. REFER TO BCSI (BUILDING COMPONENT SAFETY INFORMATION), PUBLISHED BY TPI (TRUSS PLATE INSTITUTE, 218 NORTH LEE STR., SUITE 312 ALEXANDRIA, VA. 22314) AND WTCA (WOOD TRUSS COUNCIL OF AMERICA, 6300 ENTERPRISE LN, MADISON, WI 53719) FOR SAFETY PRACTICES PRIOR TO PERFORMING THESE FUNCTIONS. UNLESS OTHERWISE INDICATED, TOP CHORD SHALL HAVE PROPERLY ATTACHED STRUCTURAL PANELS AND BOTTOM CHORD SHALL HAVE A PROPERLY ATTACHED RIGID CEILING.

IMPORTANT FURNISH COPY OF THIS DESIGN TO INSTALLATION CONTRACTOR. ITW BCG, INC., SHALL NOT BE RESPONSIBLE FOR ANY DEVIATION FROM THIS DESIGN; ANY FAILURE TO BUILD THE TRUSS IN CONFORMANCE WITH TPI; OR FABRICATING, HANDLING, SHIPPING, INSTALLING & BRACING OF TRUSSES. DESIGN CONFORMS WITH APPLICABLE PROVISIONS OF NDS (NATIONAL DESIGN SPEC, BY AF&PA) AND TPI. ITW, BCG CONNECTOR PLATES ARE MADE OF 20/18/16GA (W,H/SS/K) ASTM A653 GRADE 40/60 (W,K/LSS) GALV. STEEL. APPLY PLATES TO EACH FACE OF TRUSS AND, UNLESS OTHERWISE LOCATED ON THIS DESIGN, POSITION PER DRAWINGS 160A-Z. ANY INSPECTION OF PLATES FOLLOWED BY (I) SHALL BE PER ANNEX A3 OF TPI 1-2002 SEC. 3. A SEAL ON THIS DRAWING INDICATES ACCEPTANCE OF PROFESSIONAL ENGINEERING RESPONSIBILITY SOLELY FOR THE TRUSS COMPONENT DESIGN SHOWN. THE SUITABILITY AND USE OF THIS COMPONENT FOR ANY BUILDING IS THE RESPONSIBILITY OF THE BUILDING DESIGNER, PER ANSI/TPI 1 SEC. 2.

JAMES F. COLLINS, JR. LICENSE No. 52212 STATE OF FLORIDA PROFESSIONAL ENGINEER

REF	BEARING BLOCK
DATE	2/23/07
DRWG	CNBRGBLK0207
-ENG	SJP/KAR

CLB WEB BRACE SUBSTITUTION

THIS DETAIL IS TO BE USED WHEN CONTINUOUS LATERAL BRACING (CLB) IS SPECIFIED ON AN ALPINE TRUSS DESIGN BUT AN ALTERNATIVE WEB BRACING METHOD IS DESIRED.

NOTES:

THIS DETAIL IS ONLY APPLICABLE FOR CHANGING THE SPECIFIED CLB SHOWN ON SINGLE PLY SEALED DESIGNS TO T-BRACING OR SCAB BRACING.

ALTERNATIVE BRACING SPECIFIED IN CHART BELOW MAY BE CONSERVATIVE. FOR MINIMUM ALTERNATIVE BRACING, RE-RUN DESIGN WITH APPROPRIATE BRACING.

WEB MEMBER SIZE	SPECIFIED CLB BRACING	ALTERNATIVE BRACING T OR L-BRACE	ALTERNATIVE BRACING SCAB BRACE
2X3 OR 2X4	1 ROW	2X4	1-2X4
2X3 OR 2X4	2 ROWS	2X6	2-2X4
2X6	1 ROW	2X4	1-2X6
2X6	2 ROWS	2X6	2-2X4(*)
2X8	1 ROW	2X6	1-2X8
2X8	2 ROWS	2X6	2-2X6(*)

T-BRACE, L-BRACE AND SCAB BRACE TO BE SAME SPECIES AND GRADE OR BETTER THAN WEB MEMBER UNLESS SPECIFIED OTHERWISE ON ENGINEER'S SEALED DESIGN.

(*) CENTER SCAB ON WIDE FACE OF WEB. APPLY (1) SCAB TO EACH FACE OF WEB.

T-BRACING OR L-BRACING:

APPLY TO EITHER SIDE OF WEB NARROW FACE.
ATTACH WITH 10d BOX OR GUN (0.128"x 3.",MIN) NAILS.
AT 6" O.C. BRACE IS A MINIMUM 80% OF WEB MEMBER LENGTH

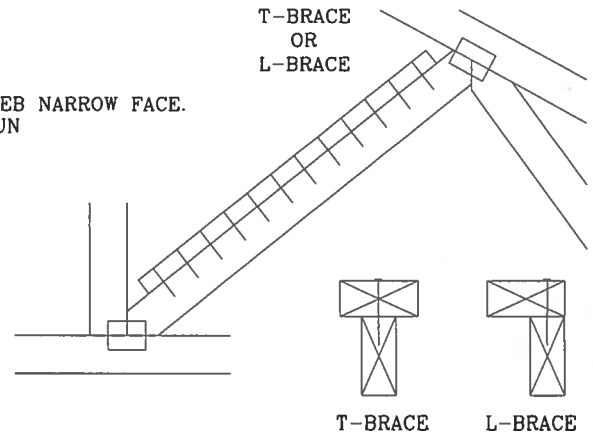

SCAB BRACING:

APPLY SCAB(S) TO WIDE FACE OF WEB.
NO MORE THAN (1) SCAB PER FACE.
ATTACH WITH 10d BOX OR GUN (0.128"x 3.",MIN) NAILS.
AT 6" O.C. BRACE IS A MINIMUM 80% OF WEB MEMBER LENGTH

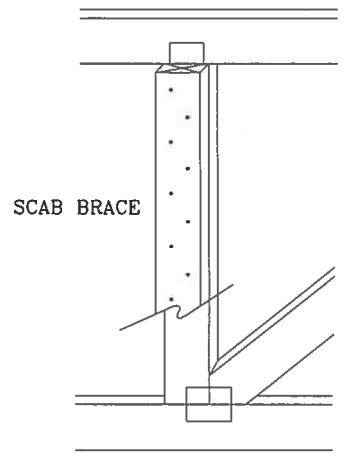

THIS DRAWING REPLACES DRAWING 579,640

ALPINE
ITW BUILDING COMPONENTS GROUP, INC.
POMPANO BEACH, FLORIDA

WARNING TRUSSES REQUIRE EXTREME CARE IN FABRICATING, HANDLING, SHIPPING, INSTALLING AND BRACING. REFER TO BCSI (BUILDING COMPONENT SAFETY INFORMATION), PUBLISHED BY TPI (TRUSS PLATE INSTITUTE, 218 NORTH LEE STR., SUITE 312, ALEXANDRIA, VA. 22314) AND WTCA (WOOD TRUSS COUNCIL OF AMERICA, 6300 ENTERPRISE LN, MADISON, WI 53719) FOR SAFETY PRACTICES PRIOR TO PERFORMING THESE FUNCTIONS. UNLESS OTHERWISE INDICATED, TOP CHORD SHALL HAVE PROPERLY ATTACHED STRUCTURAL PANELS AND BOTTOM CHORD SHALL HAVE A PROPERLY ATTACHED RIGID CEILING.

IMPORTANT FURNISH COPY OF THIS DESIGN TO INSTALLATION CONTRACTOR. ITW BCG, INC., SHALL NOT BE RESPONSIBLE FOR ANY DEVIATION FROM THIS DESIGN; ANY FAILURE TO BUILD THE TRUSS IN CONFORMANCE WITH TPI; OR FABRICATING, HANDLING, SHIPPING, INSTALLING & BRACING OF TRUSSES. DESIGN CONFORMS WITH APPLICABLE PROVISIONS OF NDS (NATIONAL DESIGN SPEC. BY AF&PA) AND TPI. ITW, BCG CONNECTOR PLATES ARE MADE OF 20/18/16GA (W,H/SS/K) ASTM A653 GRADE 40/60 (W,K/H,SS) GALV. STEEL. APPLY PLATES TO EACH FACE OF TRUSS AND, UNLESS OTHERWISE LOCATED ON THIS DESIGN, POSITION PER DRAWINGS 160A-Z. ANY INSPECTION OF PLATES FOLLOWED BY (I) SHALL BE PER ANNEX A3 OF TPI 1-2002 SEC. 3. A SEAL ON THIS DRAWING INDICATES ACCEPTANCE OF PROFESSIONAL ENGINEERING RESPONSIBILITY SOLELY FOR THE TRUSS COMPONENT DESIGN SHOWN. THE SUITABILITY AND USE OF THIS COMPONENT FOR ANY BUILDING IS THE RESPONSIBILITY OF THE BUILDING DESIGNER, PER ANSI/TPI 1 SEC. 2.

JAMES F. COLLINS, JR. LICENSE No. 52212 STATE OF FLORIDA PROFESSIONAL ENGINEER

TC LL	PSF	REF CLB SUBST.
TC DL	PSF	DATE 2/23/07
BC DL	PSF	DRWG BRCLBSUB0207
BC LL	PSF	-ENG MLH/KAR
TOT. LD.	PSF	
DUR. FAC.		
SPACING		

ASCE 7-02: 110 MPH WIND SPEED, 15' MEAN HEIGHT, ENCLOSED, I = 1.00, EXPOSURE C

MAX GABLE VERTICAL LENGTH

2X4 GABLE VERTICAL SPACING	SPECIES	BRACE GRADE	NO BRACES	(1) 1X4 "L" BRACE * GROUP A	(1) 1X4 "L" BRACE * GROUP B	(1) 2X4 "L" BRACE * GROUP A	(1) 2X4 "L" BRACE * GROUP B	(2) 2X4 "L" BRACE ** GROUP A	(2) 2X4 "L" BRACE ** GROUP B	(1) 2X6 "L" BRACE * GROUP A	(1) 2X6 "L" BRACE * GROUP B	(2) 2X6 "L" BRACE ** GROUP A	(2) 2X6 "L" BRACE ** GROUP B
24" O.C.	SPF HF	#1 / #2	3' 10"	6' 8"	6' 10"	7' 11"	8' 1"	9' 5"	9' 8"	12' 5"	12' 9"	14' 0"	14' 0"
		#3	3' 9"	6' 0"	6' 0"	7' 11"	7' 11"	9' 5"	9' 5"	12' 4"	12' 4"	14' 0"	14' 0"
		STUD	3' 9"	6' 0"	6' 0"	7' 11"	7' 11"	9' 5"	9' 5"	12' 3"	12' 3"	14' 0"	14' 0"
		STANDARD	3' 9"	5' 2"	5' 2"	6' 9"	6' 9"	9' 1"	9' 1"	10' 7"	10' 7"	14' 0"	14' 0"
	SP DFL	#1	4' 3"	6' 8"	7' 2"	7' 11"	8' 6"	9' 5"	10' 2"	12' 5"	13' 5"	14' 0"	14' 0"
		#2	4' 2"	6' 8"	7' 2"	7' 11"	8' 6"	9' 5"	10' 2"	12' 5"	13' 5"	14' 0"	14' 0"
		#3	4' 0"	6' 2"	6' 2"	7' 11"	8' 1"	9' 5"	9' 11"	12' 5"	12' 8"	14' 0"	14' 0"
		STUD	4' 0"	6' 1"	6' 1"	7' 11"	8' 0"	9' 5"	9' 11"	12' 5"	12' 6"	14' 0"	14' 0"
		STANDARD	3' 10"	5' 3"	5' 3"	6' 11"	6' 11"	9' 4"	9' 4"	10' 10"	10' 10"	14' 0"	14' 0"
16" O.C.	SPF HF	#1 / #2	4' 5"	7' 8"	7' 10"	9' 1"	9' 4"	10' 10"	11' 1"	14' 0"	14' 0"	14' 0"	14' 0"
		#3	4' 4"	7' 4"	7' 4"	9' 1"	9' 1"	10' 10"	10' 10"	14' 0"	14' 0"	14' 0"	14' 0"
		STUD	4' 4"	7' 4"	7' 4"	9' 1"	9' 1"	10' 10"	10' 10"	14' 0"	14' 0"	14' 0"	14' 0"
		STANDARD	4' 4"	6' 4"	6' 4"	8' 4"	8' 4"	10' 10"	10' 10"	12' 11"	12' 11"	14' 0"	14' 0"
	SP DFL	#1	4' 10"	7' 8"	8' 3"	9' 1"	9' 9"	10' 10"	11' 8"	14' 0"	14' 0"	14' 0"	14' 0"
		#2	4' 9"	7' 8"	8' 3"	9' 1"	9' 9"	10' 10"	11' 8"	14' 0"	14' 0"	14' 0"	14' 0"
		#3	4' 6"	7' 7"	7' 7"	9' 1"	9' 6"	10' 10"	11' 4"	14' 0"	14' 0"	14' 0"	14' 0"
		STUD	4' 6"	7' 6"	7' 6"	9' 1"	9' 6"	10' 10"	11' 4"	14' 0"	14' 0"	14' 0"	14' 0"
		STANDARD	4' 5"	6' 5"	6' 5"	8' 6"	8' 6"	10' 10"	11' 1"	13' 3"	13' 3"	14' 0"	14' 0"
12" O.C.	SPF HF	#1 / #2	4' 11"	8' 5"	8' 8"	10' 0"	10' 3"	11' 11"	12' 3"	14' 0"	14' 0"	14' 0"	14' 0"
		#3	4' 9"	8' 5"	8' 5"	10' 0"	10' 0"	11' 11"	11' 11"	14' 0"	14' 0"	14' 0"	14' 0"
		STUD	4' 9"	8' 5"	8' 5"	10' 0"	10' 0"	11' 11"	11' 11"	14' 0"	14' 0"	14' 0"	14' 0"
		STANDARD	4' 9"	7' 3"	7' 3"	9' 7"	9' 7"	11' 11"	11' 11"	14' 0"	14' 0"	14' 0"	14' 0"
	SP DFL	#1	5' 4"	8' 5"	9' 1"	10' 0"	10' 9"	11' 11"	12' 10"	14' 0"	14' 0"	14' 0"	14' 0"
		#2	5' 3"	8' 5"	9' 1"	10' 0"	10' 9"	11' 11"	12' 10"	14' 0"	14' 0"	14' 0"	14' 0"
		#3	5' 0"	8' 5"	8' 5"	10' 0"	10' 6"	11' 11"	12' 6"	14' 0"	14' 0"	14' 0"	14' 0"
		STUD	5' 0"	8' 5"	8' 7"	10' 0"	10' 6"	11' 11"	12' 6"	14' 0"	14' 0"	14' 0"	14' 0"
		STANDARD	4' 11"	7' 5"	7' 5"	9' 10"	9' 10"	11' 11"	12' 3"	14' 0"	14' 0"	14' 0"	14' 0"

BRACING GROUP SPECIES AND GRADES:

GROUP A:

SPRUCE-PINE-FIR: #1 / #2 STANDARD; #3 STUD

HEM-FIR: #2 STUD; #3 STANDARD

DOUGLAS FIR-LARCH: #3; STUD; STANDARD

SOUTHERN PINE: #3; STUD; STANDARD

GROUP B:

HEM-FIR: #1 & BTR; #1

SOUTHERN PINE: #1; #2

DOUGLAS FIR-LARCH: #1; #2

GABLE TRUSS DETAIL NOTES:

LIVE LOAD DEFLECTION CRITERIA IS L/240.

PROVIDE UPLIFT CONNECTIONS FOR 80 PLF OVER CONTINUOUS BEARING (5 PSF TC DEAD LOAD).

GABLE END SUPPORTS LOAD FROM 4' 0" OUTLOOKERS WITH 2' 0" OVERHANG, OR 12" PLYWOOD OVERHANG.

ATTACH EACH "L" BRACE WITH 10d NAILS.
* FOR (1) "L" BRACE: SPACE NAILS AT 2" O.C. IN 18" END ZONES AND 4" O.C. BETWEEN ZONES.
** FOR (2) "L" BRACES: SPACE NAILS AT 3" O.C. IN 18" END ZONES AND 6" O.C. BETWEEN ZONES.

"L" BRACING MUST BE A MINIMUM OF 80% OF WEB MEMBER LENGTH.

GABLE VERTICAL PLATE SIZES

VERTICAL LENGTH	NO SPLICE
LESS THAN 4' 0"	1X4 OR 2X3
GREATER THAN 4' 0", BUT LESS THAN 11' 6"	2X4
GREATER THAN 11' 6"	2.5X4

+ REFER TO COMMON TRUSS DESIGN FOR PEAK, SPLICE, AND HEEL PLATES.

DIAGONAL BRACE OPTION: VERTICAL LENGTH MAY BE DOUBLED WHEN DIAGONAL BRACE IS USED. CONNECT DIAGONAL BRACE FOR 600# AT EACH END. MAX WEB TOTAL LENGTH IS 14'.

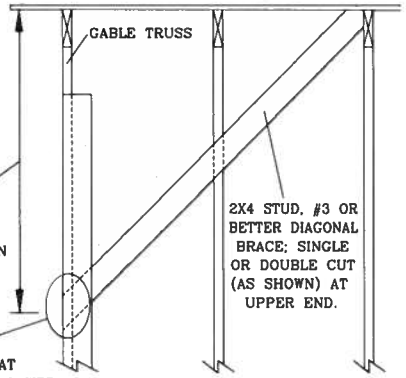

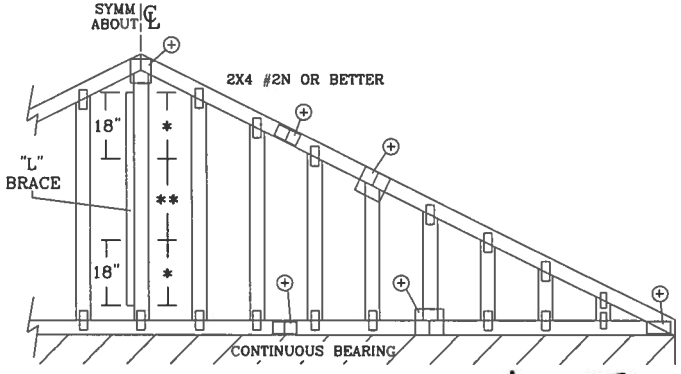

REFER TO CHART ABOVE FOR MAX GABLE VERTICAL LENGTH.

ALPINE

ITW BUILDING COMPONENTS GROUP, INC.
POMPANO BEACH, FLORIDA

WARNING TRUSSES REQUIRE EXTREME CARE IN FABRICATING, HANDLING, SHIPPING, INSTALLING AND BRACING. REFER TO BCSI (BUILDING COMPONENT SAFETY INFORMATION), PUBLISHED BY TPI (TRUSS PLATE INSTITUTE, 218 NORTH LEE STR., SUITE 312, ALEXANDRIA, VA. 22314) AND WTCA (WOOD TRUSS COUNCIL OF AMERICA, 6300 ENTERPRISE LN, MADISON, WI 53719) FOR SAFETY PRACTICES PRIOR TO PERFORMING THESE FUNCTIONS. UNLESS OTHERWISE INDICATED, TOP CHORD SHALL HAVE PROPERLY ATTACHED STRUCTURAL PANELS AND BOTTOM CHORD SHALL HAVE A PROPERLY ATTACHED RIGID CEILING.

IMPORTANT FURNISH COPY OF THIS DESIGN TO INSTALLATION CONTRACTOR. ITW BCG, INC. SHALL NOT BE RESPONSIBLE FOR ANY DEVIATION FROM THIS DESIGN; ANY FAILURE TO BUILD THE TRUSS IN CONFORMANCE WITH TPI; OR FABRICATING, HANDLING, SHIPPING, INSTALLING & BRACING OF TRUSSES DESIGN CONFORMS WITH APPLICABLE PROVISIONS OF NDS (NATIONAL DESIGN SPEC, BY AF&PA) AND TPI. ITW, BCG CONNECTOR PLATES ARE MADE OF 20/18/16GA (W,H/SS/K) ASTM A653 GRADE 40/60 (W,K/H,SS) GALV. STEEL. APPLY PLATES TO EACH FACE OF TRUSS AND, UNLESS OTHERWISE LOCATED ON THIS DESIGN, POSITION PER DRAWINGS 160A-Z. ANY INSPECTION OF PLATES FOLLOWED BY (I) SHALL BE PER ANNEX A3 OF TPI 1-2002 SEC. 3. A SEAL ON THIS DRAWING INDICATES ACCEPTANCE OF PROFESSIONAL ENGINEERING RESPONSIBILITY SOLELY FOR THE TRUSS COMPONENT DESIGN SHOWN. THE SUITABILITY AND USE OF THIS COMPONENT FOR ANY BUILDING IS THE RESPONSIBILITY OF THE BUILDING DESIGNER, PER ANSI/TPI 1 SEC. 2.

JAMES F. COLLINS, JR. LICENSE No. 52212 STATE OF FLORIDA PROFESSIONAL ENGINEER

JUL 25 '07

MAX. TOT. LD. 60 PSF

MAX. SPACING 24.0"

REF	ASCE7-02-GAB11015
DATE	2/23/07
DRWG	A11015EE0207
-ENG	

GABLE DETAIL
FOR LET-IN VERTICALS

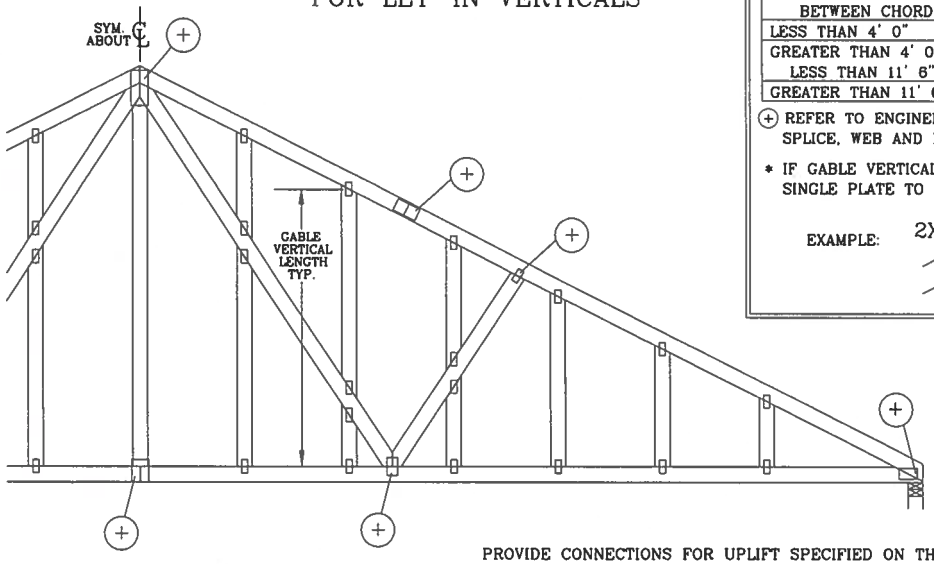

GABLE VERTICAL PLATE SIZES		
VERTICAL LENGTH BETWEEN CHORDS	PLATE SIZE	IF PLATES OVERLAP*
LESS THAN 4' 0"	1X4 OR 2X3	2X8
GREATER THAN 4' 0", BUT LESS THAN 11' 6"	2X4	2X8
GREATER THAN 11' 6"	2.5X4	2.5X8

(+) REFER TO ENGINEERED TRUSS DESIGN FOR PEAK, SPLICE, WEB AND HEEL PLATES.

* IF GABLE VERTICAL PLATES OVERLAP, USE A SINGLE PLATE TO SPAN THE WEB.

EXAMPLE:

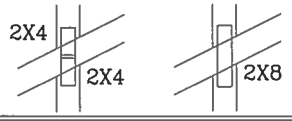

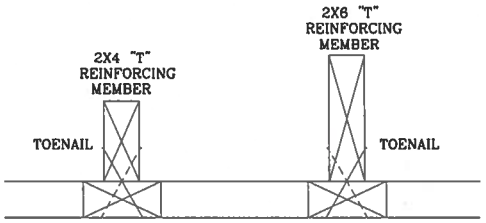

TO CONVERT FROM "L" TO "T" REINFORCING MEMBERS, MULTIPLY "T" FACTOR BY LENGTH (BASED ON GABLE VERTICAL SPECIES, GRADE AND SPACING) FOR (1) 2X4 "L" BRACE, GROUP A, OBTAINED FROM THE APPROPRIATE ALPINE GABLE DETAIL FOR ASCE OR SBCCI WIND LOAD.

MAXIMUM ALLOWABLE "T" REINFORCED GABLE VERTICAL LENGTH IS 14' FROM TOP TO BOTTOM CHORD.

WEB LENGTH INCREASE W/ "T" BRACE

WIND SPEED AND MRH	"T" REINF. MBR. SIZE	SBCCI	ASCE
110 MPH	2x4	10 %	10 %
15 FT	2x6	40 %	50 %
110 MPH	2x4	10 %	10 %
30 FT	2x6	50 %	50 %
100 MPH	2x4	10 %	10 %
15 FT	2x6	30 %	50 %
100 MPH	2x4	10 %	10 %
30 FT	2x6	40 %	40 %
90 MPH	2x4	20 %	10 %
15 FT	2x6	20 %	40 %
90 MPH	2x4	10 %	10 %
30 FT	2x6	30 %	50 %
80 MPH	2x4	10 %	20 %
15 FT	2x6	10 %	30 %
80 MPH	2x4	20 %	10 %
30 FT	2x6	20 %	40 %
70 MPH	2x4	0 %	20 %
15 FT	2x6	0 %	20 %
70 MPH	2x4	10 %	20 %
30 FT	2x6	10 %	30 %

EXAMPLE:
ASCE WIND SPEED = 100 MPH
MEAN ROOF HEIGHT = 30 FT
GABLE VERTICAL = 24" O.C. SP #3
"T" REINFORCING MEMBER SIZE = 2X4
"T" BRACE INCREASE (FROM ABOVE) = 10% = 1.10
(1) 2X4 "L" BRACE LENGTH = 6' 7"
MAXIMUM "T" REINFORCED GABLE VERTICAL LENGTH
1.10 x 6' 7" = 7' 3"

PROVIDE CONNECTIONS FOR UPLIFT SPECIFIED ON THE ENGINEERED TRUSS DESIGN.

ATTACH EACH "T" REINFORCING MEMBER WITH
HAND DRIVEN NAILS:
10d COMMON (0.148"X 3.",MIN) TOENAILS AT 4" O.C. PLUS
(4) 16d COMMON (0.162" X 3.5",MIN) TOENAILS IN TOP AND BOTTOM CHORD.

GUN DRIVEN NAILS:
8d COMMON (0.131"X 2.5",MIN) TOENAILS AT 4" O.C. PLUS
(4) TOENAILS IN TOP AND BOTTOM CHORD.

THIS DETAIL TO BE USED WITH THE APPROPRIATE ALPINE GABLE DETAIL FOR ASCE OR SBCCI WIND LOAD.
ASCE 7-93 GABLE DETAIL DRAWINGS
A11015EN0207, A10015EN0207, A09015EN0207, A08015EN0207, A07015EN0207,
A11030EN0207, A10030EN0207, A09030EN0207, A08030EN0207, A07030EN0207
ASCE 7-98 GABLE DETAIL DRAWINGS
A13015EC0207, A12015EC0207, A11015EC0207, A10015EC0207, A08515EC0207,
A13030EC0207, A12030EC0207, A11030EC0207, A10030EC0207, A08530EC0207
ASCE 7-02 GABLE DETAIL DRAWINGS
A13015EE0207, A12015EE0207, A11015EE0207, A10015EE0207, A08515EE0207,
A13030EE0207, A12030EE0207, A11030EE0207, A10030EE0207, A08530EE0207
ASCE 7-05 GABLE DETAIL DRAWINGS
A13015E50207, A12015E50207, A11015E50207, A10015E50207, A08515E50207,
A13030E50207, A12030E50207, A11030E50207, A10030E50207, A08530E50207

SEE APPROPRIATE ALPINE GABLE DETAIL (ASCE OR SBCCI WIND LOAD) FOR MAXIMUM UNREINFORCED GABLE VERTICAL LENGTH.

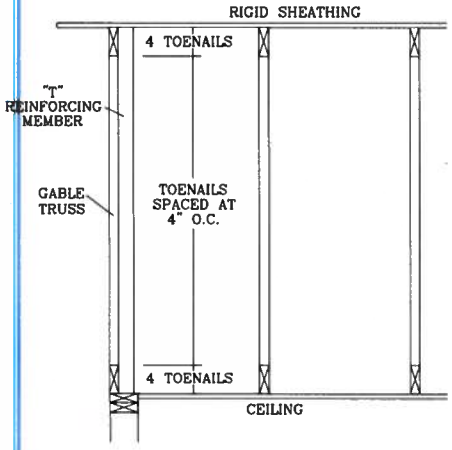

THIS DRAWING REPLACES DRAWINGS GAB98117 876,719 & HC26294035

ALPINE
ITW BUILDING COMPONENTS GROUP, INC.
POMPANO BEACH, FLORIDA

WARNING TRUSSES REQUIRE EXTREME CARE IN FABRICATING, HANDLING, SHIPPING, INSTALLING AND BRACING. REFER TO BCSI (BUILDING COMPONENT SAFETY INFORMATION), PUBLISHED BY TPI (TRUSS PLATE INSTITUTE, 218 NORTH LEE STR., SUITE 312, ALEXANDRIA, VA. 22314) AND WTCA (WOOD TRUSS COUNCIL OF AMERICA, 6300 ENTERPRISE LN, MADISON, WI 53719) FOR SAFETY PRACTICES PRIOR TO PERFORMING THESE FUNCTIONS. UNLESS OTHERWISE INDICATED, TOP CHORD SHALL HAVE PROPERLY ATTACHED STRUCTURAL PANELS AND BOTTOM CHORD SHALL HAVE A PROPERLY ATTACHED RIGID CEILING.

IMPORTANT FURNISH COPY OF THIS DESIGN TO INSTALLATION CONTRACTOR. ITW BCG, INC. SHALL NOT BE RESPONSIBLE FOR ANY DEVIATION FROM THIS DESIGN; ANY FAILURE TO BUILD THE TRUSS IN CONFORMANCE WITH TPI; OR FABRICATING, HANDLING, SHIPPING, INSTALLING & BRACING OF TRUSSES. DESIGN CONFORMS WITH APPLICABLE PROVISIONS OF NDS (NATIONAL DESIGN SPEC, BY AF&PA) AND TPI. ITW, BCG CONNECTOR PLATES ARE MADE OF 20/18/16GA (W,H/SS/K) ASTM A653 GRADE 40/60 (W,K/HSS) GALV. STEEL. APPLY PLATES TO EACH FACE OF TRUSS AND, UNLESS OTHERWISE LOCATED ON THIS DESIGN, POSITION PER DRAWINGS 160A-Z. ANY INSPECTION OF PLATES FOLLOWED BY (I) SHALL BE PER ANNEX A3 OF TPI 1-2002 SEC. 3. A SEAL ON THIS DRAWING INDICATES ACCEPTANCE OF PROFESSIONAL ENGINEERING RESPONSIBILITY SOLELY FOR THE TRUSS COMPONENT DESIGN SHOWN. THE SUITABILITY AND USE OF THIS COMPONENT FOR ANY BUILDING IS THE RESPONSIBILITY OF THE BUILDING DESIGNER, PER ANSI/TPI 1 SEC. 2.

JAMES F. COLLINS JR. LICENSE No. 52212 STATE OF FLORIDA PROFESSIONAL ENGINEER
JAN 2 '07

MAX TOT. LD. 60 PSF
DUR. FAC. ANY
MAX SPACING 24.0"

REF	LET-IN VERT
DATE	2/23/07
DRWG	GBLLETIN0207
-ENG	DLJ/KAR