YOONHWAK KIM
LICENSE
No. 86367
STATE OF
FLORIDA
PROFESSIONAL ENGINEER

This document has been electronically signed and sealed using a Digital Signature. Printed copies without an original signature must be verified using the original electronic version.

ALPINE
AN ITW COMPANY

Alpine, an ITW Company
155 Harlem Ave
North Building, 4th Floor
Glenview, IL 60025
Phone: (800)755-6001
www.alpineitw.com

FL REG# 278, Yoonhwak Kim, FL PE #86367
Florida Certificate of Product Approval #FL 1099

09/28/2022

Columbia County Building Department
Reviewed for
File Copy
Code Compliance
Plans Examiner

| Site Information: | Page 1: |
|---|---|
| *Customer:* W. B. Howland Company, Inc. | *Job Number:* 22-8406 |
| *Job Description:* Rice, Lauri & Rachael | |
| *Address:* FL | |

| Job Engineering Criteria: | |
|---|---|
| *Design Code:* FBC 7th Ed. 2020 Res. | *IntelliVIEW Version:* 21.02.01<br>*JRef #:* 1XJc2150014 |
| *Wind Standard:* ASCE 7-16 *Wind Speed (mph):* 130<br>*Building Type:* Closed | *Design Loading (psf):* 40.00 |

This package contains general notes pages, 4 truss drawing(s) and 3 detail(s).

| Item | Drawing Number | Truss |
|---|---|---|
| 1 | 271.22.1450.17100 | A01 |
| 3 | 271.22.1450.21667 | A03 |
| 5 | A14015ENC160118 | |
| 7 | BRCLBSUB0119 | |

| Item | Drawing Number | Truss |
|---|---|---|
| 2 | 271.22.1450.19987 | A02 |
| 4 | 271.22.1450.25077 | A04 |
| 6 | GBLLETIN0118 | |
| | | |

## General Notes

**Truss Design Engineer Scope of Work, Design Assumptions and Design Responsibilities:**
The design responsibilities assumed in the preparation of these design drawings are those specified in ANSI/TPI 1, Chapter 2; and the National Design Standard for Metal Plate Connected Wood Truss Construction, by the Truss Plate Institute. The truss component designs conform to the applicable provisions of ANSI/TPI 1 and NDS, the National Design Specification for Wood Construction by AWC. The truss component designs are based on the specified loading and dimension information furnished by others to the Truss Design Engineer. The Truss Design Engineer has no duty to independently verify the accuracy or completeness of the information provided by others and may rely on that information without liability. The responsibility for verification of that information remains with others neither employed nor controlled by the Truss Design Engineer. The Truss Design Engineer's seal and signature on the attached drawings, or cover page listing these drawings, indicates acceptance of professional engineering responsibility solely for the truss component designs and not for the technical information furnished by others which technical information and consequences thereof remain their sole responsibility.

The suitability and use of these drawings for any particular structure is the responsibility of the Building Designer in accordance with ANSI/TPI 1 Chapter 2. The Building Designer is responsible for determining that the dimensions and loads for each truss component match those required by the plans and by the actual use of the individual component, and for ascertaining that the loads shown on the drawings meet or exceed applicable building code requirements and any additional factors required in the particular application. Truss components using metal connector plates with integral teeth shall not be placed in environments that will cause the moisture content of the wood in which plates are embedded to exceed 19% and/or cause corrosion of connector plates and other metal fasteners.

The Truss Design Engineer shall not be responsible for items beyond the specific scope of the agreed contracted work set forth herein, including but not limited to: verifying the dimensions of the truss component, calculation of any of the truss component design loads, inspection of the truss components before or after installation, the design of temporary or permanent bracing and their attachment required in the roof and/or floor systems, the design of diaphragms or shear walls, the design of load transfer connections to and from diaphragms and shear walls, the design of load transfer to the foundation, the design of connections for truss components to their bearing supports, the design of the bearing supports, installation of the truss components, observation of the truss component installation process, review of truss assembly procedures, sequencing of the truss component installation, construction means and methods, site and/or worker safety in the installation of the truss components and/or its connections.

This document may be a high quality facsimile of the original engineering document which is a digitally signed electronic file with third party authentication. A wet or embossed seal copy of this engineering document is available upon request.

**Temporary Lateral Restraint and Bracing:**
Temporary lateral restraint and diagonal bracing shall be installed according to the provisions of BCSI chapters B1, B2, B7 and/or B10 (Building Component Safety Information, by TPI and SBCA), or as specified by the Building Designer or other Registered Design Professional. The required locations for lateral restraint and/or bracing depicted on these drawings are only for the permanent lateral support of the truss members to reduce buckling lengths, and do not apply to and may not be relied upon for the temporary stability of the truss components during their installation.

**Permanent Lateral Restraint and Bracing:**
The required locations for lateral restraint or bracing depicted on these drawings are for the permanent lateral support of the truss members to reduce buckling lengths. Permanent lateral support shall be installed according to the provisions of BCSI chapters B3, B7 and/or B10, or as specified by the Building Designer or other Registered Design Professional. These drawings do not depict or specify installation/erection bracing, wind bracing, portal bracing or similar building stability bracing which are parts of the overall building design to be specified, designed and detailed by the Building Designer.

**Connector Plate Information:**
Alpine connector plates are made of ASTM A653 or ASTM A1063 galvanized steel with the following designations, gauges and grades: W=Wave, 20ga, grade 40; H=High Strength, 20ga, grade 60; S=Super Strength, 18ga, grade 60. Information on model code compliance is contained in the ICC Evaluation Service report ESR-1118, available on-line at www.icc-es.org.

**Fire Retardant Treated Lumber:**
Fire retardant treated lumber must be properly re-dried and maintained below 19% or less moisture level through all stages of construction and usage. Fire retardant treated lumber may be more brittle than untreated lumber. Special handling care must be taken to prevent breakage during all handling activities.

## General Notes (continued)

**Key to Terms:**
Information provided on drawings reflects a summary of the pertinent information required for the truss design. Detailed information on load cases, reactions, member lengths, forces and members requiring permanent lateral support may be found in calculation sheets available upon written request.

BCDL = Bottom Chord standard design Dead Load in pounds per square foot.
BCLL = Bottom Chord standard design Live Load in pounds per square foot.
CL = Certified lumber.
Des Ld = total of TCLL, TCDL, BCLL and BCDL Design Load in pounds per square foot.
FRT = Fire Retardant Treated lumber.
FRT-DB = D-Blaze Fire Retardant Treated lumber.
FRT-DC = Dricon Fire Retardant Treated lumber.
FRT-FP = FirePRO Fire Retardant Treated lumber.
FRT-FL = FlamePRO Fire Retardant Treated lumber.
FRT-FT = FlameTech Fire Retardant Treated lumber.
FRT-PG = PYRO-GUARD Fire Retardant Treated lumber.
g = green lumber.
HORZ(LL) = maximum Horizontal panel point deflection due to Live Load, in inches.
HORZ(TL) = maximum Horizontal panel point long term deflection in inches, due to Total Load, including creep adjustment.
HPL = additional Horizontal Load added to a truss Piece in pounds per linear foot or pounds.
Ic = Incised lumber.
FJ = Finger Jointed lumber.
L/# = user specified divisor for limiting span/deflection ratio for evaluation of actual L/defl value.
L/defl = ratio of Length between bearings, in inches, divided by the vertical Deflection due to creep, in inches, at the referenced panel point. Reported as 999 if greater than or equal to 999.
Loc = Location, starting location of left end of bearing or panel point (joint) location of deflection.
Max BC CSI = Maximum bending and axial Combined Stress Index for Bottom Chords for of all load cases.
Max TC CSI = Maximum bending and axial Combined Stress Index for Top Chords for of all load cases.
Max Web CSI= Maximum bending and axial Combined Stress Index for Webs for of all load cases.
NCBCLL = Non-Concurrent Bottom Chord design Live Load in pounds per square foot.
PL = additional Load applied at a user specified angle on a truss Piece in pounds per linear foot or pounds.
PLB = additional vertical load added to a Bottom chord Piece of a truss in pounds per linear foot or pounds
PLT = additional vertical load added to a Top chord Piece of a truss in pounds per linear foot or pounds.
PP = Panel Point.
R = maximum downward design Reaction, in pounds, from all specified gravity load cases, at the indicated location (Loc).
-R = maximum upward design Reaction, in pounds, from all specified gravity load cases, at the identified location (Loc).
Rh = maximum horizontal design Reaction in either direction, in pounds, from all specified gravity load cases, at the indicated location (Loc).
RL = maximum horizontal design Reaction in either direction, in pounds, from all specified non-gravity (wind or seismic) load cases, at the indicated location (Loc).
Rw = maximum downward design Reaction, in pounds, from all specified non-gravity (wind or seismic) load cases, at the identified location (Loc).
TCDL = Top Chord standard design Dead Load in pounds per square foot.
TCLL = Top Chord standard design Live Load in pounds per square foot.
U = maximum Upward design reaction, in pounds, from all specified non-gravity (wind or seismic) load cases, at the indicated location (Loc).
VERT(CL) = maximum Vertical panel point deflection in inches due to Live Load and Creep Component of Dead Load in inches.
VERT(CTL) = maximum Vertical panel point deflection ratios due to Live Load and Creep Component of Dead Load, and maximum long term Vertical panel point deflection in inches due to Total load, including creep adjustment.
VERT(LL) = maximum Vertical panel point deflection in inches due to Live Load.
VERT(TL) = maximum Vertical panel point long term deflection in inches due to Total load, including creep adjustment.
W = Width of non-hanger bearing, in inches.

Refer to ASCE-7 for Wind and Seismic abbreviations.
Uppercase Acronyms not explained above are as defined in TPI 1.

**References:**


1. AWC: American Wood Council; 222 Catoctin Circle SE, Suite 201; Leesburg, VA 20175; www.awc.org.
2. ICC: International Code Council; www.iccsafe.org.
3. Alpine, a division of ITW Building Components Group Inc.: 155 Harlem Ave, North Building, 4th Floor, Glenview, IL 60025; www.alpineitw.com.
4. TPI: Truss Plate Institute, 2670 Crain Highway, Suite 203, Waldorf, MD 20601; www.tpinst.org.
5. SBCA: Wood Truss Council of America, 6300 Enterprise Lane, Madison, WI 53719; www. sbcacomponents.com.

| SEQN: 675680 GABL<br>FROM: CDM | Ply: 1<br>Qty: 2 | **Job Number:** 22-8406<br>Rice, Lauri & Rachael<br>**Truss Label:** A01 | Cust: R 215 JRef: 1XJc2150014 T5<br>DrwNo: 271.22.1450.17100<br>SSB / YK 09/28/2022 |
|---|---|---|---|

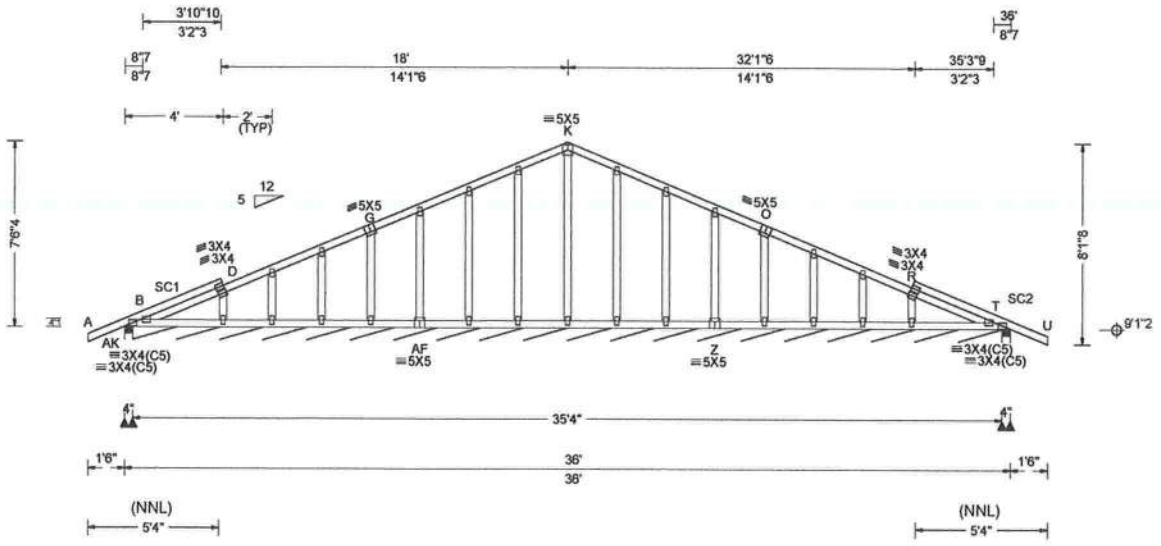


| Loading Criteria (psf) | Wind Criteria | Snow Criteria (Pg,Pf in PSF) | Defl/CSI Criteria |
|---|---|---|---|
| TCLL: 20.00<br>TCDL: 10.00<br>BCLL: 0.00<br>BCDL: 10.00<br>Des Ld: 40.00<br>NCBCLL: 10.00<br>Soffit: 2.00<br>Load Duration: 1.25<br>Spacing: 24.0 " | Wind Std: ASCE 7-16<br>Speed: 130 mph<br>Enclosure: Closed<br>Risk Category: II<br>EXP: C Kzt: NA<br>Mean Height: 15.00 ft<br>TCDL: 5.0 psf<br>BCDL: 5.0 psf<br>MWFRS Parallel Dist: 0 to h/2<br>C&C Dist a: 3.60 ft<br>Loc. from endwall: Any<br>GCpi: 0.18<br>Wind Duration: 1.60 | Pg: NA Ct: NA CAT: NA<br>Pf: NA Ce: NA<br>Lu: NA Cs: NA<br>Snow Duration: NA<br><br>Building Code:<br>FBC 7th Ed. 2020 Res.<br>TPI Std: 2014<br>Rep Fac: Yes<br>FT/RT:20(0)/10(0)<br>Plate Type(s):<br>WAVE | PP Deflection in loc L/defl L/#<br>VERT(LL): 0.001 B 999 240<br>VERT(CL): 0.004 B 999 180<br>HORZ(LL): 0.004 R - -<br>HORZ(TL): 0.005 R - -<br>Creep Factor: 2.0<br>Max TC CSI: 0.266<br>Max BC CSI: 0.063<br>Max Web CSI: 0.121<br><br>VIEW Ver: 21.02.01.1216.14 |

**▲ Maximum Reactions (lbs), or *=PLF**

| | Gravity | | | Non-Gravity | | |
|---|---|---|---|---|---|---|
| Loc | R+ | / R- | / Rh | / Rw | / U | / RL |
| AK | 299 | /- | /- | /168 | /48 | /209 |
| AK* | 72 | /- | /- | /38 | /13 | /- |
| T | 299 | /- | /- | /197 | /48 | /- |

Wind reactions based on MWFRS
AK Brg Wid = 4.0 Min Req = 1.5 (Truss)
AK Brg Wid = 424 Min Req = -
T Brg Wid = 4.0 Min Req = 1.5 (Truss)
Bearings AK, AK, & T are a rigid surface.
Members not listed have forces less than 375#

**Lumber**

Top chord: 2x4 SP #2;
Bot chord: 2x4 SP #2;
Webs: 2x4 SP #3;
Stack Chord: SC1 2x4 SP #2;
Stack Chord: SC2 2x4 SP #2;

**Plating Notes**

All plates are 2X4 except as noted.

**Loading**

Gable end supports 8" max rake overhang. Top chord must not be cut or notched.

**Wind**

Wind loads based on MWFRS with additional C&C member design.

Wind loading based on both gable and hip roof types.

**Additional Notes**

See DWGS A14015ENC160118 & GBLLETIN0118 for gable wind bracing and other requirements.

Stacked top chord must NOT be notched or cut in area (NNL). Dropped top chord braced at 24" oc intervals. Attach stacked top chord (SC) to dropped top chord in notchable area using 3x4 tie-plates 24" oc. Center plate on stacked/dropped chord interface, plate length perpendicular to chord length. Splice top chord in notchable area using 3x6.

The overall height of this truss excluding overhang is 7-6-4.

YOONHWAK KIM
LICENSE
No. 86367
STATE OF
FLORIDA
PROFESSIONAL ENGINEER

FL REG# 278, Yoonhwak Kim, FL PE #86367
Florida Certificate of Product Approval #FL 1999

****WARNING**** READ AND FOLLOW ALL NOTES ON THIS DRAWING!
****IMPORTANT**** FURNISH THIS DRAWING TO ALL CONTRACTORS INCLUDING THE INSTALLERS

Trusses require extreme care in fabricating, handling, shipping, installing and bracing. Refer to and follow the latest edition of BCSI (Building Component Safety Information, by TPI and SBCA) for safety practices prior to performing these functions. Installers shall provide temporary bracing per BCSI. Unless noted otherwise, top chord shall have properly attached structural sheathing and bottom chord shall have a properly attached rigid ceiling. Locations shown for permanent lateral restraint of webs shall have bracing installed per BCSI sections B3, B7, or B10, as applicable. Apply plates to each face of truss and position as shown above and on the Joint Details, unless noted otherwise. Refer to drawings 160A-Z for standard plate positions. Refer to job's General Notes page for additional information.

Alpine, a division of ITW Building Components Group Inc. shall not be responsible for any deviation from this drawing, any failure to build the truss in conformance with ANSI/TPI 1, or for handling, shipping, installation and bracing of trusses. A seal on this drawing or cover page listing this drawing, indicates acceptance of professional engineering responsibility solely for the design shown. The suitability and use of this drawing for any structure is the responsibility of the Building Designer per ANSI/TPI 1 Sec.2.

For more information see these web sites: Alpine: alpineitw.com; TPI: tpinst.org; SBCA: sbcacomponents.com; ICC: iccsafe.org; AWC: awc.org

ALPINE
AN ITW COMPANY
155 Harlem Ave
North Building, 4th Floor
Glenview, IL 60025

| SEQN: 675801 ATIC<br>FROM: CDM | Ply: 1<br>Qty: 24 | **Job Number:** 22-8406<br>Rice, Lauri & Rachael<br>**Truss Label:** A02 | Cust: R 215 JRef: 1XJc2150014 T1<br>DrwNo: 271.22.1450.19987<br>SSB / YK 09/28/2022 |
|---|---|---|---|

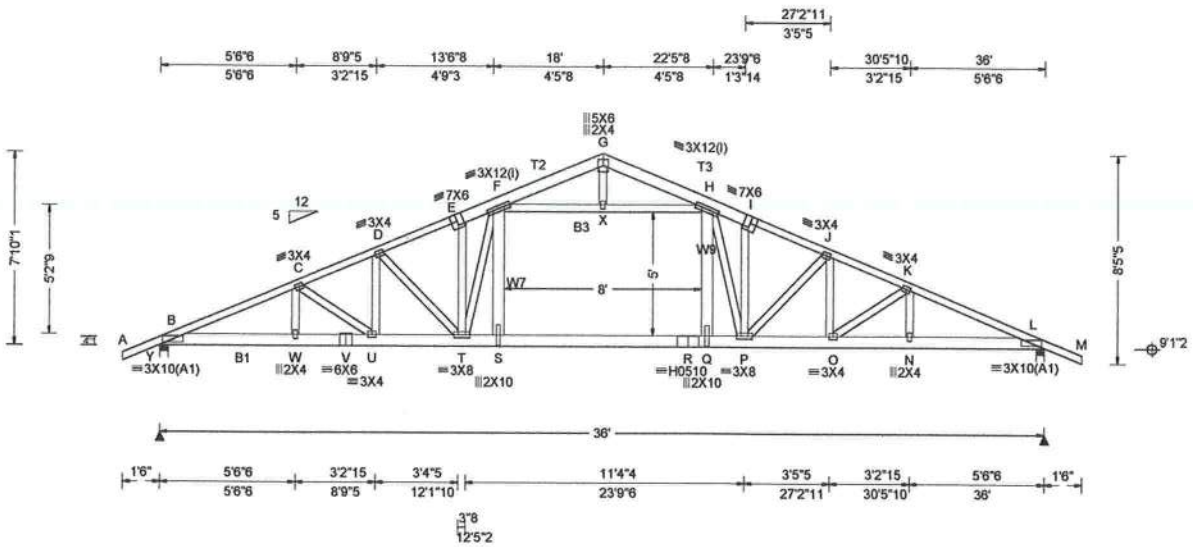


| **Loading Criteria** (psf) | **Wind Criteria** | **Snow Criteria** (Pg,Pf in PSF) | **Defl/CSI Criteria** |
|---|---|---|---|
| TCLL: 20.00 | Wind Std: ASCE 7-16 | Pg: NA Ct: NA CAT: NA | PP Deflection in loc L/defl L/# |
| TCDL: 10.00 | Speed: 130 mph | Pf: NA Ce: NA | VERT(LL): 0.234 S 999 240 |
| BCLL: 0.00 | Enclosure: Closed | Lu: NA Cs: NA | VERT(CL): 0.518 S 826 180 |
| BCDL: 10.00 | Risk Category: II | Snow Duration: NA | HORZ(LL): 0.060 L - - |
| Des Ld: 40.00 | EXP: C Kzt: NA | | HORZ(TL): 0.118 E - - |
| NCBCLL: 10.00 | Mean Height: 15.00 ft | Building Code: | Creep Factor: 2.0 |
| Soffit: 2.00 | TCDL: 5.0 psf | FBC 7th Ed. 2020 Res. | Max TC CSI: 0.601 |
| Load Duration: 1.25 | BCDL: 5.0 psf | TPI Std: 2014 | Max BC CSI: 0.836 |
| Spacing: 24.0 " | MWFRS Parallel Dist: 0 to h/2 | Rep Fac: Yes | Max Web CSI: 0.273 |
| | C&C Dist a: 3.60 ft | FT/RT:20(0)/10(0) | |
| | Loc. from endwall: Any | Plate Type(s): | |
| | GCpi: 0.18 | WAVE, HS | VIEW Ver: 21.02.01.1216.14 |
| | Wind Duration: 1.60 | | |

**▲ Maximum Reactions (lbs)**

| Loc | Gravity R+ | Gravity / R- | Gravity / Rh | Non-Gravity / Rw | Non-Gravity / U | Non-Gravity / RL |
|---|---|---|---|---|---|---|
| Y | 2156 | /- | /- | /913 | /286 | /210 |
| L | 2154 | /- | /- | /913 | /286 | /- |

Wind reactions based on MWFRS
Y Brg Wid = 4.0 Min Req = 2.5 (Truss)
L Brg Wid = 4.0 Min Req = 1.8 (Truss)
Bearings Y & L are a rigid surface.
Members not listed have forces less than 375#

**Maximum Top Chord Forces Per Ply (lbs)**

| Chords | Tens. | Comp. | Chords | Tens. | Comp. |
|---|---|---|---|---|---|
| B - C | 1297 | -4687 | G - H | 423 | -988 |
| C - D | 1246 | -4410 | H - I | 1181 | -4036 |
| D - E | 1147 | -4070 | I - J | 1149 | -4067 |
| E - F | 1178 | -4041 | J - K | 1245 | -4399 |
| F - G | 423 | -989 | K - L | 1291 | -4657 |

**Maximum Bot Chord Forces Per Ply (lbs)**

| Chords | Tens. | Comp. | Chords | Tens. | Comp. |
|---|---|---|---|---|---|
| B - W | 4276 | -1109 | R - Q | 3721 | -744 |
| W - V | 4274 | -1110 | Q - P | 3705 | -745 |
| V - U | 4274 | -1110 | P - O | 4006 | -940 |
| U - T | 4016 | -966 | O - N | 4247 | -1079 |
| T - S | 3705 | -746 | N - L | 4248 | -1077 |
| S - R | 3721 | -744 | | | |

**Maximum Web Forces Per Ply (lbs)**

| Webs | Tens. | Comp. | Webs | Tens. | Comp. |
|---|---|---|---|---|---|
| D - T | 223 | -426 | X - H | 739 | -2842 |
| T - F | 522 | -467 | Q - H | 1265 | -125 |
| F - S | 1269 | -131 | H - P | 515 | -467 |
| F - X | 739 | -2842 | P - J | 219 | -417 |

**Lumber**

Top chord: 2x4 SP #2; T2,T3 2x6 SP #2;
Bot chord: 2x6 SP 2400f-2.0E; B1 2x6 SP #2;
B3 2x4 SP #2;
Webs: 2x4 SP #3; W7,W9 2x6 SP #2;

**Plating Notes**

(I) - plates so marked were sized using 0% Fabrication Tolerance, 0 degrees Rotational Tolerance, and/or zero Positioning Tolerance.

**Loading**

Attic room loading from 14-0-0 to 22-0-0: Live Load: 40 PSF. Dead Load: 10 PSF Ceiling: 10 PSF, Kneewalls: 10 PSF

**Purlins**

Collar-tie braced with continuous lateral bracing at 24" oc. or rigid ceiling.

**Wind**

Wind loads based on MWFRS with additional C&C member design.

Wind loading based on both gable and hip roof types.

**Additional Notes**

The overall height of this truss excluding overhang is 7-10-1.

YOONHWAK KIM
LICENSE
No. 86367
STATE OF
FLORIDA
PROFESSIONAL ENGINEER

FL REG# 278, Yoonhwak Kim, FL PE #86367
Florida Certificate of Product Approval #FL 1999

****WARNING**** READ AND FOLLOW ALL NOTES ON THIS DRAWING!
****IMPORTANT**** FURNISH THIS DRAWING TO ALL CONTRACTORS INCLUDING THE INSTALLERS

Trusses require extreme care in fabricating, handling, shipping, installing and bracing. Refer to and follow the latest edition of BCSI (Building Component Safety Information, by TPI and SBCA) for safety practices prior to performing these functions. Installers shall provide temporary bracing per BCSI. Unless noted otherwise, top chord shall have properly attached structural sheathing and bottom chord shall have a properly attached rigid ceiling. Locations shown for permanent lateral restraint of webs shall have bracing installed per BCSI sections B3, B7, or B10, as applicable. Apply plates to each face of truss and position as shown above and on the Joint Details, unless noted otherwise. Refer to drawings 160A-Z for standard plate positions. Refer to job's General Notes page for additional information.

Alpine, a division of ITW Building Components Group Inc. shall not be responsible for any deviation from this drawing, any failure to build the truss in conformance with ANSI/TPI 1, or for handling, shipping, installation and bracing of trusses. A seal on this drawing or cover page listing this drawing, indicates acceptance of professional engineering responsibility solely for the design shown. The suitability and use of this drawing for any structure is the responsibility of the Building Designer per ANSI/TPI 1 Sec.2.

For more information see these web sites: Alpine: alpineitw.com; TPI: tpinst.org; SBCA: sbcacomponents.com; ICC: iccsafe.org; AWC: awc.org

ALPINE AN ITW COMPANY
155 Harlem Ave
North Building, 4th Floor
Glenview, IL 60025

| SEQN: 675675 COMN<br>FROM: CDM | Ply: 1<br>Qty: 1 | **Job Number:** 22-8406<br>Rice, Lauri & Rachael<br>**Truss Label:** A03 | Cust: R 215 JRef: 1XJc2150014 T4<br>DrwNo: 271.22.1450.21667<br>SSB / YK 09/28/2022 |
|---|---|---|---|

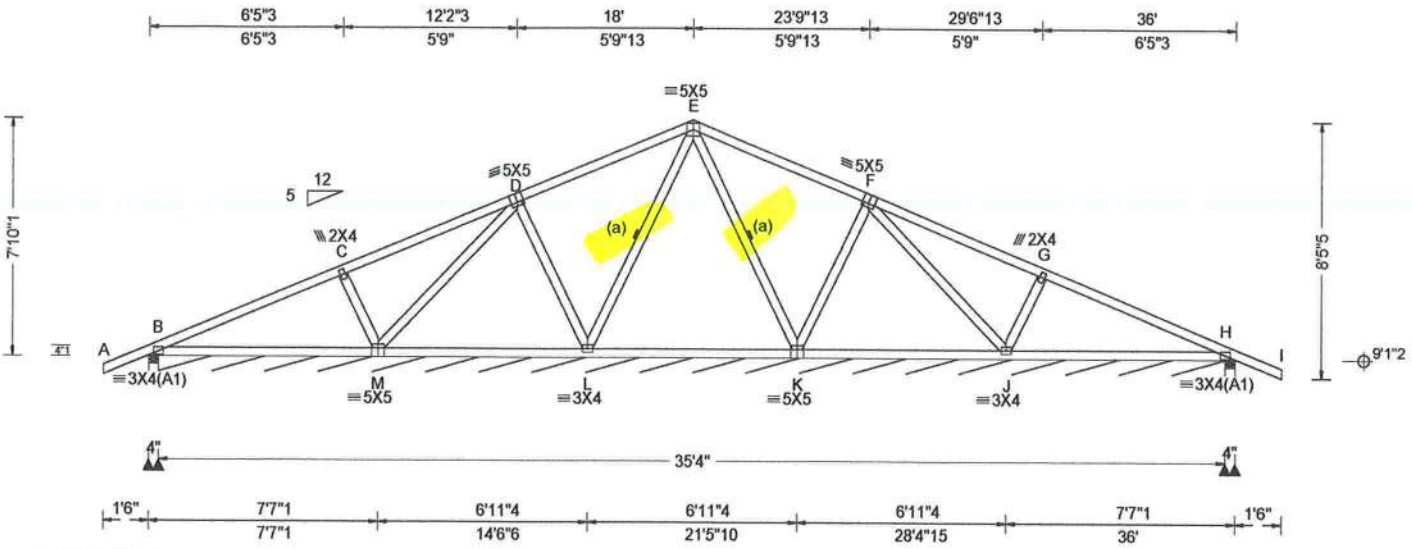


**Loading Criteria** (psf)

| | |
|---|---|
| TCLL: | 20.00 |
| TCDL: | 10.00 |
| BCLL: | 0.00 |
| BCDL: | 10.00 |
| Des Ld: | 40.00 |
| NCBCLL: | 10.00 |
| Soffit: | 2.00 |

Load Duration: 1.25
Spacing: 24.0 "

**Wind Criteria**
Wind Std: ASCE 7-16
Speed: 130 mph
Enclosure: Closed
Risk Category: II
EXP: C Kzt: NA
Mean Height: 15.00 ft
TCDL: 5.0 psf
BCDL: 5.0 psf
MWFRS Parallel Dist: h/2 to h
C&C Dist a: 3.60 ft
Loc. from endwall: not in 9.00 ft
GCpi: 0.18
Wind Duration: 1.60

**Snow Criteria** (Pg,Pf in PSF)
Pg: NA Ct: NA CAT: NA
Pf: NA Ce: NA
Lu: NA Cs: NA
Snow Duration: NA

Building Code:
FBC 7th Ed. 2020 Res.
TPI Std: 2014
Rep Fac: Yes
FT/RT:20(0)/10(0)
Plate Type(s):
WAVE

**Defl/CSI Criteria**

| PP Deflection in | loc | L/defl | L/# |
|---|---|---|---|
| VERT(LL): 0.013 | B | 999 | 240 |
| VERT(CL): 0.029 | B | 999 | 180 |
| HORZ(LL): 0.007 | B | - | - |
| HORZ(TL): 0.014 | B | - | - |

Creep Factor: 2.0
Max TC CSI: 0.429
Max BC CSI: 0.422
Max Web CSI: 0.194

VIEW Ver: 21.02.01.1216.14

**▲ Maximum Reactions (lbs), or *=PLF**

| | Gravity | | | Non-Gravity | | |
|---|---|---|---|---|---|---|
| Loc | R+ | / R- | / Rh | / Rw | / U | / RL |
| B | 419 | /- | /- | /254 | /78 | /210 |
| B* | 65 | /- | /- | /34 | /12 | /- |
| H | 418 | /- | /- | /287 | /78 | /- |

Wind reactions based on MWFRS
B Brg Wid = 4.0 Min Req = 1.5 (Truss)
B Brg Wid = 424 Min Req = -
H Brg Wid = 4.0 Min Req = 1.5 (Truss)
Bearings B, B, & H are a rigid surface.
Members not listed have forces less than 375#

**Lumber**

Top chord: 2x4 SP #2;
Bot chord: 2x4 SP #2;
Webs: 2x4 SP #3;

**Bracing**

(a) Continuous lateral restraint equally spaced on member.

**Wind**

Wind loads based on MWFRS with additional C&C member design.

Wind loading based on both gable and hip roof types.

**Additional Notes**

The overall height of this truss excluding overhang is 7-10-1.

YOONHWAK KIM
LICENSE
No. 86367
STATE OF FLORIDA
PROFESSIONAL ENGINEER

FL REG# 278, Yoonhwak Kim, FL PE #86367
Florida Certificate of Product Approval #FL 1999

****WARNING**** READ AND FOLLOW ALL NOTES ON THIS DRAWING!
****IMPORTANT**** FURNISH THIS DRAWING TO ALL CONTRACTORS INCLUDING THE INSTALLERS

Trusses require extreme care in fabricating, handling, shipping, installing and bracing. Refer to and follow the latest edition of BCSI (Building Component Safety Information, by TPI and SBCA) for safety practices prior to performing these functions. Installers shall provide temporary bracing per BCSI. Unless noted otherwise, top chord shall have properly attached structural sheathing and bottom chord shall have a properly attached rigid ceiling. Locations shown for permanent lateral restraint of webs shall have bracing installed per BCSI sections B3, B7, or B10, as applicable. Apply plates to each face of truss and position as shown above and on the Joint Details, unless noted otherwise. Refer to drawings 160A-Z for standard plate positions. Refer to job's General Notes page for additional information.

Alpine, a division of ITW Building Components Group Inc. shall not be responsible for any deviation from this drawing, any failure to build the truss in conformance with ANSI/TPI 1, or for handling, shipping, installation and bracing of trusses. A seal on this drawing or cover page listing this drawing, indicates acceptance of professional engineering responsibility solely for the design shown. The suitability and use of this drawing for any structure is the responsibility of the Building Designer per ANSI/TPI 1 Sec.2.

For more information see these web sites: Alpine: alpineitw.com; TPI: tpinst.org; SBCA: sbcacomponents.com; ICC: iccsafe.org; AWC: awc.org


ALPINE
AN ITW COMPANY
155 Harlem Ave
North Building, 4th Floor
Glenview, IL 60025

| SEQN: 675678 COMN<br>FROM: CDM | Ply: 1<br>Qty: 5 | **Job Number:** 22-8406<br>Rice, Lauri & Rachael<br>**Truss Label:** A04 | Cust: R 215 JRef: 1XJc2150014 T3<br>DrwNo: 271.22.1450.25077<br>SSB / YK 09/28/2022 |
|---|---|---|---|

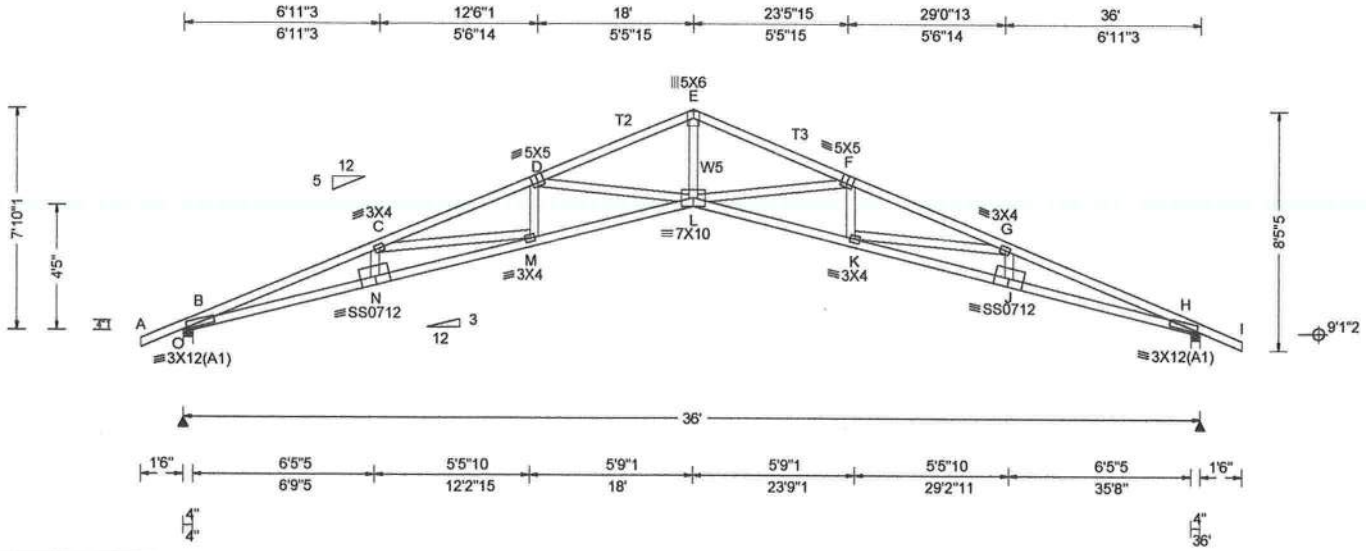


**Loading Criteria** (psf)

| | |
|---|---|
| TCLL: | 20.00 |
| TCDL: | 10.00 |
| BCLL: | 0.00 |
| BCDL: | 10.00 |
| Des Ld: | 40.00 |
| NCBCLL: | 10.00 |
| Soffit: | 2.00 |

Load Duration: 1.25
Spacing: 24.0 "

**Wind Criteria**
Wind Std: ASCE 7-16
Speed: 130 mph
Enclosure: Closed
Risk Category: II
EXP: C Kzt: NA
Mean Height: 15.00 ft
TCDL: 5.0 psf
BCDL: 5.0 psf
MWFRS Parallel Dist: 0 to h/2
C&C Dist a: 3.60 ft
Loc. from endwall: Any
GCpi: 0.18
Wind Duration: 1.60

**Snow Criteria** (Pg,Pf in PSF)
Pg: NA Ct: NA CAT: NA
Pf: NA Ce: NA
Lu: NA Cs: NA
Snow Duration: NA

Building Code:
FBC 7th Ed. 2020 Res.
TPI Std: 2014
Rep Fac: Yes
FT/RT:20(0)/10(0)
Plate Type(s):
WAVE, 18SS

**Defl/CSI Criteria**

| PP Deflection in | loc | L/defl | L/# |
|---|---|---|---|
| VERT(LL): 0.841 | L | 509 | 240 |
| VERT(CL): 1.704 | L | 251 | 180 |
| HORZ(LL): 0.550 | H | - | - |
| HORZ(TL): 1.115 | H | - | - |

Creep Factor: 2.0
Max TC CSI: 0.613
Max BC CSI: 0.747
Max Web CSI: 0.778

VIEW Ver: 21.02.01.1216.14

**▲ Maximum Reactions (lbs)**

| | Gravity | | Non-Gravity | | |
|---|---|---|---|---|---|
| Loc | R+ / R- | / Rh | / Rw | / U | / RL |
| O | 1580 /- | /- | /917 | /285 | /210 |
| H | 1580 /- | /- | /917 | /285 | /- |

Wind reactions based on MWFRS
O Brg Wid = 4.0 Min Req = 1.5 (Truss)
H Brg Wid = 4.0 Min Req = 1.5 (Truss)
Bearings O & H are a rigid surface.
Members not listed have forces less than 375#

**Maximum Top Chord Forces Per Ply (lbs)**

| Chords | Tens. | Comp. | Chords | Tens. | Comp. |
|---|---|---|---|---|---|
| B - C | 2587 | -6699 | E - F | 1767 | -4646 |
| C - D | 2320 | -5999 | F - G | 2282 | -5999 |
| D - E | 1745 | -4646 | G - H | 2563 | -6699 |

**Maximum Bot Chord Forces Per Ply (lbs)**

| Chords | Tens. | Comp. | Chords | Tens. | Comp. |
|---|---|---|---|---|---|
| B - N | 6283 | -2349 | L - K | 5641 | -1922 |
| N - M | 6312 | -2364 | K - J | 6312 | -2308 |
| M - L | 5641 | -1985 | J - H | 6283 | -2292 |

**Maximum Web Forces Per Ply (lbs)**

| Webs | Tens. | Comp. | Webs | Tens. | Comp. |
|---|---|---|---|---|---|
| C - M | 380 | -610 | L - F | 673 | -1248 |
| M - D | 389 | -52 | F - K | 389 | -51 |
| D - L | 672 | -1248 | K - G | 375 | -610 |
| E - L | 3193 | -1064 | | | |

**Lumber**

Top chord: 2x4 SP M-31; T2,T3 2x4 SP #2;
Bot chord: 2x4 SP M-31;
Webs: 2x4 SP #3; W5 2x4 SP #2;

**Wind**

Wind loads based on MWFRS with additional C&C member design.

Wind loading based on both gable and hip roof types.

**Additional Notes**

WARNING: Furnish a copy of this DWG to the installation contractor. Special care must be taken during handling, shipping and installation of trusses. See "WARNING" note below.

The overall height of this truss excluding overhang is 7-10-1.

YOONHWAK KIM
LICENSE
No. 86367
STATE OF FLORIDA
PROFESSIONAL ENGINEER

FL REG# 278, Yoonhwak Kim, FL PE #86367
Florida Certificate of Product Approval #FL 1999

****WARNING**** READ AND FOLLOW ALL NOTES ON THIS DRAWING!
****IMPORTANT**** FURNISH THIS DRAWING TO ALL CONTRACTORS INCLUDING THE INSTALLERS

Trusses require extreme care in fabricating, handling, shipping, installing and bracing. Refer to and follow the latest edition of BCSI (Building Component Safety Information, by TPI and SBCA) for safety practices prior to performing these functions. Installers shall provide temporary bracing per BCSI. Unless noted otherwise, top chord shall have properly attached structural sheathing and bottom chord shall have a properly attached rigid ceiling. Locations shown for permanent lateral restraint of webs shall have bracing installed per BCSI sections B3, B7, or B10, as applicable. Apply plates to each face of truss and position as shown above and on the Joint Details, unless noted otherwise. Refer to drawings 160A-Z for standard plate positions. Refer to job's General Notes page for additional information.

Alpine, a division of ITW Building Components Group Inc. shall not be responsible for any deviation from this drawing, any failure to build the truss in conformance with ANSI/TPI 1, or for handling, shipping, installation and bracing of trusses. A seal on this drawing or cover page listing this drawing, indicates acceptance of professional engineering responsibility solely for the design shown. The suitability and use of this drawing for any structure is the responsibility of the Building Designer per ANSI/TPI 1 Sec.2.

For more information see these web sites: Alpine: alpineitw.com; TPI: tpinst.org; SBCA: sbcacomponents.com; ICC: iccsafe.org; AWC: awc.org

ALPINE AN ITW COMPANY
155 Harlem Ave
North Building, 4th Floor
Glenview, IL 60025

# Gable Stud Reinforcement Detail

## ASCE 7-16: 140 mph Wind Speed, 15' Mean Height, Enclosed, Exposure C, Kzt = 1.00

Or: 120 mph Wind Speed, 15' Mean Height, Partially Enclosed, Exposure C, Kzt = 1.00
Or: 120 mph Wind Speed, 15' Mean Height, Enclosed, Exposure D, Kzt = 1.00
Or: 100 mph Wind Speed, 15' Mean Height, Partially Enclosed, Exposure D, Kzt = 1.00

Max Gable Vertical Length

| 2x4 Gable Vertical Spacing | Species | Brace Grade | No Braces | (1) 1x4 "L" Brace ✱ Group A | (1) 1x4 "L" Brace ✱ Group B | (1) 2x4 "L" Brace ✱ Group A | (1) 2x4 "L" Brace ✱ Group B | (2) 2x4 "L" Brace ✱✱ Group A | (2) 2x4 "L" Brace ✱✱ Group B | (1) 2x6 "L" Brace ✱ Group A | (1) 2x6 "L" Brace ✱ Group B | (2) 2x6 "L" Brace ✱✱ Group A | (2) 2x6 "L" Brace ✱✱ Group B |
|---|---|---|---|---|---|---|---|---|---|---|---|---|---|
| 24" o.c. | SPF HF | #1 / #2 | 4' 3" | 7' 3" | 7' 7" | 8' 7" | 8' 11" | 10' 3" | 10' 8" | 13' 6" | 14' 0" | 14' 0" | 14' 0" |
| | | #3 | 4' 1" | 6' 7" | 7' 1" | 8' 6" | 8' 10" | 10' 1" | 10' 6" | 13' 4" | 13' 10" | 14' 0" | 14' 0" |
| | | Stud | 4' 1" | 6' 7" | 7' 0" | 8' 6" | 8' 10" | 10' 1" | 10' 6" | 13' 4" | 13' 10" | 14' 0" | 14' 0" |
| | | Standard | 4' 1" | 5' 8" | 6' 0" | 7' 7" | 8' 1" | 10' 1" | 10' 6" | 11' 10" | 12' 8" | 14' 0" | 14' 0" |
| | SP DFL | #1 | 4' 6" | 7' 4" | 7' 8" | 8' 8" | 9' 0" | 10' 4" | 10' 9" | 13' 8" | 14' 0" | 14' 0" | 14' 0" |
| | | #2 | 4' 3" | 7' 3" | 7' 7" | 8' 7" | 8' 11" | 10' 3" | 10' 8" | 13' 6" | 14' 0" | 14' 0" | 14' 0" |
| | | #3 | 4' 2" | 6' 0" | 6' 4" | 7' 11" | 8' 6" | 10' 2" | 10' 7" | 12' 5" | 13' 4" | 14' 0" | 14' 0" |
| | | Stud | 4' 2" | 6' 0" | 6' 4" | 7' 11" | 8' 6" | 10' 2" | 10' 7" | 12' 5" | 13' 4" | 14' 0" | 14' 0" |
| | | Standard | 4' 0" | 5' 3" | 5' 7" | 7' 0" | 7' 6" | 9' 6" | 10' 2" | 11' 0" | 11' 10" | 14' 0" | 14' 0" |
| 16" o.c. | SPF HF | #1 / #2 | 4' 11" | 8' 4" | 8' 8" | 9' 10" | 10' 3" | 11' 8" | 12' 2" | 14' 0" | 14' 0" | 14' 0" | 14' 0" |
| | | #3 | 4' 8" | 8' 1" | 8' 8" | 9' 8" | 10' 1" | 11' 7" | 12' 1" | 14' 0" | 14' 0" | 14' 0" | 14' 0" |
| | | Stud | 4' 8" | 8' 1" | 8' 6" | 9' 8" | 10' 1" | 11' 7" | 12' 1" | 14' 0" | 14' 0" | 14' 0" | 14' 0" |
| | | Standard | 4' 8" | 6' 11" | 7' 5" | 9' 3" | 9' 11" | 11' 7" | 12' 1" | 14' 0" | 14' 0" | 14' 0" | 14' 0" |
| | SP DFL | #1 | 5' 1" | 8' 5" | 8' 9" | 9' 11" | 10' 4" | 11' 10" | 12' 4" | 14' 0" | 14' 0" | 14' 0" | 14' 0" |
| | | #2 | 4' 11" | 8' 4" | 8' 8" | 9' 10" | 10' 3" | 11' 8" | 12' 2" | 14' 0" | 14' 0" | 14' 0" | 14' 0" |
| | | #3 | 4' 9" | 7' 4" | 7' 9" | 9' 9" | 10' 2" | 11' 8" | 12' 1" | 14' 0" | 14' 0" | 14' 0" | 14' 0" |
| | | Stud | 4' 9" | 7' 4" | 7' 9" | 9' 9" | 10' 2" | 11' 8" | 12' 1" | 14' 0" | 14' 0" | 14' 0" | 14' 0" |
| | | Standard | 4' 8" | 6' 5" | 6' 10" | 8' 7" | 9' 2" | 11' 7" | 12' 1" | 13' 6" | 14' 0" | 14' 0" | 14' 0" |
| 12" o.c. | SPF HF | #1 / #2 | 5' 5" | 9' 2" | 9' 6" | 10' 10" | 11' 3" | 11' 8" | 13' 5" | 14' 0" | 14' 0" | 14' 0" | 14' 0" |
| | | #3 | 5' 1" | 9' 0" | 9' 4" | 10' 8" | 11' 1" | 12' 9" | 13' 3" | 14' 0" | 14' 0" | 14' 0" | 14' 0" |
| | | Stud | 5' 1" | 9' 0" | 9' 4" | 10' 8" | 11' 1" | 12' 9" | 13' 3" | 14' 0" | 14' 0" | 14' 0" | 14' 0" |
| | | Standard | 5' 1" | 8' 0" | 8' 6" | 10' 8" | 11' 1" | 12' 9" | 13' 3" | 14' 0" | 14' 0" | 14' 0" | 14' 0" |
| | SP DFL | #1 | 5' 8" | 9' 3" | 9' 8" | 10' 11" | 11' 4" | 13' 0" | 13' 6" | 14' 0" | 14' 0" | 14' 0" | 14' 0" |
| | | #2 | 5' 5" | 9' 2" | 9' 6" | 10' 10" | 11' 3" | 12' 11" | 13' 5" | 14' 0" | 14' 0" | 14' 0" | 14' 0" |
| | | #3 | 5' 3" | 8' 5" | 9' 0" | 10' 9" | 11' 2" | 12' 10" | 13' 4" | 14' 0" | 14' 0" | 14' 0" | 14' 0" |
| | | Stud | 5' 3" | 8' 5" | 9' 0" | 10' 9" | 11' 2" | 12' 10" | 13' 4" | 14' 0" | 14' 0" | 14' 0" | 14' 0" |
| | | Standard | 5' 1" | 7' 5" | 7' 11" | 9' 11" | 10' 7" | 12' 9" | 13' 3" | 14' 0" | 14' 0" | 14' 0" | 14' 0" |

### Bracing Group Species and Grades:

**Group A:**

| Spruce-Pine-Fir | | Hem-Fir | |
|---|---|---|---|
| #1 / #2 | Standard | #2 | Stud |
| #3 | Stud | #3 | Standard |

| Douglas Fir-Larch | Southern Pine✱✱✱ |
|---|---|
| #3 | #3 |
| Stud | Stud |
| Standard | Standard |

**Group B:**

| Hem-Fir |
|---|
| #1 & Btr |
| #1 |

| Douglas Fir-Larch | Southern Pine✱✱✱ |
|---|---|
| #1 | #1 |
| #2 | #2 |

1x4 Braces shall be SRB (Stress-Rated Board).

✱✱✱For 1x4 So. Pine use only Industrial 55 or Industrial 45 Stress-Rated Boards. Group B values may be used with these grades.

### Gable Truss Detail Notes:

Wind Load deflection criterion is L/240.

Provide uplift connections for 55 plf over continuous bearing (5 psf TC Dead Load).

Gable end supports load from 4' 0" outlookers with 2' 0" overhang, or 12" plywood overhang.

Attach "L" braces with 10d (0.128"x3.0" min) nails.

✱ For (1) "L" brace: space nails at 2" o.c. in 18" end zones and 4" o.c. between zones.

✱✱For (2) "L" braces: space nails at 3" o.c. in 18" end zones and 6" o.c. between zones.

"L" bracing must be a minimum of 80% of web member length.

### Gable Vertical Plate Sizes

| Vertical Length | No Splice |
|---|---|
| Less than 4' 0" | 1X4 or 2X3 |
| Greater than 4' 0" | 3X4 |

+ Refer to common truss design for peak, splice, and heel plates.

Refer to the Building Designer for conditions not addressed by this detail.

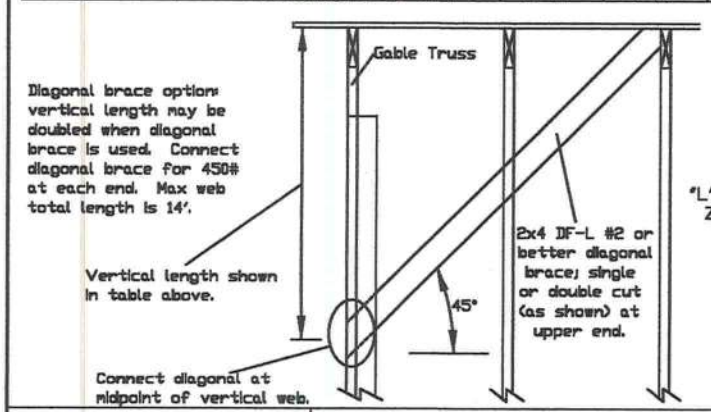


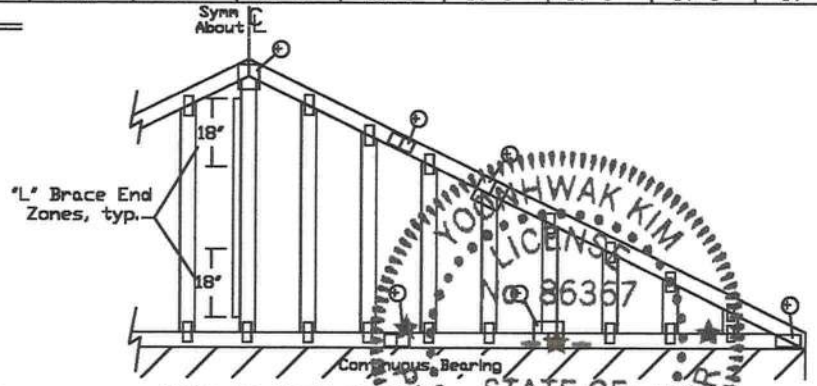


Refer to chart above for max gable vertical length.

YOONHWAK KIM LICENSE No 86367 STATE OF FLORIDA PROFESSIONAL ENGINEER

✱✱✱WARNING✱✱✱ READ AND FOLLOW ALL NOTES ON THIS DRAWING!
✱✱✱IMPORTANT✱✱✱ FURNISH THIS DRAWING TO ALL CONTRACTORS INCLUDING THE INSTALLERS.

Trusses require extreme care in fabricating, handling, shipping, installing and bracing. Refer to and follow the latest edition of BCSI (Building Component Safety Information, by TPI and SBCA) for safety practices prior to performing these functions. Installers shall provide temporary bracing per BCSI. Unless noted otherwise, top chord shall have properly attached structural sheathing and bottom chord shall have a properly attached rigid ceiling. Locations shown for permanent lateral restraint of webs shall have bracing installed per BCSI sections B3, B7 or B10, as applicable. Apply plates to each face of truss and position as shown above and on the Joint Details, unless noted otherwise. Refer to drawings 160A-Z for standard plate positions.

Alpine, a division of ITW Building Components Group Inc. shall not be responsible for any deviation from this drawing, any failure to build the truss in conformance with ANSI/TPI 1, or for handling, shipping, installation & bracing of trusses.

A seal on this drawing or cover page listing this drawing, indicates acceptance of professional engineering responsibility solely for the design shown. The suitability and use of this drawing for any structure is the responsibility of the Building Designer per ANSI/TPI 1 Sec.2.

For more information see this job's general notes page and these web sites: ALPINE) www.alpineitw.com) TPI) www.tpinst.org) SBCA) www.sbcacomponents.com) ICC) www.iccsafe.org


ALPINE AN ITW COMPANY
155 Harlem Ave
North Building, 4th Floor
Glenview, IL 60025


MAX. TOT. L.D. 60 PSF

MAX. SPACING 24.0"

| | |
|---|---|
| REF | ASCE7-16-GAB14015 |
| DATE | 01/26/2018 |
| DRWG | A14015ENC160118 |

# Gable Detail
## For Let-In Verticals

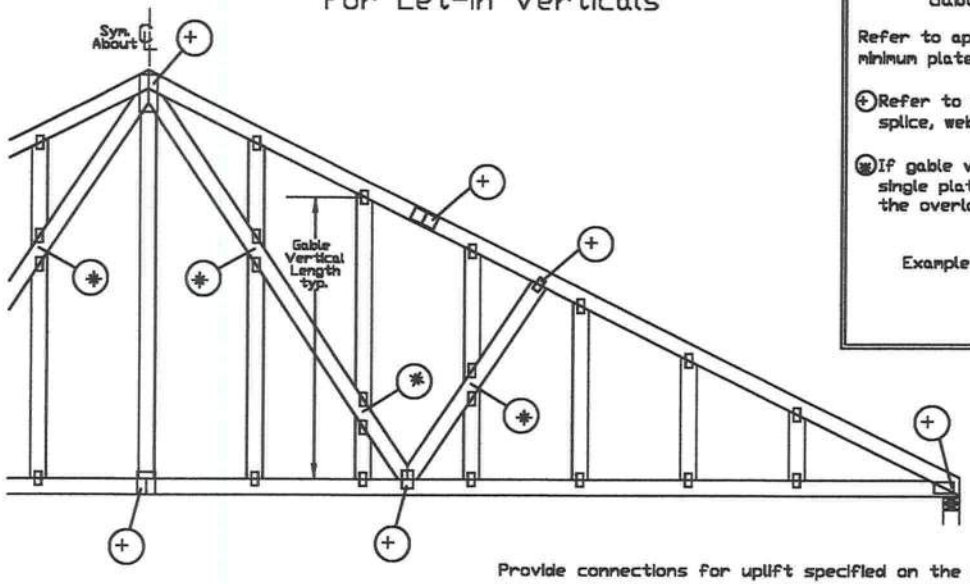


### Gable Truss Plate Sizes

Refer to appropriate Alpine gable detail for minimum plate sizes for vertical studs.

(+) Refer to Engineered truss design for peak, splice, web, and heel plates.

(*) If gable vertical plates overlap, use a single plate that covers the total area of the overlapped plates to span the web.

Example:

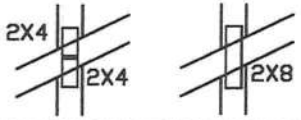


### "T" Reinforcement Attachment Detail

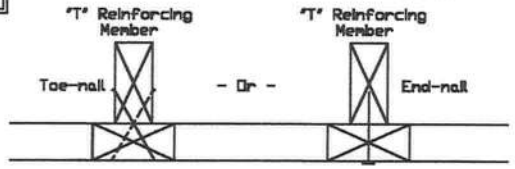


Provide connections for uplift specified on the engineered truss design.

Attach each "T" reinforcing member with

End Driven Nails:
10d Common (0.148"x 3.",min) Nails at 4" o.c. plus (4) nails in the top and bottom chords.

Toenailed Nails:
10d Common (0.148"x3",min) Toenails at 4" o.c. plus (4) toenails in the top and bottom chords.

This detail to be used with the appropriate Alpine gable detail for ASCE wind load.

ASCE 7-05 Gable Detail Drawings
A13015051014, A12015051014, A11015051014, A10015051014, A14015051014, A13030051014, A12030051014, A11030051014, A10030051014, A14030051014

ASCE 7-10 & ASCE 7-16 Gable Detail Drawings
A11515ENC100118, A12015ENC100118, A14015ENC100118, A16015ENC100118, A18015ENC100118, A20015ENC100118, A20015END100118, A20015PED100118, A11530ENC100118, A12030ENC100118, A14030ENC100118, A16030ENC100118, A18030ENC100118, A20030ENC100118, A20030END100118, A20030PED100118, S11515ENC100118, S12015ENC100118, S14015ENC100118, S16015ENC100118, S18015ENC100118, S20015ENC100118, S20015END100118, S20015PED100118, S11530ENC100118, S12030ENC100118, S14030ENC100118, S16030ENC100118, S18030ENC100118, S20030ENC100118, S20030END100118, S20030PED100118

See appropriate Alpine gable detail for maximum unreinforced gable vertical length.

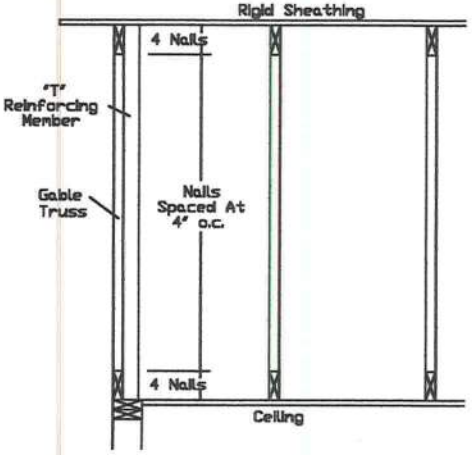


To convert from "L" to "T" reinforcing members, multiply "T" increase by length (based on appropriate Alpine gable detail).

Maximum allowable "T" reinforced gable vertical length is 14' from top to bottom chord.

"T" reinforcing member material must match size, specie, and grade of the "L" reinforcing member.

### Web Length Increase w/ "T" Brace

| "T" Reinf. Mbr. Size | "T" Increase |
|---|---|
| 2x4 | 30 % |
| 2x6 | 20 % |

Example:
ASCE 7-10 Wind Speed = 120 mph
Mean Roof Height = 30 ft, Kzt = 1.00
Gable Vertical = 24"o.c. SP #3
"T" Reinforcing Member Size = 2x4
"T" Brace Increase (From Above) = 30% = 1.30
(1) 2x4 "L" Brace Length = 8' 7"
Maximum "T" Reinforced Gable Vertical Length
1.30 x 8' 7" = 11' 2"

YOONHWAK KIM
LICENSE
No. 86367
STATE OF FLORIDA
PROFESSIONAL ENGINEER

ALPINE
AN ITW COMPANY
155 Harlem Ave
North Building, 4th Floor
Glenview, IL 60025

**WARNING READ AND FOLLOW ALL NOTES ON THIS DRAWING!**
**IMPORTANT FURNISH THIS DRAWING TO ALL CONTRACTORS INCLUDING THE INSTALLERS.**

Trusses require extreme care in fabricating, handling, shipping, installing and bracing. Refer to and follow the latest edition of BCSI (Building Component Safety Information, by TPI and SBCA) for safety practices prior to performing these functions. Installers shall provide temporary bracing per BCSI. Unless noted otherwise, top chord shall have properly attached structural sheathing and bottom chord shall have a properly attached rigid ceiling. Locations shown for permanent lateral restraint of webs shall have bracing installed per BCSI sections B3, B7 or B10, as applicable. Apply plates to each face of truss and position as shown above and on the Joint Details, unless noted otherwise. Refer to drawings 160A-Z for standard plate positions.

Alpine, a division of ITW Building Components Group Inc. shall not be responsible for any deviation from this drawing, any failure to build the truss in conformance with ANSI/TPI 1, or for handling, shipping, installation & bracing of trusses.

A seal on this drawing or cover page listing this drawing, indicates acceptance of professional engineering responsibility solely for the design shown. The suitability and use of this drawing for any structure is the responsibility of the Building Designer per ANSI/TPI 1 Sec.2.

For more information see this job's general notes page and these web sites:
ALPINE) www.alpineitw.com TPI) www.tpinst.org) SBCA) www.sbcacomponents.com ICC) www.icc-es.org

| | |
|---|---|
| REF | LET-IN VERT |
| DATE | 01/02/2018 |
| DRWG | GBLLETIN0118 |

MAX. TOT. LD. 60 PSF
DUR. FAC. ANY
MAX. SPACING 24.0"

# CLR Reinforcing Member Substitution

This detail is to be used when a Continuous Lateral Restraint (CLR) is specified on a truss design but an alternative web reinforcement method is desired.

## Notes:

This detail is only applicable for changing the specified CLR shown on single ply sealed designs to T-reinforcement or L-reinforcement or scab reinforcement.

Alternative reinforcement specified in chart below may be conservative. For minimum alternative reinforcement, re-run design with appropriate reinforcement type.

Use scabs instead of L- or T- reinforcement on webs with intersecting truss joints, such as K-web joints, that may interfere with proper application along the narrow face of the web.

| Web Member Size | Specified CLR Restraint | Alternative Reinforcement T- or L- Reinf. | Alternative Reinforcement Scab Reinf. |
|---|---|---|---|
| 2x3 or 2x4 | 1 row | 2x4 | 1-2x4 |
| 2x3 or 2x4 | 2 rows | 2x6 | 2-2x4 |
| 2x6 | 1 row | 2x4 | 1-2x6 |
| 2x6 | 2 rows | 2x6 | 2-2x4 ⊕⊕ |
| 2x8 | 1 row | 2x6 | 1-2x8 |
| 2x8 | 2 rows | 2x6 | 2-2x6 ⊕⊕ |

T-reinforcement, L-reinforcement, or scab reinforcement to be same species and grade or better than web member unless specified otherwise on Engineer's sealed design.

⊕⊕ Center scab on wide face of web. Apply (1) scab to each face of web.

## T-Reinforcement or L-Reinforcement:

Apply to either side of web narrow face. Attach with 10d (0.128"x3.0",min) nails at 6" o.c. Reinforcing member is a minimum 80% of web member length.

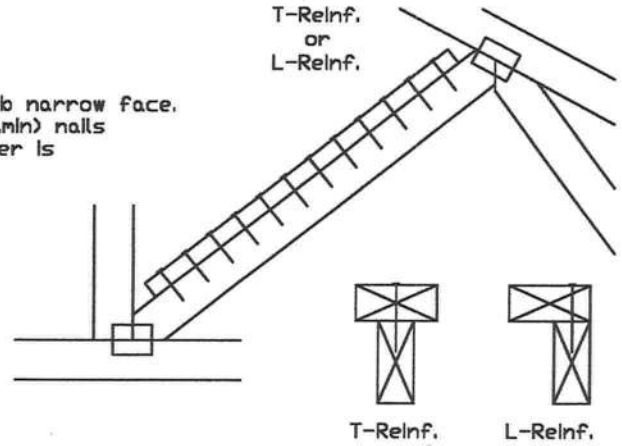


## Scab Reinforcement:

Apply scab(s) to wide face of web. No more than (1) scab per face. Attach with 10d (0.128"x3.0",min) nails at 6" o.c. Reinforcing member is a minimum 80% of web member length.

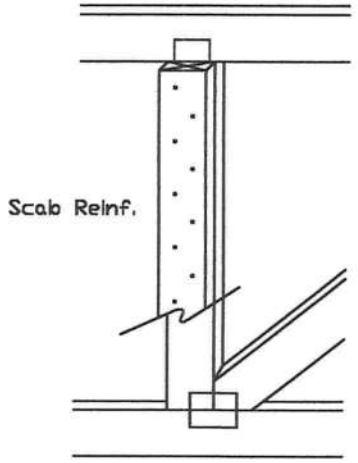


YOONHWAK KIM
LICENSE
No. 86367
STATE OF
FLORIDA
PROFESSIONAL ENGINEER


ALPINE
AN ITW COMPANY
155 Harlem Ave
North Building, 4th Floor
Glenview, IL 60025



WARNING READ AND FOLLOW ALL NOTES ON THIS DRAWING
IMPORTANT FURNISH THIS DRAWING TO ALL CONTRACTORS INCLUDING THE INSTALLERS.

Trusses require extreme care in fabricating, handling, shipping, installing and bracing. Refer to and follow the latest edition of BCSI (Building Component Safety Information, by TPI and SBCA) for safety practices prior to performing these functions. Installers shall provide temporary bracing per BCSI. Unless noted otherwise, top chord shall have properly attached structural sheathing and bottom chord shall have a properly attached rigid ceiling. Locations shown for permanent lateral restraint of webs shall have bracing installed per BCSI sections B3, B7 or B10, as applicable. Apply plates to each face of truss and position as shown above and on the Joint Details, unless noted otherwise. Refer to drawings 160A-Z for standard plate positions.

Alpine, a division of ITW Building Components Group Inc. shall not be responsible for any deviation from this drawing, any failure to build the truss in conformance with ANSI/TPI 1, or for handling, shipping, installation & bracing of trusses.

A seal on this drawing or cover page listing this drawing, indicates acceptance of professional engineering responsibility solely for the design shown. The suitability and use of this drawing for any structure is the responsibility of the Building Designer per ANSI/TPI 1 Sec2.

For more information see this job's general notes page and these web sites: ALPINE) www.alpineitw.com TPI) www.tpinst.org) SBCA) www.sbcacomponents.com ICC) www.iccsafe.org


| | | | |
|---|---|---|---|
| TC LL | PSF | REF | CLR Subst. |
| TC DL | PSF | DATE | 01/02/19 |
| BC DL | PSF | DRWG | BRCLBSUB0119 |
| BC LL | PSF | | |
| TOT. L.D. | PSF | | |
| DUR. FAC. | | | |
| SPACING | | | |

09/28/2022

Yoonhwak Kim, FL PE #86367